STD.ASME B89.7.2-ENGL 1999 ■ 0759670 0615960 538 ■

ASME B89.7.2-1999

DIMENSIONAL MEASUREMENT PLANNING

AN AMERICAN NATIONAL STANDARD



The American Society of Mechanical Engineers

Copyright ASME International
Provided by IHS under license with ASME
No reproduction or networking permitted without license from IHS
Not for Resale

STD.ASME B89.7.2-ENGL 1999 ■ 0759670 0615961 474 ■



The American Society of Mechanical Engineers

AN AMERICAN NATIONAL STANDARD

DIMENSIONAL MEASUREMENT PLANNING

ASME B89.7.2-1999

Copyright ASME International
Provided by IHS under license with ASME
No reproduction or networking permitted without license from IHS

Not for Resale

Date of Issuance: March 1, 2000

This Standard will be revised when the Society approves the issuance of a new edition. There will be no addenda issued to this edition.

ASME will issue written replies to inquiries concerning interpretation of technical aspects of this Standard. The interpretations are not part of the Standard.

ASME is the registered trademark of The American Society of Mechanical Engineers.

This code or standard was developed under procedures accredited as meeting the criteria for American National Standards. The Standards Committee that approved the code or standard was balanced to assure that individuals from competent and concerned interests have had an opportunity to participate. The proposed code or standard was made available for public review and comment that provides an opportunity for additional public input from industry, academia, regulatory agencies, and the public-at-large.

ASME does not "approve," "rate," or "endorse" any item, construction, proprietary device, or activity.

ASME does not take any position with respect to the validity of any patent rights asserted in connection with any items mentioned in this document, and does not undertake to insure anyone utilizing a standard against liability for infringement of any applicable Letters Patent, nor assumes any such liability. Users of a code or standard are expressly advised that determination of the validity of any such patent rights, and the risk of infringement of such rights, is entirely their own responsibility.

Participation by federal agency representative(s) or person(s) affiliated with industry is not to be interpreted as government or industry endorsement of this code or standard.

ASME accepts responsibility for only those interpretations of this document issued in accordance with the established ASME procedures and policies, which precludes the issuance of interpretations by individuals.

No part of this document may be reproduced in any form,
in an electronic retrieval system or otherwise,
without the prior written permission of the publisher.

The American Society of Mechanical Engineers
Three Park Avenue, New York, NY 10016-5990

Copyright © 2000 by
THE AMERICAN SOCIETY OF MECHANICAL ENGINEERS
All Rights Reserved
Printed in U.S.A.

Copyright ASME International
Provided by IHS under license with ASME
No reproduction or networking permitted without license from IHS

Not for Resale

FOREWORD

The intent of this Standard is to facilitate agreement between suppliers and customers by specifying a standard method for assessing the dimensional acceptability of workpieces. Components of the method are the preparation of an adequate dimensional measurement plan and use of the plan in making measurements. The major input to the method is dimensional specifications developed, for example, in compliance with ASME Y14.5M, Dimensioning and Tolerancing.

The first publication of Y14.5 was a significant step forward in manufacturing because it defined methods for the unambiguous expression of design intent on workpiece drawings.

Y14.5 specifies design intent in terms of workpiece features (e.g., cylinders, planes, spheres, etc.). A feature is dimensioned by specifying boundaries within which the infinite number of points in the feature surface must lie. Any adequate assessment of whether a feature complies with a Y14.5 drawing specification must consider this infinite number of points.

In the early days of Y14.5, serious attempts to determine compliance of workpiece features with drawings were based on gaging by attributes, e.g., by means of ring gages, plug gages, and functional gages. These gages dealt with the infinite number of points by means of gaging surfaces which were the ideal counterparts of the surfaces to be measured. Uncertainty due to gage errors was minimized by specifying gages that were highly accurate compared with tolerances of the parts to be measured. Gage dimensions were biased to ensure that no bad parts were accepted, even though such biasing resulted in the rejection of a few good parts.

Since the accuracy of manufacturing processes has improved more rapidly than the accuracy of gaging by attributes, the old methods have led to expensive increases in the rejection of good parts. Statistical analysis capabilities and cost effectiveness have led to the proliferation of coordinate measuring machines which cannot directly verify dimensional acceptability of the infinite number of points in a workpiece feature surface. In some instances the algorithms used to develop substitute geometries have not been adequate representations of drawing specifications. Working Group B89.3.2 (now B89.7.2) was formed to address these and related issues.

One of these issues is the criterion for acceptable dimensional measurement practice. The measurement process should be designed to balance measurement quality and cost, including the cost of incorrect decisions based on measurement results. While the analysis of costs is outside the scope of a dimensional measurement standard, the measurement process should be designed to provide the required metrological data for the analysis.

Measurement quality is defined in terms of uncertainty. Previous practice has been to assume that gaging was sufficiently accurate to ensure that uncertainty was negligible. This assumption was applied both to measurement by attributes as described above and to measurement by variables using simple bench tools, e.g., micrometers and height gages. Gage repeatability and reproducibility (GR&R) studies provide useful information relating to uncertainty, but they cannot determine uncertainty values. The ISO Guide to the Expression of Uncertainty in Measurements, 1993 (GUM) and the equivalent U.S. standard ANSI/ NCSL Z540-2, 1997 are considered the authoritative documents on the determination of uncertainty. ISO TC 213 Working Group 4 has developed two documents pertaining to

Copyright ASME International
Provided by IHS under license with ASME
No reproduction or networking permitted without license from IHS
Not for Resale

uncertainty: ISO-14253-1 Decision Rules for Proving Conformance or Non-Conformance with Specifications and ISO TR 14253-2 Guide to the Estimation of Uncertainty in GPS Measurement, in Calibration of Measuring Equipment and in Product Verification. The ASME B89.7.2 Standard makes use of the methods of the foregoing documents to determine uncertainty.

In considering its assignment, the B89.7.2 Working Group determined that a single "cookbook" standard covering all valid methods for measuring all possible workpiece features for all possible purposes under all possible conditions is impractical. Some of the problems are the difficulty of writing and maintaining such an extensive document, lack of documentation for some types of measurements, and rapidly-changing technology.

The approach of the ASME B89.7.2 Standard is to identify the principles applicable to all dimensional measurements, and to reference detailed standards for specific classes of measurements as they become available. Two strategies are used. The first is to ensure the validity of dimensional measurements by specifying requirements for preparation, approval, and use of dimensional measurement plans. The second is to provide appendices which discuss methods and resources for developing such plans.

The ASME B89.7.2 Standard considers that a measurement method is acceptable if it results in an acceptable measurement uncertainty. Thus, for example, a gage producing a limited point data set (e.g., a coordinate measuring machine) may be used to determine compliance with Y14.5 if the uncertainty component due to limited measurement can be reasonably estimated and if total uncertainty is acceptable. Acceptability may be defined by an appropriate balance between measurement quality and cost. For example, if a manufacturing process produces few bad parts, a low-quality measurement method may be adequate. For parts where an out-of-tolerance condition could cause serious injury and cost of rejecting a good part is high, the quality requirement might be stringent and the acceptable uncertainty small. These considerations may be embodied in contracts or company policies.

The body of this Standard delineates requirements and recommendations for dimensional measurement planning. Actions required for compliance with the Standard are identified by use of the word "shall." Compliance with other identified actions is strongly recommended to ensure quality in measurement. The appendices provide examples of how to develop a plan, how to select gaging, and how to estimate uncertainty contributions. Means are presented for determining the probabilities of mistakes in part acceptance. These probabilities are useful in evaluating plan acceptability. A bibliography is included. This Standard provides the user with means for meeting the requirements of ANSI/ASQC E2 Guide to Inspection Planning.

While some of the approaches of this Standard are departures from past methods, they are consistent with current state of the art, and with other standards under development including the work of ISO TC 213 Working Group 4. Another related effort is AP 219 (Application Protocol 219 – Exchange of Dimensional Inspection Information) which is part of ISO TC 184/SC4 (STEP).

It is anticipated that future work of the B89.7.2 Working Group will be in the area of updating this first edition of the Standard in response to further study, public comment, and other standards developments.

This Standard was approved by the American National Standards Institute on October 26, 1999.

Copyright ASME International
Provided by IHS under license with ASME
No reproduction or networking permitted without license from IHS
Not for Resale

ASME STANDARDS COMMITTEE B89
Dimensional Metrology

(The following is the roster of the Committee at the time of approval of this Standard.)

OFFICERS

R. B. Hook, *Chair*
F. G. Parsons, *Vice Chair*
P. Esteban, *Secretary*

COMMITTEE PERSONNEL

D. Beutel, Caterpillar Inc., Peoria, Illinois
K. L. Blaedel, University of California, Livermore, California
J. B. Bryan, Bryan Associates, Pleasanton, California
T. Carpenter, U.S. Air Force, Newark, Ohio
T. Charlton, Brown and Sharpe Manufacturing, North Kingstown, Rhode Island
P. Esteban, The American Society of Mechanical Engineeers, New York, New York
W. T. Estler, National Institute of Standards and Technology, Gaithersburg, Maryland
G. Hetland, Hutchinson Technology, Hutchinson, Minnesota
R. J. Hocken, University of North Carolina, Charlotte, North Carolina
R. B. Hook, Metcon, Coventry, Rhode Island
B. Parry, Boeing Co., Seattle, Washington
F. G. Parsons, Federal Products Co., Providence, Rhode Island
B. R. Taylor, Renishaw PLC, Gloucestershire, England
R. C. Veale, National Institute of Standards and Technology, Gaithersburg, Maryland

WORKING GROUP 7.2: DIMENSIONAL MEASUREMENT METHODS

W. Beckwith, *Chair,* Brown and Sharpe Manufacturing, North Kingstown, Rhode Island
D. Jingst, *Secretary,* Briggs & Stratton Corp., Milwaukee, Wisconsin
R. Campbell, Harper College, Palatine, Illinois
T. Carpenter, U.S. Air Force, Newark, Ohio
J. D. Cogdell, The Timken Co., Canton, Ohio
K. Harrell, Naval Warfare Assessment Division, Pomona, California
B. Hogston, Consultant
J. J. Koput, Briggs & Stratton Corp., Milwaukee, Wisconsin
T. Kurfess, Georgia Institute of Technology, Atlanta, Georgia
J. Miles, Lockheed Martin Tactical Aircraft Systems, Orlando, Florida
B. Parry, Boeing Co., Seattle, Washington
F. G. Parsons, Federal Products Corp., Providence, Rhode Island
P. G. Stein, P. G. Stein Consultants, Pennington, New Jersey
G. K. Stevenson, GKS Inspection Services, Inc., Livonia, Michigan
G. L. Vander Sande, U.S. Army Armaments Research, Development and Engineering Center, Picatinny Arsenal, New Jersey
R. C. Veale, National Institute of Standards and Technology, Gaithersburg, Maryland

Copyright ASME International
Provided by IHS under license with ASME
No reproduction or networking permitted without license from IHS
Not for Resale

CORRESPONDENCE WITH THE B89 COMMITTEE

General. ASME Codes and Standards are developed and maintained with the intent to represent the consensus of concerned interests. As such, users of this Standard may interact with the Committee by requesting interpretations, proposing revisions, and attending Committee meetings. Correspondence should be addressed to:

Secretary, B89 Main Committee
The American Society of Mechanical Engineers
Three Park Avenue
New York, NY 10016

Proposed Revisions. Revisions are made periodically to the standard to incorporate changes that appear necessary or desirable, as demonstrated by the experience gained from the application of the standard. Approved revisions will be published periodically.

The Committee welcomes proposals for revisions to this Standard. Such proposals should be as specific as possible: citing the paragraph number(s), the proposed wording, and a detailed description of the reasons for the proposal, including any pertinent documentation.

Interpretations. Upon request, the B89 Committee will render an interpretation of any requirement of the standard. Interpretations can only be rendered in response to a written request sent to the Secretary of the B89 Main Committee.

The request for interpretation should be clear and unambiguous. It is further recommended that the inquirer submit his/her request in the following format:

Subject:	Cite the applicable paragraph number(s) and provide a concise description.
Edition:	Cite the applicable edition of the standard for which the interpretation is being requested.
Question:	Phrase the question as a request for an interpretation of a specific requirement suitable for general understanding and use, not as a request for an approval of a proprietary design or situation.

Requests that are not in this format may be rewritten in the appropriate format by the Committee prior to being answered, which may inadvertently change the intent of the original request.

ASME procedures provide for reconsideration of any interpretation when or if additional information which might affect an interpretation is available. Further, persons aggrieved by an interpretation may appeal to the cognizant ASME committee or subcommittee. ASME does not "approve," "certify," "rate," or "endorse" any item, construction, proprietary device, or activity.

Attending Committee Meetings. The B89 Main Committee regularly holds meetings that are open to the public. Persons wishing to attend any meeting should contact the Secretary of the B89 Main Committee.

Copyright ASME International
Provided by IHS under license with ASME
No reproduction or networking permitted without license from IHS
Not for Resale

CONTENTS

Foreword iii
Standards Committee Roster v
Correspondence With the B89 Committee vii

1 Scope 1
1.1 Objective 1
1.2 Requirements 1
1.3 Applicability 1
1.4 Purpose 1

2 Definitions 1

3 References 2

4 Dimensional Measurement Planning 2
4.1 General 2
4.2 Prerequisites 2
4.3 Dimensional Measurement Plan 2

5 Dimensional Measurement Plan Approval 3

6 Dimensional Measurement Plan Application 3

Nonmandatory Appendices
A Sample Dimensional Measurement Plan 5
B Gage Selection 13
C Dimensional Measurement Uncertainty 17
D Probabilities of Pass and Fail Errors 23
E References 31

Copyright ASME International
Provided by IHS under license with ASME
No reproduction or networking permitted without license from IHS
Not for Resale

DIMENSIONAL MEASUREMENT PLANNING

1 SCOPE

1.1 Objective

The objective of this Standard is to ensure correctness and acceptability of dimensional measurements.

1.2 Requirements

This Standard specifies requirements for preparation and approval of dimensional measurement plans and for the use of approved plans in making dimensional measurements.

1.3 Applicability

This Standard considers that a dimensional measurement method is acceptable if its associated measurement uncertainty per the reference in Section 3 (ANSI/NCSL Standard for Expressing Uncertainty) meets business needs, e.g., cost of measurements, consequences of pass and fail errors, liability, specific policies, and customer requirements. In assessing the acceptability of an uncertainty, management should take into account the importance and difficulty of accurately quantifying uncertainty.

1.4 Purpose

This Standard is intended for use by process and quality control engineers (dimensional measurement planners) in planning manufacturing-related dimensional measurements.

2 DEFINITIONS

accept-reject measurement: a measurement made for the purpose of accepting or rejecting a workpiece or workpiece feature.

attributes gage: a gage which verifies conformance of a workpiece feature to its specification without yielding a measured value.

conforming: having a measured value lying within or on the boundary of the allowable tolerance band.

dimensional measurement: measurement of a geometric characteristic of a workpiece.

dimensional measurement plan: a plan detailing equipment and procedure for measuring one or more geometric characteristics of a workpiece or for measuring a process characteristic.

dimensional measurement planner (DMP): a person who prepares a dimensional measurement plan.

fail error: rejection, as a result of measurement error, of a geometric or process characteristic whose true value is within specified tolerances (also known as a type 1 error).

failure mode and effects analysis: for a system, the steps of listing failure modes and determining effects of failure on the system in each mode.

feature: the general term applied to a physical portion of a workpiece, such as a surface, hole, or slot (Y14.5).

gage: a real or simulated device used to associate a value or range of values with a workpiece or feature, or to verify conformance of a workpiece or feature characteristic to its specification. A gage may have either fixed or variable limits.

gaging limits: specified limits of a measured value.

geometric characteristic: a dimensional description of a feature.

lot sampling plan: a plan for choosing limited representative samples of workpieces from a lot.

manufacturing plan: a plan detailing organization, equipment, personnel, and procedures for manufacturing a workpiece.

measured value: a value obtained by measurement.

non-conforming: having a measured value lying outside the boundary of the allowable tolerance band.

pass error: acceptance, as a result of measurement error, of a geometric or process characteristic whose

Copyright ASME International
Provided by IHS under license with ASME
No reproduction or networking permitted without license from IHS
Not for Resale

true value is outside specified tolerances (also known as type 2 error).

probability of a pass or fail error: probability that a measurement results in a pass or fail error.

process: a series of actions and operations required to yield an end result (B89.5).

process characteristic: a descriptor of a process.

process control measurement: periodic limited measurement of selected workpieces or process control characteristics to detect a change in the process.

process failure: a change or changes in a process which result(s) in production of unsatisfactory workpieces.

tolerance: the total amount by which a specific characteristic is permitted by specifications to vary (Y14.5).

uncertainty (of measurements): parameter, associated with the result of a measurement, that characterizes the dispersion of the values that could reasonably be attributed to the measurand (International Vocabulary).

variables gage: a gage which yields a measured value or set of values defining a workpiece feature.

workpiece: an object to be measured (B89.4.1).

workpiece acceptance: determination that all required measured values of workpiece dimensions are within gaging limits.

3 REFERENCES

The latest issue of the following documents is implied except where workpiece specifications refer to an alternative issue.

ANSI/ASQC E2, Guide to Inspection Planning
ASME Y14.5M, Dimensioning and Tolerancing
ASME Y14.5.1M, Mathematical Definition of Dimensioning and Tolerancing Principles
ANSI/NCSL American National Standard for Expressing Uncertainty — U.S. Guide to the Expression of Uncertainty in Measurement
International Vocabulary of Basic and General Terms in Metrology, BIPM et al, 1993

Refer to Appendix E for additional references to assist the DMP in developing dimensional measurement plans.

4 DIMENSIONAL MEASUREMENT PLANNING

4.1 General

4.1.1 For each workpiece to be measured, a dimensional measurement plan shall determine and define necessary measurement tasks and shall specify their requirements.

(a) Necessary measurement tasks can be process control measurements, accept-reject measurements, or both.

(b) Each process control measurement should relate to a controllable parameter of the workpiece manufacturing process.

4.2 Prerequisites

4.2.1 Dimensional Measurement Planner. The DMP should have the requisite knowledge for adequate consideration of all applicable aspects of the dimensional measurement plan (e.g., dimensioning and tolerancing specifications, statistics, sampling plans, manufacturing plans, measurement uncertainty, etc.).

4.2.2 Drawings. The DMP shall review workpiece drawings and specifications to ensure dimensional requirements are clear, fully defined, and understood. Where these conditions are not met, the DMP shall contact those responsible for the drawings and specifications and obtain documented clarification. Interpretations shall be in accordance with specified standards and revision levels.

4.2.3 Process Characteristics. Where applicable, the DMP shall review the manufacturing plan and manufacturing process failure mode and effects analysis to determine process tendencies and requirements for prediction of potential process failure.

4.2.4 Dimensional Measurement Planning Constraints. The DMP should review acceptable probabilities of pass errors and fail errors and estimated costs of inspection and equipment.

4.2.5 Existing Equipment. The DMP should review the inventory of available gages and equipment.

4.3 Dimensional Measurement Plan

The dimensional measurement plan shall contain or reference all information needed for making measurements. Where applicable, the following considerations shall be addressed in developing the dimensional measurement plan (see Appendix A for an example).

Copyright ASME International
Provided by IHS under license with ASME
No reproduction or networking permitted without license from IHS
Not for Resale

(a) Workpiece identification (e.g., part number, revision level, serial number, description).

(b) Evaluation of characteristics and tolerances of features to be measured (from workpiece drawing, process sheet, inspection instructions, etc.).

(c) Determination of measurements to be taken (e.g., for process control, workpiece acceptance, etc.)

(d) Determination of lot sampling plan and sample analysis methods (sample size, frequency). Analysis may be controlled by contract.

(e) Determination of how measurements will be taken (e.g., on-line or off-line, attributes or variables gages, automatic or manual).

(f) Determination of measurement strategy (e.g., number and location of measured points, sequence of operations, etc.).

(g) Determination of report documentation and archival requirements (e.g., paper report, electronic data files, length of time records must be maintained, etc.).

(h) Determination of data evaluation requirements (e.g., algorithms, filters, cutoffs, graphical outputs, etc.).

(i) Selection of candidate gage for each measurement (e.g., coordinate measuring machine, special fixturing, hand-held gages, analytical equipment, etc.). See Appendix B for more information.

(j) Determination of required measurement skill and time availability.

(k) Determination of location(s) in plant where measurement(s) will be taken (e.g., workstation, inspection bench, laboratory, etc.) and gage or workpiece portability, ergonomics, workstation-related factors, and environmental effects.

(l) Determination of measurement cycle time and available time.

(m) Determination of any special user instructions and documentation requirements (e.g., setup orientation, fixturing, clamping, probing strategy, operator's manuals, etc.).

(n) Calculation of measurement uncertainty for accept-reject measurements based on determined method, procedure, and conditions. See Appendix C for more information.

(o) Calculation of the probabilities of pass errors and fail errors for accept-reject measurements based on the manufacturing process distribution and measurement uncertainty. See Appendix D for more information.

(p) Specification of gaging limits consistent with the probabilities of pass and fail errors.

(q) Determination of the disposition of workpieces (e.g., quarantine non-conforming workpieces, etc.).

(r) Review of suitability of the dimensional measurement plan and adjustment as needed to meet business needs (e.g., probabilities of pass errors and fail errors, reasonableness, practicality, applicability of results, etc.).

5 DIMENSIONAL MEASUREMENT PLAN APPROVAL

The dimensional measurement plan and plan changes shall be approved as required (e.g., by company policy or by contract, etc.).

6 DIMENSIONAL MEASUREMENT PLAN APPLICATION

6.1

Dimensional measurements shall be taken as specified in the dimensional measurement plan.

6.2

The DMP should update the dimensional measurement plan in response to part specification change, manufacturing process change, or measurement process change.

Copyright ASME International
Provided by IHS under license with ASME
No reproduction or networking permitted without license from IHS
Not for Resale

NONMANDATORY APPENDIX A
SAMPLE DIMENSIONAL MEASUREMENT PLAN

A1 PURPOSE

This Appendix discusses development of a dimensional measurement plan. A simple workpiece is used for illustration, but the same methods can be used for all workpieces.

Note that for more-complex workpieces which include both individual and related features, geometric characteristics can have a significant influence on total process uncertainty (which includes both manufacturing and measurement uncertainty). Certain geometric components of the product definition are crucial in achieving a satisfactory measurement process. Incomplete or erroneous interpretation of these design features may create an obvious bias in the resulting measurements. To limit the introduction of such bias when assembing the measurement process, particular attention should be given to the following:

(a) Specified datums and controls used to qualify these datums.

(b) The interrelationship of the datums to form a datum reference frame, including functional datum precedence and the geometric controls affecting the necessary relationships.

(c) Effects of form deviation and surface texture on the measurement of features of size.

(d) Effects of form, orientation, and other types of geometric variation on virtual condition measurements.

Often, development of a dimensional measurement plan is not a linear process. When difficulties are encountered, returning to one or more previous steps may be necessary.

A2 LOCATING PIN

A2.1 Prerequisites

By performing the following steps, the DMP ensures that the recommendations of Section 4.2 of the Standard are followed.

A2.1.1 Review and Understand Drawing. Figure A1 references ASME Y14.5M-1994. Per paras. 2.7.1.2, 4.4.2, and 6.6.4.1 of that Standard:

(a) the actual mating envelope of the pin cylindrical surface must be determined as the smallest cylinder of perfect form such that all points on the pin cylindrical surface lie on or within the cylinder

(b) diameter of the actual mating envelope must be no greater than 25 mm

(c) any actual local size of the cylindrical surface must be no less than 24.99 mm; that is, any two opposite points on the cylindrical surface must be at least 24.99 mm apart[1]

(d) all points on the left end surface must lie on or between two planes 0.5 mm apart and perpendicular to the axis of the actual mating envelope of the cylinder. Since the left end is not distinguishable from the right, the perpendicularity requirement is met if either end complies with this specification.

(e) the actual mating size of the length must be no greater than 75 mm; that is, all points on the ends of the pin must lie on or between two parallel planes 75 mm apart and nominally parallel to the pin ends

(f) the actual local size of the length must be no less than 74 mm; that is, any two opposite points on the pin ends must be at least 74 mm apart.

The DMP requests clarification on the 45 deg chamfer and is told that visual inspection is adequate. This is confirmed by a memorandum.

A2.1.2 Review Manufacturing Plan and Manufacturing Process Failure Mode and Effects Analysis. In this step probable stability of the manufacturing process, probable modes and consequences of process failure, and part quantities are identified from the manufacturing plan. This background information is useful for determining what measurements should be made and what sampling plan should be used.

The DMP determines the following to be significant:

(a) lot size is 2,500 pieces. Total production is 50,000 pieces. Production rate is 180 pieces per hour.

(b) blanks are produced on a screw machine and heat-treated. Experience indicates that distortion is within the

[1] ASME Y14.5M-1994 and ASME Y14.5.1M-1994 present different interpretations of the size specification. Since the drawing references Y14.5, the interpretation of that standard is used.

Copyright ASME International
Provided by IHS under license with ASME
No reproduction or networking permitted without license from IHS
Not for Resale

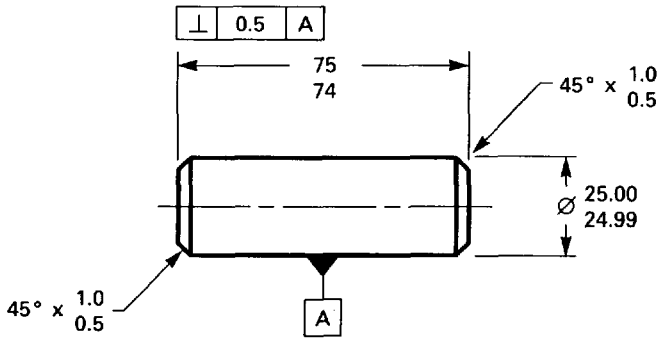

GENERAL NOTE: All dimensions are in millimeters.

FIG. A1

stock allowance for final finishing. Each piece will have cutoff projections which must be within the length tolerance.

(c) final finishing is by through-feed centerless grinding. Experience indicates this may cause lobing, but the process is stable once it is set up. Allowance must be made for lobing when planning the measurement process, see A2.2.10. Experience indicates taper will be negligible.

(d) the major process failure mode, determined from experience, is regulating wheel infeed error, which causes workpiece diameter error.

A2.1.3 Dimensional Measurement Planning Constraints. In the approach recommended by this Standard, the most common constraints are the required uncertainty, expressed as acceptable probabilities of pass and fail errors, and measurement cost. In some cases there will be other constraints. There is usually a tradeoff between uncertainty and cost. In some cases constraints will be determined by contract or provided by management. In other cases the DMP will develop the constraints and submit them with the dimensional measurement plan for approval. In this sample plan the DMP develops the constraints by the following reasoning.

The pin is used to control relative location of two parts. It is a sliding fit in each. It is to be manually assembled; thus, jamming in an assembly machine is not an issue.

If the pin is too large, it may be usable if holes in the mating parts are not at minimum acceptable size. If it is not usable, the pin is discarded and another pin is used. Cost of rejecting a good pin is small. The DMP estimates that probabilities of pass and fail errors at the large end of the tolerance interval of 1% will be acceptable and achievable. If further analysis shows these constraints cannot be met, modification of this estimate may be required.

If the pin is too small, it will not locate the parts adequately, and this condition may not be detected. At the small end of the tolerance range, probability of a pass error is set at zero and of a fail error at 2%.

Length of the pin and dimensions of the chamfers are not critical.

The DMP estimates, subject to approval, that 100% inspection will not meet cost constraints, but that funds will be available for a moderate amount of special gaging.

A2.1.4 Existing Equipment. The DMP determines that all the standard gages suitable for measuring pins are available.

A2.2 Plan Development

By performing the following steps, the DMP ensures that content of the plan follows the recommendations of para. 4.3 of the Standard.

A2.2.1 Measurements to Be Taken. The DMP verifies that length characteristics of the pin are controlled in the process for producing the blank. Thus diameter is the only characteristic to be controlled in the plan of this Appendix. Since diameter may drift during production of a lot, process control measurements will be required. Periodic accept-reject measurements also will be required for a more thorough assessment of diameter.

Copyright ASME International
Provided by IHS under license with ASME
No reproduction or networking permitted without license from IHS
Not for Resale

A2.2.2 Applicable Standards. The DMP considers the applicability of each of the following standards.

ANSI B89.3.1, Measurement of Out-of-Roundness. [This standard is not applicable because it deals with form, whereas the drawing only specifies diameter. Form is controlled by the diameter (size) specification, but not by the means discussed in B89.3.1.]

ANSI B89.6.2, Temperature and Humidity Environment for Dimensional Measurement. (The provisions of this Standard are applicable.)

ANSI/NCSL Z540-1-1994, American National Standard for Calibration — Calibration Laboratories and Measuring and Test Equipment — General Requirements. (Meeting the requirements of this standard is good practice. The DMP determines that meeting the requirements is ensured by compliance with provisions of the company gage control system.)

The foregoing is not intended as an exhaustive list of applicable standards. It is intended only as an example of how the applicability of standards is determined.

A2.2.3 Lot Sampling Plan. For process qualification the DMP determines that company policy is to run a lot of 25 pieces through the entire process and to inspect them by the workpiece acceptance method.

For process control the DMP decides that every twenty minutes a sample of five successive pins will be taken. This decision is based on an assessment of the stability of the manufacturing process.

For accept-reject measurements the DMP decides that one pin will be fully inspected each hour. Since 13.9 hr are required to run a lot, these measurements also will serve as a process audit to ensure the workpiece meets all dimensional requirements.

A2.2.4 How Measurements Will Be Taken. For process control the DMP decides to use an average and range (X-bar-R) chart. Diameter of each pin in a sample is determined as the mean of three two-point measurements, one at each end of the pin and one at mid-length. For each sample (subgroup) of five pins, the mean diameter of the subgroup and the range of the subgroup (largest minus smallest) are calculated. The mean is plotted on the X-bar portion of the chart and the range on the R-portion.

Each chart has control limit lines determined by reference to previous (historical) or current (natural) experience with this or a similar process. The relationship of the sequence of X-bar or R points to these limits determines the state of control of the process. Since there are many tests for control, they are not enumerated here. The reader is referred to any of several handbooks both for the calculation of control limits and for the interpretation of the charts.

If an out-of-control state is detected, the machine operator or other personnel refer to documented corrective action procedures to determine what to do. Usually, an adjustment to the manufacturing process can be made and this procedure is carried out.

For accept-reject measurements, the DMP determines that measurements for upper and lower limits of diameter will be taken, and pins will be visually inspected for faults. Visual inspection ensures that the entire diametral surface is ground, and that no handling damage has occurred.

A2.2.5 Select Gages. For accept-reject measurement for compliance with the actual mating size specification, the DMP chooses a ring gage the length of the part, having a diameter tolerance of +0 mm/–0.002 mm. Reference to catalogs and discussion with a gage manufacturer show this gage can be obtained at an acceptable cost. As a first guess, gage tolerance seems consistent with the chosen probabilities of pass and fail errors. Use of a full-form gage is the most reliable method for assessing compliance at the specified tolerance level.

For accept-reject measurement for compliance with the minimum diameter specification and for process control, the DMP chooses electronic indicating snap gages. Reference to catalogs shows this is the only type of gage for two-point measurement which is likely to have the repeatability and resolution needed to meet the chosen probabilities of pass and fail errors.

A2.2.6 Skill Level and Time Availability. The DMP verifies by reference to the manufacturing plan that qualified personnel will be available to make measurements.

A2.2.7 Location. The DMP determines that a station at the grinding machine will be used for process control measurements. The machine operator will take and process measurements and enter the results on the X-bar-R charts. This decision is based on cost-effectiveness. The DMP determines on the basis of experience that the machine operator is qualified to perform these functions.

The DMP determines an area in the inspection department where process qualification and accept-reject measurements will be made.

The DMP verifies workstation-related factors and ergonomics for all measurements. Environments are

Copyright ASME International
Provided by IHS under license with ASME
No reproduction or networking permitted without license from IHS Not for Resale

determined to be adequate. The main factors considered are temperature and dirt.

A2.2.8 Measurement Time. The DMP determines 12 minutes will be required to measure 5 pins, make calculations and enter results on the X-bar-R charts. Since a sample is taken every 20 min, the operator has adequate time.

A2.2.9 Uncertainty, Accept-Reject Measurements. The DMP compares the measuring tasks with the list of uncertainty sources in ISO/TR 14253-2, Section 7 and determines the following to be applicable.

Maximum material boundary	Actual local size
Temperature*	Temperature*
Contamination	Contamination
Coefficients of expansion	Coefficients of expansion
Gage tolerance*	Uncertainty of calibration*
Force	Resolution*
Geometry	Force
Operator experience	Hysteresis
	Operator experience*
	Number of measurements*

After initial study, the DMP determines the contributors marked * to be potentially significant. A contributor is significant if it affects the outcome of the standard uncertainty calculation.

Uncertainty of measurement at the maximum material boundary is determined as follows.

(a) Temperature. Heat from grinding is removed by coolant, but the shop may have temperatures as high as 30°C. Since temperature in the inspection department is controlled at 20°C ±1°C, the pin may come into the inspection department as much as 11°C warmer than the gage. By experiment, the DMP determines the time constant for the pin is 2.3 hr. Applying the step change formula of para. C5.4 shows that the pin will cool to 8.12°C above gage temperature in 30 min. This residual temperature will cause a diameter error of 2.4μm, which is 24% of the diameter tolerance. Since this error is clearly unacceptable, and since a soak time greater than 30 min will impact the usefulness of the measurement result, the DMP specifies that a cooling bath must be used in the inspection department to bring pin temperature within ±2°C of room temperature. This residual temperature difference will cause a diameter error of ±0.29 μm. Assuming a rectangular distribution, the standard uncertainty contribution is 0.17 μm. (Note that a U-shaped distribution should be used if there is a strong probability the parts will be conditioned to the minimum acceptable extent.)

(b) Gage tolerance. The gage is ordered to a tolerance of +0-2 μm. Since the gage maker's uncertainty is unknown, the DMP assumes this is the total potential variation. Since the sampling plan shows a total of 303 pieces are to be measured, wear is not a consideration. Assuming a rectangular distribution, the standard uncertainty contribution is 0.6 μm.

Consideration of the causes for the two uncertainty contributions shows they are uncorrelated. Combined standard uncertainty is

$$\sqrt{(0.17)^2 + (0.6)^2} = 0.624\ \mu m$$

and expanded uncertainty ($k = 2$) is 1.25 μm

Uncertainty of measurement of the actual local size is determined as follows.

(c) Temperature. The considerations are the same as for measurement at the maximum material condition, and the standard uncertainty contribution is 0.17 μm.

(d) Uncertainty of calibration. The DMP determines from the gage supplier that uncertainty of the master used to set the snap gage is ±0.15 μm. Uncertainty of the mastering process is estimated from experience to be ±0.25 μm. Assuming rectangular distributions, standard uncertainty contributions are 0.3 μm and 0.15 μm. A rectangular distribution is assumed as a conservative estimate because the DMP is unsure of the error distribution for such gages.

(e) Resolution. An indicator with a resolution of 0.1 μm is chosen for the snap gage. The uncertainty contribution is negligible.

(f) Operator experience. On the basis of experience, the DMP estimates a range of 1 μm. For a Gaussian distribution, the standard uncertainty contribution is 0.25 μm. A Gaussian distribution is assumed because most operators are thought to be highly experienced.

(g) Number of measurements. Anticipated form errors are an odd-lobed cross section and diameter variations along length of the pin. The cross section lobing does not affect actual local size. The DMP estimates the diameter variation bandwidth as one-third of the diameter tolerance or 3.3 μm, and undetected variation as 25% of this or 0.82 μm. Assuming a Gaussian distribution, the standard uncertainty contribution is 0.2 μm. Consideration of the causes for the uncertainty contributions shows there are no correlations. Combined standard uncertainty is

Copyright ASME International
Provided by IHS under license with ASME
No reproduction or networking permitted without license from IHS
Not for Resale

$$\sqrt{(0.17)^2 + (0.3)^2 + (0.15)^2 + (0.25)^2 + (0.2)^2} = 0.49\ \mu m$$

and expanded uncertainty ($k = 2$) is 0.99 μm.

A2.2.10 Probability, Pass and Fail Errors. The DMP determines from process history for other similar parts that a pin which just passes a ring gage will measure 2 μm smaller with a snap gage than the actual ring gage diameter. The reason is that the snap gage does not detect lobing and straightness errors. This does not affect pass-fail measurements because the snap gage is used only to check compliance with the lower limit specification, which pertains to actual local size. However for process control, a reference distribution for the X-bar and R charts must be calculated for a maximum diameter 2 μm smaller than the ring gage. Calculation of control limits is not affected.

The process distribution is controlled by feedback derived from actual process distribution measurements. When the subgroup mean snap gage reading is determined to be out of control with respect to the limits set up on the X-bar control chart, corrective action is indicated. The action taken will be according to procedure and usually will be to adjust machine infeed.

Using the method of Appendix D, the DMP determines that a process distribution centered at 24.9946 mm and having a standard deviation of 0.0018 mm, together with upper and lower gaging limits of 24.9983 mm and 24.9910 mm for actual local size will give the required probabilities of pass and fail errors. If desired, these values may be used to determine a reference distribution for the X-bar and R charts. The pass-fail snap gage is mastered at the lower gaging limit, and the ring gage is specified, based on a plus-or-minus tolerance, at the upper gaging limit plus 2 μm.

A2.2.11 Review Suitability of Plan. The DMP determines the plan to be suitable. The plan is determined practical and applicable.

A2.2.12 Document Plan. The DMP prepares a document containing at least the following:

(a) Plan Number: XXXX

(b) Dimensional Measurement Planner: Name

(c) Part and Revision Numbers: XXXX XX

(d) Part Name: Locating Pin

(e) Characteristics to Be Measured: Diameter

(f) Lot Sampling Plan

(1) Process qualification: First 25 pieces after each machine setup

(2) Process control: 5 pieces every 20 min

(3) Acceptance: 1 piece per hr

(g) Output Medium: Paper report

(h) Plant Location: Process control at grinder. Process qualification and acceptance at inspection department location XXXX.

(i) Measuring Equipment and Gages: Ring gage XXXX 25.0013 mm +0/–0.002 mm diameter by 75 mm long. Two electronic snap gages XXXX and YYYY. Master gage for accept-reject to 24.991 mm.

(j) Data Evaluation Requirements

(1) Process control: X-bar-R charts. Determine control limit lines for a process mean of 24.9946 mm and a standard deviation of 0.0018 mm. For each pin, diameter is average of three measurements, one at each end and one at mid-length. For each sample of five pins determine average diameter and plot on X-bar chart. For each sample determine largest deviation minus smallest and plot on R chart. If either plots outside control limits, call supervisor.

(2) Process qualification and acceptance: Each workpiece must pass through the ring gage. Also measure each piece at each end and at the mid-length, various rotational positions. The snap gage must not register a diameter smaller than 24.991 mm. If any workpiece fails either test, call supervisor, who will determine actions to ensure acceptable product.

(k) Uncertainties of Measurements: Coverage factor 2

(1) Ring gage 1.25 μm

(2) Snap gage 0.99 μm

(l) Probabilities of Pass and Fail Errors

(1) Upper limit pass 1%

(2) Upper limit fail 1%

(3) Lower limit pass 0

(4) Lower limit fail 2%

(m) Special Instructions: Cool parts in a liquid bath to no more than ±2°C from room temperature before measuring in the inspection department.

(n) Gaging Limits: Ring gage 25.0003 mm; snap gage 24.991 mm

(o) Disposition of Workpieces: Forward accepted workpieces with copy of inspection report to department XXXX. Mark rejected workpieces with red marker, scrap, and submit scrap report.

(p) Disposition of Report: File in file XXXX by lot number. Forward copies to YY and ZZ.

The DMP submits the plan for approval as required by company policy.

The DMP files a copy of the plan, and a record of its development which includes uncertainties, probabilities of pass and fail errors, gaging limits and other

Copyright ASME International
Provided by IHS under license with ASME
No reproduction or networking permitted without license from IHS
Not for Resale

information useful for modifying the plan for other applications.

A3 LOCATING PIN POTENTIAL PLANNING PROBLEMS

A3.1 Understanding the Drawing

In the example of Section A2, the DMP should refer to the appropriate revision of ASME Y14.5 to determine exact meaning of each specification on the drawing, and obtain help as required in understanding that Standard. If the drawing appears to be faulty (e.g., incomplete, inconsistent or not in agreement with perceived requirements), the DMP should contact the designer to obtain clarification. If the drawing is faulty, corrections should be documented e.g., by a revised drawing, memo or record of conversation. The documentation should be kept with the record of plan development. Planning always should be based on a clear specification of requirements, and never on guesses of design intent or user applications.

A3.2 Dimensional Measurement Planning Constraints

As discussed in para. A2.1.3, the DMP determined from assembly considerations, and subject to plan approval, that acceptance of oversize pins at a 1% level was permissible. If, for example, the pins are used as spare parts, acceptance of occasional oversize pins might not be permissible, and the DMP would set probability of a pass error for the ring gage measurement at zero.

A3.3 Applicable Standards

If there were a separate roundness specification in addition to the form control required by the diameter callout, ANSI B89.3.1 would be applicable, and a very different measurement procedure would be required (e.g., measurements on a precision-spindle roundness machine). Roundness measurements would be required for process qualification and possibly for accept-reject.

In the example, ANSI B89.6.2 was not applicable for process control measurements, because the part is small and temperature differences are not great. This might not be true if there is not sufficient time for soak out between grinding and measurement. A controlled air or liquid shower might be used to cool the part. Allowance for expansion might be included in the control charts. Temperature is usually a problem if parts are measured on a machine during production. For large parts it is often necessary to control temperature and soak time, because coefficients of expansion for the gage and workpiece are not exactly known. See Appendix C for more information.

A3.4 Select Gages

The DMP might conclude that a special long ring gage is too expensive, and that a standard short gage should be used. Depending on process characteristics, some measurement of straightness might be required, especially for process qualification.

A3.5 Location

If the environment for any measurement is unsatisfactory, the options are to improve the environment, to reduce sensitivity to the environment or to accept a larger uncertainty. Means of reducing sensitivity might be temperature compensation, averaging multiple measurements to reduce the effect of vibration, etc.

A3.6 Skill Level and Time Available

If the sampling interval were shorter, the grinding machine operator might not have time to take, to process and to plot the process control measurements. It might then be necessary to assign another person to do this work.

A3.7 Uncertainty

An instrument may be encountered which has a known bias; that is, it reads incorrectly by a known amount. It is recommended that measured values be corrected for known bias if the bias is significant compared with expanded uncertainty. If for economic or other reasons, it is decided not to make a correction, means for combining known bias with uncertainty are discussed in Guidelines for Expressing the Uncertainty of Measurement Results Containing Uncorrected Bias, S. D. Phillips, K. R. Eberhardt, B. Parry, NIST Journal of Research, National Institute of Standards and Technology, Gaithersburg, MD 20899, 1997.

A3.8 Probabilities, Pass and Fail Errors

If requirements for probabilities of pass and fail errors cannot be met, then either the requirements must be re-thought or the probabilities must be improved.

If one of the probabilities (pass or fail) is greater than the requirement and one less, the remedy may be to change the gaging limits. Moving the limits closer together will decrease probability of a pass error and

Copyright ASME International
Provided by IHS under license with ASME
No reproduction or networking permitted without license from IHS
Not for Resale

increase probability of a fail error. Moving them apart will have the opposite effect.

If probabilities of pass and fail errors are both too high, they can be changed by changing the measurement error distribution or manufacturing process distribution. The measurement error distribution can be changed by:

(a) using different gaging

(b) improving the environment

(c) improving skill levels.

The best approach is identified by considering the major components of uncertainty used in the uncertainty calculation. The process distribution may be changed by:

(d) using another process

(e) adjusting the process more frequently

(f) changing machine settings to center the process with tolerance limits.

A3.9 Review Suitability of Plan

If the plan is unsuitable in any respect, the element causing the unsuitability must be identified. Then it is necessary to go back to the step where that element was determined, to revise that step and to revise the following steps.

Copyright ASME International
Provided by IHS under license with ASME
No reproduction or networking permitted without license from IHS
Not for Resale

NONMANDATORY APPENDIX B
GAGE SELECTION

B1 PURPOSE

Candidate gages for a measuring task are chosen by comparing requirements of the task with capabilities of available gages. The purpose of this Appendix is to clarify such comparisons. The approach to comparison is illustrated by means of a simple example.

B2 MEASURING TASK REQUIREMENTS

B2.1 Meaning of Drawing

It is imperative that the DMP fully understand the meaning represented by each dimension of a drawing. This imperative is discussed below in terms of a specific dimension and specific gages.

Consider Fig. B1. Suppose the drawing on which the dimension of the figure appears complies with the requirements of ASME Y14.5M-1994.

Reference to Y14.5 shows that within the uncertainties discussed in Appendix C, diameter of a workpiece is within specifications if:

(a) the workpiece can pass through a ring gage having a diameter of 20.1 and a length at least as long as the workpiece; and

(b) the smallest of all possible two-point diameter measurements, obtained for example with a micrometer, is no less than 20 (see note in Appendix D Sect. A2.1.1).

For clarification, see ASME Y14.5M-1994, Fig. 2-6.

B2.2 Common Practices

Measuring instrument capabilities often do not exactly correspond to the definitions of drawing specifications. Referring to Fig. B1, some common practices are:

(a) make all diameter measurements with a micrometer

(b) check compliance with the maximum diameter specification (20.1) with a ring gage shorter than the part

(c) check compliance with the minimum diameter specification (20) with a no-go ring gage.

These practices are acceptable if the natures and probable magnitudes of form errors are known from experience or from the nature of the manufacturing process and if total uncertainties which include the effects of these form errors are acceptable.

B2.3 Form Errors

Possible form errors for the workpiece of Fig. B1 are non-circular cross section, non-straightness and non-uniform diameter along the length of the part. These are generally illustrated in Fig. B2. In the figure, a true dimension corresponding to a two-point measurement, made for example with a micrometer, is shown at 1. The smallest such dimension must be no less than 20 for the example of Fig. B1. The smallest circumscribed circle for a cross section is shown at 2. Diameter of the smallest perfect cylinder which encloses all points on the part surface, is shown at 3. True dimension 3 must be no greater than 20.1 in the example of Fig. B1.

Suppose the DMP chooses a micrometer as the only gage for diameter measurement. The consequences are as follows.

Clearly the micrometer is suitable for measuring compliance with the minimum (20.0) diameter specification if measurements are taken at all possible locations (an infinite number of measurements). Since this cannot be done, an uncertainty component is introduced which depends on the number and location of the measurements. This uncertainty component can be minimized through knowledge of the probable form errors.

If the workpiece is not straight, the micrometer cannot detect this condition, see Fig. B3. Note that a short ring gage also cannot detect the condition. In either case, an uncertainty component in determining compliance with the maximum-diameter specification is introduced.

If the workpiece cross-section is not round, the micrometer may or may not be able to detect the condition. If the cross section has an even number of lobes, for example two as shown in Fig. B4, the error will be detected and no uncertainty component is introduced. If the cross section has an odd number of lobes, for example three as shown in Fig. B5, the condition will not be detected and an uncertainty

Copyright ASME International
Provided by IHS under license with ASME
No reproduction or networking permitted without license from IHS
Not for Resale

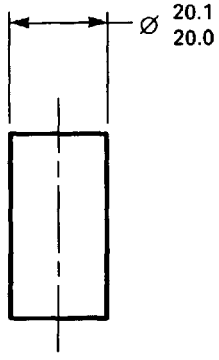

FIG. B1

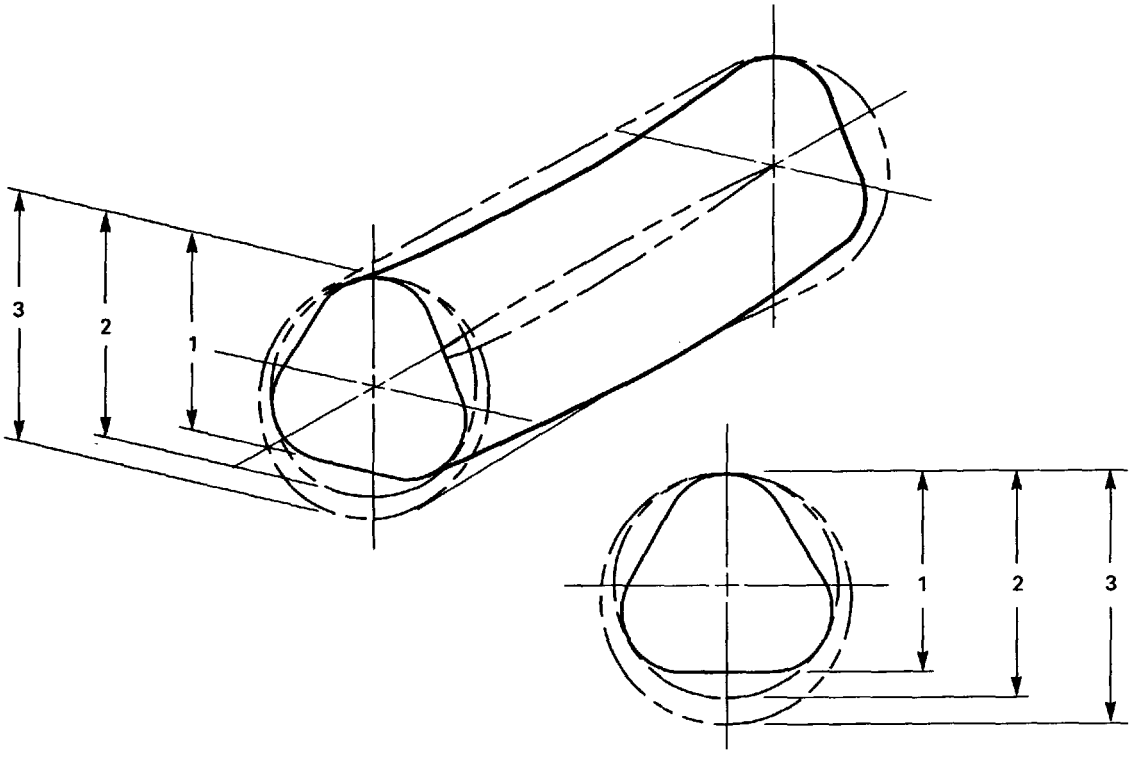

End View

FIG. B2

Copyright ASME International
Provided by IHS under license with ASME
No reproduction or networking permitted without license from IHS
Not for Resale

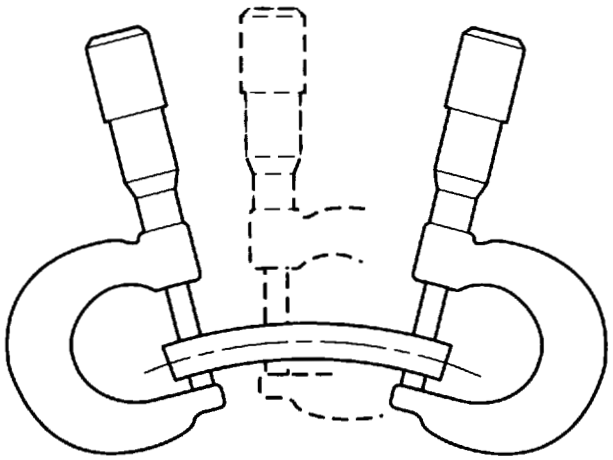

FIG. B3

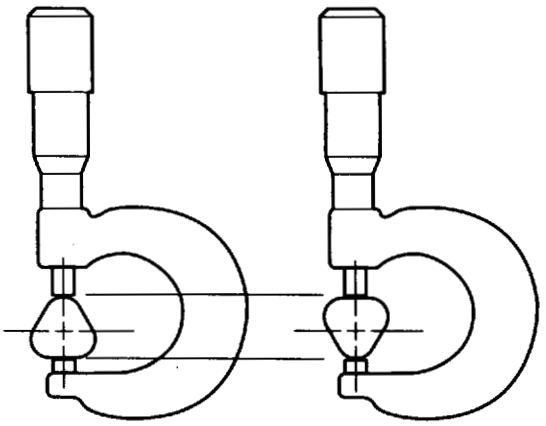

FIG. B5

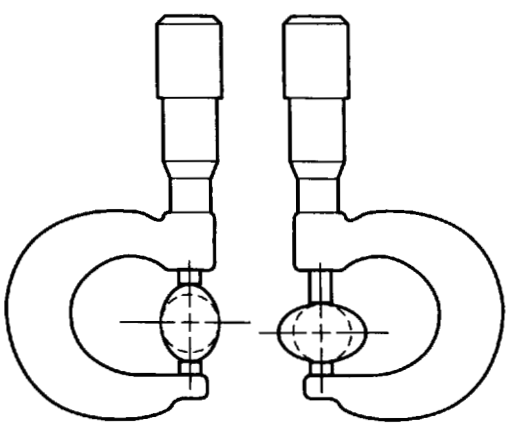

FIG. B4

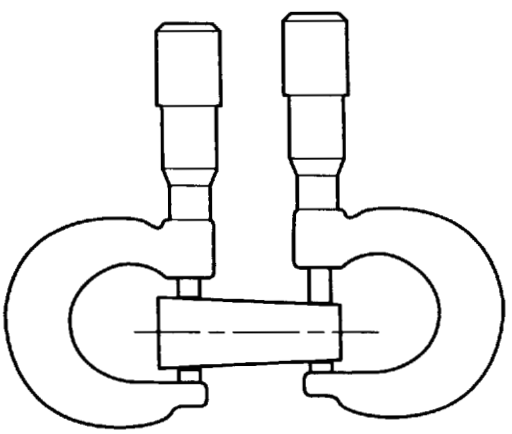

FIG. B6

Copyright ASME International
Provided by IHS under license with ASME
No reproduction or networking permitted without license from IHS
Not for Resale

component will be introduced into the determination of compliance with the maximum diameter specification.

Some workpieces have spiral lobes ("barber poling"). If the pitch of the spiral is short, such lobing may not be detected, and an uncertainty component will be introduced.

If the diameter is not uniform along length of the workpiece, for example if the workpiece is tapered as shown in Fig. B6, the condition will be detected, and no uncertainty will be introduced.

Similar analyses may be made for other types of gages and for other types of dimensions.

Copyright ASME International
Provided by IHS under license with ASME
No reproduction or networking permitted without license from IHS Not for Resale

NONMANDATORY APPENDIX C
DIMENSIONAL MEASUREMENT UNCERTAINTY

C1 PURPOSE

The purpose of this Appendix is to assist the DMP in estimating and applying measurement uncertainty.

C2 BACKGROUND

Every dimensional measurement of a workpiece is characterized by two numbers: the measured value and the uncertainty. The measured value is the result of the measurement. The true or actual value of a workpiece dimension may be somewhat different from the measured value. The largest such difference which reasonably could be expected is the uncertainty. Thus the true or actual value, which is never exactly known, reasonably can be expected to lie somewhere between the measured value minus the uncertainty, and the measured value plus the uncertainty.

It is recommended that the ANSI/NCSL reference in Section 3 of ASME B89.7.2 be used as the authoritative guide for the determination of uncertainty. A condensed version is given in NIST Technical Note 1297, Guidelines for Evaluating and Expressing the Uncertainty of NIST Measurement Results, B. Taylor and C. Kuyatt.

The general approach to estimating uncertainty is to estimate values of the significant contributions to uncertainty, then to propagate (combine) them. Sections C3 through C5 of this Appendix discuss some of the contributions frequently encountered in dimensional measurement.

C3 PROCESS-RELATED UNCERTAINTY CONTRIBUTIONS

C3.1 Dimensional Measurement Planner Related

This Section relates to discrepancies between requirements of the measurement task and characteristics of the chosen gaging method. Generally the definition of a measurand implies a gaging method. The DMP may choose a gaging method which does not comply with this principle, either because no complying gage exists (e.g., for flatness or cylindricity) or because of nontechnical factors (e.g., cost, time, availability, or skill requirement). Such choice is permissible if the resultant uncertainty is within acceptable limits.

C3.1.1 Attributes Measurements, Parts With Burrs. Attributes gaging of features with burrs can cause some otherwise-conforming parts to be rejected and some otherwise-nonconforming parts to be accepted. The DMP must determine whether burrs are to be considered dimensional characteristics. If they are not, attributes gaging does not accurately assess feature characteristics, and an uncertainty contribution must be estimated.

C3.1.2 Two-Point Measurements. As discussed in Appendix B, two-point measurements (e.g., with a snap gage, micrometer, etc.) cannot assess certain form errors. An uncertainty contribution usually can be estimated by considering the manufacturing process or previous experience.

C3.1.3 Coordinate Data Sets, Measurements Involving Form. There are three areas of difficulty in assessing form from point data sets (e.g., coordinate measuring machine measurements):

(a) estimating what happens between measured points

(b) smoothing data to remove noise associated with the measurement process

(c) dealing with invalid data (outliers).

Three approaches are discussed here.

The first approach is to fit a surface of perfect form to the data (e.g., a perfect cylinder to represent a drilled hole) by the least-squares method. This approach gives repeatable, stable results if sufficient data points are used. Since a single measured value is used to represent both the maximum material condition and actual local size, uncertainty components may be estimated by considering deviation of measured points from the fitted surface.

The second approach is to fit a surface of perfect form to the extreme points of a data set. For example

Copyright ASME International
Provided by IHS under license with ASME
No reproduction or networking permitted without license from IHS
Not for Resale

to determine compliance of a drilled hole with a maximum material condition, a cylinder of maximum diameter is fitted such that no points in the data set lie inside the cylinder. There are two obvious problems. First, if there are outliers in the data set, these are likely to be the points to which the cylinder is fitted. Second, no attempt is made to predict whether there are unmeasured points which lie inside the cylinder.

The third approach, which has not been developed or tested, is to do further work on output of the first method. Features of the third approach might be:

(a) setting aside points with unusually large deviations as possible outliers

(b) analyzing the offsets from the fitted surface for systematic content, and modeling the systematic deviations

(c) analyzing the possible outliers to determine if they represent valid data

(d) analyzing the model with systematic deviations for compliance with specifications

(e) estimating uncertainty contributions.

C3.1.4 Aliasing in Point Data Sets. Where a surface has a cyclic error, and where the surface is sampled at intervals slightly different from the cycle wave length, the data set can suggest a cyclic error very different from the actual error. The DMP must either devise a sampling plan, which avoids this problem, or allow for an uncertainty contribution where the problem is likely to occur.

C3.1.5 Workpiece Distortion. Clamping or gravity can distort a workpiece. If this problem cannot be avoided an uncertainty contribution must be assigned.

C3.2 Measuring-Person-Related

The measuring person should check gages and test setups for stability and proper functioning, read gage outputs accurately and objectively, and generally avoid problems associated with accuracy of measurements. Particular attention should be given to avoiding parallax errors, applying proper forces, etc. An uncertainty contribution may be set to account for variations in skill level.

C4 GAGE-RELATED UNCERTAINTY CONTRIBUTIONS

C4.1 Attribute Gages

The uncertainty contribution for the gage is usually determined from the supplier's specifications or from calibration data. Condition of a gage relative to its condition at last calibration will affect uncertainty.

Where mastering of a gage is required, the uncertainty contributions of the master and of the mastering process must be estimated.

C4.2 Variables Gages

C4.2.1 Single-Dimension Gages. This classification includes micrometers, vernier and electronic calipers, height gages, air gages, distance-measuring interferometers, etc. Basic uncertainty contributions should be given in manufacturer's specifications and in calibration reports. Where mastering is required, resolution affects the uncertainty components of both mastering and measuring. Wear and corrosion of masters can cause additional uncertainty contributions.

C4.2.2 Multi-Dimensional Gages. This classification pertains to coordinate measuring machines and other gaging systems, which produce point data sets.

Assessing the measurement uncertainty components of such systems is an area under active development. At least three approaches are being taken.

The first approach is the comparator principle. A calibrated master artifact similar to the workpiece is measured by the gaging system. Differences between measurements and calibration are taken as the uncertainty contributions when the workpiece is measured.

The second approach is virtual measuring system. A mathematical model is developed such that measurement errors may be calculated in terms of measured parametric errors (linear displacement error, straightness, yaw, pitch and roll). Calculated measurement errors are combined with probing and dynamic errors to determine uncertainty contributions. The virtual measuring system approach may be used to establish traceability in calibration of artifacts used with the comparator principle.

The third approach is estimation of uncertainty contributions from data recorded during system performance tests. Performance tests are designed for sensitivity to the system characteristics which cause uncertainty; thus, in principle, uncertainty contributions can be determined by working backward from test results. Repeatability and reproducibility test results can be part of this process. The general process is to relate each workpiece measurement to a similar performance test measurement, and to adjust performance test results for differences between the workpiece and performance measurements.

Copyright ASME International
Provided by IHS under license with ASME
No reproduction or networking permitted without license from IHS Not for Resale

C5 ENVIRONMENT-RELATED UNCERTAINTY CONTRIBUTIONS

C5.1 General

For measurements of small workpieces with moderate tolerances under reasonable conditions, the environmental uncertainty contribution is negligible. For large gages and workpieces, or for small workpieces made to tight tolerances, environmental uncertainty contributions can be significant. The following discussion pertains to such cases.

C5.2 Temperature

The effects of temperature are discussed in detail in ANSI B89.6.2, Temperature and Humidity Environment for Dimensional Measurement. However, since the objectives of B89.6.2 and B89.7.2 are different, some interpretation is necessary. For example B89.6.2 uses the thermal error index as a means for judging acceptability of a thermal uncertainty, while B89.7.2 recommends combination with other uncertainty contributions and determination of pass and fail error probabilities.

By international agreement dimensions and forms of parts are defined at a temperature of 20°C. Thus if both the gage and workpiece are at exactly 20°C there is no temperature-caused measurement uncertainty. Usually it is impractical to adequately approximate this condition. For other conditions one must consider the effects of thermal expansions on the gage and workpiece.

C5.3 Constant Temperature

If the gage and workpiece are at a uniform temperature other than 20°C, each will expand by an amount:

$$\alpha L(T - 20)$$

where

α = coefficient of thermal expansion (CTE)
L = length
T = temperature, °C

If the gage and workpiece have exactly the same CTE and temperature, they will expand exactly the same amount, and the temperature-caused measurement bias will be zero.

If the gage and workpiece have different coefficients of expansion or different temperatures, and if corrections are not applied to compensate for the difference, the measurement bias due to thermal effects will be the difference in expansion over length L.

Coefficients of thermal expansion often vary somewhat from nominal values. Typical maximum variation is 10% of the CTE. If the gage and workpiece have the same nominal CTE and the same temperature, this causes two measurement uncertainty contributions of

$$(0.1\alpha)\ (L)\ (T - 20)$$

If they have nominally different coefficients of thermal expansion, these uncertainty contributions must be combined with the uncertainty contribution caused by the different nominal coefficients of thermal expansion.

If the gage or workpiece is made up of two or more components having different coefficients of thermal expansion, the structure must be carefully analyzed to determine if there will be an additional uncertainty contribution due to bending or twisting.

C5.4 Slowly-Changing Temperature

Since temperature change in a body is caused by heat flow and heat flow is caused by temperature gradients, temperature change is always accompanied by temperature gradients. A slow temperature change is a change for which gradients are small, and expansions are approximately the same as though temperature in the body is uniform at all points at a particular time. Situations where temperature change is slow are characterized by one or more of the following:

(a) slow air temperature variation
(b) high conductivity
(c) short heat flow paths
(d) low specific heat
(e) low density
(f) low heat transfer to air.

The following equations are approximations for determining workpiece and gage temperatures when temperature change is slow.

If ambient air and the workpiece are initially at the same temperature, and if a step change in air temperature occurs, e.g., the workpiece is moved to another location, temperature of the gage or workpiece at some later time will be:

$$T = T_a\ (1 - e^{-t/\tau})$$

where

T = temperature of gage or workpiece relative to temperature before the step change
T_a = amount of step change
t = time from step change

Copyright ASME International
Provided by IHS under license with ASME
No reproduction or networking permitted without license from IHS
Not for Resale

τ = time constant

τ can be determined experimentally as time for the gage or workpiece temperature T to reach 63.2% of T_a in response to a step change.

If the gage or workpiece is exposed for a long period of time to a harmonic air temperature cycle

$$T_a = T_c \cos (2\pi\, t/t_c)$$

where

T_a = air temperature relative to mean
T_c = maximum T_a
t = time from the instant when $T_a = T_c$
t_c = time for one cycle

then temperaturte of the gage or workpiece will be

$$T = \frac{T_c/\tau}{1/\tau^2 + (2\pi/t_c)^2}\left(\frac{1}{\tau}\cos\left[2\pi t/t_c\right] + \frac{2\pi}{t_c}\sin\left[2\pi t/t_c\right]\right)$$

where

T = gage or workpiece temperature relative to mean

For either case, temperature of the gage and workpiece can be calculated separately for various times, and the maximum temperature difference can be determined. Measurement uncertainty, including the effects of nominal coefficients of thermal expansion and the uncertainties of the coefficients, is calculated as in the constant temperature case. Results can be judgmentally modified to account for differences between the actual temperature pattern and the pattern of the equation.

Thermal response to air temperature changes can be modified by conduction. Consider for example a gage or workpiece on a surface plate. If the surface plate is relatively massive, its temperature changes due to air temperature variation will be relatively small. Thus conduction between the surface plate and gage or workpiece will tend to stabilize temperature of the gage or workpiece. This can cause temperature difference between the gage and workpiece either to increase or to decrease, depending on whether the two effects are very different or nearly the same.

Convective heat flow is usually predominant. Thus temperature should usually be calculated from one of the above equations. The result then should be modified judgmentally for the effect of conduction and for the effect of radiation as discussed in Section C5.6.

C5.5 Rapidly-Changing Temperature

If small, rapid air temperature fluctuations occur, for example due to air conditioning, and if the gage and workpiece are relatively massive, effect of the fluctuation may be negligible. This is because not enough heat flows into and out of the gage and workpiece to cause significant internal temperature changes. The equations for slow temperature change can be used in judging whether there is a significant effect.

Large, rapid air temperature changes can cause temperature gradients in the gage and workpiece. These can cause bending and twisting. If the situation cannot be avoided, the uncertainty contribution must be predicted on the basis of analysis or experience.

C5.6 Other Temperature Effects

Radiant energy can be a significant cause of measurement uncertainty with large gages and workpieces. The major sources of radiant energy are sunlight and artificial lighting. It is good practice to minimize radiant effects before estimating their uncertainty contributions. Because of its strength and variability, sunlight should be avoided. For artificial lighting, radiant energy outside the visible spectrum should be minimized. Indirect lighting is often effective. Lighting should be as uniform as possible to prevent uneven heating of the gage and workpiece. Estimates of uncertainty contributions must be based on experience. Typically, radiant energy can cause temperature differences of a fraction of a degree in different parts of a gage or workpiece. Perhaps the most prevalent problem caused by radiant energy is change in flatness of large surface plates.

A major cause of thermal uncertainty contributions is measurement of workpieces that have not been thermally stabilized (soaked) in the inspection environment. Uncertainty contributions can be estimated by using the step change equation of Section C5.4.

Air from a heating or cooling duct blowing intermittently on a gage or workpiece can cause major uncertainty contributions. The effect is larger than might be expected because high velocity of the air increases the heat transfer coefficient. It is usually easier to eliminate this problem than to estimate its effect.

A frequently-encountered problem is heating of a gage or workpiece due to handling. This topic falls more under the heading of good metrology practice than thermal uncertainty.

Spatial variations of air temperature can cause uncertainties in large gages or workpieces. Effects may be predicted by means of simple mathematical models, judgment, and experience.

Copyright ASME International
Provided by IHS under license with ASME
No reproduction or networking permitted without license from IHS
Not for Resale

In some optical gaging systems the effect of air temperature, pressure, and composition on air index of refraction is important. Methods for estimating uncertainty contributions may be determined from the gage manufacturer's literature.

In gages having hydrostatic air bearings, two problems may arise. First, variation of supply air temperature may cause variation of gage temperature. This variation easily is avoided by ensuring sufficient length of air line in the measuring room to ensure the supply air comes to room temperature. The second problem is that throttling of air through the bearings causes local cooling of the gage. The effects of this are allowed for in the gage performance specifications.

C5.7 Vibration

The characteristic of vibration, which causes uncertainty contributions, is relative motion between the gage sensing or contacting element and the measured point on the workpiece. In what follows, this relative motion is referred to simply as vibration. Uncertainty contributions occur, for example, in some coordinate measuring machines, because a "snapshot" recording of a measurement may be made at any instant in time. For probing systems such as typical LVDT gage heads, which have an averaging characteristic, the uncertainty contribution due to vibration is usually negligible.

C5.8 Other Effects

While temperature and vibration are usually the major causes of environmental uncertainty contributions, the measurement task should be reviewed to see if other effects are important contributions. Examples are magnetic fields, gravity, acoustic noise, electronic drift, barometric pressure, humidity, electromagnetic interference, and contamination (e.g., dirt, oil, etc.).

C6 APPLICATION OF UNCERTAINTY

As an example, consider a length-measurement task where a nominal length and a symmetrical bilateral (plus or minus) tolerance are given. A workpiece having a true dimension outside the tolerance band is nonconforming. Expanded uncertainty has been determined as discussed in the previous sections.

If, as shown in Fig. C1, the lower gaging limit is set at nominal length minus half the tolerance plus uncertainty, and the upper gaging limit at nominal length plus half the tolerance minus uncertainty, the true dimensions of all accepted workpieces will lie within the tolerance boundary and all such workpieces will be conforming. However the measured dimensions of some conforming workpieces will lie outside the gaging limits, and these conforming workpieces will be rejected.

If, as shown in Fig. C2, the lower gaging limit is set at nominal length minus half the tolerance minus uncertainty, and the upper gaging limit at nominal length plus half the tolerance plus uncertainty, all workpieces which measure outside the gaging limits will be non-conforming. However some non-conforming workpieces which lie outside the tolerance zone but within gaging limits will be accepted.

Gaging limits are set at one of these two conditions, or somewhere between, depending on acceptable probabilities of pass and fail errors.

Probabilities of pass and fail errors are calculated as discussed in Appendix D. If results are unsatisfactory, new gaging limits are chosen or steps are taken to change the measurement uncertainty or process distribution.

Copyright ASME International
Provided by IHS under license with ASME
No reproduction or networking permitted without license from IHS
Not for Resale

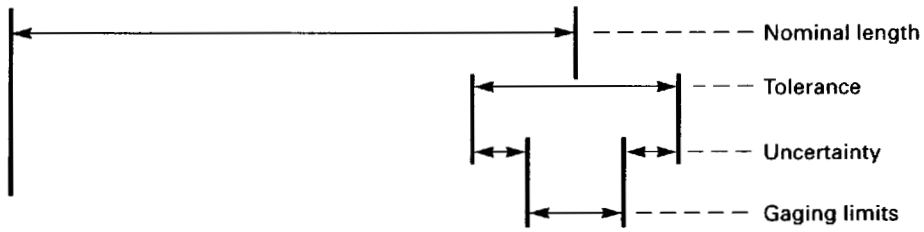

FIG. C1

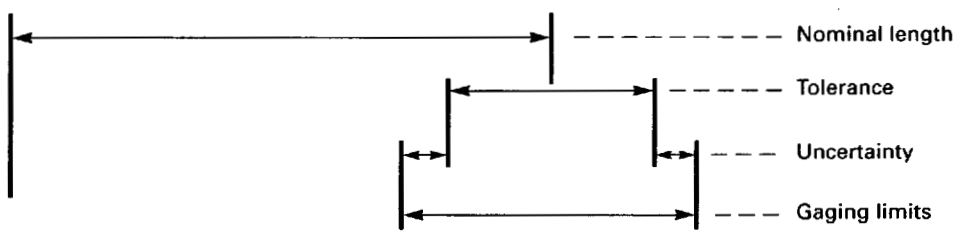

FIG. C2

Copyright ASME International
Provided by IHS under license with ASME
No reproduction or networking permitted without license from IHS Not for Resale

NONMANDATORY APPENDIX D
PROBABILITIES OF PASS AND FAIL ERRORS

D1 INTRODUCTION

This Appendix concerns dimensional measurement of workpiece features. Every measurement has an associated uncertainty. Thus near the limits of acceptability it is not possible to determine unequivocally whether a workpiece feature is conforming or nonconforming. In this circumstance, when a decision is made to accept or reject a workpiece, there is a possibility of a wrong decision (a pass or fail error). This Appendix presents algorithms for determining the probabilities of such wrong decisions.

Two cases are considered: two-sided measurements such as length which can fail because they are either too large or too small, and one-sided measurements such as form (e.g., flatness, cylindricity, sphericity) which can fail only when they are too large.

Due to the many possible relationships between measured value, tolerance, gaging limits, measurement uncertainty, and process distribution, determination of the probabilities of pass and fail errors is complicated. Any suitable algorithm must be based on assumptions which are in reasonable agreement with characteristics of the measurement situation. Sections D2 through D5 discuss these characteristics for the purpose of guidance in applying or modifying the algorithms. Sections D6 through D9 present the algorithms. Section D10 discusses the combining of probabilities.

D2 TOLERANCE

A concept of this Appendix is that a dimension that is within tolerance is conforming, and a dimension that is out of tolerance is non-conforming. The conforming and non-conforming designations are used with respect to the definitions of pass and fail errors. Tolerances complying with this concept may or may not be the drawing tolerances.

D3 MEASUREMENT ERROR DISTRIBUTION

The result of a measurement is described by a measured value and an error distribution. The error distribution is the distribution of probable differences between the measured value and the true value of the measurand.

For many types of measurements, the measurement error distribution may be represented by a Gaussian (bell-shaped) curve. The curve has a maximum height at the measured value, which indicates the true value is more likely to be near the measured value than near the ends of the distribution.

Other error distributions are possible. For example if measurement errors are caused by low-frequency vibration of the gage relative to the workpiece, most of the measurement errors will be near the ends of the uncertainty distribution because the gage spends more time there, and the curve will have a low point near the measured value.

D4 PROCESS DISTRIBUTION

Process distribution is the distribution of actual dimensions resulting from the manufacturing process. In many cases it may be represented by a Gaussian curve. A rectangular distribution may be used to represent a uniformly-changing, periodically-adjusted variation caused, for example, by tool wear.

D5 GAGING LIMITS

When a workpiece dimension is measured, the dimension is accepted if the measured value is within the gaging limits and rejected if it is outside the gaging limits.

The DMP may change the gaging limits to adjust probabilities of pass and fail errors. Bringing the gaging limits in toward the nominal dimension decreases probability of a pass error (passing a non-conforming part) and increases probability of a fail error (failing a conforming part). Moving the gaging limits out has the opposite effect.

A common requirement is that probability of a pass error be zero: that is, that all passed parts be conforming. To achieve this the gaging limits are set no farther from the nominal dimension than half the tolerance minus the expanded uncertainty. If this leads to an

Copyright ASME International
Provided by IHS under license with ASME
No reproduction or networking permitted without license from IHS
Not for Resale

excessive number of fail errors, it may be necessary to improve the measurement process to reduce the uncertainty or to accept a compromise.

In some cases, accepting some pass errors may be cost-effective. A common practice is to tolerance mating shafts and holes so a shaft at maximum tolerance will fit a hole at minimum tolerance. Obviously, certain combinations of out-of-tolerance parts can be assembled, and accepting some assembly failures may be less expensive than using a more accurate manufacturing process.

D6 ALGORITHM FUNDAMENTALS

Analysis of the probabilities of pass and fail errors is characterized by the true value, the measured value, and the following inputs which must be known before proceeding with the analysis:

- the process distribution
- the measurement error distribution
- the tolerance limits
- the gaging limits.

D7 NOTATION

X = true value
X_m = measured value
Z = distance from the center of the measurement error distribution
$P_p(X)$ = process distribution
$P_m(Z)$ = measurement error distribution
T = tolerance limit for a one-sided measurement
T_l = lower tolerance limit for a two-sided measurement
T_u = upper tolerance limit for a two-sided measurement
G = gaging limit for a one-sided measurement
G_l = lower gaging limit for a two-sided measurement
G_u = upper gaging limit for a two-sided measurement

D8 TWO-SIDED MEASUREMENTS

D8.1 Probability of a Pass Error

In terms of this analysis, the probability of a pass error is the probability that the measured value is within gaging limits and the true value is outside the tolerance limits.

Steps in developing an expression for the probability of a pass error are:

(a) find the probability the true value lies in the small interval X, $X + \Delta X$

(b) find, for a particular true value, the probability the measured value passes

(c) combine the results of (a) and (b) to find the probability the true value is in X, $X + \Delta X$ and the feature passes

(d) integrate the result of (c) over the interval where the feature is non-conforming to find the probability that a measurement will result in a pass error.

Referring to Fig. D1, the probability the true value lies in X, $X + \Delta X$ is the area under the $P_p(X)$ distribution curve in the interval X, $X+ \Delta X$ divided by the total area under the curve, or

$$\frac{P_p(X)\Delta X}{\int_{-\infty}^{\infty} P_p(X)dX}$$

This Appendix follows the convention that the ordinates of the measurement error and process distribution curves are scaled so the total area under each curve equals one. Then this expression becomes

$$P_p\,(X)\,\Delta X$$

For the feature to pass, the measured value must lie in the X interval G_l to G_u. This is the Z interval G_l-X to G_u-X. Probability the measured value passes is area under the $P_m(Z)$ distribution curve in this interval

$$\int_{G_l-X}^{G_u-X} P_m(Z)dZ$$

Probability the true value lies in the interval X, $X + X$ and the workpiece feature passes is the product of these,

$$P_p(X)\Delta X \int_{G_l-X}^{G_u-X} P_m(Z)dZ$$

For a pass error to occur, the feature must be non-conforming. This occurs if $X < T_l$ or $X > T_u$. Probability of a pass error is the integral of the above expression from $-\infty$ to T_l plus the integral from T_u to ∞.

Copyright ASME International
Provided by IHS under license with ASME
No reproduction or networking permitted without license from IHS
Not for Resale

$$\int_{-\infty}^{Tl}\left[\int_{Gl-X}^{Gu-X} P_m(Z)dZ\right]P_p(X)dX + \int_{Tu}^{\infty}\left[\int_{Gl-X}^{Gu-X} P_m(Z)dZ\right]P_p(X)dX$$

As an example of how to evaluate this expression, consider the following case.

The process distribution is a Gaussian distribution with a standard deviation (σp) of 0.121 mm centered at $X = 1500$ mm.

The measurement error distribution is a Gaussian distribution, $\sigma m = 0.04$ mm.

The tolerance and gaging limits are

$$T_l = 1499.8$$

$$T_u = 1500.2$$

$$G_l = 1499.82$$

$$G_u = 1500.18$$

We assume, subject to verification, that values of the process and measurement error distributions outside a 3σ limit are negligible.

Let D_m = the X value of the center of the process distribution. Then at the lower end of the process distribution, to make it possible for the feature to pass

$$X > G_l - 3\ \sigma m$$

To make it possible for the true value to occur

$$X > D_m - 3\ \sigma p$$

For the feature to be non-conforming

$$X < T_l$$

Similarly at the upper end

$$X < G_u + 3\ \sigma m$$

$$X < D_m + 3\ \sigma p$$

$$X > T_u$$

Calculating for the lower end of the distribution,

$$X > 1499.7$$

$$X > 1499.637$$

$$X < 1499.8$$

Thus the interval for X where a pass error can occur is 1499.7 to 1499.8. For this example we divide this interval into four equal segments which identify five interval end points. We analyze the intervals and end points by means of a table of ordinates and areas under portions of the normal curve, or by means of an equivalent algorithm. The table is such that if position is measured in standard deviations, total area under the curve is 1.

For each true value X at an interval end point we want to find

$$\int_{Gl-X}^{Gu-X} P_m(Z)dZ$$

This is represented by the area under the normal curve from $-\infty$ to G_u-X, minus the area from $-\infty$ to G_l-X.

To evaluate this for each interval end point, we calculate G_u-X and G_l-X first in mm, then in standard deviations of the measurement error distribution. We determine areas under the curve from the table and find the difference between the G_u-X and the G_l-X areas.

These differences are values of the integral for the case where total area under the curve is 1. These calculations are shown in Table D1.

Copyright ASME International
Provided by IHS under license with ASME
No reproduction or networking permitted without license from IHS
Not for Resale

TABLE D1

X	G_u-X	G_l-X	$(G_u X)_m$	$(G_l$-$X)_m$	Area u	Area l	Integral
1499.7	0.48	0.12	12	3	1	0.9987	0.0013
1499.725	0.455	0.095	11.375	2.375	1	0.9912	0.0088
1499.75	0.43	0.07	10.75	1.75	1	0.9599	0.0401
1499.775	0.405	0.045	10.125	1.125	1	0.8697	0.1303
1499.8	0.38	0.02	9.5	0.5	1	0.6915	0.3085

Next we determine $P_p(X)$ for each end point and multiply it by the result of the previous step to find

$$\left[\int_{G_l\text{-}X}^{G_u\text{-}X} P_m(Z)dZ\right]P_p(X)$$

for each end point. To find $P_p(X)$ we calculate 1500-X, first in mm, then in standard deviations of the process distribution. The result allows us to read $P_p(X)$ from the table for the case where total area under the process distribution curve is 1. These calculations are shown in Table D2.

The products in Table D2 show that the assumption concerning 3σ is valid.

Noting the intervals for X are 0.207 standard deviations of the process distribution, we integrate the above products by Simpson's rule (see any mathematics handbook).

$$\frac{0.207}{3}[0.000024 + 4\,(0.000265) + 2\,(0.001893) + 4\,(0.009212) + 0.031405] = 0.005045$$

This is the value for

$$\int_{-\infty}^{T_l}\left[\int_{G_l\text{-}X}^{G_u\text{-}X} P_m(Z)dZ\right]P_p(X)dX$$

Since this example is symmetrical, the probability of a pass error is twice this: 0.0101 or 1.01%.

D8.2 Probability of a Fail Error

In terms of this analysis, the probability of a fail error is probability the measured value is outside the gaging limits and the true value is within the tolerance limits.

Referring to Fig. D1, steps in developing an expression for probability of a fail error are:

(a) find probability the true value lies in the small interval X, $X + \Delta X$

(b) find, for a particular true value, probability a measured value fails

(c) combine the results of (a) and (b) to find probability the true value lies in X, $X + \Delta X$ and the feature fails

(d) integrate the result of (c) over the interval where the feature is conforming to find probability that a measurement will result in a fail error.

Probability the true dimension lies in X, $X + \Delta X$ is

$$P_p(X)\Delta X$$

For the feature to fail, the measured value must lie outside the interval G_l to G_u. This has two parts: the Z interval from $-\infty$ to G_l-X and the Z interval from G_u-X to ∞.

Probability the measured value lies in one of these intervals is

$$\int_{-\infty}^{G_l\text{-}X} P_m(Z)dZ + \int_{G_u\text{-}X}^{\infty} P_m(Z)dZ$$

Probability the true value lies in the interval X, $X + \Delta X$ and the workpiece feature fails is

$$P_p(X)\Delta X\left[\int_{-\infty}^{G_l\text{-}X} P_m(Z)dZ + \int_{G_u\text{-}X}^{\infty} P_m(Z)dZ\right]$$

For a fail error to occur, the feature must be conforming. The feature is conforming if the true value lies between T_l and T_u. Probability of a fail error is the preceding expression integrated over the interval from T_l to T_u:

Copyright ASME International
Provided by IHS under license with ASME
No reproduction or networking permitted without license from IHS Not for Resale

TABLE D2

X	1500-X	(1500-X)/p	$P_p(X)$	Product [Note (1)]
1499.7	0.3	2.479	0.0184	0.000024
1499.725	0.275	2.273	0.0301	0.000265
1499.75	0.25	2.066	0.0472	0.001893
1499.775	0.225	1.86	0.0707	0.009212
1499.8	0.2	1.653	0.1018	0.031405

NOTE:
(1) $P_p(X)$ times integral from Table D1.

$$\int_{Tl}^{Tu}\left[\int_{-\infty}^{Gl-X} P_m(Z)dZ + \int_{Gu-X}^{\infty} P_m(Z)dZ\right]P_p(X)dX$$

As an example of how to evaluate this expression, we continue the case of para. 4.1.

At the lower end of the process distribution, to make it possible for the feature to fail,

$$X < G_l + 3\sigma m$$

To make it possible for the true value to occur,

$$X > D_m - 3\sigma p$$

For the feature to be conforming,

$$X > T_l$$

Similarly at the upper end

$$X > G_u - 3\sigma m$$

$$X < D_m + 3\sigma p$$

$$X < T_u$$

Calculating for the lower end of the distribution

$$X < 1499.94$$

$$X > 1499.637$$

$$X > 1499.8$$

Thus the interval for X is 1499.8 to 1499.94. These calculations are shown in Table D3.

For the lower end of the process distribution the integral from G_u-X to has a negligible value. These calculations are shown in Table D4.

Noting the intervals for X are 0.289 standard deviations of the process distribution and integrating by Simpson's rule.

$$\frac{0.289}{3}[0.07039 + 4(0.05562) + 2(0.02366) + 4(0.00493) + 0.00046] = 0.0347$$

Since the problem is symmetrical, probability of a fail error is twice this: 0.06943 or 6.9%.

D9 ONE-SIDED MEASUREMENTS

D9.1 Probability of a Pass Error

Referring to Fig. D2, steps in developing an expression for probability of a pass error are:

(a) find probability the true value is in the small interval X, $X + \Delta X$

Copyright ASME International
Provided by IHS under license with ASME
No reproduction or networking permitted without license from IHS
Not for Resale

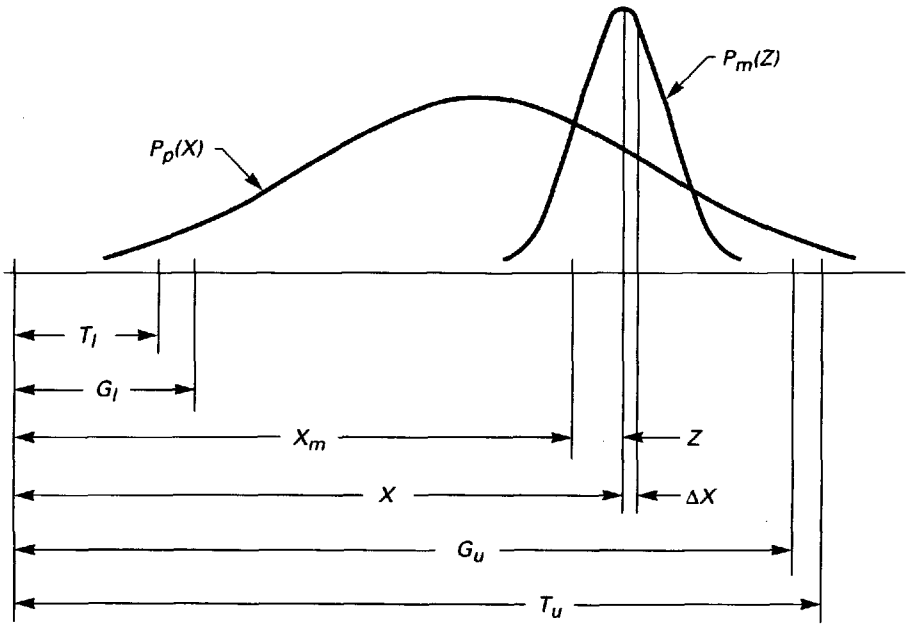

FIG. D1

TABLE D3

X	G_l-X	$(G_l$-$X)/_m$	Integral
1499.8	0.02	0.5	0.6915
1499.835	-0.015	-0.375	0.3538
1499.87	-0.05	-1.25	0.1056
1499.905	-0.085	-2.125	0.0168
1499.94	-0.012	-3	0.0013

(b) find, for a particular true value, probability the measured value passes

(c) combine the results of (a) and (b) to find probability the true value is in X, $X + \Delta X$ and the feature passes

(d) integrate the result of (c) over the interval where the feature is non-conforming to find probability that a measurement will result in a pass error.

Probability the true value lies in X, $X + \Delta X$ is

$$P_p(X)\Delta X$$

For the feature to pass, the measured value must lie in the X interval from 0 to G. This is the Z interval $-X$ to G-X. Probability the measured value will pass is

$$\int_{-X}^{G-X} P_m(Z)dZ$$

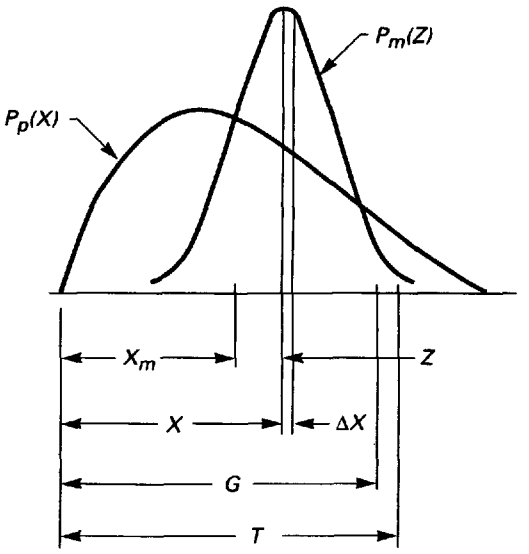

FIG. D2

Probability the true value lies in X, $X + \Delta X$ and the feature passes is

$$P_p(X)\Delta X \int_{-X}^{G-X} P_m(Z)dZ$$

Copyright ASME International
Provided by IHS under license with ASME
No reproduction or networking permitted without license from IHS
Not for Resale

TABLE D4

X	$(1500-X)/P$	$P_p(X)$	Product [Note (1)]
1499.8	1.653	0.1018	0.07039
1499.835	1.364	0.1572	0.05562
1499.87	1.074	0.2241	0.02366
1499.905	0.785	0.2932	0.00493
1499.94	0.496	0.3528	0.00046

NOTE:
(1) $P_p(X)$ times integral from Table D3.

For the feature to be non-conforming, the true value must be greater than T. Then probability of a pass error is

$$\int_T^\infty \left[\int_{-X}^{G-X} P_m(Z)dZ \right] P_p(X)dX$$

The means for evaluating this expression are similar to those of para. 4.1 except for the natures of the measurement error distribution and the process distribution.

Values of pass and fail errors are not strongly dependent on the forms of measurement uncertainty and process distributions. Therefore any forms that are intuitively reasonable and meet the conditions of the problem may be used.

A Gaussian curve is usually a reasonable choice for the measurement error distribution. Noting that this is the distribution of possible true values about the measured values, it cannot contain any negative values. This may be ensured by cutting off the negative portion of the distribution. When this is done, area under the curve is no longer one.

Thus it is necessary to correct the probability expression by dividing by

$$\int_o^\infty P_p(X)\,dX$$

Note this has a different value for each X.

If the manufacturing process is such that very small errors frequently occur, the process distribution might be taken as half of a normal curve with a maximum point at zero.

Ordinates of the curve must be adjusted to ensure a total area under the curve of one.

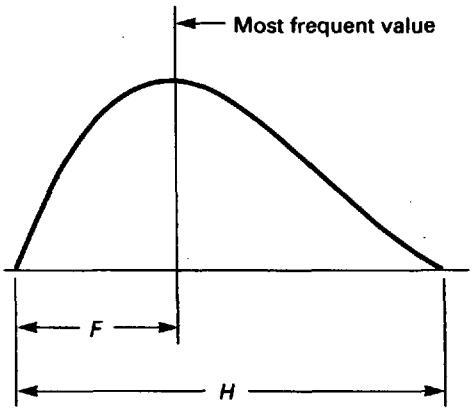

FIG. D3

If the manufacturing process is such that very small errors do not frequently occur, the cubic distribution of Fig. D3 is suitable.

Taking $P_p = C_0 + C_1X + C_2X^2 + C_3X^3$, we find

$$C_0 = 0$$

$$C_1 = \frac{12\,(3F^2 - 2FH)}{6F^2H^2 - 6FH^3 + H^4}$$

$$C_2 = \frac{12(H^2 - 3F^2)}{6F^2H^3 - 6FH^4 + H^5}$$

$$C_3 = \frac{12(2F - H)}{6F^2H^3 - 6FH^4 + H^5}$$

For this curve, H should be no greater than three times F, since otherwise the curve will dip below the X axis before reaching H. In carrying out the integration, values of $P_p(X)$ for X greater than H are zero.

D9.2 Probability of a Fail Error

Steps for developing an expression for probability of a fail error are:

(a) find probability the true value lies in the small interval X, $X + \Delta X$

Copyright ASME International
Provided by IHS under license with ASME
No reproduction or networking permitted without license from IHS
Not for Resale

(b) find, for a particular true value, probability a measured value fails

(c) combine the results of (a) and (b) to find probability the true value is in X, $X + \Delta X$ and the feature fails

(d) integrate the result of (c) over the interval where the feature is conforming to find probability that a measurement will result in a fail error.

Probability the true value lies in X, $X + \Delta X$ is

$$P_p(X)\ \Delta X$$

For the feature to fail, the measured value must lie in the X interval from G to ∞. This is the Z interval from $G\text{-}X$ to ∞. Probability the measured value lies in this interval is

$$\int_{G-X}^{\infty} P_m(Z)dZ$$

Probability the true value lies in X, $X + \Delta X$ and the workpiece feature fails is

$$P_p(X)\ \Delta X \int_{G-X}^{\infty} P_m(Z)dZ$$

For a fail error to occur, the feature must be conforming. This occurs if the true value lies in the interval from zero to T. Probability of a fail error is the previous expression integrated over the interval from zero to T:

$$\int_o^T \left[\int_{G-X}^{\infty} P_m(Z)dZ\right] P_p(X)dX$$

Methods for evaluating this expression are similar to those of para. 5.1.

D10 COMBINING PROBABILITIES

Suppose several features of a workpiece are measured. There may be a need to find probabilities of pass and fail errors for the workpiece. These are probabilities of accepting a non-conforming workpiece, and of rejecting a conforming workpiece without regard to which features are conforming or non-conforming.

The method of calculation depends on the degree of correlation. Two dimensions are correlated if whenever one fails, the other also fails. An example is diameters of two holes finished with the same reamer, if reamer wear is the only significant factor causing failure. Dimensions are uncorrelated if there is no relationship between failures. An example is the locations of two holes where random variations in machine positioning error are the only factors in failure. Often some level of correlation exists. An example might be the location of two holes where random variations in machine positioning error and workpiece thermal expansion both contribute to failure.

Consider uncorrelated probabilities, P1, P2, P3 ... of pass errors for different features of a workpiece. Steps in combining these to determine probability of a pass error for the workpiece are:

(a) calculate probabilities 1-P1, 1-P2, 1-P3 ... for each feature that a pass error will not occur

(b) multiply the probabilities of step (a) together to find probability that none of the features will have pass errors. This is probability the workpiece will not have a pass error.

(c) subtract the result of step (b) from one to find probability of a pass error for the workpiece.

If two measurements are completely correlated, then their sum is treated as a single probability in the foregoing procedure.

If certain dimensions are partially correlated, then two calculations are made. One assumes no correlation and the other assumes complete correlation. The true probability of a workpiece pass error lies between the two calculated values and is determined by considering the degree of correlation.

Probability of a workpiece fail error is determined in the same manner.

Copyright ASME International
Provided by IHS under license with ASME
No reproduction or networking permitted without license from IHS
Not for Resale

NONMANDATORY APPENDIX E
REFERENCES

E1 PURPOSE

This Appendix lists references in addition to those of Section 3 of this Standard which may be useful in understanding dimensional measurement, and in writing dimensional measurement plans.

E2 REFERENCES

—, Mil-HDBK-204A (AR), Design of Inspection Equipment for Dimensional Characteristics. New Jersey: Dept. of Army.

—, Optical Alignment. Leicester, England: Rank Taylor Hobson Limited. 1984.

Abernathy, R. B., Measurement Uncertainty Handbook. Research Triangle Park, NC: Instru. Soc. 1980.

AIAG DOC. APQP-2, Advanced Product Quality Planning and Control Plan (APQP). Detroit, MI: Automotive Industry Action Group.

AIAG DOC. FMEA-2, Potential Failure Mode and Effects Analysis (FMEA). Detroit, MI: Automotive Industry Action Group.

AIAG DOC. MSA-2, Measurement Systems Analysis Manual (MSA). Detroit, MI: Automotive Industry Action Group.

AIAG DOC. PPAP-2, Production Part Approval Process (PPAP). Detroit, MI: Automotive Industry Action Group.

AIAG DOC. QSA-2, Quality System Assessment (QSA). Detroit, MI: Automotive Industry Action Group.

AIAG DOC. QS9-2, Quality System Requirements (QS9000). Detroit, MI: Automotive Industry Action Group.

AIAG DOC. SPC-2. Statistical Process Control Manual (SPC). Detroit, MI: Automotive Industry Action Group.

AIAG DOC. TEA, Tooling & Equipment Assessment. Detroit, MI: Automotive Industry Action Group.

AIAG DOC. TES, Tooling & Equipment Supplement to QS-9000. Detroit, MI: Automotive Industry Action Group.

ANSI B89.6.1M, Measurement of Qualified Plain Internal Diameters for Use as Master Rings and Ring Gages. New York, NY: American Society of Mechanical Engineers, 1992.

ANSI B89.6.2-1973 (R1995), Temperature and Humidity Environment for Dimensional Measurement. New York, NY: American Society of Mechanical Engineers. 1973.

ANSI/ASME B89.3.4M-1985, Axes of Rotation — Methods for Specifying and Testing. New York, NY: American Society of Mechanical Engineers. 1985.

ANSI/ASME B89.1.9M, Precision Gage Blocks for Length Measurement (Through 20 in. and 500 mm). New York, NY: American Society of Mechanical Engineers. 1984.

ANSI/ASQC D1160-1995, Formal Design Review. Milwaukee, WI: American Society for Quality Control. 1995.

ANSI/ASQC M1-1996, American National Standard for Calibration Systems. Milwaukee, WI: American Society for Quality Control. 1996.

ANSI/ASQC Q2-1991, Quality Management System and Elements for Laboratories — Guidelines. Milwaukee, WI: American Society for Quality Control. 1991.

ANSI/ASQC Z1.4-1993, Sampling Procedures and Tables for Inspection by Attributes. Milwaukee, WI: American Society for Quality Control. 1993.

ANSI/ASQC Z1.9-1993, Sampling Procedures and Tables for Inspection by Variables for Percent Nonconforming. Milwaukee, WI: American Society for Quality Control. 1993.

ANSI/ISO/ASQC A3534-1-1993, Statistics — Vocabulary and Symbols — Probability and General Statistical Terms (Revision and Redesignation of ANSI/ASQC A1-1987 and ANSI/ASQC A2-1987). Milwaukee, WI: American Society for Quality Control. 1993.

ANSI/ISO/ASQC A3534-2-1993, Statistics — Vocabulary and Symbols — Statistical Quality Control (Revision and Redesignation of ANSI/ASQC A1-1987 and ANSI/ASQC A2-1987). Milwaukee, WI: American Society for Quality Control. 1993.

ANSI/ISO/ASQC A8402-1994, Quality Management and Quality Assurance — Vocabulary (Revision and

Copyright ASME International
Provided by IHS under license with ASME
No reproduction or networking permitted without license from IHS

Not for Resale

Redesignation of ANSI/ISO/ASQC A3-1987). Milwaukee, WI: American Society for Quality Control. 1994.

ANSI/ISO/ASQC Q10007-1995. Quality Management — Guidelines for Configuration Management. Milwaukee, WI: American Society for Quality Control. 1995.

ANSI/ISO/ASQC Q10013-1995, Guidelines for Quality Manuals. Milwaukee, WI: American Society for Quality Control. 1995.

Anthony, D. M., Engineering Metrology, Pergamon Press/Butterworth-Heinemann, 1986.

ASME B5.54, Methods for Performance Evaluation of Computer Numerically Controlled Machining Centers. New York, NY: American Society of Mechanical Engineers. 1992.

ASME B46.1-1995. Surface Texture (Surface Roughness, Waviness and Lay). New York, NY: American Society of Mechanical Engineers. 1995.

ASME B89.1.10M, Dial Indicators (for Linear Measurements). New York, NY: American Society of Mechanical Engineers. 1987.

ASME B89.4.1, Methods for Performance Evaluation of Coordinate Measuring Machines. New York, NY: American Society of Mechanical Engineers. 1997.

ASQC Quality Costs Committee: Campanella, J., ed., Principles, Implementation, and Use, 2nd ed. Milwaukee, WI: ASQC Quality Press, 1990.

ASQC Statistics Division, Glossary and Tables for Statistical Quality Control, 3rd ed. Milwaukee, WI: ASQC Quality Press. 1996.

ASTM E 29-93a, Standard Practice for Using Significant Digits in Test Data to Determine Conformance with Specifications. Philadelphia, PA: American Society for Testing and Materials. 1993.

ASTM E 141-91, Standard Practice for Acceptance of Evidence Based on the Results of Probability Sampling. Philadelphia, PA: American Society for Testing and Materials. 1991.

ASTM E 177-90a, Standard Practice for Use of the Terms Precision and Bias in ASTM Test Methods. Philadelphia, PA: American Society for Testing and Materials. 1990.

ASTM E 178-94, Standard Practice for Dealing with Outlying Observation. Philadelphia, PA: American Society for Testing and Materials. 1994.

ASTM E 456-96, Standard Terminology Relating to Quality and Statistics. Philadelphia, PA: American Society for Testing and Materials. 1996.

ASTM E 691-92, Standard Practice for Conducting an Interlaboratory Study to Determine the Precision of a Test Method. Philadelphia, PA: American Society for Testing and Materials. 1992.

ASTM E 1325-91, Standard Terminology Relating to Design of Experiments. Philadelphia, PA: American Society for Testing and Materials. 1991.

Barford, N.C., Experimental Measurements: Precision, Error & Truth. New York, NY: Wiley. 1985.

Barrentine, L.B., Concepts for R&R Studies. Milwaukee, WI: ASQC Quality Press. 1991.

Beckwith, T.G., and Marangoni, R.D., Mechanical Measurements. 4th ed. New York, NY: Addison Wesley. 1990.

Bosch, J.A., ed., Coordinate Measuring Machines and Systems. New York: Marcel Dekker. 1995.

Box, G., et al, Statistics for Experimenters: An Introduction to Design, Data Analysis & Model Building. New York, NY: Wiley. 1978.

Bryan, J., McClure, E., Brewer, W., and Pearson, J., Thermal Effects in Dimensional Metrology. ASME Paper No. 65 PROD-13 and Mechanical Engineering. New York, NY: American Society of Mechanical Engineers. February, 1966.

BS 7172, Assessment of Position, Size and Departure from Nominal Form of Geometric Feature.

Busche, T., Fundamentals of Dimensional Metrology. Wilkie Brothers Foundation. New York, NY: Delmar Publ., Inc. 2nd ed. 1989.

CAM-I R-92-QAP-01, Dimensional Inspection Techniques Specification (DITS) Final Report.

Metrology: Course 27. Waco, TX: Card Communications. 1984.

Center for Occupational Research & Development Staff, Metrology: Course 27. Tulsa, OK: GP Courseware. 1979.

Charbonneau, H.C., and Webster, G.L., Industrial Quality Control. New York: Prentice Hall. 1978.

Cielo, P., ed., Optical Techniques for Industrial Inspection. Orlando, FL: Academic Press. 1988.

Clement, A., et al, Three Dimensional Tolerancing with CAD/CAM Systems. Massachusetts: Addision Wesley. 1997.

Dagnall, H., Exploring Surface Texture. Leicester, England: Rank Taylor Hobson Limited. 1986.

DataMyte Corp., DataMyte Handbook. Minnetonka, MN. 1987.

Devor, R.E., Chang, T., Sutherland, S.W., Statistical Quality Design and Control. New York, NY: MacMillan. 1992.

Dietrich, C.F., Uncertainty, Calibration & Probability: The Statistics of Scientific & Industrial Measurement. Institute of Physics, UK. 1991.

Copyright ASME International
Provided by IHS under license with ASME
No reproduction or networking permitted without license from IHS

Not for Resale

DOD-STD-45662, Calibration System Requirements.

Doebelin, E.O., Measurement Systems, 4th ed., New York, NY: McGraw Hill. 1990.

Duncan, A.J., Quality Control and Industrial Statistics 5th ed. Illinois: Richard D. Irwin. 1986.

Easterling, R.G. et al, Absolute and Other Tolerances, Albuquerque, NM: Sandia. 1989.

Farago, F.T. and Curtis, M., Handbook of Dimensional Measurement. 3rd ed. New York, NY: Industrial Press. 1994.

FED-STD-H28/20, Inspection Methods for Acceptability.

Feigenbaum, A.V., Total Quality Control, Third Edition, Revised. New York, NY: McGraw Hill. 1991.

Figliola, R.J. and Beasley, Don, Theory Design for Mechanical Measurements. New York, NY: Wiley. 1991.

Foster, Lowell W., Geo-Metrics III. Reading, MA: Addison-Wesley. 1994.

Gara, A. ed., Optical Sensing and Measurement. New York, NY: Springer Verlag. 1989.

Gasvik, K.J., Optical Metrology. 2nd ed. New York, NY: Wiley. 1996.

Gladman, C.A., Gauging Principles. CIRP Annals Volume XVIV: 377;en384. 1971.

GM Powertrain, Measurement Planning, Use and Improvement. Pontiac, MI: General Motors Corp. 1993.

Gooldy, Gary, Geometric Dimensioning and Tolerancing. New Jersey: Prentice-Hall 1995.

Grant, E.I., Leavenworth, R.S., Statistical Quality Control 7th ed. New York: McGraw-Hill. 1995.

Griffith, G.K., The Quality Technician's Handbook. New Jersey: Prentice-Hall. 1996.

Griffith, G.K., Measuring and Gaging Geometric Tolerances. New Jersey: Prentice-Hall. 1994.

Henzold, G., Handbook of Geometrical Tolerancing: Design, Manufacturing and Inspection. New York, NY: Wiley. 1995.

Hocken, R.J., Technology of Machine Tools, Volume 5: Machine Tool Accuracy. California: Lawrence Livermore Laboratory. 1980.

Hocken, R., Raja, J. and Babu, U., Sampling Issues in Coordinate Metrology. Mfg. Rev., December 1993b.

Horne, D.F., Measuring Systems & Transducers for Industrial Applications. Philadelphia, PA: IOP Publications. 1988.

IEC/ISO GUIDE 25-1990, General Requirements for the Competence of Calibration and Testing Laboratories.

Ishikawa, K., Guide to Quality Control. Asian Productivity Organization/NY. New York, NY: Quality Resources. 1986.

ISO 3534-3-1985, Statistics — Vocabulary and Symbols — Part 3: Design of Experiments.

ISO 5725-1-1994, Accuracy (trueness and precision) of measurement methods and results — Part 1: General principles and definitions.

ISO-5725-2-1994, Accuracy (trueness and precision) of measurement methods and results — Part 2: Basic methods for the determination of repeatability and reproducibility of a standard measurement method.

ISO 5725-3-1994, Accuracy (trueness and precision) of measurement methods and results — Part 3: Intermediate measures of the precision of a standard measurement method.

ISO 10012-1-1992, Quality assurance requirements for measuring equipment — Part 1: Metrological confirmation system for measuring equipment.

ISO/TR 5460, Technical Drawings — Geometrical Tolerancing — Tolerancing of Form, Orientation, Location and Run-Out — Verification Principles and Methods — Guidelines.

ISO/14253-1, Geometrical Product Specifications (GPS) — Inspection by measurement of workpieces and measuring equipment — Part 1: Decision rules for proving conformance or non-conformance with specifications.

ISO/TR 14253-2, Geometrical Product Specifications (GPS) — Inspection by measurement of workpeices and measuring equipment — Part 2: Guide to the estimation of uncertainty in GPS measurement, in calibration of measuring equipment and in product verification.

Juran, J.M., Gryna, F.M., editors, Juran's Quality Control Handbook. New York, NY: McGraw-Hill. 1988.

Juran, J.M., Juran on Quality by Design: The New Steps for Planning Quality into Goods and Services. New York, NY: Free Press. 1992.

Kane, V.E., Process Capability Indices. Journal of Quality Technology, 18(1), pp. 41–52. 1986.

Kececioglu, D., Reliability Engineering Handbook, Volumes 1 and 2. NJ: Prentice-Hall. 1991.

Kennedy, C.W., et al, Inspection and Gaging. New York, NY: Industrial Press. 1987.

Kirschling, G., Quality Assurance and Tolerances. Berlin: Springer-Verlag. 1991.

Kotz, S. and Johnson, N.C., Process Capability Indices. London: Chapman & Hall. 1993.

Krulikowski, A., Fundamentals of Geometric Dimensioning and Tolerancing, 2nd ed. New York: Delmar. 1998.

Ku, H., Uncertainty and Accuracy in Physical Measurements. NIST Special Publication 805. Gaithersburg,

Copyright ASME International
Provided by IHS under license with ASME
No reproduction or networking permitted without license from IHS
Not for Resale

MD: National Institute of Standards and Technology.

Kurfess, T.R., et al, A Statistical Analysis of Cylindricity. Carnegie Mellon Univ.

Kurfess, T.R., et al, Statistical Verification of Part Geometry. Carnegie Mellon Univ.

Luxmoore, A.R., ed., Optical Transducers & Techniques in Engineering Measurement. New York, NY: Elsevier. 1983.

Mandel, John, Evaluation and Control of Measurements. New York: Marcel Dekker. 1991.

Mandel, John, The Statistical Analysis of Experimental Data. New York: Dover. 1984.

Meadows, J.D., Geometric Dimensioning and Tolerancing. New York: Marcel Dekker. 1995.

Mills, C.A., The Quality Audit. New York, NY: McGraw-Hill. 1989.

Molet, P., Optics in Metrology. New York, NY: Pergamon Press. 1960.

Montgomery, D.C., Design and Analysis of Experiments, Fourth Ed. New York, NY: Wiley. 1997.

Montgomery, D.C., Introduction to Statistical Quality Control. Third Ed. New York NY: Wiley. 1996.

Moore, Wayne R., Foundations of Mechanical Accuracy. Bridgeport, CN: Moore Special Tool Company. 1989.

Morris, A.S., Measurement & Calibration for Quality Assurance. New York, NY: Prentice-Hall. 1991.

Morris, A.S., Principles of Measurement and Instrumentation. 2nd ed. New York, NY: Prentice-Hall. 1993.

Mummery, Leigh, Surface Texture Analysis: The Handbook. West Germany: Hommelwerke GmbH. 1990.

Newmann, A., Geometric Dimensioning and Tolerancing. Longboat Key, FL: Technical Consultants. 1995.

Nielsen, H.S., "Uncertainty and Dimensional Tolerances," Quality, Vol. 31, No. 5, pp. 25-19. Carol Stream, IL: Hitchcock Publishing Co. 1992.

Ott, E.R., Schilling, E.G., Process Quality Control. New York: McGraw-Hill. 1990.

Pennella, C.R., Managing the Metrology System, Second Edition. Milwaukee, WI: ASQC Quality Press. 1992.

Phillips, S.D., et al, Measurement Uncertainty Considerations for Coordinate Measuring Machines. NIST (NISTIR 5170).

Roth, E.S., Functional Gaging. Ann Arbor, MI: Bks on Demand, UMI.

Roth, E.S., Gaging: Practical Design & Application. Dearborn, MI: Society of Manufacturing Engineers. 1983.

Sirohi, R.S. and Drishna, Mechanical Measurement. 3rd ed. New York, NY: Halsted Press. 1993.

Slocum, A.H., Precision Machine Design. New Jersey: Prentice-Hall. 1992.

Soars, O.D., ed., Optical Metrology: Coherent and Incoherent Optics for Metrology, Sensing and Control in Science, Industry and Biomedicine. Norwell, MA: Kluwer Academic. 1987.

Stamatis, D.H., Failure Mode and Effect Analysis. Milwaukee, WI: ASQC Quality Press. 1995.

Suntag, C., Inspection and Inspection Management. Milwaukee,WI: ASQC Quality Press. 1993.

Syndham, P.H., ed., Handbook of Measurement Science: Theoretical Fundamentals, Volume I. New York, NY: Wiley-Interscience. 1992.

Syndham, P.H., ed., Handbook of Measurement Science: Practical Fundamentals, Volume II. New York, NY: Wiley-Interscience. 1982.

Syndham, P.H., Introduction to Measurement Science & Engineering. New York, NY: Wiley. 1992.

Syndham, P.H., Measureing Instruments: Tools of Knowledge and Control. Elec. Eng. 1980.

Tabenkin, A., "Standard Chains and Effects of Form and Finish," Quality Magazine.

Tague, N.R., The Quality Toolbox. Milwaukee, WI: ASQC Quality Press. 1995.

Taylor, J.R., An Introduction to Error Analysis. California: University Science Books. 1982.

Taylor, B.N., et al, Guidelines for Evaluating and Expressing the Uncertainty of NIST Measurement Results. NIST Technical Note 1297, National Institute of Standards and Technology, Gaithersburg, MD. 1993.

The National Conference of Standards Laboratories, Calibration Laboratory Manager's Guidebook. 1990.

Tse and Morse, Measurement & Instrumentation in Engineering, Principles & Basic Laboratory Experiments. New York, NY: Marcel-Dekker. 1989.

WECC, Guidelines for the Expression of the Uncertainty of Measurements in Calibrations.

WECC, The Certification of Coordinate Measuring Machines. WECC CMM Working Group.

Western Electric Company (AT&T), Statistical Quality Control Handbook. Indianapolis, IN: AT&T Technologies. 1956.

Wick, C., et al, Tool and Manufacturing Engineers Handbook. Volume IV, Quality Control and Assembly. Dearborn, MI: Society of Manufactruing Engineers. 1987.

Wilson, B.A., Design Dimensioning and Tolerancing. Tinley Park, IL: Goodheart-Willcox. 1996.

Yaro, H., Metrological Control — Industrial Measurement Management. New York, NY: Quality Resources. 1991.

Copyright ASME International
Provided by IHS under license with ASME
No reproduction or networking permitted without license from IHS

Not for Resale

AMERICAN NATIONAL STANDARDS FOR DIMENSIONAL METROLOGY AND CALIBRATION OF INSTRUMENTS

Technical Paper 1990, Space Plate Test Recommendations for Coordinate Measuring Machines B89
Technical Report 1990, Parametric Calibration of Coordinate Measuring Machines B89
Calibration of Gage Blocks by Contact Comparison Methods (Through 20 in. and 500 mm) B89.1.2M-1991
Measurement of Plain External Diameters for Use as Master Discs or Cylindrical Plug Gages B89.1.5-1998
Measurement of Qualified Plain Internal Diameters for Use as Master Rings and Ring Gages ..... B89.1.6M-1984(R1997)
Precision Gage Blocks for Length Measurement (Through 20 in. and 500 mm) ..... B89.1.9M-1984(R1997)
Dial Indicators (for Linear Measurements) ..... B89.1.10M-1987(R1995)
Measurement of Out-of-Roundness ..... B89.3.1-1972(R1997)
Axes of Rotation — Methods for Specifying and Testing ..... B89.3.4M-1985(R1992)
Methods for Performance Evaluation of Coordinate Measuring Machines B89.4.1-1997
Temperature and Humidity Environment for Dimensional Measurement ..... B89.6.2-1973(R1995)
Dimensional Measurement Planning B89.7.2-1999

The ASME Publications Catalog shows a complete list of all the Standards published by the Society. For a complimentary catalog, or the latest information about our publications, call 1-800-THE-ASME (1-800-843-2763).

Copyright ASME International
Provided by IHS under license with ASME
No reproduction or networking permitted without license from IHS
Not for Resale

ASME Services

ASME is committed to developing and delivering technical information. At ASME's Information Central, we make every effort to answer your questions and expedite your orders. Our representatives are ready to assist you in the following areas:

ASME Press
Codes & Standards
Credit Card Orders
IMechE Publications
Meetings & Conferences
Member Dues Status
Member Services & Benefits
Other ASME Programs
Payment Inquiries
Professional Development
Short Courses
Publications
Public Information
Self-Study Courses
Shipping Information
Subscriptions/Journals/Magazines
Symposia Volumes
Technical Papers

How can you reach us? It's easier than ever!

There are four options for making inquiries* or placing orders. Simply mail, phone, fax, or E-mail us and an Information Central representative will handle your request.

Mail
ASME
22 Law Drive, Box 2900
Fairfield, New Jersey
07007-2900

Call Toll Free
US & Canada: 800-THE-ASME
(800-843-2763)
Mexico: 95-800-THE-ASME
(95-800-843-2763)
Universal: 973-882-1167

Fax-24 hours
973-882-1717
973-882-5155

E-Mail-24 hours
Infocentral
@asme.org

* Information Central staff are not permitted to answer inquiries about the technical content of this code or standard. Information as to whether or not technical inquiries are issued to this code or standard is shown on the copyright page. All technical inquiries must be submitted in writing to the staff secretary. Additional procedures for inquiries may be listed within.

Copyright ASME International
Provided by IHS under license with ASME
No reproduction or networking permitted without license from IHS
Not for Resale

ISBN 0-7918-2622-8





L07499

Copyright ASME International
Provided by IHS under license with ASME
No reproduction or networking permitted without license from IHS

Not for Resale