ASME B89.6.2 73 ■ 0759670 0047743 2 ■

F-43-01

AMERICAN NATIONAL STANDARD

Temperature and Humidity Environment for Dimensional Measurement

ANSI B89.6.2 - 1973

REAPPROVED '79

SECRETARIAT

THE AMERICAN SOCIETY OF MECHANICAL ENGINEERS

PUBLISHED BY

THE AMERICAN SOCIETY OF MECHANICAL ENGINEERS

United Engineering Center 345 East 47th Street New York, N. Y. 10017

Copyright ASME International
Provided by IHS under license with ASME
No reproduction or networking permitted without license from IHS

Not for Resale

No part of this document may be reproduced in any form, in an electronic retrieval system or otherwise, without the prior written permission of the publisher.

Copyright © 1974 by
THE AMERICAN SOCIETY OF MECHANICAL ENGINEERS
Printed in U.S.A.

Copyright ASME International
Provided by IHS under license with ASME
No reproduction or networking permitted without license from IHS
Not for Resale

FOREWORD

American National Standards Committee B89 on Dimensional Metrology, organized under the procedures of the American National Standards Institute, was formed to develop certain minimum standards for the various parameters in metrology and represents the consensus of United States industry. The various subcommittees of Committee B89 deal with the different parameters, i.e., environment, angle, length, geometry, etc. Subcommittee B89.6 is assigned the task of developing standards in physical environment and the effects of this environment and other extraneous influences on accuracy and precision of dimensional measurements. This standard for temperature and humidity is the work of the ANSI B89.6.2 Working Group. The results of its cooperative efforts are expressed in this document.

The effect of heat flow and resulting temperature gradients, differences and variation from measurement to measurement can result in errors of dimensional measurement because of the thermal expansion properties of materials. By international agreement the true size and shape of an object is that which exists at a uniform temperature of 68° F (20° C). The purpose of this standard is to provide American industry with practical requirements, procedures, and methods by which the intent of the international agreement can be satisfied without compromise to economical operation.

In discharging its responsibilities, the Working Group has recognized two basic needs of industry. First, it recognizes the need for standard approaches to the buying and selling of artificially controlled environments. Second, it recognizes the need for the qualification of individual measurements regarding errors induced by non-ideal temperature conditions.

Standard specifications for artificially controlled environments, in terms of the quality of temperature control, are especially necessary as a means of communicating metrological requirements to construction agencies such as heating and air-conditioning contractors. In specific instances, sufficient experience has been obtained such that required dimensional accuracies can be translated directly into temperature control specifications. However, the Working Group has concluded that no general set of temperature control specifications can be stated that will simultaneously assure levels of measurement accuracy and avoid the risk of overdesign or underdesign. Indeed, no recommendation can be made on which type of artificial environment, or even whether one is necessary or not, that would represent the most satisfactory engineering for every application. Consequently, the Working Group has chosen to list those properties of an artificially controlled environment that must be specified for an adequate description, to specify standard procedures for the administration of the required specifications, and to provide advisory information in the form of guidelines that the users of this standard may find helpful in the development of specifications adapted to individual needs.

The metrologist, his management, or a potential customer of a metrological service has, each for his own purpose, a need and a right to know the magnitude of measurement errors induced by the thermal environment. Therefore, this standard includes a description of procedures for the estimation of the error contributions caused by various defects of the thermal environment. Further, there is a need for a convenient means of communication between these parties. For this purpose, the Working Group has provided a standard figure of merit, the Thermal Error Index. Because this document, for the first time, presents the Thermal Error Index for use by industry at large, the methods for its determination and use are carefully developed in an appendix.

Recommendations for the control of humidity in metrological environments are included in this document, because it is often directly affected by and related to the control of temperature, especially in the design of room enclosures.

After approval by the B89 National Standards Committee and submittal to public review the Standard was approved by ANSI as a National Standard on October 30, 1973.

Copyright ASME International
Provided by IHS under license with ASME
No reproduction or networking permitted without license from IHS
Not for Resale

AMERICAN NATIONAL STANDARDS COMMITTEE B89

DIMENSIONAL METROLOGY

(The following is the roster of the Committee at the time of approval of this Standard)

OFFICERS

E. G. Loewen, *Chairman*
J. K. Emery, *1st Vice-Chairman* J. C. Moody, *2nd Vice-Chairman*
Mary Hoskins, *Executive Secretary*

AEROSPACE INDUSTRIES ASSOCIATION OF AMERICA, INC.
M. J. Leight, Metrology Section, Primary Standards Laboratories, Hughes Aircraft Company, Culver City, California

AMERICAN ORDNANCE ASSOCIATION
J. C. Moody, Sandia Corporation, Albuquerque, New Mexico

AMERICAN SOCIETY FOR QUALITY CONTROL
John Novotny, Sperry Gyroscope, Great Neck, New York

AMERICAN SOCIETY FOR TESTING AND MATERIALS
H. J. Stremba, Associate Director, Technical Operations, AST&M, Philadelphia, Pennsylvania

AMERICAN SOCIETY OF MECHANICAL ENGINEERS, THE
I. H. Fullmer, Mt. Dora, Florida
F. J. Meyer, Jr., Machine Tool Engineering Associates International, Forestdale, Rhode Island
P. A. Smith, Professor, Massachusetts Institute of Technology, Cambridge, Massachusetts

INSTITUTE OF ELECTRICAL & ELECTRONIC ENGINEERS
B. E. Lenehan, Bloomfield, New Jersey

INSTRUMENT SOCIETY OF AMERICA
J. M. Cameron, National Bureau of Standards, Washington, D.C.
Herbert France, Stanley Works, New Britain, Connecticut
L. N. Combs, Alternate, E.I. DuPont de Nemours & Company, Incorporated, Wilmington, Delaware

NATIONAL MACHINE TOOL BUILDERS ASSOCIATION
R. B. Clegg, Kearney & Trecker Corporation, Milwaukee, Wisconsin

SOCIETY OF MANUFACTURING ENGINEERS
J. A. Cariello, Essex Junction, Vermont
V. E. Diehl, Shelton Metrology Laboratory, Paducah, Kentucky

U.S. DEPARTMENT OF THE AIR FORCE
R. L. Martin, Aerospace Guidance & Metrology Center, Newark, Ohio

U.S. DEPARTMENT OF THE ARMY
M. L. Fruechtenicht, Army Metrology & Calibration Center, Redstone Arsenal, Alabama
O. M. Solovei, Edgewood Arsenal, Maryland
T. W. Kane, Quality Assurance Directorate, Watervliet Arsenal, Watervliet, New York
R. B. Smock, Physical Standards Laboratory, Army Metrology & Calibration Center, Redstone Arsenal, Alabama
J. M. McKinley, U.S. Army Development & Proof Services, Aberdeen Proving Ground, Maryland

U.S. DEPARTMENT OF COMMERCE–NATIONAL BUREAU OF STANDARDS
A. G. Strang, Optical Physics Division, National Bureau of Standards, Washington, D.C.
D. B. Spangenberg, Alternate, Naval Weapons Engineering Support Activity, Washington Navy Yard, Washington, D.C.

U.S. DEPARTMENT OF THE NAVY
E. R. Johnson, Chief of Naval Material, Department of the Navy, Washington, D.C.
J. N. Cornette, Naval Ship Systems Command, Washington, D.C.

UNIVERSITY OF CALIFORNIA
J. B. Bryan, Lawrence Livermore Laboratory, Livermore, California

Copyright ASME International
Provided by IHS under license with ASME
No reproduction or networking permitted without license from IHS
Not for Resale

FEDERAL ELECTRIC CORPORATION
S. P. Cholewa, Federal Electric Corporation, Kennedy Space Center, Florida

ENGIS CORPORATION
Dale W. Freyberg, Engis Corporation, Morton Grove, Illinois
R. J. Reilly, Alternate, Engis Corporation, Morton Grove, Illinois

GURLEY TELEDYNE
Ralph Geiser, Research & Development Laboratory, Gurley Teledyne, Troy, New York

METROLONICS STANDARDS LABORATORIES
J. A. Harrington, Metrolonics Standards Laboratories, Burbank, California

CUMMINS ENGINE COMPANY
M. E. Hoskins, Cummins Engine Company, Columbus, Indiana

AUTONETICS–NORTH AMERICAN AVIATION, INCORPORATED
J. A. Hall, Autonetics, Anaheim, California

MOORE SPECIAL TOOL COMPANY, INCORPORATED
A. E. Johnson, Moore Special Tool Company, Incorporated, Bridgeport, Connecticut
A. W. Young, Alternate, Moore Special Tool Company, Incorporated, Bridgeport, Connecticut

FEDERAL PRODUCTS CORPORATION
T. L. Johnson, Jr., Research & Development, Federal Products Corporation, Providence, Rhode Island
C. Whitney, Alternate, New Products Division, Federal Products Corporation, Providence, Rhode Island

THE VAN KEUREN COMPANY
R. W. Lamport, The Van Keuren Company, Watertown, Massachusetts

BAUSCH & LOMB, INCORPORATED
E. G. Loewen, Gratings & Metrology Research, Bausch & Lomb, Incorporated, Rochester, New York

GENERAL ELECTRIC COMPANY
W. B. McCallum, Knolls Atomic Power Laboratory, Schenectady, New York

SPERRY GYROSCOPE
John Novotny, Sperry Gyroscope Company, Great Neck, New York

GREENFIELD TAP & DIE–UNITED–GREENFIELD DIVISION OF TRW, INCORPORATED
H. W. Parker, Greenfield Tap & Die, Greenfield, Massachusetts

INTERNATIONAL BUSINESS MACHINE CORPORATION
Alvin Miller, I.B.M., Endicott, New York

STANDRIDGE GRANITE CORPORATION
Ray Standridge, Standridge Granite Corporation, Whittier, California

THE BENDIX CORPORATION
Leo Tschechtelin, Tool & Gage Inspection & Control, The Bendix Corporation, Kansas City, Missouri
F. W. Witzke, Automation & Measurement Division, The Bendix Corporation, Dayton, Ohio

BROWN & SHARPE MANUFACTURING COMPANY
E. L. Watelet, Brown & Sharpe Manufacturing Company, North Kingston, Rhode Island

L. S. STARRETT COMPANY
G. B. Webber, Webber Gage Division, L.S. Starrett Company, Cleveland, Ohio

INDIVIDUAL MEMBERS:
E. M. Pearne, Nuevo, California
J. H. Worthen, Warwick, Rhode Island
J. K. Emery, Weston, Massachusetts
R. P. Trowbridge, General Motors Technical Center, Warren, Michigan
R. L. Esken, Automation & Measurement Control, The Bendix Corporation, Dayton, Ohio
E. E. Lindberg, Hewlett Packard Laboratories, Palo Alto, California
J. C. Camhi, Engineering Development Laboratory, E. I. DuPont de Nemours & Company, Wilmington, Delaware

Copyright ASME International
Provided by IHS under license with ASME
No reproduction or networking permitted without license from IHS
Not for Resale

PERSONNEL OF SUBCOMMITTEE 6 ON ENVIRONMENT

J. C. Moody, Chairman, Sandia Laboratories, Albuquerque, New Mexico
Mary Hoskins, Secretary, Cummins Engine Co., Columbus, Indiana
J. B. Bryan, University of California, Lawrence Livermore Laboratory, Livermore, California
J. C. Camhi, Engrg. Dev. Laboratory, E. I. DuPont de Nemours & Co., Wilmington, Delaware
A. M. Dexter, Jr., United Nuclear Corp., Uncasville, Connecticut
M. L. Fruechtenicht, Army Metrology & Calibration Center, Redstone Arsenal, Alabama
J. A. Harrington, National Astro Laboratories, Inc., Burbank, California
M J. Leight, Primary Standards Laboratory, Hughes Aircraft Co., Culver City, California
E. R. McClure, University of California, Lawrence Livermore Laboratory, Livermore, California
J. M. McKinley, Aberdeen Proving Grounds, Aberdeen, Maryland
J. W. Noble, Mason & Hanger – Silas Mason Co., Inc., Amarillo, Texas
J. J. Schoonover, International Business Machines, Endicott, New York
A. D. Skufca, Newark Air Force Station, Newark, Ohio
L. G. Whitten, Jr., Union Carbide Nuclear Co., Oak Ridge, Tennessee
J. L. Wilson, Sandia Laboratories, Livermore, California
A. W. Young, Moore Special Tool Co., Inc., Bridgeport, Connecticut

Copyright ASME International
Provided by IHS under license with ASME
No reproduction or networking permitted without license from IHS
Not for Resale

AMERICAN NATIONAL STANDARD
TEMPERATURE AND HUMIDITY ENVIRONMENT
FOR DIMENSIONAL MEASUREMENT

ANSI B89.6.2–1973

AMERICAN NATIONAL STANDARD

TEMPERATURE AND HUMIDITY ENVIRONMENT FOR DIMENSIONAL MEASUREMENT

1. SCOPE AND INTENT

This standard is intended to fill industry's need for standardized methods of:

a. Describing and testing temperature-controlled environments for dimensional measurements, and

b. Assuring itself that temperature control is adequate for the calibration of measuring equipment, as well as the manufacture and acceptance of workpieces.

2. REFERENCED DOCUMENTS

2.1 Standards and Specifications

This standard has been coordinated insofar as possible with the following standards and specifications. Unless stated otherwise, the latest issue is implied.

2.1.1 Governmental

a. MIL-C-45662A–Calibration System Requirements

b. MIL-HDBK-52–Evaluation of Contractor's Calibration System

c. MIL-Q-9858A–Quality Program Requirements

d. Fed. Std. #209–Clean Room and Work Station Requirements, Controlled Environment.

2.1.2 Non-governmental

a. Standards of the American National Standards Institute (ANSI), formerly United States of America Standards Institute (USASI),

b. Standards of the American Society for Testing and Materials (ASTM),

c. Standards of the Society of Automotive Engineers, Inc. (SAE),

d. Recommendation R1–Standard Reference Temperature for Industrial Length Measurements, International Organization for Standardization (ISO).

2.2 Other Publications

a. ASHRAE–Handbook of Fundamentals published by the American Society of Heating, Refrigeration, and Air-Conditioning Engineers, 345 East 47th Street, New York, New York 10017

3. DEFINITIONS

3.1 Average Coefficient of Expansion

The average coefficient of expansion of a body over the range of temperature from 68° F (20° C) to t is defined as the ratio of the fractional change of length of the body to the change in temperature.

Fractional change of length is based on the length of the body at 68° F (20° C).

$$\alpha(68, t) = \frac{L_t - L_{68}}{L_{68}\,(t - 68)} \qquad (1)$$

Hereinafter the term "coefficient of expansion" shall refer only to the average value over a range from 68 F (20 C) to another temperature, t.

3.2 Coefficient of Expansion

The true coefficient of expansion, α, at a temperature, t, of a body is the rate of change of length of the body with respect to temperature at the given temperature divided by the length at the given temperature.

$$\alpha = \frac{1}{L_t}\left(\frac{dL}{dt}\right)_t \qquad (2)$$

3.3 Comparator

Any device used to perform the comparison of the part and the master is called a comparator.

3.4 Differential Expansion

Differential expansion is defined as the difference between the expansion of the part and the expansion of the master from 68° F (20° C) to their time-mean temperatures at the time of the measurement.

3.5 Differential Response

Differential response is defined as the relative length variation between any two objects per unit sinusoidal environment temperature oscillation as a function of frequency of temperature oscillation.

Copyright ASME International
Provided by IHS under license with ASME
No reproduction or networking permitted without license from IHS
Not for Resale

3.6 Full-Scale Dilatometry

Full-scale dilatometry is a procedure for determining the average true coefficient of expansion of a workpiece.

3.7 Dimensional Response

Dimensional response is defined as the amplitude of absolute length variation of an object per unit of sinusoidal environment temperature oscillation as a function of the frequency of temperature oscillation.

3.8 Drift Test

An experiment conducted to determine the actual drift inherent in a measurement system under normal operating conditions is called a drift test. Since the usual method of monitoring the environment (see Definition 3.13) involves the correlation of one or more temperature recordings with drift, the test will usually consist of simultaneous recordings of drift and environmental temperatures. The recommended procedure for the conduct of a drift test is given in 20.3.1.

3.9 Master

The standard against which the desired dimension of the part is compared is called the master. The standard may be in the form of the wavelength of light, the length of a gage block, line standard, lead screw, etc.

3.10 Mastering

The action of nulling or setting a comparator with a master is called mastering.

3.11 Mastering Cycle Time

The time between successive masterings of the process is called the mastering cycle time of the process.

3.12 Measurement Cycle Time

The time between measuring and the previous mastering is called measurement cycle time.

3.13 Monitoring

To ensure the constancy of the Thermal Error Index (see 3.22), it will be necessary to monitor the process in such a way that significant changes in operating conditions are recognizable.

The recommended procedure is to establish a particular temperature recording station or stations which have a demonstrable correlation with the magnitude of the drift.

The temperature of the selected station should be recorded continuously during any measurement process to which the index is to be applied. If the recording shows a significant change of conditions, the index is null and void for that process, and a re-evaluation of the index should be conducted, or the conditions corrected to those for which the index applies.

In addition to continuous monitoring of environmental conditions, it is recommended that efforts be made to establish that the process is properly soaked out. This may be done by checking the temperature of all elements before and after the execution of the measurements.

3.14 Nominal Coefficient of Expansion

The estimate of the coefficient of expansion of a body shall be called the nominal coefficient of expansion. To distinguish this value from the average coefficient of expansion $\alpha\ (68, t)$ it shall be denoted by the symbol κ.

3.15 Nominal Differential Expansion*

The difference between the Nominal Expansion of the part and of the master is called the Nominal Differential Expansion:

$$\mathrm{NDE} = (\mathrm{NE})_{\mathrm{part}} - (\mathrm{NE})_{\mathrm{master}} . \qquad (3)$$

3.16 Nominal Expansion*

The estimate of the expansion of an object from 68° F to its time-mean temperature shall be called the Nominal Expansion, and it shall be determined from the following relationship:

$$\mathrm{NE} = \kappa\ (L)\ (t - 68) . \qquad (4)$$

3.17 Part or Workpiece

In every dimensional or geometric measurement process, there is usually some physical object for which a dimension is to be determined. This object is called the part or workpiece.

3.18 Soak Out

One of the characteristics of an object is that it has a thermal "memory". When a change in environment is experienced, such as occurs when an object is transported from one room to another, there will be some period of time before the object completely "forgets" about its previous environment and exhibits a response dependent only on its current environment. The time elapsed following a change in environment until the object is influenced only by the new environment is called soak out time. After soak

*These concepts are used in determining the Thermal Error Index in Section 6.

Copyright ASME International
Provided by IHS under license with ASME
No reproduction or networking permitted without license from IHS
Not for Resale

out, the object is said to be in equilibrium with the new environment. In cases where an environment is time variant, the response of the object is also a variable in time.

3.19 Temperature of a Body

3.19.1 Temperature at a Point. When discussing a body which does not have a single uniform temperature, it is necessary to refer in some manner to the distribution of temperature throughout the body. Temperature at a point in a body is assumed to be the temperature of a very small volume of the body centered at that point. The material of which the body is composed is assumed to form a continuum.

3.19.2 The Temperature of a Body. When the differences between the temperatures at all points in a body are negligible, the body is said to be at a uniform temperature. This temperature is then the temperature of the body.

3.19.3 Instantaneous Average Temperature of a Body. When the body is not at a uniform temperature at all points, but it is desirable to identify the thermal state of the body by a single temperature, the temperature which represents the total heat stored in the body may be used. When the body is homogeneous, this is called the average temperature of the body (This temperature is the average, over the volume of the body, of all point temperatures.).

3.19.4 Time-Mean Temperature of a Body. The average of the average temperature of a body, over a fixed period of time, is called the time-mean temperature of the body. The fixed period is selected as appropriate to the measurement problem.

3.20 Temperature Variation Error, TVE

An estimate of the maximum possible measurement error induced solely by deviation of the environment from average conditions is called the Temperature Variation Error. TVE is determined from the results of two drift tests, one of the master and comparator and the other of the part and the comparator.

3.21 Thermal Conductivity

Thermal conductivity is normally defined as the time rate of heat flow through unit area and unit thickness of a homogeneous material under steady conditions when a unit temperature gradient is maintained in the direction perpendicular to area. In this standard it is designated by K and has the units of BTU/hr ft^2 °F.

3.22 Thermal Error Index

The summation, without regard to sign, of the estimates of all thermally induced measurement errors, expressed as a percentage of the working tolerance (or total permissible error).

3.23 Thermal Expansion

The difference between the length (or volume) of a body at one temperature and its length (or volume) at another temperature is called the linear (or volumetric) thermal expansion of the body.

3.24 Thermally Induced Drift

Drift is defined as the differential movement of the part or the master and the comparator caused by the time variations in the thermal environment.

3.25 Time Constant of a Body

The time required for a physical quantity to change its initial (zero-time) magnitude by the factor $(1 - 1/e)$ when the physical quantity is varying as a function of time, $f(t)$ according to either the decreasing exponential function,

$$f(t) = e^{-kt},$$

or the increasing exponential function,

$$f(t) = 1 - e^{-kt},$$

when $k = 1/t$, it is called the time constant of the physical quantity. In this standard it is designated by τ.

Since e has the numeric value 2.71828---, the change in magnitude $(1 - 1/e)$ has the fractional value 0.63212---. Thus, after a time lapse of one time constant, starting at zero-time, the magnitude of the physical quantity will have changed approximately 63.2 percent.

The time constant of a body can be used as a measure of the response of the body to environmental temperature changes. It is the time required for a body to achieve approximately 63.2 percent of its total change after a sudden change to a new level in its environment.

3.26 Transducer Drift Check

An experiment conducted to determine the drift in a displacement transducer and its associated amplifiers and recorders when it is subjected to a thermal environment similar to that being evaluated by the drift test itself. The transducer drift is the sum of the "pure" amplifier drift and the effect of the environment on the transducer, amplifier, and so on. The transducer drift check is performed by blocking the transducer and observing the output over a period of

Copyright ASME International
Provided by IHS under license with ASME
No reproduction or networking permitted without license from IHS
Not for Resale

time at least as long as the duration of the drift test to be performed. Blocking a transducer involves making a transducer effectively indicate on its own frame, base, or cartridge. In the case of a cartridge-type gage head, this is accomplished by mounting a small cap over the end of the cartridge so the plunger registers against the inside of the cap. Finger-type gage heads can be blocked with similar devices. Care must be exercised to see that the blocking is done in such a manner that the influence of temperature on the blocking device is negligible.

3.27 Uncertainty of Nominal Coefficient of Expansion

The maximum possible percentage difference between the true coefficient of expansion, α, and the nominal coefficient of expansion shall be denoted by the symbol δ.

$$\delta = 100\,\frac{\alpha - \kappa}{\alpha}\ \% \qquad (5)$$

This value, like that of κ itself, must be an estimate. Various methods can be used to make this estimate. For example,

(a) The estimate may be based on the dispersion found among results of actual experiments conducted on a number of like objects;

(b) The estimate may be based on the dispersion found among published data.

Of the two possibilities given above, (a) is the recommended procedure.

Because the effects of inaccuracy of the estimate of the uncertainty are of second order, it is considered sufficient that good judgment be used.

3.28 Uncertainty of Nominal Differential Expansion

The sum of Uncertainties of Nominal Expansion of the part and master is called the Uncertainty of Nominal Differential Expansion.

$$\text{UNDE} = (\text{UNE})_{\text{part}} + (\text{UNE})_{\text{master}} \qquad (6)$$

3.29 Uncertainty of Nominal Expansion

The maximum difference between the true thermal expansion and the nominal expansion is called the Uncertainty of Nominal Expansion. It is determined from

$$\text{UNE} = \kappa L\,(t - 68)\,\left(\frac{\delta}{100}\right)\% \text{ *}. \qquad (7)$$

*See Equation 23, Paragraph 20.2 for possible revision.

4. GENERAL REQUIREMENTS

4.1 The methods of describing and testing temperature-controlled environments shall be in accordance with Section 5.

4.2 A calibration, part manufacture, or part acceptance procedure complies with this standard if it is carried out with all pertinent components of the measurement system at 68° F; or if it can be shown that the Thermal Error Index (as defined in Section 6) is a reasonable and acceptable percentage of the working tolerance.

5. DESCRIPTION AND TESTING OF ENVIRONMENT

In this section an environment is to be understood as a room, box or other enclosure through which a temperature-controlled fluid (liquid or gaseous) is circulated and which is intended to contain dimensional measurement apparatus.

5.1 Description of Environment

In the following paragraphs the essential properties of an environment are listed. These characteristics must be unequivocally specified.

5.1.1 Thermal Specifications. The following properties of a controlled environment must be specified.

5.1.1.1 Cooling Medium. The type of cooling medium is to be described in terms of its chemical composition and physical properties of viscosity, density, specific heat and thermal conductivity. When common substances such as ambient air or water are to be used, unless otherwise specified, their properties are to be assumed those given in standard tables.

Commercial fluids such as oils may be specified by manufacturer and type.

5.1.1.2 Flow Rate and Velocity. The flow rate of the cooling medium shall be specified in units of weight per unit time, volume per unit time, or changes per unit time. Velocity shall be specified in feet per unit time.

5.1.1.3 Ranges of Frequencies of Temperature Variation and Limit from Mean Temperature. These two properties are interrelated and cannot be specified separately. For example, in general, the higher the frequency the wider the permissible temperature excursions from the mean temperature in the cooling medium (see Section 10). Frequencies are to be specified in cycles per unit time, and limits from mean temperature in plus or minus (±) units Fahrenheit (units Celsius). Separate limit specifications may be applied to a number of frequency ranges.

Copyright ASME International
Provided by IHS under license with ASME
No reproduction or networking permitted without license from IHS
Not for Resale

5.1.1.4 Mean Temperature. The mean temperature shall be the time average temperature at a specified point (or time average of the average of temperatures at more than one specified point) within the boundaries of the environment. A period of time over which the time average is to be computed shall be specified.

5.1.1.5 Gradients. Within the working volume of the environment, maximum steady-state temperature differences are to be specified. The specification can take one or both of two forms:

(a) "Worst case" maximum temperature difference in the cooling medium between any two points within the specified boundaries of the environment;

(b) Maximum rate of change of temperature along one or more specified directions within the specified boundaries.

Specifications can be applied to sub-boundaries, or volumes within volumes.

Each such specification should be qualified as to the conditions of acceptance testing, e.g., whether or not equipment and/or personnel are to be within the boundaries during the testing.

5.1.2 Humidity. Requirements for humidity control arise from desires to provide human comfort, to prevent deleterious effects of moisture such as corrosion of workpieces and measurement apparatus, and to maintain measurement accuracy of workpieces that are dimensionally sensitive to moisture (for example, certain hygroscopic materials). Specifications for humidity control shall be consistent with the practices established by the American Society of Heating, Refrigeration and Air-Conditioning Engineers (ASHRAE).

5.1.3 Maintainability. Requirements shall be specified governing the maintenance of performance in accordance with the above requirements in order that deterioration of the environment with time, due to the reduction of control efficiency, can be held within acceptable limits by implementation of established operating and maintenance procedures.

5.2 Testing of Environments

5.2.1 Thermal Specifications

5.2.1.1 Cooling Medium. When a cooling medium other than air or water is to be supplied as a part of the environment, its thermal properties must be qualified. The standard test methods listed here may be used to determine the required properties. The list is not intended to be exhaustive, but is only representative of the many standard procedures available.

5.2.1.1.1 Viscosity

ASTM D445-65 – Viscosity of Transparent and Opaque Liquids

ASTM D1545-63 – Viscosity of Transparent Liquids by Bubble Time Method

5.2.1.1.2 Density (Specific Gravity)

ASTM D941-55 (Reapproved 1968)–Density and Specific Gravity of Liquids by Lipkin Bicapillary Pycnometer

ASTM D1298-67 – Density, Specific Gravity or API Gravity of Crude Petroleum and Liquid Petroleum Products by Hydrometer Method

5.2.1.1.3 Thermal Conductivity

ASTM D2717-68T–Thermal Conductivity of Liquids

5.2.1.2 Flow Rate and Velocity

5.2.1.2.1 Flow Rate

ASTM D2458-69 – Flow Measurement of Water by the Venturi Meter Tube

ISO R541-1967 – Measurement of Fluid Flow by Means of Orifice Plates and Nozzles

5.2.1.2.2 Velocity

ASHRAE Handbook lists several accepted test methods.

5.2.1.3 Ranges of Frequencies of Temperature Variation and Limits from Mean Temperature. Limits of variation from mean temperature in the cooling medium at any specified point or points within the specified boundaries is to be determined by use of a sensitive recording thermometer. The time constant of this instrument is to be no more than one-fifth (1/5) of the period of the shortest cycle period (highest frequency) of interest; and its resolution is to be at least one-tenth (1/10) of the smallest amplitude of specified temperature variation.

The temperature recording duration shall be a minimum of 24 hours and should be as long as the representative work cycle (e.g., a week). The test should be performed under worst-case conditions (i.e., hottest day of year and coldest day of year).

The maximum peak-to-valley temperature variation is to be determined from the recorded data for every discernible frequency component. Isolated disturbances, i.e., single "spikes", are to be regarded as a component of the appropriate frequency.

Copyright ASME International
Provided by IHS under license with ASME
No reproduction or networking permitted without license from IHS
Not for Resale

Limits from mean for each frequency component are to be calculated as one-half (½) of the observed peak-to-valley excursion.

5.2.1.4 Mean Temperatures. A thermometer that has been calibrated by comparison with a standard platinum-resistance thermometer in the specified cooling medium is to be used to determine mean temperature. A recording thermometer whose output is averaged over the test period is preferred. However, a thermometer with a large time constant can be used if it is read at a frequency corresponding to one-half (½) of its time constant over the test period and all such readings averaged.

The resolution of the test thermometer shall be one-tenth (1/10) of the specified tolerance for the mean temperature. Also, the test thermometer should be standardized or calibrated so that in use it would indicate temperatures with an inaccuracy no worse than one-fourth (¼) of the specified tolerance for the mean temperature.

5.2.1.5 Gradients. If a "worst case" specification is to be administered, the locations of the temperature sensors are to be clearly specified.

If a maximum rate of change of temperature per unit length in a given direction or directions is to be administered, a grid pattern shall be established to define the locations of temperature sensors. In the case of room, box, and tank enclosures, that fraction of the total volume immediately adjacent to the enclosure walls is to be excluded from the grid pattern. Unless otherwise specified, for an enclosure that is empty, does not contain furniture, personnel, and equipment other than that used in the performance of the test, the excepted volumes shall be those obtained by reducing each dimension by 10 percent. For example, a 10′ x 10′ x 10′ room shall be reduced to 9′ x 9′ x 9′, the excluded volume being that contained within 6″ from the walls, ceiling, and floor.

If the specification calls for testing with equipment or personnel in the enclosure, the specification shall include a description of excluded areas or volumes adjacent to such personnel or objects.

Testing shall be performed over a representative work period.

5.2.2 Humidity. Humidity in the controlled environment is to be measured by any means having sufficient accuracy to satisfy the design specifications.

A sling psychrometer provides an economical and convenient way to monitor humidity on a periodic basis.

6. ASSURANCE OF ADEQUACY OF ENVIRONMENTAL CONTROL—THERMAL ERROR INDEX

In the buying and selling of goods and services, it is common practice that the buyer requests the seller to produce evidence of his ability to satisfy specifications. Most questions of metrological capability can be satisfied by means of available certification services, e.g., gage block calibration by a competent agency. In the special case of thermal effects errors, it is some times possible for the seller to meet the buyer's requirements by showing that work is to be done in an environment of a description acceptable to the buyer. In general, however, the variety of gages, workpieces, and measurement procedures that is found in practice precludes having all requirements met by even a small choice of standard environment descriptions.

The purpose of this section of the standard is to set forth a procedure for the assessment of the maximum possible measurement error due to all thermal effects. Basically, this procedure consists of computing estimates of possible error, taking into account uncertainties involved in the computations, and experimentally determining other error components. Summing all component error estimations gives an estimate of the over-all maximum possible error. Dividing this number by the total permissible error from all sources (working tolerance) gives an index of merit (Thermal Error Index) that can be used for the administration of environment quality control requirements.

In the following paragraphs, the standard procedure for computing the Thermal Error Index is described. Only the most significant components of error are considered. Approximate methods of error estimation are used. Section 20 of the Appendix includes a more thorough discussion of the methods of error estimation and possible means of improving the accuracy of the estimates. However, the following are the standard procedures.

6.1 Consequences of Environment Mean Temperature Other than 68° F (20° C)

6.1.1 Length Measurements

6.1.1.1 Nominal Expansion, NE. Assuming that an object in a convective environment has a uniform temperature equal to the environment mean temperature in its immediate vicinity, its Nominal Expansion is estimated by

$$NE = \kappa\ (L)\ (t - 68). \qquad (8)$$

6.1.1.2 Nominal Differential Expansion, NDE. The difference between the Nominal Expansion of the part

Copyright ASME International
Provided by IHS under license with ASME
No reproduction or networking permitted without license from IHS
Not for Resale

and the master is called the Nominal Differential Expansion.

$$NDE = (NE)_{part} - (NE)_{master} \quad (9)$$

6.1.2 Measurements Other than Length. In cases of measurements other than length, where a standard computational method is not given, the estimation of the consequences of environment mean temperatures other than 68° F (20° C) shall be made according to formulae appropriate to the specific case, if possible. An example is given in Section 20 of the Appendix.

Satisfactory formulae with which to carry out the intent of this section are not always available because of insufficient technical knowledge of each specific case.

6.2 Consequences of Uncertainties of Error Computations

6.2.1 Length Measurement

6.2.1.1 Uncertainty of Nominal Expansion, UNE. The Uncertainty of Nominal Expansion is

$$UNE = \kappa\,(\delta)\,(L)\,(t - 68)/100\%^{*} \quad (10)$$

where t is the worst-case (greatest difference from 68) measured temperature of the object (part or master).

*Rearrangement of Equation 7, Paragraph 3.29.

The fact that it is mandatory to make use of directly measured temperatures in the calculation of Uncertainty of Nominal Expansion means that the intent of Section 6.4 is automatically satisfied for the case of length measurements.

6.2.1.2 Uncertainty of Nominal Differential Expansion, UNDE. The sum of the Uncertainties of Nominal Expansion of the part and master is called the Uncertainty of Nominal Differential Expansion.

6.2.2 Measurements Other than Length. In cases of measurements other than length, where a standard computational method is not given, an estimation of the possible consequences of the uncertainties of coefficients of expansion and temperature measurements shall be made according to formulae appropriate to the specific case if possible. An example is given in Section 20 of the Appendix.

Satisfactory formulae with which to carry out the intent of this section are not always available because of insufficient technical knowledge of each specific case.

6.3 Consequences of Time Variation of Temperature Length Measurements, Temperature Variation Error, TVE

The maximum observed or recorded thermal drift during either part/comparator or master/comparator drift test (see Appendix), whichever gives the larger value, during a period of time corresponding to the measurement cycle is called the Temperature Variation Error.

6.4 Consequences of Gradients in Environment Temperature

In some measurements, gradients in environment temperature have a resultant error effect that is distinct from those described in the preceding paragraphs and which is significant enough to be given special consideration. For example, in the use of surface plates the consequences of an environment mean temperature other than 68° F (20° C) are insignificant provided the material of the surface plate is sufficiently homogeneous with respect to thermal expansion properties. However, the control of temperature differences between the top and bottom of the surface plate is of prime importance.

No general formulae can be given for the estimation of gradient temperature effects.

6.5 Thermal Error Index, TEI

The sum of all the approximate thermal effects error components from Paragraphs 6.1, 6.2, 6.3, and 6.4, where such paragraphs apply, expressed as a percentage of the total permissible error from all sources is called the Thermal Error Index.

For length measurements,

$$TEI = \frac{NDE + UNDE + TVE}{\text{Total permissible error}} \times 100\% \quad (11)$$

if no correction for differential expansion is attempted, and

$$TEI = \frac{UNDE + TVE}{\text{Total permissible error}} \times 100\% \quad (12)$$

if a correction for differential expansion is computed and applied in the measurement procedure.

Copyright ASME International
Provided by IHS under license with ASME
No reproduction or networking permitted without license from IHS
Not for Resale

APPENDIX

Historical Background of Standard Temperatures for Dimensional Standards[1]

The presently recognized standard temperature of 20° Celsius (68° Fahrenheit) was preceded by at least two others; namely, 0° Celsius (32° Fahrenheit), the temperature of melting ice, and 16-2/3° Celsius (62° Fahrenheit) which historically, at least, appears to have been the earliest.

Zero Celsius was the temperature adopted by the International Congress for Weights and Measures at Paris in 1889 at which the platinum-iridium bar, maintained at the International Bureau of Weights and Measures at Sevres, France, represented the meter exactly. However, its length at 20° Celsius had been carefully determined and for many years the comparisons of the various national standard meter bars with the international standard bar were made at 20° Celsius.

France, however, continued to use 0° Celsius as the standard temperature for length standards and gages until 1931, when 20° Celsius was adopted internationally.

Sixteen two-thirds° Celsius (62° Fahrenheit) was long recognized as the standard temperature for dimensional standards in Great Britain, dating back to at least 1831. Like France, Great Britain switched to 20° Celsius in 1931.

As early as 1898-99, C. E. Johansson of Sweden considered that the measurements given for his measuring instruments should apply at 19 or 20° Celsius. Since he found the usual temperature was between 15 and 25° Celsius, he took the mean value, 20° Celsius, as the temperature easiest to maintain and generally prevailing in daily workshop practice.

About 1903, Johansson had a nominally 100-millimeter rod measured by the International Bureau, which stated that the rod was 100 millimeters at 20.63° Celsius. With this information, Johansson made a new rod 0.0007 millimeters longer than the first so that it would be of correct length at 20° Celsius. This rod was then used in subdividing lengths to produce a set of gage blocks in various series.

From this beginning, the use of 20° Celsius as a standard temperature grew until in April 1931 the International Committee of Weights and Measures adopted a resolution that, in the future, the temperature of 20° Celsius (68° Fahrenheit) should be universally adopted as the normal temperature of adjustment for all industrial standards of length. Consequently, most of the nations of the world adopted this temperature as their standard for length adjustments. Thereafter, standards of length were adjusted to be nominally correct at 20° Celsius and manufacturers of gage blocks, end standards, scales, tapes, fixed dimensional gages, lead screws, etc. adjusted their manufacturing methods so these devices would be nominally correct at 20° Celsius.

In an article by Peters and Boyd of the National Bureau of Standards published in 1920[2] we find the statement, "The temperature at which the actual length of the gage equals the nominal length must, therefore, be specified and is usually taken as 20°C or 68°F."

The National Bureau of Standards installed its first constant-temperature (20° Celsius) room for calibrating gage blocks and other dimensional standards in 1924. Johansson, himself, was responsible for the first industrial room, at the Ford Motor Company, in 1926.

Twenty Celsius thereafter became so generally used that Recommendation No. 1 of the International Organization for Standardization, issued in 1954 promulgated its use among the 40 participating countries.

Therefore, since at least as far back as 1912 when it was recorded that Johansson was making his gage blocks for America on the basis of 1 inch equals 25.4 millimeters and at a temperature of 20° Celsius, millions of items such as gage blocks, end standards, micrometers, dimensional gages and products off of machines having lead screws, have been manufactured to be nominally correct at 20° Celsius.

[1] This information was taken, in part, from unpublished notes of Irvin H. Fullmer, former Chief of the Engineering Metrology Section, The National Bureau of Standards.

[2] "The Calibration and Dimensional Changes of Precision Gage Blocks," C. G. Peters and H. S. Boyd, American Machinist, September 30 and October 7, 1920.

Copyright ASME International
Provided by IHS under license with ASME
No reproduction or networking permitted without license from IHS
Not for Resale

The argument frequently advanced that measurements can be made at any temperature and corrected to 20° C (68° F) by applying corrections based on the various coefficients of thermal expansions is valid only if the coefficients are known with sufficient accuracy. The importance of this was known at least forty years ago when, in the paper by Peters and Boyd of the NBS, referenced above, this statement was made.

> "Another property which must be recognized when considering true accurate length of gages is the thermal expansion of the material. A 1-inch steel gage (block) increases in length about 0.000 013 inches for every degree C (Celsius) rise in temperature. The temperature at which the actual length of the gage equals the nominal length must therefore be specified and is usually taken as 20°C or 68°F. At 25°C the length of a gage which is one inch at 20°C is about 1.000 065 inches. If a gage be measured at the higher temperature its length at 20°C may be computed if the expansion coefficient is known. If higher precision is desired, it is not good policy to use expansion coefficients given in tables because our measurements show that the expansion coefficients of steel may vary from 0.000 0105 to 0.000 0135 depending on its hardness and composition.
>
> This variation would permit an unknown steel gage that agrees exactly with a standard at 25°C to differ from it by more than 0.000 01 inch at 20°C. If the unknown piece that is being measured is brass or some other material having an expansion coefficient that differs greatly from that of the standard the effect of temperature change is augmented. From these considerations it is evident that to measure or use gages with an accuracy in the millionth place, the coefficient of expansion of the material must be accurately known, and also temperature controlled and measured to at least 0.1°C."

A 1-inch micrometer caliper is required to have a maximum error in indicated reading not exceeding 0.000 1 inch and a 12-inch micrometer caliper not exceeding 0.000 3 inch. If the standard temperature were 23° C (73.4° F), the existing 1-inch micrometers would be in error by about one-third of their tolerance while the 12-inch micrometers would be in error by about one and one-third times the tolerance.

An indication of the impact on the users of the thousands of precision machine tools using lead screws presently in existence can be made by considering the case of the standard leading screw lathe in use at the National Physical Laboratory in Great Britain. The 60 inch traverse of its lead screw is correct to within 0.000 10 inches at 68° F. At 73.4° F an additional error of 0.000 21 inches would be introduced, for a total error of about 0.000 31 inches.

In 1952, Dr. F. H. Rolt, Superintendent of Metrology at the National Physical Laboratory had this to say about Great Britain's change from 16-2/3° C to 20° in 1931:

> "Previous to 1931, the standard temperature for engineering measurements (the temperature at which standard length gages and other gages are adjusted to size) was 62°F (16-2/3°C) in Great Britain, 0°C in France and 20°C in some other European countries and the United States. This confused state of affairs was abolished in April 1931 when the International Committee of Weights and Measures adopted a resolution that, in future, the temperature of 20°C (68°F) should be universally adopted as the normal temperature of adjustment for all industrial standards of length. This change was supported by the British Standards Institution and put into effect by the National Physical Laboratory at the beginning of 1932. It amounted to a change of approximately four and a half ten-thousandths in the length of a 12-inch gage and pro-rata for other lengths. In other words, a 12-inch gage which had been true to size at the old temperature of 62°F had to be actually shortened by closely 0.000 45 inches to bring it true to size at the new temperature of 20°C.
>
> British industry weathered this change without much trouble 20 years ago, but with the general all-round improvement in accuracy in latter years, to effect a change of that magnitude today would bring quite a number of difficulties in its train."[3]

For many years, "°C" has stood for "degrees centigrade," the well established temperature scale devised by the Swedish Astronomer Anders Celsius, 1701 to 1744. In keeping with the practice of honoring certain individuals who have made significant contributions to our scientific knowledge and development, by renaming units after them (e.g., "Hertz" for "cycles per second"), the use of the word "Celsius" over "centigrade" is now to be preferred. It is a fortunate coincidence that both begin with the letter "C".

[3] "The Development of Engineering Metrology," by F. H. Rolt, Institute of Production Engineers, 1, 1952.

Copyright ASME International
Provided by IHS under license with ASME
No reproduction or networking permitted without license from IHS
Not for Resale

10. ADVISORY INFORMATION PERTAINING TO DESCRIPTION OF ENVIRONMENTS

10.1 Description of Environments

10.1.1 Thermal Guidelines

10.1.1.1 Cooling Medium. For most conventional metrology work, the appropriate cooling medium will be air and the enclosure will be a room, in a building, in which human beings are occupied in daily tasks. However, in some cases it is advisable to consider fluids other than air for the cooling medium.

Considerations that may have influence in choosing a fluid other than air for the cooling medium are

(a) Greater heat removal capacity,

(b) More accurate temperature sensing and control,

(c) Avoidance of contamination of parts, especially from oxidation.

Both (a) and (b) can result from using a liquid that has the greater effectiveness as a coolant. The effectiveness of a coolant is measured in terms of a film coefficient (h; Btu/hr-ft^2-°F). In a specific case of heat flow from a surface into a fluid, the film coefficient is a rather complicated function of fluid properties, flow velocity, and geometry. To simplify estimating the relative effectiveness, air and water have been chosen in Figure 1 as representative of all gaseous and liquid coolants respectively. Rough boundaries can be established for the film coefficients attainable for each of these coolants for natural and forced convection, as is shown by the vertical lines in Figure 1.

The expected film coefficient in slowly moving room air is about 1.0. This can be increased by increasing the velocity of the air up to a limit at about h = 10.0, which is approximately the lowest limit for

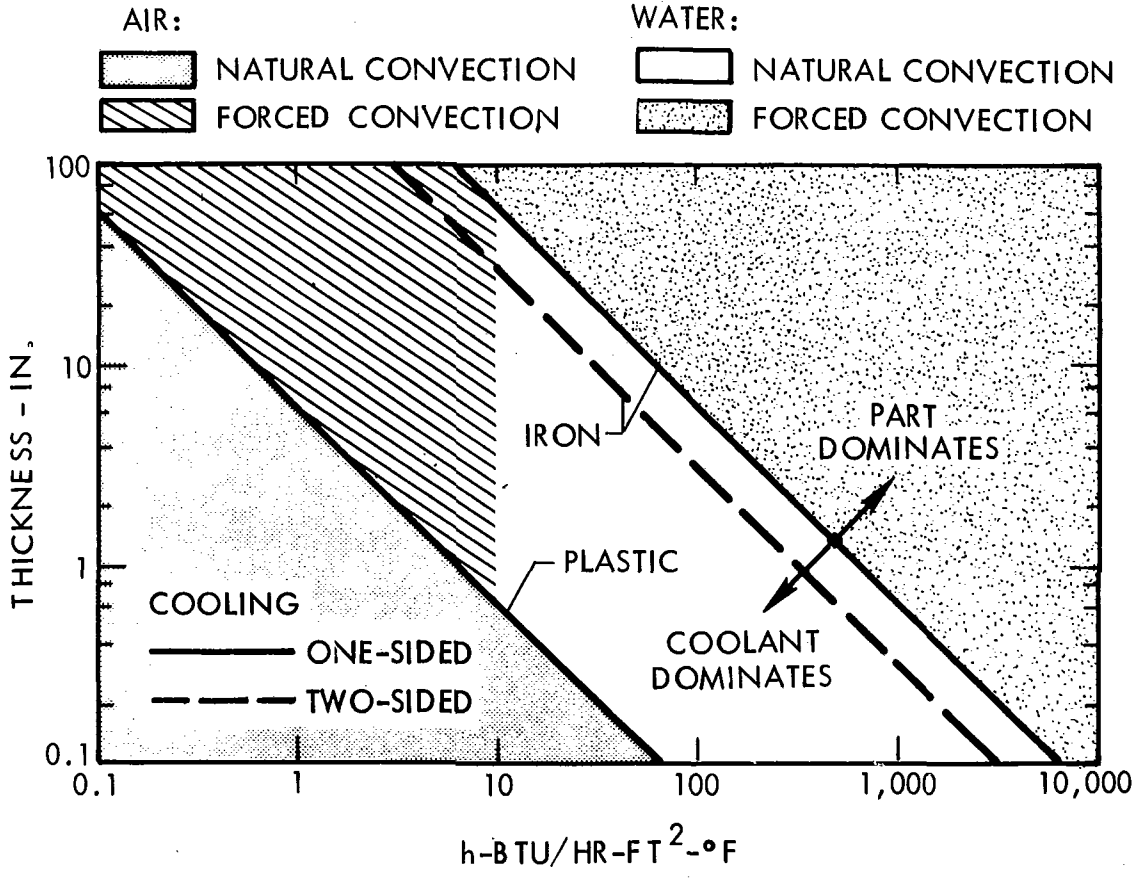

FIG. 1 Coolant-effectiveness chart for air versus water in natural and forced convection for material thickness varying from 0.1 to 100 in. The solid lines separate regions of part and coolant dominance for iron and a typical plastic. A condition within the area of coolant dominance indicates that improvement in the control of the part temperature can be achieved by increasing the flow or changing the coolant.

Copyright ASME International
Provided by IHS under license with ASME
No reproduction or networking permitted without license from IHS

Not for Resale

water in natural convection. Water in forced convection has a potential film coefficient of several hundred times that of room air.

The total resistance to heat flow from a solid wall into a fluid coolant includes the thermal resistance of the wall material:

$$R = \frac{1}{A}\frac{1}{h} + \frac{t}{2K} \qquad (13)$$

for a wall cooled on both sides and heated at midplane; and

$$R = \frac{1}{A}\frac{1}{h} + \frac{t}{K} \qquad (14)$$

for a wall heated on one surface and cooled on the other.

The point at which an increase in the film coefficient begins to produce diminishing returns, is where the internal and external resistances are equal. The diagonal lines on the chart show the boundaries of this effect for different wall materials and one-sided and two-sided cooling. The chart shows that for one-sided cooling of iron, the forced water convection is fully effective for wall thicknesses well over 1 inch; while, for plastics, forced water convection is less effective because of the dominance of internal resistance for much thinner sections.

10.1.1.2 Flow Rate and Velocity. The flow rate of the cooling medium is of prime importance in the control of frequency of temperature variation, and temperature gradients. Frequency of temperature variation in an artificially controlled environment is related to lags and delays in the feedback control system and, thus, to flow rate and the distance between temperature sensor and the heating and cooling surfaces. Gradients are related to the flow rate, the specific heat of the cooling medium and the magnitude of heat loads, as well as the distribution of the heat sources in contact with the flow.

In general, the higher the flow rate the higher the frequency of temperature variation and the smaller the temperature gradients. In addition, the higher the flow rate the higher the velocity of the cooling medium. This can have both beneficial and detrimental effects.

The beneficial effect of higher velocity is higher film coefficients. With higher film coefficients, a smaller temperature difference is required to remove heat from the surface of an object. This means that objects, with either internal heat sources (e.g., motors inside machine frames) or receiving heat by radiation (e.g., from electrical lights) will have temperatures more nearly equal to that of the cooling medium if the velocity is increased.

The detrimental effect is a tendency to discomfort human personnel. Where human operators are expected to work in rapidly moving air, the permissible velocity is limited because the human response to a given dry-bulb temperature depends on the air velocity and the relative humidity. At a dry-bulb temperature of 68° F, a relative humidity of 50 percent, and a velocity of 100 fpm, the temperature is felt as 63° F, and as 58° F for 400 fpm (see Figures 2 and 3). The maximum permissible velocity for human comfort in a 68° F, 50 percent R.H., room is about 25 fpm.

High precision metrology laboratory air velocities range from 6 to 20 fpm.

10.1.1.3 Ranges of Frequencies of Temperature Variation and Limits from Mean. The dimensional response of an object to ambient temperature variation depends on its length, coefficient of expansion, and time constant (see 3.2.5). The time constant of an object can be estimated from

$$\text{time constant} = \tau = \frac{CV}{hA} \qquad (15)$$

where

V = volume, cu. ft.

A = surface area, sq. ft.

h = film coefficient, Btu/hr. ft.^{2} °F

C = thermal capacitance, Btu/°F ft^3.

Values for C are approximate

Iron, Steel ~ 54

Aluminum ~ 36

Brass ~ 48.

Example:

A steel gage block 1 inch square in cross-section and 10 inches long, in natural convection (estimate $h = 2$)

$$\tau = \frac{54\,(10)}{2\,(42)\,(12)} = 0.53 \text{ hr.}$$

This time constant is the time the gage block would take to reach 63.2 percent of its total change (see 3.2.5). For example, it would be the time required for the object to change temperature 0.632 degrees after a step change in environment temperature of one degree.

For a 1-degree step in temperature in the air around the gage block of the above example, the gage eventually changes length approximately 60

Copyright ASME International
Provided by IHS under license with ASME
No reproduction or networking permitted without license from IHS
Not for Resale

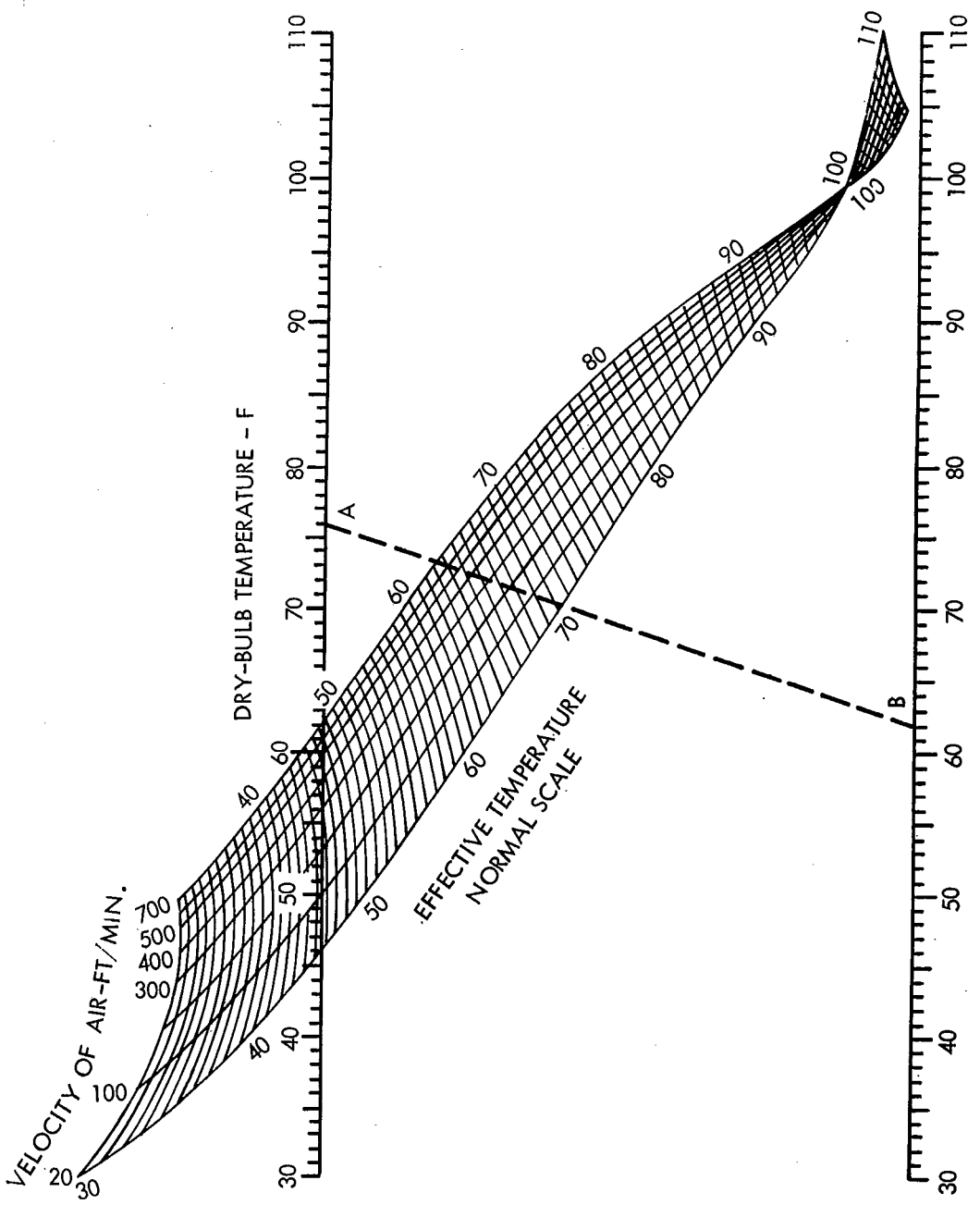

FIG. 2 Chart for determining effective temperature for sedentary individuals, normally clothed, from measurements of dry-bulb temperature, wet-bulb temperature and velocity of air

Copyright ASME International
Provided by IHS under license with ASME
No reproduction or networking permitted without license from IHS

Not for Resale

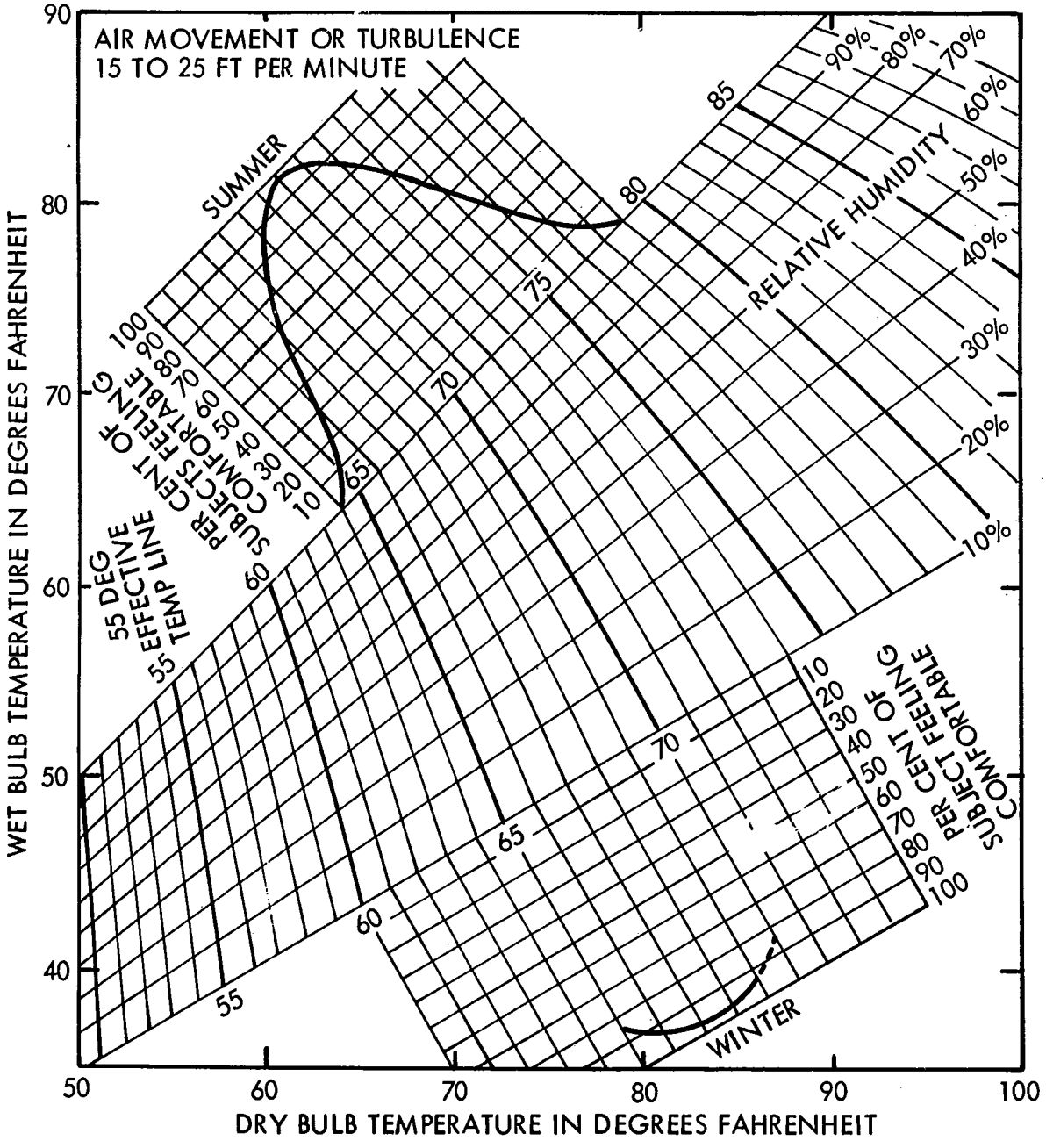

FIG. 3 Still-air comfort chart of the American Society of Heating, Refrigerating and Air-Conditioning Engineers

Copyright ASME International
Provided by IHS under license with ASME
No reproduction or networking permitted without license from IHS
Not for Resale

microinches. But it takes 0.53 hour (32 minutes) to change 38 microinches. This slowness of response, or thermal inertia, is important to the specification of environments, because it means that high frequency temperature variation is tolerable. The higher the frequency, the more tolerable it is.

Experience shows that most machinery, instrument stands, etc., have a limited range of volume to surface area ratio. Quite good results are often achieved with a frequency of temperature variation (in air) of 15 to 60 cycles per hour and an amplitude of 1 degree Fahrenheit. For the gage block in the above example, this temperature variation would cause a length variation of less than 1 microinch.

Like those of high frequency temperature variations, the effects of very low frequency temperature variations are not significant when the part and master have closely similar dimensional response.

The most fortunate case possible is that in which the part, master, and comparator (see Section 20) all have the same dimensional response characteristics. Then no temperature variation effect is significant. In general, however, there exists an upper and lower limit of frequency between which is a frequency of maximum differential response. Unfortunately, it is not uncommon that gaging systems have their maximum differential response at a frequency close to the natural 24-hour day/night cycle period.

Consequently, it is usually advisable to specify the tolerance-to-temperature variation in terms of allowable deviations from mean temperature which vary according to the frequency. Closer limits should be applied to low frequency components, and wider limits may be permitted for high frequency components.

10.1.1.4 Mean Temperature. Selection of a mean environmental temperature affects the cost of refrigeration and heating equipment, insulation, and flow distribution.

Operation at a temperature other than 68° F (20° C) entails consequences in the form of potential errors of measurement that must be carefully evaluated. Evaluation procedures are described in Section 20.

The most common objection to operating a room enclosure at 68° F, other than the cost of the air conditioning system, is a possible discomfort to personnel. As discussed in Section 10.1.1.2, a high air velocity can cause a sensation of much lower temperatures and result in complaints. In order to maintain human comfort without a requirement for special clothing, the velocities to which personnel are subjected should be less than 20 fpm to avoid the sensation of drafts. Conventional registers, at which the velocities may be 800 fpm or more are not satisfactory. Large inlet and outflow areas are recommended. Full-flow ceilings are used successfully to simultaneously provide high flow rate and low velocity.

In cases where the needs of measuring equipment (68° F) and human personnel (low velocity) cannot be satisfied simultaneously, it is recommended that the equipment environment and human environment be separated. Use of special air-flow boxes, liquid baths, or localized high-velocity air showers have been used successfully for this purpose.

10.1.1.5 Gradients. Gradients are the most difficult of all non-ideal temperature conditions to assess for possible error effects. The existence of gradients, of course, implies that portions of the environment will not be at the same mean temperature so that the consequences of mean temperatures other than 68° F (20° C) will be different in different locations in a room. Movement of equipment or workpieces from one area to another will result in a change in the error pattern.

Machinery is affected by gradients in a variety of ways. For example, a machine with a high vertical column (z-motion) where the z-motion is controlled by a lead screw will have a progressive error if there is a high vertical temperature gradient. In addition, if the vertical slide carries a long cantilever arm, the arm will undergo a transient change of length when raised or lowered.

Surface plates are affected by vertical gradients in that a temperature difference between the top and bottom of the plate will cause the plate to bend. For solid surface plates, the amount of bending or out-of-flatness, δ, is calculated by using the following formula:

$$\delta \cong \frac{\overline{L^2}}{8R} = \frac{L^2 \kappa \Delta T}{H\left(1 - \kappa \frac{\Delta T}{2}\right)} \quad \ldots . \qquad (16)$$

where

L = length of the surface plate

H = height or thickness of the surface plate

T_u = upper surface temperature
T_1 = lower surface temperature
} $\Delta T = T_u - T_1$

κ = coefficient of linear thermal expansion

R = radius of curvature of the plate.

Machine bedways are similarly affected by both vertical and horizontal gradients which cause angular motions (pitch, roll and yaw).

Copyright ASME International
Provided by IHS under license with ASME
No reproduction or networking permitted without license from IHS
Not for Resale

Gradients occur because of heat sources that exist within the boundaries of the environment. For this reason, it is difficult to administer meaningful requirements by testing in the absence of equipment and personnel that shall exist under normal working conditions. The main sources of heat are the electrical lighting fixtures, electrical and electronic equipment, motors, and people. Room enclosures with only the electrical lighting fixtures present and operating have been tested with an observed gradient of less than 0.1° F per foot in any direction. However, the same room with equipment installed normally has gradients of over 0.2° F per foot and high gradients of several degrees per foot near the surfaces of surface plates, electronic cabinets, etc.

As mentioned in Section 10.1.1.2, increasing the flow rate will decrease the gradients. For example, surface plates are observed to have temperatures on the upper surfaces of 2° F or more above the local mean in a flow rate of 10 to 15 changes per hour and a 0.5° F or less in 100 changes per hour.

10.1.2 Humidity. In certain measurement systems, a significant error can occur if an incorrect value for humidity is used in computing a dimension. For example, in the measurement of the length of gage blocks by interferometry, a 10 percent relative humidity uncertainty will introduce an error of 0.1 microinch per inch of length. Therefore, in laboratories where these kinds of measurements are to be made, it is desirable to control (and measure) the humidity within close limits to keep this uncertainty small.

There are three basic requirements for humidity control:

(a) To provide human comfort;

(b) To prevent deleterious effects of moisture such as corrosion of workpieces and measurement apparatus, and;

(c) To maintain measurement accuracy of workpieces that are dimensionally sensitive to moisture.

A discussion of the latter requirement is felt to be beyond the scope of this standard since it would deal with parameters of materials that are not directly correlative with the guidelines for environmental control of dimensional metrology laboratories.

Requirements 1 and 2 are related, but are almost diametrically opposed. Consequently, there have been many suggestions given as to what limits, if any, should be placed on the range of relative humidities to be permitted in dimensional metrology enclosures.

For maximum protection against corrosion of ferrous components of measuring instruments, humidity should be maintained at very low levels. However, for the maximum comfort of personnel in a laboratory where the dry bulb temperature is maintained at 68° F, the humidity should be kept at a high level. The relative humidity recommended is a reasonable compromise between these two extremes.

Probably, the most frequently heard value for the upper limit is 45 percent relative humidity. A lower limit is then selected that is high enough to afford a certain degree of personal comfort, but low enough to not economically compromise the 45 percent upper limit.

What is frequently overlooked, however, is that relative humidity, in itself, is just one of the contributing factors to corrosion. Of almost equal importance are the constituents of the atmosphere, or cooling medium, in which the workpiece and measuring apparatus are placed. For example, the presence of certain hygroscopic salts in the air will either cause or accelerate the corrosion of iron exposed to the air even though the relative humidity is relatively low. A saturated solution of lithium chloride will stand in equilibrium with air having only a 12 percent relative humidity. Similarly, saturated solutions of either calcium chloride or magnesium chloride will stand in equilibrium with air having a relative humidity of 31 or 33 percent relatively. Yet iron exposed to air containing any of these salt solutions will corrode more rapidly than if they were not present. Again, iron exposed to air containing ordinary solutions of sea salts shows little corrosion at a relative humidity of 30 percent, but fairly rapid corrosion if the air has a relative humidity of 35 percent. Salts are not the only corrosion-accelerating agent in air, so far as iron is concerned. Small traces of sulphur dioxide (a common constituent of industrial and urban air) will accelerate corrosion in iron at ordinary temperatures and humidities.

Probably one of the greatest accelerators of corrosion in dimensional metrology laboratories is the perspiration residue deposited during handling. The chloride ion in the residue is probably the main accelerating agent, although the fatty acids will also be a factor.

Since iron, in some form, is the most common material found in the workpieces and measuring equipment in a dimensional metrology laboratory, the rest of this section will deal briefly with the role humidity plays in its corrosion.

Probably the most exhaustive and definitive laboratory studies on the atmospheric corrosion of metals were those reported by W. H. J. Vernon in England

Copyright ASME International
Provided by IHS under license with ASME
No reproduction or networking permitted without license from IHS
Not for Resale

shortly after World War I. Briefly stated, these studies showed that the rusting of iron in air was not necessarily associated with the dew-point as had been supposed; but instead, a profound increase in the rate of attack was identified with a critical humidity very considerably below saturation. In an ordinary room atmosphere of low relative humidity, the process of rusting is influenced entirely by the suspended particulate impurities in the atmosphere. Consequently, screening or protection of the surface from such matter could arrest, or even prevent rust. However, even in the case of screened or filtered air, a primary oxide film will form even with relatively low humidities. The so-called "critical humidity" values for iron are approximately 62 percent and 82 percent. These are the relative humidity values at which profound increases in corrosion occur. Vernon's studies showed a gradual increase in corrosion with increases in relative humidity from 0 percent to 99 percent.

Based on Vernon's studies of the atmospheric corrosion of metals and the studies conducted by, or for, the U.S. Navy on the long-term preservation of materials (Operation Mothball), it is generally accepted that there will be little or no destructive corrosion of metals if they are held at 30 percent relative humidity in a reasonably pure atmosphere, i.e., free of harmful particulate matter such as salts and sulphur dioxide. By using protective oils or greases on the base surfaces, iron can exist without further corrosion at a relative humidity of 45 percent, provided the surfaces to be protected are cleaned as thoroughly as possible to eliminate possible hygroscopic dirt particles before the protective coating is applied.

To reiterate, the presence of moisture is essential for natural corrosion to take place at normal temperatures; presence of hygroscopic matter on the surfaces can accelerate the normal rate of corrosion; and the presence of certain materials, such as salts, chloride ions, and fatty acids can precipitate corrosion at relative humidity levels well below saturation.

An upper limit of 45 percent relative humidity has been suggested for dimensional metrology laboratories provided, of course, that normally bare iron surfaces are clean and protected with some type of coating.

10.1.3 Maintainability. Operating and maintenance procedures must be promulgated that, if followed, will ensure maintaining the performance of the dimensional metrology enclosure within its specified design limits.

10.2 Testing

The purpose of this section is to give users of this standard some understanding of the practical problems that exist in the administration of the requirements outlined in Section 5. Wherever possible, specific procedural suggestions are made. However, a thorough discussion of every possible instrument or procedure that is available for the administration of each requirement is beyond the scope of this document.

It is strongly recommended that every specification include a description of the test procedure or instrument that is intended for the administration of each requirement. Section 2 of this document contains some of the more common sources of information on practical procedures and instrumentation.

10.2.1 Thermal Guidelines

10.2.1.1 Cooling Medium. Because this standard has been deliberately kept as general as possible in order to permit the use of a variety of cooling media, there is little that can be discussed here beyond that already presented in Section 5. The user of this standard is cautioned that the properties listed in Section 5 are only those that pertain to the thermal behavior of the cooling medium. For specific cases, other properties such as color, opacity, odor, toxicity, acidity, lubricity, etc. may be very important.

10.2.1.2 Flow Rate and Velocity. As mentioned in Section 10.1.1, air is the most widely used cooling medium in dimensional metrology laboratories or enclosures, although the possible use of a fluid medium in some enclosures cannot be overlooked.

When air is used as the cooling medium, there is a tendency to have it flow at relatively low rates to provide as high an effective temperature as possible for the occupants of the laboratory consistent with the 68° F design specification. This tendency, aside from the effect on the film coefficients discussed in Section 10.1.1.1 and 10.1.1.2, creates problems when measuring the air velocity. At velocities of 0 to 100 fpm, the flow pattern is frequently very unstable. As a result, the mass turbulence level may be of the same magnitude as the velocity. Consequently, it becomes imperative that any instrument used be properly calibrated, and the using personnel be aware of both the limitations of the instruments, and their operation. For example, several types of thermal anemometers (so-called hot-wire types) can be used in this range; but the accuracy of the measurements at the lower end could be questionable, even though the precision of the measurements is quite good. Another example, non-directional instruments are usually unable to distinguish between large-scale turbulence and the mass velocity of air. Tables 1 and 2 list various types of instruments commercially available to measure either flow rate or velocity.

Copyright ASME International
Provided by IHS under license with ASME
No reproduction or networking permitted without license from IHS
Not for Resale

Copyright ASME International
Provided by IHS under license with ASME
No reproduction or networking permitted without license from IHS

Table 1 Measurement of Velocity

No. Measurement Means	Application	Range, fpm	Precision	Limitations
1. Hot-wire anemometer	(a) Low air velocities; directional and non-directional available	5–1,000	1–20%	Accuracy of some types not good at lower end of range
	(b) High air velocities	up to 60,000	1–10%	
2. Kata thermometer	Low air velocities in rooms; non-directional	5–300	5–15%	Awkward to use; affected by radiation
3. Smoke puff or airborne solid	Low air velocities in rooms; highly directional	5–50	10–20%	Awkward to use but valuable in tracing air movement
4. Deflecting-vane type anemometer	Air velocities in rooms, at outlets, etc.; directional	30–24,000	5%	Not well suited for duct readings; needs periodic check calibration
5. Venturi-type multiplying Pitot tube	Low air velocities in rooms and ducts; directional	100–2,000 with micromanometer; 180–2,000 with draft gages	1–5%	Accuracy falls off at low end of range
6. Revolving-vane type anemometer	Moderate air velocities in ducts and rooms; somewhat directional	100–2,000	5–20%	Extremely subject to error with variations in velocities with space or time; easily damaged; needs periodic calibration
7. Cup Anemometer				
8. Pitot tube	Standard instrument for measurement of duct velocities and pressures	180–10,000 with micromanometer; 600–10,000 with draft gages; 10,000 up with manometer	1–5%	Accuracy falls off at low end of range
9. Impact tube and side-wall or other static tap	High velocities, small tubes and where air direction may be variable	120–10,000 with micromanometer; 600–10,000 with draft gages; 10,000 up with manometer	1–5%	Accuracy depends upon constancy of static pressure across stream section

Not for Resale

Copyright ASME International
Provided by IHS under license with ASME
No reproduction or networking permitted without license from IHS

Table 2 Measurement of Volume or Mass Flow Rate

No. Measurement Means	Application	Range	Precision	Limitations
1. Orifice and manometer	Flow through pipes, ducts and plenums—all fluids	Above Reynolds number of 5,000	1%	Coefficient and accuracy influenced by approach conditions
2. Nozzle and Manometer	Flow through pipes, ducts and plenums—all fluids	Above Reynolds number of 5,000	1%	Coefficient and accuracy influenced by approach conditions
3. Venturi tube and manometer	Same as 1 and 2 above but used where permissible pressure drop is limited	Above Reynolds number of 5,000	1%	Coefficient and accuracy influenced by approach conditions
4. Rotameters	Normally used for liquids	Any	1%	Must be calibrated for the liquid with which used
5. Turbine	Normally used for liquids	Any	0.5%	Utilizes electronic readout
6. Timing a given weight flow	Liquids only—used for calibrating other flow means	Any	0.1%	—
7. Displacement meter	Relatively small volume flow at high pressure drop	Relatively small volume flow at high pressure drop	0.2—2.0% depending on type	Some types require calibration
8. Gasometer or volume displacement	Short duration tests; used for calibrating other flow means	Total flow limited by available volume of containers	0.5—1.0%	—
9. Element of resistance to flow and manometer	Used for check where there is calibrated resistance element in the system	Lower limit set by readable pressure drop	1—5%	Secondary reading depends on accuracy of calibration
10. Thomas meter (temperature rise of steam due to electrical heating)	Where elaborate setup is justified by need for good accuracy	Any	1%	Uniform velocity, usually used with gases
11. Heat input and temperature change with steam or water coil	Check value in heater or cooler tests	Any	1—3%	—
12. Instrument for measuring point velocity	Primarily used in installed systems where no special provision for flow measurements have been made	Lower limit set by accuracy of velocity measurement	2—4%	Accuracy depends upon uniformity of flow and completeness of traverse

Not for Resale

The Reynold's number referred to in Table 2 is a dimensionless parameter used to designate the ratio of the inertia forces to the viscous forces in a fluid motion that occurs at the transition from laminar to turbulent flow.

Measurements made using the kinds of instruments shown in Tables 1 and 2 are frequently made either in the ducts conveying the air, or in close proximity to such ducts. It should be recognized, however, that this may not give a complete picture of the actual air changes in the room since the air leakage into the laboratory caused by wind or temperature differences are not indicated by these means. Consequently, if a more accurate determination of the total change time is required, it might be necessary to go to a measurement system employing a thermal conductivity comparator and a tracer gas. In this system, a known amount of a tracer gas (usually some percent of the total air volume) is released into the room and allowed to thoroughly mix with the air. As the release occurs, this mixture becomes diluted. The conductivity comparator is then used to measure the decrease in concentration at regular time intervals.

The infiltration can then be calculated from

$$C = C_o e^{-kt/v} \qquad (17)$$

where

C = concentration after t minutes, percent
C_o = initial tracer gas concentration, percent
k = infiltration rate, cubic feet per minute
v = volume of room, cubic feet
e = 2.718.

This infiltration rate can then be used to correct the flow rate yielded by using the more conventional instruments.

10.2.1.3 Ranges of Frequencies of Temperature Variation and Limits from Mean. The main factors to be considered in choosing an instrument or instruments with which to administer temperature variation requirements are the frequencies of interest and the cooling medium. The instrument chosen must have a sensing element with a time constant small enough that the highest frequency of interest is detected and displayed without significant attenuation or distortion.

One point frequently overlooked is that a sensing element may have a different time constant for each medium it is in.

Example:

Bare Thermistor
Time constant in air—3 minutes
Time constant in liquid—3 seconds

10.2.1.4 Mean Temperature. Mean temperature is not measured directly (see 5.1.1.4). However, the temperature sensor-recorder system used to measure the temperatures from which the mean temperature is calculated must have adequate sensitivity, precision, and accuracy and must be used properly so that the calculated mean temperature will fall within acceptable confidence limits.

10.2.1.5 Gradients. The effect of thermal gradients can best be measured by closely monitoring the temperature of the master, the part, and the comparator during the actual measurement and applying the necessary thermal differential corrections to the measurement results.

The composition and flow rate of the cooling medium should be monitored for continued conformance to design specifications.

10.2.2 Humidity. Humidity is to be measured by any method having sufficient sensitivity and accuracy to assure the basic design specifications are met.

10.3 Operation and Maintenance

10.3.1 Thermal Guidelines

10.3.1.1 Once the heat transfer into an enclosure has been established, it should hold fairly constant as long as the physical integrity of the enclosure is not disturbed. Some long-term shifts due to aging of the materials, such as the wall insulation, may be expected. Normally, however, this should not pose a serious threat.

Installation of heat-producing sources adjacent to the controlled enclosure should be avoided if at all possible because of the possible effect on the heat transfer. If a recalculation of the heat transfer should show a significant change that could affect the thermal stability in the enclosure, additional insulation may be required.

If the integrity of the enclosure is maintained and the condition of the filters, the lighting system, and the air-conditioning system is maintained at a sufficiently high level to minimize deviations in temperature, cooling medium flow and velocity, little else should be required.

10.3.1.2 Flow Rate and Velocity. Periodic maintenance of the cooling medium distribution system is normally sufficient to maintain the established cooling medium flow rates and velocities provided the layout of equipment in the enclosure has not been sufficiently rearranged, or new instruments have been added that could disrupt the initial cooling medium flow patterns.

Copyright ASME International
Provided by IHS under license with ASME
No reproduction or networking permitted without license from IHS
Not for Resale
PROBLEM HARD COPY

10.3.1.3 Ranges of Frequencies of Temperature and Variations and Limits from Mean. The only way for the accuracy and precision of the temperature sensing system to remain within the suggested limits is for a regularly scheduled standardization and/or calibration program to be established and followed.

A periodic maintenance program is recommended for the temperature control system for the enclosure to assure that the design criteria are satisfied.

10.3.1.4 Mean Temperature. If the procedures given in the other sections of 10.3.1 are followed, the established mean temperature should be maintained.

10.3.1.5 Gradients. Because of the difficulties encountered in establishing and maintaining thermal stability in a dimensional standards laboratory, a program of continued vigilance to ferret out causes of instability is strongly recommended. This is particularly important during the periods when measurements are actually being made.

10.3.2 Humidity. The specified humidity limits should be maintained by any suitable means.

20. ADVISORY INFORMATION PERTAINING TO THE ASSURANCE OF ADEQUACY OF ENVIRONMENTAL CONTROL

In this section it is assumed that the measuring equipment and the thermal environment exist, and that normal or expected operating conditions are in force. The object of the discussion is to describe the manner in which one goes about determining the extent of measurement errors resulting from non-ideal temperature conditions.

The ideas and methods described are those found in fairly common usage by metrologists everywhere. But, for the first time, these ideas and methods are unified and formally presented. Some of the concepts presented may at first appear strange and unrelated to previous experience. The 3-element system concept, for example, will probably fall in this category. However, with a little patient study, the concept will be seen to correspond to common notions, and its utility in a disciplined investigation will become clear.

The other notion that may appear to be new is that of the uncertainty of the coefficient of expansion.

Each of these concepts is examined and reduced to a practical procedure in the first four of the following paragraphs.

The last paragraph of this section is devoted to explaining the Thermal Error Index and its use.

20.1 Estimation of Consequences of Mean Environmental Temperatures Other than 68° F (20° C)

20.1.1 Length Measurements. The assessment of the consequences of temperatures other than 68° F (20° C) are easily obtained by means of equations that give the Nominal Differential Expansion in terms of the Nominal Expansions of the part and master.

$$\text{NDE} = (\text{NE})_p - (\text{NE})_m \tag{18}$$

and

$$\text{NE} = \kappa L\,(T - T_s). \tag{19}$$

Combining these equations, we get

$$\begin{aligned}\text{NDE} &= \kappa_p L\,(T_p - T_s) - \kappa_m L\,(T_m - T_s) \\ &= L\,[\kappa_p\,(T_p - T_s) - \kappa_m\,(T_m - T_s)] \ \ldots\end{aligned} \tag{20}$$

Assuming that the part and master both are at the mean temperature, $T_p = T_m = T_{me}$ (the only reasonable assumption unless thermometers are attached to both the part and master), we see that the error is reduced to insignificance if the coefficients of thermal expansion approach equality. And this is true even with a large deviation of the mean environmental temperature from 68° F (20° C).

Because the great majority of manufactured parts and gages are of ferrous materials having similar coefficients of expansion, many industries, particularly those where tolerances are in tens of thousandths of inches, have successfully functioned without concern over the effect of mean environmental temperature on manufacturing accuracy. In many such situations, an arbitrary insistence on 68° F (20° C) temperature control leads to unjustified increased cost of manufacture.

As tolerances become tighter, as the parts become bigger, and as the materials of parts and masters become more dissimilar, the consequences of mean environmental temperatures other than 68° F (20° C) become correspondingly greater. Here it is to be noted that in recognition of the possible consequences of mean environmental temperatures other than 68° F (20° C), it is not uncommon to find the following actions in use:

(a) Special gaging or masters made of nominally the same material as the parts;

(b) Computation of corrections which are applied to the indicated values of length. The required computation method is derived from Equation 23. The correction is set equal to the negative of the Nominal Differential Expansion.

$$\text{Correction} = -\text{NDE} \tag{21}$$

$$\text{Corrected Length} = \text{As-read Length} + \text{Correction}. \tag{22}$$

Copyright ASME International
Provided by IHS under license with ASME
No reproduction or networking permitted without license from IHS
Not for Resale

As the working tolerance decreases, both of these procedures fail to be satisfactory because of the magnitude of the Uncertainty of Nominal Differential Expansion (see 20.2).

20.1.2 Measurements Other than Length. Procedures and formulae for the assessment of the effects of mean environmental temperatures other than 68° F (20° C) as simple and straightforward as those presented in the preceding paragraph are not usually possible in cases other than length measurements.

For example, consider the case of an iron bedway casting of a machine. Because the casting may have both thick- and thin-walled sections, the physical composition of the material may not be homogeneous, resulting in a non-uniform coefficient of thermal expansion. The magnitude of such a variation in expansion coefficient may be as much as 5 percent. If the non-uniformity is distributed as a vertical gradient, raising or lowering the mean temperature will result in a bending like that produced by a vertical temperature gradient.

This effect is the same as that observed in the well-known bimetal strip, and can be called a "bimetal effect".

The bimetal effect in structures of nominally one material is relatively small compared with the effect of temperature gradients. For example, a base casting like that mentioned above would have to be subjected to a temperature offset of 20° F before the bending approaches that induced by an upper and lower surface temperature difference of only 1° F. However, in structures composed of two or more greatly dissimilar materials that are assembled at 68° F (20° C), the bimetal effect can be quite significant. In such cases the effect of mean temperatures other than 68° F (20° C) can be properly estimated only by taking into account the thermal stresses that exist.

Existence of severe bimetal effect can be avoided only by strict control at 68° F.

Evaluation of the effects of mean temperatures other than 68° F requires that the net effect of the distortions of both master and part be determined.

20.2 Consequences of Uncertainties of Computations

There are two kinds of systematic errors that occur when the effects of mean temperatures other than 68° F (20° C) are computed. They are the errors in the values of the temperatures and in the coefficients of thermal expansion that are used in the computations.

Values of temperatures used in computations can be in error because of defects in the instruments used in making the measurements or because of the location at which the measurement is made. For example, the thermometer used may be inaccurately calibrated or have a built-in source of error such as the self-heating effect found in resistance-bulb thermometers. Because of the self-heating effect, resistance-bulb thermometers can be very precisely calibrated in liquid baths and give erroneous readings on metal surfaces or in air because the heat transfer process is quite different in the different cases.

Location of the temperature-measuring probe is of significance because of the possible gradients. Use of room air temperature values may introduce errors of a degree or more. Readings of direct-contact probes are more reliable but are still subject to error because of gradients within the object whose temperature is being measured. An effective means of assessing the validity of a given location is to compare effects of several locations.

The approach taken in formulating the standard procedure for estimating the effects of Uncertainty of Nominal Differential Expansion is to require that part and master temperatures be measured to determine worst-case deviations from 68° F. This procedure, as noted in 6.2.1, for length measurements, takes into account the effects of gradients in the apparatus, as well as in the room in which it is located.

If part and master temperatures are not measured, the estimation of the consequences of uncertainties of computations must include consideration of the uncertainties in the temperatures used in computing the estimation of the effects of temperatures other than 68° F. Equation 7 is modified as follows:

$$\text{UNE} = (\delta + \theta)(L)(t - 68)/100\% \qquad (23)$$

where $\theta = \Delta t/t - 68 \times 100$, or the possible percentage error in the estimated difference between the part or master and 68° F. Δt is the estimated possible error in temperature difference.

With proper attention to the simple, well-established rules of precision thermometry, the uncertainties due to temperature measurement can be easily reduced. In the usual case, however, the effects of uncertainties of coefficient of thermal expansion values are much more difficult to overcome.

Coefficient of thermal expansion data are published in tables in many handbooks and other sources. These values cannot be used without consideration of their applicability, i.e., their uncertainty. Uncertainties in the published data arise because

(a) The material of the elements of the measurement system—part or master or both—differ from the

Copyright ASME International
Provided by IHS under license with ASME
No reproduction or networking permitted without license from IHS

Not for Resale

material for which the data are given. The differences may be in chemical composition, physical composition, or both.

(b) The published values are usually the result of averaging data from several experiments and from several experimenters. Consequently, the data reflect the effect of experimental bias.

(c) The published values are valid only for temperatures other than 68° F or for a range of temperature other than that of the computation.

The National Bureau of Standards, in calibrating steel gage blocks, assumes an uncertainty of the coefficients of expansion of ±5 percent when the heat and mechanical treatment of the steel is known. The precision of the coefficient is (1) about ±3 percent among many heats of steel of nominally the same chemical content, (2) about ±10 percent among several heat treatments of the same steel, and (3) about ±2 percent among samples cut from different locations in a large part of steel that has been fully annealed. Hot or cold rolling will cause a difference of about ±5 percent.

Other materials have their own susceptibility to uncertainty of coefficient of thermal expansion, depending on the effects of chemical contaminant or physical structure. Some materials have grain structure effects in terms of expansion coefficients that vary with direction.

The typical thermal expansion measurement is conducted with an apparatus called a dilatometer in which a specimen, usually rod shaped, is heated and its change of length measured. Another form of dilatometer measures change of volume by Archimedes' principle, resulting in a coefficient of cubical expansion. For homogeneous (nondirectionally sensitive) materials, the coefficient of cubical expansion has a value three times that of the coefficient of linear expansion.

The fact that the typical test specimen bears little resemblance to real parts, with consequent uncertainties in composition and treatment not reflected in experimental data scatter, suggests that decreased uncertainties can be obtained by direct measurement of each specific object, or full-scale dilatometry.

Figures 4 and 5 represent two possible ways one may find thermal expansion data presented in the literature. Figure 4 is a synthetic case deliberately oversimplified for the purposes of this discussion. Figure 5 is an actual case.[4] Note that Figure 4 is a plot

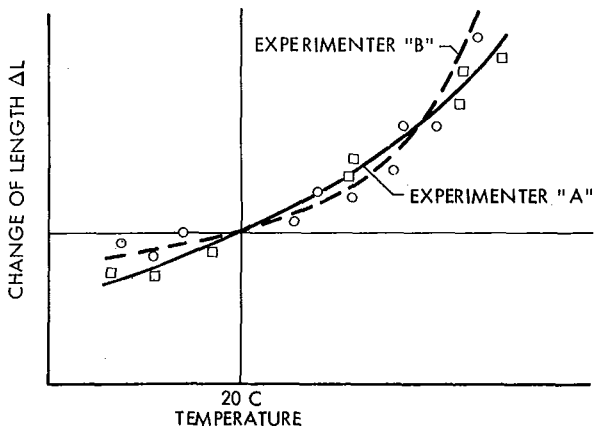

FIG. 4 Synthetic Experimental Results of Thermal Expansion Measurements

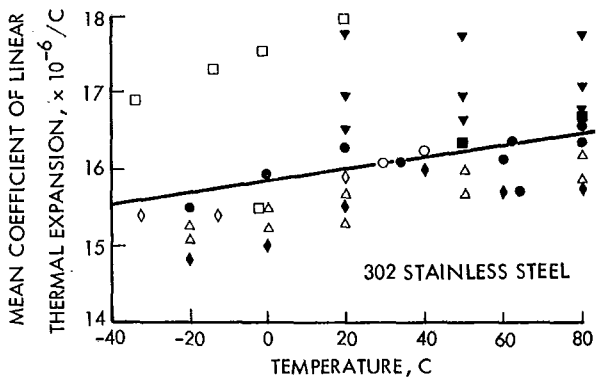

FIG. 5

of change of length, ΔL, as a function of temperature where ΔL is defined as zero when the temperature is 68° F. This is the usual form of raw data from dilatomer experiments.

Figure 5 on the other hand is a plot of the mean (or average) coefficient of expansion from 20° C,

$$\alpha_m = \frac{L_t - L_{20}}{L_{20}\,(t - 20)} \qquad (24)$$

plotted at t. The data for $t = 20°$ C are derived from the slope of the thermal expansion, $d\,\Delta L/dt$, at that special temperature.

Figure 5 gives results from several investigators. Figure 4 shows how two investigators may obtain differing results that are reflected in Figure 5. Both Figures show (1) the scatter of experimental data, and (2) the nonlinear nature of expansion relative to temperature. Data of this type are the source of all

[4] Data courtesy of Richard K. Kirby, U.S.N.B.S., Thermal Expansion Laboratory

Copyright ASME International
Provided by IHS under license with ASME
No reproduction or networking permitted without license from IHS
Not for Resale

tabulated coefficient of expansion data. The published value, however, varies according to how the experimental data are interpreted. For a single investigation, the value depends on how the trend is interpreted, i.e., how the average curve is fitted. For multiple investigations, the value depends on how the data is averaged.

For example, published values for pure or element aluminum is reported as 23.6/° C at 20° C in Metals Handbook and 22.4/° C at 20° C in Machinery's Handbook.* Also, in Metals Reference Book, Table 2, the average from 20° C to 100° C is given as 23.9/° C; and in Metals Reference Book, Table 1, the average from 0° C to 100° C is given as 23.5/° C.

20.3 Estimation of the Consequences of Temperature Variation

An estimation of the consequences of temperature variation can very seldom be obtained by direct calculation. Therefore, the procedures described in this section are based on an experimental approach to the estimation.

The basic experimental procedure used in the estimation of the consequences of temperature variation is the drift test which is described in 20.3.1. Drift test results can be interpreted in a variety of ways to obtain an estimation of Temperature Variation Error. One method is described more fully in 20.3.2 along with other methods of interpreting drift test results that are not standard, but may be useful because they are less conservative and may provide development of concrete grounds for negotiating the acceptability of thermal effects errors in special cases.

The rationale for both the drift test and the estimation of Temperature Variation Error is given in 20.3.3 in an explanation of the concept of the 3-element system.

20.3.1 Drift Test Procedure

20.3.1.1 Equipment. The object of a drift test is to record relative displacement in a 2-element system (see Section 20.3.3). The most direct method utilizes electronic indicators whose output is recorded on a strip-chart recorder. Some measurement processes, such as the measurement of flatness with an optical flat and monochromatic light or an indicating micrometer do not lend themselves to the use of automatic recording. Therefore, in some cases it will be necessary for a human operator to observe the drift and record numerical values and corresponding clock time. These data can be subsequently hand plotted.

*Calculated from 12.44 μin/in/° F at 68° F

It is strongly urged, however, that wherever possible sensitive electronic indicators and strip-chart recorders be used.

Though a drift test can be performed without any necessity for knowledge of temperature variation, it is often advisable to record one or more temperatures either for use in later correlation of two drift tests or for reference if temperature variation is to be later accepted as a method of monitoring the process for validation of the Temperature Variation Error estimate.

Just as in the case of displacement measurements, it is strongly urged that all temperatures be automatically recorded. For this purpose, recording resistance element thermometers, especially those with thermistor sensors, are recommended.

20.3.1.2 Equipment Testing

20.3.1.2.1 Displacement Transducers. Aside from the usual calibration checks, electronic indicators should be checked for possible sensitivity to the thermal environment in which the drift test is to be performed. An "electronics drift check" should be conducted by blocking the transducer and recording the output for at least the same period of time as that of the drift check to be performed. "Blocking" a transducer is to make it effectively indicate on its own frame, base, or cartridge. Figure 7 shows a cartridge-type linear variable differential transformer blocked by means of a cap or capture device which holds the indicator armature in a fixed position relative to the cartridge.

During the electronics drift check, the entire displacement recording system should be located as nearly as possible as it will be during the drift test.

Electronics drift tests have been useful in proving that, in many cases where electronic indicators have been the suspected source of drift, they were innocent and the real cause was thermal drift. The commercially available cartridge-type LVDT gage heads have been proven many times to be especially free from drift.

20.3.1.2.2 Temperature Recording Systems. The temperature-measuring and recording apparatus should be thoroughly tested for calibration, response, and drift.

Resolution of at least 0.1° F is recommended. Time constants of sensing elements of about 3 minutes are recommended for air temperature sensors, 30 seconds for liquid and surface temperature sensors. Air probes must be shielded from possible radiation effects.

20.3.1.3 Preparation of System for Test. An essential feature of the feature of the drift test is that

Copyright ASME International
Provided by IHS under license with ASME
No reproduction or networking permitted without license from IHS
Not for Resale

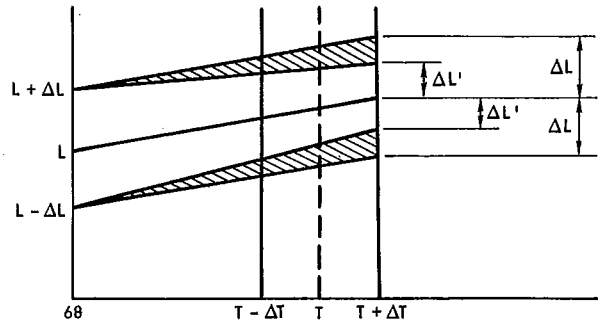

FIG. 6 Effect of uncertainties of coefficients of expansion on permissible tolerances. Part nominal size of L with tolerance ±ΔL. Tolerance is reduced to ±ΔL' when mean temperature is T ± ΔT.

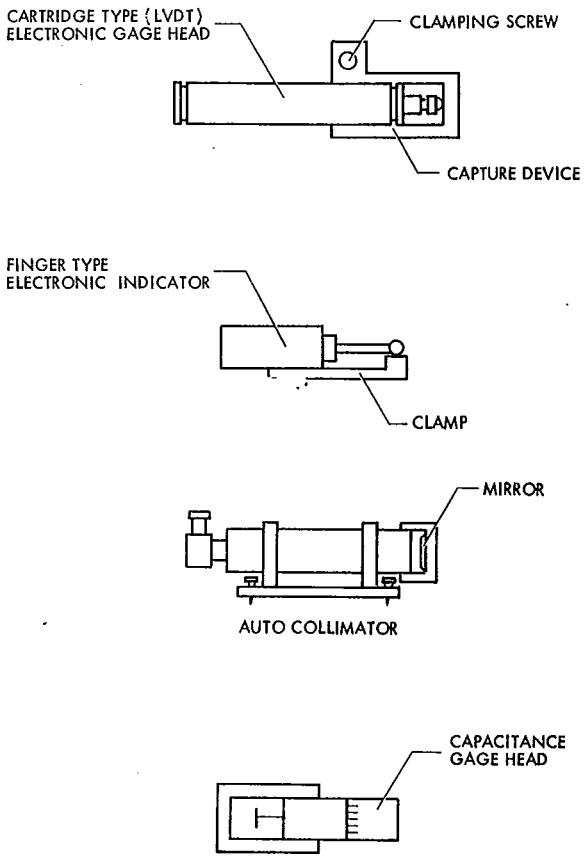

FIG. 7

conditions during the test must duplicate the normal conditions for the process as closely as possible. Therefore, before the test is started, normal conditions must be determined. The step-by-step procedure followed in the subject process must be followed in the same sequence and with the same timing in the drift test. This is especially important in terms of the actions of human operators in mastering and all preliminary setup steps. With as little deviation from normal procedure as possible, the displacement transducers should be introduced between the part (or master, depending on the type of drift check) and the rest of the C-frame such that it measures relative displacement along the line of action of the subject measurement process.

The temperature-sensing pickup must be placed so as to measure a temperature which is correlatable with the drift. Some trial and error may be necessary. In the extreme case, temperature pickups may have to be placed to measure the temperatures of all of the active elements of the measurement loop.

20.3.1.4 Representative Time Period for a Drift Test. Once set up, the drift test should be allowed to continue as long as possible, with a minimum of deviation from normal operating conditions. In situations where a set pattern of activity is observed, its duration should be over some period of time during which most events are repeated. When a 7-day work week is observed in the area, and each day is much like any other, a 24-hour duration is recommended. If a 5-day work week is observed, then either a full-week cycle should be used or checks performed during the first and last days of the week.

20.3.1.5 Postcheck Procedure. After the drift test, the displacement transducers and the temperature recording apparatus should be restandardized.

20.3.1.6 Example Drift Test Results. Figures 8 and 9 are results from drift tests conducted on a measuring machine/gage. Figure 8 is the drift recorded over a 24-hour period for a system consisting of the master and comparator. Figure 9 is the drift recorded over the succeeding 24-hour period for a system consisting of the part to be measured and the comparator. In both cases, ambient temperature at a point near the gage was recorded and is plotted in the corresponding figures.

20.3.2 Temperature Variation Error. Figure 10 shows the results of both part/comparator and master/comparator drift tests for a real measurement process. In this case, ambient temperature readings were obtained simultaneously with each drift test for the purpose of approximating the proper phase relationship.

Copyright ASME International
Provided by IHS under license with ASME
No reproduction or networking permitted without license from IHS
Not for Resale

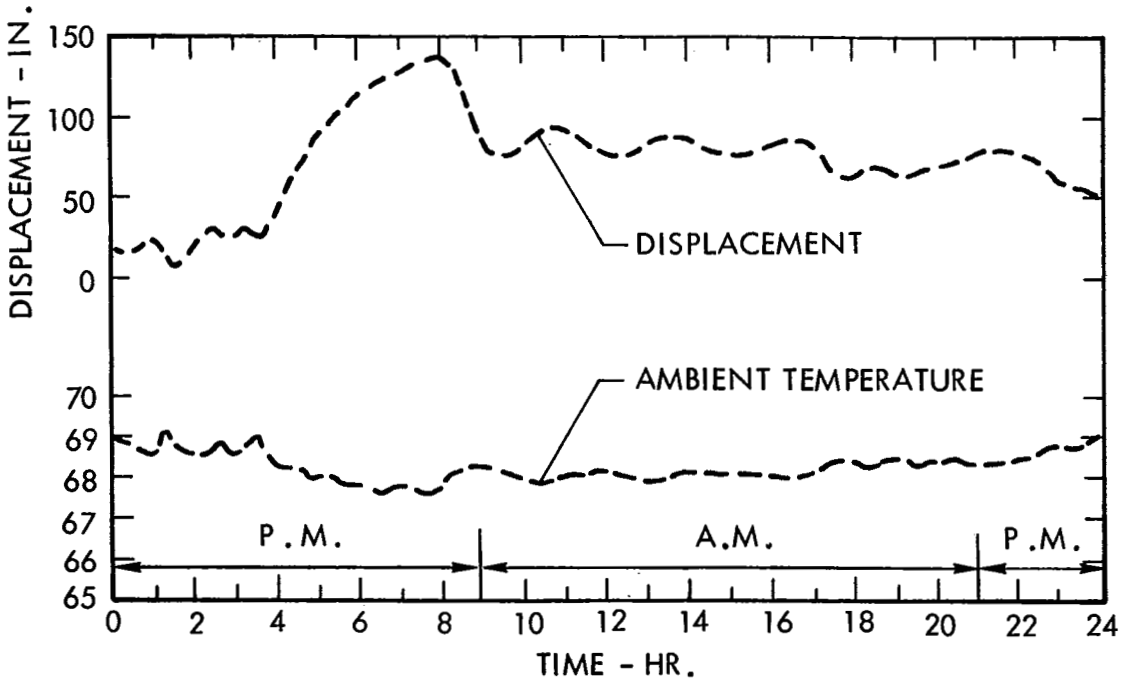

FIG. 8

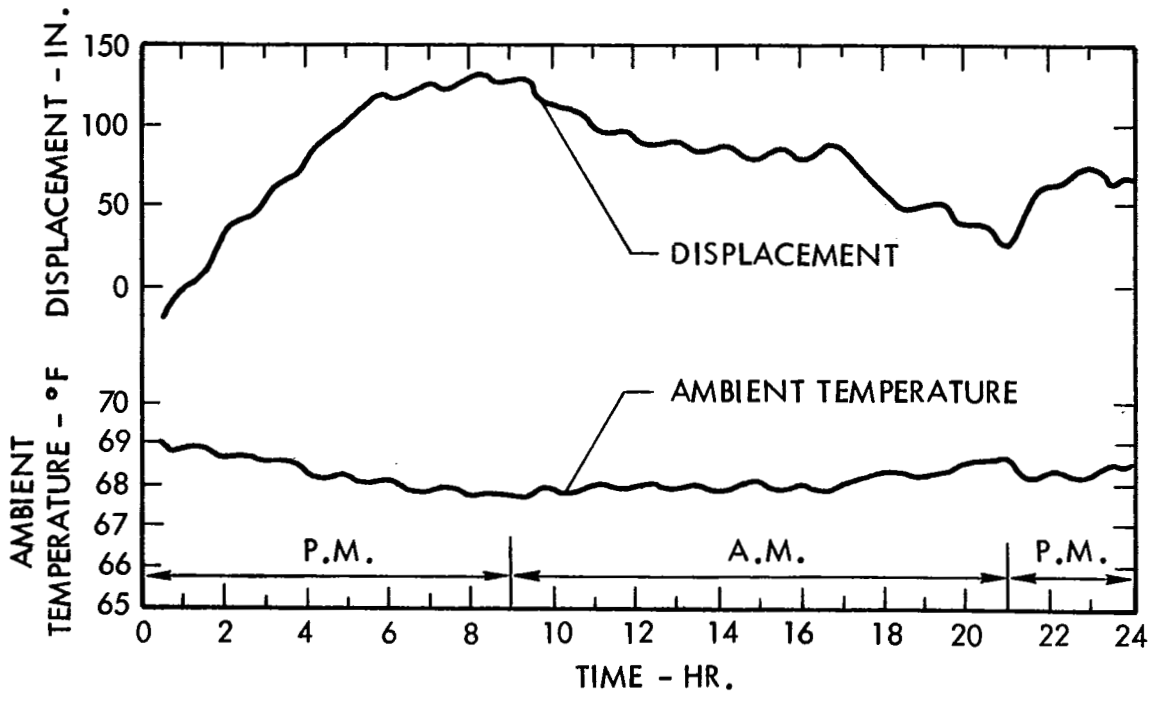

FIG. 9

Copyright ASME International
Provided by IHS under license with ASME
No reproduction or networking permitted without license from IHS
Not for Resale

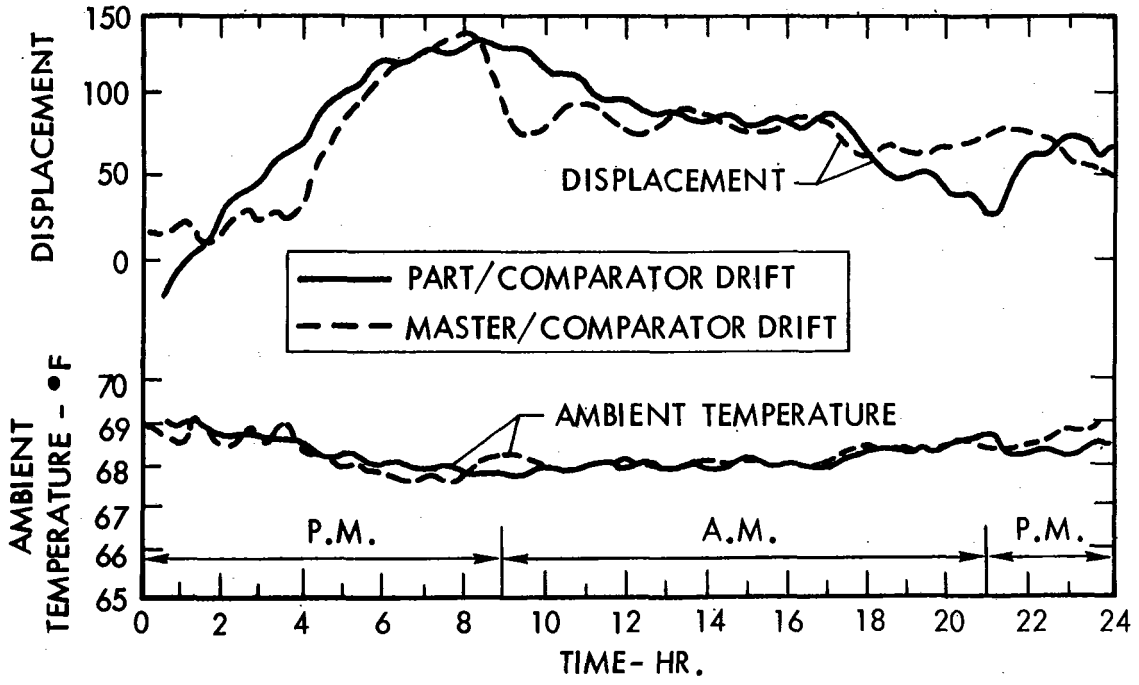

FIG. 10 Results of part/comparator and master/comparator drift tests of a gage in an Inspection Shop. Tests were conducted on successive days. The data are superimposed on clock time.

The two sets of data were superimposed on a basis of clock time, which appears to give a good overall agreement in ambient temperature variation.

The ambient temperature variation on the two successive days has a well-defined 24-hour component with an amplitude of about 1.5 F. Superimposed on this are higher frequency components with periods of from ½ to 1½ hours. From these data it is possible to compare the 24-hour cycle characteristics because of the repeatability of the environment at this frequency; but phase relationships at the higher frequencies are not discernible because of nonrepeatability.

At the 24-hour frequency, the master/comparator and part/comparator drift curves are in phase and have very nearly the same amplitude. This is a classic example that shows the importance of measuring cycle time because the larger amplitudes of drift are associated with the low frequency, whereas the smaller amplitudes of drift are associated with the higher frequencies.

For short measurement cycle times, say 1 hour, the procedure for evaluating Temperature Variation Error given in Section 20.3.1 results in a TVE = 60μin. For measurement cycle times of 12 hours or more the TVE = 120μin.

When the quality of the drift data permits, it is sometimes possible to apply the more precise evaluation methods discussed in Section 20.3.3 which are less conservative. In the example of Figure 10, little is gained by this procedure because the maximum difference between the two drift curves, which corresponds to the possible error for short measurement cycle times is still about 60 microinches. This is probably because of nonrepeatable components of temperature variation in the two days testing. The day on which the master/comparator drift test was performed appears to have had more severe high frequency temperature components. This discrepancy appears to exaggerate the true part/master relative drift. Further drift tests to obtain results for more consistent temperature variations would be advisable in this case if Temperature Variation Error is the major thermal effect in this measurement process.

20.3.3 The 3-Element System Concept. The magnitudes of the effects of temperature variation are dependent on the structure of the measurement apparatus and not only on the size and composition of the part and master as was true in the previous sections. Also unlike the other components of thermal error, Temperature Variation Error depends on the work habits of the person making the measurements.

Copyright ASME International
Provided by IHS under license with ASME
No reproduction or networking permitted without license from IHS
Not for Resale

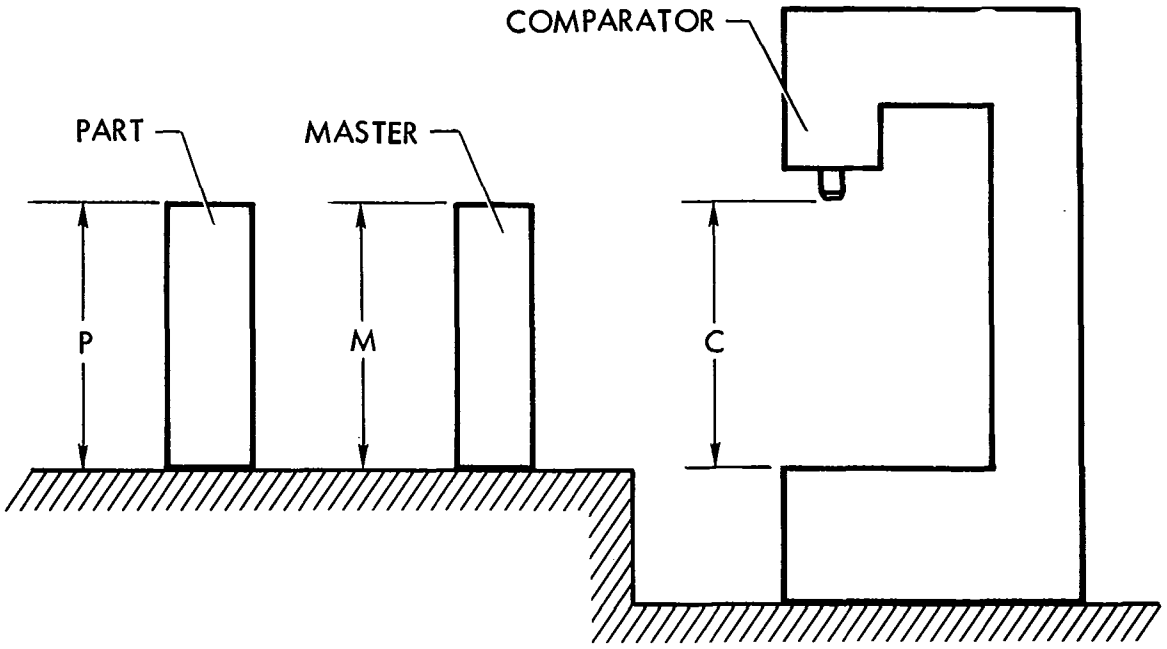

FIG. 11 The three elements of a length-measuring system.

One of the simplest structures is that encountered in the measurement of the length of an object with a gage block and a column comparator. Figure 11 shows a schematic representative of such a system. As can be seen, it consists of a part, a master (the gage block) and a comparator. Thus, the system consists of three elements.

In Figure 11, each element is shown to have a characteristic length; P = part length, M = master length, and C = comparator length. In the measurement process, C is first set equal to M, then P is checked to see if $P = C$.

If there were no temperature variations, the measurement process could be straightforward. However, because of temperature variations, heat is constantly being exchanged between the three elements and the ever-changing environment.

If the time constants of all three elements are not the same, they will respond to temperature variations such that it would be possible that all three elements will never simultaneously have the same temperature. And even if the time constants were all the same, and their temperatures always equal, they may not have the same length, except when all are at 68° F (20° C), because of different coefficients of expansion.

For each element, its time constant, length and coefficient of expansion defines its dimensional response to temperature variation.

Figure 12 shows the dimensional response of the three elements of Figure 11 for an assumed sinusoidal ambient temperature variation. For simplicity, the hypothetical system consists of three elements of the same material but different time constants, the largest being that of the master, the smallest being that of the part with the time constant of the comparator between those of the other elements.

As can be seen, the result is that the 3-dimensional responses differ in amplitude and phase. It should be noted that dimensional response data in this form is rarely obtainable, because it requires the use of an independent apparatus that must itself be unaffected by temperature variation.

The data of Figure 12, if it were obtainable, can easily be interpreted for an estimate of the Temperature Variation Error. It is only necessary to consider the effect of the measurement cycle as follows.

Suppose that at time T_{m1} the comparator is mastered. The act of making C and M equal causes the dimensional response curve of the comparator to be shifted parallel to itself (the comparator is "zero shifted") as shown by the dashed curve. If the part is checked without delay after mastering, it is found to be too large by the amount q. If, instead, the part is checked much later, say at time T_{m2}, the part will be

Copyright ASME International
Provided by IHS under license with ASME
No reproduction or networking permitted without license from IHS
Not for Resale

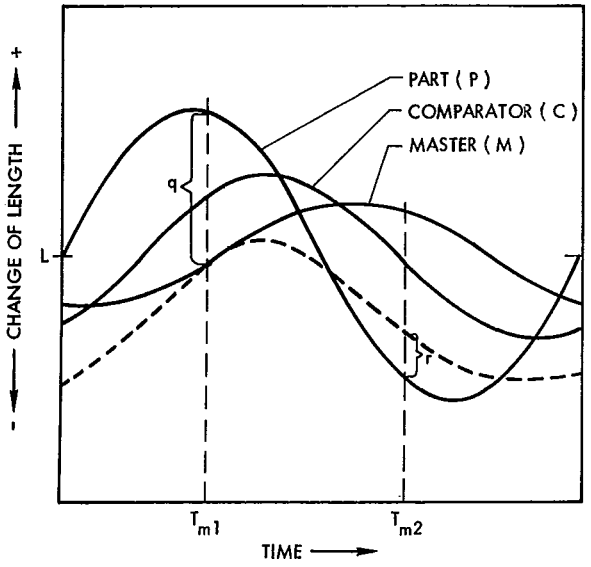

FIG. 12 Sample steady-state dimensional response of a 3-element system to a sinusoidal ambient-temperature variation

found to be too small by the amount r. If the comparator is remastered at time T_{m2}, the comparator curve is again shifted, resulting in new magnitudes of possible error.

Because Temperature Variation Error results from the variation of the differences of the characteristic lengths, it is possible to separate the 3-element system into two 2-element subsystems. For example, Figure 13 shows the two curves that result when the comparator variations (c) are subtracted from the part and master dimensional responses (P-C and M-C). These data might have been obtained by recording the output of an electronic indicator, such as is found used on modern column comparators, when the part and master are, successively, in the comparator with the indicator contacting the part and master, respectively. Data such as this are the result of drift tests. In the next section detailed procedures will be given for the conduct of drift tests followed by a discussion of methods of interpreting drift test data to obtain an estimate of Temperature Variation Error.

The main problem in interpreting such data results from the fact that it is not possible to conduct simultaneous part comparator and master/comparator drift tests. Consequently, additional data is required to determine the proper phase relationship between the two recorded drift curves; or the possible consequences of unknown phase relationship must be considered in the estimate of Temperature Variation Error.

Because the data of Figure 13 have been constructed from the data of Figure 12, no phase uncertainty exists and the Temperature Variation Error can be extracted easily. For example, for a mastering cycle occurring between times T_{m1} and T_{m2} and a measurement of the part without delay, the possible error q is simply the difference between the two curves.

The effect of mastering is to establish a new baseline for the part/comparator drift curve (P-C). This new baseline is shown in Figure 13 as the line (O-O). If the measurement of the part takes place at time T_{m2}, the resultant error is r as determined previously.

If a series of like parts are inspected between times T_{m1} and T_{m2}, the consequences of Temperature Variation Error range from $+q$ to $-r$.

In the case that the clock times at which mastering occurs are unknown and unpredictable and the measurement cycle time is very short (mastering with each measurement and negligible delay before the part is inspected), the possible Temperature Variation Error is $\pm x$, or the maximum difference between the two drift curves at any given time. Because of the short

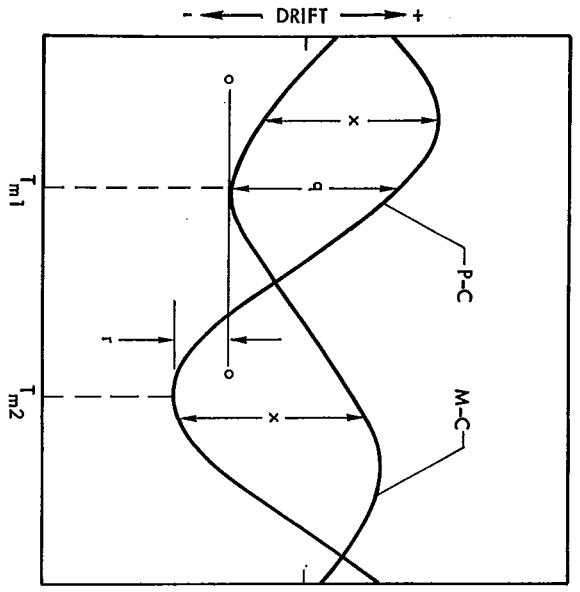

FIG. 13 Relative drift components for a 3-element system (same example as in Figure 11). P-C is the relative drift between the part and the comparator, and M-C is the relative drift between the master and the comparator.

Copyright ASME International
Provided by IHS under license with ASME
No reproduction or networking permitted without license from IHS
Not for Resale

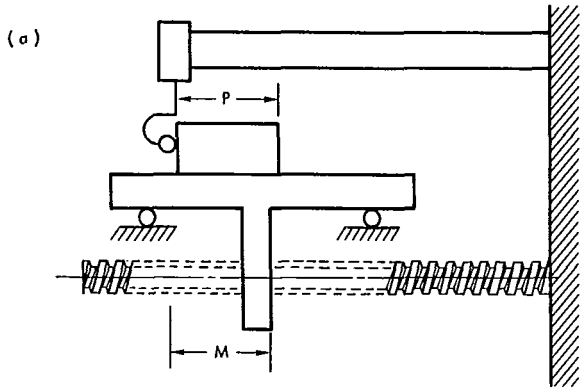

FIG. 14 Schematic of setup used to measure part on a gage with a lead-screw master.

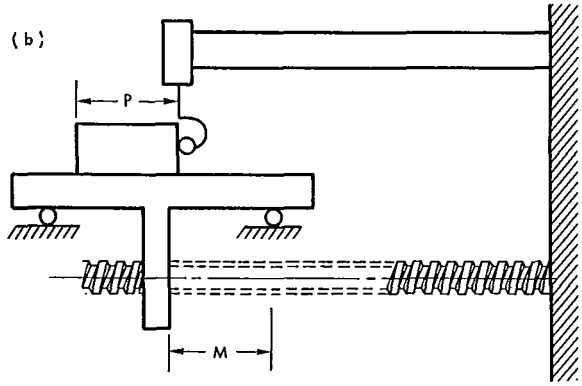

FIG. 15 Schematic of setup used to measure part on a gage with a lead-screw master. The measuring sequence is a change from (a) to (b).

measuring cycle time the comparator is slaved to the master so that the comparator contributes nothing to the error. The error, therefore, is

$$(P\text{-}C) - (M\text{-}C) = P - M.$$

This error is dependent only on the difference between the master/comparator drift and the part/comparator drift and the clock time at which the measurement is made. If the measurement cycle time is longer than the period of the temperature oscillation, the maximum possible error is $\pm y$, or the maximum difference between the two drift curves regardless of time.

Note that y is slightly larger than x.

In some dimensional measurement processes the 3-element system reduces to a 2-element system. For example, the process of measuring flatness with an optical flat under monochromatic light, is a case of a 2-element system. The comparator here is the human eye which is assumed to have no effective dimensional response to ambient temperature variation.

In length-measuring processes, however, a 3-element system is always found. For example, consider the cases shown in Figures 14 and 15. The former is the case of a measuring machine or machine tool with a leadscrew serving as master. In Figure 15, the measurement process is shown to consist of changing from position (a) to position (b). The analogy between this case and the simple 3-element system of Figure 11 is seen if it is realized that in the two configurations, the comparator is composed of a portion of the leadscrew, the nut and table support for the part. These elements, though appearing to change, remain in a structural loop, while the part and master exchange places as members of the loop.

The case shown in Figure 16 is that of a 1-inch indicating micrometer used as a comparator. The master is a gage block. Figure 17 shows the same micrometer used to measure the part without checking zero. In this case, the micrometer frame plus screw, opened to the size of the part, constitutes the master. The same structure also fulfills the function of comparator.

In Figure 18 still the same micrometer is brought to its null position and a zero correction is made before the part is measured. In this case the master is that portion of the screw that is withdrawn to make room for the part. The rest of the micrometer forms the comparator.

Consider now a 2-inch indicating micrometer and the following case. The part is 1½ inches in diameter.

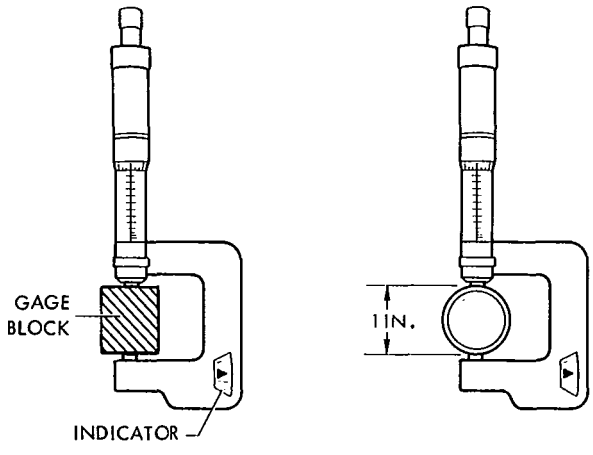

FIG. 16

Copyright ASME International
Provided by IHS under license with ASME
No reproduction or networking permitted without license from IHS
Not for Resale

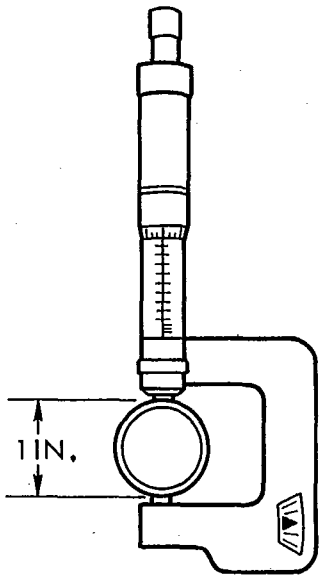

FIG. 17

A 1-inch gage block is used to master the micrometer. The master in this case is the gage block plus that portion of the screw, approximately ½-inch long, which is withdrawn to make room for the part (see Figure 19).

The last four cases show how the master and comparator can be changed by changes in the operating procedure.

20.4 Consequences of Temperature Gradients

Effects of gradients in mean environmental temperature are usually accounted for in the case of length measurements under effects of temperatures other than 68° F or under considerations of uncertainties of temperature measurements. Consequently, the main concern here is the effect on measurements other than length such as a measurement of flatness. An example of the estimation of the effect of temperature gradient on a measurement of flatness is given in Section 10.1.

To satisfy the intent of the Thermal Error Index, computation of an estimate of the consequences of uncertainties of computations as discussed in Section 20.2 must be performed and added to the estimation of the consequences of temperature gradient and the consequences of temperature variation (Section 20.3).

20.5 Thermal Error Index

This standard does not recommend values for the Thermal Error Index. Such values cannot be stated without regard to other sources of error in the measurement process. For example, a Thermal Error Index of 10 percent assigns to thermal effects that fraction

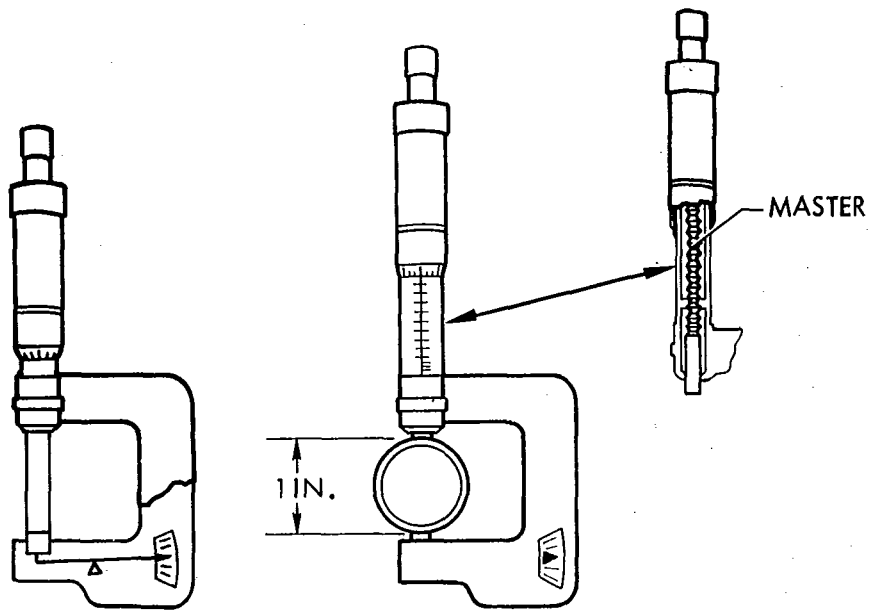

FIG. 18

Copyright ASME International
Provided by IHS under license with ASME
No reproduction or networking permitted without license from IHS

Not for Resale

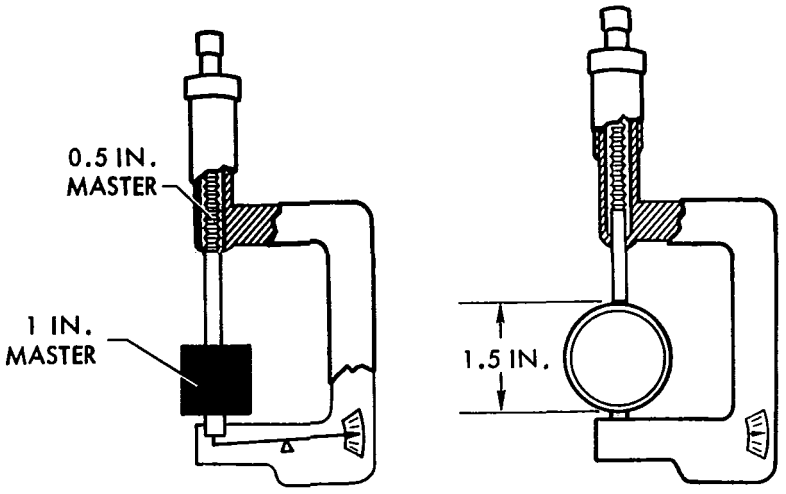

FIG. 19

of the working tolerance that is usually considered to include the composite effects of all error sources. In given cases, the permissible values depend on the degree of control that is maintained over all aspects of the measurement process, including the skill level of personnel. In a machine shop, a value of 0.1 may be justifiable while in a metrology laboratory it may be possible to increase the value to 0.2.

The main objective of the Thermal Error Index is to convey the quality of a measurement process with respect to thermal effect. As such, it is mainly an administrative tool.

It is to be noted that one way to reduce a Thermal Error Index is to increase the working tolerance. Consequently, it serves as a feedback device to inform management and designers of the degree of absurdity of a specified tolerance. The Thermal Error Index does nothing more than estimate the maximum possible error caused by thermal environment conditions affecting a particular measurement process. It does not establish the true magnitude of error in any measurement. It serves to remove doubt about the existence of errors and to establish a system of rewards and penalties to processes that are combinations of techniques and conditions, some good and some bad.

A Thermal Error Index evaluation penalizes a measurement process on three counts.

(a) Existence of temperatures other than 68° F

(b) Existence of temperature variations

(c) Existence of temperature gradients

The same evaluation rewards good techniques by decreasing the Thermal Error Index for (1) attempting a correction for the consequences of temperatures other than 68° F, (2) keeping environmental variations to a minimum, and (3) maintaining acceptable temperature gradients. The act of performing the evaluation results in the knowledge of what techniques or conditions can be changed to achieve the greatest improvement with the least effort. For example, if Temperature Variation Error is found to be the greatest source of error, the measurement cycle time may be reduced such that the Thermal Error Index is reduced to an acceptable value. Thus, by more frequent mastering, at some nominal increase in operating expense, possible misapplication of capital to improve temperature control is avoided.

Copyright ASME International
Provided by IHS under license with ASME
No reproduction or networking permitted without license from IHS
Not for Resale

AMERICAN NATIONAL STANDARDS
RELATED TO
DIMENSIONAL METROLOGY

Precision Inch Gage Blocks for Length Measurement (thru 20 Inches)	B89.1.9–1973
Measurement of Out-of-Roundness	B89.3.1–1972
Temperature and Humidity Environment for Dimensional Measurement	B89.6.2–1973
Gages and Gaging for Unified Screw Threads	B1.2–1966
American Gaging Practice for Metric Screw Threads	B1.16–1972
Preferred Limits and Fits for Cylindrical Parts	B4.1–1967
Surface Texture	B46.1–1962 (R1971)

Copyright ASME International
Provided by IHS under license with ASME
No reproduction or networking permitted without license from IHS
Not for Resale