ASME B89.3.4M 85 ■ 0759670 0047696 8 ■

M-90-10

AN AMERICAN NATIONAL STANDARD

Axes of Rotation

Methods for Specifying and Testing

ANSI/ASME B89.3.4M - 1985

SPONSORED AND PUBLISHED BY

THE AMERICAN SOCIETY OF MECHANICAL ENGINEERS

United Engineering Center 345 East 47th Street New York, N. Y. 10017

Copyright ASME International
Provided by IHS under license with ASME
No reproduction or networking permitted without license from IHS

Not for Resale

Date of Issuance: January 31, 1986

This Standard will be revised when the Society approves the issuance of a new edition. There will be no addenda or written interpretations of the requirements of this Standard issued to this Edition.

This code or standard was developed under procedures accredited as meeting the criteria for American National Standards. The Consensus Committee that approved the code or standard was balanced to assure that individuals from competent and concerned interests have had an opportunity to participate. The proposed code or standard was made available for public review and comment which provides an opportunity for additional public input from industry, academia, regulatory agencies, and the public-at-large.

ASME does not "approve," "rate," or "endorse" any item, construction, proprietary device, or activity.

ASME does not take any position with respect to the validity of any patent rights asserted in connection with any items mentioned in this document, and does not undertake to insure anyone utilizing a standard against liability for infringement of any applicable Letters Patent, nor assume any such liability. Users of a code or standard are expressly advised that determination of the validity of any such patent rights, and the risk of infringement of such rights, is entirely their own responsibility.

Participation by federal agency representative(s) or person(s) affiliated with industry is not to be interpreted as government or industry endorsement of this code or standard.

ASME accepts responsibility for only those interpretations issued in accordance with governing ASME procedures and policies which preclude the issuance of interpretations by individual volunteers.

No part of this document may be reproduced in any form,
in an electronic retrieval system or otherwise,
without the prior written permission of the publisher.

Copyright © 1986 by
THE AMERICAN SOCIETY OF MECHANICAL ENGINEERS
All Rights Reserved
Printed in U.S.A.

Copyright ASME International
Provided by IHS under license with ASME
No reproduction or networking permitted without license from IHS

Not for Resale

FOREWORD

(This Foreword is not a part of ANSI/ASME B89.3.4M-1985)

The testing of axes of rotation is at least as old as machine tools since most forms of machine tools incorporate such an axis. One of the more widely distributed European works on testing machine tools[1] devotes considerable attention to the problems encountered. Consideration of principles, equipment, and methods were included in the work.

Other European work[2] was carried forward and was published, in part, in 1959. As a result, a variety of terms came into use throughout the world to describe and explain the various phenomena found during testing and subsequent use of machine tool spindles.

In the United States, work published in 1967[3] represented a new viewpoint both in definitions and methods of testing. This work also underscored the lack of standardization of the entire subject of rotational axes.

When the American National Standards Subcommittee B89.3, Geometry, was formed in February 1963, axes of rotation were not initially considered as a separate topic. This Standard, which was initiated by J. K. Emery in August 1968 as a part of the Geometry Subcommittee work, is the result of recognizing the need for uniform technology and methods of testing for axes of rotation.

The goal in preparing the present Standard has been to produce a comprehensive document for the description, specification, and testing of axes of rotation. Because this is both a new and a comprehensive Standard, extensive advisory material has been provided in the Appendices as an aid to the user. It is recommended that this material be studied before putting the Standard to use. While the examples of the Appendices involve machine tools and measuring machines, the terminology and the underlying concepts are applicable to any situation in which the performance of a rotary axis is of concern.

This Standard was adopted as an American National Standard by the American National Standards Institute (ANSI) on May 17, 1985.

[1]Schlesinger, G., Testing Machine Tools, Machinery Publishing Co.

[2]Tlusty, J., System and Methods of Testing Machine Tools, Microtechnic, 13, 162 (1959)

[3]Bryan, J. B., Clouser, R. W., and Holland, E., Spindle Accuracy, *American Machinist*, Dec. 4, 1967

Copyright ASME International
Provided by IHS under license with ASME
No reproduction or networking permitted without license from IHS
Not for Resale

ASME STANDARDS COMMITTEE B89
Dimensional Metrology

(The following is the Roster of the Committee at the time of approval of this Standard.)

OFFICERS

E. G. Loewen, *Chairman*
M. Fadl, *Vice Chairman*
J. A. Hall, *Vice Chairman*
C. E. Lynch, *Secretary*

COMMITTEE PERSONNEL

AEROSPACE INDUSTRIES ASSOCIATION OF AMERICA, INCORPORATED
T. Mukaihata, Hughes Aircraft Co., Culver City, California

AMERICAN MEASURING TOOL MANUFACTURERS ASSOCIATION
R. P. Knittle, Glastonbury Gage/REB Industries, Inc., Glastonbury, Connecticut
C. W. Jatho, *Alternate,* Cutting Tool Manufacturers Association, Birmingham, Michigan

NATIONAL MACHINE TOOL BUILDERS ASSOCIATION
A. M. Bratkovich, National Machine Tool Builders Association, McLean, Virginia
J. B. Deam, *Alternate,* National Machine Tool Builders Association, McLean, Virginia

SOCIETY OF MANUFACTURING ENGINEERS
W. E. Drews, Rank Precision Industries, Inc., Des Plaines, Illinios

UNITED STATES DEPARTMENT OF THE AIR FORCE
J. E. Orwig, AGMC/MLDE, Newark, Ohio

UNITED STATES DEPARTMENT OF THE ARMY
F. L. Jones, USATSG, Redstone Arsenal, Alabama

UNITED STATES DEPARTMENT OF THE NAVY
D. B. Spangenberg, Navy Primary Standards Department, Washington, D.C.

INDIVIDUAL MEMBERS
P. E. Bitters, TRW Greenfield Tap & Die Division, Greenfield, Massachusetts
J. B. Bryan, University of California, Livermore, California
A. K. Chitayat, Anorad Corp., Hauppauge, New York
A. M. Dexter, Old Lyme, Connecticut
C. G. Erickson, Sterling Die Operation, West Hartford, Connecticut
M. Fadl, Scientific Columbus, Columbus, Ohio
M. Gross, Gould, Inc., Cleveland, Ohio
J. A. Hall, Rockwell International, Anaheim, California
R. B. Hook, Brown & Sharpe Manufacturing Co., North Kingstown, Rhode Island
R. W. Lamport, The Van Keuren Co., Watertown, Massachusetts
R. G. Lenz, G M Corp., Warren, Michigan
A. A. Lindberg, Moore Special Tool Co., Inc., Bridgeport, Connecticut
E. E. Lindberg, Hewlett Packard Laboratories, Palo Alto, California
E. Loewen, Bausch & Lomb, Inc., Rochester, New York
W. B. McCallum, General Electric Co., Schenectady, New York

Copyright ASME International
Provided by IHS under license with ASME
No reproduction or networking permitted without license from IHS
Not for Resale

F. J. Meyer, Jr., Machine Tool Engineer Associates International, Forestdale, Rhode Island
A. Miller, IBM, Endicott, New York
D. Pieczulewski, A G Davis Gage & Engineering Co., Hazel Park, Michigan
B. J. Taylor, Bendix Measurement Systems Division, Dayton, Ohio
E. L. Watelet, Warwick, Rhode Island
G. B. Webber, L. S. Starrett Co., Cleveland, Ohio
J. H. Worthen, Durham (RFD Lee), New Hampshire

PERSONNEL OF SUBCOMMITTEE 3 — GEOMETRY

R. G. Lenz, *Chairman*, G M Corp., Warren, Michigan
J. B. Bryan, University of California, Livermore, California
E. E. Lindberg, Hewlett Packard Laboratories, Palo Alto, California
J. H. Soutar, Jr., Rock of Ages Corp., Barre, Vermont
J. H. Worthen, Durham (RFD Lee), New Hampshire

PERSONNEL OF WORKING GROUP B89.3.4 — AXES OF ROTATION

E. E. Lindberg, *Chairman*, Hewlett Packard Co., Palo Alto, California
H. Arneson, Professional Instruments Co., Ft. Myers Beach, Florida
J. B. Bryan, Lawrence Livermore National Laboratory, Livermore, California
R. R. Donaldson, Lawrence Livermore National Laboratory, Livermore, California
E. S. Roth, Productivity Services, Inc., Albuquerque, New Mexico
G. J. Siddall, Hewlett Packard Co., Palo Alto, California
L. G. Whitten, Jr., Union Carbide Corp., Oak Ridge, Tennessee

Copyright ASME International
Provided by IHS under license with ASME
No reproduction or networking permitted without license from IHS
Not for Resale

CONTENTS

A Detailed Contents Precedes Each Appendix

Foreword iii
Standards Committee Roster v

1 Scope 1
2 Definitions 1
3 Specification or Description of an Axis of Rotation 6

Figures
1 Reference Coordinate Axes, Axis of Rotation, and Error Motion of a Spindle 2
2 Plan View of a Spindle Showing Error Motion and Axial, Face, Radial, and Tilt Motion 3
3 Polar Plots of Error Motion and Its Components 4
4 Error Motion Polar Plot, Showing PC Center and MRS Center and Error Motion Values About These Centers 5

Tables
1 Motion Type — Preferred Center 6
2 Combination of Error Motion Terms 7

Appendices
A Discussion of General Concepts 9
B Elimination of Master Ball Roundness Error 37
C References 43

Copyright ASME International
Provided by IHS under license with ASME
No reproduction or networking permitted without license from IHS
Not for Resale

ANSI/ASME B89.3.4M-1985
AN AMERICAN NATIONAL STANDARD

AN AMERICAN NATIONAL STANDARD

AXES OF ROTATION
Methods for Specifying and Testing

1 SCOPE

This document is primarily intended for, but not limited to, the standardization of methods of specifying and testing the axes of rotation of spindles used in machine tools and measuring machines. This Standard does not include the subject of angular positioning accuracy. Appendices are attached which provide advisory information for the interpretation and use of the Standard. The Appendices are not part of this Standard.

2 DEFINITIONS

The definitions in this Standard have been arranged numerically to help the user develop an understanding of the terminology of axes of rotation.

2.1 *axis of rotation* — a line about which rotation occurs

COMMENT: In general this line translates and tilts with respect to the reference coordinate axes, as shown in Fig. 1.

2.2 *spindle* — a device which provides an axis of rotation.

COMMENT: Other-named devices such as rotary tables, trunnions, live centers, and so on are included within this definition.

2.3 *reference coordinate axes* — mutually perpendicular X, Y, and Z axes, fixed with respect to a specified object

COMMENTS:

(*1*) For simplicity, the Z axis is chosen to lie along the axis of rotation, as in Fig. 1.

(*2*) Examples of a specified object are "tool holder" and "indicator bracket."

(*3*) The specified object may be *fixed* or *rotating*.

2.4 *perfect spindle* — a spindle having no motion of its axis of rotation relative to the reference coordinate axes

2.5 *perfect workpiece* — a rigid body having a perfect surface of revolution about a center line

2.6 *error motion* — changes in position, relative to the reference coordinate axes, of the surface of a perfect workpiece with its center line coincident with the axis of rotation. Error motions are specified as to location and direction as shown in Fig. 2, sketch (a) and do not include motions due to *thermal drift*.

2.7 *sensitive and nonsensitive directions* — the sensitive direction is perpendicular to the ideal generated workpiece surface through the instantaneous point of machining or gaging (refer to Fig. 2). A nonsensitive direction is any direction perpendicular to the sensitive direction. Two types of sensitive direction are recognized:

(*a*) *fixed sensitive direction*, in which the workpiece is rotated by the spindle and the point of machining or gaging is fixed; and

(*b*) *rotating sensitive direction*, in which the workpiece is fixed and the point of machining or gaging rotates with the spindle.

COMMENTS:

(*1*) A lathe has a fixed sensitive direction; a jig borer has a rotating sensitive direction.

(*2*) With a fixed sensitive direction, the reference coordinates are fixed; with a rotating sensitive direction, the reference coordinates rotate with the spindle.

2.8 *error motion terms* — the following terms are used for special cases of error motion:

(*a*) *radial motion* — error motion in a direction normal to the Z reference axis and at a specified axial location [Fig. 2, sketch (d)];

COMMENT: The term "radial runout" has an accepted meaning which includes errors due to centering and workpiece out-of-roundness and hence is not equivalent to radial motion.

(*b*) *axial motion* — error motion colinear with the Z reference axis [Fig. 2, sketch (b)];

COMMENT: "Axial slip, "end-camming," and "drunkenness" are nonpreferred terms for axial motion.

(*c*) *face motion* — error motion parallel to the Z reference axis at a specified radial location [Fig. 2, sketch (c)];

COMMENT: The term "face runout" has an accepted meaning analogous to "radial runout" [see (a) above] and hence is not equivalent to face motion.

Copyright ASME International
Provided by IHS under license with ASME
No reproduction or networking permitted without license from IHS
Not for Resale

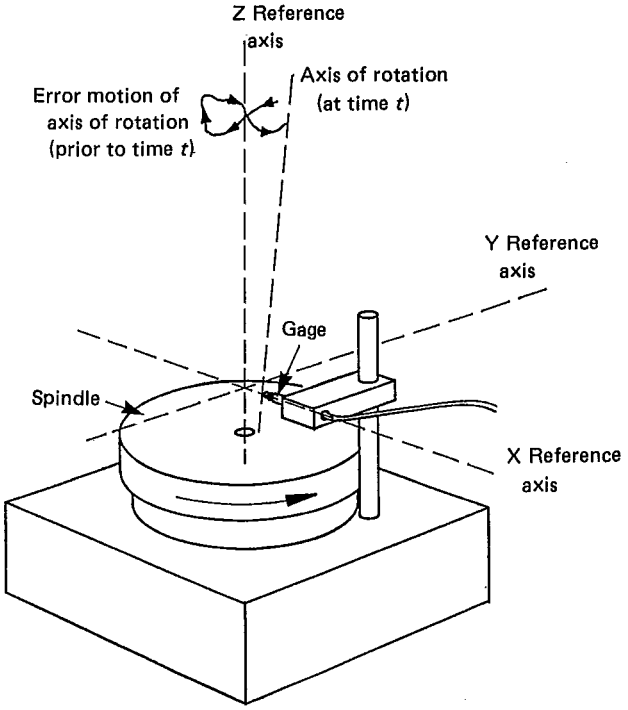

FIG. 1 REFERENCE COORDINATE AXES, AXIS OF ROTATION, AND ERROR MOTION OF A SPINDLE

(*d*) *tilt motion* — error motion in an angular direction relative to the Z reference axis [Fig. 2, sketch (e)];

COMMENTS:

(*1*) Tilt motion about the Y axis is in the sensitive direction; tilt motion about the X axis is in the nonsensitive direction. This comment is equally applicable to both fixed and rotating sensitive directions.

(*2*) "Coning," "wobble," and "swash" are nonpreferred terms for tilt motion. See Appendix A, para. A7.6.

(*3*) The term "tilt motion" rather than "angular motion" was chosen to avoid confusion with rotation about the axis or with angular positioning error of devices such as rotary tables.

2.9 *error motion measurement* — a measurement record of error motion, which shall include all pertinent information regarding the machine, instrumentation, and test conditions as detailed in para. 3.1.1

(*a*) *static error motion measurement* — a special case of error motion in which the error motion is sampled with the spindle at rest at a series of discrete rotational positions

2.10 *structural loop* — the assembly of physical components which maintain the relative position between two specified objects

COMMENT: A typical pair of specified objects is the cutting tool and the workpiece; the structural loop would include the spindle shaft, bearings and housing, the machine slideways and frame, and the tool workholding fixtures. See Appendix A, paras. A2.1 and A4.

2.11 *error motion sources* — the sources of error motion are:

(*a*) *bearing error motion*, due to imperfect bearings; and

(*b*) *structural error motion*, due to internal or external excitation and affected by elasticity, mass, and damping of the structural loop.

COMMENT: See Appendix A, paras. A3, A4, and A7.4.

2.12 *error motion polar plot* — a polar plot of error motion made in synchronization with the rotation of the spindle. The following terms apply to the error motion polar plot and its components (see Fig. 3):

(*a*) *total error motion polar plot* — the complete error motion polar plot as recorded;

(*b*) *average error motion polar plot* — the mean contour of the total error motion polar plot averaged over the number of revolutions, which can be further divided into:

(*1*) *fundamental error motion polar plot* — the best fit reference circle fitted to the average error motion polar plot;

(*2*) *residual error motion polar plot* — the deviation of the average error motion polar plot from the fundamental error motion polar plot.

COMMENTS:

(*1*) Various reference circle centers are defined in para. 2.13 and are discussed in Appendix A, para. A11.

(*2*) Strictly speaking, the fundamental error motion polar plot of an eccentric workpiece is a limacon. This has a negligible deviation from a circle if the eccentricity is small. See Appendix A, para. A7.5.

(*3*) The division of average error motion into fundamental and residual components is not applicable to radial and tilt motions because the fundamental component is nonexistent.

(*4*) The term "synchronous error motion" is a nonpreferred term for average error motion since the latter includes asynchronous error motions which do not necessarily average out to zero.

(*c*) *asynchronous error motion polar plot* — the deviations of the total error motion polar plot from the average error motion polar plot;

COMMENT: In this context the term "asychronous" means nonrepetitive from revolution to revolution of the spindle. The previously used term "random error motion" is now nonpreferred because of confusion with the statistical meaning of the word "random".

(*d*) *inner error motion polar plot* — the contour of the inner boundary of the total error motion polar plot;

(*e*) *outer error motion polar plot* — the contour of the outer boundary of the total error motion polar plot.

2.13 *error motion centers* — the following centers are defined for the assessment of error motion polar plots (refer to Fig. 4):

Copyright ASME International
Provided by IHS under license with ASME
No reproduction or networking permitted without license from IHS
Not for Resale

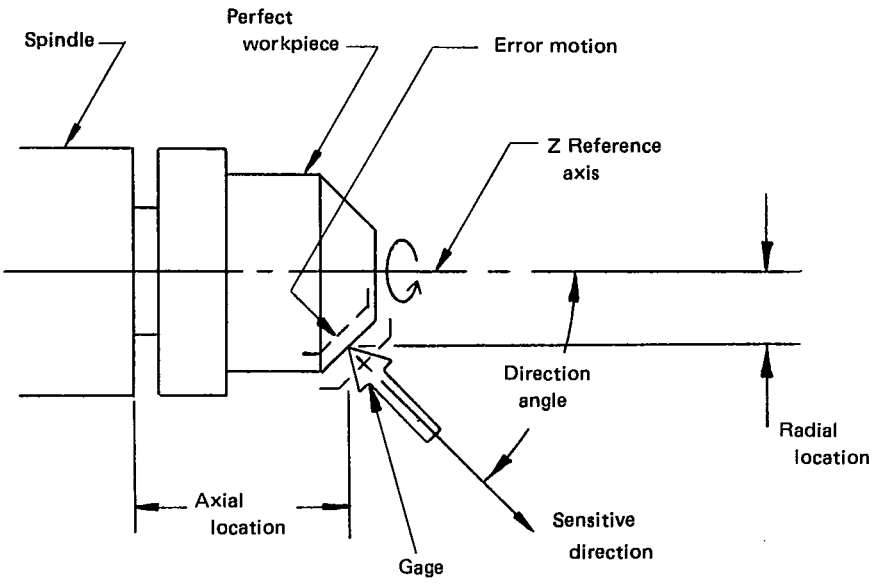

(a) General Case of Error Motion

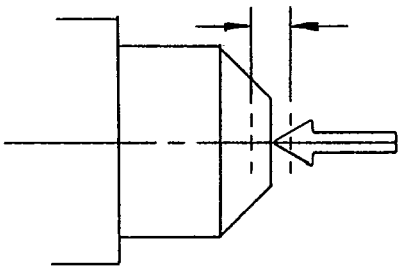

(b) Axial Motion

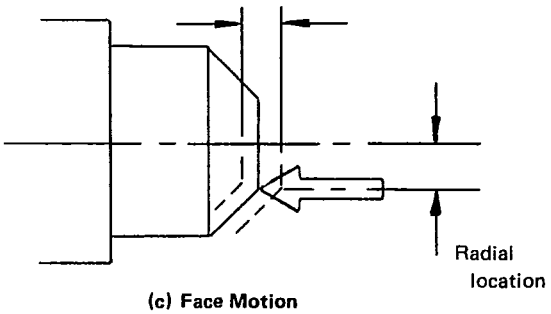

(c) Face Motion

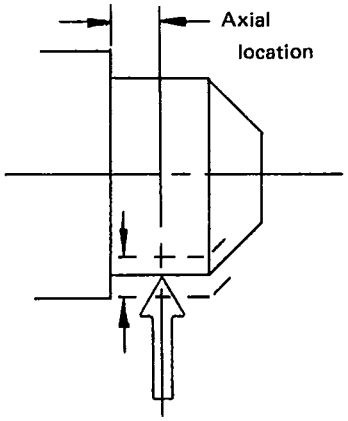

(d) Radial Motion

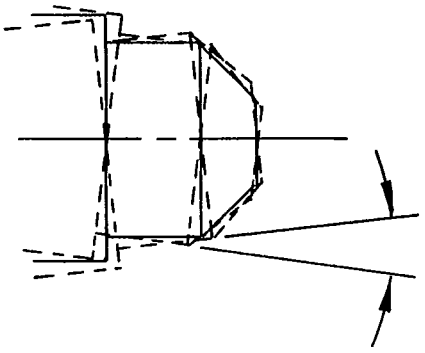

(e) Tilt Motion

FIG. 2 PLAN VIEW OF A SPINDLE SHOWING ERROR MOTION AND AXIAL, FACE, RADIAL, AND TILT MOTION

Copyright ASME International
Provided by IHS under license with ASME
No reproduction or networking permitted without license from IHS

Not for Resale

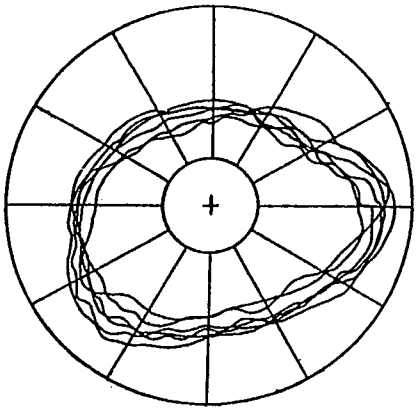

(a) Total Error Motion

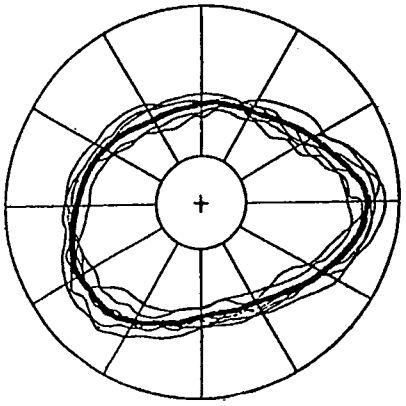

(b) Average Error Motion

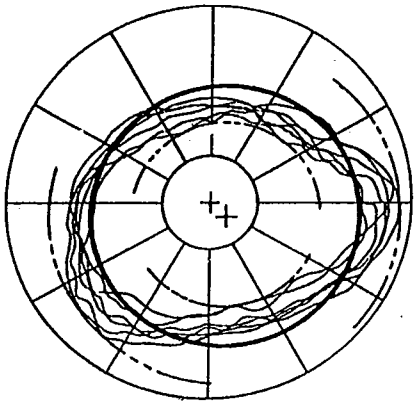

(c) Fundamental Error Motion

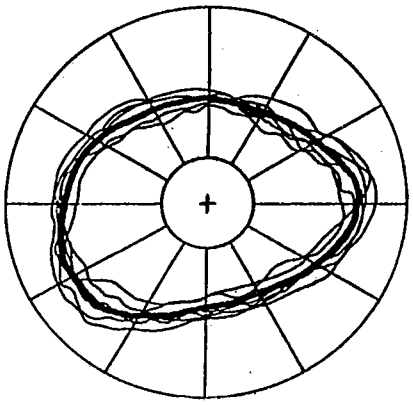

(d) Residual Error Motion

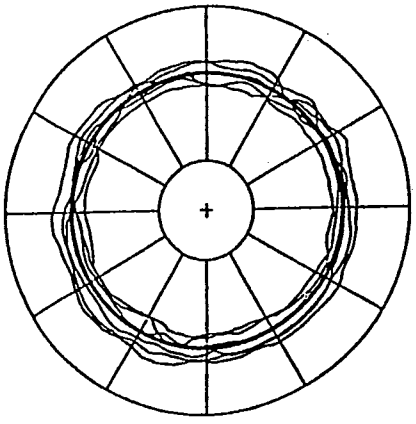

(e) Asynchronous Error Motion

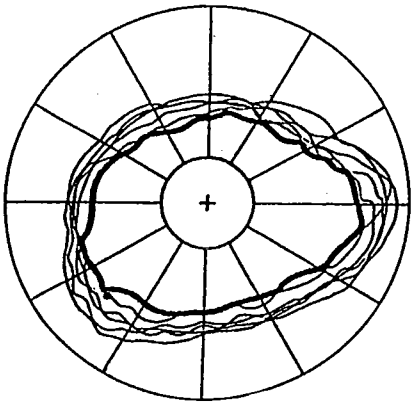

(f) Inner Error Motion

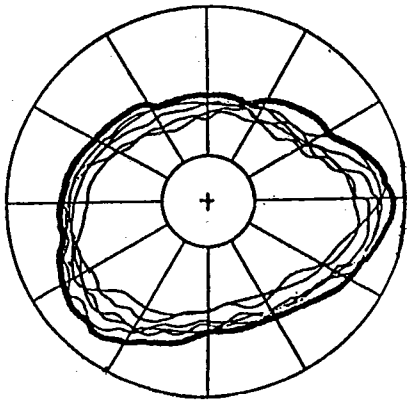

(g) Outer Error Motion

FIG. 3 POLAR PLOTS OF ERROR MOTION AND ITS COMPONENTS

Copyright ASME International
Provided by IHS under license with ASME
No reproduction or networking permitted without license from IHS

Not for Resale

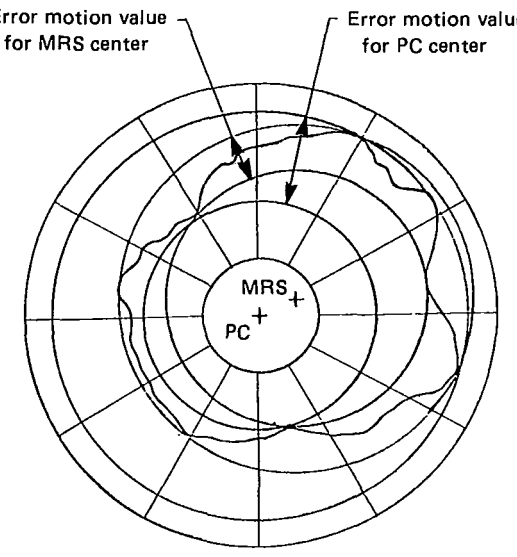

FIG. 4 ERROR MOTION POLAR PLOT, SHOWING PC CENTER AND MRS CENTER AND ERROR MOTION VALUES ABOUT THESE CENTERS

(*a*) *polar chart (PC) center* — the center of the polar chart;

(*b*) *polar profile center* — a center derived from the polar profile by one of the following methods:

(*1*) *minimum radial separation (MRS) center* — the center which minimizes the radial difference required to contain the error motion polar plot between two concentric circles;

(*2*) *least squares circle (LSC) center* — the center of a circle which minimizes the sum of the squares of a sufficient number of equally spaced radial deviations measured from it to the error motion polar plot;

(*3*) *maximum inscribed circle (MIC) center* — the center of the largest circle that can be inscribed within the error motion polar plot;

(*4*) *minimum circumscribed circle (MCC) center* — the center of the smallest circle that will just contain the error motion polar plot.

COMMENTS:

(*1*) Unless otherwise specified, the polar profile center is assumed to be derived from the average error motion polar plot.

(2) A workpiece is centered with *zero centering error* when the polar chart center coincides with the chosen polar profile center.

2.14 *error motion value* — a magnitude assessment of an error motion polar plot component. The following terms are defined (refer to Figs. 3 and 4):

(*a*) *total error motion value* — the scaled difference in radii of two concentric circles from a specified error motion center just sufficient to contain the total error motion polar plot;

(*b*) *average error motion value* — the scaled difference in radii of two concentric circles from a specified error motion center just sufficient to contain the average error motion polar plot;

(*c*) *fundamental error motion value* — twice the scaled distance between the PC center and a specified polar profile center of the average error motion polar plot;

(*d*) *residual error motion value* — the average error motion value measured from a specified polar profile center;

(*e*) *asynchronous error motion value* — the maximum scaled width of the total error motion polar plot, measured along a radial line through the PC center;

(*f*) *inner error motion value* — the scaled difference in radii of two concentric circles from a specified error motion center just sufficient to contain the inner error motion polar plot;

(*g*) *outer error motion value* — the scaled difference in radii of two concentric circles from a specified error motion center just sufficient to contain the outer error motion polar plot.

COMMENT: Fundamental error motion and residual error motion values are not applicable to radial motion or tilt motion.

2.15 *preferred centers* — Table 1 gives the preferred centers for the assessment of error motion values. If the center is not specified, the preferred center is to be assumed.

2.16 *axis average line* — a line passing through two axially separated radial motion polar plot centers

COMMENT: If the center is not specified, the MRS center is to be assumed. See Appendix A, para. A12.

2.17 *runout* — the total displacement measured by an instrument sensing against a moving surface or moved with respect to a fixed surface

COMMENT: The term "T.I.R." (total indicator reading) is equivalent to runout.

2.18 *squareness* — a plane surface is "square" to an axis of rotation if coincident polar profile centers are obtained for an axial and a face motion polar plot or for two face motion polar plots at different radii

COMMENT: The term "perpendicularity" is equivalent to squareness. See Appendix A, para. A7.6.

2.19 *pure radial motion* — the concept of radial motion in the absence of tilt motion

2.20 *compliance* — the displacement per unit static force between two objects, specified as to the structural loop, the location and direction of the applied force, and the location and direction of the displacement of inter-

Copyright ASME International
Provided by IHS under license with ASME
No reproduction or networking permitted without license from IHS
Not for Resale

TABLE 1 MOTION TYPE—PREFERRED CENTER

Motion Type	Preferred Center
Radial motion	MRS Center
Axial motion	PC Center
Residual axial motion	MRS Center
Face motion	PC Center
Residual face motion	MRS Center
Tilt motion	MRS Center

est. The following special terms can be applied when the structural loop includes a spindle:

(*a*) *radial compliance* — applicable when the force and displacement directions are at 90 deg. to the Z reference axis;

(*b*) *axial compliance* — applicable when the force and displacement directions are colinear with the Z reference axis;

(*c*) *tilt compliance* — applicable for a pure moment and a tilt displacement in a plane containing the Z reference axis;

(*d*) *face compliance* — applicable when the force and displacement directions are parallel with the Z reference axis and at a specified radial location.

COMMENT: The subject of dynamic compliance has been omitted from the first issue of this Standard. See para. 3.1.2.

2.21 *stiffness* — the reciprocal of compliance

2.22 *play* — a condition of low or zero stiffness over a limited range of displacement due to clearance between members of a structural loop

2.23 *thermal drift* — a changing distance between two objects, associated with a changing temperature distribution within the structural loop due to internal or external sources, specified as to axial and radial location and direction angle relative to the Z reference axis. Unless otherwise noted, the direction is assumed to be the sensitive direction and error motion is not included. The following special terms apply when the structural loop includes a spindle:

(*a*) *axial thermal drift* — applicable when the displacement is colinear with the Z reference axis;

(*b*) *radial thermal drift* — applicable when the displacement is perpendicular to the Z reference axis;

(*c*) *tilt thermal drift* — applicable to a tilt displacement relative to the Z reference axis.

2.24 *thermal drift plot* — a continuous time-based record of thermal drift, as specified in para. 3.1.3

2.25 *thermal drift value* — the difference between the maximum and minimum values on the thermal drift plot over a specified time period

3 SPECIFICATION OR DESCRIPTION OF AN AXIS OF ROTATION

3.1 Necessary Information

3.1.1 Error Motion. The following information is necessary for specifying or describing error motion:

(*a*) the type of motion from left column of Table 1;

(*b*) the axial and/or radial position(s) at which the measurement is made (see Table 1);

(*c*) the direction angle of the sensitive direction, e.g., axial, radial, or intermediate angles, as appropriate;

(*d*) the error motion component and type of information (polar plot or value);

(*e*) the rotational speed of the spindle;

(*f*) the time duration in seconds or number of spindle revolutions;

(*g*) the frequency response of the instrumentation, given as hertz or cycles per revolution. In the case of digital instrumentation, the displacement resolution and sampling rate.

(*h*) the structural loop, including the specified objects with respect to which the spindle axes and the reference coordinate axis are located and the components connecting these objects;

(*i*) the magnitude, direction, and location of any external force(s);

(*j*) other operating conditions which may influence the error motion measurement, such as transducer hysteresis.

3.1.2 Compliance. The following information is necessary for specifying or describing compliance:

(*a*) the axial and radial location and direction angle of the applied static force relative to the Z reference axis;

(*b*) the same information, but for the displacement measurement;

(*c*) the structural loop connecting the two ends of the load measuring instrument;

(*d*) the structural loop connecting the displacement transducer and the surface against which it reads.

3.1.3 Thermal Drift. The following information is necessary for specifying or describing thermal drift:

Copyright ASME International
Provided by IHS under license with ASME
No reproduction or networking permitted without license from IHS

Not for Resale

TABLE 2 COMBINATION OF ERROR MOTION TERMS

Motion-Component	Motion Source [Note (1)]	Motion Type	Type of Measurement
Total [Note (2)]	Structural	Error motion	Polar plot
Average	Bearing	Radial motion	Value [Note (2)]
Asynchronous		Axial motion	
Fundamental [Note (3)]		Face motion	
Residual [Note (3)]		Tilt motion	

NOTES:
(1) If no term from this column is given, the combination of all sources is to be assumed.
(2) If no term from this column is given, the designated term is to be assumed.
(3) Not applicable to radial motion or tilt motion.

(*a*) the axial and radial location and direction angle of the displacement measurement relative to the Z reference axis;

(*b*) the structural loop connecting the displacement transducer and the surface against which it reads;

(*c*) the rotational speed of the spindle;

(*d*) the time duration of the measurement;

(*e*) the frequency response of the instrumentation;

(*f*) the ambient temperature conditions of the test environment;

(*g*) other operating conditions which may influence the thermal drift;

(*h*) the drift characteristics of the displacement measuring system, due to temperature change with zero displacement input.

3.2 Combination of Terms

Any combination of terms obtained by selecting one term from two or more columns of Table 2 can be employed in the error motion description of para. 3.1.1.

Copyright ASME International
Provided by IHS under license with ASME
No reproduction or networking permitted without license from IHS

Not for Resale

APPENDIX A
DISCUSSION OF GENERAL CONCEPTS

(This Appendix is not a part of ANSI/ASME B89.3.4M-1985 but is included for information purposes only.)

A1 Introduction 11

A2 Perfect Axis of Rotation 11
- A2.1 Relative Motion 11
- A2.2 Sensitive Direction 11
- A2.3 Fixed Workpiece 12
- A2.4 Gages Versus Tools 12

A3 Imperfect Axis of Rotation 12

A4 Structural Error Motion 13

A5 Thermal Drift 13

A6 Error Motion Geometry 15
- A6.1 Pure Radial Motion 15
- A6.2 Axial Motion 15
- A6.3 Tilt Motion 15
- A6.4 Radial Motion 15
- A6.5 Face Motion 15
- A6.6 Error Motion — General Case 15

A7 Error Motion Polar Plots 17
- A7.1 Specific Example — Radial Motion Polar Plot 17
- A7.2 Average Radial Motion and Part Roundness 20
- A7.3 Asynchronous Error Motion and Surface Roughness 20
- A7.4 Bearing and Structural Error Motions 23
- A7.5 Centering Error 23
- A7.6 Fundamental and Residual Error Motions 25

A8 Effect of Unbalance 27

A9 Test Master Errors 28

A10 Error Motion Versus Runout or T.I.R. 28

A11 Error Motion Values 28
- A11.1 Minimum Radial Separation Center 28
- A11.2 Least Squares Circle Center 28
- A11.3 Maximum Inscribed and Minimum Circumscribed Circle Centers 29
- A11.4 Polar Chart Center 29
- A11.5 Asynchronous Error Motion Value 31

A12 Axis Average Line 31

Copyright ASME International
Provided by IHS under license with ASME
No reproduction or networking permitted without license from IHS

Not for Resale

A13 Rotating Sensitive Direction Measurements 31

A14 Fixed Sensitive Direction Measurements 32

A15 Considerations on the Use of the Two-Gagehead System for a Fixed Sensitive Direction 32

A16 Digital Computer Measurement System 35

Figures

A1 Illustration of Sensitive Direction in Facing, Turning, and Chamfering 12
A2 Second-Order Error Due to Relative Motion in the Nonsensitive Direction Along a Curved Surface 12
A3 Illustration of Rotating Sensitive Direction at Two Instants in Time in Jig-Boring a Hole 13
A4 Structural Loop Example 13
A5 Schematic Diagrams of the Six Basic Degrees of Freedom of An Axis of Rotation 14
A6 Geometry of Radial and Face Motion 16
A7 General Case of Error Motion 17
A8 Schematic Test Arrangements for Radial, Axial, and Tilt Motion With a Fixed Sensitive Direction 18
A9 Hypothetical Example of Radial Motion Measurement and Plotting 19
A10 Relationship of Radial Motion of Part Roundness Using Example of Fig. A9 20
A11 Total, Average, Asynchronous, Inner, and Outer Error Motion Polar Plots 21
A12 Relationship of Surface Roughness to Asynchronous Motion 22
A13 Effect of Centering Error on Radial Motion Measurement 24
A14 Example of Polar Distortion for Centering Error Signal Amplitude of 50% of Base Circle Radius 26
A15 Polar Distortion Due to Centering Error 27
A16 Determination of Minimum Radial Separation 29
A17 Determination of Least Squares Center and Circle [para. C1(f)] 30
A18 Asynchronous Motion Assessment — Constant-Amplitude Sinusoid With Centering Error, Showing Proper Measurement Along a Radius From PC Center 31
A19 Test Method for Radial Motion With a Rotating Sensitive Direction [Tlusty, para. C1(d)] 32
A20 Test Method for Radial Motion With a Fixed Sensitive Direction [Bryan, et al., para. C1(e)] 33
A21 Vector Diagram for Rotating Sensitive Direction 34

Copyright ASME International
Provided by IHS under license with ASME
No reproduction or networking permitted without license from IHS
Not for Resale

APPENDIX A
DISCUSSION OF GENERAL CONCEPTS

(This Appendix is not part of ANSI/ASME B89.3.4M-1985 but is included for information purposes only.)

A1 INTRODUCTION

This Standard was developed in response to the need of industry to specify and measure the quality of axes of rotation found in machines used in the fabrication and inspection of manufactured products. While the terminology and concepts of this Standard might be applied in other areas, no attempt will be made to do so in this Appendix.

For purposes of clarity, this Appendix uses specific examples in presenting concepts, such as the spindle of a lathe. However, it is emphasized that the concepts under discussion can be applied at all rotational axes found in machine tool or measuring machine components, such as rotary tables, trunnion bearings, live centers, and so on.

A2 PERFECT AXIS OF ROTATION

It is helpful to begin by considering the requirements to be met by a perfect axis of rotation. While it may seem appropriate to use a simple phrase such as "capable of pure rotation of a workpiece about a line fixed in space," several important points should be noted to show that this description is inadequate.

A2.1 Relative Motion

Consider a lathe mounted aboard a ship that is rolling in the ocean. The spindle axis can clearly undergo large motions "in space" without influencing the workpiece accuracy. What is important is *relative* motion between the workpiece and the cutting tool. This involves only the *structural loop*, a term that refers to the mechanical components which maintain the relative position between the workpiece and the tool (the chuck, spindle shaft, spindle bearings, headstock frame, slides, and toolpost in the present example).

A2.2 Sensitive Direction

Assume that a flat facing cut is being made in a lathe. If imperfections of the spindle bearings cause small axial movements of the workpiece relative to the tool at the point of cutting, one-for-one errors will be cut into the workpiece, and hence the axial movement is in a *sensitive direction*. By contrast, small motions tangential to the face do not cause cutting errors since these motions are in a *nonsensitive direction*. Figure A1 shows several examples. In general, the sensitive direction is always along a line which is perpendicular to the surface of revolution being generated and through the point of machining. Any line perpendicular to the sensitive direction is a nonsensitive direction. Relative motion in the nonsensitive direction will cause some error when dealing with a curved surface such as the cylinder of Fig. A2. In practice, this error is very small and can usually be neglected in return for a substantial reduction in effort. The following formula is useful in estimating this error. Let

E_N = motion in the nonsensitive direction
E_S = error in the sensitive direction due to E
R = part radius

Then

$$E_S = \frac{(E_N)^2}{2R} \text{ (if } E_N \text{ is small compared to } R) \quad \text{(A1)}$$

For example, let $E_N = 0.001$ in. (0.025 mm) and $R = 0.5$ in. (12.7 mm).

Then

$$E_S = \frac{(0.001)^2}{2 \times 0.5} = 10^{-6} \text{ in.} = 1 \ \mu\text{in.} \ (0.025 \ \mu\text{m})$$

The 1 μin. (0.025 μm) error due to moving tangentially to the circle is 1/1000 as large as if the same 0.001 in. (0.025 mm) motion had occured in the sensitive direc-

Copyright ASME International
Provided by IHS under license with ASME
No reproduction or networking permitted without license from IHS
Not for Resale

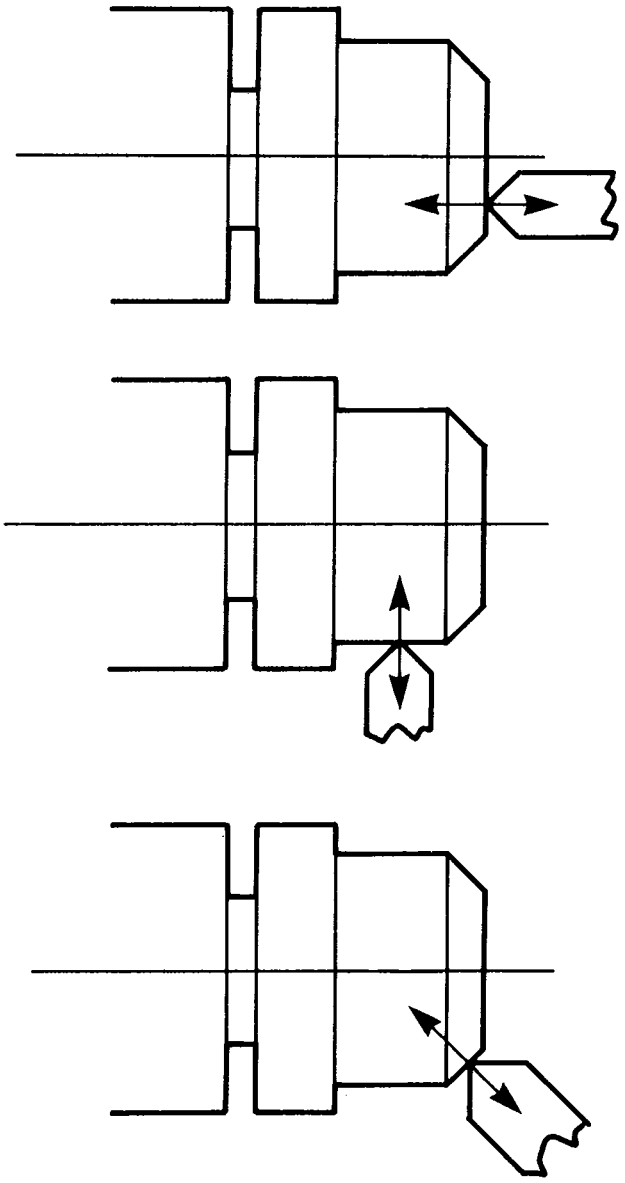

FIG. A1 ILLUSTRATION OF SENSITIVE DIRECTION IN FACING, TURNING, AND CHAMFERING

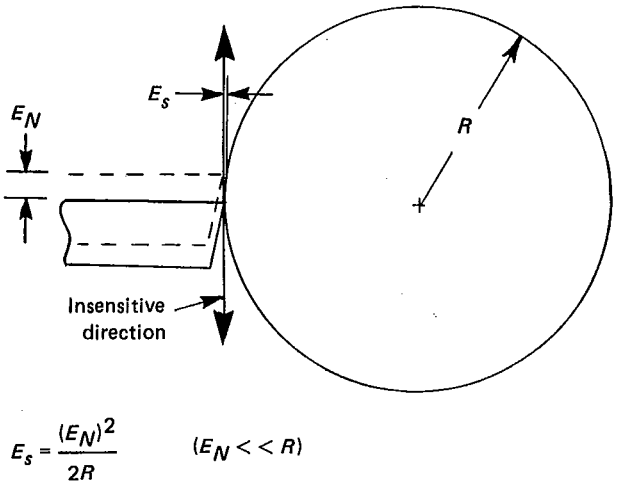

$$E_s = \frac{(E_N)^2}{2R} \qquad (E_N << R)$$

FIG. A2 SECOND-ORDER ERROR DUE TO RELATIVE MOTION IN THE NONSENSITIVE DIRECTION ALONG A CURVED SURFACE

tion, i.e., it is a "second-order" error. Ignoring motion in the nonsensitive direction is therefore justified if it is the same order of magnitude as the motion in the sensitive direction.

A2.3 Fixed Workpiece

In contrast to a machine such as a lathe, another basic type of machine exists in which the workpiece is fixed and the cutting tool rotates. An example of this type is a boring machine. Since the sensitive direction is always normal to the workpiece surface at the point of machining, the sensitive direction rotates with the tool (see Fig. A3). As will be discussed in para. A13, different test methods are used for axes of rotation depending on whether the sensitive direction is fixed or rotating with respect to the machine frame.

A2.4 Gages Versus Tools

The above examples have all referred to cutting tools. However, all of the above concepts apply with equal validity to measuring machines, with an indicator or gagehead replacing the cutting tool.

A3 IMPERFECT AXIS OF ROTATION

For a real axis of rotation, the general term *error motion* will be used to refer to relative displacements in the sensitive direction between the tool or gagehead and the workpiece. The physical causes of error motion can be classified as *bearing error motion* due to factors such as nonround bearing components, and *structural error motion* due to internal or external sources of excitation and affected by the finite mass, compliance, and damping of the structural loop. The separation of error motion test data into these two categories is not always possible, although the recording of data on synchronized polar charts is useful in this regard, as will be discussed subsequently in para. A7.4.

Copyright ASME International
Provided by IHS under license with ASME
No reproduction or networking permitted without license from IHS
Not for Resale

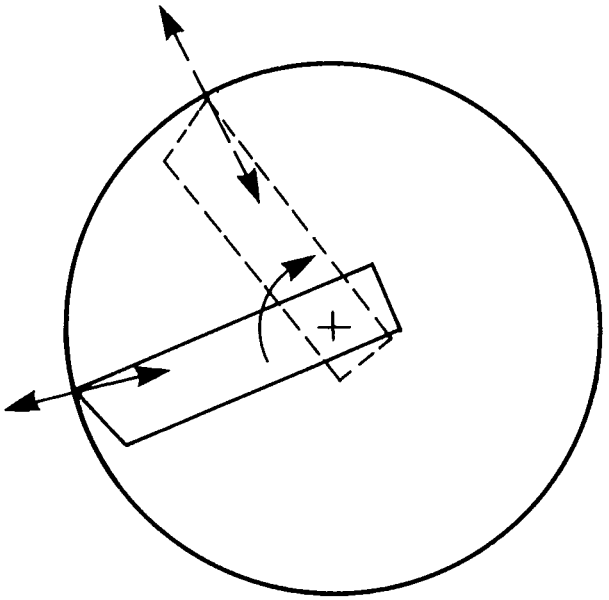

FIG. A3 ILLUSTRATION OF ROTATING SENSITIVE DIRECTION AT TWO INSTANTS IN TIME IN JIG-BORING A HOLE

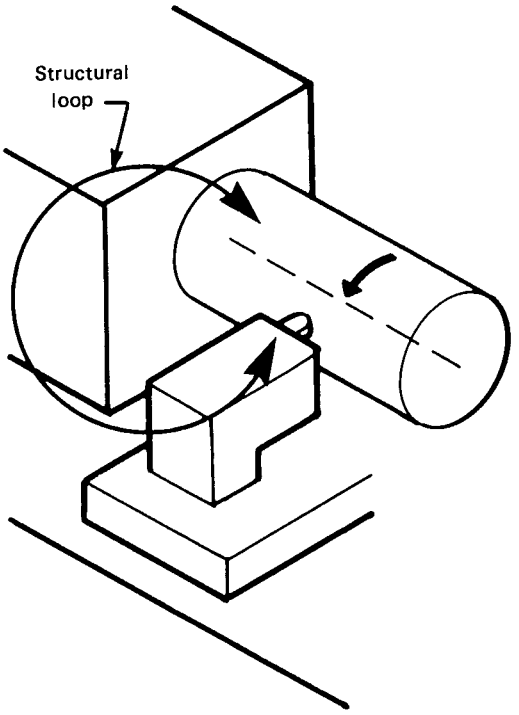

FIG. A4 STRUCTURAL LOOP EXAMPLE

A4 STRUCTURAL ERROR MOTION

The term "structural error motion" is used rather than "vibration" to emphasize the relationship to the structural loop (see Fig. A4) and to relative motion. It would be incorrect, for example, to measure the structural error motion by attaching an accelerometer to the toolpost of a lathe and integrating the output twice, since this would yield the absolute motion. For a rigid structural loop, the entire loop could undergo virtually the same absolute vibratory motion, resulting in a negligible structural error motion.

The decision to include structural error motion in an axis of rotation standard is deserving of some comment. Since only relative motion is important, the structural loop is as important to the functional use of an axis of rotation as the C-frame and anvil are to a hand micrometer. To attempt to include structural error motion due to noisy rolling element bearings and exclude that from drive gears or motors, or to include resonance in a spindle shaft but not a toolpost, seems arbitrary and unrealistic. The approach taken in this Standard has been to include structural error motion from all sources as a valid topic of discussion, but to leave to the user the choice of the structural loop best suited to his objectives. Thus the present Standard can be applied to testing a spindle as a stand-alone unit on a surface plate or as an integrated part of a complete machine. It follows that the user of this Standard should allow no ambiguity to arise regarding the structural loop associated with an error motion measurement or specification. It should also be noted that asymmetric compliance of the spindle bearing or rotating part of the structural loop can cause changes of error motion as measured under various conditions of loading; load conditions of a test should therefore be specified where appropriate.

A5 THERMAL DRIFT

An additional cause of relative motion between the tool or gage and the workpiece is a changing temperature distribution within the structural loop. The relative motion in the sensitive direction due to the accompanying thermal expansion or contraction is referred to as *thermal drift*. Thermal drift usually occurs on a slower time scale than error motion and is therefore treated separately.

The situation regarding thermal drift is similar to that of structural motion, in that it can be caused by heat generated in the spindle bearings or from heat entering the structural loop from some external source. The choice of what to include or exclude is left open to the user of this Standard.

Copyright ASME International
Provided by IHS under license with ASME
No reproduction or networking permitted without license from IHS
Not for Resale

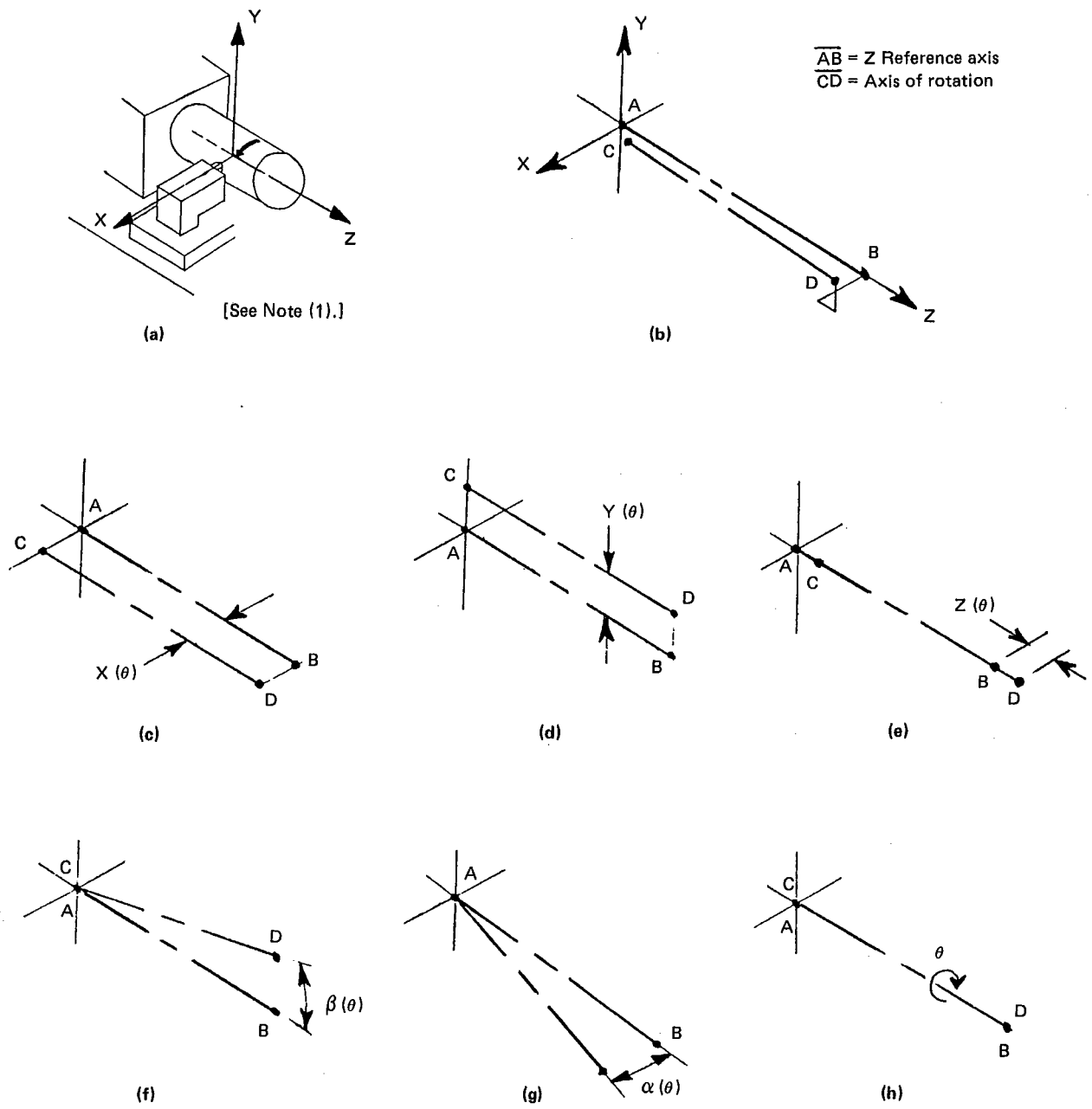

NOTE:
(1) For the lathe example shown in sketch (a), only the motions in sketches (c), (e), and (g) are in the sensitive direction.

FIG. A5 SCHEMATIC DIAGRAMS OF THE SIX BASIC DEGREES OF FREEDOM OF AN AXIS OF ROTATION

Copyright ASME International
Provided by IHS under license with ASME
No reproduction or networking permitted without license from IHS
Not for Resale

Additional advisory material on thermal drift can be found in ANSI Standard B89.6.2 [see para. C1(b)].

A6 ERROR MOTION GEOMETRY

A workpiece has six degrees of freedom, consisting of three linear motions and three angular motions, as shown individually in Fig. A5 for a given instant in time t, corresponding to a spindle position θ. Spindle rotation θ about the Z reference axis, Fig. A5, sketch (h), is the intended function of the axis of rotation. Which is the remaining five degrees of freedom contributes significantly to the error motion depends on the sensitive direction and the axial and radial location of the point of machining or gaging. For the lathe operations shown in Fig. A1, it can be concluded that the sensitive direction always lies in a plane parallel to that of the slide travel. Examination of other rotating workpiece machine tools and measuring machines shows that in virtually all cases the sensitive direction is restricted to one plane. Calling this the X-Z plane for convenience, it follows that the motions $Y(\theta)$ and $\beta(\theta)$ are always in a nonsensitive direction and can be ignored. In other words, the only motions of concern are the motions $X(\theta)$, $Z(\theta)$, and $\alpha(\theta)$ in the X-Z plane. The following terms will be used.

A6.1 Pure Radial Motion

Motion $X(\theta)$ in Fig. A5, sketch (c), in which the axis of rotation remains parallel to the Z reference axis and moves perpendicular to it in the sensitive direction.

A6.2 Axial Motion

Motion $Z(\theta)$ in Fig. A5, sketch (e), in which the axis of rotation remains coaxial with the Z reference axis and moves parallel to it.

A6.3 Tilt Motion

Motion $\alpha(\theta)$ in Fig. A5, sketch (g), in which the axis of rotation moves angularly with respect to the Z reference axis and in the plane of the axial and pure radial motions.

A6.4 Radial Motion

In general, tilt motion and pure radial motion occur at the same time, and the sum at any particular axial position is referred to as *radial motion*. A knowledge of radial motion $r_o(\theta)$ at one axial position and tilt motion $\alpha(\theta)$ allows the radial motion $r(\theta)$ at another axial position to be predicted as shown in Fig. A6, sketch (a),

$$r(\theta) = r_o(\theta) + L\alpha(\theta) \qquad \text{(A2)}$$

where L is the distance between the two axial locations. Since radial motion varies with axial position, it is necessary to specify the axial location of a radial motion measurement.

A6.5 Face Motion

Another special term is *face motion*, which denotes error motion in the axial direction at a specified distance R from the Z reference axis, as shown in Fig. A6, sketch (b). Face motion $f(\theta)$ is related to axial and tilt motion by

$$f(\theta) = Z(\theta) - R\alpha(\theta) \qquad \text{(A3)}$$

Since face motion varies with radial position, it is necessary to specify the radius of a face motion measurement.

A6.6 Error Motion — General Case

The most general case of error motion involves an arbitrary angle ϕ of the sensitive direction with respect to the Z reference axis, as shown in Fig. A7 for the spherical surface. The error motion depends on both the axial and radial locations, which must be specified together with ϕ. The equation for error motion $e(\theta)$ in terms of axial, radial, and tilt motion is

$$\begin{aligned} e(\theta) &= r(\theta) \sin \phi + f(\theta) \cos \phi \\ &= r_o(\theta) \sin \phi + Z(\theta) \cos \phi + \alpha(\theta) \\ &\quad (L \sin \phi - R \cos \phi) \end{aligned} \qquad \text{(A4)}$$

It can be seen from Eq. A2, A3, and A4 that error motion in general or for any of the special cases can be obtained from a knowledge of axial motion $Z(\theta)$, tilt motion $\alpha(\theta)$, and radial motion $r_o(\theta)$ at a known axial position, plus the location dimensions L, R, and ϕ.

Figure A8 shows schematic diagrams of two test arrangements which can be used to measure the necessary motions. It is assumed that the test pieces used in these arrangements have perfect geometry and are perfectly centered. In both cases, the radial and axial motions are measured directly. In Fig. A8, sketch (a), tilt motion is derived from face motion by use of Eq. A3,

$$\alpha(\theta) = \frac{1}{R}[f(\theta) - Z(\theta)] \qquad \text{(A5)}$$

Copyright ASME International
Provided by IHS under license with ASME
No reproduction or networking permitted without license from IHS
Not for Resale

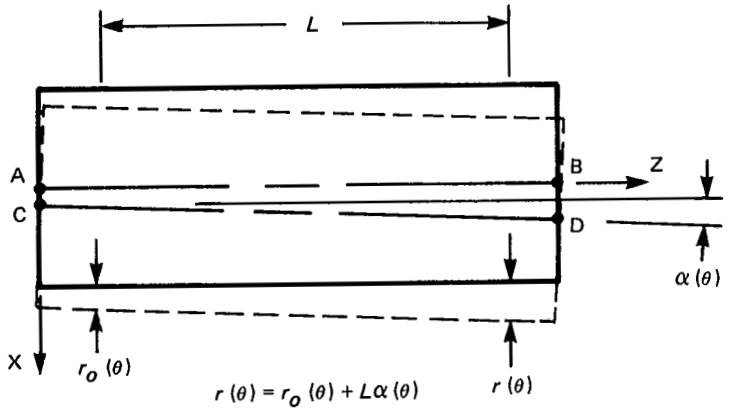

(a) Radial Motion Variation With Axial Distance

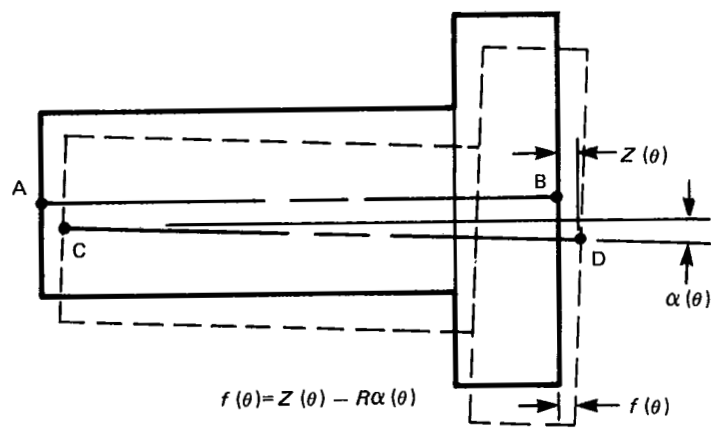

(b) Face Motion Variation With Radius

FIG. A6 GEOMETRY OF RADIAL AND FACE MOTION

Copyright ASME International
Provided by IHS under license with ASME
No reproduction or networking permitted without license from IHS
Not for Resale

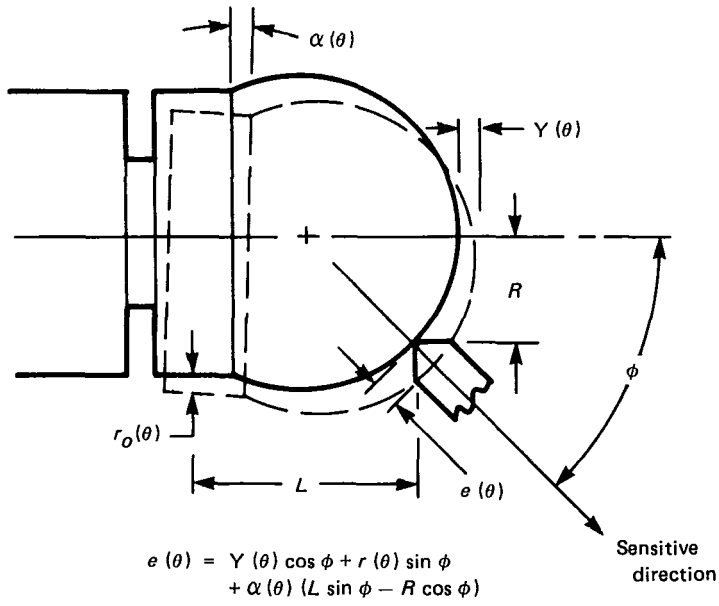

FIG. A7 GENERAL CASE OF ERROR MOTION

In Fig. A8, sketch (b), a second radial motion measurement is used to obtain tilt motion from Eq. A2,

$$\alpha(\theta) = \frac{1}{L}[r_2(\theta) - r_1(\theta)] \qquad \text{(A6)}$$

It should be noted that pure radial motion does not appear in any of the error motion equations. It is useful only as a concept in understanding error motion geometry and is not a factor which needs to be measured in determining the behavior of an axis of rotation.

It should also be noted that the illustrations in this Section have progressed from line segments in Fig. A5 to solid workpieces in Figs. A6, A7, and A8. These are equivalent in that the center line of a perfectly centered workpiece having ideal geometry is coincident with the axis of rotation, and the latter can be viewed as a workpiece of zero diameter. It is easier to visualize the concepts of face motion or error motion in the general case from solid workpieces rather than the lines of Fig. A5, and of course in practice all measurements are made from solid surfaces rather than abstract lines. The motion of an ideal solid object has been used as the basis for defining error motion in para. 2.6.

A7 ERROR MOTION POLAR PLOTS

A very useful form for displaying error motion measurements of an axis of rotation is a polar plot of the error motion versus the angular position of the axis. The following advantages for this method will be listed and discussed in turn:

(*a*) prediction of the part roundness and surface finish potential of a machine tool;

(*b*) diagnosis of bearing error motion and structural error motion;

(*c*) reduction of the required accuracy of centering the master test ball;

(*d*) assessment of the error motion value.

A7.1 Specific Example — Radial Motion Polar Plot

A specific example of an error motion polar plot will be used as a basis for discussion. Using radial motion for illustration, Fig. A9, sketch (a) shows a test arrangement involving a master test ball (assumed to be perfectly round) with a gagehead arranged to measure in the sensitive direction. Figure A9, sketch (b) shows an enlarged view of the assumed path of the axis of rotation in the X-Y plane relative to the gagehead. The assumed path consists of a repetitive figure-eight pattern which has been labelled with the angle of rotation at various points. Figure A9, sketch (c) shows a rectilinear plot of the radial motion measured by a gagehead versus angle of rotation as a result of the figure-eight pattern, with motion of the ball toward the gagehead being positive. Figure A9, sketch (d) shows the same data as Fig. A9,

Copyright ASME International
Provided by IHS under license with ASME
No reproduction or networking permitted without license from IHS
Not for Resale

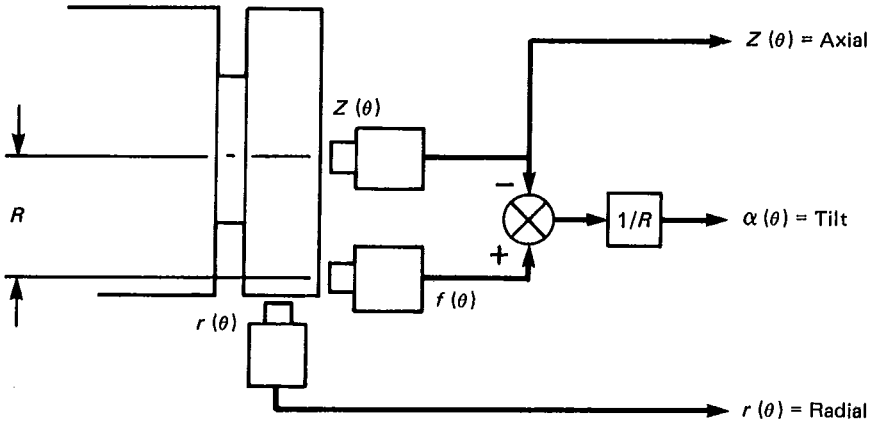

(a) Basic Motions Using Radial, Face and Axial Motion Measurements

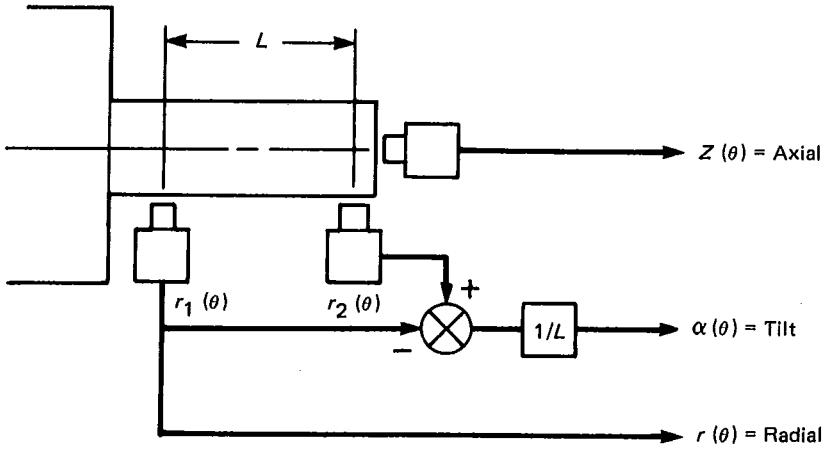

(b) Basic Motions Using Two Radial and an Axial Motion Measurement

FIG. A8 SCHEMATIC TEST ARRANGEMENTS FOR RADIAL, AXIAL, AND TILT MOTION WITH A FIXED SENSITIVE DIRECTION

Copyright ASME International
Provided by IHS under license with ASME
No reproduction or networking permitted without license from IHS
Not for Resale

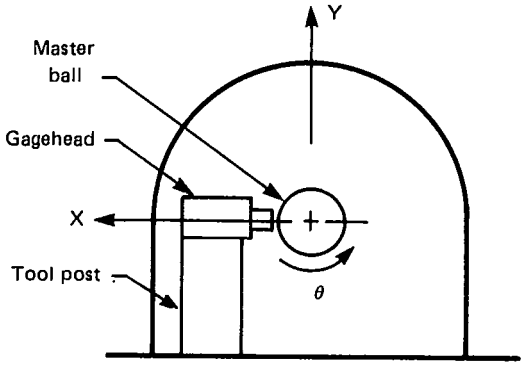

(a) Schematic Radial Motion Test—End View

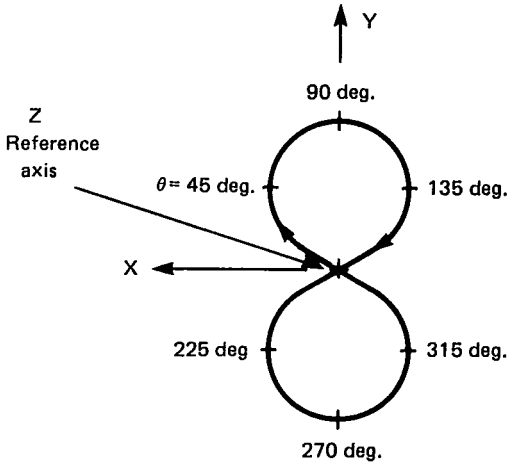

(b) Enlarged End View of Assumed Path of Axis of Rotation in the X-Y Plane

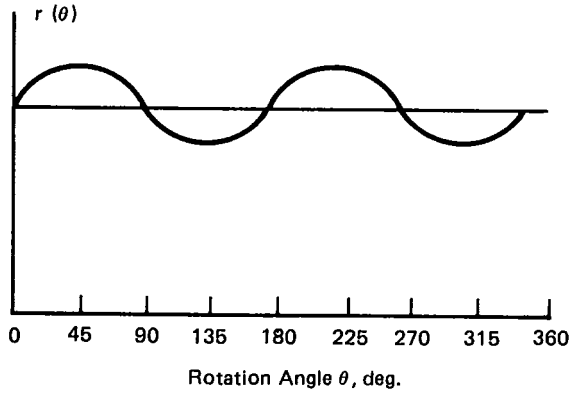

(c) Rectilinear Plot of Radial Motion [X-Component in Sketch (b) Versus Angle of Rotation]

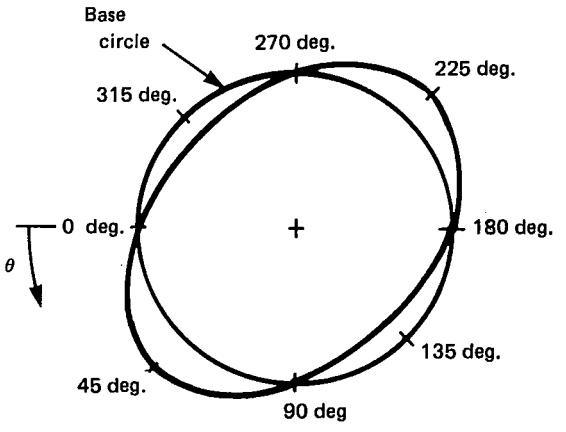

(d) Radial Motion Polar Plot [Polar Plot of Sketch (c)]

FIG. A9 HYPOTHETICAL EXAMPLE OF RADIAL MOTION MEASUREMENT AND PLOTTING

Copyright ASME International
Provided by IHS under license with ASME
No reproduction or networking permitted without license from IHS
Not for Resale

sketch (c), but in the form of a polar plot of radial motion (which might, for example, be obtained by connecting the gagehead to a polar recorder synchronized to the spindle). Thus the figure-eight pattern results in a tilted elliptical radial motion polar plot. It is not necessary to have a figure-eight pattern to produce an ellipse since other motions in the nonsensitive direction could occur without changing the radial motion.

A7.2 Average Radial Motion and Part Roundness

If the gage in Fig. A9, sketch (a) were replaced by an ideal cutting tool (capable of cutting in exact accordance with its position, without deflection, wear, etc.), it is clear that the figure-eight motion would result in a nonround part. Since the part radius is influenced only by motion of the axis in the sensitive direction, it follows that a motion defined as positive in the preceding paragraph (toward the toolpost) will lead to a smaller part radius and vice-versa. If the part is removed and placed in an error-free roundness measuring machine, the roundness chart will be identical to that of Fig. A9, sketch (d), except for a reversal of sign (peaks and valleys interchanged with respect to the base circle), as shown in Fig. A10. The out-of-roundness of the two charts is identical, and hence the radial motion polar plot of a machine tool axis of rotation predicts the best workpiece roundness the machine is capable of producing under ideal cutting conditions. Other factors such as nonideal cutting (built-up edge, tool wear, variable tool deflection), feed marks, chucking distortion, thermal distortion, residual stress relief, etc., can result in this capability not being realized.

If the above parts were left in place after cutting and the gagehead replaced on the toolpost, then under the present assumptions of ideal cutting and repetitive radial motion, the *radial runout* of the part surface would be zero. The radial motion and the part roundness errors cancel due to their equal magnitudes and opposite signs. This is one example of the difference between radial motion and radial runout measurements; see Section A10 for a more extensive discussion.

The above example is idealized in that the motion of the axis of rotation was assumed to be exactly repetitive from revolution to revolution. Figure A11, sketch (a) shows a more typical case of error motion which is nonrepetitive. Figure A11, sketch (a) is known as a *total error motion polar plot*. Figure A11, sketch (b) shows an *average error motion polar plot* which is obtained from Fig. A11, sketch (a) by averaging the radial motion at each angular position over the number of revolutions recorded. Figure A11, sketch (c) shows an *asynchronous error motion polar plot* which consists of the difference between the total and the average error motion polar plots.

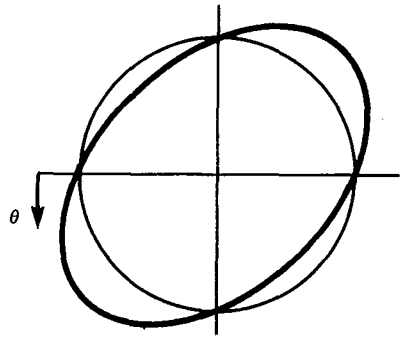

(a) Radial Motion Polar Plot

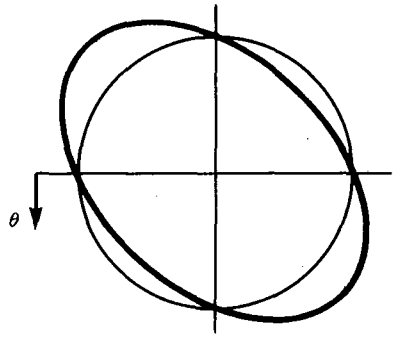

(b) Part Roundness Profile

FIG. A10 RELATIONSHIP OF RADIAL MOTION OF PART ROUNDNESS USING EXAMPLE OF FIG. A9

It can be argued that the average error motion polar plot is indicative of form error (such as roundness for radial motion). This is true to the extent that the shape of the total error motion polar plot for any single revolution is similar to the shape of the average error motion polar plot.

A7.3 Asynchronous Error Motion and Surface Roughness

It can also be shown that the asynchronous error motion polar plot can be used to predict the surface roughness obtained under ideal cutting conditions. Recalling

Copyright ASME International
Provided by IHS under license with ASME
No reproduction or networking permitted without license from IHS
Not for Resale

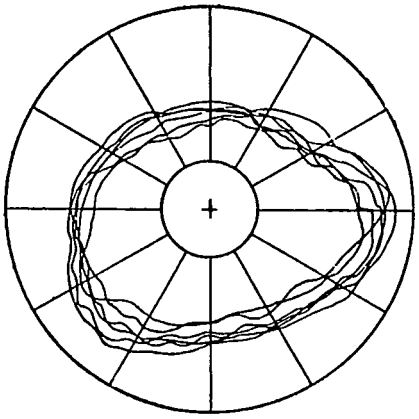

(a) Total Error Motion

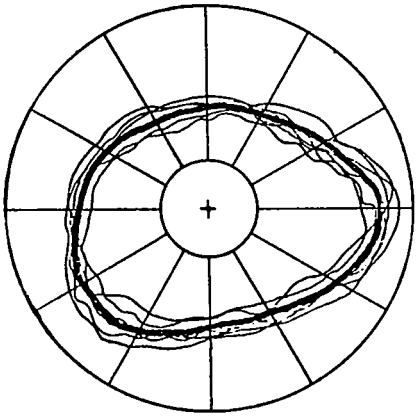

(b) Average Error Motion

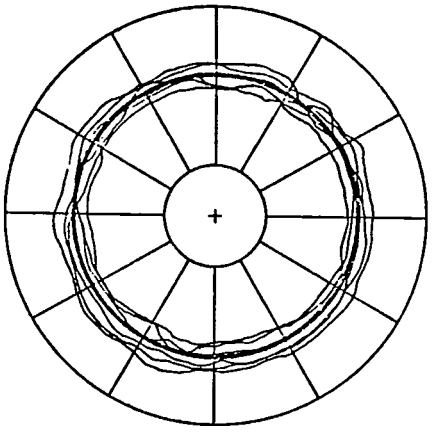

(c) Asynchronous Error Motion

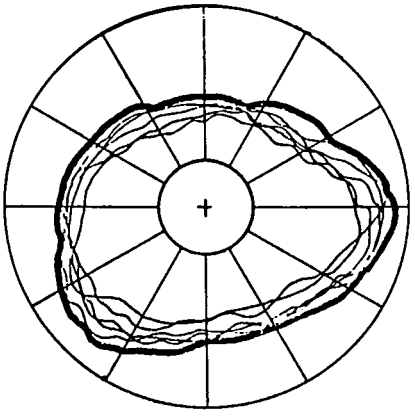

(d) Outer Error Motion

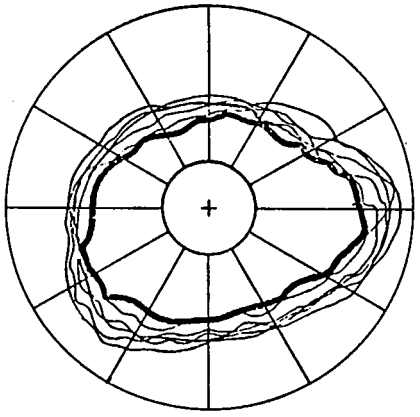

(e) Inner Error Motion

FIG. A11 TOTAL, AVERAGE, ASYNCHRONOUS, INNER, AND OUTER ERROR MOTION POLAR PLOTS

Copyright ASME International
Provided by IHS under license with ASME
No reproduction or networking permitted without license from IHS

Not for Resale

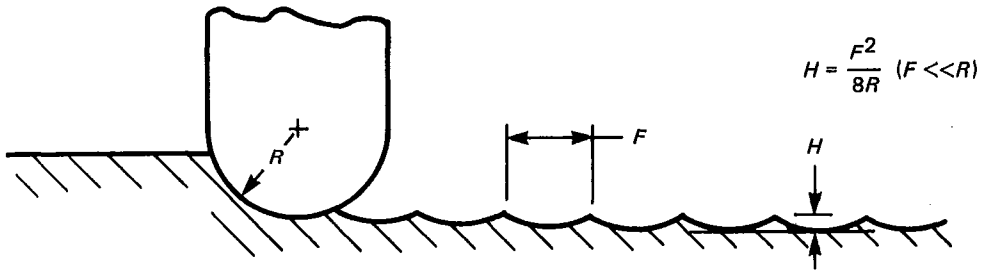

(a) Theoretical Finish for Ideal Cutting With Zero Asynchronous Motion

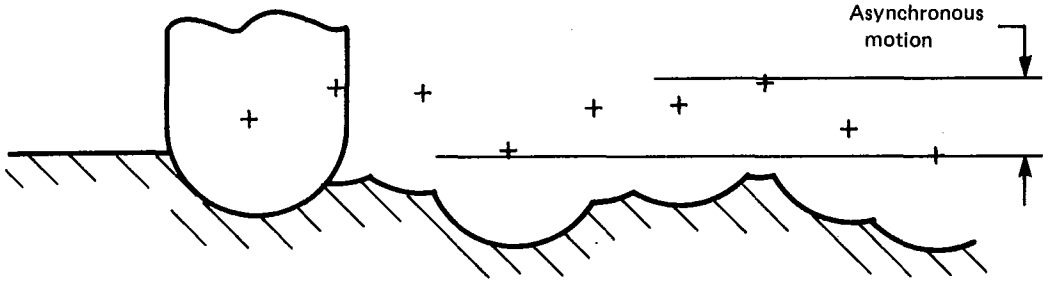

(b) Effect of Asynchronous Motion on Peak-to-Valley Roughness With Ideal Cutting

FIG. A12 RELATIONSHIP OF SURFACE ROUGHNESS TO ASYNCHRONOUS MOTION

that surface roughness is ordinarily measured across the lay (i.e., parallel to the axis for a cylinder or radially on a flat face), it follows that the measurement corresponds to crossing a number of successive revolutions at one particular angle on the total error motion polar plot. If the asynchronous error motion were zero, the only irregularity present would be the scallop-marks associated with the tool radius as shown in Fig. A12, sketch (a) which is referred to as the "theoretical finish." The peak-to-valley height H of the theoretical finish associated with a tool radius R and the feed per revolution F is

$$H = \frac{F^2}{8R} \text{ (if } F \text{ is small compared to } R) \qquad \text{(A7)}$$

The value of H can easily be made quite small, e.g., if $F = 0.001$ in. (0.025 mm)/rev and $R = \frac{1}{8}$ in. (3.1 mm), then H is 1 μin. (0.025 μm). However, if asynchronous motion is present, then the surface is cut to varying levels on successive revolutions as in Fig. A12, sketch (b). It is evident that a given asynchronous motion level is translated into an equal peak-to-valley surface roughness if the roughness cutoff width [usually 0.03 in. (0.8 mm)] is several times larger than the feed per revolution. The sum of the asynchronous motion level and H from Eq. A7 represents the potential peak-to-valley surface roughness for the machine under ideal cutting conditions, with the AA (arithmetic average) value being approximately one-fourth as large. This potential can be realized for sharp chip-free diamond tools cutting certain nonferrous metals, but under most cutting conditions, the presence of a built-up edge on the tool leads to a larger surface roughness. In some situations the tool has repeated contact with the same point on the work over a large number of revolutions, as, for example, in turning with a flat-nosed tool, cylindrical grinding with a flat-faced wheel, or dwell at zero feed rate with any tool. In such a case, it can be argued that material will be removed to the level of the maximum excursions of the work toward the tool, and hence (using the sign convention of Fig. A9) the potential part roundness can be predicted from the *outer error motion polar plot*, consisting of the contour of the total error motion polar plot as shown in Fig. A11, sketch (d). For operations inside a cylindrical bore, the *inner error motion*

Copyright ASME International
Provided by IHS under license with ASME
No reproduction or networking permitted without license from IHS
Not for Resale

polar plot has a similar significance [see Fig. A11, sketch (e)]. The reliability of such a prediction is limited by the similarity of a succession of such plots as well as by nonideal cutting conditions. For an axis of rotation of a measuring machine, the asynchronous error motion represents the basic level to which the machine can repeat its readings on a given workpiece from revolution to revolution. The average error motion represents the basic systematic error of the axis, which will still be present if there is no asynchronous error motion (perfect repeatability from revolution to revolution) or if the asynchronous error motion is averaged out over a number of revolutions.

A7.4 Bearing and Structural Error Motions

In addition to being useful in predicting the performance of a machine, the polar plot can help in diagnosing the physical causes of the observed error motion. In this context, it is helpful to view the total error motion as an asynchronous error motion superimposed on a completely repetitive average error motion profile. It can be shown mathematically that a repetitive profile can involve only those frequencies which are equal to or are whole number multiples of the axis rotational frequency. Thus the axis bearings and the axis drive system are the most likely sources of average error motion. Fluid film bearings (hydrodynamic, hydrostatic, aerostatic) in particular show highly repetitive patterns.

Asynchronous error motion has, in the past, often been referred to as "random error motion." This latter term is now nonpreferred since the physical causes of synchronous error motion are frequently not random in the statistical sense. For example, asynchronous error motion is often due to nonrandom sources such as motors or pumps operating at frequencies which are not whole number multiples of the axis rotational frequency. These frequencies are best determined by records based on one or a few revolutions to avoid overlapping traces. Rectilinear time base records are also useful for determining frequencies, but separation of the average and asynchronous error motion components can be difficult.

The above discussion suggests that average error motion can be equated with bearing error motion and similarly for asynchronous and structural error motions. This is usually an oversimplification. Asynchronous error motion can originate in a rolling element bearing due to imperfect balls, rollers, or raceways. Ball and roller bearings sometimes exhibit a pattern which is repetitive only every other revolution and this behavior is associated with the rolling elements travelling at approximately one-half of the shaft speed. Plain bearings can have a similar behavior due to a hydrodynamic effect called half-speed whirl. In these cases the deviation between successive revolutions represents asynchronous error motion which is caused by bearing error motion. Average motion can also be caused by sources other than axis bearings, such as a drive component operating at a whole number multiple of the axis rotational frequency or by a piece of equipment unrelated to the axis but having a chance synchronization with the axis rotational frequency. A useful technique for locating the sources of error motion is to note changes as potential sources are turned on and off or varied in speed. An alternative approach is to vary the axis speed of rotation. At zero axis speed, the remaining 'cloud band' thickness represents asynchronous error motion due to sources other than the axis bearings and drive system. The average error motion polar plot at zero axis speed can also be obtained from a *static error motion polar plot*, performed by placing the nonrotating axis in a succession of discrete angular positions. It should be noted that unless these angular positions are closely spaced, any high frequency components (in terms of cycles per revolution) may be filtered out of the average error motion polar plot. The possibility of high frequency components being present in the average error motion polar plot excludes the use of a low-pass electronic filter to eliminate asynchronous error motion, since a portion of the average error motion may also be removed.

The reader is again reminded that this Standard does not specify which sources of error motion are to be included in the assessment of an axis of rotation. For example, in the case of a roundness measuring machine subjected to a high level of building virbration, the machine's performance may be adversely affected by its environment. However, it is conceivable that the machine was purchased with special design features intended to deal with such an environment, in which case the error motion tests would intentionally include building vibration as a source.

A7.5 Centering Error

Returning to the radial motion example shown in Fig. A9, it is assumed that the master test ball is perfectly centered on the axis of rotation (as well as being perfectly round). An off-center test ball adds an unwanted component to the radial motion, which can be examined most simply by assuming a perfect axis of rotation. As shown in Fig. A13, the consequence of centering error is a once-per-revolution sinusoidal wave in rectilinear coordinates. In polar coordinates, Fig. A13, sketch (c),

Copyright ASME International
Provided by IHS under license with ASME
No reproduction or networking permitted without license from IHS
Not for Resale

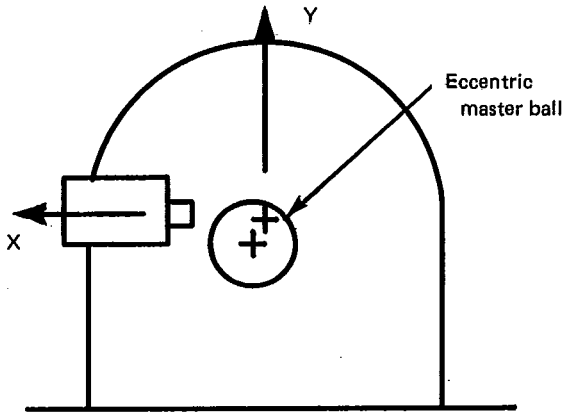

(a) Radial Motion Test
With Centering Error

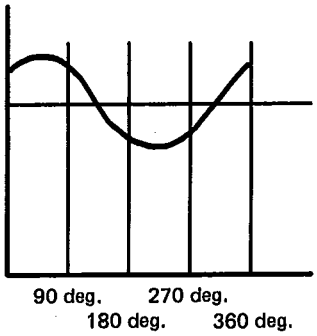

(b) Effect of Centering Error
for a Perfect Axis
Rectilinear Plot

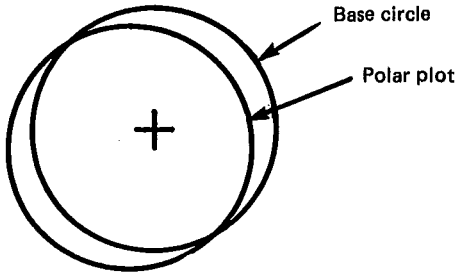

(c) Polar Plot of sketch (b)

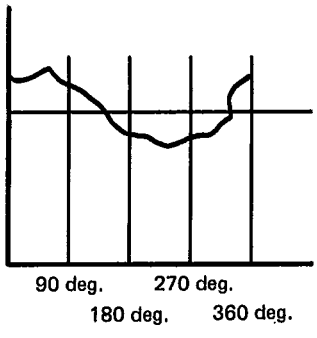

(d) Radial Motion With
Superimposed Centering
Error

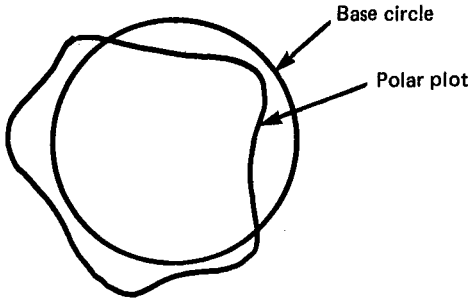

(e) Polar Plot of sketch (d)

FIG. A13 EFFECT OF CENTERING ERROR ON RADIAL MOTION MEASUREMENT

Copyright ASME International
Provided by IHS under license with ASME
No reproduction or networking permitted without license from IHS
Not for Resale

the sinusoid is very nearly a circle having its center offset from the center of the polar chart. When radial motion and centering error are both present, it is difficult to determine the sinusoidal component of the total waveform in rectilinear coordinates, as is evident in Fig. A13, sketch (d). In contrast, the sinusoid can be eliminated from the polar plot of Fig. A13, sketch (e) by choosing an offset 'best fit' center (using methods to be discussed in the following paragraph. Since it is time consuming and often virtually impossible to reduce centering error to a negligible level in the mechanical mounting of a test ball, the ability to eliminate its effect represents another advantage for polar plots.

It should be noted that the amount of centering error must be limited when using polar charts. Strictly speaking, the polar plot of a pure sinusoid is a limacon, which ranges from a circular shape to a 'heart' shape as the centering error increases, as shown in Fig A14. This causes a fictitious average radial motion to appear on the polar chart of a perfect axis of rotation due to an off-center test ball. Figure A15 [from ANSI B89.3.1; see para. C1(a)] shows the distortion which occurs for a given eccentricity of the best fit center and a given minimum radius of the polar plot. A conservative rule is to limit the offset of the best fit center on the recording chart to 0.1 in. (2.5 mm) plus 5% of the minimum polar plot radius, which limits the limacon error to 0.01 in. (0.25 mm) (approximately the limit of graphical reading accuracy).

A7.6 Fundamental and Residual Error Motions

The term used to refer to the once-per-revolution sinusoidal component of an error motion polar plot is *fundamental error motion*. Since a test ball is perfectly centered when this component vanishes, it follows that fundamental radial motion of an axis of rotation does not exist.

Similarly, fundamental tilt motion does not exist. This can be understood by visualizing a perfect cylinder mounted on an imperfect axis of rotation. If the mounting is adjusted so that the cylinder has no centering error at either end, then there can be no once-per-revolution tilt motion. Since familiar terms such as "coning," "wobble," and "swash" suggest a once-per-revolution component, their use is inappropriate to describe tilt motion.

In contrast, *fundamental axial motion* does exist, and is not caused by a master ball mounting error as with centering error. It consists of a once-per-revolution axial sliding motion of the axis of rotation along the Z reference axis and can arise, for example, from out-of-square thrust bearing components. An excellent illustration of results of this motion, shown in exaggerated detail on a model, is given in Fig. 17 of reference given in para. C1(e).

Regarding face motion, reference to Eq. A3 shows that *fundamental face motion* does exist and is equal to fundamental axial motion. This can be understood by visualizing a perfectly flat disk mounted on a perfect axis of rotation. Mounting error can result in a once-per-revolution sinusoidal face motion (increasing in direct proportion to radius), but this will vanish if the disk is perfectly square to the axis of rotation. Assuming perfect squareness and then changing from a perfect axis to an axis having fundamental axial motion, it follows that the same fundamental motion will occur at all radii. Thus a perfectly flat disk is square to an imperfect axis of rotation if the fundamental face motion is the same at all radii. It is possible to cancel the fundamental face motion by mounting the disk out-of-square to the axis of rotation, but this cancellation can only occur at one radius. The out-of-squareness angle necessary for this cancellation becomes larger as the radius becomes smaller, reaching an impossible situation at zero radius.

The existence of fundamental face motion has an interesting consequence in machining and measuring flat faces. If a flat disk is faced on an axis which is perfect except for the presence of fundamental axial motion, then the part can be viewed as made up of many flat-faced thin rings, each of which is out-of-square with the axis of rotation by an amount which increases with decreasing radius. Such a part is not flat over its full area. However, if the part is mounted in a roundness measuring machine with the transducer sensing axially, then the part can be tilted so that no flatness error is sensed during a trace around a circular path concentric with the part center. Such a part is said to have circular flatness. Since it does not have area flatness, it follows that circular flatness measurements can be misleading if they are not properly understood.

Residual error motion is the general term applied to the difference between average and fundamental error motion. The consequences of residual error motion are analogous to those of average radial motion. For example, residual face motion during machining leads to errors in circular flatness in the same way that average radial motion leads to errors in roundness.

In the general case of error motion with an arbitrary sensitive direction angle from the Z reference axis, the fundamental error motion is proportional to cos ϕ times the fundamental axial motion (see Eq. A4). Thus a 45 deg. taper involves 70.7% as much fundamental error motion as a flat face.

Copyright ASME International
Provided by IHS under license with ASME
No reproduction or networking permitted without license from IHS
Not for Resale

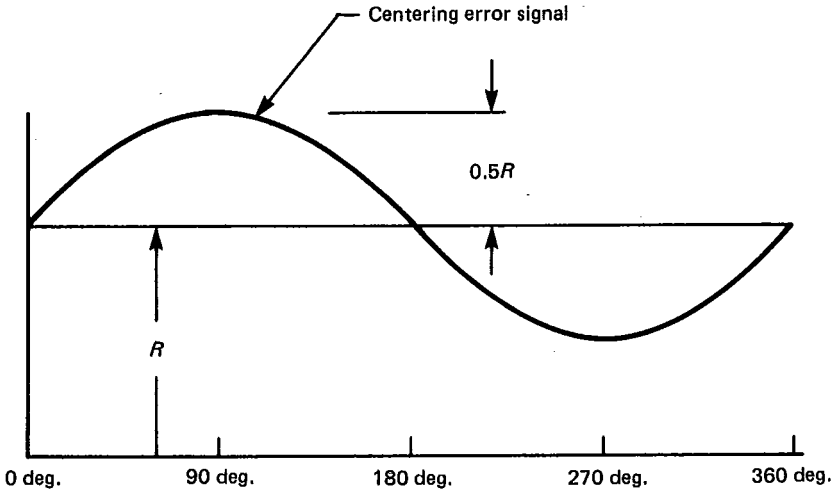

(a) Rectilinear Plot of Centering Error Signal

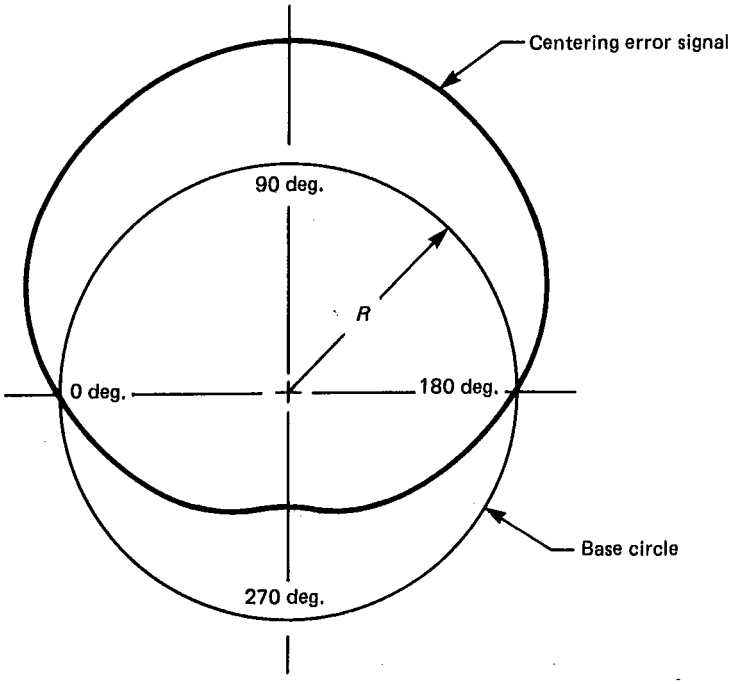

(b) Polar Plot of sketch (a), Showing Polar Distortion

FIG. A14 EXAMPLE OF POLAR DISTORTION FOR CENTERING ERROR SIGNAL AMPLITUDE OF 50% OF BASE CIRCLE RADIUS

Copyright ASME International
Provided by IHS under license with ASME
No reproduction or networking permitted without license from IHS
Not for Resale

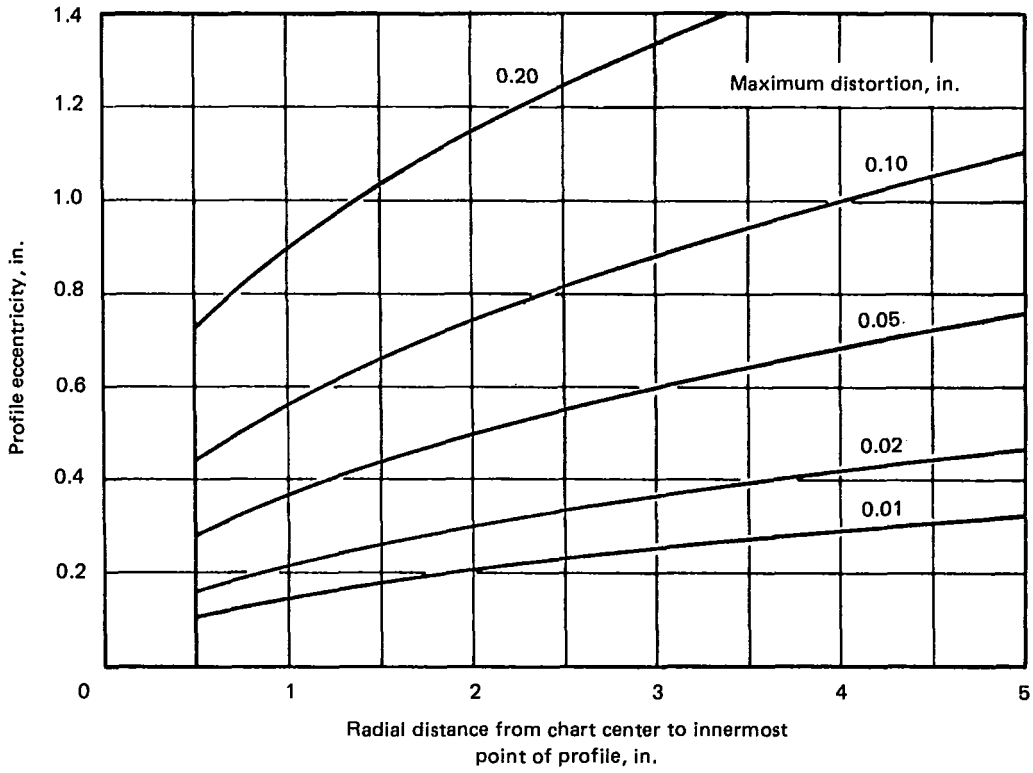

FIG. A15 POLAR DISTORTION DUE TO CENTERING ERROR

A8 EFFECT OF UNBALANCE

Unbalance of the rotating elements introduces a once-per-revolution sinusoidal force with maximum amplitude varying as the square of the spindle speed, in a rotating sensitive direction. In machining, the consequence of this for an otherwise perfect axis is that although a perfectly round part can be machined at a given speed it will exhibit a centering error at other speeds. If two cylindrical sections are machined on the same part at different speeds, their geometric center lines will not be coaxial. If the shift of the axis of rotation with respect to the rotating object involves a tilt as well as a radial component, then the center lines of the above two cylinders will not be parallel. Shifts in tilt also change the parallelism or squareness of the axis of rotation to the machine slideways, causing cylinders to be machined with a taper and flat faces to be machined conical.

In the above discussion, unbalance is assumed to cause a circular orbit of an initially centered test ball. If the structural loop has nonlinear and/or asymmetric compliance, unbalance may excite higher harmonic motions which lead to roundness and flatness errors. Balancing of rotating elements can be as important for this reason as any other.

In the case of surface finish it can be demonstrated that, in single point turning, there is no relationship between surface finish and unbalance. This is difficult for some people to believe since the necessity of a smooth, quiet, vibration-free machine for achieving mirror finishes seems obvious. It is, in fact, absolutely essential for a cylindrical grinding machine. To understand why it is not necessary for a lathe requires insight into the difference between synchronous and asynchronous vibration. Unbalance introduces synchronous motion which, in single point turning, does not affect finish since the relative position of the tool with respect to the axis of rotation at each complete revolution is the same. An otherwise perfect lathe with a large amount of unbalance will achieve theoretical finish [see Fig. A12, sketch (a)]

Asynchronous motion, on the other hand, is motion of the tool with respect to the spindle at frequencies other than whole number multiples of the spindle frequency. It affects the position of the tool with respect to the axis of rotation at each complete revolution and therefore affects surface finish [see Fig. A12, sketch (b)]. The surface finish achieved by cylindrical grinders is influenced by unbalance because the wheel spindle rotates at a different speed than the work spindle and synchronous mo-

Copyright ASME International
Provided by IHS under license with ASME
No reproduction or networking permitted without license from IHS
Not for Resale

tion of the wheel spindle automatically becomes asynchronous motion with respect to the work spindle.

A9 TEST MASTER ERRORS

Thus far it has been assumed that a geometrically perfect master test ball or equivalent was being used in the various error motion measurement examples. It is clear that the geometry errors in a master will cause erroneous error motion measurements, and it cannot always be assumed that the master has negligible errors, since high quality axes of rotation may have error motions of the order of 1 μin. (0.025 μm). Appendix B describes methods for separating the errors of the master from the average error motion component of the axis of rotation.

A10 ERROR MOTION VERSUS RUNOUT OR T.I.R.

It should be noted that error motion measurements differ from measurements of runout or T.I.R. (total indicator reading) in several respects. It is important to understand these differences, since runout tests have been used extensively in the past in assessing the accuracy of rotational axes. Runout is defined as "the total displacement measured by an instrument sensing against a moving surface or moved with respect to a fixed surface." Under this definition, a radial runout measurement includes both the roundness error and the centering error of the surface that the gagehead senses against, and hence radial runout will be identical to radial motion only if both of these errors are zero. As noted previously, neither of these conditions is easily accomplished. While centering error unavoidably makes the runout larger than the error motion, it is possible for roundness errors to make the runout either larger or smaller than the error motion. The latter situation can arise if the surface against which the displacement transducer is sensing was machined in place on the axis bearings, as discussed previously in para. A7.2. Similar comments apply to face motion versus face runout; the latter measurement includes nonsquareness and circular flatness errors (see also para. A7.5).

A11 ERROR MOTION VALUES

In most cases, an error motion value is equal to the difference in radii of two concentric circles that will just enclose the corresponding error motion polar plot, and the value obtained depends upon the location of the common center of these two circles. The following four methods are recognized in this Standard for locating *polar plot centers:*

(*a*) minimum radial separation (MRS) center;
(*b*) least squares circle (LSC) center;
(*c*) maximum inscribed circle (MIC) center;
(*d*) minimum circumscribed circle (MCC) center.

These centers are the same as those recognized by ANSI B89.3.1 [para. C1(a)] which is logical in view of the previously discussed relationship between radial motion and roundness.

In addition, a fifth center, the *polar chart* (PC) *center*, is used in establishing error motion values which include fundamental axial motion (see para. A11.4).

A11.1 Minimum Radial Separation Center

The concept of the minimum *radial separation center* is, as the name implies, that of a center chosen so as to make the difference in radii of the two concentric circles which contain the error motion polar plot an absolute minimum. By definition, the MRS center yields the smallest possible number for the error motion value. There is no direct method of locating this center and some form of iterative trial and error must be used. In unusual cases, more than one such center may exist. Figure A16 shows three successive trials using a bow compass; further reduction is still possible as the reader may wish to verify. In general, the minimum has not been found until the inner and outer circles both touch the polar profile at two points; in unusual cases more than two points per circle may occur. In the common case of two points per circle, the points must also alternate between the inner and outer circles. The time required for trial and error searching can be reduced by use of a transparent template having engraved concentric circles. Further reductions in time, together with improved accuracy, can be obtained with computer-aided systems (see Section A15) using iterative algorithms.

The MRS center has been chosen as the preferred polar plot center for error motion assessment in the present Standard and is to be understood as the method to be used if no method is specified. Any of the other three methods can be used provided that the method is specified.

A11.2 Least Squares Circle Center

The *least squares circle center* is based on the mathematical approach of choosing a center which will minimize the sum of the squares of the polar plot deviations from a circle about that center. The error motion values obtained by the LSC method can be expected to be about 10% larger than the MRS values on the average. Since

Copyright ASME International
Provided by IHS under license with ASME
No reproduction or networking permitted without license from IHS
Not for Resale

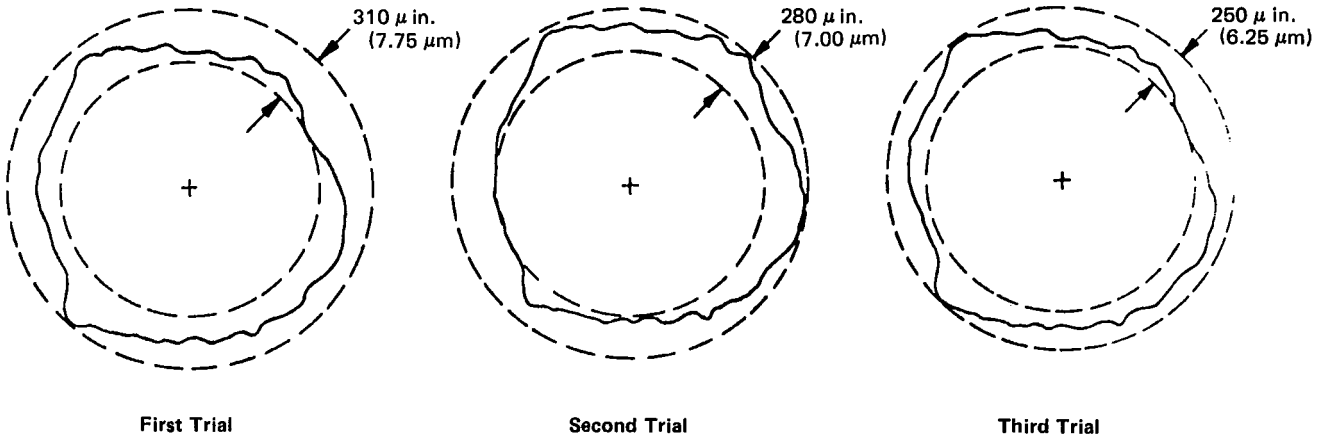

FIG. A16 DETERMINATION OF MINIMUM RADIAL SEPARATION

it can be defined mathematically, the LSC center is unique and can be found without trial and error methods. The method is well suited to digital computer analysis and the LSC center can also be located by analog electronic circuits. For hand calculations, the LSC method is slower and more subject to gross errors than the MRS method. Figure A17 is a description of the LSC method, abstracted from Section A3 of the British Standard 3730:1964 [para. C1(f)]. A proof of the formulae and guidance on the effect of the number of radial ordinates used can be found in the same reference.

A11.3 Maximum Inscribed and Minimum Circumscribed Circle Centers

These items are self-explanatory. The error motion value is the difference in radii to a second circle drawn about the same center so as to just contain the polar plot. These centers are sometimes used in roundness measurement and are included in this Standard for completeness in view of the relationship already discussed between radial motion and part roundness. For example, assume a circular part has a machined profile in accordance with the total radial motion polar plot and that it is placed in a perfectly round ring gage of the smallest diameter that will accept the part. Then the total radial motion value about the MCC center represents the largest gap between the part and gage, and, if the part is rotated in the ring gage, it will rotate about the MCC center.

A11.4 Polar Chart Center

As noted previously, fundamental axial motion is a real property of an axis of rotation rather than an error analogous to centering error. As a consequence, the total and average axial motion values are always measured using concentric circles drawn from the polar chart (PC) center. If it is desired to break the average axial motion values into fundamental and residual axial motion components, then any of the above four methods can be used to find the best fit center of the residual axial motion polar plot. The radial distance between this best-fit center and the PC center is the *fundamental axial motion* value (also referred to as the axial motion center offset). The MRS center is the preferred center and is to be assumed unless another center is specified.

Since face motion involves the same fundamental component as axial motion, it follows that total and average face motion should also be based on the PC center. However, if face motion is measured directly from a master flat mounted on the axis of rotation, then squareness error of the flat to the axis of rotation will introduce a second fundamental motion component. This component cannot be separated from that due to the axis unless the fundamental axial motion value is known. If the latter is known, the simplest procedure is to assess the residual portion of the face motion polar plot from the appropriate polar plot center and then add the fundamental axial motion value to obtain the desired result.

In the general case of error motion at an arbitrary angle ϕ to the Z reference axis, the fundamental error motion is equal to cos ϕ times the fundamental axial motion. Therefore the addition procedure of the preceding paragraph can be used, except that the added quantity is the fundamental axial motion times cos ϕ.

Finally, for tilt motion, the nonexistence of fundamental tilt motion requires the use of one of the four polar plot centers, with the polar chart center never being used.

Copyright ASME International
Provided by IHS under license with ASME
No reproduction or networking permitted without license from IHS
Not for Resale

In determining the least squares center and circle, the position of the center of the least squares circle and the value of its radius can be calculated from simple approximate formulae.

Referring to the figure below, the practical procedure is as follows:

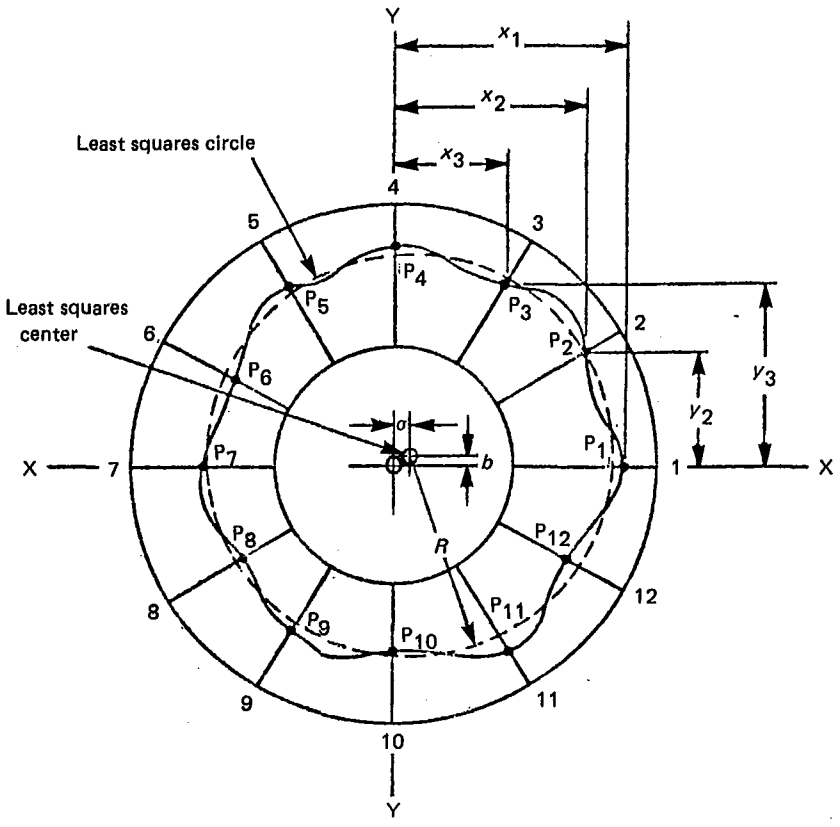

Determination of Least Squares Center and Circle

From the center of the chart, draw a sufficient even number of equally spaced radial ordinates. In the illustration they are shown numbered 1–12. Two of these at right angles are selected to provide a system of rectangular coordinates X-X and Y-Y.

The distances of the points of intersection of the polar graph with these radial ordinates, P_1 to P_{12}, are measured from the axes X-X and Y-Y, taking positive and negative signs into account.

The distances *a* and *b* of the least squares center from the center of the paper are calculated from the following approximate formulae:

$$a = \frac{2 \times \text{sum of } x \text{ values}}{\text{number of ordinates}} = \frac{2\Sigma x}{n} \qquad b = \frac{2 \times \text{sum of } y \text{ values}}{\text{number of ordinates}} = \frac{2\Sigma y}{n}$$

The radius *R* of the least squares circle, if wanted, is calculated as the average radial distance of the points P from the center; that is:

$$R = \frac{\text{sum of radial values}}{\text{numbers of ordinates}} = \frac{\Sigma r}{n}$$

In practice, if it is required to know only the radial width of the zone enclosing the curve, there is no point in finding *R*, and it is sufficient to draw the inscribing and circumscribing circles from the least squares center.

FIG. A17 DETERMINATION OF LEAST SQUARES CENTER AND CIRCLE [para. C1(f)]

(Extract from BS 3730:1964. Reproduced by permission of the British Standards Institution. NOTE: BS 3730:1964 has been superseded by BS 3730:1982.)

Copyright ASME International
Provided by IHS under license with ASME
No reproduction or networking permitted without license from IHS
Not for Resale

A11.5 Asynchronous Error Motion Value

The asynchronous motion value if found from the total error motion polar plot as the maximum radial width of the "cloud band" at any angular position around the circumference. It is the only measurement which does not employ concentric circles, since it involves the radial variation at a particular angle rather than the radial variation around the full circumference.

To be strictly correct, the asynchronous error motion value should be measured along a radial line from the polar chart (PC) center rather than from a best-fit center, even though this is contrary to what seems intuitively correct. Figure A18 illustrates this point by means of a computer generated plot of a high frequency sinusoid of uniform amplitude which is superimposed on a limacon. The sinusoid amplitude is constant if it is measured radially from the PC center, as it should be, but is up to 8% smaller (in this case) if it is measured radially from the MRS center.

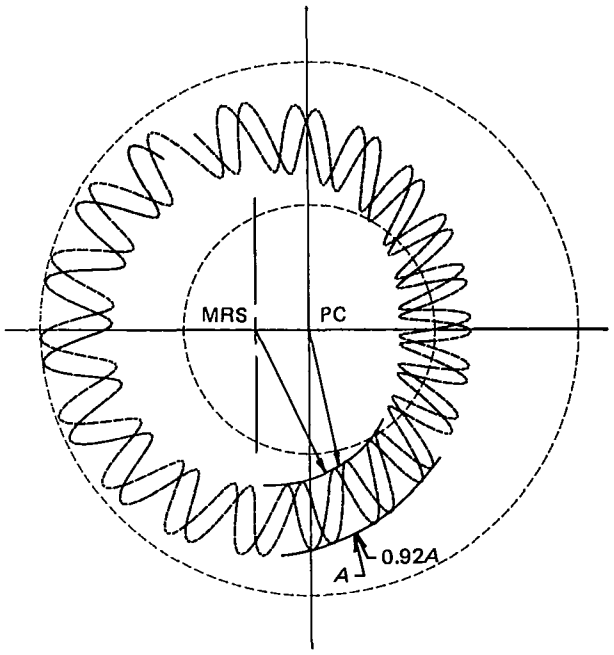

FIG. A18 ASYNCHRONOUS MOTION ASSESSMENT — CONSTANT-AMPLITUDE SINUSOID WITH CENTERING ERROR, SHOWING PROPER MEASUREMENT ALONG A RADIUS FROM PC CENTER

A12 AXIS AVERAGE LINE

The definition given in para. 2.1 for an *axis of rotation* is descriptive rather than technical, serving as a starting point in developing a more rigorous set of definitions for error motions and their measurement. However, a definition that specifies the precise location of an axis of rotation is desirable. For this purpose, the *axis average line* is defined as the line passing through two axially separated radial motion polar plot centers (see para. 2.16).

A13 ROTATING SENSITIVE DIRECTION MEASUREMENTS

As noted in para. A2.3, the sensitive direction rotates with respect to the machine frame in those cases in which the workpiece is supported from the machine frame and the tool or gagehead is supported from the axis of rotation. Boring machines and certain roundness measuring instruments are examples of machines having a rotating sensitive direction.

In principle, the same concepts regarding error motion of an axis of rotation apply for a rotating sensitive direction as for a fixed sensitive direction. This can be understood by placing the observer on the tool or gagehead, so that the workpiece appears to rotate. It will be assumed that the reader is already familiar with these concepts from the preceding Sections of this Appendix, and this Section deals with the differences involved in measuring and displaying the error motion polar plot.

Axial motion is the only measurement which is independent of whether the sensitive direction is fixed or rotating, and hence is most easily measured by a fixed gagehead sensing along the Z reference axis.

For low speed rotary axes such as rotary tables, trunnions, etc., both fixed and rotating sensitive direction cases can be dealt with by use of a polar recorder whose angular drive is mechanically or electrically synchronized to the axis of rotation. For the rotating sensitive direction, the master test ball is supported from the machine frame and the gagehead is supported on the axis of rotation. For one or a few revolutions of the axis, it is usually possible to coil the gagehead cable around the axis in a noninfluencing manner; for continuous rotation, slip rings or their equivalent are necessary.

For high speed axes, the frequency response of polar recorders is usually inadequate since the polar plot may contain frequencies that are orders of magnitude higher than the axis rotational frequency.

The oscilloscope with a camera attachment is a more suitable instrument, but since it employs rectilinear rather than polar coordinates, means must be provided to generate a base circle and to cause the error motion to appear as a radial deviation from the base circle.

Copyright ASME International
Provided by IHS under license with ASME
No reproduction or networking permitted without license from IHS
Not for Resale

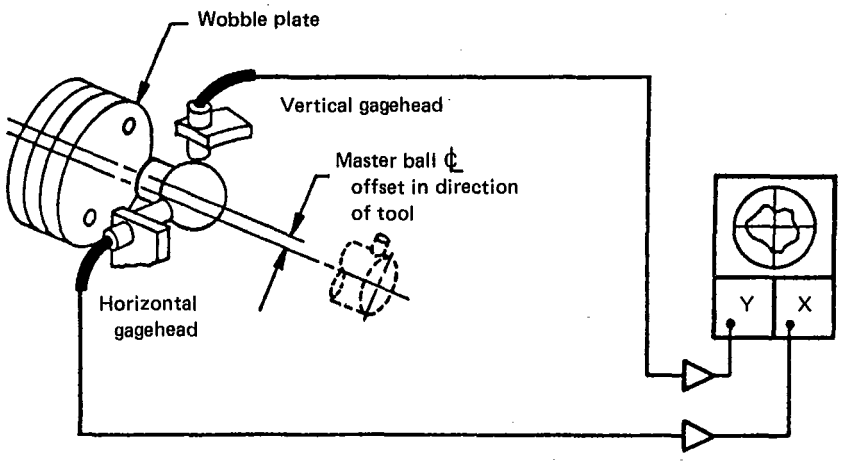

FIG. A19 TEST METHOD FOR RADIAL MOTION WITH A ROTATING SENSITIVE DIRECTION [TLUSTY, para. C1(d)]

The use of the oscilloscope is simplest in the case of radial motion measurement with a rotating sensitive direction, using a method described by Tlusty [see para. C1(d)]. Figure A19 is a schematic diagram showing horizontal and vertical gageheads which sense radially against a master test ball. The gagehead signals are amplified and fed to the respective horizontal and vertical axes of the oscilloscope. By use of a wobble plate, the master ball is made eccentric to the Z reference axis. For a perfect axis of rotation, the result would be a perfect circle as the axis rotates. For an imperfect axis, radial motion in the direction of the master ball eccentricity alters the shape of the oscilloscope display. Motion at right angles to the master ball eccentricity moves the oscilloscope pip along a tangent to the base circle, causing a negligible effect on the shape. Thus the arrangement yields a measurement of radial motion along a rotating sensitive direction which is parallel to a line from the Z reference axis to the geometric center of the eccentric master ball. If the tool or gage can be mounted on the axis in only one angular orientation, the master ball must be eccentric in this direction. If the orientation is arbitrary, then the axis should be tested with the ball eccentric in a number of different directions.

A14 FIXED SENSITIVE DIRECTION MEASUREMENTS

Use of an oscilloscope for radial motion measurement with a fixed sensitive direction requires a separate means for generating the base circle. Figure A20 shows a method described by Bryan et al. [see para. C1(e)]. Two circular cams, eccentric by 0.005 in. in perpendicular directions, are sensed by comparatively low magnification gageheads to generate sine and cosine signals for the base circle; a single cam with the gageheads 90 deg. apart could also be used. Radial motion is detected by a third high magnification gagehead sensing against a master test ball which is centered (as closely as possible) on the Z reference axis. The sine and cosine signals are each multiplied by the radial motion signal using Hall-effect multipliers and are then fed into the two axes of the oscilloscope. The modulation of the base circle by the signal from the fixed radial motion gagehead yields a polar plot of radial motion versus the angular position of the axis of rotation. Vanherck [see para. C1(g)] has tested a modification in which a small (2 oz.) commercial synchro unit is physically attached to the axis of rotation to replace the eccentric cams and low magnification gageheads as the sine-cosine signal generator. The advantages are lower cost, less difficulty in obtaining an accurately round base circle, and simplification of the test setup, with negligible influence on the axis from the synchro attachment except in the most exacting situations.

A15 CONSIDERATIONS ON THE USE OF THE TWO-GAGEHEAD SYSTEM FOR A FIXED SENSITIVE DIRECTION

Since the oscilloscope test method of Fig. A20 requires special electronic equipment that is not commercially available, it is natural to consider substituting the two gagehead system of Fig. A19 for measuring radial motion with a fixed sensitive direction. If this substitution is made, the resulting radial motion polar plot will

Copyright ASME International
Provided by IHS under license with ASME
No reproduction or networking permitted without license from IHS
Not for Resale

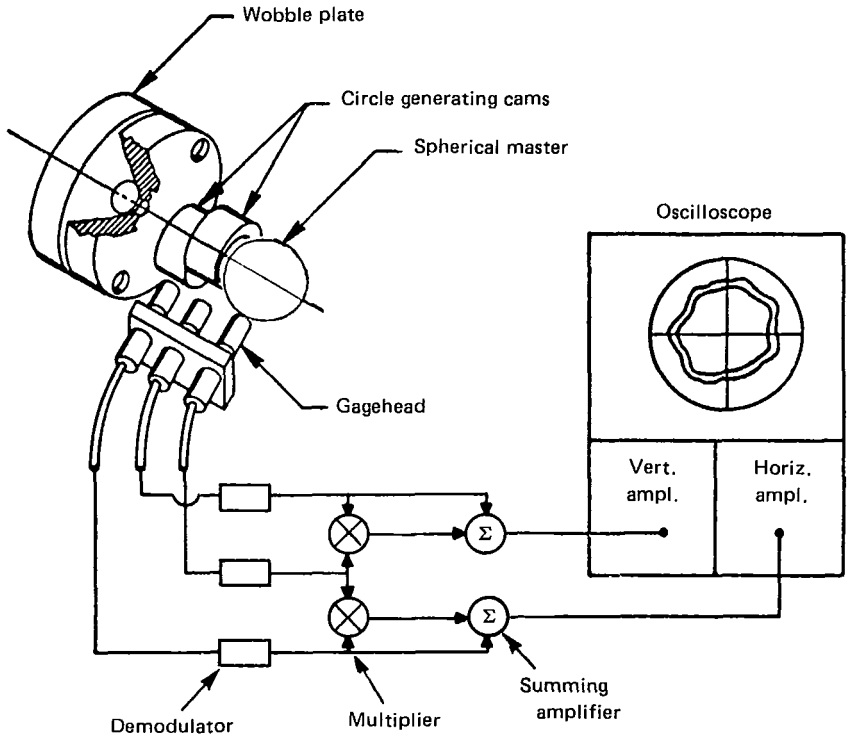

FIG. A20 TEST METHOD FOR RADIAL MOTION WITH A FIXED SENSITIVE DIRECTION [BRYAN, ET AL., para. C1(e)]

(Courtesy of University of California, Lawrence Livermore National Library and U.S. Department of Energy)

not be representative of the potential part out-of-roundness as discussed in para. A7.2. If $\theta = 0$ deg. is the fixed sensitive direction, then the polar plot reflects radial motion in this direction only in the vicinity of $\theta = 0$ deg. and $\theta = 180$ deg. Moreover, if a given localized movement of the axis of rotation occuring at $\theta = 0$ deg. appears as a peak on the polar plot, the same movement occurring at $\theta = 180$ deg. will have an undesired sign reversal and will appear as a valley. At $\theta = 90$ deg. and $\theta = 270$ deg. the same movement will not register on the polar plot.

Despite the above observations, it still appears intuitively plausible that the radial motion value should be roughly the same for both fixed and rotating sensitive directions, even if the details of the polar plot are different. This view appears reasonable if the factor of concern is asynchronous radial motion. However, for average radial motion, Donaldson [see para. C1(h)] has noted a case giving precisely the opposite result, in which an axis which exhibits an elliptical pattern when tested in a fixed sensitive direction is free of radial motion when tested in a rotating sensitive direction. The case occurs for the following motions:

$$\Delta X(\theta) = A \cos 2\theta \quad \text{(A8)}$$

$$\Delta Y(\theta) = A \sin 2\theta \quad \text{(A9)}$$

where the coordinate system is that of Fig. A9, sketch (a). With a fixed sensitive direction along the X axis, the radial motion polar plot has the equation

$$r(\theta) = r_o + A \cos 2\theta \quad \text{(A10)}$$

where r_o is the base circle radius. Eq. A10 represents an elliptical shape, having a value $r_o + A$ at $\theta = 0$ deg. and $\theta = 180$ deg. and a value of $r_o - A$ at $\theta = 90$ deg. and $\theta = 270$ deg. The radial motion value based on any of the polar profile centers is $2A$. If the sensitive direction rotates with angle θ, the radial motion is given by the equation

$$r(\theta) = r_o + \Delta X(\theta) \cos \theta + \Delta Y(\theta) \sin \theta \quad \text{(A11)}$$

Figure A21 shows the resolution of $\Delta X(\theta)$ and $\Delta Y(\theta)$ into components along the rotating sensitive direction

Copyright ASME International
Provided by IHS under license with ASME
No reproduction or networking permitted without license from IHS
Not for Resale

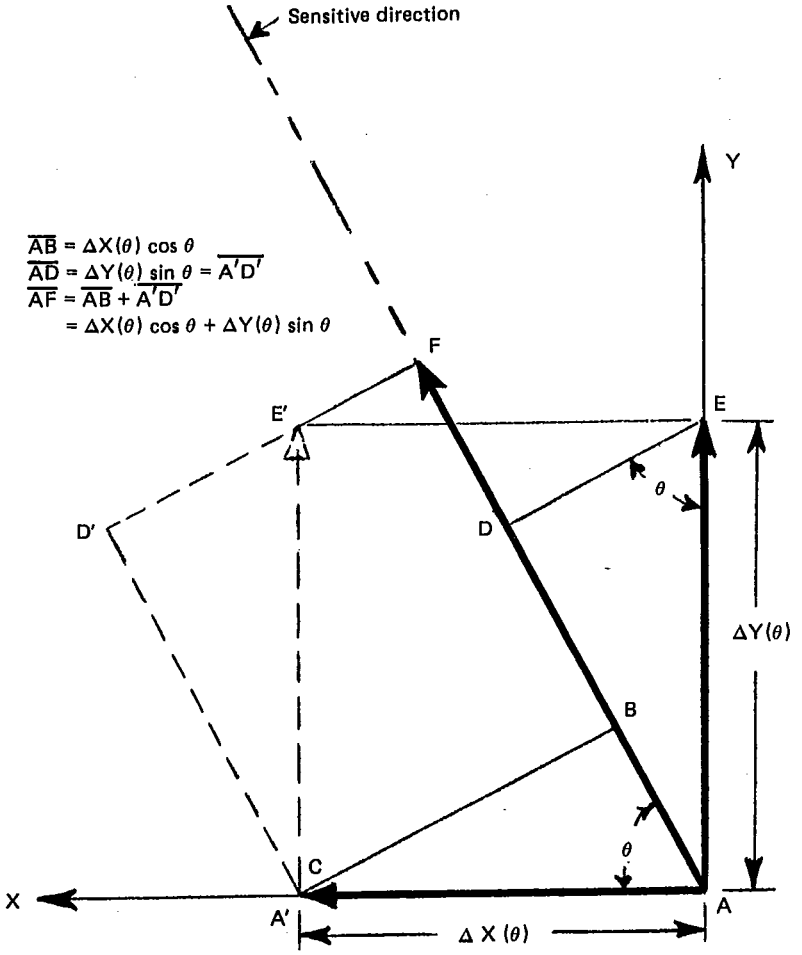

FIG. A21 VECTOR DIAGRAM FOR ROTATING SENSITIVE DIRECTION

Copyright ASME International
Provided by IHS under license with ASME
No reproduction or networking permitted without license from IHS
Not for Resale

that leads to Eq. A11. Combining Eqs. A8 and A9 with Eq. A11 and using the trigonometric identities

$$\cos \alpha \cos \beta = \frac{1}{2} [\cos (\alpha - \beta) + \cos (\alpha + \beta)] \quad \text{(A12)}$$

$$\sin \alpha \sin \beta = \frac{1}{2} [\cos(\alpha - \beta) - \cos (\alpha + \beta)] \quad \text{(A13)}$$

the result is

$$r(\theta) = r_o + \frac{A}{2} [\cos \theta + \cos 3\theta] + \frac{A}{2} [\cos \theta - \cos 3\theta] = r_o + A \cos \theta \quad \text{(A14)}$$

Equation A14 is the equation of a circle which is offset from the origin by a distance A (aside from a second-order limacon distortion as discussed in para. A7.5), and hence the axis would be perfect if tested by the two gagehead system.

Two additional comments can be made on the above finding. First, it can be argued that if the offset circle is assessed by concentric circles from the polar chart (PC) center, then a value of $2A$ is obtained, as with the fixed sensitive direction. However, there is no way to carry out the initial electronic zeroing to locate the PC center, since the base circle cannot be generated independently of the polar profile using the test method of Fig. A19. Secondly, the view might be taken that the above example is a mathematical oddity which is unlikely to occur in practice. In this regard it can be noted that radial motion polar plots commonly exhibit an elliptical pattern, and that to the extent that the overall patterns in the X and Y directions contain components as given in Eqs. A8 and A9, these components will not contribute to the measured radial motion value.

A16 DIGITAL COMPUTER MEASUREMENT SYSTEM

A digital computer provides an alternative basis for a system to collect, manipulate, and present data from axis of rotation measurements. Vanherck and Peters [see para. C1(g)] describe a system in which the signal from a radially sensing gagehead [as in Fig. A9, sketch (a)] is sampled at closely spaced angular intervals, using a perforated disk mounted on the axis and a photoelectric trigger. The samples are converted to digital form and stored for subsequent calculation and display of the total, average, and asynchronous radial motion polar plots with elimination of the centering error; location of the MRS, LSC, MIC, and MCC centers, and the radial motion values from these centers. In addition, three-dimensional representation (in the form of a helix over successive revolutions), master ball roundness error storage and automatic correction (after measurement by one of the methods of Appendix B), frequency content of the radial motion signal by the Fast-Fourier transform method, and zero-phase-shift filtering are features of the digital measurement system which would be difficult to incorporate in an analog system.

Another potential advantage of the digital system is the ease with which it can deal with arbitrary fixed or rotating sensitive directions. By adding a second radially sensing gagehead at 90 deg. to the first, similar to that shown in Fig. A19, the radial motion along a sensitive direction at any angle ϕ to the first gagehead can be calculated by the computer from the equation

$$r(\theta) = r_o + \Delta X(\theta) \cos \phi + \Delta Y(\theta) \sin \phi \quad \text{(A15)}$$

where $\Delta X(\theta)$ and $\Delta Y(\theta)$ are the two gagehead signals. For a rotating sensitive direction having any angle ϕ relative to $\theta = 0$, the radial motion using the same signals is given by

$$r(\theta) = r_o + \Delta X(\theta) \cos (\theta + \phi) + \Delta Y(\theta) \sin (\theta + \phi) \quad \text{(A16)}$$

By adding a second pair of 90 deg. gageheads in a different axial plane, a similar generality is obtained in the measurement of tilt motion; with a fifth gagehead sensing axially, the error motion can be calculated in any direction at any location (refer to Fig. A7).

Copyright ASME International
Provided by IHS under license with ASME
No reproduction or networking permitted without license from IHS
Not for Resale

APPENDIX B
ELIMINATION OF MASTER BALL ROUNDNESS ERROR

(This Appendix is not a part of ANSI/ASME B89.3.4M -1985 but is included for information purposes only.)

B1 Introduction 39

B2 The Reversal Method 39
B2.1 Procedure *P* 39
B2.2 Procedure *S* 41

B3 The Multistep Method 41

B4 Practical Considerations 41

Figures
B1 Schematic Test Setups 40
B2 Error Separation by Profile Averaging 40
B3 The Multistep Method 42

Table
B1 Procedure *P* and Procedure *S* 41

Copyright ASME International
Provided by IHS under license with ASME
No reproduction or networking permitted without license from IHS

Not for Resale

APPENDIX B
ELIMINATION OF MASTER BALL ROUNDNESS ERROR

(This Appendix is not part of ANSI/ASME B89.3.4M-1985 but is included for information purposes only.)

B1 INTRODUCTION

Measurements of radial motion are directly influenced by the out-of-roundness of the test ball or other circular master against which the gagehead senses. This Appendix describes methods for separating the out-of-roundness of the master from the radial motion of the axis of rotation. These methods can be described as "multi-orientation" error separation techniques since they involve taking two or more measurements with differing relative orientations between master and spindle. When correctly applied, they are a very effective means of accurately determining test ball errors. The two most widely used techniques, the "reversal" and "multi-step" methods, are described here.

B2 THE REVERSAL METHOD

The reversal method has been described by Donaldson [para. C1(h)] and is also contained in Appendix D2.5 of ANSI B89.3.1 [para. C1(a)] The method requires two profile measurements to be taken, in the sec-the orientations of both the part and the gagehead are reversed by 180 deg. relative to the spindle. The relative position of part and gagehead is unchanged while the effect of the spindle radial motion on the gagehead at any position is equal and opposite. Thus the part or master ball roundness error can be extracted as the mean of the two traces while the difference gives the spindle radial motion.

The method is described in detail below. In the interest of consistency, the same notation is used here as in Appendix D2.5 of ANSI B89.3.1, with $P(\theta)$ (for part) representing the out-of-roundness of the master and $S(\theta)$ (for spindle) representing the radial motion. It is assumed that the axis of rotation is free of asynchronous radial motion; means of dealing with asynchronous motion will be discussed in Section B4. The method can be divided into two procedures: Procedure *P*, which yields the roundness error of the master, and Procedure *S*, which yields the radial motion.

B2.1 Procedure *P*

Procedure *P* begins by recording an initial polar plot; the deviations from the base circle will be designated at $T_1(\theta)$. Figure B1, sketch (a) shows a schematic diagram of the test arrangement with the arbitrary initial positions being marked as $\theta = 0$ deg. by coincident marks on the master, the gagehead, the shaft, and the housing of the axis of rotation. The recorded value of $T_1(\theta)$ is the sum of the master roundness profile $P(\theta)$ and the radial motion $S(\theta)$

$$T_1(\theta) = P(\theta) + S(\theta) \qquad \text{(B1)}$$

It is assumed that the sign convention for roundness measurement is used so that hills and valleys on the polar plot correspond to hills and valleys on the master. The second step of Procedure *P* is to make a second polar plot $T_{2P}(\theta)$ using the arrangement of Fig. B1, sketch (b), in which the shaft and housing marks are coincident at $\theta = 0$ deg., but the master and gagehead positions are reversed (rotated 180 deg. about the axis of rotation). The same sign convention must be used as for $T_1(\theta)$. Comparison of Figs. B1, sketch (a) and B1, sketch (b) shows that the out-of-roundness of the master is recorded in the same manner since the relative position of the gagehead and the master is unchanged. However, radial motion is recorded with a reversed sign in Fig. B1, sketch (b) since a movement of the spindle toward the gagehead in Fig. B1, sketch (a) becomes a movement away from the gagehead in Fig. B1, sketch (b). Expressed as an equation,

$$T_{2P}(\theta) = P(\theta) - S(\theta) \qquad \text{(B2)}$$

Adding Eqs. (B1) and (B2) causes $S(\theta)$ to cancel. Solving for $P(\theta)$ gives

$$P(\theta) = \frac{T_1(\theta) + T_{2P}(\theta)}{2} \qquad \text{(B3)}$$

Copyright ASME International
Provided by IHS under license with ASME
No reproduction or networking permitted without license from IHS
Not for Resale

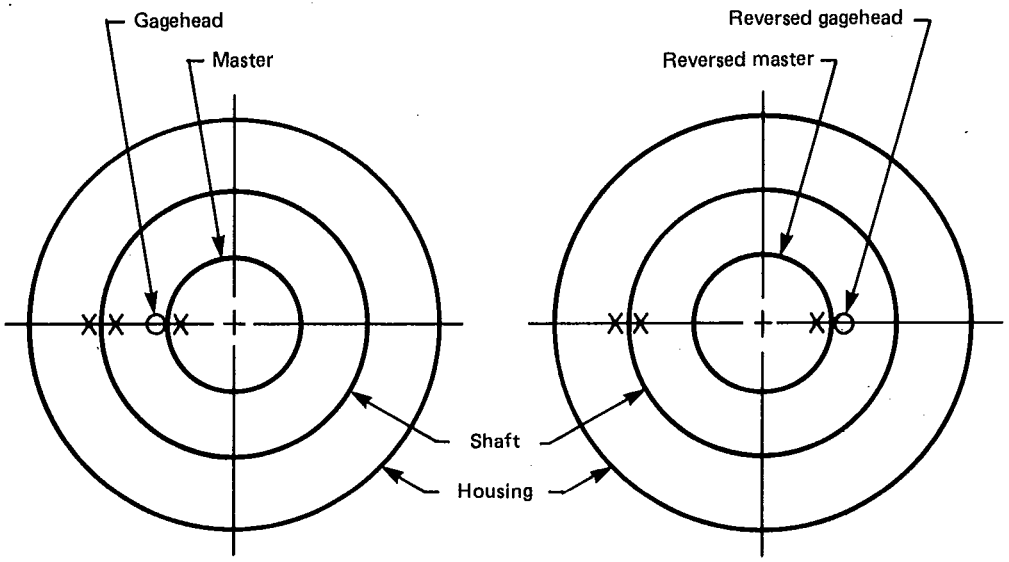

(a) For $T_1(\theta)$ (b) For $T_{2P}(\theta)$ and $T_{2S}(\theta)$

FIG. B1 SCHEMATIC TEST SETUPS

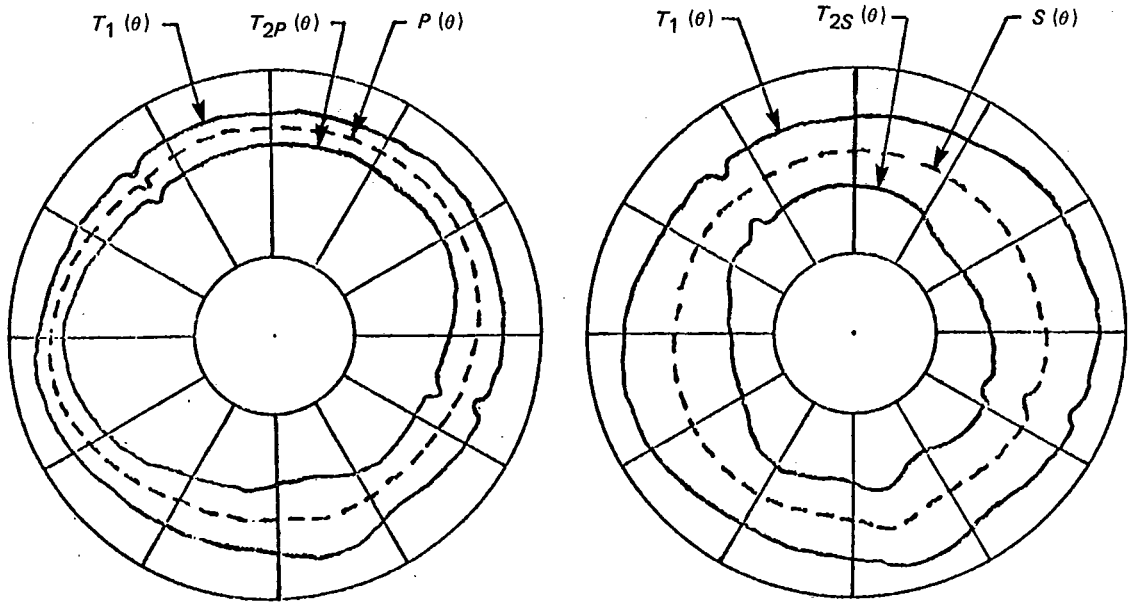

(a) Master Out-of-Roundness, $P(\theta)$ (b) Radial Motion, $S(\theta)$

FIG. B2 ERROR SEPARATION BY PROFILE AVERAGING

Copyright ASME International
Provided by IHS under license with ASME
No reproduction or networking permitted without license from IHS
Not for Resale

Equation B3 states that the out-of-roundness profile of the master, $P(\theta)$, is the average of the first and second polar plots. If $T_1(\theta)$ and $T_{2P}(\theta)$ are recorded on the same polar chart, $P(\theta)$ can be obtained by drawing a third polar plot halfway between the first two as shown in Fig. B2, sketch (a).

B2.2 Procedure *S*

Procedure S begins by recording an initial profile $T_1(\theta)$ as in Procedure P. The second step of Procedure S is also identical to the second step of Procedure P except that the sign convention must be reversed. Calling the second polar plot $T_{2S}(\theta)$ it follows that

$$T_{2S}(\theta) = -T_{2P}(\theta) = -P(\theta) + S(\theta) \qquad \text{(B4)}$$

If Eqs. (B1) and (B4) are added, $P(\theta)$ cancels; solving for $S(\theta)$ gives

$$S(\theta) = \frac{T_1(\theta) + T_{2S}(\theta)}{2} \qquad \text{(B5)}$$

Equation B5 states that a third polar plot drawn halfway between $T_1(\theta)$ and $T_{2S}(\theta)$ will be the radial motion polar plot $S(\theta)$.

Table B1 summarizes the above two procedures. Both procedures are equally valid with either a fixed or a rotating sensitive direction.

B3 THE MULTISTEP METHOD

The multistep method [Spragg and Whitehouse, para. C1(i)] entails taking a whole series of roundness profile measurements in each of which the part is stepped through equal angles relative to the spindle. The most effective way of implementing the method is to take n separate but equi-angled orientations adding up to 360 deg. as illustrated schematically in Fig. B3. It is then possible to separate the part error, which rotates with each step, from the spindle error, which remains stationary. To obtain the part error, it is necessary to pick one angle of the spindle's rotation and to identify the changes in gagehead signal at this angle for all the different orientations in sequence. To obtain spindle errors, a fixed angle on the part has to be chosen instead. Before the error separation can be carried out, the profile sets from each orientation have to be normalized, i.e., they have to be adjusted so that the profile eccentricity and radius are always the same. Because of the large amount of data processing, the method is much more conveniently carried out using a digital computer. As in the case of the reversal method, the technique can, in principle, be applied to either rotating workpiece (fixed sensitive direction) or rotating stylus (rotating sensitive direction) roundness instruments.

TABLE B1 PROCEDURE *P* AND PROCEDURE *S*

Procedure	Reverse for Record 2	Average
P	Master, gagehead	Master out-of-roundness
S	Master, gagehead, sign	Radial motion

B4 PRACTICAL CONSIDERATIONS

Several practical considerations arise in obtaining accurate results with error separation techniques. A crucial assumption in these techniques is that the part and spindle error profiles are highly repeatable. In the case of the part profile, this involves ensuring that the plane of measurement remains constant in each orientation without axial shift or tilt of the measurement track. Sensitivity to track location can be tested by examining the repeatability of the measured profile as the track is shifted by small amounts in the first setup of each method.

In the presence of asynchronous radial motion, the spindle error must be interpreted as the average radial motion polar plot, and the resulting accuracy depends upon being able to obtain a repeatable average radial motion in each orientation. This can be tested by successive recordings of the measured profile in the first setup. Repeatability over a single revolution is sometimes improved by turning the spindle backward to the same starting point, particularly with rolling element bearings. With digital computer-aided measurement systems, averaging over several profiles in each orientation can be used to minimize the effects of asynchronous spindle motion.

Both the reversal and multistep methods have their respective advantages and disadvantages. The reversal method may require modification of some commercial instruments and only works for radial error motions. Other error motions can be computed by measuring axial motion and tilt motion as well and then combining the three error profiles according to Eq. A4, which is practical only with the aid of a digital computer. The multistep method is directly applicable to any error mo-

Copyright ASME International
Provided by IHS under license with ASME
No reproduction or networking permitted without license from IHS
Not for Resale

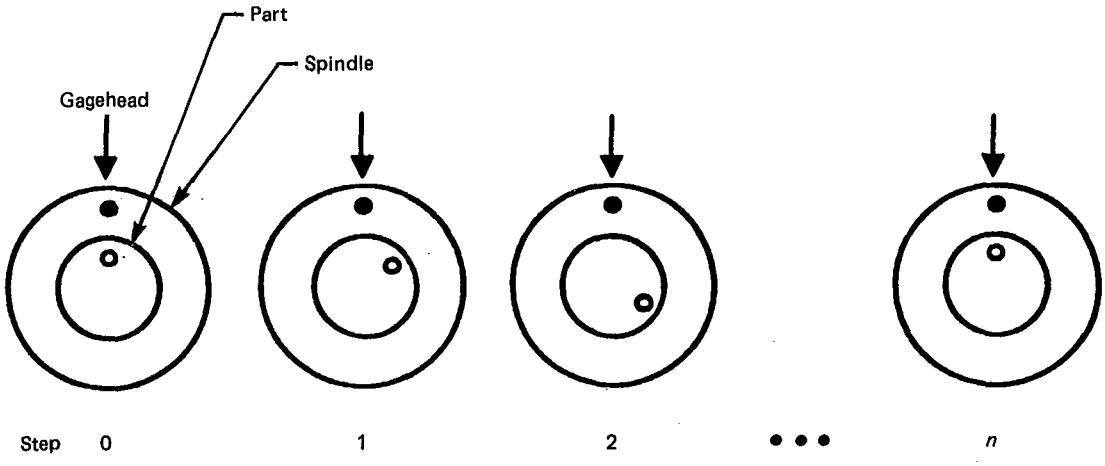

FIG. B3 THE MULTISTEP METHOD

tion but requires a digital computer for effective implementation. It also suffers to some extent from harmonic distortions and is therefore limited to errors involving only low numbers of undulations per revolution. Both methods are, however, capable of giving excellent results. A comparison of the two methods, using computer-aided roundness equipment [see para. C1(j)], has given agreement to within 0.04 μin. (0.001 μm) standard deviation.

Once the test ball errors are known it is a simple matter, in a digital system, to store them in memory. By subtracting them point-for-point from the measurement, the spindle radial motion can be evaluated accurately in one step.

Copyright ASME International
Provided by IHS under license with ASME
No reproduction or networking permitted without license from IHS
Not for Resale

APPENDIX C
REFERENCES

(This Appendix is not a part of ANSI/ASME B89.3.4M-1985 but is included for information purposes only.)

C1 REFERENCES

In the case of ANSI Standards, refer to the most recent edition.

(*a*) ANSI B89.3.1, Measurement of Out-of-Roundness

(*b*) ANSI B89.6.2, Temperature and Humidity Environment for Dimensional Measurement

(*c*) Schlesinger, G., Testing Machine Tools, Machinery Publishing Co.

(*d*) Tlusty, J., System and Methods of Testing Machine Tools, *Microtechnic*, vol. 13, 1959

(*e*) Bryan, J. B., Clouser, R. W., and Holland, E., Spindle Accuracy, *American Machinist*, Dec. 4, 1967

(*f*) British Standard 3730:1964, Assessment of Departures from Roundness

(*g*) Vanherck, P., and Peters, J., Digital Axis of Rotation Measurements, *CIRP Annals*, vol. 22/1, 1973

(*h*) Donaldson, R., A Simple Method for Separating Spindle Error from Test Ball Roundness Error, *CIRP Annals*, vol. 21/1, 1972

(*i*) Spragg, R., and Whitehouse, D., Procedures of the Institute of Mechanical Engineers, 182, 1968

(*j*) Chetwynd, D. G. and Siddall, G., Improving the Accuracy of Roundness Measurement, *Journal of Physics*, E: Sci. Instrum. 9, 1976

Copyright ASME International
Provided by IHS under license with ASME
No reproduction or networking permitted without license from IHS
Not for Resale

AMERICAN NATIONAL STANDARDS RELATED TO DIMENSIONAL METROLOGY

Measurement of Qualified Plain Internal Diameters for Use as Master Rings and Ring Gages B89.1.6M-1984
Precision Gage Blocks for Length Measurement (Through 20 in. and 500 mm) B89.1.9M-1984
Dial Indicators (for Linear Measurements) B89.1.10-1978
Methods for Performance Evaluation of Coordinate Measuring Machines B89.1.12M-1985
Measurement of Out-of-Roundness . . . . . B89.3.1-1972(R1979)
Axes of Rotation B89.3.4M-1985
Temperature and Humidity Environment for Dimensional Measurement . . . . . B89.6.2-1973(R1979)
Gages and Gaging for Unified Inch Screw Threads B1.2-1983
Gages and Gaging for Metric M Screw Threads B1.16M-1984
Preferred Limits and Fits for Cylindrical Parts . . . . . B4.1-1967(R1979)
Surface Texture (Includes ANSI Y14.36-1978) B46.1-1978

The ASME Publications Catalog shows a complete list of all the Standards published by the Society.

The catalog and binders for holding these Standards are available upon request.

L00066

Copyright ASME International
Provided by IHS under license with ASME
No reproduction or networking permitted without license from IHS
Not for Resale