ASME B89.1.17-2001

MEASUREMENT OF THREAD MEASURING WIRES

AN AMERICAN NATIONAL STANDARD

The American Society of Mechanical Engineers

Copyright ASME International
Provided by IHS under license with ASME
No reproduction or networking permitted without license from IHS

Not for Resale



The American Society of Mechanical Engineers

AN AMERICAN NATIONAL STANDARD

MEASUREMENT OF THREAD MEASURING WIRES

ASME B89.1.17-2001

Copyright ASME International
Provided by IHS under license with ASME
No reproduction or networking permitted without license from IHS
Not for Resale

Date of Issuance: March 15, 2002

This Standard will be revised when the Society approves the issuance of a new edition. There will be no addenda issued to this edition.

ASME will issue written replies to inquiries concerning interpretations of technical aspects of this standard.

ASME is the registered trademark of The American Society of Mechanical Engineers.

This code or standard was developed under procedures accredited as meeting the criteria for American National Standards. The Standards Committee that approved the code or standard was balanced to assure that individuals from competent and concerned interests have had an opportunity to participate. The proposed code or standard was made available for public review and comment that provides an opportunity for additional public input from industry, academia, regulatory agencies, and the public-at-large.

ASME does not "approve," "rate," or "endorse" any item, construction, proprietary device, or activity.

ASME does not take any position with respect to the validity of any patent rights asserted in connection with any items mentioned in this document, and does not undertake to insure anyone utilizing a standard against liability for infringement of any applicable letters patent, nor assume any such liability. Users of a code or standard are expressly advised that determination of the validity of any such patent rights, and the risk of infringement of such rights, is entirely their own responsibility.

Participation by federal agency representative(s) or person(s) affiliated with industry is not to be interpreted as government or industry endorsement of this code or standard.

ASME accepts responsibility for only those interpretations of this document issued in accordance with the established ASME procedures and policies, which precludes the issuance of interpretations by individuals.

No part of this document may be reproduced in any form,
in an electronic retrieval system or otherwise,
without the prior written permission of the publisher.

The American Society of Mechanical Engineers
Three Park Avenue, New York, NY 10016-5990

Copyright © 2002 by
THE AMERICAN SOCIETY OF MECHANICAL ENGINEERS
All Rights Reserved
Printed in U.S.A.

--`,,`,,`-`-`,,`,,`,`,,`---

Copyright ASME International
Provided by IHS under license with ASME
No reproduction or networking permitted without license from IHS

Not for Resale

CONTENTS

Foreword iv
Committee Roster v
Committee Correspondence vii

1 Scope 1

2 Definitions 1

3 References 1

4 General 1

5 Classification 2
5.1 Master Wires 2
5.2 Working Sets 2

6 Inch Series Specifications 2
6.1 Material 2
6.2 Wire Design 2
6.3 Wire Tolerances 2
6.4 “Best-Size” Wires 3
6.5 Wire Measurement Methods 4

7 Metric Series Specifications 5
7.1 Material 5
7.2 Wire Design 6
7.3 Wire Tolerances 6
7.4 “Best-Size” Wires 6
7.5 Wire Measurement Methods 6

Figures
1 Threading Measuring Wires 2
2 Measuring Instrument 7

Tables
1 “Best-Size” Wires for Inch Series 60 deg Threads 3
2 ”Best-Size” Wires for Inch Series 29 deg Acme Threads 4
3 “Best-Size” Wires for Inch Series 7/45 deg Buttress Threads 4
4 Thread Wire Measurement Specifications 5
5 “Best-Size” Wires for Metric Series 60 deg Threads 7
6 Thread Wire Measurement Specifications 7

Nonmandatory Appendices
A Measurement of Balls 9
B Examples of Uncertainty Budgets for Thread Wire Measurements 11

Copyright ASME International
Provided by IHS under license with ASME
No reproduction or networking permitted without license from IHS
Not for Resale

FOREWORD

This Standard is the result of the combined work of members of the ASME B1 Screw Thread Committee and the ASME B89 Dimensional Metrology Committee. It is the responsibility of the B1 Committee to determine how the pitch diameter of threads is measured. The B89 Dimensional Metrology Committee writes standards on specifications and procedures for dimensional measuring equipment. Thread wires differ from most items measured in that they are measured in a deformed condition to approximate the elastic deformation that occurs when they are used to measure pitch diameter.

For this reason when using this Standard it is necessary to ensure that the B1 standards referenced in this document are the latest edition of the B1 standard which specifies the conditions to be used when measuring the pitch diameters of threads.

The measurement of thread measuring balls is included as an appendix to the standard.

This edition of B89.1.17 was approved by the American National Standards Institute on October 24, 2001.

Copyright ASME International
Provided by IHS under license with ASME
No reproduction or networking permitted without license from IHS
Not for Resale

ASME B89 STANDARDS COMMITTEE
Dimensional Metrology

(The following is the roster of the Committee at the time of approval of this Standard.)

OFFICERS

R. B. Hook, *Chair*
M. Lo, *Secretary*

COMMITTEE PERSONNEL

D. Beutel, Caterpillar, Inc.
K. L. Blaedel, University of California
J. B. Bryan, Bryan Associates
T. Carpenter, U.S. Air Force
T. Charlton, Brown and Sharpe Manufacturing
R. J. Hocken, University of North Carolina
R. B. Hook, Metcon
M. Liebers, Professional Instruments Co.
M. Lo, The American Society of Mechanical Engineers
B. Parry, Boeing Co.
F. G. Parsons, Federal Products Co.
B. R. Taylor, Renishaw PLC
R. C. Veale, National Institute of Standards and Technology (Retired)

SUBCOMMITTEE B89.1 — LENGTH

R. C. Veale, *Chair*, National Institute of Standards and Technology (Retired)
D. Carlson, L. S. Starrett
D. Christy, Federal Products Co.
T. D. Doiron, National Institute of Standards and Technology
D. D. Friedel, L. S. Starrett
C. J. Fronczek, Jr., National Institute of Standards and Technology
M. R. Hamar, Hamar Laser Instruments, Inc.
D. T. Harris, Southern Gage, Inc.
G. L. Vander Sande, U.S. Army Armaments Research
W. A. Watts, Southern Gage, Inc.

WORKING GROUP B89.1.17 — MEASUREMENT OF THREAD MEASURING WIRES

R. C. Veale, *Chair*, National Institute of Standards and Technology (Retired)
A. Barrows, Kennametal
L. Dixon, Jr., General Electric
R. Dodge, Pennoyer-Dodge
T. D. Doiron, National Institute of Standards and Technology
D. T. Harris, Southern Gage, Inc.
R. Iavelli, Deltronic Corp.
L. Johnson, Johnson Gages
J. Kane, Boeing Co.
R. Knittel, Leitech — U.S., Ltd & AMTMA

Copyright ASME International
Provided by IHS under license with ASME
No reproduction or networking permitted without license from IHS
Not for Resale

W. C. Lehmus, GagedoctRx, LLC
R. Larzelere, Deltonic Corp.
S. Ramsdale, Honeywell
P. Schmitt, R. L. Schmitt Corp.
A. G. Strang, National Institute of Standards and Technology (Retired)
P. Tuller, Mahr Federal, Inc.

Copyright ASME International
Provided by IHS under license with ASME
No reproduction or networking permitted without license from IHS
Not for Resale

CORRESPONDENCE WITH B89 COMMITTEE

General. ASME Codes and Standards are developed and maintained with the intent to represent the consensus of concerned interests. As such, users of this Standard may interact with the Committee by requesting interpretations, proposing revisions, and attending Committee meetings. Correspondence should be addressed to:

Secretary, B89 Main Committee
The American Society of Mechanical Engineers
Three Park Avenue
New York, NY 10016

Proposing Revisions. Revisions are made periodically to the Standard to incorporate changes that appear necessary or desirable, as demonstrated by the experience gained from the application of the Standard. Approved revisions will be published periodically.

The Committee welcomes proposals for revisions to this Standard. Such proposals should be as specific as possible, citing the paragraph number(s), the proposed wording, and a detailed description of the reasons for the proposal, including any pertinent documentation.

Interpretations. Upon request, the B89 Committee will render an interpretation of any requirement of the Standard. Interpretations can only be rendered in response to a written request sent to the Secretary of the B89 Main Committee.

The request for interpretation should be clear and unambiguous. It is further recommended that the inquirer submit his/her request in the following format:

Subject:	Cite the applicable paragraph number(s) and the topic of the inquiry.
Edition:	Cite the applicable edition of the Standard for which the interpretation is being requested.
Question:	Phrase the question as a request for an interpretation of a specific requirement suitable for general understanding and use, not as a request for an approval of a proprietary design or situation. The inquirer may also include any plans or drawings which are necessary to explain the question; however, they should not contain proprietary names or information.

Requests that are not in this format will be rewritten in this format by the Committee prior to being answered, which may inadvertently change the intent of the original request.

ASME procedures provide for reconsideration of any interpretation when or if additional information that might affect an interpretation is available. Further, persons aggrieved by an interpretation may appeal to the cognizant ASME Committee or Subcommittee. ASME does not “approve,” “certify,” “rate,” or “endorse” any item, construction, proprietary device, or activity.

Attending Committee Meetings. The B89 Main Committee regularly holds meetings, which are open to the public. Persons wishing to attend any meeting should contact the Secretary of the B89 Main Committee.

--`,`-`-`,,`,,`,`,,`---
Copyright ASME International
Provided by IHS under license with ASME
No reproduction or networking permitted without license from IHS
Not for Resale

Copyright ASME International
Provided by IHS under license with ASME
No reproduction or networking permitted without license from IHS
Not for Resale

MEASUREMENT OF THREAD MEASURING WIRES

1 SCOPE

This Standard is intended to establish uniform practices for the measurement of thread measuring wires. The standard includes methods for the direct measurement of both master and working wires, and methods for the comparison measurement of working wires. The standard includes requirements for geometric qualities of thread measuring wires, the important characteristics of the comparison equipment, environmental conditions, and the means to ensure that measurements are made with an acceptable uncertainty level.

Wires covered by the standard include inch series 60-deg, 29-deg Acme, 7/45-deg Buttress, and metric 60-deg threads.

2 DEFINITIONS

"best-size" wire: the size of a wire that would touch at the pitch cylinder on a thread of zero lead angle.

"C" constant: a constant to be subtracted from the measurement over the wires to give the pitch diameter.

measurement uncertainty: parameter associated with the result of a measurement that characterizes the dispersion of the values that could reasonably be attributed to the measurand (quantity being measured).

3 REFERENCES

The following documents form a part of this Standard to the extent specified herein. The latest issue shall apply.

ASME B1.2, Gages and Gaging for Unified Inch Screw Threads

ASME B1.5, Acme Screw Threads

ASME B1.7M, Nomenclature, Definitions, and Letter Symbols for Screw Threads

ASME B1.8, Stub Acme Screw Threads

ASME B1.9, Buttress Inch Screw Threads 7°/45° Form With 0.6 Pitch Basic Height of Thread Engagement

ASME B1.16M, Gages and Gaging for Metric M Screw Threads

ASME B1.22M, Gages and Gaging for MJ Series Metric Screw Threads

ASME B1.30M, Screw Threads — Standard Practice for Calculating and Rounding Dimensions

Publisher: The American Society of Mechanical Engineers (ASME), Three Park Avenue, New York, NY 10016-5990; Order Department: 22 Law Drive, Box 2900, Fairfield, NJ 07007-2900

Federal Specification GGG-W-366b, Federal Specification Wire, Measuring: Gear, Thread, and General Purpose, General Services Administration, Washington, DC, May 8, 1967 (canceled)

Guide to the Expression of Uncertainty in Measurement

Publisher: International Organization for Standardization (ISO), 1 rue de Varembé, Case Postale 56, CH-1211, Genève, 20, Switzerland/Suisse

NIST Technical Note 1297, 1994 Edition, Guidelines for Evaluating and Expressing the Uncertainty of NIST Measurement Results

Puttock, M. J. and Thwaite, E. G., "Elastic Compression of Spheres and Cylinders at Point and Line Contact," National Standards Laboratory Technical Paper No. 25, Commonwealth Scientific and Industrial Research Organization (CSIRO), Australia, 1969

4 GENERAL

When the pitch diameter of external threads is measured using thread wires, good repeatability is only obtained when a sufficient force is used to push the wires against the sides of the thread flank. Elastic deformation occurs between the wires and thread flanks when the pitch diameter is measured in this manner. The practice in the United States is to measure the wires with a method that approximately reproduces the deformation that occurs between the thread and the wires. For the thread series listed in this Standard, the ASME B1 Committee has standardized the forces to be used when measuring pitch diameter. In measuring the pitch diameter of internal threads, and in some cases external threads, balls rather than wires are used. The use of balls for measuring pitch diameter is discussed in Appendix A.

Copyright ASME International
Provided by IHS under license with ASME
No reproduction or networking permitted without license from IHS
Not for Resale

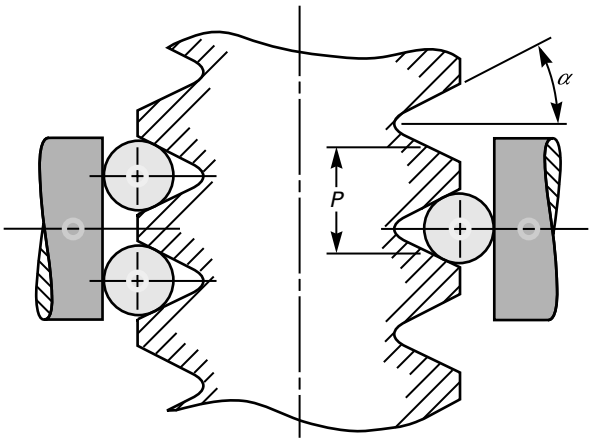

GENERAL NOTES:
(a) P is the pitch.
(b) α is the half-angle.

FIG. 1 THREADING MEASURING WIRES

5 CLASSIFICATION

Wires may be classified by their use as masters or working wires and by inch or metric series.

5.1 Master Wires

Master wires contain only one wire per pitch. The wires are used to measure working wires or, in some cases, other master wires.

5.2 Working Sets

Wires meant for measuring the pitch diameter of threaded gages or products consist of a three-wire set for each pitch. The wires may be measured either by comparison to a master, which has been measured in accordance with this Standard, or by directly measuring the wires in the manner described in the standard. See Fig. 1.

6 INCH SERIES SPECIFICATIONS

The material and design specifications for all master and working wires are the same, except that the working wires, which are three-wire sets, have a requirement that the variation in diameter among the three wires may not exceed a specified amount. A correction factor ("C" constant) must also be calculated and placed on the label for all except 29-deg Acme wires.

6.1 Material

The wires shall be made from alloy tool steel that has been stabilized to ensure dimensional stability. The wires shall be free from cracks and other detrimental defects. The hardness shall be a minimum of 62 on the Rockwell C scale. The surface finish shall not exceed 2 μin. R_a, using a 0.03-in. cutoff.

6.2 Wire Design

A set of measuring wires shall consist of three wires for each pitch, except for master wires, which contain one wire for each pitch. The length of the thread wires shall be a minimum of 1 in. Variations in the length of the three wires in any set shall not exceed 0.1 in.

6.3 Wire Tolerances

In order to accurately measure the pitch diameter of threaded gages and thread products, it is necessary to have accurate measurements of the wires. For example, an error of one unit in the mean diameter of thread measuring wires will cause an error of three units (for 60-deg threads) when measuring pitch diameter.

6.3.1 Master Wires. Diameters of master wires need to be known, in most cases, with an uncertainty of 5 μin. or less. The diameter of the wires shall be within 20 μin. of the "best-size" as shown in the tables or computed using the formulas in this document. The variations in diameter, including taper and out-of-roundness, shall not exceed 5 μin. over the central 0.5 in. of the wire.

6.3.2 Working Sets. A set of wires shall have the same diameter within 10 μin., and the average diameter shall be within 20 μin. of the specified "best-size" wire. The variations in diameter of each wire, including taper and out-of-roundness, shall not exceed 10 μin. over the central 1 in. of the wire. Each set shall display the TPI (threads per in.) and the average deformed diameter. Except for 29-deg Acme, the calculated wire constant ("C" constant), based on the measured mean diameter, shall also be displayed. The "C" constant for symmetrical threads is computed from the formula

$$C = w\,(1 + \operatorname{cosec}\,\alpha) - [\cot(\alpha)/2n]$$

where
w = the average of the set
α = the half-angle, and
n = the number of threads per in.
For 60-deg threads the formula reduces to

Copyright ASME International
Provided by IHS under license with ASME
No reproduction or networking permitted without license from IHS
Not for Resale

TABLE 1 "BEST-SIZE" WIRES FOR INCH SERIES 60 deg THREADS

Threads per in.	Pitch, in.	"Best-Size" Wires	"C" Constants	Threads per in.	Pitch, in.	"Best-Size" Wires	"C" Constants
120	0.008333	0.004811	0.00722	16	0.062500	0.036084	0.05413
100	0.010000	0.005774	0.00866	14	0.071429	0.041239	0.06186
96	0.010417	0.006014	0.00902	13	0.076923	0.044412	0.06662
90	0.011111	0.006415	0.00962	12	0.083333	0.048113	0.07217
80	0.012500	0.007217	0.01083	11.5	0.086957	0.050204	0.07531
72	0.013889	0.008019	0.01203	11	0.090909	0.052486	0.07873
64	0.015625	0.009021	0.01352	10	0.100000	0.057735	0.08660
56	0.017857	0.010310	0.01546	9	0.111111	0.064150	0.09623
50	0.020000	0.011547	0.01732	8	0.125000	0.072169	0.10825
48	0.020833	0.012028	0.01804	7.5	0.133333	0.076980	0.11547
44	0.022727	0.013122	0.01968	7	0.142857	0.082479	0.12372
40	0.025000	0.014434	0.02165	6	0.166667	0.096225	0.14434
36	0.027778	0.016038	0.02406	5.5	0.181818	0.104973	0.15746
32	0.031250	0.018042	0.02706	5	0.200000	0.115470	0.17321
30	0.033333	0.019245	0.02887	4.5	0.222222	0.128300	0.19245
28	0.035714	0.020620	0.03093	4	0.250000	0.144338	0.21651
27	0.037037	0.021383	0.03208	3.5	0.285714	0.164957	0.24744
26	0.038462	0.022206	0.03331	3.25	0.307692	0.177646	0.26647
24	0.041667	0.024056	0.03608	2.75	0.363636	0.209946	0.31492
22	0.045455	0.026243	0.03936	2.5	0.400000	0.230940	0.34641
20	0.050000	0.028868	0.04330	2	0.500000	0.288675	0.43301
18	0.055556	0.032075	0.04811				

CAUTION: "C" constants in the table are computed for the "best-size" wires. The "C" constant should always be computed using the actual wire size.

GENERAL NOTE: See ASME B1.2 for limitations on using "C" constant values in pitch diameter measurements.

$$C = 3w - 0.86602540P$$

where

$P = 1/n$ or the nominal thread pitch

NOTE: cosec $\alpha = 1/\sin \alpha$ and cot $\alpha = 1/\tan \alpha$

The above formula was used to compute the "C" constants given in Table 1. Calculation should be made with values carried out to at least eight digits with the final values rounded to six places for "best-size" wires and five places for the "C" constants.

6.4 "Best-Size" Wires

"Best-size" wires are defined as those that touch the thread flanks at the pitch diameter cylinder on a thread of zero helix (lead) angle. The "best-size" wire values for symmetrical threads are computed from the equation

$$\text{"Best-size" wire} = 0.5P \sec \alpha$$

where

P = pitch

α = thread half-angle

It is customary to use the nominal pitch and half-angle in calculating the "best-size" wire diameter.

NOTE: sec $\alpha = 1/\cos \alpha$

6.4.1 Inch Series 60 deg. "Best-size" wires and "C" constants for standard inch-series thread pitches are listed in Table 1.

6.4.2 29-deg Acme. "Best-size" wires for standard Acme thread pitches are computed using the same equation that are used for inch series 60-deg threads. In this case the half-angle or alpha (α) is 14.5 deg, not 30 deg. "Best sizes" wires for standard Acme 29-deg thread pitches are given in Table 2. The "C" constant is not given because it should be computed for each different pitch and diameter combination to be valid.

6.4.3 7/45-deg Buttress. "Best-size" wires for 7/45-deg Buttress threads are computed from the following equation:

$$\text{"Best-size" wire } (w) = 0.541\,469\,33P$$

The "C" constant is computed from the formula

$$\text{"C" constant} = \left[1 + \text{cosec}\left[(\alpha_1 + \alpha_2)/2\right] \cos\left[(\alpha_1 - \alpha_2)/2\right] w\right]$$

Copyright ASME International
Provided by IHS under license with ASME
No reproduction or networking permitted without license from IHS
Not for Resale

TABLE 2 "BEST-SIZE" WIRES FOR INCH SERIES 29 deg ACME THREADS

Threads per in.	Pitch, in.	"Best-Size" Wires	Threads per in.	Pitch, in.	"Best-Size" Wires
20	0.050000	0.025823	5	0.200000	0.103290
18	0.055556	0.028692	4.5	0.222222	0.114767
16	0.062500	0.032278	4	0.250000	0.129113
14	0.071429	0.036889	3.5	0.285714	0.147557
12	0.083333	0.043038	3	0.333333	0.172150
10	0.100000	0.051645	2.5	0.400000	0.206580
9	0.111111	0.057383	2	0.500000	0.258225
8	0.125000	0.064556	1.75	0.571429	0.295114
7	0.142857	0.073779	1.5	0.666667	0.344300
6	0.166667	0.086075	1	1.000000	0.516450
5.5	0.181818	0.093900			

GENERAL NOTE: See ASME B1.5 and B1.8 for limitations on using "C" constant values in pitch diameter measurement.

TABLE 3 "BEST-SIZE" WIRES FOR INCH SERIES 7/45 deg BUTTRESS THREADS

Threads per in.	Pitch, in.	"Best-Size" Wires	"C" Constants	Threads per in.	Pitch, in.	"Best-Size" Wires	"C" Constants
20	0.050000	0.027073	0.04094	4	0.250000	0.135367	0.20468
16	0.062500	0.033842	0.05117	3	0.333333	0.180490	0.27291
12	0.083333	0.045122	0.06823	2.5	0.400000	0.216588	0.32749
10	0.100000	0.054147	0.08187	2	0.500000	0.270735	0.40936
8	0.125000	0.067684	0.10234	1.5	0.666667	0.360980	0.54581
6	0.166667	0.090245	0.13645	1.25	0.800000	0.433175	0.65498
5	0.200000	0.108294	0.16374	1	1.000000	0.541470	0.81872

CAUTION: "C" constants in the table are computed for the "best-size" wires. The "C" constant should always be computed using the actual wire size.

GENERAL NOTE: See ASME B1.9 for limitations on using "C" constant values in pitch diameter measurements.

$$- P / (\tan \alpha_1 + \tan \alpha_2)$$

where

P = pitch
α_1 = pressure flank (7 deg), and
α_2 = trailing flank (45 deg)

or,

$$\text{"C" constant} = 3.156\,890\,53w - 0.890\,642\,81P \quad \text{for 7/45 buttress threads}$$

"Best-size" wires and "C" constants are given in Table 3. Additional information on the use of the "C" constant in pitch diameter measurements for buttress threads is given in ASME B1.9.

6.5 Wire Measurement Methods

6.5.1 Master Wires. To approximate the deformation that occurs when the wires are used to measure pitch diameter, the master thread wires are measured in a deformed condition. The wires are measured between a steel roll and a 0.375-in. diameter flat carbide contact under a specified force. The roll size and the specified force used in the measurements are given in Table 4.

Master wires may also be measured by direct comparison to other master wires that have been measured by the specified method.

6.5.1.1 Master 60-deg Inch Series. Measurements for master wires can be made using a universal measuring machine with flat parallel anvils. The instrument is zeroed with a cylinder of the specified size placed between the anvils. The instrument must be set

Copyright ASME International
Provided by IHS under license with ASME
No reproduction or networking permitted without license from IHS
Not for Resale

TABLE 4 THREAD WIRE MEASUREMENT SPECIFICATIONS

Threads per in.	Roll Size, in.	Measuring Force, oz
20 or less	0.75	40
Greater than 20 to 40	0.75	16
Greater than 40 to 80	0.125	8
Greater than 80 to 140	0.05	4
Greater than 140	0.02	2

to exert the correct force (Table 4). The wire is measured with the axes of the wire and cylinder at 90 deg apart. The measurement reported is the deformed diameter.

A variation of this method is to have an instrument composed of a fixed steel cylinder of the specified size and a movable carbide anvil. The instrument is zeroed with the anvil in contact with the fixed cylinder. (Note: It is important that the axis of the cylinder be parallel to the face of the opposing flat anvil.) The wire diameter is measured with the axis of the wire placed at 90 deg to the axis of the cylinder. A laser interferometer, or a scale of comparable accuracy, measures the displacement of the moving anvil.

It is possible to measure 60-deg master wires using a cylinder and a force other than that specified if the elastic limit of the wire is not exceeded and if corrections are made for the elastic deformations. However, the uncertainty of the measurement will be larger if there is a departure from the specified conditions. The elastic limit is exceeded for wires smaller than 0.012 in. at a 1-lb force when using the 0.75-in. roll. Equations for computing the deformation are given in Puttock and Thwaite's book (see para. 3).

6.5.1.2 29-deg Acme. All 29-deg Acme wires from 1 through 20 TPI are measured over a 0.75-in. roll using a 2.5-lb force.

6.5.1.3 7/45-deg Buttress. All 7/45-deg Buttress wires are measured over a 0.75-in. roll using a 2.5 lb-force.

6.5.2 Working Sets. Wires in three-wire sets can be measured in the same manner as given for master wires. It is more convenient, however, in most cases, to measure working wires by comparing them to a master wire. The master wires have already been measured in the deformed condition specified for thread wires; therefore, it is not necessary to make the comparisons over a roll. The comparisons can be made between flat parallel contacts using any reasonable force. Any comparison method that gives repeatable measurements with the appropriate uncertainty is permissible. Since the master and working wire are similar materials and the same force will be used in each measurement, it is not necessary to know the magnitude of the force, because the deformation on the master will be the same as on the working wire.

The wires can also be measured by comparing them in the same vee used to make the out-of-roundness measurement. When making the comparison in a vee the difference must be corrected for the magnification caused by the vee. For a 60-deg vee the true difference is the measured difference divided by 1.5.

6.5.2.1 60-deg Inch Series. Working wires must be measured for variations in the wire's radius (out-of-roundness). This can be done by measuring the up and down movement of the wire when rotated in a 60-deg vee. An alternate method, for all except the very small wires, is to measure the out-of-roundness using a tracer-type roundness measuring instrument.

6.5.2.2 29-deg Acme. Working Acme wires must be measured for variations in the wire's radius (out-of-roundness). This can be done by measuring the up and down movement of the wire when rotated in a 29-deg vee. Because of the tendency of the wire to wedge in the vee, the transducer measuring the up and down motion must exert a very light force on the wire. It is also acceptable to measure the out-of-roundness by rotating the wires in a 60-deg vee. An alternate method is to measure the out-of-roundness using a tracer-type roundness measuring instrument.

6.5.2.3 7/45-deg Buttress. It is not practical to measure the out-of-roundness of 7/45-deg Buttress wires using a vee of the same nominal angle. The out-of-roundness may be approximated by using the same vee as used for 60-deg wires. The alternate method of using a tracer-type roundness measuring instrument may also be used.

7 METRIC SERIES SPECIFICATIONS

In the United States, metric wires are measured the same way that inch series wires are measured.

The material and design specifications for all metric master and working wires are the same as for inch series wires.

7.1 Material

The wires shall be made from alloy tool steel that has been stabilized to ensure dimensional stability. The wires shall be free from cracks and other detrimental defects. The hardness shall be a minimum of 62 on the Rockwell C scale. The surface finish shall not exceed 0.05 μm R_a, using a 0.75-mm cutoff.

Copyright ASME International
Provided by IHS under license with ASME
No reproduction or networking permitted without license from IHS
Not for Resale

7.2 Wire Design

A set of measuring wires shall consist of three wires for each pitch, except for master wires, which contain one wire for each pitch. The length of the thread wires shall be a minimum of 25 mm. Variation in the length of the three wires in any set shall not exceed 3 mm.

7.3 Wire Tolerances

In order to accurately measure pitch diameter, it is necessary to have accurate measurements of the wires. For example, an error of one unit in the mean diameter of thread measuring wires will cause an error of three units (for 60-deg threads) when measuring pitch diameter.

7.3.1 Master Wires. Master wires need to be known, in most cases, with an uncertainty of 0.125 μm or less. The diameter of the wires shall be within 0.5 μm of the "best-size" wire as shown in the tables or computed using the formulas in this document. The variations in diameter, including taper and out-of-roundness, shall not exceed 0.125 μm over the central 12 mm of the wire.

7.3.2 Working Set. A set of wires shall have the same diameter within 0.25 μm, and the average diameter shall be within 0.5 μm of the specified "best-size" wire. The variations in diameter of each wire, including taper and out-of-roundness, shall not exceed 0.25 μm over the central 25 mm of the wire. The calculated wire constant ("C" constant), based on the measured mean diameter, shall also be displayed. The "C" constant for symmetrical threads is computed from the formula

$$C = (1 + \text{cosec } \alpha) - [\cot \alpha \, (P/2)]$$

where

w = the average diameter of the set
α = the half-angle, and
P = the pitch

For 60-deg threads the formula reduces to

$$C = 3w - 0.8660254P$$

The above formula was used to compute the "C" constants given in Table 5.

NOTE: cosec α = 1/sin α and cot α = 1/tan α.

7.4 "Best-Size" Wires

"Best-size" wires are defined as those that touch the thread flanks at the pitch diameter cylinder on a thread of zero helix (lead) angle. The "best-size" values for symmetrical threads are computed from the equation

$$\text{"best-size wire"} - 0.5 \, P \sec \alpha$$

where

P = pitch
α = thread half-angle

"Best-size" wires and "C" constants for common thread pitches are given in Table 5.

7.5 Wire Measurement Methods

7.5.1 Master 60-deg Metric Wires. To approximate the deformation that occurs when the wires are used to measure pitch diameter, the master thread wires are measured in a deformed condition. The wires are measured between a steel roll and a 9.5-mm carbide flat contact under a specified force. The roll size and the specified force are given in Table 6.

The measurements can be made using a universal measuring machine with flat parallel anvils. The instrument is zeroed with a cylinder of the specified size placed between the anvils. The instrument must be set to exert the correct force. The wire is measured with the axes of the wire and cylinder at 90 deg apart. The measurement reported is the deformed diameter.

A variation of this method is to have an instrument composed of a fixed steel cylinder of the specified size and a movable carbide anvil. The instrument is zeroed with the anvil in contact with the fixed cylinder. (Note: It is important that the axis of the cylinder be parallel to the face of the opposing flat anvil.) The wire diameter is measured with the axis of the wire placed at 90 deg to the axis of the cylinder. A laser interferometer, or a scale of comparable accuracy, measures the displacement of the moving anvil. (See Fig. 2.)

It is possible to measure 60-deg master wires using a cylinder and a force other than that specified if the elastic limit of the wire is not exceeded and if corrections are made for the elastic deformations. However, the uncertainty of the measurement will be larger if there is a departure from the specified conditions. The elastic limit is exceeded for wires smaller than 0.5 pitch at a 4.5-N force when using the 20-mm roll. Equations for computing the deformation are given in Puttock and Thwaite's book (see para. 3).

Master wires may also be measured by comparing them to other master wires that have been measured by the specified method.

Copyright ASME International
Provided by IHS under license with ASME
No reproduction or networking permitted without license from IHS
Not for Resale

TABLE 5 "BEST-SIZE" WIRES FOR METRIC SERIES 60 deg THREADS

Pitch, mm	"Best-Size" Wire	"C" Constant, mm	Pitch, mm	"Best-Size" Wire	"C" Constant, mm
0.2	0.11547	0.1732	1.75	1.01036	1.5155
0.225	0.12990	0.1949	2	1.15470	1.7321
0.25	0.14434	0.2165	2.5	1.44338	2.1651
0.3	0.17321	0.2598	3	1.73205	2.5981
0.35	0.20207	0.3031	3.5	2.02073	3.0311
0.4	0.23094	0.3464	4	2.30940	3.4641
0.45	0.25981	0.3897	4.5	2.59808	3.8971
0.5	0.28868	0.4330	5	2.88675	4.3301
0.6	0.34641	0.5196	5.5	3.17543	4.7631
0.7	0.40415	0.6062	6	3.46410	5.1962
0.8	0.46188	0.6928	7	4.04145	6.0622
0.9	0.51962	0.7794	8	4.61880	6.9282
1	0.57735	0.8660	9	5.19615	7.7942
1.25	0.72169	1.0825	10	5.77350	8.6603
1.5	0.86603	1.2990			

CAUTION: "C" constants in the table are computed for the "best-size" wires. The "C" constant should always be computed using the actual wire size.

GENERAL NOTE: See ASME B1.2 for limitations on using "C" constant values in pitch diameter measurements.

TABLE 6 THREAD WIRE MEASUREMENT SPECIFICATIONS

Pitch, mm	Roll Size, mm	Measuring Force, *N*
0.2 to 0.35	1.25	1.1
Greater than 0.35 to 0.6	3	2.2
Greater than 0.6 to 1.25	20	4.5
1.25 and greater	20	11.1

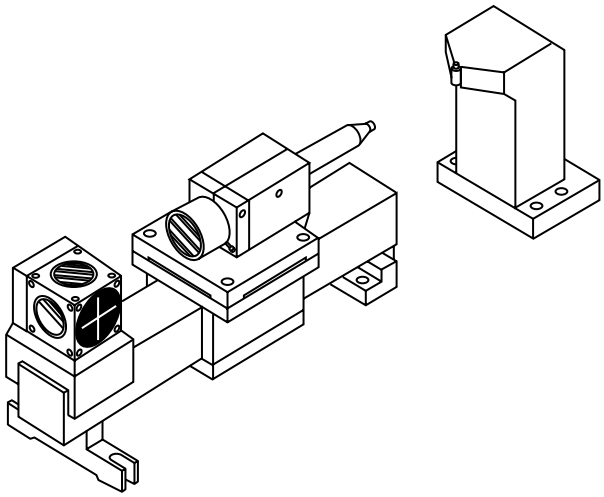

FIG. 2 MEASURING INSTRUMENT

Variations in diameter, including taper and out-of-roundness, along the central 12 mm of the wire shall not exceed 0.125 μm.

7.5.2 Working Sets. Wires in three-wire sets can be measured in the same manner as given for master wires. It is more convenient, however, in most cases, to measure working wires by comparing them to a master wire. The master wires have already been measured in the deformed condition specified for thread wires; therefore, it is not necessary to make the comparisons over a roll. The comparisons can be made between flat parallel contacts using any reasonable force. Any comparison method that gives repeatable measurements is permissible. It is not necessary to accurately know the force used as the deformation on the master will be the same as on the working wire.

The wires can also be measured by comparing them in the same vee used to make the out-of-roundness measurement. When making the comparison in a vee the difference must be corrected for the magnification caused by the vee. For a 60-deg vee the true difference is the measured difference divided by 1.5.

In addition to measuring the taper over the central 25 mm of the wire, working wires must be measured for variations in radius by measuring them in a vee of the same angle as the included thread angle in which they will be used. An alternate method for all except the very small wires is to measure the out-of-roundness using a tracer-type roundness measuring instrument.

Copyright ASME International
Provided by IHS under license with ASME
No reproduction or networking permitted without license from IHS
Not for Resale

Copyright ASME International
Provided by IHS under license with ASME
No reproduction or networking permitted without license from IHS
Not for Resale

NONMANDATORY APPENDIX A
MEASUREMENT OF BALLS

A1 INTRODUCTION

Balls are used to measure internal threads and some external threads with large lead angles. They may also be used instead of wires to measure external threads. The reported diameter of master balls are not, however, the deformed diameter as measured. For all master ball measurements, the reported diameter is the *undeformed* diameter. For this reason, when high-accuracy measurements are required, it is necessary to either measure the balls in the manner they are to be used or to apply an elastic deformation correction when using balls to measure pitch diameter.

For most applications when making pitch diameter measurements using balls, the deformation can be ignored. Some instruments that utilize balls set the gage to a master threaded ring gage; therefore, the deformation is the same for the master as for the test. In other applications where balls are used for pitch diameter measurements of internal threads, the measuring instrument is set with a plain master ring gage or a gap between wrung gage blocks. In almost all cases, it is not common practice to use the same force as is used to measure external gages with wires. If the force is light, in most cases the deformation can be ignored, but if a large force is used and low uncertainty is desired, the actual deformation should be calculated. When the measuring instrument is set with a gage block stack, the correction for deformation is twice the difference between a ball to a flat and a ball in the thread groove. Because in most cases a light force is used, the error due to elastic deformation can be ignored.

Coordinate measuring machines are another example where balls are used for internal pitch diameter measurements. Because the force on the probe cannot be easily changed, it is not common practice to change the existing force of the probe for a pitch diameter measurement. It is necessary to calculate the elastic deformation of the ball in the groove, if a low uncertainty measurement (uncertainty less than 100 μin.) is required.

Because of the numerous stylus materials, measurement methods, and measuring forces used in measuring internal pitch diameter, it is not possible to give a meaningful table for corrections. Each case must be calculated individually if the lowest uncertainty is required. The equation for computing the elastic deformation can be found in Puttock and Thwaite's book (see para. 3).

A2 BALL MEASUREMENT

The common procedure for measuring balls is to measure the balls between flat, parallel anvils under a specified force and convert the measurements to a zero force. Care must be taken that the elastic limit of the balls is not exceeded. The equation for computing the elastic deformation can be found in the previously cited work by Puttock and Thwaite.

The most common materials of balls used in pitch diameter measurements are tungsten carbide or ruby. The equation for computing the total deformation (both top and bottom) for a tungsten carbide ball when measured between carbide anvils is

$$\partial = 16 \times 10^{-6} \times 3\sqrt{\frac{p^2}{D}}$$

where

p = force, lb
D = ball diameter, in.

Deformations for selected sizes are given in Table A1. The values may differ by as much as 10% depending on the amount of cobalt in the tungsten carbide.

A3 SUMMARY

When proper corrections are made for the ball deformation, pitch diameter measurements made with either a ball or with wires will agree within the measurement uncertainty.

Copyright ASME International
Provided by IHS under license with ASME
No reproduction or networking permitted without license from IHS
Not for Resale

TABLE A1 EXAMPLE FOR TOTAL DEFORMATION OF TUNGSTEN CARBIDE BALLS MEASURED BETWEEN FLAT PARALLEL CARBIDE ANVILS

Ball Size, in.	Force, oz			
	2	4	8	16
0.001	41	65	. . .	. . .
0.005	24	38	60	. . .
0.01	19	30	48	76
0.02	15	24	38	60
0.05	11	28	28	44
0.1	9	14	22	35
0.5	5	8	13	21

GENERAL NOTE: All values in microinches.

Copyright ASME International
Provided by IHS under license with ASME
No reproduction or networking permitted without license from IHS Not for Resale

NONMANDATORY APPENDIX B
EXAMPLES OF UNCERTAINTY BUDGETS FOR THREAD WIRE MEASUREMENTS

B1 INTRODUCTION

In this example, we will develop an uncertainty budget to calculate the uncertainty of the measured value of a 10 TPI set consisting of three thread measuring wires, measured in accordance with the specifications given in the B89.1.17 Standard. The measurements were made with a calibrated universal measuring machine having flat, parallel contacts with a maximum permissible scale error (MPE) of 20 μin. over a 0–6 in. range. The measurements were made in a room controlled to 20°C ± 0.5°C.

B2 SAMPLE UNCERTAINTY BUDGET FOR THE DIRECT MEASUREMENT OF WORKING SETS

As specified in the standard, the wires were measured over a 0.75-in. roll using a 40-oz force. The instrument was set to exert the correct force, and a 0.75-in. roll was placed between the anvils. The instrument was zeroed, and the 10 TPI wire was placed between the anvil at 90 deg to the 0.75-in. cylinder. This measurement was followed by another measurement of only the 0.75-in. roll to check for any thermal drift during the measurement process.

B2.1 Repeatability

In this example, 30 readings were taken to get a value for the repeatability of the measurement. The calculated one standard deviation of the 30 readings was 6 μin. The standard deviation of the mean of the 30 readings is $6/\sqrt{30}$, or 1.1 μin. In all subsquent measurements only one reading will be taken; therefore, the one standard deviation (6 μin.) is used in the uncertainty budget. Once the measurement uncertainty for a process has been determinned, it can then be used for all measurements made under similar conditions. Because this value was obtained by statistical means during the current measurement process, the value is listed as a Type A uncertainty. We list the standard deviation (6 μin.) under the standard uncertainty column. The standard uncertainty is the same as the standard deviation for a Type A uncertainty.

B2.2 Scale Error

We are not using any corrections from the calibration report for the scale. We only know the largest error is less than 20 μin. We assume this is a rectangular distribution, that is, the error is equally likely to be any value between 0 and 20. The Guide to the Expression of Uncertainty in Measurement tells us to divide by the square root of three to convert a rectangular distribution to one standard uncertainty. We list the standard uncertainty as 11.5 μin.

NOTE: In many cases, the scale error is a linear function increasing with the length. If the machine calibration had given a graph showing the errors at each position, the measurement could have been corrected for the machine error. The uncertainty due to the scale may have been less than we are using in this example.

B2.3 Error in Force Setting

The Appendix in the B1 standard that describes how to measure pitch diameter states the force should be within 10% of the specified value. We assume the instrument was properly calibrated and that the force was within 10% of the correct value when measuring the wires. We calculate the difference between the wire deformation at a 36-oz force and a 44-oz force using the Hertzian equations given in the Puttock and Thwaite document cited in para. 3. Again, we assume a rectangular distribution. We assume the force is equally likely to be any value between a 36-oz and a 44-oz force. We list 3.5 μin. in the standard uncertainty column.

Copyright ASME International
Provided by IHS under license with ASME
No reproduction or networking permitted without license from IHS
Not for Resale

TABLE B1 UNCERTAINTY BUDGET FOR THREAD WIRES (EXAMPLE 1)

Source of Uncertainty	Standard Uncertainty, u	u^2
Repeatability (A)	6	36
Scale error (B)	11.5	132
Force setting (B)	3.5	12
Uncertainty in coefficient (B)	0.04	0
Part/master temperature difference (B)	0.38	0.0
Parallelism of anvils (B)	0.38	0.1
Total Variance (U^2)	. . .	188
Combined standard uncertainty (u_c)	. . .	13.7
Expanded uncertainty, U, $k = 2$ for approximately 95 percent confidence level	. . .	27

GENERAL NOTE: All values in microinches.

B2.4 Errors Due to Temperature

The coefficient of thermal expansion of steel is approximately 11.5×10^{-6} per °C. If we assume the wires and the scale are the same temperature as the room, the change in diameter of the wire (Δw) would be the wire diameter (w) times the difference between the coefficients of thermal expansion of the scale ($\Delta\alpha$) and the wires, times the room deviation from the nominal 20°C (ΔT), or

$$\Delta w = w * \Delta\alpha * \Delta T$$

$$\Delta w = 0.057 \text{ in.} * 1.5 \times 1.0^{-6} \text{ °C}^{-1} * 0.5\text{°C} = 0.000\,000\,0.4 \text{ in.}$$

Even assuming the coefficients are not known any better than 10%, as long as the wires and measuring instrument are the same temperature, the correction is insignificant.

However, it is more reasonable to assume the temperature of the wires and the scale temperature differ by 1.0°C due to cleaning or from handling of the wires. A 1°C variation (Δt) would cause an error of 0.7 μin.

$$\Delta w = w * \Delta t * \alpha$$

or

$$\Delta w = 0.057 \text{ in.} * 1.0\text{°C} * 11.5 * 10^{-6} \text{ °C}^{-1} = 0.000\,000\,7 \text{ in.}$$

If we assume a rectangular distribution, we get 0.4 μin. for the standard uncertainty that we list in Table B1.

B2.5 Parallelism of Anvils

The out-of-parallelism of the anvils can cause an error when reading the large roll that will not be compensated when measuring with two rolls 90 deg apart. A reasonable estimate of the out-of-parallelism is 5 μin. Again assuming a rectangular distribution, we have a standard uncertainty of 2.9 μin.

B2.6 Summary

When measuring the pitch diameter of a thread, an uncertainty of 27 μin. in the wire diameter will cause an uncertainty of 81 μin. due only to the uncertainty of the wire measurement. In many cases, this will not be adequate and a more accurate method of measuring the wires must be employed.

By looking at the u^2 (variance) column we can see that the dominant uncertainty in the budget is the one caused by the machine scale. We can reduce our uncertainty by using an instrument with a lower scale error. We could also reduce the uncertainty by using the error curve from the calibration of the measuring machine.

We could also have reduced the uncertainty by measuring the wires by comparison to master wires that have been measured in accordance with the specification in the standard.

B3 INTRODUCTION

In this example, we will develop an uncertainty budget to calculate the uncertainty of the measured value of a 10 TPI master thread measuring wire, measured in accordance with the specifications given in the B89.1.17 Standard. The measurements were made in a room controlled to 20°C ± 0.5°C.

Copyright ASME International
Provided by IHS under license with ASME
No reproduction or networking permitted without license from IHS
Not for Resale

TABLE B2 UNCERTAINTY BUDGET FOR THREAD WIRES (EXAMPLE 2)

Source of Uncertainty	Standard Uncertainty, u	u^2
Master	1.5	2.25
Reproducibility (A)	1.21	1.46
Scale error (B)	0.46	0.21
Force setting (B)	0	0
Uncertainty in coefficient (B)	0.04	0
Part/master temperature difference (B)	0.38	0.1
Parallelism of anvils (B)	0.57	0.3
Total Variance (U^2)	. . .	4.18
Combined standard uncertainty (u_c)	. . .	2.04
Expanded uncertainty, U, $k = 2$ for approximately 95 percent confidence level	. . .	4.1

GENERAL NOTE: All values in microinches.

B4 SAMPLE UNCERTAINTY BUDGET FOR THE COMPARISON OF A MASTER THREAD MEASURING WIRE

The measurements were made on a comparator with flat parallel contacts and an indicator with a 2-μin. resolution. The force used was 4 oz.

B4.1 Master

The wire was compared to a master wire measured by a laboratory giving ± 3 μin. as the expanded uncertainty. Dividing by two gives us a one standard uncertainty of 1.5 μin.

B4.2 Reproducibility

In this example, 30 readings were taken by three operators to get a value for the reproducibility of the measurements. The calculated standard deviation of the 30 readings was 1.21 μin. Because this value was obtained by statistical means during the measurement process, the value is listed as a Type A uncertainty. The 1.21 μin. was one standard deviation. We list it as 1.2 under the standard uncertainty column. The standard uncertainty is the same as the standard deviation in this instance.

B4.3 Scale Error

The scale had been calibrated, and the report showed that the worst error did exceed two percent of the reading over the total range of the scale. The maximum difference between the master and the test to be expected is 40 μin. The worst-case error to be expected is two percent of the reading or 0.8 μin. However, the readings may be anywhere within the 40 μin. range, so we assume a rectangular distribution, and divide by the square root of three to get a one standard uncertainty of 0.46 μin.

B4.4 Error in Force Setting

Because we are comparing like things, there is no uncertainty due to the force setting.

B4.5 Errors Due to Temperature

The coefficient of thermal expansion of steel is approximately 11.5×10^{-6} per °C. If we assume the wires and the scale are the same temperature as the room, the change in diameter of the wire (Δw) would be the wire diameter (w) times the difference between the coefficients of thermal expansion of the scale ($\Delta\alpha$) and the wires, times the room deviation from the nominal 20°C (ΔT), or

$$\Delta w = w * \Delta\alpha * \Delta T$$

$$\Delta w = 0.057 \text{ in.} * 1.5 * 10^{-6}\ ^\circ\text{C}^{-1} * 0.5^\circ\text{C}$$
$$= 0.000\ 000\ 0.4 \text{ in.}$$

However, it is more reasonable to assume the master wire may differ from the test wire by one degree. A one-degree variation would cause an error of 0.6 μin.

$$\Delta w = w * \Delta t * \alpha$$

or

$$\Delta w = 0.057 \text{ in.} * 11.5 * 10^{-6}\ ^\circ\text{C}^{-1} 1.0^\circ\text{C}$$
$$= 0.000\ 000\ 65 \text{ in.}$$

Copyright ASME International
Provided by IHS under license with ASME
No reproduction or networking permitted without license from IHS Not for Resale

If we again assume a rectangular distribution we get 0.38 μin. for the standard uncertainty that we list in Table B2.

B4.6 Parallelism of Anvils

The out-of-parallelism of the anvils can cause an error if the master wire and test wire are placed in different positions. If some means is used to support the wires, this effect is minimized. If a support is not used, most of the error caused by placing the wires in different positions will show as part of the reproducibility. For very small wires, which may be bent, it is possible to get a large error in the comparison if the anvils are not parallel. In our case, errors due to parallelism were estimated not to exceed 1 μin. Again assuming a rectangular distribution, we have a standard uncertainty of 0.57 μin.

B4.7 Summary

By looking at the u^2 (variance) column we can see that the dominant uncertainty in the budget is the one caused by the uncertainty in the masters. We can reduce our uncertainty significantly only by having lower uncertainties for the master wires.

Copyright ASME International
Provided by IHS under license with ASME
No reproduction or networking permitted without license from IHS
Not for Resale

AMERICAN NATIONAL STANDARDS FOR DIMENSIONAL METROLOGY AND CALIBRATION OF INSTRUMENTS

Technical Paper 1990, Space Plate Test Recommendations for Coordinate Measuring Machines B89
Technical Report 1990, Parametric Calibration of Coordinate Measuring Machines B89
Calibration of Gage Blocks by Contact Comparison Methods (Through 20 in. and 500 mm) B89.1.2M-1991
Measurement of Plain External Diameters for Use as Master Discs or Cylindrical Plug Gages B89.1.5-1998
Measurement of Qualified Plain Internal Diameters for Use as Master Rings and Ring Gages ..... B89.1.6M-1984(R1997)
Precision Gage Blocks for Length Measurement (Through 20 in. and 500 mm) ..... B89.1.9M-1984(R1997)
Dial Indicators (for Linear Measurements) ..... B89.1.10M-1987(R1995)
Measurement of Thread Measuring Wires B89.1.17-2001
Measurement of Out-of-Roundness ..... B89.3.1-1972(R1997)
Axes of Rotation — Methods for Specifying and Testing ..... B89.3.4M-1985(R1992)
Methods for Performance Evaluation of Coordinate Measuring Machines B89.4.1-1997
Temperature and Humidity Environment for Dimensional Measurement ..... B89.6.2-1973(R1995)
Dimensional Measurement Planning B89.7.2-1999
Guidelines for Decision Rules: Considering Measurement Uncertainty in Determining Conformance to Specifications B89.7.3.1-2001

The ASME Publications Catalog shows a complete list of all the Standards published by the Society. For a complimentary catalog, or the latest information about our publications, call 1-800-THE-ASME (1-800-843-2763).

Copyright ASME International
Provided by IHS under license with ASME
No reproduction or networking permitted without license from IHS
Not for Resale

ASME Services

ASME is committed to developing and delivering technical information. At ASME's Information Central, we make every effort to answer your questions and expedite your orders. Our representatives are ready to assist you in the following areas:

ASME Press
Codes & Standards
Credit Card Orders
IMechE Publications
Meetings & Conferences
Member Dues Status
Member Services & Benefits
Other ASME Programs
Payment Inquiries
Professional Development
Short Courses
Publications
Public Information
Self-Study Courses
Shipping Information
Subscriptions/Journals/Magazines
Symposia Volumes
Technical Papers

How can you reach us? It's easier than ever!

There are four options for making inquiries* or placing orders. Simply mail, phone, fax, or E-mail us and an Information Central representative will handle your request.

Mail
ASME
22 Law Drive, Box 2900
Fairfield, New Jersey
07007-2900

Call Toll Free
US & Canada: 800-THE-ASME
(800-843-2763)
Mexico: 95-800-THE-ASME
(95-800-843-2763)
Universal: 973-882-1167

Fax—24 hours
973-882-1717
973-882-5155

E-Mail—24 hours
Infocentral@asme.org

* Information Central staff are not permitted to answer inquiries about the technical content of this code or standard. Information as to whether or not technical inquiries are issued to this code or standard is shown on the copyright page. All technical inquiries must be submitted in writing to the staff secretary. Additional procedures for inquiries may be listed within.

Copyright ASME International
Provided by IHS under license with ASME
No reproduction or networking permitted without license from IHS
Not for Resale

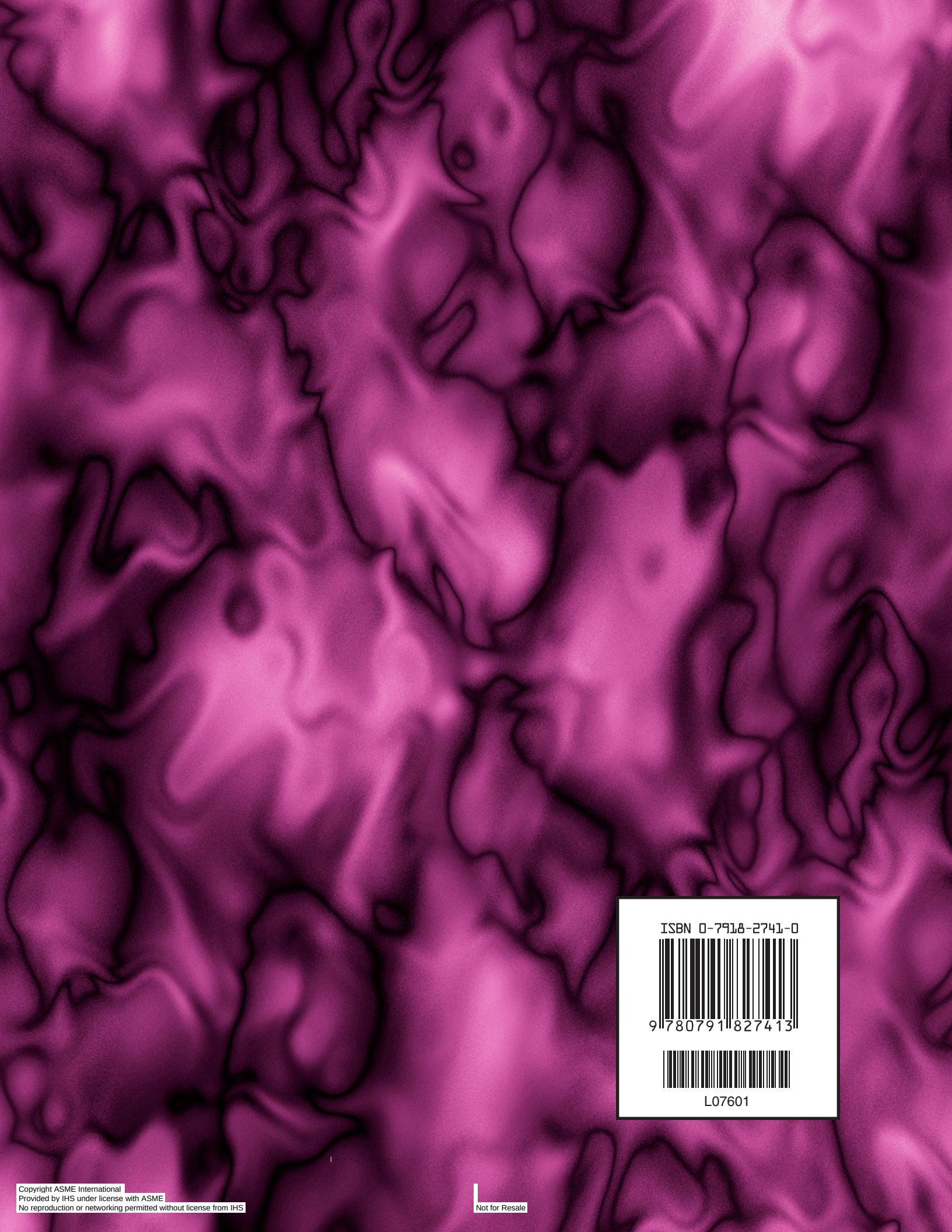

ISBN 0-7918-2741-0

9 780791 827413

L07601

Copyright ASME International
Provided by IHS under license with ASME
No reproduction or networking permitted without license from IHS

Not for Resale