Errata
to
ASME B89 Technical Report 1990
Parametric Calibration of Coordinate Measuring Machines

On page 1, in third paragraph of para. 2.2, fourth line, *Efforts* revised to read *Errors.*

On page 1, arrowheads added to Fig. 1. Revisions appear on the overleaf.

On page 3, title of para. 5.0 revised to read *Squareness Measurement.*

On page 3, in last line of para. 5.1, *diagonal square* revised to read *ball bar.*

On page 4, in Setup 1 of Fig. 3, left line representing straightedge revised to be continuous across the probe. Revision appears on the overleaf.

On page 11, in third paragraph of para. 8.3, third line, *measurements and angle* revised to read *measurements, an angle.*

THE AMERICAN SOCIETY OF MECHANICAL ENGINEERS
Three Park Avenue, New York, NY 10016-5990
March 2002

L0070E

Copyright ASME International
Provided by IHS under license with ASME
No reproduction or networking permitted without license from IHS

Not for Resale

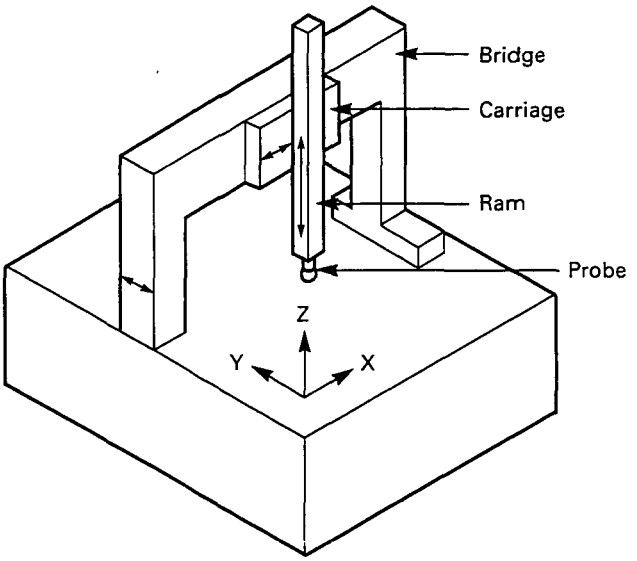

FIG. 1

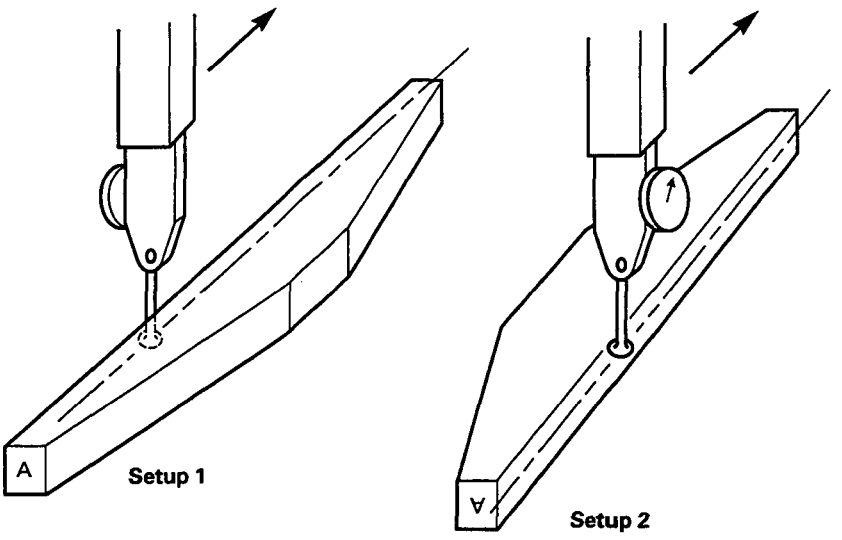

FIG. 3

Copyright ASME International
Provided by IHS under license with ASME
No reproduction or networking permitted without license from IHS
Not for Resale

ASME B89 TECH*REPT 90 ■ 0759670 0081891 0 ■

ASME B89
TECHNICAL REPORT 1990

Parametric Calibration of Coordinate Measuring Machines

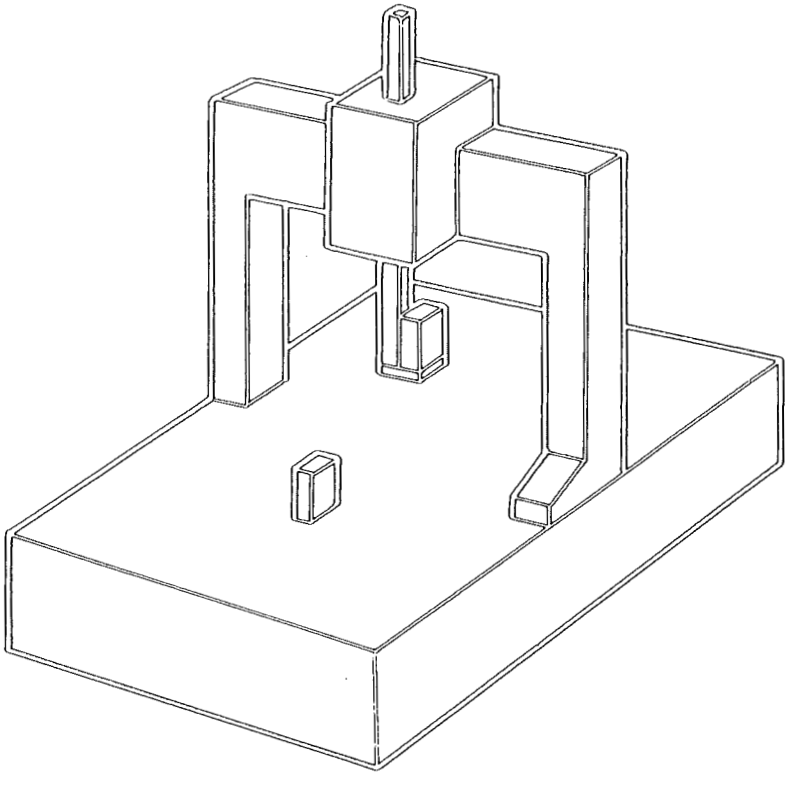

AN ASME TECHNICAL REPORT

The American Society of Mechanical Engineers

Copyright ASME International
Provided by IHS under license with ASME
No reproduction or networking permitted without license from IHS

Not for Resale

ASME B89 TECH*REPT 90 0759670 0081892 2

ASME B89 TECHNICAL REPORT

Parametric Calibration of Coordinate Measuring Machines

The American Society of Mechanical Engineers

345 East 47th Street, New York, N.Y. 10017

Copyright ASME International
Provided by IHS under license with ASME
No reproduction or networking permitted without license from IHS

Not for Resale

Date of Issuance: February 6, 1991

No part of this document may be reproduced in any form,
in an electronic retrieval system or otherwise,
without prior written permission of the publisher.

Copyright © 1991 by
THE AMERICAN SOCIETY OF MECHANICAL ENGINEERS
All Rights Reserved
Printed in U.S.A.

Copyright ASME International
Provided by IHS under license with ASME
No reproduction or networking permitted without license from IHS

Not for Resale

FOREWORD

This Technical Report was written by Task Force L — Parametrics, ASME Working Group B89.1.12, Coordinate Measuring Machines.

Methods for Performance Evaluation of Coordinate Measuring Machines, ANSI/ASME B89.1.12M-1985, recognizes that more-complex methods than those of the Standard may be appropriate for some applications. The intent of this paper is to provide guidance to specification writers in those cases where the appropriate more-complex method is the method of parametric calibration. Since parametric calibration does not assess the effects of machine dynamics and probing, it should be considered a supplement to B89.1.12 tests rather than a replacement.

There are two types of appropriate applications for parametric calibration. The first includes cases where methods of the B89.1.12 Standard do not give reasonable assurance machine geometry is correct. An example is the case where a short ball bar must be used to test a machine with one long axis. The second includes cases where there is a need to know details of machine geometry. An example is a system where the machine is used to position a photo array camera. Machines in a third category, those with parametric error correction, may generally be tested by methods of the Standard, and are outside the scope of this report. In many cases a partial parametric calibration may be appropriate.

Parametric calibration of a machine is measurement of its parametric errors. These are differences between actual and nominal positions of machine movable components. In the system of this paper, for each position of a three-axis machine there are twenty-one parametric errors. They may be mathematically combined to find the three axial components of probe tip position error. Probe tip position error is one of several determinants of performance as measured, for example, in the B89.1.12 linear displacement accuracy and ball bar performance tests.

The report is organized into several sections. The first is the scope. The second, dealing with machine geometry, defines parametric errors in terms of an idealized example. The following five sections deal with measurements from which parametric errors can be calculated. The next section deals in a general way with processing the measured data to determine the parametric errors. The final two sections deal with terminology and references for further study. No attempt is made to be exhaustive. The intent, rather, is to pin down general principles, and to give the flavor of the work involved in a calibration.

Copyright ASME International
Provided by IHS under license with ASME
No reproduction or networking permitted without license from IHS
Not for Resale

ASME B89 COMMITTEE
Dimensional Metrology

(The following is the roster of the Committee at the time of approval of this Technical Report.)

OFFICERS

B. R. Taylor, *Chairman*
F. G. Parsons, *Vice Chairman*
P. D. Stumpf, *Secretary*

COMMITTEE PERSONNEL

A. M. Bratkovich
J. B. Bryan
A. K. Chitayat
J. B. Deam, *Alternate*
W. E. Drews
C. G. Erickson
M. F. A. Fadl
R. D. Farley
M. B. Grant
R. B. Hook
C. W. Jatho, *Alternate*
F. L. Jones
A. A. Lindberg
E. G. Loewen
T. Mukaihata
D. Pieczulewski
L. K. Reddig
E. L. Watelet
W. A. Watts
J. H. Worthen
R. B. Zipin

PERSONNEL OF TASK FORCE L — PARAMETRICS

W. L. Beckwith, *Chairman*
J. B. Bryan
R. P. Callaghan
T. Charlton
B. R. Taylor

Copyright ASME International
Provided by IHS under license with ASME
No reproduction or networking permitted without license from IHS
Not for Resale

PERSONNEL OF WORKING GROUP 1.12 – COORDINATE MEASUREMENT MACHINES (SC1/B89)

R. B. Hook, *Chairman*
W. L. Beckwith, Jr., *Secretary*
M. E. Algeo
M. Anderson
J. M. Baldwin
L. Best
H. Bostrom
J. B. Bryan
G. Burkett
R. P. Callaghan, Jr.
A. Campion
E. C. M. Caranfa
T. Charlton, Jr.
R. T. Clark
A. C. Corbett
Y. Coue
D. J. Deer
J. Deis
R. Donaldson
W. E. Drews
D. T. Durboraw
B. Edwards
J. Everhart
F. Farzan
R. M. Fletcher
M. T. Gale
W. S. Gehner
B. A. Graham
D. M. Granrose
M. B. Grant
A. J. Griggs
D. He
G. P. Hegarty
E. Helmel
J. L. Henry
J. R. Hicks
R. J. Hocken
T. H. Hopp
R. W. Horning
J. Hurt
W. P. Kilpatrick
E. M. Kloc, Jr.
J. S. Lifson
E. G. Loewen
L. Maggiano
M. L. Majlak
W. McLendon
D. R. McMurtry
R. C. Meek
F. M. Mills
K. E. Moser
D. M. Moyer
R. C. Newton
G. Nilsson
J. T. Nilsson
J. P. Olson
R. A. Olson
D. Ott
R. Parrillo
D. R. Porter
T. Posterick
W. Randles
W. H. Rasnick
R. M. Roterdam, Jr.
S. Roufeh
R. Shelton
W. G. Slavik
C. Stange
W. J. Stegmuller
J. Stroili
B. R. Taylor
W. B. Taylor
D. W. Thomas
A. Traylor
K. Ulbrich
R. C. Veale
R. K. Walker
R. W. Waller
D. A. Wright

Copyright ASME International
Provided by IHS under license with ASME
No reproduction or networking permitted without license from IHS
Not for Resale

CONTENTS

Foreword iii
Standards Committee Roster v

1.0 Scope 1

2.0 Machine Geometry 1
2.1 General 1
2.2 Motion, Single Movable Component 1
2.3 Relationship Between Components 2

3.0 Positioning Error Measurements 2
3.1 General 2

4.0 Straightness Error Measurement 2
4.1 General 2
4.2 Mechanical Straightedge 2
4.3 Taut Wire 3
4.4 Alignment Laser 3
4.5 Laser Straightness Interferometer 3

5.0 Squareness Measurement 3
5.1 General 3
5.2 Mechanical Square 3
5.3 Optical Square 7
5.4 Ball Bar 7

6.0 Yaw and Pitch Measurement 7
6.1 General 7
6.2 Electrical Levels 7
6.3 Autocollimator 7
6.4 Laser Angular Interferometer 7
6.5 Positioning Error Instrumentation 7

7.0 Roll Measurement 9
7.1 General 9
7.2 Electronic Levels 9
7.3 Straightness Instrumentation 9

8.0 Processing the Measured Data 9
8.1 Axes 9
8.2 Measurement Lines 11
8.3 Squareness 11
8.4 Roll 11

9.0 Terminology 13
9.1 General 13
9.2 Glossary 13

10.0 References for Further Study 14

Copyright ASME International
Provided by IHS under license with ASME
No reproduction or networking permitted without license from IHS
Not for Resale

B89 REPORT

PARAMETRIC CALIBRATION OF COORDINATE MEASURING MACHINES

1.0 SCOPE

This report deals with coordinate measuring machines having three linear axes perpendicular to each other. Such machines have three movable components. An example is the moving-bridge machine, Fig. 1. The movable components are the bridge, carriage, and ram.

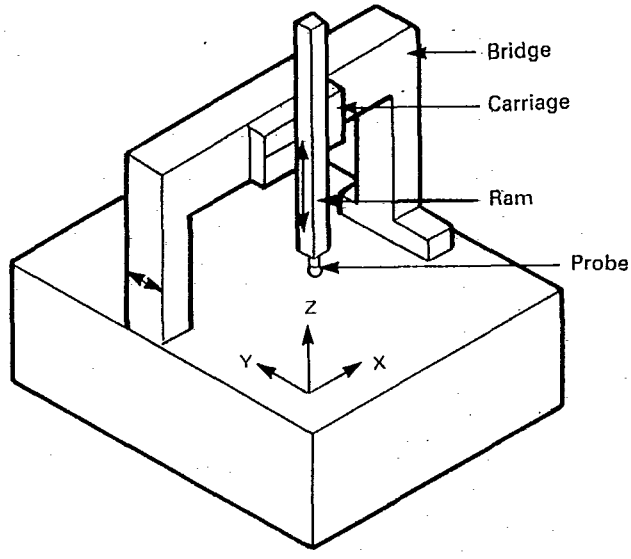

FIG. 1

2.0 MACHINE GEOMETRY

2.1 General

Discussion is in two steps. The first covers motion of a single movable component such as the carriage. The second covers relationship between motions of the three components.

2.2 Motion, Single Movable Component

The carriage of a moving-bridge machine is shown in Fig. 2. The carriage is designed to move in the X direction along a guideway on the bridge. It is assumed variations in forces acting on the carriage do not change its shape.

The machine has an X scale which measures motion of the carriage in the X direction relative to the bridge.

Let motion of the bridge and ram along their guideways be prevented by means which do not distort the X guideway. Let the carriage be moved along the X guideway. Efforts in the actual motion are shown in Fig. 2. There are three rotational errors about the machine axes: yaw, pitch, and roll. Since the carriage does not change shape as it moves, these errors are the same for all parts of the carriage. There are also three translational errors. Horizontal and vertical straightness are deviations from straight line motion. Positioning error is X scale reading minus actual travel of the carriage from the position of zero scale reading. Unless the three rotational errors are zero, the three translational errors depend on the

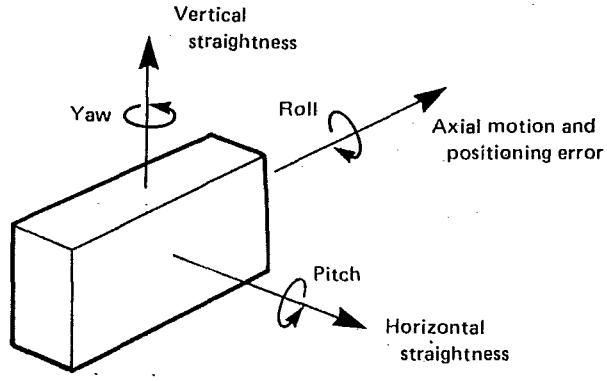

FIG. 2

Copyright ASME International
Provided by IHS under license with ASME
No reproduction or networking permitted without license from IHS
Not for Resale

point on the carriage at which they are measured. The six X-dependant errors, three rotational and three translational, form a set of six X parametric errors. There are sets of Y and Z parametric errors determined in the same manner and having the same characteristics.

To cope with the dependance of translational errors on the point at which they are measured, the calibration system of this paper makes use of a probe reference point and a machine axis system. The probe reference point is fixed to the ram in a defined, identifiable position. The origin of the machine axis system is fixed to the table in a defined, identifiable position. The machine axes are generally parallel to the machine guideways.

It is usually assumed, as in this report, that parametric errors for an axis depend only on position along that axis. This is only approximately true. For example in the moving bridge machine of Fig. 1, loads on the left and right bridge legs, and on the Y guideways, depend on X location of the carriage. Deflections of the guideways depend both on load and Y position. Thus Y parametric errors are functions of both X and Y. Position of the Y axis should be chosen so that Y parametric errors, determined as functions at Y only, are the most meaningful.

Exact definitions of parametric errors according to the system of this report are best illustrated by means of an idealized example.

Steps in measuring yaw, pitch, and roll are the same. The probe reference point is placed at the machine origin. Motions of the Y and Z movable components are prevented by means which do not distort the X guideway. Gaging is set up to measure angular motion of the ram relative to the table. Gage readout is zeroed. The machine is moved to predetermined X positions, and X scale gage readings are recorded. The recorded gage reading for a position is the parametric error for that position. Y and Z yaw, pitch, and roll are measured in a similar manner.

For determination of X horizontal or vertical straightness, the probe reference point is placed at the origin, and Y and Z motions are prevented, as for X angular errors. A reference straightedge (mechanical, optical, etc.) is mounted to the table with its reference line approximately along the X axis. A gaging device is mounted on the ram at the probe reference point to read against the straightedge. The machine is moved to predetermined X positions, and X scale and gage readings are recorded. A root-mean-square best fit line through the measured data is calculated. For each X position, straightness is recorded gage reading minus corresponding coordinate of the best-fit line. Y and Z straightness are determined in a similar manner.

For determination of X positioning error, the probe reference point is placed at the origin, and Y and Z motions are prevented, as for X angular errors. Gaging is set up to measure X travel of the ram relative to the table. The machine is moved to predetermined X positions. X scale and gage readings are recorded. For any X position, X travel error is scale reading minus gage reading. Y and Z positioning error are determined in the same manner.

2.3 Relationship Between Components

Relationships between component motions are described by three parametric errors known as squarenesses. XY squareness is angle between X and Y best-fit lines, as viewed in the Z direction, minus a right angle. XZ squareness is a similar relationship between X and Z best-fit lines. YZ squareness is a similar relationship between Y and Z best-fit lines.

3.0 POSITIONING ERROR MEASUREMENT

3.1 General

Common gages for measuring positioning errors are the step gage, laser interferometer, and line scale. Proper use of the step gage and laser interferometer are discussed in the B89.1.12 Standard, Section 5.1. Use of a precision line scale and microscope is limited to low-accuracy machines.

4.0 STRAIGHTNESS MEASUREMENTS

4.1 General

Common methods of straightness measurements make use of the mechanical straightedge, taut wire, alignment laser, and laser interferometer.

4.2 Mechanical Straightedge

Mechanical straightedges are usually used only for small machines. The straightedge is approximately aligned parallel to an axis guideway and measured with a mechanical or electronic indicator. Measurements may be corrected by means of straightedge calibration, but since calibrations are always suspect, a better method is to reverse the straightedge. This is done by rotating the straightedge 180 deg. about

Copyright ASME International
Provided by IHS under license with ASME
No reproduction or networking permitted without license from IHS
Not for Resale

its long axis and re-measuring. If corresponding values of the two sets of readings are suitably averaged, straightedge errors cancel out. Typical setups are shown in Fig. 3. Whatever setups are used should be carefully analyzed to determine the correct method of averaging. For example in Fig. 3, a positive gage reading in Setup 1 corresponds to a positive straightness error. In Setup 2 where the straightedge and gage head are reversed, a negative gage reading corresponds with a positive error. Therefore the method of averaging is to subtract measurement of Setup 2 from corresponding measurement of Setup 1, and divide the results by 2.

For larger machines the straightedge must be staged. The dilemma with staging is that a large overlap of gage positions tends to improve relative gage alignments, but more gage positions are required. It is very difficult to make valid measurements on a large machine.

4.3 Taut Wire

Taut wire measurements, shown in Fig. 4, are often used for large machines. The wire is stretched along an axis-direction line, and measurements are made with a microscope mounted to the ram. Vertical straightness measurements for a horizontal axis are usually impractical because of the difficulty of making an accurate catenary correction.

4.4 Alignment Laser

The alignment laser, shown in Fig. 5, uses the center of a laser beam as the straightness reference line. The laser is mounted on the machine table. Lateral deviation of the ram from the laser beam center is sensed by a quadrant or lateral effect sensor on the ram. A light filter at the sensor may be needed to reduce the effect of ambient light. Since the laser beam tends to wander somewhat due to mechanical distortions, instabilities in the laser cavity and air currents, better devices of this type average readings over a period of time for each measurement point. In some cases a fan is used to eliminate systematic errors due to thermal gradients in the air.

4.5 Laser Straightness Interferometer

One form of laser interferometer for straightness measurement, shown in Fig. 6, uses a Wollaston prism on the ram to split the laser beam into two diverging parts. These are reflected from the two mirrors of a straightness reflector which is mounted on the machine table. The mirrors are set square with the split parts of the laser beam, and reflect back on themselves. Changes in the interference pattern of the reflected beam parts indicate changes in relative lengths of the beam parts. These are proportional to changes in transverse position of the Wollaston prism on the ram relative to the straightness reflector on the table. Varients of the system use other means of splitting the beam, and mirrors or prisms to obtain divergence. It is important to keep in mind that the straightness reference line is the bisector of the mirror angle, not the laser beam. For long axes instabilities and systematic gradients reduce accuracy. Again the remedy is a fan, and averaging readings over a period of time.

A second form of straightness interferometer, shown in Fig. 7, uses a long mirror as a straightness reference line. The mirror is mounted on the table, generally parallel to the axis to be measured. The interferometer, which is mounted on the ram, measures distance from the ram to the mirror. Since distance from the interferometer to the mirror is small, variations in air condition have only secondary effects on measurements. The mirror must be rigid and straight. Mirror errors may be eliminated by the reversal method described for the mechanical straightedge. For long axes the mirror must be staged.

5.0 STRAIGHTNESS MEASUREMENT

5.1 General

Three common methods of measuring squareness are based on the mechanical square, optical square, and diagonal square.

5.2 Mechanical Square

The mechanical square is placed in an axial plane with its legs approximately aligned with two axial directions. For example, Fig. 8 shows the setup for XY squareness measurements. Four measurements are required, two against each leg of the square.

Accurate determination of squareness with a mechanical square is often difficult. Known problems are that it is difficult to determine if the square is accurately in an axial plane, that legs of the square deteriorate with use, that square calibration data can be incorrectly applied, and that the calibration line along each leg is usually not identified.

Copyright ASME International
Provided by IHS under license with ASME
No reproduction or networking permitted without license from IHS
Not for Resale

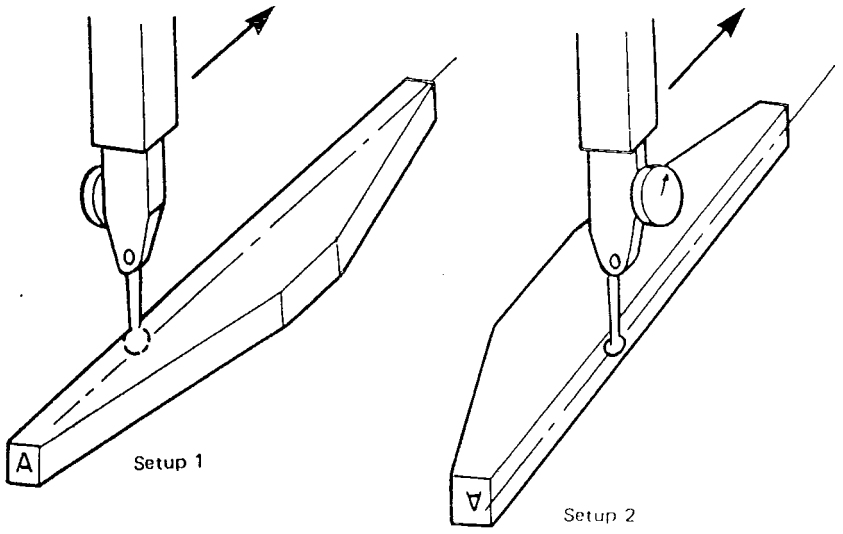

FIG. 3

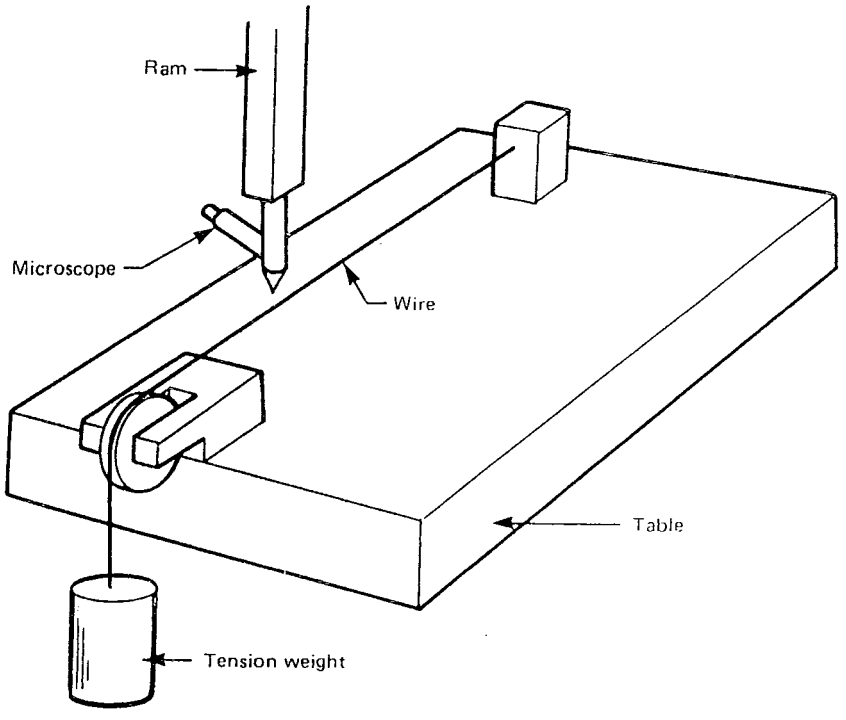

FIG. 4

Copyright ASME International
Provided by IHS under license with ASME
No reproduction or networking permitted without license from IHS
Not for Resale

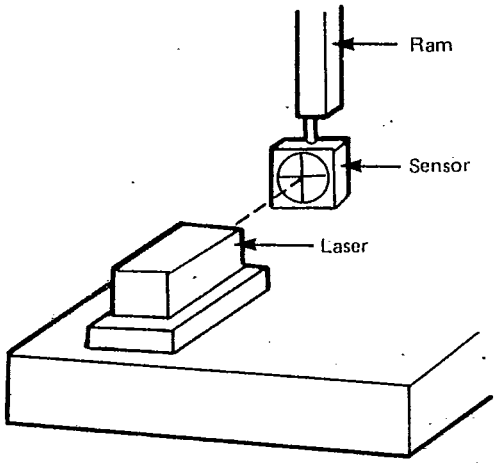

FIG. 5

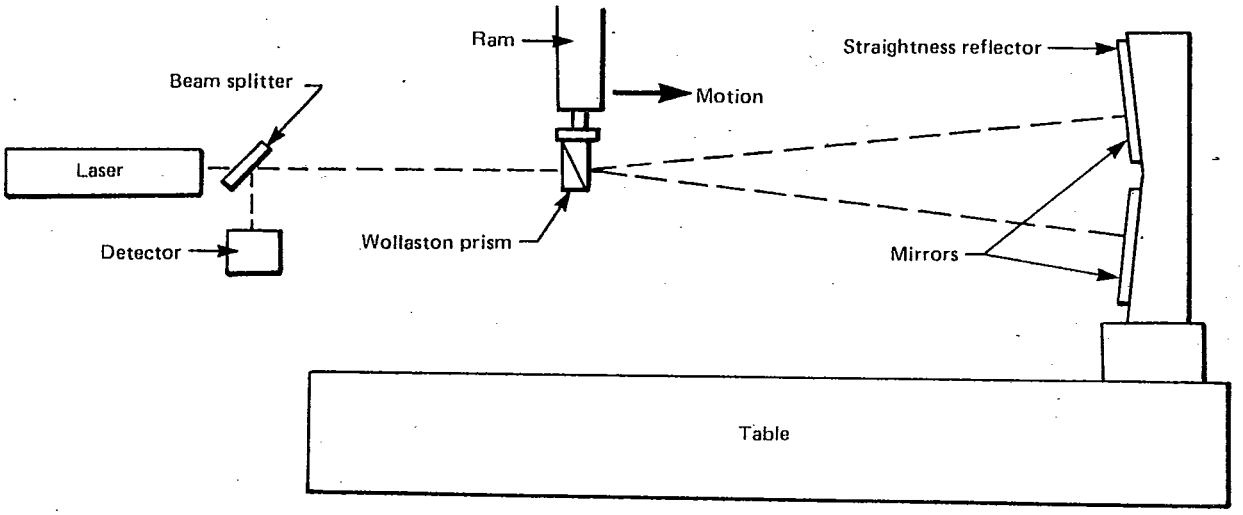

FIG. 6

Copyright ASME International
Provided by IHS under license with ASME
No reproduction or networking permitted without license from IHS
Not for Resale

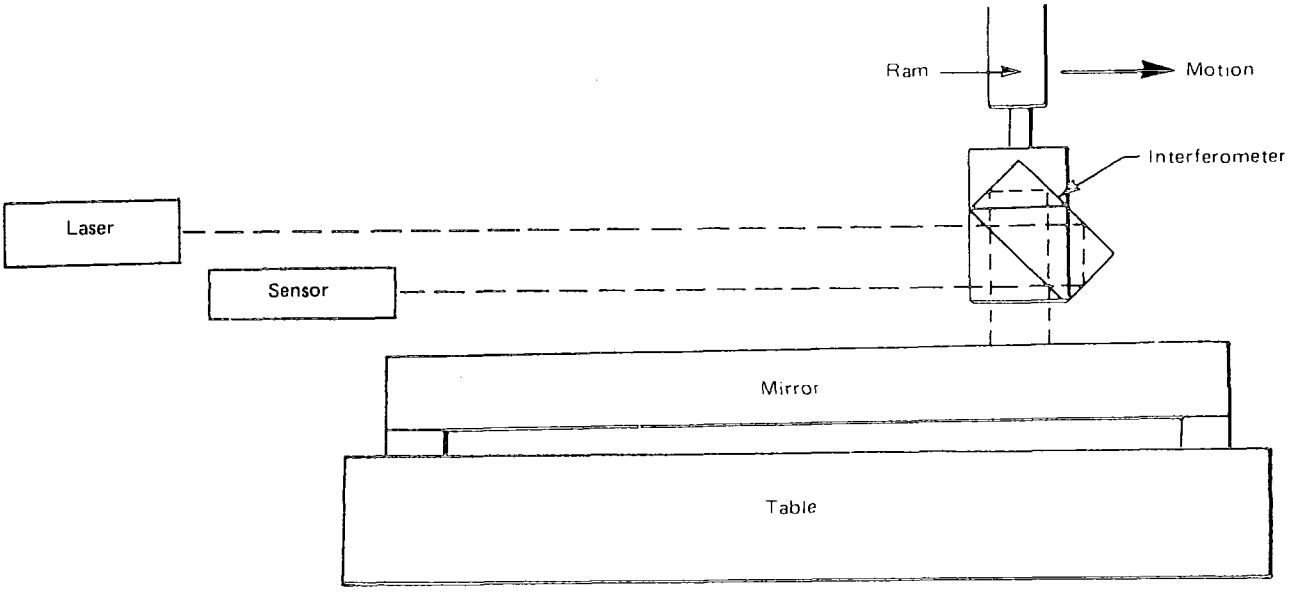

FIG. 7

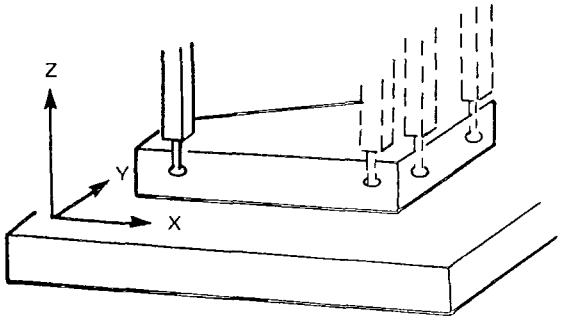

FIG. 8

Copyright ASME International
Provided by IHS under license with ASME
No reproduction or networking permitted without license from IHS
Not for Resale

5.3 Optical Square

An optical square used with an alignment laser is shown in Fig. 9. Two types of squares are in general use: the mirror square shown in the figure, and the penta prism. The mirror square has lower light losses, while the penta prism is more damage-resistant. When properly set up, the incoming beam to the square is perpendicular to the outgoing beam. Machine squareness is determined from two sets of straightness measurements (horizontal in the figure), one relative to the incoming beam and one to the outgoing. Neither the square nor the laser may be moved between the two measurement sets.

The optical square must be used with caution. It is a plane device, and must be fixtured to lie accurately in the plane of the incoming and outgoing beams. If this is not done, the beams will not be at right angles.

The optical square may also be used with the Wollaston prism straightness interferometer. Here the lines which determine the plane in which the square must be mounted are the bisector of the reflector angle and its reflection from the optical square. The setup for XY squareness is shown in Fig. 10.

5.4 Ball Bar

A squareness device which gives excellent results in practice is the ball bar. The bar is placed successively in two positions in an axial plane as shown in Fig. 11, and is measured in each position. Each position is at 45 deg. to the axes, and one position is perpendicular to the other. The center of the bar is at the same location for both measurements. Only nominal accuracy is required for the setups. Difference between measured lengths is an indication of squareness. A gage block or distance-measuring laser interferometer may be used in place of the ball bar.

6.0 YAW AND PITCH MEASUREMENT

6.1 General

Common methods for measuring yaw and pitch are directly by means of levels, autocollimator or laser interferometer, and indirectly by means of linear displacement measurements.

6.2 Electronic Levels

Differential electronic levels provide a fast, effective means of measuring pitch for all axes, and yaw for vertical axes. As shown in Fig. 12, a reference level is placed on the table and a measuring level on the ram. The readout device is set up to display difference between readings of the two levels. The reference level is necessary, even for fixed-table machines, because most machines rock somewhat due to center of gravity changes.

Some cautions are necessary. Care must be taken that weights of the levels do not cause deflections which significantly affect results. An interesting problem occurs with machines having relatively large rocking motions, for example machines on vibration mounts. For such cases differences between errors in the two levels may be significant compared with the yaws and pitches being measured. The levels may be checked by placing them side-by-side on the machine table and moving the machine components. If difference readings are significant, two runs may be made for each yaw or pitch with the levels interchanged between runs, and the two measurements for each position averaged.

6.3 Autocollimator

The autocollimator may be used for all yaw and pitch measurements. A quality instrument with an accurately-flat mirror is required. For large machines there are likely to be problems with air thermal gradients. These should be handled by means of fans and averaging, as with laser straightness measurements.

6.4 Laser Angular Interferometer

The angular laser interferometer can also measure all yaws and pitches. A typical setup is shown in Fig. 13. The beam from a laser is divided into two parallel beams by means of an interferometer on the table. The parallel beams are returned by two retroreflectors on the ram. Changes in the interference pattern of the two returned beams is an indicator of differences between their pathlengths. Change of pathlength difference divided by distance between the paths is change of yaw or pitch (radians).

In some systems the interferometer is made up of a beam splitter and a mirror which must be assembled by the user. In such cases the procedure recommended by the laser system manufacturer must be followed to ensure the beams are parallel.

6.5 Positioning Error Instrumentation

Yaw or pitch may be determined from measurements of positioning errors of two points on a mov-

Copyright ASME International
Provided by IHS under license with ASME
No reproduction or networking permitted without license from IHS
Not for Resale

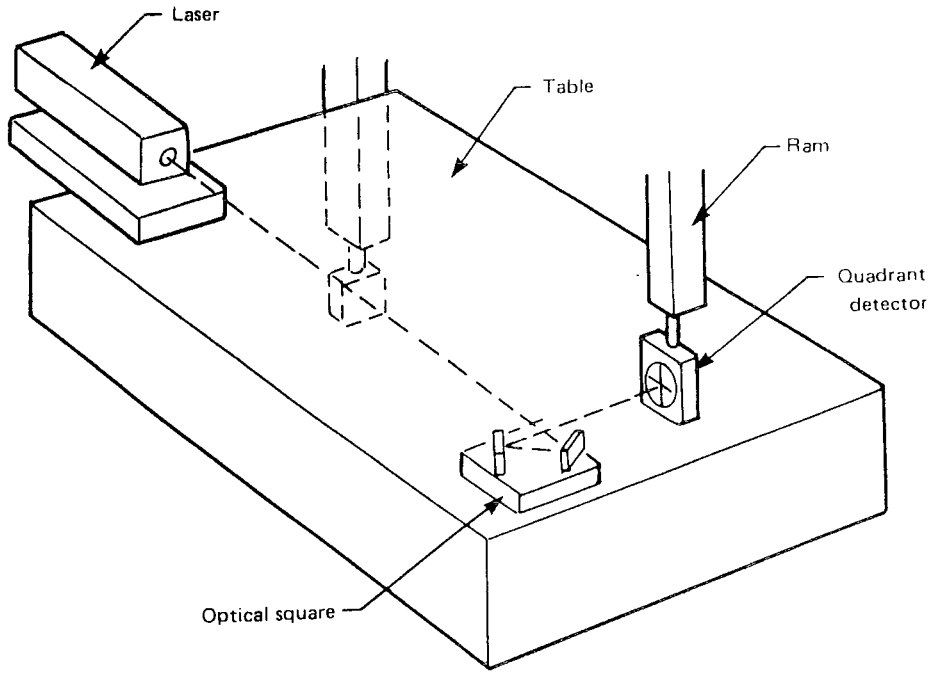

FIG. 9

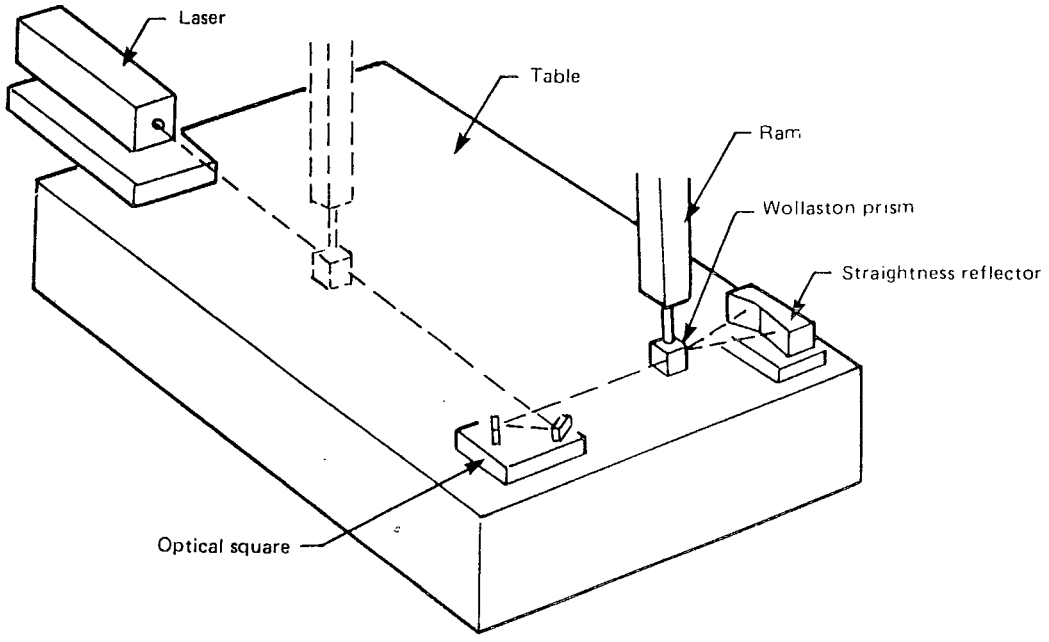

FIG. 10

Copyright ASME International
Provided by IHS under license with ASME
No reproduction or networking permitted without license from IHS
Not for Resale

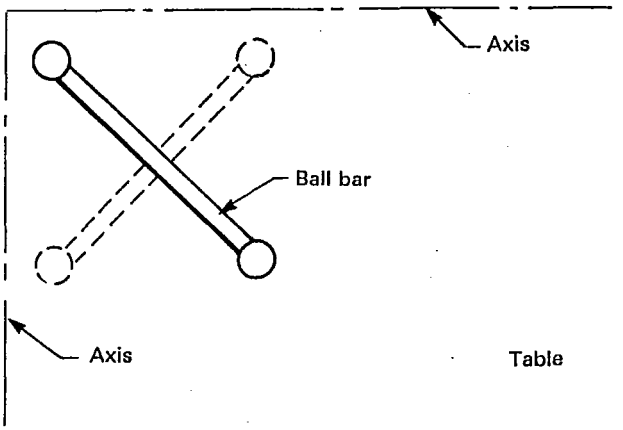

FIG. 11

able component. Yaw or pitch is difference between the two positioning errors divided by a component of distance between the two points, normal to the direction of measurement and in the plane of the yaw or pitch. An advantage of the method is that accuracy can be improved by using a long baseline. A disadvantage is that changes of machine geometry between the times of the measurements, and differences in conditions along the measuring paths, can cause errors.

7.0 ROLL MEASUREMENT

7.1 General

Roll is commonly measured by means of precision levels or parallel straightness measurements.

7.2 Electronic Levels

Precision levels may be used to measure roll of a horizontal axis. Methods closely follow those for yaw and pitch.

7.3 Straightness Instrumentation

Rolls for vertical axes, and optionally for horizontal, are determined from two parallel sets of straightness measurements. The principle is illustrated in Fig. 14 which shows the setup for measuring roll of a vertical axis by means of a mechanical square and an indicator. The method may be modified to use any other methods of straightness measurement on any axis.

The square and indicator are set up to measure straightness in an axial plane. After straightness measurement, the ram is moved on the axis normal to the plane of straightness measurement, the indicator is mounted on an extension, and straightness is measured again. Roll in any particular vertical position (radians) is nominally the difference between the two measured straightnesses at that position divided by distance between the two ram positions.

8.0 PROCESSING THE MEASURED DATA

8.1 Axes

In the system of this report all parametric errors are defined relative to axes which are fixed with respect to the workpiece. For a fixed-table machine the axes are stationary. For a moving-table machine they are fixed to, and move with, the table. This concept is consistent with the purpose of a coordinate measuring machine, which is to measure workpieces. Take for example a straightness calibration per Fig. 3, where the reference straightedge is fixed to the table and the indicator to the ram. If the indicator shows the machine is straight, a probe on the ram will show a straight workpiece on the table to be straight. Thus there is a correlation between the parametric calibration and measurement of the workpiece. If, on the other hand, the calibration where performed with the straightedge fixed relative to the ram and the indicator on the table, and if there were rotational errors, there would be no correlation between the parametric calibration and workpiece measurements. Thus if the straightedge showed the machine to be straight, measurement of a straight workpiece on the table would show the workpiece to be curved.

A first difficulty with implementing this concept occurs when mounting the fixed element of a gaging system on the table is impractical. An example is mounting the straightness reflector of a Wollaston-prism straightness system for Z measurement on a moving bridge machine. A practical solution is to mount the reflector on the ram, and to correct the straightness measurements for the effects of angular errors.

A second difficulty occurs when movement of machine components bends the table. An example is a machine with a thin table where the table surface is a guideway. Correct location of the axes depends on where on the table the workpiece is located. The only way to resolve this difficulty is to define location of the workpiece, and to fix the axes to that location.

Copyright ASME International
Provided by IHS under license with ASME
No reproduction or networking permitted without license from IHS
Not for Resale

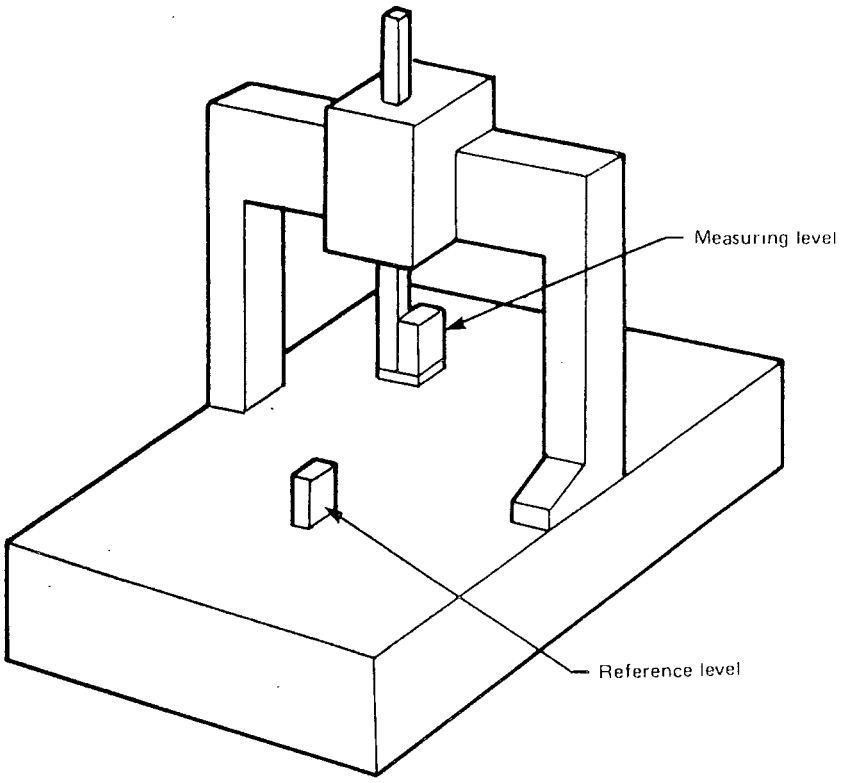

FIG. 12

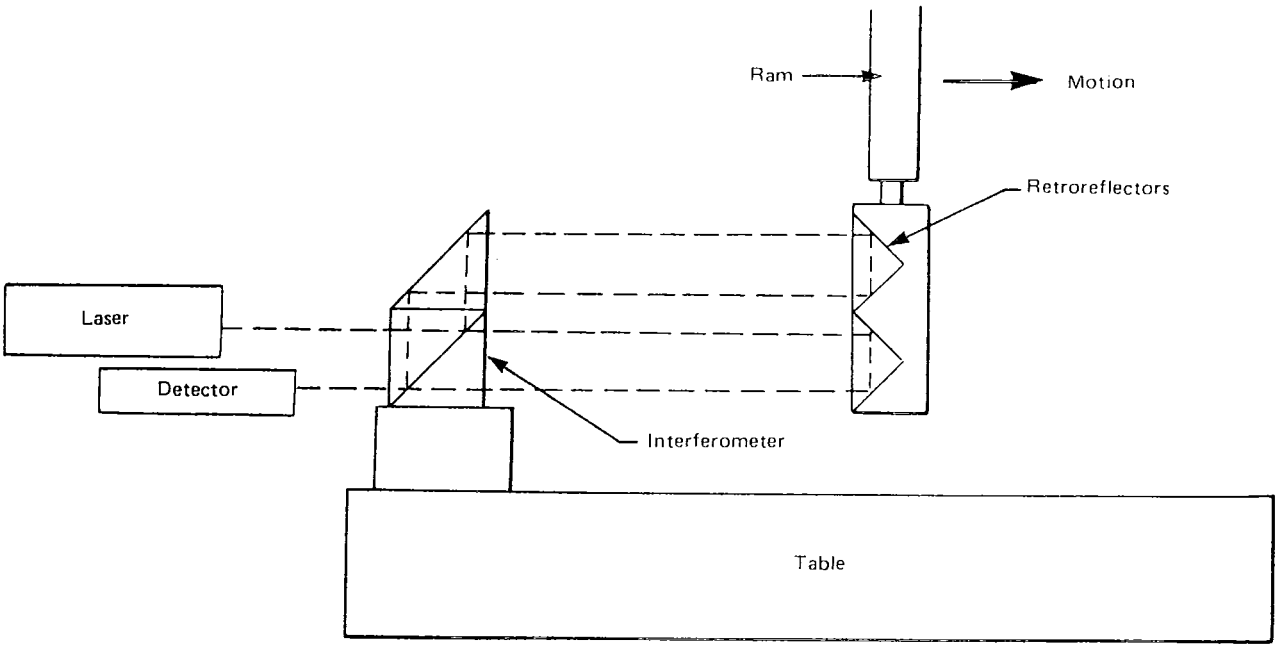

FIG. 13

Copyright ASME International
Provided by IHS under license with ASME
No reproduction or networking permitted without license from IHS
Not for Resale

For such cases the recommendation of this report is that three workpieces support points on the table to be defined, and that the user be made aware that mounting the workpiece to other points will compromise accuracy of the calibration. For each calibration measurement the fixed element of the gaging system (straightedge, level, interferometer, etc.) should be fixed to the mounting points. If this is impractical, movement of the fixed gaging element relative to the mounting points should be measured, and the measured straightness data should be corrected.

A related difficulty is bending guideways due to workpiece weight. Again this occurs when a thin table is used as a guideway. The solution is to locate the workpiece support points directly in line with the table support points. Then a workpiece mounted at the correct support points will not bend the table.

8.2 Measurement Lines

Often it is impossible or impractical to make calibration measurement in a manner consistent with definitions of the parametric errors. The first case is where the movable gaging point (indicator ball, corner cube vertex, etc.) cannot be placed at the probe reference point. The second is where the probe reference point cannot be placed at the machine axis origin at the start of a calibration measurement run. For both cases, measured data for translational parametric errors must be corrected for rotational errors. The correction is always the rotational error (radians) times axial distance from a point of rotation. Care is needed to identify the proper point of rotation, and the proper sign, for the correction.

8.3 Squareness

Measurements for squareness parametric errors always require correction. The correction is complicated, and careful attention to signs is required.

The first step is to determine reference square error, Fig. 15. For the optical square, reference square error is calibrated error for the square. For the mechanical square deviations of the points where squareness measurements were made, relative to a perfect square, must be determined from the calibration certificate for the square. An angular error (radians) for each leg is determined as the difference between errors at the two measurement points divided by distance between them. Reference square error is the sum of errors for the two legs. For crossed ball bar measurements, the reference square error is zero.

The second step is to determine measured point squareness error, Fig. 16. For optical and mechanical square measurements and angle A (radians) for each leg is determined as difference between two squareness measurements divided by distance between them. The measured point squareness error is the sum of the two angles A plus the reference square error. For crossed ball bar measurements the measured point squareness error is difference between measured bar lengths divided by bar length.

The third step is to determine the squareness error, Fig. 17. An angle B (radians) is calculated for each leg as the difference between straightnesses of the two measurement points divided by distance between them. For crossed ball bars the measurement points are positions of the balls. The squareness error parameter is the sum of the two angles B, plus the measured point squareness error.

8.4 Roll

Where roll is determined from differences between two sets of straightness measurements, nominal straightnesses must be corrected for skew. Skew is illustrated in Fig. 18.

To related skew correction to a real case, consider the moving-bridge machine of Fig. 1, and the square-and-indicator roll measurement of Fig. 14. For the first (left) position the reference line is the face of the square. We attach this first reference line to the carriage, and move to the second (right) position. The second reference line is again the face of the square.

The nominal roll calculation assumes the first and second reference lines are parallel after the move. In fact they are not. They have a skew angle (Fig. 18) equal to the change in X roll as the carriage moves from the first to the second position. For any Z position, the correction to Z roll is skew angle times Z, divided by X distance between the first and second positions. Care must be taken to ensure signs are correct.

There is an obvious problem if rolls for all axes of a machine are determined by the parallel straightness method. Skew correction for each axis depends on corrected roll for another axis, and none of the roll corrections are known. There are three remedies. The first is to determine roll for at least one axis by an alternative method, such as by means of levels. The second is to fixture the gaging system so skew angle is repeatable from one calibration to another, and to adjust the fixture to give zero skew. For example in Fig. 14, if the square were set on a known

Copyright ASME International
Provided by IHS under license with ASME
No reproduction or networking permitted without license from IHS
Not for Resale

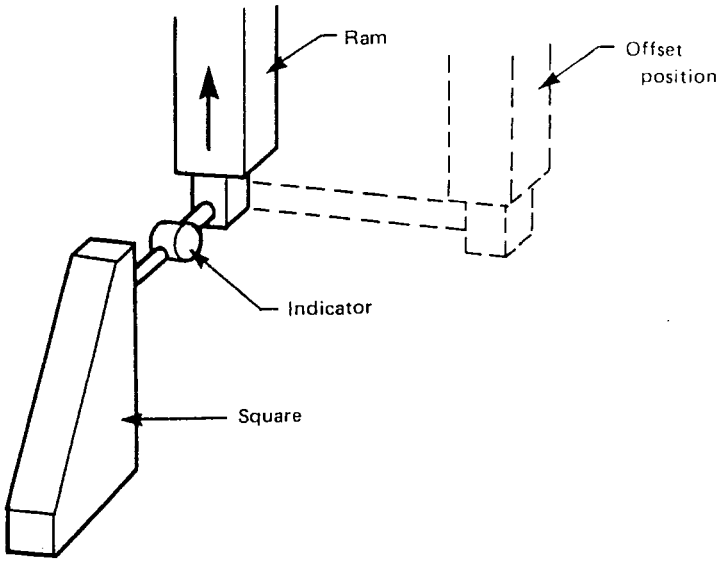

FIG. 14

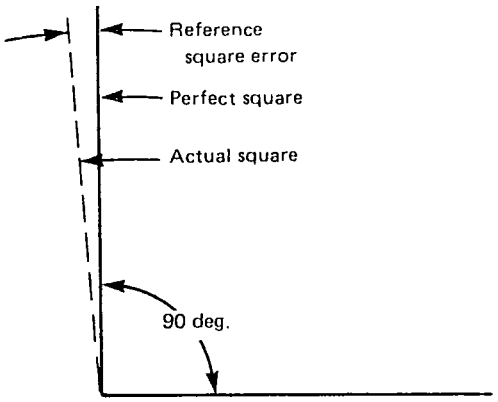

FIG. 15

Copyright ASME International
Provided by IHS under license with ASME
No reproduction or networking permitted without license from IHS
Not for Resale

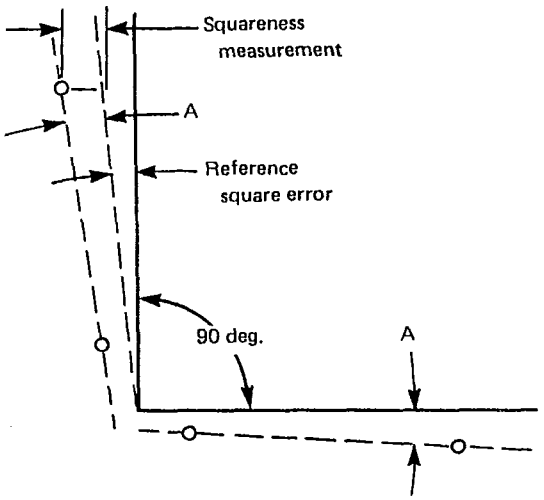

FIG. 16

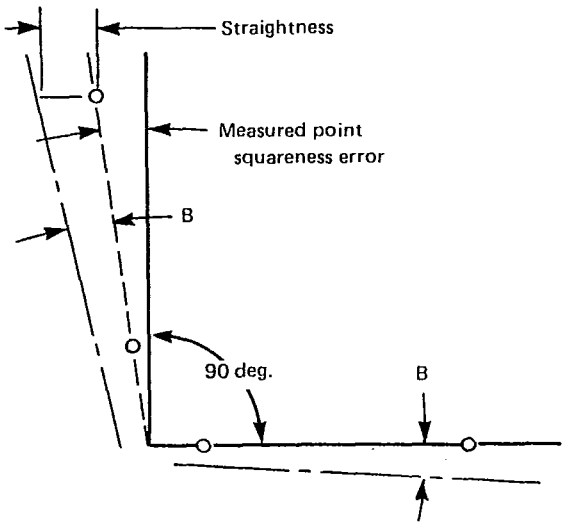

FIG. 17

surface, and the square were moved between the two straightness runs rather than the carriage, skew angle would be rotation of the square about X in moving from one position to the other. This could be adjusted to zero, either mechanically or in software. The third remedy is to determine two sets of measurements each sensitive to the same two skews. If these can be expressed as mathematical equations, and if all the inputs are known, the equations can be solved simultaneously for the two skew angles.

9.0 TERMINOLOGY

9.1 General

The following terms are recommended for use in specifying and discussing parametric calibrations.

9.2 Glossary

alignment laser — a laser for straightness measurement where center of the laser beam is used as a straightedge

autocollimator — an optical device for measurement of rotation of a flat mirror

axial plane — a plane parallel to two axes

axis — a line relative to which parametric errors are defined

axis origin — a point, fixed and defined relative to the machine table, at which the machine axes intersect

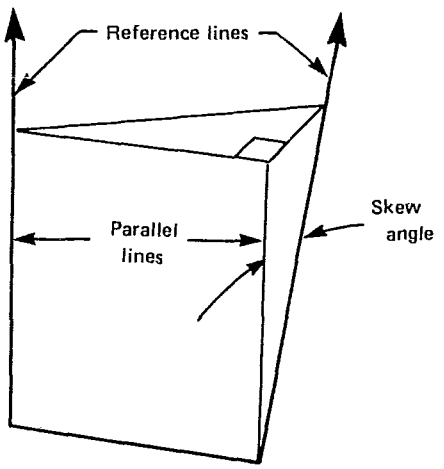

FIG. 18

ball bar — a gage consisting of two highly-spherical tooling balls of the same diameter connected by a rigid bar

calibration — determination of the errors of a gage or machine

gage — a mechanical artifact of high precision used either for checking a part or for checking the accuracy of a machine, or a measuring device with a proportional range and some form of indicator, either analog or digital

Copyright ASME International
Provided by IHS under license with ASME
No reproduction or networking permitted without license from IHS
Not for Resale

laser interferometer — a fringe-counting interferometer which uses a laser as a light source

movable component — a major structural component which is movable relative to the workpiece during measurement

parametric calibration — measurement of parametric errors of each movable component of a machine

parametric error — linear or rotational deviation of a movable component from its nominal position

translational parametric error — a parametric error which is a translation measured relative to machine axes

rotational parametric error — a parametric error which is a rotation about an axial-direction line

pitch — an angular motion of a movable component, designed for linear motion, about an axis perpendicular to the motion direction and perpendicular to the yaw axis

positioning error — difference between the true displacement of a defined point on a movable component along a machine axis and that indicated by the machine measuring system

probe reference point — a point fixed and defined relative to the ram for which translational parametric errors are determined when the point is on a machine axis

roll — angular motion of a movable component, designed for linear motion, about the linear motion axis

squareness — angle between two axes minus a right angle

staging — the moving of a gage from a first position to a second position such that a series of measurements started at the first position may be continued in the second position

step gage — a gage comprising a rigid bar with calibrated steps used for determining accuracy of a distance measurement

straightness — lateral motion of a movable component, designed for linear motion, relative to the linear motion axis

table — the component of a machine on which the workpiece is mounted

workpiece — an object to be measured

yaw — the angular motion of a movable component, designed for linear motion, about a specified axis perpendicular to the motion direction. In the case of a movable component with horizontal motion, the specified axis shall be vertical unless explicitly specified. For a movable component that does not have horizontal motion, the axis must be explicitly specified.

10.0 REFERENCES FOR FURTHER STUDY

ANSI/ASME B89.1.12M-1985, *Methods for Performance Evaluation of Coordinate Measuring Machines*

Tlusty, J., *Testing of Accuracy of Machine Tools* (supplement to the MTTF reports; available from the same sources), UCRL-52960-Supp. 1 (1980)

Bryan, J., *The Abbe Principle Revisited — An Updated Interpretation*, Lawrence Livermore National Laboratory, Livermore, CA, UCRL-82591 (1979)

Bryan, J. B., *Precision Engineering 1*, No. 1, 13 (1979)

Hocken, R., et al., "Three Dimensional Metrology," *Annals of the CIRP 26/2* (1979)

Tlusty, J., ed., *Specifications and Tests of Metal Cutting Machine Tools*, University of Manchester, Revell and George Ltd. (1970)

Bryan, J., et al., *Annals of CIRP 16*, pp. 203–215 (1968)

Bryan, J. B., and Pearson, J. W., *Machine Tool Metrology*, Lawrence Livermore National Laboratory, Livermore, CA, UCRL-71164 (July 9, 1968)

Schlesinger, G., *Inspection Tests of Machine Tools*, 1927; latest edition is *Testing Machine Tools*, 8th ed., revised by F. Koenigsberger and M. Burdekin, Pergamon Press, New York (1978)

NMTBA, *Definitions and Evaluation of Accuracy and Repeatability for Numerically Controlled Machine Tools*, second edition (1972)

Tlusty, J., "System and Methods of Testing Machine Tools," *Microtechnic 13*, 162 (1959)

Bryan, J., Clouser, R., and Holland, E., "Spindle Accuracy," *American Machinist*, Spec. Report No. 612 (December 4, 1967)

ANSI Draft Standard B89.3.4

Bryan, J. B., and Pearson, J. W., *Machine Tool Metrology*, Technical Paper 1068-753, ASME (1968)

CIRP Unification Document, "Three-Dimensional Uncertainty," *Annals of the CIRP 28/2* (1979)

Reeve, C. P., NBSIR 74-532 (1974)

Copyright ASME International
Provided by IHS under license with ASME
No reproduction or networking permitted without license from IHS

Not for Resale

ASME B89 TECH*REPT 90 ■ 0759670 0081912 4 ■

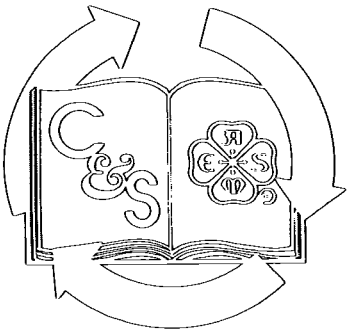

This document is printed
on 50% recycled paper.

50% RECOVERED PAPER MATERIAL means paper waste generated after the completion of the papermaking process, such as postconsumer materials, text books, envelopes, bindery waste, printing waste, cutting and converting waste, butt rolls, obsolete inventories, and rejected unused stock.

ISBN #0-7918-2095-5

L00070

Copyright ASME International
Provided by IHS under license with ASME
No reproduction or networking permitted without license from IHS

Not for Resale