ASME B89 TECH*PAPER 90 ■ 0759670 0082325 5 ■

ASME B89
TECHNICAL PAPER 1990

Space Plate Test Recommendations for Coordinate Measuring Machines

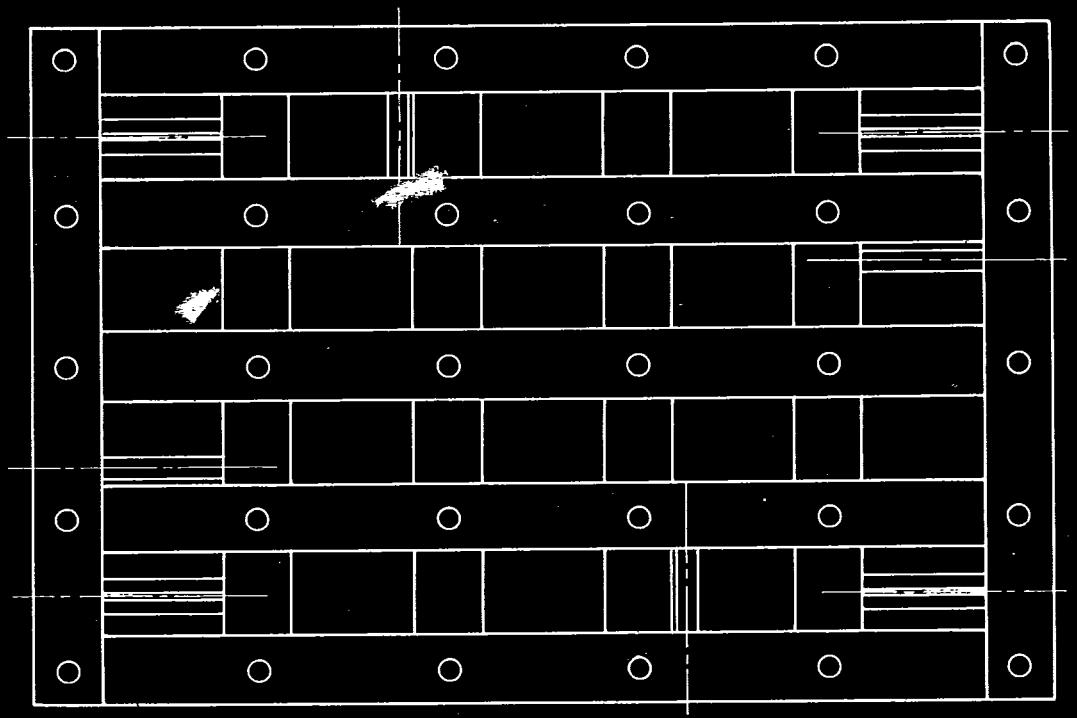

The American Society of Mechanical Engineers

COPYRIGHT American Society of Mechanical Engineers
Licensed by Information Handling Services

ASME B89 TECHNICAL PAPER

Space Plate Test Recommendations for Coordinate Measuring Machines

The American Society of Mechanical Engineers

345 East 47th Street, New York, N.Y. 10017

COPYRIGHT American Society of Mechanical Engineers
Licensed by Information Handling Services

Date of Issuance: February 15, 1991

No part of this document may be reproduced in any form, in an electronic retrieval system or otherwise, without the prior written permission of the publisher.

Copyright © 1991 by
THE AMERICAN SOCIETY OF MECHANICAL ENGINEERS
All Rights Reserved
Printed in U.S.A.

COPYRIGHT American Society of Mechanical Engineers
Licensed by Information Handling Services

FOREWORD

This technical paper is the final report of Task Force E — Ball Plates, of ASME Working Group B89.1.12, Coordinate Measuring Machines (CMM). Committee members of Task Force E, and authors of this technical paper are:

Stanley R. Drake
William S. Gehner
Kenneth E. Moser, Chairman
Benjamin R. Taylor

This paper has been reviewed and approved by Working Group B89.1.12.

COPYRIGHT American Society of Mechanical Engineers
Licensed by Information Handling Services

CONTENTS

Foreword iii

1 Purpose 1
2 Space Plate Recommendations 1
3 Profiles of X, Y, and Z Deviations 2
4 Space Plate Design Recommendations 2

Section A — Four-Point Method of Data Analysis

A1 General 3
A2 Derivation of Three-Dimensional Transformation Equations in Orthogonal Coordinate Systems 5
A3 Derivation of the Equations for H, J, K, T, W, P Constants from Four Specified Points 6

Section B — Least Squares Fit Method of Data Analysis

B1 General 11

Section C — Point-to-Point Method of Data Analysis

C1 General 16

Section D — Space Plate Design Recommendations 36

Figures

A-1 The Four-Point Method 4
C-1 Profiles of Space Plate Deviations 18
C-2 Layout of Balls on Space Plate 32
D-1 Space Plate 37
D-2 Item 1 38
D-3 Item 2 39
D-4 Items 3 and 10 39
D-5 Item 4 40
D-6 Item 5 40
D-7 Item 6 41
D-8 Item 7 41
D-9 Item 11 42

Tables

A-1 Auxiliary Positions of Reference Data 8
A-2 Final Position of Reference Data 9
A-3 Listing of X, Y, and Z Deviations 10
B-1 Final Position of Reference Data 13
B-2 Final Position of Measured Data 14
B-3 Listing of X, Y, and Z Deviations 15
C-1 Distances From Ball 1 33
C-2 Distances From Ball 6 34
C-3 Distances From Ball 30 35
D-1 Material List 36

COPYRIGHT American Society of Mechanical Engineers
Licensed by Information Handling Services

SPACE PLATE TEST RECOMMENDATIONS FOR COORDINATE MEASURING MACHINES

1 PURPOSE

The purpose of this technical paper is to give guidance for analyzing the performance capabilities of CMM's using space plate technology. It is intended as a reference document to the ANSI/ASME B89.1.12 Standard, "Methods for Performance Evaluation of Coordinate Measuring Machines."

2 SPACE PLATE RECOMMENDATIONS

A three-dimensional space plate or similar artifact is an economical and practical technique for estimating the measuring uncertainties of CMM's and isolating the sources of errors. Conventional techniques to determine the measurement capability of a CMM are complex. Analysis of a CMM shows that there are 21 degrees-of-freedom for a measurement within the volume swept by a probe. It is possible to measure the individual parameters of geometry of a measuring machine such as pitch, yaw, roll, or orthogonality errors between the three axes. These errors can then be combined to determine an overall volumetric error between any two points in the specified working volume of the CMM. In lieu of this time-consuming approach, the three-dimensional space plate is recommended for consideration in determining the measuring capability of CMM's. However, space plate technology may not be applicable for very large CMM's. The limiting factors would be the weight of the plate and the capability to certify the XYZ coordinates.

A CMM may be calibrated or evaluated by positioning the space plate on the CMM in the desired orientation, measuring the XYZ coordinates of the balls and then comparing these coordinates with the certified XYZ coordinates traceable to National Institute of Standards and Technology (NIST). If the distance between corresponding pairs of points differs between the two sets, the differences are attributed to errors in the CMM. In order to make this comparison, the two sets of data are superimposed in the same coordinate system and the XYZ coordinates of matched pairs of points are merely subtracted. This gives the XYZ components of the differences between the two sets of data.

The superimposition may be done either physically or mathematically. In the physical approach, the plate is "tapped in" or adjusted on the CMM until certain specified balls produce the same coordinates as on the space plate. The problem with this approach is that the "tapping in" process is very difficult, tedious and, at best, a compromise.

In the mathematical approach, no special orientation is required for the space plate on the CMM. The data may be superimposed mathematically according to some specified scheme. This approach is preferred because it saves time and effort and does not by itself introduce any additional errors. Computer software has been developed to perform this required mathematical evaluation of the data. Three techniques are listed here for consideration.

(a) Four-point method
(b) Least squares fit method
(c) Point-to-point method

2.1 Four-Point Method

In the four-point method, an auxiliary set of coordinate axes is established in both sets of data through certain specified balls. By transforming both sets of data into these coordinate systems, the data are, in effect, superimposed. A full elucidation of the mathematical steps used in the FORTRAN program is contained in Section A.

Data analyzed by the four-point method are found in Tables A-1, A-2, and A-3. Table A-1 is data from a CMM with an auxiliary set of coordinate axes fitted through the origin at ball 1, X-axis parallel to balls 1 and 6, and XY plane through balls 1, 6, and 30. Table A-2 is a set of reference data with the same set of auxiliary axes. Therefore, Table A-3 is a listing of the X, Y, and Z deviations for the corresponding balls.

COPYRIGHT American Society of Mechanical Engineers
Licensed by Information Handling Services

2.2 Least Squares Fit Method

In the least squares fit method, the position of the reference data is adjusted so that the sum of the squares of the undirected distances between corresponding points in both sets of data is a minimum. In the least squares fit method, the coordinate axes do not necessarily become superimposed. A full elucidation of the mathematical steps used in the FORTRAN program is found in Section B.

Data analyzed by the least squares fit method are found in Tables B-1, B-2, and B-3. The reference data in Table B-1 have been adjusted to the data in Table B-2 such that the sum of the squares of the undirected distances between corresponding data points in both sets of data is a minimum. Table B-3 is a listing of the X, Y, and Z deviations for the corresponding balls.

2.3 Point-To-Point Method

In the point-to-point method, the straight line distances are calculated from one of the balls to all the other balls in both the reference data and the measured data. These distances between corresponding pairs of balls are then merely subtracted. In effect, this superimposes the two data sets and is analogous to the four-point method, except that only one axis (a line through the two balls) instead of three is superimposed. A full elucidation is presented in detail in Section C.

Data analyzed by the point-to-point method are found in Tables C-1, C-2, and C-3, where the straight line distances are calculated for the measured and reference distances from balls 1, 6, and 30, respectively. In each case, the differences between the measured and reference distances are shown as deviations.

3 PROFILES OF X, Y AND Z DEVIATIONS

Statistical analysis of the X, Y, and Z deviations from the four-point method can now be performed. These statistical calculations will give an indication of the CMM's total measuring errors within the volume of the space plate at the time the data were generated.

This is not all-inclusive from a practical viewpoint. All possible errors caused by the 21 degrees-of-freedom of the CMM, including random errors, are included together. There is a large percent of dimensions of piece parts that are measured along a single axis or in a single plane. When measurements with the smallest uncertainty are required, it is recommended that the uncertainties be applied with this logic in mind. Large uncertainties that were arrived at from the volumetric approach should not be applied to these single axis and plane measurements.

Some profiles of X, Y, and Z deviations are presented with computer-generated examples. In all examples presented, it is assumed that there are no errors in the 21 degrees-of-freedom of the CMM, except for those in the profile being exemplified (Fig. C-1).

With the space plate in the horizontal position, all of the profiles demonstrated are an accurate representation of the CMM's geometry errors. This is true whenever the cluster of balls is parallel to any one of the three orthogonal planes of the CMM. However, with the space plate in the tilted position, some of the profiles are slightly changed by an interaction of the other axes. By reviewing the profiles in both the horizontal and tilted positions, it is clear that the sources of errors can be singled out more than 90% of the time. As technicians become more experienced in reviewing these profiles and familiar with the different machine designs, they will become more efficient in identifying the geometry errors associated with that particular CMM.

When observing these profiles, it is important to know the organization of the balls on the space plate, which is illustrated in Fig. C-2. These ball numbers correspond to the numbers shown on the sample profiles (Fig. C-1).

4 SPACE PLATE DESIGN RECOMMENDATIONS

Recommendations for design and construction of the space plate are illustrated in Section D.

COPYRIGHT American Society of Mechanical Engineers
Licensed by Information Handling Services

SPACE PLATE TEST RECOMMENDATIONS
FOR COORDINATE MEASURING MACHINES

SECTION A
FOUR-POINT METHOD OF DATA ANALYSIS

A1 GENERAL

In the four-point method, the reference data set is mathematically superimposed onto the CMM data set in such a way that a set of auxiliary axes established in each data set through four specified balls is superimposed. The desired deviations between the two sets of data are then obtained by merely subtracting the XYZ coordinates of corresponding balls. The total straight line three-dimensional distance D between corresponding balls is then found from

$$D=\sqrt{(X-X')^2+(Y-Y')^2+(Z-Z')^2} \qquad (1)$$

Where X, Y, Z are the original coordinates from the CMM data and X′, Y′, Z′ are the coordinates of the final position of the reference data after transformation. (All subscripts have been omitted for clarity.)

The problem of finding the X′Y′Z′ coordinates is best understood by referring to Fig. A-1 where the CMM data set is represented by rectangle 1 and the reference data set by rectangle 2. (The Z axis has been omitted for clarity but with no loss of generality.) The XYZ coordinates on which all the data are plotted are understood to be the coordinate axes of the CMM, for it is in this coordinate system that D and its XYZ components are desired.

The auxiliary axes that are put through the four specified balls are shown by the dotted axes XA, YA and XB, YB. When the reference data set is transformed onto the CMM set, the rectangle 2 will be moved up onto rectangle 1 so that OB coincides with OA and the XB axis coincides with the XA axis. (In three dimensions, the XB,YB plane will also coincide with the XA,YA plane.)

The three-dimensional equations used to transform data from one coordinate system to another are derived in this section. These equations require the six constants H,J,K,T,W,P to be known. These constants describe the position and angular orientation of the coordinate system into which the data are to be transformed. In the four-point method, this position and angular orientation is dictated by four specified balls. The derivation of the equations for these six constants using these four points is given in this section.

In order to move rectangle 2 up onto rectangle 1 it is not sufficient to merely transform the reference data into the XB,YB system and the CMM data into the XA,YA system. While this does superimpose the two data sets, they would no longer reside at the position of rectangle 1, but rather at the origin of the XY system such that OB and OA coincide at 0. Since it is required that the deviations D and the XYZ components be measured relative to the CMM axes, the final position of the two superimposed sets must be at the original position of rectangle 1.

To do this, the reference data set must be transformed into a coordinate system oriented as shown by the dotted axes X′,Y′. These transformed values, when plotted on the XY coordinate system, will place rectangle 2 on top of rectangle 1 as desired. If the six constants that define the position and angular orientation of the X′Y′ system are designated H′,J′,K′,T′,W′,P′, the overall problem in the four-point method reduces to one of finding these six constants. This is done in the following manner.

The four points X1,Y1,Z1,0 are established on the XYZ axes. The point 0 must be at the origin; the other three can be at any position along the axes. (These are not the four specified balls for the XA,YA and XB,YB systems.) Using the four specified balls, the six transformation constants for transforming rectangle 1 into the XA,YA system are calculated. With these, the coordinates of the four points X1,Y1,Z1,0 are forward transformed. When these transformed values are plotted on the XYZ coordinate system they become the points XT1,YT1,ZT1,OT and form the coordinate system XT,YT,ZT, positioned as shown in Fig. A-1.

Again using the four specified balls, the six transformation constants that would transform rectangle 2 into the XB,YB system are calculated. Using these constants an inverse transformation is now carried

COPYRIGHT American Society of Mechanical Engineers
Licensed by Information Handling Services

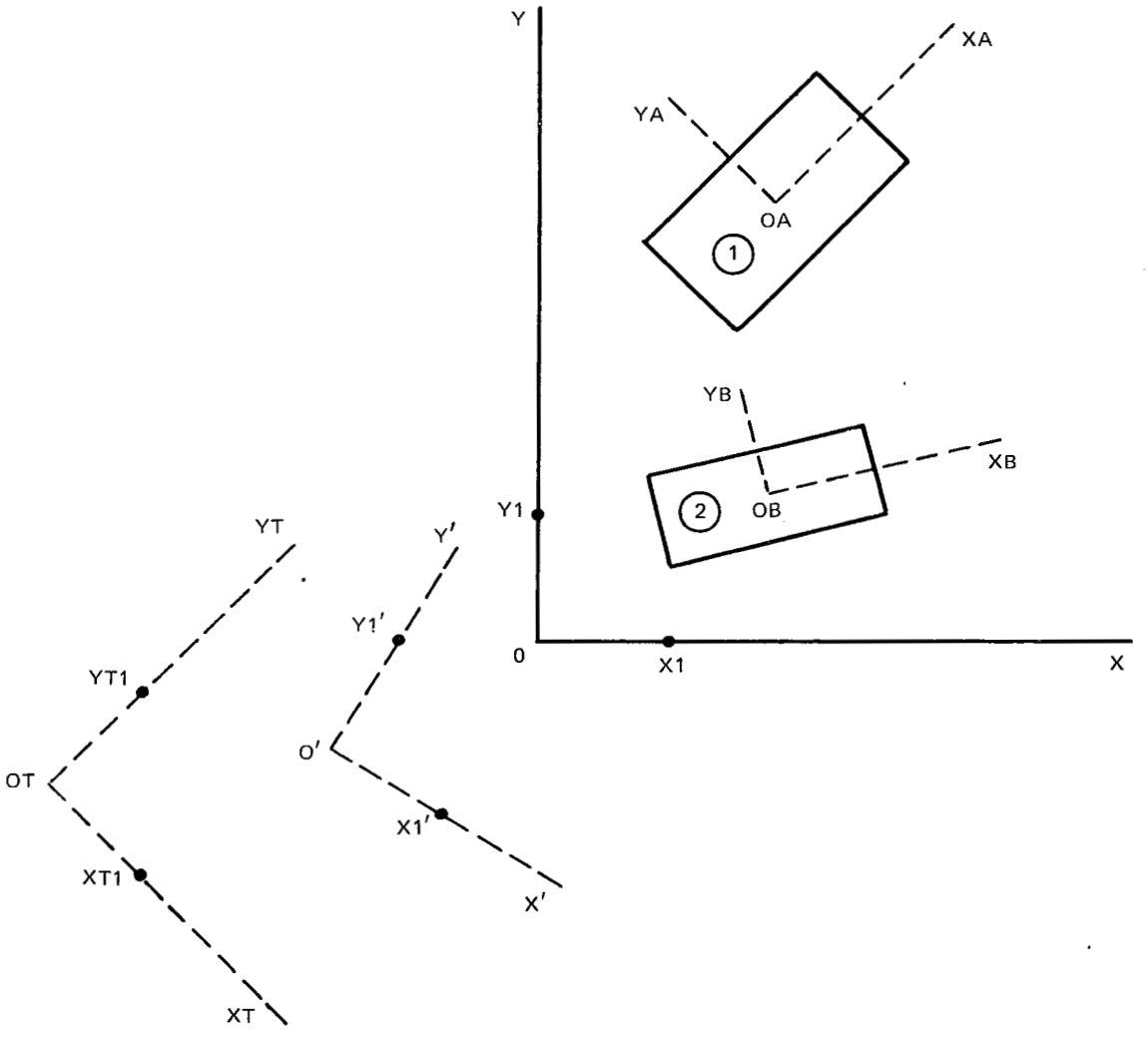

FIG. A-1 THE FOUR-POINT METHOD

COPYRIGHT American Society of Mechanical Engineers
Licensed by Information Handling Services

out on the coordinates of the points XT1,YT1, ZT1,OT. When these transformed values are plotted on the XYZ coordinate system they become the points X1′,Y1′,Z1′,0′ and form the desired coordinate system X′,Y′,Z′, positioned as shown. Finally, the desired six transformation constants H′,J′,K′,T′,W′,P′ that define the position of this system are found by using the four points X1′,Y1′,Z1′,0′ in Eqs. (9) through (17).

It is worth noting that the reason the analysis was carried out in this manner was to obtain not only the deviations but also the six transformation constants that allowed the transformation of rectangle 2 onto 1 to be made in one step. In this way, the three transformation constants T′,W′,P′, which describe the angular rotation of the primed system, directly give valuable information regarding how the CMM data are angularly oriented relative to the machine. If the six constants for a one-step transformation are not required, the analysis can be done in the following shorter, two-step operation.

Using the four specified balls, the six transformation constants for transforming rectangle 2 into the XB,YB system are calculated. With these, the coordinates of all the points in the reference set are transformed into the XB,YB system. When these transformed values are plotted on the XYZ system, the reference set lies at the origin so the OB coincides with O. Finally, these transformed values are inversely transformed using the six constants (obtained from the four specified balls) that would transform the CMM data set into the XA,YA system. Plotting these final transformed values on the XYZ coordinate system results in rectangle 2 being superimposed onto rectangle 1 such that the XB,YB axes coincide with the XA,YA axes.

A2 DERIVATION OF THREE-DIMENSIONAL TRANSFORMATION EQUATIONS IN ORTHOGONAL COORDINATE SYSTEMS

Let it be required to find the transformation equations between an XYZ coordinate system and an X′,Y′,Z′ coordinate system. These equations will contain the six transformation constants H,J,K,T,W,P which are considered to be known. The H,J,K constants define the position of the origin of the primed system as measured in the XYZ coordinate system, and the T,W,P constants define the angular orientation of the primed system about the XYZ axes. The angles T,W,P will be combined to form nine coefficients.

The form of these nine coefficients will be independent of the sequence of application of the H,J,K constants, but will vary depending on the sequence of rotation of the T,W,P angles. For this discussion, the sequence will be first about the Z axis (P), then about the Y axis (W), and then about the X axis (T). The axes will be labeled according to the right hand rule (forefinger points in direction of +X, second finger in direction of +Y, and thumb in direction of +Z), and the positive direction of all angles will be counterclockwise when looking toward the origin from the positive end of the rotation axis.

The derivation can be carried out in three separate two-dimensional transformations with the third axis merely carried along. From any elementary text on analytical geometry, the two-dimensional transformation equations for rotation only about the Z axis are

$$\begin{aligned} XA &= +X\cos P + Y\sin P \\ YA &= -X\sin P + Y\cos P \end{aligned} \tag{2}$$

Including the lateral translations of H and J gives

$$\begin{aligned} XA &= +(X-H)\cos P + (Y-J)\sin P \\ YA &= -(X-H)\sin P + (Y-J)\cos P \end{aligned}$$

No change will be encountered in the Z direction in this transformation, making the third equation ZA = Z − K. The complete set of transformation equations for the lateral shift and the first rotation (about Z) are

$$\begin{aligned} XA &= +(X-H)\cos P + (Y-J)\sin P \\ YA &= -(X-H)\sin P + (Y-J)\cos P \\ ZA &= +(Z-K) \end{aligned} \tag{3}$$

The second rotation, which is about the YA axis (or about the Y axis if the transformation data are replotted on the XYZ coordinate system), can be carried out by viewing the coordinate system from along the YA axis. Here the ZA axis is in the X direction, the XA axis is in the Y direction, and the translation constants H,J,K have been omitted because they are not needed. Applying the basic form of Eq. (2) here and adding YB = YA gives

$$\begin{aligned} XB &= XA\cos W + ZA\sin W \\ YB &= YA \\ ZB &= XA\sin W + ZA\cos W \end{aligned} \tag{4}$$

To perform the last rotation, which is about the

COPYRIGHT American Society of Mechanical Engineers
Licensed by Information Handling Services

XB axis (or about the X axis if the transformed data are replotted on the XYZ coordinate system), the system is viewed along the XB axis. Again applying the basic form of Eq. (2) and adding XC = XB gives

$$\begin{aligned} XC &= XB \\ YC &= ZB \sin T + YB \cos T \\ ZC &= ZB \cos T - YB \sin T \end{aligned} \tag{5}$$

Combining Eqs. (3), (4), and (5), including the lateral shift K in the Z direction, and relabeling the XC,YC,ZC system to be the X′,Y′,Z′ system gives the desired three-dimensional transformation equations as

$$\begin{aligned} X' &= A1\,(X-H) + A2\,(Y-J) + A3\,(Z-K) \\ Y' &= A4\,(X-H) + A5\,(Y-J) + A6\,(Z-K) \\ Z' &= A7\,(X-H) + A8\,(Y-J) + A9\,(Z-K) \end{aligned} \tag{6}$$

where the nine coefficients A1 through A9 are

$$\begin{aligned} A1 &= (\cos P)(\cos W) \\ A2 &= (\sin P)(\cos W) \\ A3 &= -\sin W \\ A4 &= (\cos P)(\sin W)(\sin T) - (\sin P)(\cos T) \\ A5 &= (\sin P)(\sin W)(\sin T) + (\cos P)(\cos T) \\ A6 &= (\cos W)(\sin T) \\ A7 &= (\cos P)(\sin W)(\cos T) + (\sin P)(\sin T) \\ A8 &= (\sin P)(\sin W)(\cos T) - (\cos P)(\sin T) \\ A9 &= (\cos W)(\cos T) \end{aligned} \tag{7}$$

Equation (6) is known as the set of forward transformation equations to be used when the coordinates in the unprimed system (XYZ) are known. If the coordinates in the primed system (X′Y′Z′) are known, then the inverse set must be used. This set is found by simply rearranging Eq. (6), resulting in

$$\begin{aligned} X &= H + A1\,X' + A4\,Y' + A7\,Z' \\ Y &= J + A2\,X' + A5\,Y' + A8\,Z' \\ Z &= K + A3\,X' + A6\,Y' + A9\,Z' \end{aligned} \tag{8}$$

where the nine coefficients A1 through A9 are the same as those in Eq. (7).

A3 DERIVATION OF THE EQUATIONS FOR THE H,J,K,T,W,P CONSTANTS FROM FOUR SPECIFIED POINTS

Equations must be found for the six transformation constants H,J,K and T,W,P which will define an auxiliary coordinate system oriented by means of four specified points. This auxiliary system will be designated the primed system (X′Y′Z′). By definition, the H,J,K defines the position of the origin of the primed system as measured in the unprimed (XYZ) system, and the T,W,P angles define the angular orientation of the primed system as measured in the unprimed system.

Let there be a set of N points with coordinates X1,Y1,Z1,X2,Y2,Z2, etc. in the original (unprimed) system. Four of these points, designated M1,M2, M3,M4, will be selected to define the axes in the auxiliary system.

The first point, M1, will define the position of the origin of the primed system. The next two points, M2 and M3, will define the angular orientation of the X′ axis. The last point, M4, together with the X′ axis, will define the angular orientation of the X′Y′ plane. The Y′ axis is then uniquely determined because it must pass through the origin, lie in the X′Y′ plane, and be perpendicular to the X′ axis. The Z′ axis is also uniquely determined since it must pass through the origin and be mutually perpendicular to both the X′ and Y′ axes.

The positive direction of the X′ axis is from M2 to M3. The positive direction of the Y′ axis is from the X′ axis toward M4. The positive direction of the Z′ axis is according to the right hand rule where the forefinger points in the direction of +X′, the second finger in the direction of +Y′, and the thumb in the direction of +Z′.

Let the coordinates of the four points M1,M2,M3, M4 in the unprimed system be X1,Y1,Z1,X2,Y2, Z2,X3,Y3,Z3, and X4,Y4,Z4, respectively. (M1,M2, M3,M4 can be any of the N points. The use of the numbers 1,2,3,4 for the coordinates is merely for convenience.) By definition,

$$\begin{aligned} H &= X1 \\ J &= Y1 \\ K &= Z1 \end{aligned} \tag{9}$$

The angles T,W,P are the angles about the XYZ axes that the unprimed system must be rotated through to put the unprimed axes in the same angular orientation as those in the primed system. The sequence of rotation is important and, in this case, since the orientation of the X′ axis is specified, rotation about the X axis must be last, with either Z or Y first. The selected sequence will be Z,Y,X. All angles are positive when measured counterclockwise while looking toward the origin from the positive end of the rotation axis.

COPYRIGHT American Society of Mechanical Engineers
Licensed by Information Handling Services

For the first rotation (angle P), about the Z axis, let

$$\begin{aligned} A &= X3 - X2 \\ B &= Y3 - Y2 \\ C &= Z3 - Z2 \end{aligned} \tag{10}$$

It can be shown that the angle P in degrees will then be as follows:

$$\begin{aligned} &\text{For } A=0 \text{ and } B=0 && P=0 \\ &A=0 && P=(\text{Sign of } B)*90 \\ &A>0 && P=\tan^{-1}(B/A) \\ &A<0 && P=180+\tan^{-1}(B/A) \end{aligned} \tag{11}$$

For the second rotation (angle W), about the new position of the Y axis, it can be shown that angle W in degrees will be as follows:

$$\begin{aligned} &\text{For } A=0 \text{ and } B=0 && W=-(\text{Sign of } C)*90 \\ &A<>0 \text{ and } B<>0 && W=-\tan^{-1}[C/\sqrt{(A^2+B^2)}] \end{aligned} \tag{12}$$

For the third rotation (angle T), about the new position of the X axis, let

$$\begin{aligned} D &= X4 - X1 \\ E &= Y4 - Y1 \\ F &= Z4 - Z1 \end{aligned} \tag{13}$$

and from a transformation through the first two angles P and W let

$$G = D(\cos P)(\sin W) + E(\sin P)(\sin W) + F(\cos W) \tag{14}$$
$$H = E(\cos P) - D(\sin P)$$

It can be shown that the angle T in degrees will then be as follows:

$$\begin{aligned} &\text{For } H=0 && T=(\text{Sign of } G)*90 \\ &H>0 && T=\tan^{-1}(G/H) \\ &H<0 && T=180+\tan^{-1}(G/H) \end{aligned} \tag{15}$$

In Eqs. (11), (12) and (15) the phrase "(Sign of ---)" means a 1 having the sign of the variable, and the asterisk (*) means multiply. For example, in Eq. (11), if the sign of B was minus, then the angle P would be -90 deg.

Equations (9), (15), (12) and (11) are the desired equations for the transformation constants H,J,K and T,W,P.

©OPYRIGHT American Society of Mechanical Engineers
Licensed by Information Handling Services

TABLE A-1 AUXILIARY POSITIONS OF REFERENCE DATA

Fitted Results From Four-Point Method				
		Final Position of Measured Data		
Data Pt.	Ball No.	X	Y	Z
1	1	0.000000	0.000000	0.000000
2	2	5.600708	0.000474	−0.000988
3	3	11.200600	0.000527	−0.001652
4	4	16.800598	0.000482	−0.002551
5	5	22.400448	0.000551	−0.002896
6	6	28.000343	0.000189	−0.003915
7	7	0.000559	4.500555	−0.000350
8	8	5.600728	4.500273	−0.001132
9	9	11.200385	4.500594	−0.001587
10	10	16.801040	4.500891	−0.003319
11	11	22.400424	4.500775	−0.003446
12	12	28.000278	4.500646	−0.004442
13	13	0.000587	9.000410	−0.000426
14	14	5.601030	9.000312	−0.001929
15	15	11.200537	9.000529	−0.001744
16	16	16.800419	9.000537	−0.003113
17	17	22.400578	9.000549	−0.004101
18	18	28.000362	9.000716	−0.004480
19	19	0.000554	13.500402	−0.000785
20	20	5.600554	13.500368	−0.001666
21	21	11.200919	13.500350	−0.002820
22	22	16.800657	13.500522	−0.003394
23	23	22.400480	13.500656	−0.004379
24	24	28.000444	13.500540	−0.005229
25	25	0.000721	18.000446	−0.000924
26	26	5.600685	18.000554	−0.001064
27	27	11.200759	18.000634	−0.003092
28	28	16.800526	18.000751	−0.001962
29	29	22.400671	18.000708	−0.004315
30	30	28.000530	18.000757	−0.005486

GENERAL NOTES:
(a) Auxiliary origin at ball No. 1
(b) Auxiliary X axis parallel to balls Nos. 1 and 6
(c) Auxiliary XY plane through ball No. 30

COPYRIGHT American Society of Mechanical Engineers
Licensed by Information Handling Services

TABLE A-2 FINAL POSITION OF REFERENCE DATA

Data Pt.	Ball No.	Final Position of Measured Data X	Y	Z
1	1	0.000000	0.000000	0.000000
2	2	5.600624	0.000489	−0.001025
3	3	11.200449	0.000506	−0.001636
4	4	16.800479	0.000503	−0.002579
5	5	22.400359	0.000535	−0.002903
6	6	28.000323	0.000189	−0.003915
7	7	0.000593	4.500580	−0.000423
8	8	5.600687	4.500270	−0.001206
9	9	11.200337	4.500591	−0.001667
10	10	16.800955	4.500911	−0.003356
11	11	22.400367	4.500764	−0.003466
12	12	28.000284	4.500653	−0.004429
13	13	0.000610	9.000381	−0.000476
14	14	5.600989	9.000293	−0.001988
15	15	11.200480	9.000490	−0.001820
16	16	16.800330	9.000535	−0.003160
17	17	22.400513	9.000514	−0.004136
18	18	28.000368	9.000688	−0.004496
19	19	0.000599	13.500335	−0.000815
20	20	5.600526	13.500352	−0.001726
21	21	11.200882	13.500364	−0.002914
22	22	16.800584	13.500528	−0.003468
23	23	22.400318	13.500582	−0.004245
24	24	28.000448	13.500526	−0.005260
25	25	0.000841	18.000455	−0.001008
26	26	5.600627	18.000614	−0.001243
27	27	11.200725	18.000688	−0.003203
28	28	16.800502	18.000810	−0.001951
29	29	22.400642	18.000703	−0.004325
30	30	28.000562	18.000768	−0.005486

©OPYRIGHT American Society of Mechanical Engineers
Licensed by Information Handling Services

TABLE A-3 LISTING OF X, Y, AND Z DEVIATIONS

Fitted Results From Four-Point Method

		Deviations			
Pt.	Ball No.	X	Y	Z	Total
1	1	0.000000	0.000000	0.000000	0.000000
2	2	0.000083	−0.000015	0.000037	0.000093
3	3	0.000151	0.000021	−0.000016	0.000153
4	4	0.000119	−0.000021	0.000028	0.000124
5	5	0.000089	0.000017	0.000007	0.000091
6	6	0.000020	0.000000	−0.000000	0.000020
7	7	−0.000034	−0.000025	0.000072	0.000084
8	8	0.000041	0.000003	0.000073	0.000084
9	9	0.000048	0.000004	0.000080	0.000094
10	10	0.000085	−0.000020	0.000037	0.000095
11	11	0.000057	0.000011	0.000020	0.000061
12	12	−0.000007	−0.000008	−0.000013	0.000017
13	13	−0.000023	0.000029	0.000050	0.000062
14	14	0.000041	0.000019	0.000060	0.000075
15	15	0.000057	0.000039	0.000077	0.000104
16	16	0.000089	0.000001	0.000047	0.000101
17	17	0.000065	0.000035	0.000035	0.000082
18	18	−0.000006	0.000027	0.000017	0.000032
19	19	−0.000046	0.000066	0.000029	0.000086
20	20	0.000028	0.000015	0.000060	0.000068
21	21	0.000037	−0.000014	0.000094	0.000102
22	22	0.000073	−0.000005	0.000075	0.000105
23	23	0.000163	0.000074	−0.000134	0.000223
24	24	−0.000004	0.000014	0.000031	0.000034
25	25	−0.000121	−0.000009	0.000084	0.000147
26	26	0.000057	−0.000060	0.000179	0.000197
27	27	0.000034	−0.000053	0.000111	0.000128
28	28	0.000024	−0.000060	−0.000011	0.000065
29	29	0.000029	0.000004	0.000010	0.000031
30	30	−0.000032	−0.000011	0.000000	0.000034
STD DEV		0.000059	0.000031	0.000054	0.000051

Trans. Const. for Reference Data (Input to Final)

	X	Y	Z
Origin	0.000000	0.000000	0.000000
Angles	0.004999	−0.008012	−0.000387

COPYRIGHT American Society of Mechanical Engineers
Licensed by Information Handling Services

SECTION B
LEAST SQUARES FIT METHOD OF DATA ANALYSIS

B1 GENERAL

In the least squares fit method, the reference data set is mathematically superimposed onto the CMM data set in such a way that the sum of the squares of the total straight line three-dimensional distances D between corresponding balls will be a minimum. The desired deviations between the two sets of data are then obtained by merely subtracting the coordinates in the XYZ directions of corresponding balls. The total deviations or distances D between corresponding balls are found from

$$D=\sqrt{(X-X')^2+(Y-Y')^2+(Z-Z')^2} \qquad (1)$$

where X,Y,Z are the original coordinates from the CMM data and X′,Y′,Z′ are the coordinates of the final position of the reference data after transformation. (All subscripts have been omitted for clarity.)

Since the transformed set is the reference data and the CMM data are not moved from the original position, the final components of the deviations in the XYZ directions will be in the coordinate system of the CMM as desired.

If Q is designated to be the quantity that is minimized, then from Eq. (1):

$$Q=\Sigma D^2=\Sigma[(X-X')^2+(Y-Y')^2+(Z-Z')^2] \qquad (2)$$

The transformed coordinated X′,Y′,Z′ of the reference data set are calculated from transformation equations of the same form as described in section A:

$$\begin{aligned} X' &= A1\,(U-H)+A2\,(V-J)+A3\,(W-K)\\ Y' &= A4\,(U-H)+A5\,(V-J)+A6\,(W-K)\\ Z' &= A7\,(U-H)+A8\,(V-J)+A9\,(W-K) \end{aligned} \qquad (3)$$

where UVW are the original coordinates (in the XYZ directions, respectively) of the reference data set before transformation and

$$\begin{aligned} A1&=(\cos P)(\cos W)\\ A2&=(\sin P)(\cos W)\\ A3&=-\sin W\\ A4&=(\cos P)(\sin W)(\sin T)-(\sin P)(\cos T)\\ A5&=(\sin P)(\sin W)(\sin T)+(\cos P)(\cos T)\\ A6&=(\cos W)(\sin T)\\ A7&=(\cos P)(\sin W)(\cos T)+(\sin P)(\sin T)\\ A8&=(\sin P)(\sin W)(\cos T)-(\cos P)(\sin T)\\ A9&=(\cos W)(\cos T) \end{aligned} \qquad (4)$$

The six transformation constants H,J,K,T,W,P define the position and angular orientation of a coordinate system into which the reference data set will be transformed. These six constants are to be determined so that the transformed values X′,Y′,Z′ will result in the quantity Q being minimized. This is done in the following manner.

Substituting Eqs. (3) and (4) into Eq. (2) and simplifying gives the complete expression for Q as

$$\begin{aligned} Q=&\Sigma X^2+\Sigma Y^2+\Sigma Z^2+\Sigma U^2+\Sigma V^2+\Sigma W^2\\ &+2\Sigma X[(A1)(H)+(A2)(J)+(A3)(K)]\\ &+2\Sigma Y[(A4)(H)+(A5)(J)+(A6)(K)]\\ &+2\Sigma Z[(A7)(H)+(A8)(J)+(A9)(K)]\\ &-2(A1\Sigma XU+A2\Sigma XV+A3\Sigma XW)\\ &-2(A4\Sigma YU+A5\Sigma YV+A6\Sigma YW)\\ &-2(A7\Sigma ZU+A8\Sigma ZV+A9\Sigma ZW)\\ &-2(H\Sigma U+J\Sigma V+K\Sigma W)\\ &+N(H^2+J^2+K^2) \end{aligned} \qquad (5)$$

where N is the number of balls in each data set.

To minimize Q, the partial derivative of Eq. (5) is taken with respect to each of the six unknown transformation constants H,J,K,T,W,P and set to 0. These six relationships are

$$\begin{aligned} \partial Q/\partial H&=0\\ \partial Q/\partial J&=0\\ \partial Q/\partial K&=0\\ \partial Q/\partial T&=0\\ \partial Q/\partial W&=0\\ \partial Q/\partial P&=0 \end{aligned} \qquad (6)$$

©OPYRIGHT American Society of Mechanical Engineers
Licensed by Information Handling Services

The evaluation of the first three of these reveals they are linear in H,J,K, and therefore can be solved for H,J,K in closed form. The results:

$$\begin{aligned} H &= [(\Sigma U - A1\Sigma X - A4\Sigma Y - A7\Sigma Z)]/N \\ J &= [(\Sigma V - A2\Sigma X - A5\Sigma Y - A8\Sigma Z)]/N \\ K &= [(\Sigma W - A3\Sigma X - A6\Sigma Y - A9\Sigma Z)]/N \end{aligned} \quad (7)$$

Evaluation of the last three equations of Eq. (6) reveals they are nonlinear in T,W,P and therefore cannot be solved in closed form. It can be shown that they will reduce to

$$\begin{aligned} &(S4)\,(A7) + (S5)\,(A8) + (S6)\,(A9) \\ &-(S7)\,(A4) - (S8)\,(A5) - (S9)\,(A6) = 0 \\ &(S1)(B1) + (S2)(B2) + (S3)(B3) \\ &\quad + (S4)(B4) + (S5)(B5) + (S6)(B6) \\ &+ (S7)(B7) + (S8)(B8) + (S9)(B9) = 0 \\ &(S2)(A1) + (S5)(A4) + (S8)(A7) \\ &- (S1)(A2) - (S4)(A5) - (S7)(A8) = 0 \end{aligned} \quad (8)$$

where

$$\begin{aligned} S1 &= (\Sigma X)(\Sigma U) - N(\Sigma XU) \\ S2 &= (\Sigma X)(\Sigma V) - N(\Sigma XV) \\ S3 &= (\Sigma X)(\Sigma W) - N(\Sigma XW) \\ S4 &= (\Sigma Y)(\Sigma U) - N(\Sigma YU) \\ S5 &= (\Sigma Y)(\Sigma V) - N(\Sigma YV) \\ S6 &= (\Sigma Y)(\Sigma W) - N(\Sigma YW) \\ S7 &= (\Sigma Z)(\Sigma U) - N(\Sigma ZU) \\ S8 &= (\Sigma Z)(\Sigma V) - N(\Sigma ZV) \\ S9 &= (\Sigma Z)(\Sigma W) - N(\Sigma ZW) \end{aligned}$$

$$\begin{aligned} B1 &= -(\cos P)(\sin W) \\ B2 &= -(\sin P)(\sin W) \\ B3 &= -(\cos W) \\ B4 &= +(\cos P)(\sin T)(\cos W) \\ B5 &= +(\sin P)(\sin T)(\cos W) \\ B6 &= -(\sin T)(\sin W) \\ B7 &= +(\cos P)(\cos T)(\cos W) \\ B8 &= +(\sin P)(\cos T)(\cos W) \\ B9 &= -(\cos T)(\sin W) \end{aligned}$$

Since equations in Eq. (8) are nonlinear, an iterative method such as Brown's must be used, and T,W,P can be obtained only in numerical form.

COPYRIGHT American Society of Mechanical Engineers
Licensed by Information Handling Services

TABLE B-1 FINAL POSITION OF REFERENCE DATA

Fitted Results From Least Squares Fit Method				
		Final Position of Measured Data		
Data Pt.	Ball No.	X	Y	Z
1	1	0.000048	−0.000014	0.000058
2	2	5.600672	0.000482	−0.000982
3	3	11.200497	0.000505	−0.001608
4	4	16.800526	0.000509	−0.002565
5	5	22.400406	0.000547	−0.002904
6	6	28.000371	0.000208	−0.003932
7	7	0.000636	4.500567	−0.000356
8	8	5.600730	4.500263	−0.001154
9	9	11.200380	4.500590	−0.001630
10	10	16.800998	4.500916	−0.003334
11	11	22.400410	4.500777	−0.003459
12	12	28.000327	4.500673	−0.004437
13	13	0.000647	9.000368	−0.000401
14	14	5.601026	9.000286	−0.001928
15	15	11.200518	9.000489	−0.001775
16	16	16.800367	9.000541	−0.003129
17	17	22.400550	9.000527	−0.004120
18	18	28.000405	9.000707	−0.004495
19	19	0.000631	13.500322	−0.000731
20	20	5.600558	13.500345	−0.001657
21	21	11.200914	13.500364	−0.002860
22	22	16.800616	13.500533	−0.003429
23	23	22.400350	13.500595	−0.004221
24	24	28.000480	13.500545	−0.005251
25	25	0.000868	18.000441	−0.000916
26	26	5.600654	18.000606	−0.001165
27	27	11.200752	18.000687	−0.003140
28	28	16.800529	18.000816	−0.001903
29	29	22.400669	18.000716	−0.004292
30	30	28.000589	18.000787	−0.005468

©COPYRIGHT American Society of Mechanical Engineers
Licensed by Information Handling Services

TABLE B-2 FINAL POSITION OF MEASURED DATA

Fitted Results From Least Squares Fit Method

		Final Position of Measured Data		
Data Pt.	Ball No.	X	Y	Z
1	1	0.000000	0.000000	0.000000
2	2	5.600708	0.000474	– 0.000988
3	3	11.200600	0.000527	– 0.001652
4	4	16.800598	0.000482	– 0.002551
5	5	22.400448	0.000551	– 0.002896
6	6	28.000343	0.000189	– 0.003915
7	7	0.000559	4.500555	– 0.000350
8	8	5.600728	4.500273	– 0.001132
9	9	11.200385	4.500594	– 0.001587
10	10	16.801040	4.500891	– 0.003319
11	11	22.400424	4.500775	– 0.003446
12	12	28.000278	4.500646	– 0.004442
13	13	0.000587	9.000410	– 0.000426
14	14	5.601030	9.000312	– 0.001929
15	15	11.200537	9.000529	– 0.001744
16	16	16.800419	9.000537	– 0.003113
17	17	22.400578	9.000549	– 0.004101
18	18	28.000362	9.000716	– 0.004480
19	19	0.000554	13.500402	– 0.000785
20	20	5.600554	13.500368	– 0.001666
21	21	11.200919	13.500350	– 0.002820
22	22	16.800657	13.500522	– 0.003394
23	23	22.400480	13.500656	– 0.004379
24	24	28.000444	13.500540	– 0.005229
25	25	0.000721	18.000446	– 0.000924
26	26	5.600685	18.000554	– 0.001064
27	27	11.200759	18.000634	– 0.003092
28	28	16.800526	18.000751	– 0.001962
29	29	22.400671	18.000708	– 0.004315
30	30	28.000530	18.000757	– 0.005486

COPYRIGHT American Society of Mechanical Engineers
Licensed by Information Handling Services

TABLE B-3 LISTING OF X, Y, AND Z DEVIATIONS

Fitted Results From Least Squares Fit Method

Pt.	Ball No.	Deviations X	Y	Z	Total
1	1	−0.000048	0.000014	−0.000058	0.000076
2	2	0.000036	−0.000008	−0.000006	0.000037
3	3	0.000103	0.000022	−0.000044	0.000114
4	4	0.000071	−0.000027	0.000014	0.000077
5	5	0.000041	0.000004	0.000008	0.000042
6	6	−0.000028	−0.000019	0.000016	0.000038
7	7	−0.000077	−0.000012	0.000006	0.000078
8	8	−0.000002	0.000010	0.000022	0.000024
9	9	0.000006	0.000005	0.000044	0.000044
10	10	0.000043	−0.000026	0.000015	0.000052
11	11	0.000014	−0.000002	0.000013	0.000020
12	12	−0.000049	−0.000027	−0.000006	0.000056
13	13	−0.000060	0.000042	−0.000025	0.000078
14	14	0.000004	0.000026	−0.000000	0.000027
15	15	0.000020	0.000040	0.000032	0.000055
16	16	0.000052	−0.000004	0.000016	0.000055
17	17	0.000028	0.000022	0.000019	0.000041
18	18	−0.000043	0.000008	0.000016	0.000046
19	19	−0.000078	0.000080	−0.000054	0.000124
20	20	−0.000004	0.000023	−0.000009	0.000025
21	21	0.000005	−0.000013	0.000040	0.000042
22	22	0.000041	−0.000011	0.000035	0.000056
23	23	0.000131	0.000062	−0.000158	0.000214
24	24	−0.000036	−0.000005	0.000021	0.000042
25	25	−0.000147	0.000005	−0.000008	0.000148
26	26	0.000031	−0.000053	0.000101	0.000118
27	27	0.000007	−0.000053	0.000049	0.000072
28	28	−0.000003	−0.000065	−0.000059	0.000088
29	29	0.000002	−0.000008	−0.000023	0.000025
30	30	−0.000059	−0.000030	−0.000018	0.000068
STD DEV		0.000057	0.000032	0.000045	0.000043

Trans. Const. for Reference Data (Input to Final)

	X	Y	Z
Origin	−0.000048	0.000014	0.000058
Angles	0.004889	−0.008163	−0.000454

COPYRIGHT American Society of Mechanical Engineers
Licensed by Information Handling Services

SECTION C
POINT-TO-POINT METHOD OF DATA ANALYSIS

C1 GENERAL

In the point-to-point method, one of the balls is selected as the primary ball, and the straight line, three-dimensional distances are calculated from this ball to all other balls in the set. This is done for both the reference data set and the CMM data set using the same ball for the primary in both sets. If these distances are denoted by DR and DC for the reference and CMM data sets, respectively, then

$$DR2 = \sqrt{(XR2-XR1)^2+(YR2-YR1)^2+(ZR2-ZR1)^2} \quad (1)$$

and

$$DC2 = \sqrt{(XC2-XC1)^2+(YC2-YC1)^2+(ZC2-ZC1)^2} \quad (2)$$

where the number 1 refers to the primary ball and the number 2 refers to any one of the other N balls in the set. The desired deviations between the two sets of data are merely the arithmetic difference between these two distances, or

$$DEV = DR - DC \quad (3)$$

where the subscripts have been omitted for clarity. These deviations will lie in the direction of the line connecting the primary ball and the other ball in question so that each will lie in a different direction in space.

It is worth noting that Eq. (3) together with Eqs. (1) and (2) will result from a coordinate transformation analogous to that in the four-point method if the plate is viewed as containing only two balls. This is accomplished in the following manner.

As in the four-point method, an auxiliary coordinate system will be established in each data set, but since there are only two balls in each set, the coordinate system in this case will consist of only one axis and an origin. The origin will be specified to be at the primary ball, and the axis, which will be arbitrarily labeled the X axis, will be specified to be the line connecting the primary and the other ball.

Because there is only one axis involved, the transformation Eqs. (6) and (7) in Section A reduce to

$$X' = A1\,(X-H) + A2\,(Y-J) + A3\,(Z-K) \quad (4)$$

where H,J,K are the original coordinates of the primary ball; X,Y,Z are the original coordinates of any ball to be transformed; X′ is the distance along the auxiliary X axis from the primary ball to the transformed ball; and

$$\begin{aligned} A1 &= (\cos P)(\cos W) \\ A2 &= (\sin P)(\cos W) \\ A3 &= -\sin W \end{aligned} \quad (5)$$

In Eq. (5), the angle T is missing as it should be because it is indeterminant since only the auxiliary X axis in this case can be uniquely positioned in space. This positioning of the auxiliary X axis is specified by the angles W and P.

By definition, the equations for H,J,K are

$$\begin{aligned} H &= X1 \\ J &= Y1 \\ K &= Z1 \end{aligned} \quad (6)$$

where X1,Y1,Z1 are the original coordinates of the primary ball. The relationships for angles P and W are given by Eqs. (3) and (6) in Section A:

$$P = \tan^{-1}[(Y2-Y1)/(X2-X1)] \quad (7)$$

$$W = \tan^{-1}[(Z1-Z2)/[(Y2-Y1)\sin P + (X2-X1)\cos P] \quad (8)$$

where X2,Y2,Z2 are the original coordinates of the other ball in the set. It follows from Eqs. (7) and (8) that

$$\begin{aligned} \sin P &= (Y2-Y1)/G \\ \cos P &= (X2-X1)/G \\ \sin W &= (Z1-Z2)/H \\ \cos W &= G/H \end{aligned} \quad (9)$$

COPYRIGHT American Society of Mechanical Engineers
Licensed by Information Handling Services

where

$$G=\sqrt{(X2-X1)^2+(Y2-Y1)^2} \text{ and} \quad (10)$$

$$H=\sqrt{(X2-X1)^2+(Y2-Y1)^2+(Z2-Z1)^2} \quad (11)$$

Substituting Eq. (9) into Eq. (5) gives

$$\begin{aligned} A1&=(X2-X1)/H \\ A2&=(Y2-Y1)/H \\ A3&=(Z2-Z1)/H \end{aligned} \quad (12)$$

When Eqs. (6) and (12) are substituted into equation (4), the final expression for the lone transformation equation becomes

$$\begin{aligned} X'=[&(X2-X1)(X-X1)+(Y2-Y1)(Y-Y1) \\ &+(Z2-Z1)(Z-Z1)]/H \end{aligned} \quad (13)$$

Since the individual XYZ components of the deviations in Eq. (3) are not required, it is sufficient to only transform the data from each set into the auxiliary coordinate system and not try to put the final results into a particular coordinate system (the end result would be the same anyway, but the added complexity is unnecessary at this point). If the transformation in Eq. (13) is carried out for both balls in the set, there results

For ball No. 1: $X'=O$
For ball No. 2: $X'=H$

The distance D between the two balls is therefore H, which from Eq. (11) becomes

$$D=\sqrt{(X2-X1)^2+(Y2-Y1)^2+(Z2-Z1)^2} \quad (14)$$

This result applies to both data sets, and since it is of the same form as Eqs. (1) and (2), it shows that the point-to-point method is analogous to the four-point method when the ball plate is viewed as containing only two balls.

©OPYRIGHT American Society of Mechanical Engineers
Licensed by Information Handling Services

Space Plate Deviations
(5 Rows x 6 Columns)

Ball spacing is 10 units in both directions
Inserted error is .000400 units/ball; max. = .002000 units

Linear errors are along each: Row
Axis direction: X

Plate is tilted 0 deg. about the Y axis

Auxiliary origin at ball No. 1
Auxiliary X axis parallel to balls Nos. 1 and 6
Auxiliary XY plane through ball No. 30

Ball No.	X Deviations			Y Deviations			Z Deviations		
	– max.	0	max.	– max.	0	max.	– max.	0	max.
1		X			Y			Z	
2		X			Y			Z	
3		X			Y			Z	
4		X			Y			Z	
5		X			Y			Z	
6		X			Y			Z	
7		X			Y			Z	
8		X			Y			Z	
9		X			Y			Z	
10		X			Y			Z	
11		X			Y			Z	
12		X			Y			Z	
13		X			Y			Z	
14		X			Y			Z	
15		X			Y			Z	
16		X			Y			Z	
17		X			Y			Z	
18		X			Y			Z	
19		X			Y			Z	
20		X			Y			Z	
21		X			Y			Z	
22		X			Y			Z	
23		X			Y			Z	
24		X			Y			Z	
25		X			Y			Z	
26		X			Y			Z	
27		X			Y			Z	
28		X			Y			Z	
29		X			Y			Z	
30		X			Y			Z	

Profile 1. X-axis point-to-point positioning error with ball plate in horizontal position.

FIG. C-1 PROFILES OF SPACE PLATE DEVIATIONS

COPYRIGHT American Society of Mechanical Engineers
Licensed by Information Handling Services

SPACE PLATE TEST RECOMMENDATIONS
FOR COORDINATE MEASURING MACHINES

Space Plate Deviations
(5 Rows x 6 Columns)

Ball spacing is 10 units in both directions
Inserted error is .000400 units/ball; max. = .002000 units

Linear errors are along each: Row
Axis direction: X

Plate is tilted 30 deg. about the Y axis

Auxiliary origin at ball No. 1
Auxiliary X axis parallel to balls Nos. 1 and 6
Auxiliary XY plane through ball No. 30

Ball No.	X Deviations			Y Deviations			Z Deviations		
	– max.	0	max.	– max.	0	max.	– max.	0	max.
1		X			Y			Z	
2		X			Y			Z	
3		X			Y			Z	
4		X			Y			Z	
5		X			Y			Z	
6		X			Y			Z	
7		X			Y			Z	
8		X			Y			Z	
9		X			Y			Z	
10		X			Y			Z	
11		X			Y			Z	
12		X			Y			Z	
13		X			Y			Z	
14		X			Y			Z	
15		X			Y			Z	
16		X			Y			Z	
17		X			Y			Z	
18		X			Y			Z	
19		X			Y			Z	
20		X			Y			Z	
21		X			Y			Z	
22		X			Y			Z	
23		X			Y			Z	
24		X			Y			Z	
25		X			Y			Z	
26		X			Y			Z	
27		X			Y			Z	
28		X			Y			Z	
29		X			Y			Z	
30		X			Y			Z	

Profile 2. X-axis point-to-point positioning error with ball plate tilted 30 deg. about the Y-axis.

FIG. C-1 PROFILES OF SPACE PLATE DEVIATIONS (CONT'D)

COPYRIGHT American Society of Mechanical Engineers
Licensed by Information Handling Services

Space Plate Deviations
(5 Rows x 6 Columns)

Ball spacing is 10 units in both directions
Inserted error is .000400 units/ball; max. = .002000 units

Linear errors are along each:	Axis direction:
Column	Y

Plate is tilted 0 deg. about the Y axis

Auxiliary origin at ball No. 1
Auxiliary X axis parallel to balls Nos. 1 and 6
Auxiliary XY plane through ball No. 30

Ball No.	X Deviations			Y Deviations			Z Deviations		
	– max.	0	max.	– max.	0	max.	– max.	0	max.
1		X			Y			Z	
2		X			Y			Z	
3		X			Y			Z	
4		X			Y			Z	
5		X			Y			Z	
6		X			Y			Z	
7		X			Y			Z	
8		X			Y			Z	
9		X			Y			Z	
10		X			Y			Z	
11		X			Y			Z	
12		X			Y			Z	
13		X			Y			Z	
14		X			Y			Z	
15		X			Y			Z	
16		X			Y			Z	
17		X			Y			Z	
18		X			Y			Z	
19		X			Y			Z	
20		X			Y			Z	
21		X			Y			Z	
22		X			Y			Z	
23		X			Y			Z	
24		X			Y			Z	
25		X			Y			Z	
26		X			Y			Z	
27		X			Y			Z	
28		X			Y			Z	
29		X			Y			Z	
30		X			Y			Z	

Profile 3. Y-axis point-to-point positioning error with ball plate in horizontal position.

FIG. C-1 PROFILES OF SPACE PLATE DEVIATIONS (CONT'D)

COPYRIGHT American Society of Mechanical Engineers
Licensed by Information Handling Services

SPACE PLATE TEST RECOMMENDATIONS
FOR COORDINATE MEASURING MACHINES

Space Plate Deviations
(5 Rows x 6 Columns)

Ball spacing is 10 units in both directions
Inserted error is .000400 units/ball; max. = .002000 units

Linear errors are along each: Column
Axis direction: Y

Plate is tilted 30 deg. about the Y axis

Auxiliary origin at ball No. 1
Auxiliary X axis parallel to balls Nos. 1 and 6
Auxiliary XY plane through ball No. 30

Ball No.	X Deviations			Y Deviations			Z Deviations		
	– max.	0	max.	– max.	0	max.	– max.	0	max.
1		X			Y			Z	
2		X			Y			Z	
3		X			Y			Z	
4		X			Y			Z	
5		X			Y			Z	
6		X			Y			Z	
7		X			Y			Z	
8		X			Y			Z	
9		X			Y			Z	
10		X			Y			Z	
11		X			Y			Z	
12		X			Y			Z	
13		X			Y			Z	
14		X			Y			Z	
15		X			Y			Z	
16		X			Y			Z	
17		X			Y			Z	
18		X			Y			Z	
19		X			Y			Z	
20		X			Y			Z	
21		X			Y			Z	
22		X			Y			Z	
23		X			Y			Z	
24		X			Y			Z	
25		X			Y			Z	
26		X			Y			Z	
27		X			Y			Z	
28		X			Y			Z	
29		X			Y			Z	
30		X			Y			Z	

Profile 4. Y-axis point-to-point positioning error with ball plate tilted 30 deg. about the Y-axis.

FIG. C-1 PROFILES OF SPACE PLATE DEVIATIONS (CONT'D)

©OPYRIGHT American Society of Mechanical Engineers
Licensed by Information Handling Services

Space Plate Deviations
(5 Rows x 6 Columns)

Ball spacing is 10 units in both directions
Inserted error is .000400 units/ball; max. = .002000 units

Linear errors are along each: Column
Axis direction: X

Plate is tilted 0 deg. about the Y axis

Auxiliary origin at ball No. 1
Auxiliary X axis parallel to balls Nos. 1 and 6
Auxiliary XY plane through ball No. 30

Ball No.	X Deviations			Y Deviations			Z Deviations		
	– max.	0	max.	– max.	0	max.	– max.	0	max.
1		X			Y			Z	
2		X			Y			Z	
3		X			Y			Z	
4		X			Y			Z	
5		X			Y			Z	
6		X			Y			Z	
7		X			Y			Z	
8		X			Y			Z	
9		X			Y			Z	
10		X			Y			Z	
11		X			Y			Z	
12		X			Y			Z	
13		X			Y			Z	
14		X			Y			Z	
15		X			Y			Z	
16		X			Y			Z	
17		X			Y			Z	
18		X			Y			Z	
19		X			Y			Z	
20		X			Y			Z	
21		X			Y			Z	
22		X			Y			Z	
23		X			Y			Z	
24		X			Y			Z	
25			X		Y			Z	
26			X		Y			Z	
27			X		Y			Z	
28			X		Y			Z	
29			X		Y			Z	
30			X		Y			Z	

Profile 5. X-Y axis out-of-squareness error with ball plate in horizontal position.

FIG. C-1 PROFILES OF SPACE PLATE DEVIATIONS (CONT'D)

COPYRIGHT American Society of Mechanical Engineers
Licensed by Information Handling Services

SPACE PLATE TEST RECOMMENDATIONS
FOR COORDINATE MEASURING MACHINES

Space Plate Deviations
(5 Rows x 6 Columns)

Ball spacing is 10 units in both directions
Inserted error is .000400 units/ball; max. = .002000 units

Linear errors are along each: Column
Axis direction: X

Plate is tilted 30 deg. about the Y axis

Auxiliary origin at ball No. 1
Auxiliary X axis parallel to balls Nos. 1 and 6
Auxiliary XY plane through ball No. 30

Ball No.	X Deviations			Y Deviations			Z Deviations		
	– max.	0	max.	– max.	0	max.	– max.	0	max.
1		X			Y			Z	
2		X			Y			Z	
3		X			Y			Z	
4		X			Y			Z	
5		X			Y			Z	
6		X			Y			Z	
7		X			Y			Z	
8		X			Y			Z	
9		X			Y			Z	
10		X			Y			Z	
11		X			Y			Z	
12		X			Y			Z	
13		X			Y			Z	
14		X			Y			Z	
15		X			Y			Z	
16		X			Y			Z	
17		X			Y			Z	
18		X			Y			Z	
19		X			Y			Z	
20		X			Y			Z	
21		X			Y			Z	
22		X			Y			Z	
23		X			Y			Z	
24		X			Y			Z	
25		X			Y			Z	
26		X			Y			Z	
27		X			Y			Z	
28		X			Y			Z	
29		X			Y			Z	
30		X			Y			Z	

Profile 6. X-Y axis out-of-squareness error with ball plate tilted 30 deg. about the Y-axis.

FIG. C-1 PROFILES OF SPACE PLATE DEVIATIONS (CONT'D)

COPYRIGHT American Society of Mechanical Engineers
Licensed by Information Handling Services

Space Plate Deviations
(5 Rows x 6 Columns)

Ball spacing is 10 units in both directions
Inserted error is .000400 units/ball; max.= .002000 units

Linear errors are along each:	Axis direction:
Row	X
Column	Y

Plate is tilted 0 deg. about the Y axis

Auxiliary origin at ball No. 1
Auxiliary X axis parallel to balls Nos. 1 and 6
Auxiliary XY plane through ball No. 30

Ball No.	X Deviations			Y Deviations			Z Deviations		
	– max.	0	max.	– max.	0	max.	– max.	0	max.
1		X			Y			Z	
2		X			Y			Z	
3		X			Y			Z	
4		X			Y			Z	
5		X			Y			Z	
6		X			Y			Z	
7		X			Y			Z	
8		X			Y			Z	
9		X			Y			Z	
10		X			Y			Z	
11		X			Y			Z	
12		X			Y			Z	
13		X			Y			Z	
14		X			Y			Z	
15		X			Y			Z	
16		X			Y			Z	
17		X			Y			Z	
18		X			Y			Z	
19		X			Y			Z	
20		X			Y			Z	
21		X			Y			Z	
22		X			Y			Z	
23		X			Y			Z	
24		X			Y			Z	
25		X			Y			Z	
26		X			Y			Z	
27		X			Y			Z	
28		X			Y			Z	
29		X			Y			Z	
30		X			Y			Z	

Profile 7. X-axis and Y-axis point-to-point positioning error with ball plate in horizontal position.

FIG. C-1 PROFILES OF SPACE PLATE DEVIATIONS (CONT'D)

COPYRIGHT American Society of Mechanical Engineers
Licensed by Information Handling Services

SPACE PLATE TEST RECOMMENDATIONS
FOR COORDINATE MEASURING MACHINES

Space Plate Deviations
(5 Rows x 6 Columns)

Ball spacing is 10 units in both directions
Inserted error is .000400 units/ball; max.= .002000 units

Linear errors are along each:	Axis direction:
Row	X
Column	Y

Plate is tilted 30 deg. about the Y axis

Auxiliary origin at ball No. 1
Auxiliary X axis parallel to balls Nos. 1 and 6
Auxiliary XY plane through ball No. 30

Ball No.	X Deviations			Y Deviations			Z Deviations		
	– max.	0	max.	– max.	0	max.	– max.	0	max.
1		X			Y			Z	
2		X			Y			Z	
3		X			Y			Z	
4		X			Y			Z	
5		X			Y			Z	
6		X			Y			Z	
7		X			Y			Z	
8		X			Y			Z	
9		X			Y			Z	
10		X			Y			Z	
11		X			Y			Z	
12		X			Y			Z	
13		X			Y			Z	
14		X			Y			Z	
15		X			Y			Z	
16		X			Y			Z	
17		X			Y			Z	
18		X			Y			Z	
19		X			Y			Z	
20		X			Y			Z	
21		X			Y			Z	
22		X			Y			Z	
23		X			Y			Z	
24		X			Y			Z	
25		X			Y			Z	
26		X			Y			Z	
27		X			Y			Z	
28		X			Y			Z	
29		X			Y			Z	
30		X			Y			Z	

Profile 8. X-axis and Y-axis point-to-point positioning error with ball plate tilted 30 deg. about the Y-axis.

FIG. C-1 PROFILES OF SPACE PLATE DEVIATIONS (CONT'D)

COPYRIGHT American Society of Mechanical Engineers
Licensed by Information Handling Services

Space Plate Deviations
(5 Rows x 6 Columns)

Ball spacing is 10 units in both directions
Inserted error is .000400 units/ball; max. = .002000 units

Linear errors are along each:	Axis direction:
Column	X
Column	Y

Plate is tilted 0 deg. about the Y axis

Auxiliary origin at ball No. 1
Auxiliary X axis parallel to balls Nos. 1 and 6
Auxiliary XY plane through ball No. 30

Ball No.	X Deviations			Y Deviations			Z Deviations		
	– max.	0	max.	– max.	0	max.	– max.	0	max.
1		X			Y			Z	
2		X			Y			Z	
3		X			Y			Z	
4		X			Y			Z	
5		X			Y			Z	
6		X			Y			Z	
7		X			Y			Z	
8		X			Y			Z	
9		X			Y			Z	
10		X			Y			Z	
11		X			Y			Z	
12		X			Y			Z	
13		X			Y			Z	
14		X			Y			Z	
15		X			Y			Z	
16		X			Y			Z	
17		X			Y			Z	
18		X			Y			Z	
19		X			Y			Z	
20		X			Y			Z	
21		X			Y			Z	
22		X			Y			Z	
23		X			Y			Z	
24		X			Y			Z	
25		X			Y			Z	
26		X			Y			Z	
27		X			Y			Z	
28		X			Y			Z	
29		X			Y			Z	
30		X			Y			Z	

Profile 9. X-Y axis out-of-squareness error and Y-axis point-to-point positioning error with ball plate in horizontal position.

FIG. C-1 PROFILES OF SPACE PLATE DEVIATIONS (CONT'D)

COPYRIGHT American Society of Mechanical Engineers
Licensed by Information Handling Services

SPACE PLATE TEST RECOMMENDATIONS
FOR COORDINATE MEASURING MACHINES

Space Plate Deviations
(5 Rows x 6 Columns)

Ball spacing is 10 units in both directions
Inserted error is .000400 units/ball; max.= .002000 units

Linear errors are along each:	Axis direction:
Column	X
Column	Y

Plate is tilted 30 deg. about the Y axis

Auxiliary origin at ball No. 1
Auxiliary X axis parallel to balls Nos. 1 and 6
Auxiliary XY plane through ball No. 30

Ball No.	X Deviations			Y Deviations			Z Deviations		
	– max.	0	max.	– max.	0	max.	– max.	0	max.
1		X			Y			Z	
2		X			Y			Z	
3		X			Y			Z	
4		X			Y			Z	
5		X			Y			Z	
6		X			Y			Z	
7		X			Y			Z	
8		X			Y			Z	
9		X			Y			Z	
10		X			Y			Z	
11		X			Y			Z	
12		X			Y			Z	
13		X			Y			Z	
14		X			Y			Z	
15		X			Y			Z	
16		X			Y			Z	
17		X			Y			Z	
18		X			Y			Z	
19		X			Y			Z	
20		X			Y			Z	
21		X			Y			Z	
22		X			Y			Z	
23		X			Y			Z	
24		X			Y			Z	
25		X			Y			Z	
26		X			Y			Z	
27		X			Y			Z	
28		X			Y			Z	
29		X			Y			Z	
30		X			Y			Z	

Profile 10. X-Y axis out-of-squareness error and Y-axis point-to-point positioning error with ball plate tilted 30 deg. about the Y-axis.

FIG. C-1 PROFILES OF SPACE PLATE DEVIATIONS (CONT'D)

COPYRIGHT American Society of Mechanical Engineers
Licensed by Information Handling Services

Space Plate Deviations
(5 Rows x 6 Columns)

Ball spacing is 10 units in both directions
Inserted error is .000400 units/ball; max. = .002000 units

Linear errors are along each:	Axis direction:
Row	X
Column	X

Plate is tilted 0 deg. about the Y axis

Auxiliary origin at ball No. 1
Auxiliary X axis parallel to balls Nos. 1 and 6
Auxiliary XY plane through ball No. 30

Ball No.	X Deviations			Y Deviations			Z Deviations		
	– max.	0	max.	– max.	0	max.	– max.	0	max.
1		X			Y			Z	
2		X			Y			Z	
3		X			Y			Z	
4		X			Y			Z	
5		X			Y			Z	
6		X			Y			Z	
7		X			Y			Z	
8		X			Y			Z	
9		X			Y			Z	
10		X			Y			Z	
11		X			Y			Z	
12		X			Y			Z	
13		X			Y			Z	
14		X			Y			Z	
15		X			Y			Z	
16		X			Y			Z	
17		X			Y			Z	
18		X			Y			Z	
19		X			Y			Z	
20		X			Y			Z	
21		X			Y			Z	
22		X			Y			Z	
23		X			Y			Z	
24		X			Y			Z	
25		X			Y			Z	
26		X			Y			Z	
27		X			Y			Z	
28		X			Y			Z	
29		X			Y			Z	
30		X			Y			Z	

Profile 11. X-axis point-to-point positioning error and X-Y axis out-of-squareness error with ball plate in horizontal position.

FIG. C-1 PROFILES OF SPACE PLATE DEVIATIONS (CONT'D)

COPYRIGHT American Society of Mechanical Engineers
Licensed by Information Handling Services

SPACE PLATE TEST RECOMMENDATIONS
FOR COORDINATE MEASURING MACHINES

Space Plate Deviations
(5 Rows x 6 Columns)

Ball spacing is 10 units in both directions
Inserted error is .000400 units/ball; max. = .002000 units

Linear errors are along each:	Axis direction:
Row	X
Column	X

Plate is tilted 30 deg. about the Y axis

Auxiliary origin at ball No. 1
Auxiliary X axis parallel to balls Nos. 1 and 6
Auxiliary XY plane through ball No. 30

Ball No.	X Deviations			Y Deviations			Z Deviations		
	– max.	0	max.	– max.	0	max.	– max.	0	max.
1		X			Y			Z	
2		X			Y			Z	
3		X			Y			Z	
4		X			Y			Z	
5		X			Y			Z	
6		X			Y			Z	
7		X			Y			Z	
8		X			Y			Z	
9		X			Y			Z	
10		X			Y			Z	
11		X			Y			Z	
12		X			Y			Z	
13		X			Y			Z	
14		X			Y			Z	
15		X			Y			Z	
16		X			Y			Z	
17		X			Y			Z	
18		X			Y			Z	
19		X			Y			Z	
20		X			Y			Z	
21		X			Y			Z	
22		X			Y			Z	
23		X			Y			Z	
24		X			Y			Z	
25		X			Y			Z	
26		X			Y			Z	
27		X			Y			Z	
28		X			Y			Z	
29		X			Y			Z	
30		X			Y			Z	

Profile 12. X-axis point-to-point positioning error and X-Y axis out-of-squareness error ball plate tilted 30 degrees about the Y-axis.

FIG. C-1 PROFILES OF SPACE PLATE DEVIATIONS (CONT'D)

COPYRIGHT American Society of Mechanical Engineers
Licensed by Information Handling Services

Space Plate Deviations
(5 Rows x 6 Columns)

Ball spacing is 10 units in both directions
Inserted error is .000400 units/ball; max. = .002000 units

Linear errors are along each:	Axis direction:
Row	X
Column	X
Column	Y

Plate is tilted 0 deg. about the Y axis

Auxiliary origin at ball No. 1
Auxiliary X axis parallel to balls Nos. 1 and 6
Auxiliary XY plane through ball No. 30

Ball No.	X Deviations			Y Deviations			Z Deviations		
	– max.	0	max.	– max.	0	max.	– max.	0	max.
1		X			Y			Z	
2		X			Y			Z	
3		X			Y			Z	
4		X			Y			Z	
5		X			Y			Z	
6		X			Y			Z	
7		X			Y			Z	
8		X			Y			Z	
9		X			Y			Z	
10		X			Y			Z	
11		X			Y			Z	
12		X			Y			Z	
13		X			Y			Z	
14		X			Y			Z	
15		X			Y			Z	
16		X			Y			Z	
17		X			Y			Z	
18		X			Y			Z	
19		X			Y			Z	
20		X			Y			Z	
21		X			Y			Z	
22		X			Y			Z	
23		X			Y			Z	
24		X			Y			Z	
25		X			Y			Z	
26		X			Y			Z	
27		X			Y			Z	
28		X			Y			Z	
29		X			Y			Z	
30		X			Y			Z	

Profile 13. X-axis and Y-axis point-to-point positioning error and X-Y axis out-of-squareness error with ball plate in horizontal position.

FIG. C-1 PROFILES OF SPACE PLATE DEVIATIONS (CONT'D)

COPYRIGHT American Society of Mechanical Engineers
Licensed by Information Handling Services

SPACE PLATE TEST RECOMMENDATIONS
FOR COORDINATE MEASURING MACHINES

Space Plate Deviations
(5 Rows x 6 Columns)

Ball spacing is 10 units in both directions
Inserted error is .000400 units/ball; max. = .002000 units

Linear errors are along each:	Axis direction:
Row	X
Column	X
Column	Y

Plate is tilted 30 deg. about the Y axis

Auxiliary origin at ball No. 1
Auxiliary X axis parallel to balls Nos. 1 and 6
Auxiliary XY plane through ball No. 30

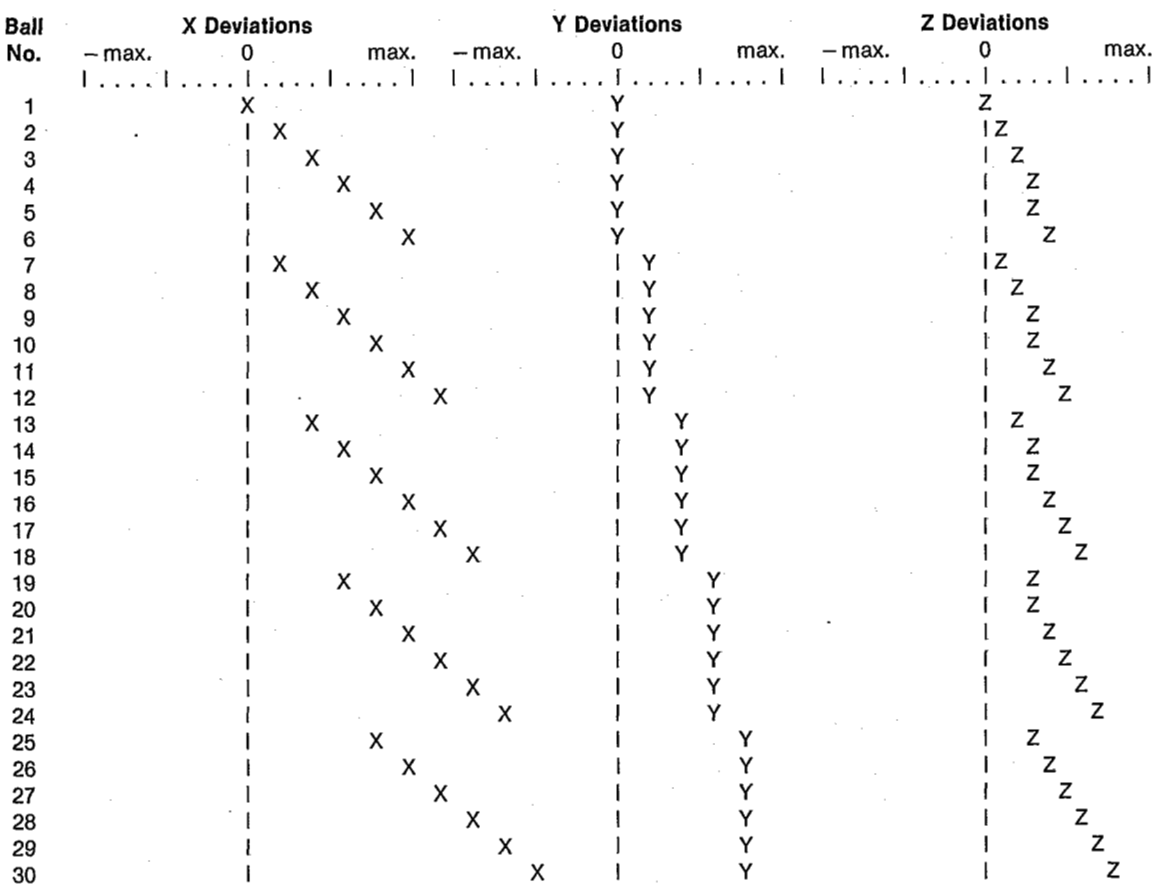

Profile 14. X-axis and Y-axis point-to-point positioning error and X-Y axis out-of-squareness error with ball plate tilted 30 deg. about the Y-axis.

FIG. C-1 PROFILES OF SPACE PLATE DEVIATIONS (CONT'D)

COPYRIGHT American Society of Mechanical Engineers
Licensed by Information Handling Services

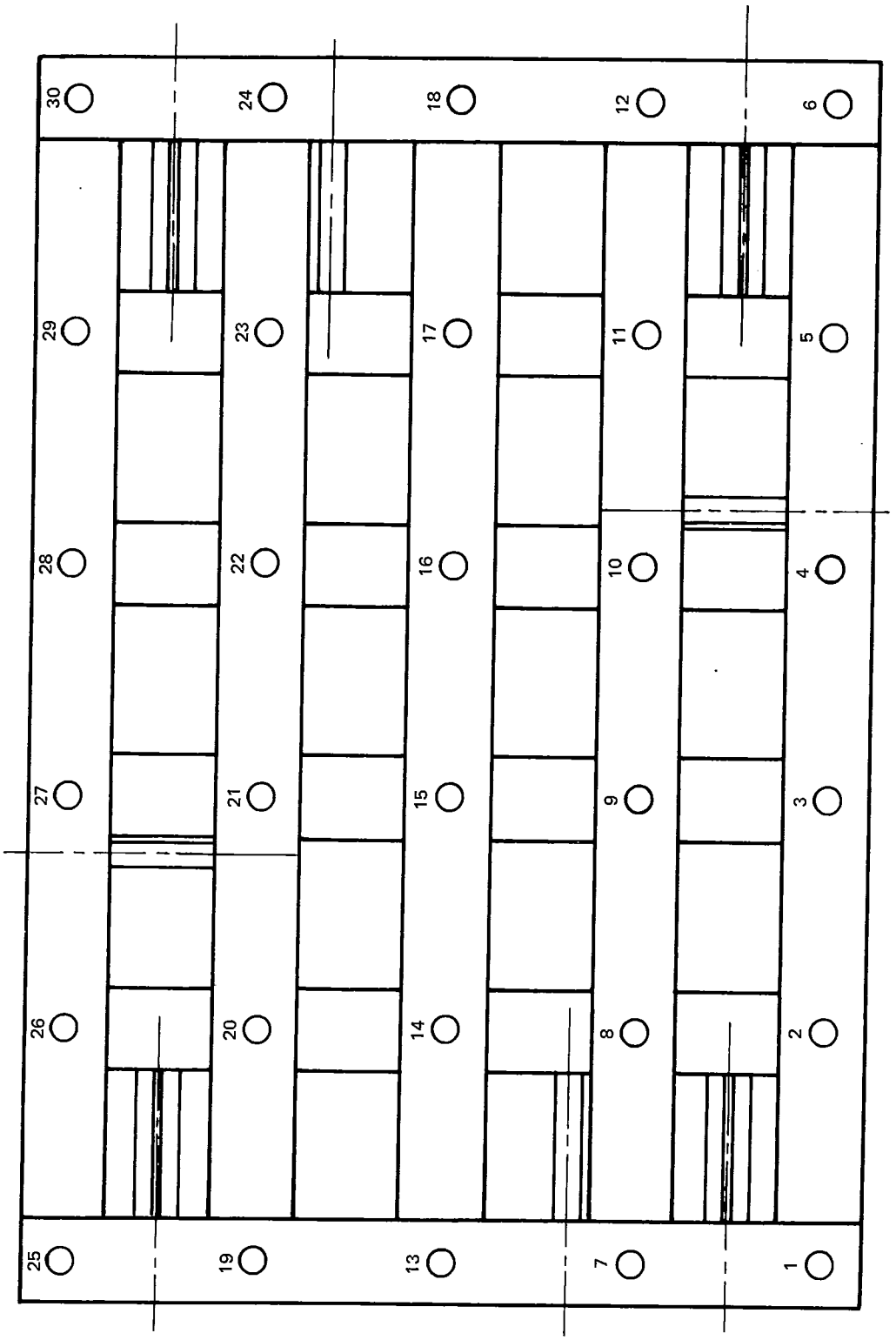

FIG. C-2 LAYOUT OF BALLS ON SPACE PLATE

COPYRIGHT American Society of Mechanical Engineers
Licensed by Information Handling Services

TABLE C-1 DISTANCES FROM BALL 1

Distances From Ball No. 1				
Data Pt.	**Ball No.**	**Meas. Dist.**	**Ref. Dist.**	**Dev.**
1	1	0.000000	0.000000	0.000000
2	2	5.600708	5.600624	−0.000083
3	3	11.200600	11.200449	−0.000151
4	4	16.800598	16.800479	−0.000119
5	5	22.400448	22.400359	−0.000089
6	6	28.000343	28.000323	−0.000020
7	7	4.500555	4.500581	0.000025
8	8	7.184748	7.184715	−0.000033
9	9	12.070790	12.070744	−0.000046
10	10	17.393475	17.393398	−0.000077
11	11	22.848107	22.848049	−0.000058
12	12	28.359679	28.359687	0.000008
13	13	9.000410	9.000382	−0.000028
14	14	10.600810	10.600772	−0.000038
15	15	14.368770	14.368701	−0.000069
16	16	19.059479	19.059400	−0.000079
17	17	24.141164	24.141091	−0.000074
18	18	29.411447	29.411444	−0.000003
19	19	13.500402	13.500336	−0.000066
20	20	14.615955	14.615930	−0.000025
21	21	17.541951	17.541938	−0.000013
22	22	21.552870	21.552816	−0.000054
23	23	26.154335	26.154158	−0.000178
24	24	31.085197	31.085194	−0.000003
25	25	18.000446	18.000455	0.000009
26	26	18.851727	18.851767	0.000040
27	27	21.200940	21.200967	0.000027
28	28	24.622849	24.622876	0.000027
29	29	28.737007	28.736982	−0.000025
30	30	33.287490	33.287522	0.000033

COPYRIGHT American Society of Mechanical Engineers
Licensed by Information Handling Services

TABLE C-2 DISTANCES FROM BALL 6

Distances From Ball No. 6				
Data Pt.	Ball No.	Meas. Dist.	Ref. Dist.	Dev.
1	1	28.000343	28.000323	−0.000020
2	2	22.399635	22.399699	0.000064
3	3	16.799743	16.799875	0.000131
4	4	11.199745	11.199845	0.000099
5	5	5.599895	5.599965	0.000070
6	6	0.000000	0.000000	0.000000
7	7	28.359146	28.359097	−0.000049
8	8	22.847177	22.847197	0.000020
9	9	17.392304	17.392330	0.000027
10	10	12.069826	12.069894	0.000068
11	11	7.184314	7.184336	0.000022
12	12	4.500457	4.500465	0.000008
13	13	29.410718	29.410668	−0.000049
14	14	24.139831	24.139844	0.000013
15	15	19.058845	19.058860	0.000014
16	16	14.368178	14.368232	0.000053
17	17	10.600181	10.600176	−0.000005
18	18	9.000527	9.000500	−0.000027
19	19	31.084465	31.084377	−0.000088
20	20	26.153496	26.153495	−0.000001
21	21	21.551682	21.551704	0.000023
22	22	17.541150	17.541189	0.000039
23	23	14.615782	14.615768	−0.000014
24	24	13.500351	13.500337	−0.000014
25	25	33.286455	33.286342	−0.000113
26	26	28.736002	28.736069	0.000067
27	27	24.621983	24.622032	0.000049
28	28	21.200380	21.200433	0.000053
29	29	18.851393	18.851391	−0.000001
30	30	18.000568	18.000579	0.000011

COPYRIGHT American Society of Mechanical Engineers
Licensed by Information Handling Services

TABLE C-3 DISTANCES FROM BALL 30

Distances From Ball No. 30				
Data Pt.	Ball No.	Meas. Dist.	Ref. Dist.	Dev.
1	1	33.287490	33.287522	0.000033
2	2	28.736079	28.736166	0.000087
3	3	24.622062	24.622210	0.000148
4	4	21.200198	21.200269	0.000071
5	5	18.851216	18.851278	0.000062
6	6	18.000568	18.000579	0.000011
7	7	31.084624	31.084616	−0.000008
8	8	26.153666	26.153735	0.000069
9	9	21.552245	21.552317	0.000072
10	10	17.540666	17.540734	0.000068
11	11	14.615427	14.615481	0.000054
12	12	13.500111	13.500115	0.000003
13	13	29.410935	29.410955	0.000021
14	14	24.140124	24.140204	0.000079
15	15	19.058958	19.059060	0.000102
16	16	14.368245	14.368347	0.000102
17	17	10.600151	10.600241	0.000090
18	18	9.000041	9.000080	0.000038
19	19	28.359335	28.359334	−0.000002
20	20	22.847592	22.847655	0.000064
21	21	17.391969	17.392035	0.000066
22	22	12.070181	12.070281	0.000100
23	23	7.184112	7.184317	0.000205
24	24	4.500217	4.500242	0.000025
25	25	27.999810	27.999721	−0.000089
26	26	22.399846	22.399935	0.000089
27	27	16.799772	16.799837	0.000066
28	28	11.200005	11.200061	0.000056
29	29	5.599859	5.599920	0.000060
30	30	0.000000	0.000000	0.000000

©OPYRIGHT American Society of Mechanical Engineers
Licensed by Information Handling Services

ASME B89 TECH*PAPER 90 ■ 0759670 0082365 6 ■

SECTION D
SPACE PLATE DESIGN RECOMMENDATIONS

TABLE D-1 MATERIAL LIST

Item	Qty.	Mat'l.	Description	Size
1	1	See Item	Weldment	See Item Drawing
2	27	HRS	Ball tube	5/8 dia. x 3 1/2
3	2	HRS	Probe tube, long	5/8 dia x 7 1/4
4	3	HRS	Foot tube	5/8 dia. x 3 1/2
5	4	HRS	Handle tube	1 dia. x 6 1/2
6	4	HRS	Handle	1 dia. x 7 1/2
7	3	Tool Steel	Foot	2 dia. x 2
8 [Note (1)]	30	PUR	Construction ball	#448-10, Grade 5 tungsten carbide
9	4	STD	Dowel	1/8 dia. x 5/8
10	2	HRS	Probe tube, short	5/8 dia. x 6 1/4
11	4	Tool Steel	Pad	2 1/2 dia. x 1/2
12	4	STD	Flat head screw	5/16–24 x 1/2

NOTE:
(1) Item 8 may be purchased from Industrial Techtronics, Inc., Ann Arbor, MI (or equivalent item).

GENERAL NOTES TO FIG. D-1

(a) Weld item 1 basic structure before drilling for items 2, 3, 4, 5, and 10.
(b) Size, configuration, and location of items 3, 5, 6, and 10 are optional.
(c) Drill 1/8 in. vent hole in bottom of each 2 in. x 3 in. tube.
(d) Stress relieve item 1 to maximum condition.
(e) Grind item 11 flat and square to item 7 within .001 TIR in assembly.
(f) Grind items 2 and 4 flat and parallel to item 7 within .001 TIR in assembly.
(g) Mark ball locations for identification.

COPYRIGHT American Society of Mechanical Engineers
Licensed by Information Handling Services

SPACE PLATE TEST RECOMMENDATIONS
FOR COORDINATE MEASURING MACHINES

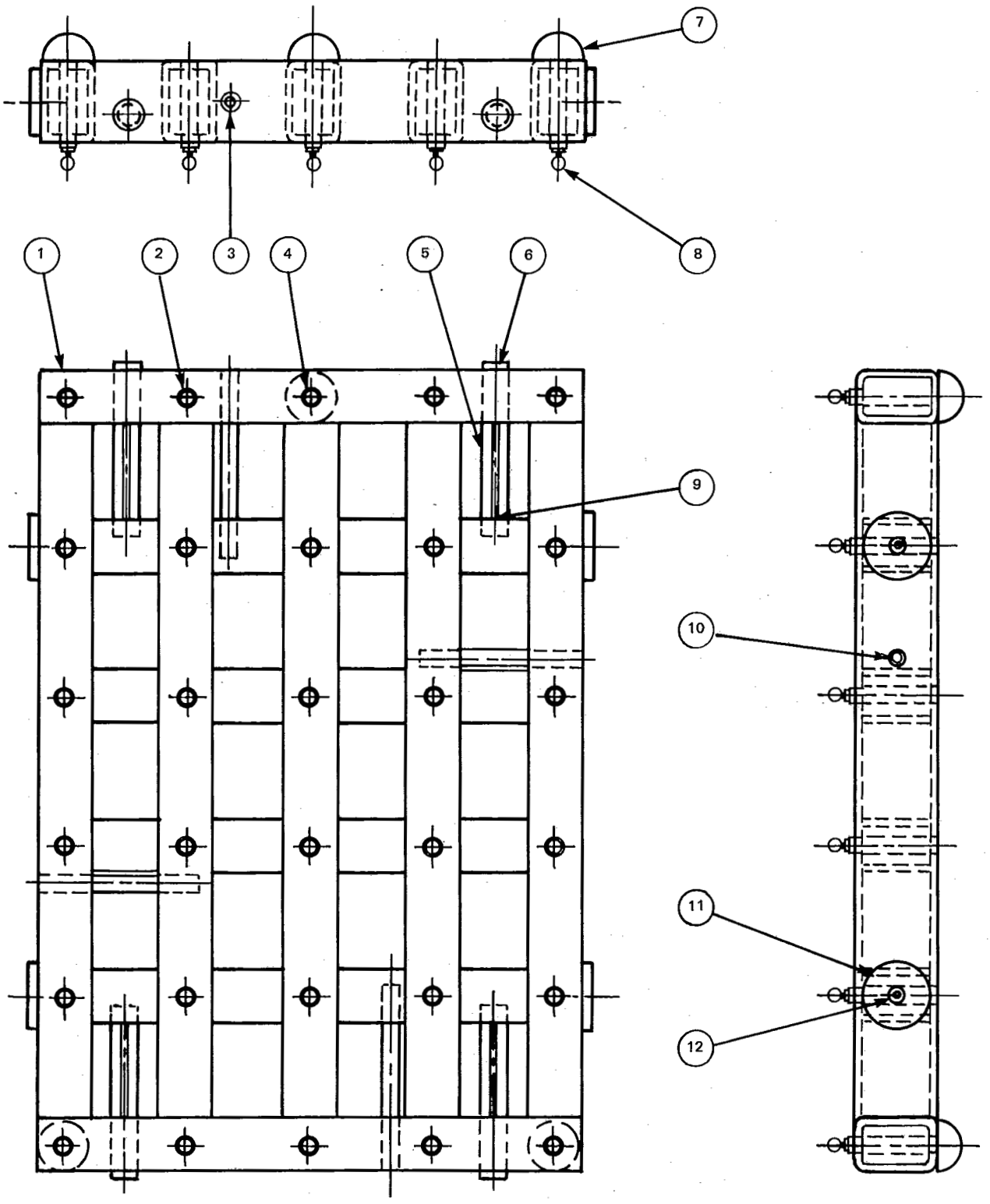

FIG. D-1 SPACE PLATE

COPYRIGHT American Society of Mechanical Engineers
Licensed by Information Handling Services

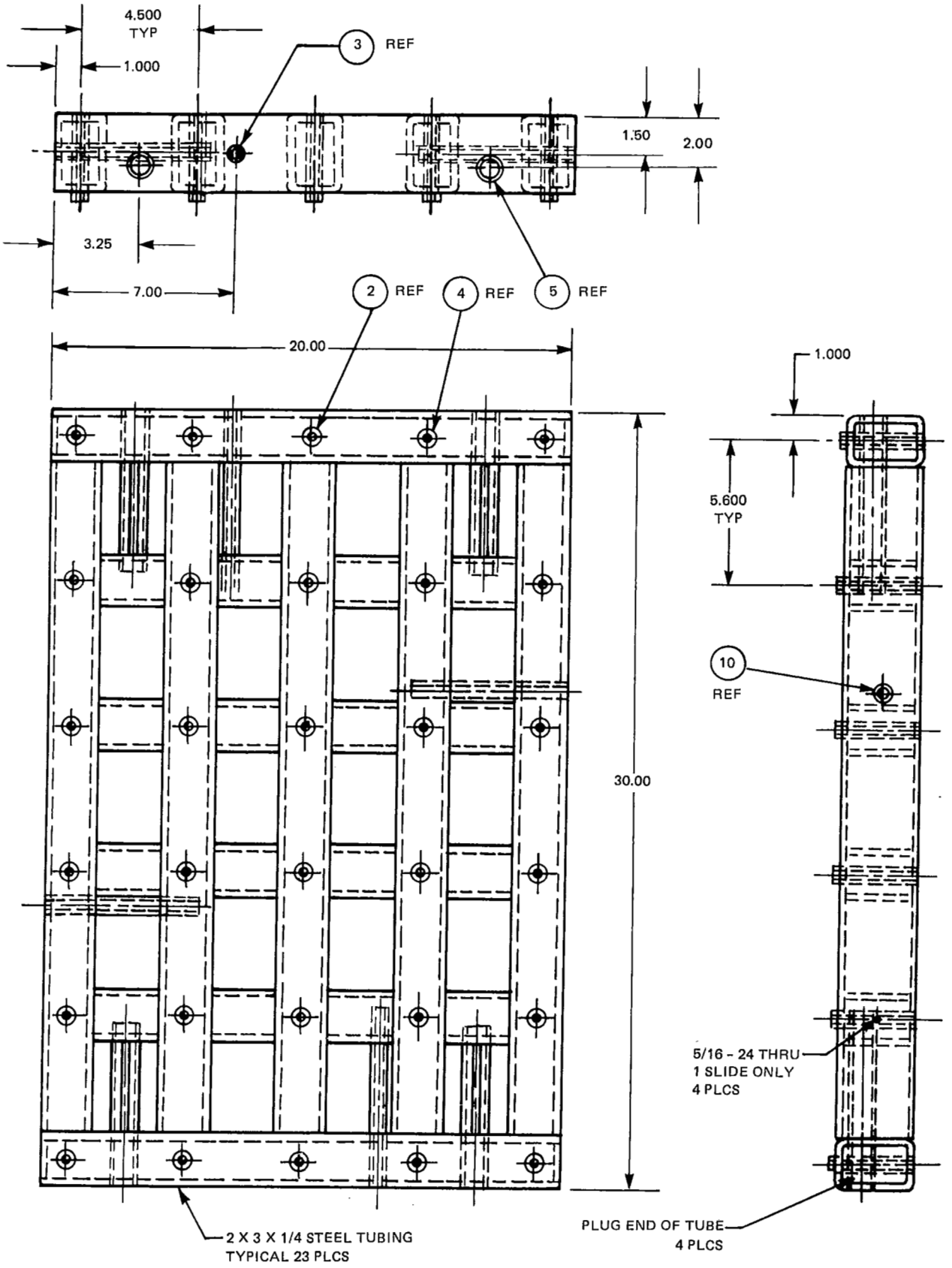

ITEM 1, 1 REQ'D

FIG. D-2 ITEM 1

COPYRIGHT American Society of Mechanical Engineers
Licensed by Information Handling Services

SPACE PLATE TEST RECOMMENDATIONS
FOR COORDINATE MEASURING MACHINES

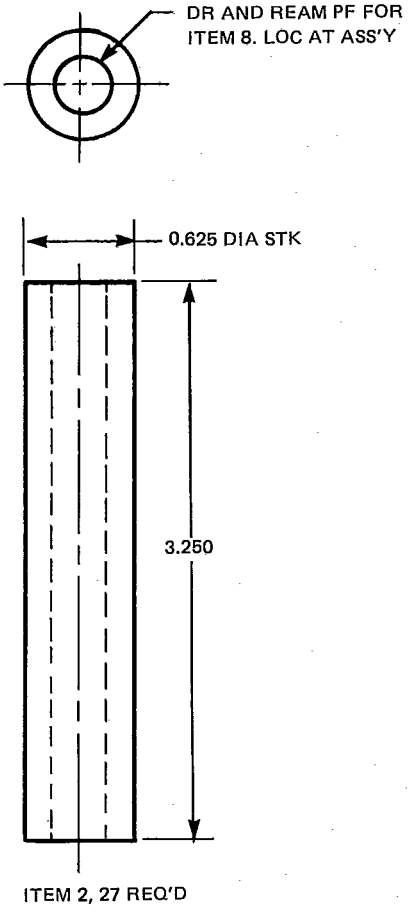

FIG. D-3 ITEM 2

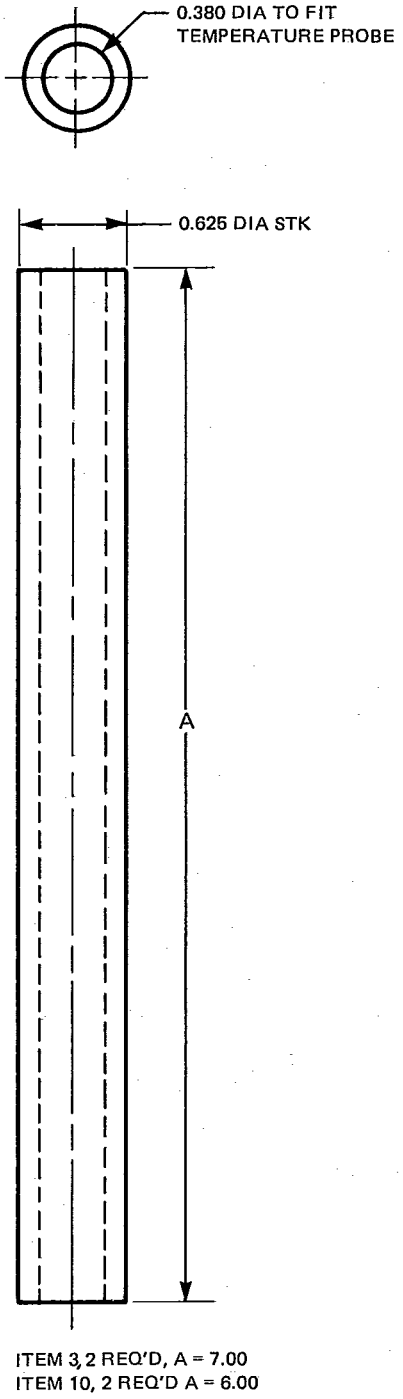

FIG. D-4 ITEMS 3 AND 10

COPYRIGHT American Society of Mechanical Engineers
Licensed by Information Handling Services

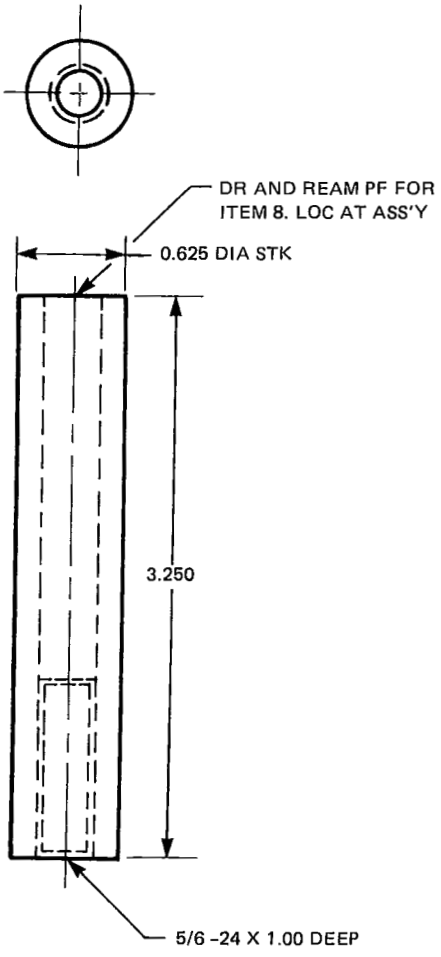

ITEM 4, 3 REQ'D

FIG. D-5 ITEM 4

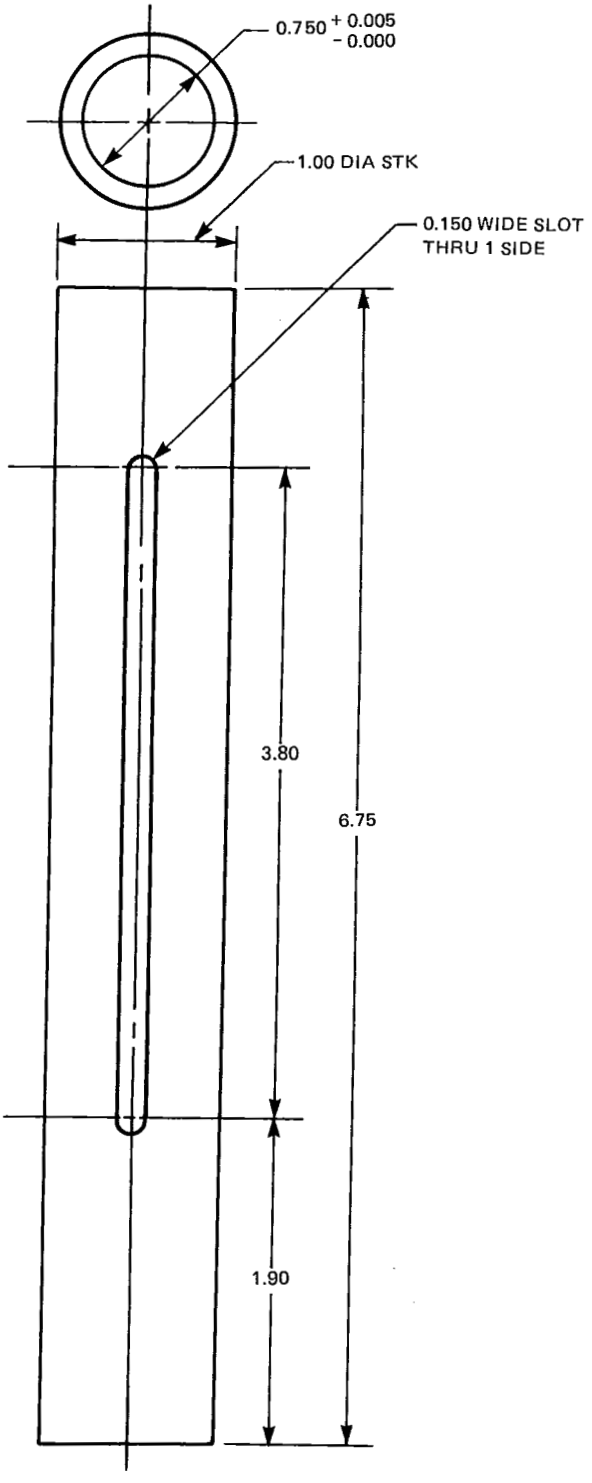

ITEM 5, 4 REQ'D

FIG. D-6 ITEM 5

COPYRIGHT American Society of Mechanical Engineers
Licensed by Information Handling Services

SPACE PLATE TEST RECOMMENDATIONS
FOR COORDINATE MEASURING MACHINES

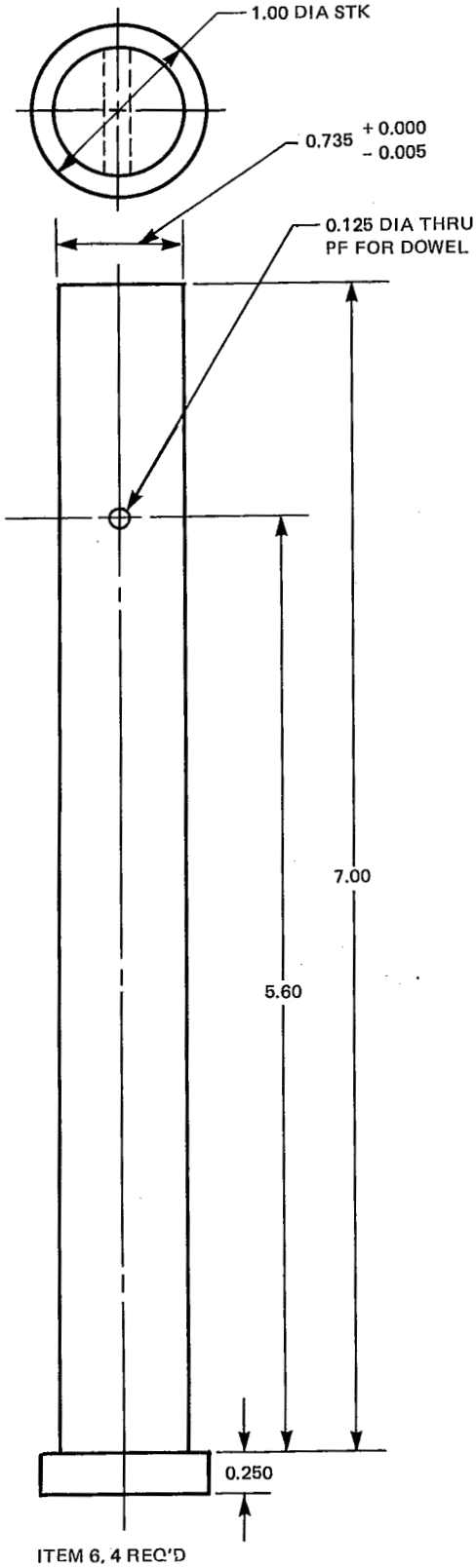

FIG. D-7 ITEM 6

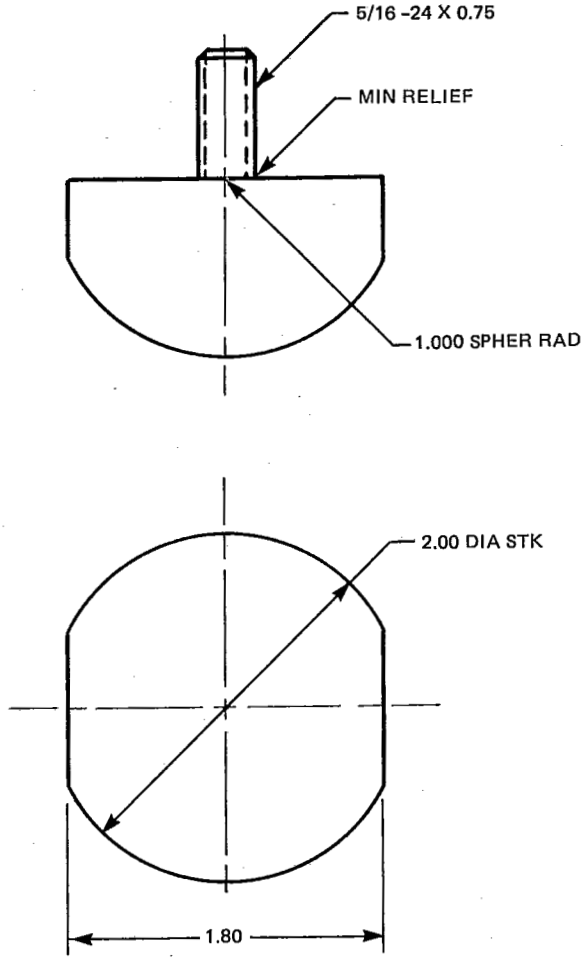

FIG. D-8 ITEM 7

COPYRIGHT American Society of Mechanical Engineers
Licensed by Information Handling Services

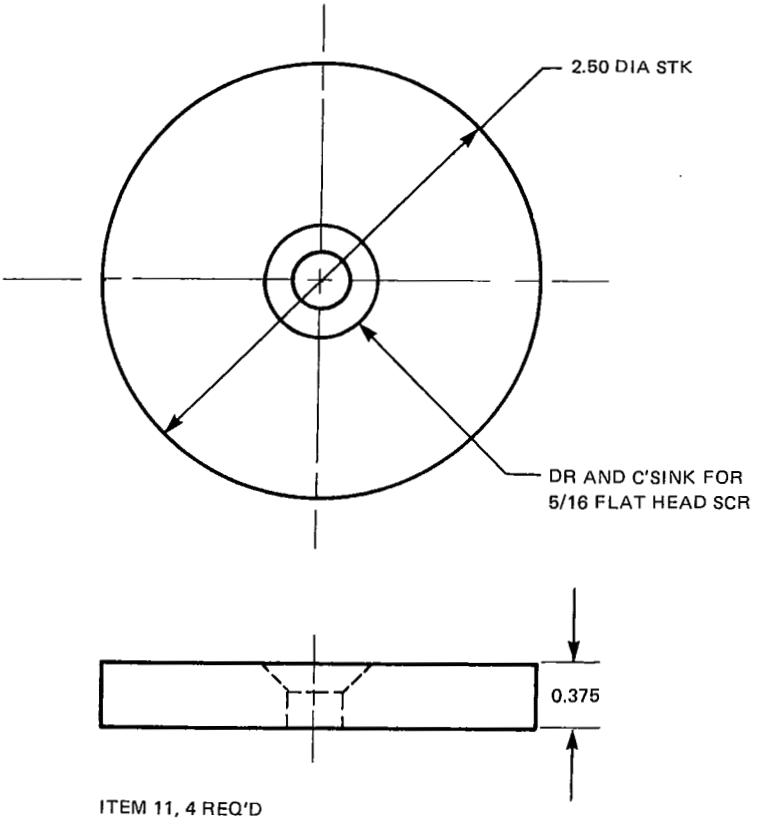

FIG. D-9 ITEM 11

COPYRIGHT American Society of Mechanical Engineers
Licensed by Information Handling Services

ASME B89 TECH*PAPER 90 ■ 0759670 0082372 3 ■

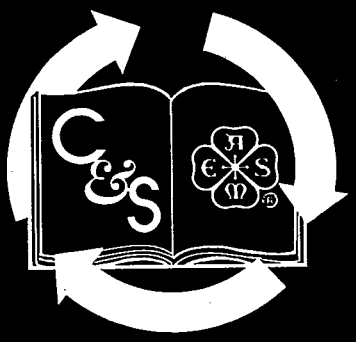

This document is printed
on 50% recycled paper.

50% RECOVERED PAPER MATERIAL means paper waste generated after the completion of the papermaking process, such as postconsumer materials, text books, envelopes, bindery waste, printing waste, cutting and converting waste, butt rolls, obsolete inventories, and rejected unused stock.

ISBN #0-7918-2104-8

L07190

COPYRIGHT American Society of Mechanical Engineers
Licensed by Information Handling Services