ASME B73.5M-1995

Specification for Thermoplastic and Thermoset Polymer Material Horizontal End Suction Centrifugal Pumps for Chemical Process

AN AMERICAN NATIONAL STANDARD



The American Society of Mechanical Engineers

Copyright ASME International
Provided by IHS under license with ASME
No reproduction or networking permitted without license from IHS

Not for Resale

AN AMERICAN NATIONAL STANDARD

Specification for Thermoplastic and Thermoset Polymer Material Horizontal End Suction Centrifugal Pumps for Chemical Process

ASME B73.5M-1995

The American Society of Mechanical Engineers

345 East 47th Street, New York, N.Y.

Copyright ASME International
Provided by IHS under license with ASME
No reproduction or networking permitted without license from IHS

Not for Resale

Date of Issuance: November 30, 1995

This Standard will be revised when the Society approves the issuance of a new edition. There will be no addenda or written interpretations of the requirements of this Standard issued to this edition.

ASME is the registered trademark of The American Society of Mechanical Engineers.

This code or standard was developed under procedures accredited as meeting the criteria for American National Standards. The Consensus Committee that approved the code or standard was balanced to assure that individuals from competent and concerned interests have had an opportunity to participate. The proposed code or standard was made available for public review and comment which provides an opportunity for additional public input from industry, academia, regulatory agencies, and the public-at-large.

ASME does not "approve," "rate," or "endorse" any item, construction, proprietary device, or activity.

ASME does not take any position with respect to the validity of any patent rights asserted in connection with any items mentioned in this document, and does not undertake to insure anyone utilizing a standard against liability for infringement of any applicable Letters Patent, nor assume any such liability. Users of a code or standard are expressly advised that determination of the validity of any such patent rights, and the risk of infringement of such rights, is entirely their own responsibility.

Participation by federal agency representative(s) or person(s) affiliated with industry is not to be interpreted as government or industry endorsement of this code or standard.

ASME accepts responsibility for only those interpretations issued in accordance with governing ASME procedures and policies which preclude the issuance of interpretations by individual volunteers.

No part of this document may be reproduced in any form,
in an electronic retrieval system or otherwise,
without the prior written permission of the publisher.

Copyright © 1995 by
THE AMERICAN SOCIETY OF MECHANICAL ENGINEERS
All Rights Reserved
Printed in U.S.A.

Copyright ASME International
Provided by IHS under license with ASME
No reproduction or networking permitted without license from IHS

Not for Resale

FOREWORD

(This Foreword is not part of ASME B73.5M-1995.)

Advances in the technology of polymers have allowed manufacturers to offer these materials in lieu of or as an alternative to alloy metals. Polymer industrial pumps have been offered since the 1970s. As more pump manufacturers had products available, it was recognized that there were no pump standards for pressure, temperature, capacity, or mechanical features. In 1986, the ASME B73 Committee established a rule committee to develop a new standard for reinforced composite material horizontal end suction centrifugal pumps for chemical process. This standard was to be for pumps with nonlinear polymers (excluding solid ceramics and/or carbon). The standard was to have the same envelope, pressure–capacity, and mechanical design features for shaft deflection and bearing life of pumps conforming to ASME B73.1M. The development of this standard progressed rapidly after the 1991 revision of ASME B73.1M was completed. The title was then changed to Specification for Thermoplastic and Thermoset Polymer Material Horizontal End Suction Centrifugal Pumps for Chemical Process.

The polymers listed in this Standard are those most commonly used for the chemical process, with the option for manufacturers to offer alternative materials. The pressure–temperature limits are based on the polymers currently available. The limits depend on the concentration and temperature of the specific liquid.

As the development of the Standard proceeded, the latest applicable features of ASME B73.1M were added, as well as a criterion for outside mechanical seals which is not found in ASME B73.1M.

Suggestions for improvement of this Standard will be welcome. They should be sent to The American Society of Mechanical Engineers, Secretary, B73 Committee, 345 East 47th Street, New York, NY 10017.

This Standard was approved as an American National Standard on July 10, 1995.

Copyright ASME International
Provided by IHS under license with ASME
No reproduction or networking permitted without license from IHS
Not for Resale

ASME STANDARDS COMMITTEE B73
Chemical Standard Pumps

(The following is the roster of the Committee at the time of approval of this Standard.)

OFFICERS

R. J. Hart, *Chair*
G. W. Sabol, *Vice Chair*
C. J. Gomez, *Secretary*

COMMITTEE PERSONNEL

A. R. Budris, *Alternate,* ITT A–C Pump
F. W. Buse, Ingersoll Dresser Pump Co.
G. C. Clasby, The Duriron Co.
R. W. Estep, Rhone–Poulenc AG Co.
R. J. Hart, E.I. DuPont de Nemours & Co.
D. C. Hughes, Dow, USA, E&CS Division
L. J. Kitchens, BW/IP International Inc.
P. T. Lahr, Consultant
A. L. Lyons, Department of the Navy, Naval Construction Battalion Center
R. H. Monroe, Jr., Monsanto Co.
A. N. Nichols, Gridlestone Pumps, Ltd.
J. C. Osborne, Goulds Pumps, Inc.
R. S. Peck, Durametallic Corp.
G. W. Sabol, Union Carbide Corp.
A. E. Stavale, ITT A-C Pump
J. C. Swalley, *Alternate,* E.I. DuPont de Nemours & Co.
D. M. Threlkel, NEMA

Copyright ASME International
Provided by IHS under license with ASME
No reproduction or networking permitted without license from IHS
Not for Resale

CONTENTS

Foreword iii
Standards Committee Roster v

1 Scope 1
2 Alternative Designs 1
3 Nomenclature and Definitions 1
4 Design and Construction Features 1
5 General Information 11
6 References 11

Figures

1 Cylindrical Seal Chamber 4
2 Self-Venting Tapered Seal Chamber 5
3 Backplate With Clamp Ring 7
4 Backplate With Seal Chamber 8
5 Seal Chamber Face Runout 9
6 Seal Chamber Register Concentricity 9
7 Shaft Sleeve Runout 9

Tables

1 Minimum Working Pressure 1
2 Pump Dimensions 12
3 Baseplate Dimensions 14
4 Approximate Performance of Standard Pumps (50 Hz) 16
5 Approximate Performance of Standard Pumps (60 Hz) 17

Copyright ASME International
Provided by IHS under license with ASME
No reproduction or networking permitted without license from IHS
Not for Resale

SPECIFICATION FOR THERMOPLASTIC AND THERMOSET POLYMER MATERIAL HORIZONTAL END SUCTION CENTRIFUGAL PUMPS FOR CHEMICAL PROCESS

1 SCOPE

This Standard covers centrifugal pumps of horizontal, end suction single stage, centerline discharge design, which components are made of thermoplastic and thermoset polymer materials either reinforced or nonreinforced. It includes dimensional interchangeability requirements and certain design features to facilitate installation and maintenance. It is the intent of this Standard that pumps of the same standard dimension designation from all sources of supply shall be interchangeable with respect to mounting dimensions, size, and location of suction and discharge nozzles, input shafts, baseplates, and foundation bolt holes.

This Standard does not include lined or nonpolymer components.

2 ALTERNATIVE DESIGNS

Alternative designs will be considered, provided they meet the intent of and cover construction and performance requirements which are equivalent to and otherwise in accordance with this Standard. Deviations from this Standard shall be described in detail.

3 NOMENCLATURE AND DEFINITIONS

3.1 Source

The nomenclature and definitions of pump components shall be in accordance with those promulgated by the Hydraulic Institute.

TABLE 1 MINIMUM WORKING PRESSURE

Nominal Impeller Diameter, in.	Minimum Working Pressure (psig) at 38°C (100°F) for Maximum Operating RPM	
	3550	1750
6	200	100
8	200	100
10	240	100
13	. . .	125
15	. . .	160

4 DESIGN AND CONSTRUCTION FEATURES

4.1 Pressure and Temperature Limits

4.1.1 Pressure–Temperature Limits. The design pressure of the liquid end of the pump held within the dimensional restraints of this Standard will depend on the molding process. Those pressures will result in liquid ends that can operate at a maximum speed of 3550 or 1750 RPM. The casing, seal chamber, stuffing box, and gland for those liquid ends shall have design pressure at least equal to that in Table 1 at 38°C (100°F). Pumps may be offered at higher design pressures than the minimum stated pressures in Table 1.

4.1.2 Temperature Limits. Pumps should be mechanically suitable for a temperature range of −29°C (−20°F) to 121°C (250°F) with minimum corrosive liquids.

4.1.3 Statement. The pressure–temperature limits of a polymer pump will vary with the materials (see para. 4.9) and the molding process. The normal pressure–temperature limitations, as well as the pressure–temperature limits for specific corrosive liquids, shall be stated by the pump manufacturer. The manufacturer should have documented data on the composite material on which the pressure–temperature curves are based.

Copyright ASME International
Provided by IHS under license with ASME
No reproduction or networking permitted without license from IHS
Not for Resale

4.2 Connections

Suction and discharge flange connections shall be flanged or provided with attachments conforming to dimensions of ASME/ANSI B16.1 Class 125 for cast iron and ASME/ANSI B16.5 Class 150 for steel flanges, including bolt circle and number and size of bolt holes, except that they shall be flat face and be at full raised face thickness. Bolt holes, inserts, or stud locations shall straddle the horizontal or vertical centerline, and be subject to the manufacturer's casing pressure–temperature limitations. Such pumps shall conform to the *X* and *Y* dimensions shown in Table 2.

4.3 Casing

4.3.1 Drain Connection. Pump casing shall be provided with bosses for ½ in. NPT drain connection. Drilling and tapping of the bosses is optional. A 9.7 mm (0.38 in.) drill hole may be used instead of an 18.3 mm (0.72 in.) hole for the ½ in. NPT drain into the volute AA and AB pumps.

4.3.2 Gage Connection Boss(es). The suction and discharge nozzles or volute shall have boss(es) or adequate flange thickness for gauge connections. Bosses shall accommodate ¼ in. NPT minimum gauge connections. The drilling and tapping of the boss(es) is optional.

4.3.3 Support. The principal support of the pump shall be between the casing and baseplate. The feet can be integrally molded into the casing. There shall be a second support between the bearing housing and baseplate.

4.3.4 Disassembly of Casing–Seal Chamber. The design shall permit back removal of the rotating element from the casing without disturbing the suction and discharge connections or the driver. Tapped holes for jackscrews, slots for wedges, or equivalent means shall be provided to facilitate disassembly of the casing and seal chamber cover. Surfaces against which the jackscrews or wedges are applied shall be designed to prevent damage to parts in a manner that will not interfere with reassembly and sealing when the part is reused.

4.3.5 Main Flange Fasteners. Metallic materials used to fabricate casing fasteners and washers shall be a 300 series stainless steel or other specified corrosion-resistant material and shall not be in contact with the pumpage. Nonmetallic materials shall be compatible with the atmospheric conditions or as specified by the user. Washer contact surface shall be flat and perpendicular to the bolt axis. Bolt heads and nuts shall be reinforced by a flat washer or metal backup ring. The metal ring may be integral with another part. When flat washers are used, they shall have a minimum outside diameter of two times the bolt diameter or be specified by the user. The manufacturer shall state the assembly torque values in the instruction manual. To maintain even gasket loading, the fasteners shall be torqued in a sequential progression, as stated by the manufacturer.

4.3.6 Gaskets. The casing-to-cover gaskets shall be confined on the atmospheric side to prevent blowout. All machined gasket surfaces of thermoset materials, except threaded surfaces, shall be coated with the base composite polymer to prevent liquid bypass through exposed pores.

4.4 Impeller

4.4.1 Types. Impellers may be open, semi-open, or closed designs.

4.4.2 Axial Adjustment. If adjustment is required by the design, means for external adjustment of the impeller axial clearance shall be provided without disassembly of the liquid end.

4.4.3 Balancing. Impellers shall be single-plane spin balanced as a minimum. Single-plane balancing of components shall be performed to ISO 1940 balance quality Grade 6.3. However, when the ratio of the maximum outside diameter divided by the width at the periphery, including the shroud(s), is less than six, a two-plane spin balance may be required.

Balancing shall be accomplished by removal of material. The area of material removal shall be coated with the base polymer to prevent liquid bypass through exposed pores. A final balancing check shall be performed to assure compliance with ISO 1940 Grade 6.3.

4.4.4 Attachment. The impeller shall be positively fixed or threaded to the shaft with rotation to tighten. If the attachment is not corrosion resistant, it shall be protected.

4.5 Shaft

4.5.1 Diameter. The shaft sleeve diameter through the stuffing box shall be in increments of 3.2 mm (0.125 in.) from a 25.4 mm (1 in.) minimum diameter. To provide for the use of mechanical seals, the tol-

Copyright ASME International
Provided by IHS under license with ASME
No reproduction or networking permitted without license from IHS

Not for Resale

erance on diameter through the seal chamber shall not exceed nominal to minus 0.05 mm (0.002 in.).

4.5.2 Finish. Surface finish of the shaft or sleeve through the seal chamber and at rubbing contact bearing housing seals shall not exceed a roughness of 0.8 μm (32 μin.) unless otherwise required for the mechanical seal.

4.5.3 Runout. Shaft runout at the face of the seal chamber and at the impeller shall not exceed 0.05 mm (0.002 in.) full indicator movement (FIM).

4.5.4 Deflection. Dynamic shaft deflection at the impeller centerline shall not exceed 0.13 mm (0.005 in.) at:

(a) maximum load for pump sizes AA through A70;

NOTE: *Maximum load* is defined as the maximum hydraulic load on the largest impeller operating at any point on its maximum speed curve with a liquid specific gravity of 1.0. Consult manufacturer when liquid specific gravity exceeds 1.0.

(b) design load for pump sizes A80 and larger.

NOTE: *Design load* is defined as the maximum hydraulic load on the largest impeller operating within the manufacturer's specified range on its maximum speed curve with a specific gravity of 1.0. Consult manufacturer when liquid specific gravity exceeds 1.0.

4.5.5 Running Clearances. Running clearance must be sufficient to prevent internal rubbing contact at:

(a) maximum load for pump sizes AA through A70;

(b) design load for pump sizes A80 and larger.

4.5.6 Critical Speed. The first lateral critical speed of the rotating assembly shall be at least 120% of the maximum operating speed.

4.5.7 Fillets and Radii. All shaft shoulder radii shall be made as large as practical and finished to reduce additional stress risers.

4.6 Shaft Sealing

4.6.1 Design. One basic type of sealing cover shall be offered, called a *seal chamber.* The seal chamber is designed to accommodate mechanical seals only and can be of several designs for various types of seals. The design can include a separate gland plate where required.

4.6.1.1 Outside Mechanical Seal. When corrosive liquid has satisfactory lubricating properties, an economic choice is an outside mechanical seal. Expensive metallurgies needed for inside seals can be avoided with an outside seal design. Seal components in contact with the process liquid can be nonmetallic. Seal chamber pressure is important in determining whether a balanced or unbalanced seal is required. Pressures exceeding seal manufacturer's recommended limits may cause leakage of the pumped product to atmosphere.

Outside seals are advantageous for pumps with short stuffing boxes. Outside seals are easier to access for adjustment and troubleshooting.

4.6.2 Seal Chamber. The seal chamber can be cylindrical, tapered, or a backplate design. The tapered bore seal chamber shall have a 4 deg. minimum taper open toward the pump impeller. The seal chamber shall be designed to incorporate the detail shown in Figs. 1, 2, 3, or 4. The secondary seal contact surface(s) shall not exceed a roughness of 1.6 μm (63 μin.). Seal chamber bore corners and entry holes, such as those used for flushing or venting, shall be suitably chamfered or rounded to prevent damage to secondary seals during assembly. The seal chamber shall include means of eliminating trapped air or gas. Vent connections, when required for this purpose, shall be located at the highest practical point; drains, when provided, shall be located at the lowest practical point. The location of piping connections to the seal chamber for other functions is optional. The size of piping connections to the seal chamber and seal gland shall be $\frac{1}{4}$ in. NPT minimum, with $\frac{3}{8}$ in. NPT preferred.

Registers shall maintain the seal chamber concentric with the axis of the pump shaft within 0.13 mm (0.005 in.) FIM (Full Indicator Movement) and the seal chamber face perpendicular to the axis of the assembled pump shaft within 0.08 mm (0.003 in.) FIM. Figure 1 shows the recommended seal chamber dimensions.

4.6.2.1 Seal Chamber Flow Modifier. The use of enlarged bore seal chambers can improve process fluid flow around the seal faces. When used in conjunction with ribs, strakes, protrusions, or other devices to modify the flow path, service life can be improved dramatically under certain application conditions. Industry testing shows that flow modifiers help divert the normal circumferential flow in the seal chamber to one of balance between axial and circumferential flow. This flow change eliminates damaging vortexes of abrasive particles in the seal chamber while improving lubrication of the mechanical seal faces. Flow modifiers effectively remove solids from the seal area that can cause erosion, purge vapors or entrained gases, and dissipate heat without

Copyright ASME International
Provided by IHS under license with ASME
No reproduction or networking permitted without license from IHS Not for Resale

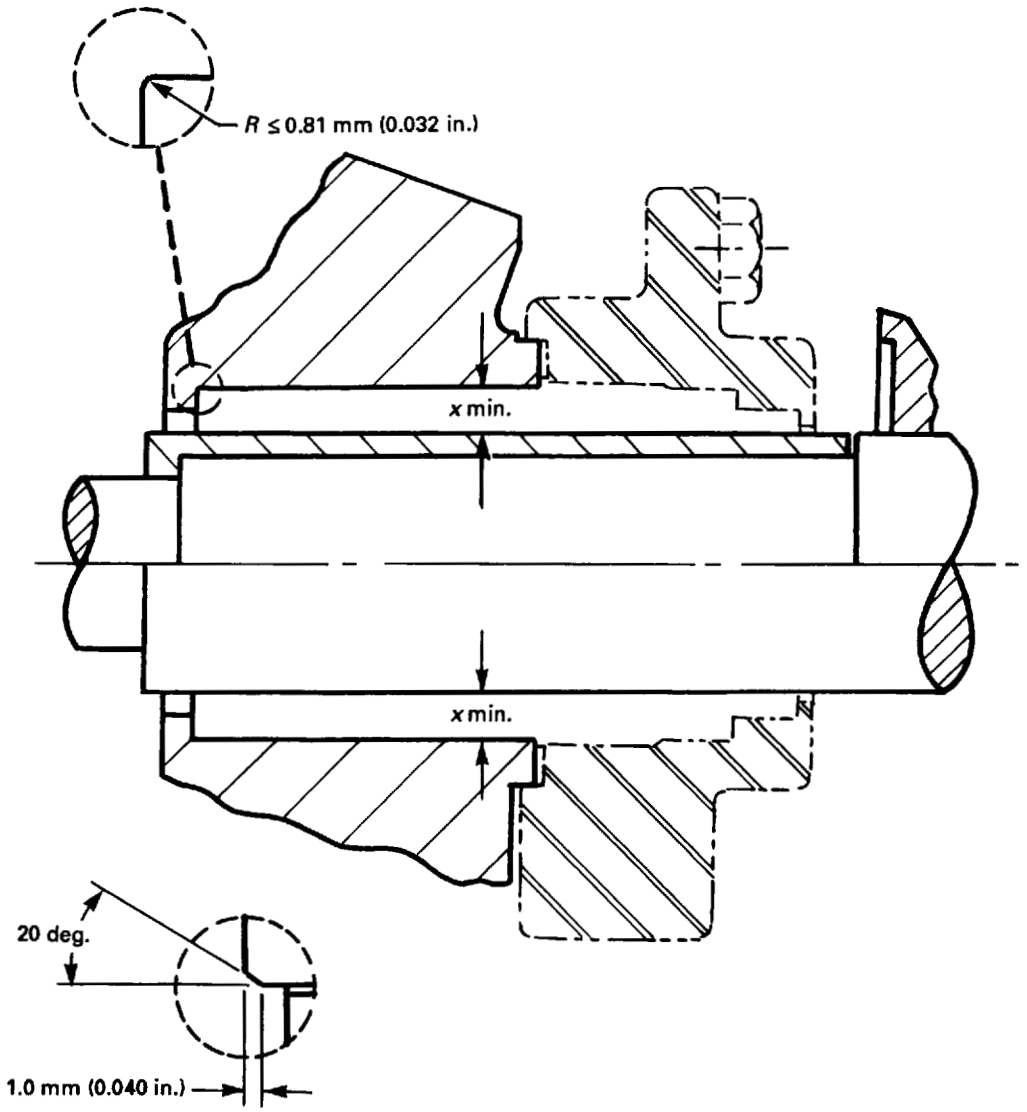

Typical Deburred Chamfer

Dimension Designation	Radial Clearance x Minimum
AA – AB	x = 19.05 mm (3/4 in.)
A05 – A80	x = 22.22 mm (7/8 in.)
A90 – A120	x = 25.40 mm (1.0 in.)

FIG. 1 CYLINDRICAL SEAL CHAMBER

Copyright ASME International
Provided by IHS under license with ASME
No reproduction or networking permitted without license from IHS
Not for Resale

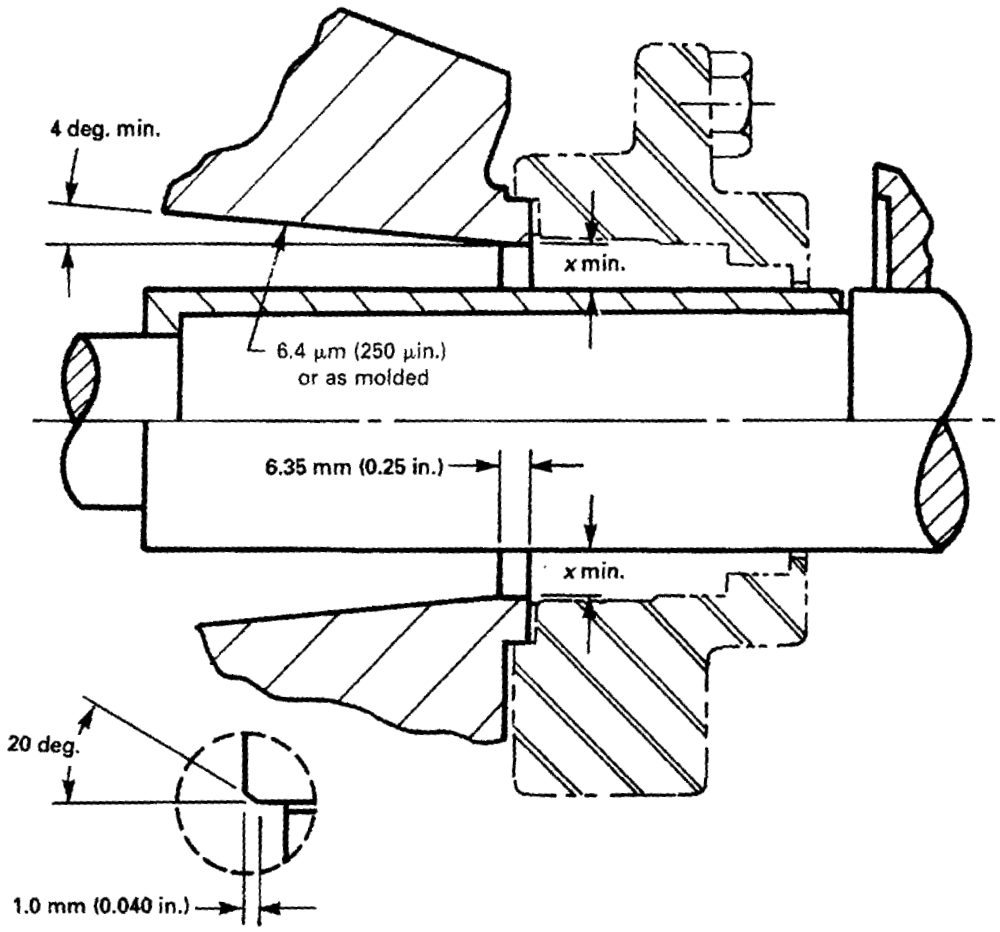

Typical Deburred Chamfer

Dimension Designation	Radial Clearance *x* Minimum
AA – AB	*x* = 19.05 mm (3/4 in.)
A05 – A80	*x* = 22.22 mm (7/8 in.)
A90 – A120	*x* = 25.40 mm (1.0 in.)

FIG. 2 SELF-VENTING TAPERED SEAL CHAMBER

Copyright ASME International
Provided by IHS under license with ASME
No reproduction or networking permitted without license from IHS

Not for Resale

ASME B73.5M 95 ■ 0759670 0571046 900 ■

external flushing. Improved mean time between planned maintenance is the benefit of clean and cool running mechanical seal chambers.

4.6.3 Tapered Seal Chamber. Taper bore chamber designs with a 4–5 deg. taper offer the maximum heat transfer of seal generated heat to the pumped product. This seal chamber design helps eliminate gas entrainment around the seal during start/stop operations. Gas bubbles can limit lubrication of the seal faces and cause a dry running condition.

Enlarged taper bore seal chambers also improve seal performance when used in applications where process fluids are close to their boiling points.

4.6.4 Backplate Seal Chamber. Outside mechanical seals are often used with backplate designs and a clamp ring (see Fig. 3). The bore in both these parts is sized to fit the stationary seat and is not controlled by this Standard. Other types of seals (inside, double, tandem) are used with backplate designs (see Fig. 4).

4.6.5 Seal Chamber Runout. Mechanical seal performance is highly dependent on the runout conditions that exist at the mechanical seal chamber. Types of runout having significant effect on seal performance include:

(a) Seal Chamber Face Runout. This is a measure of the squareness of the seal chamber face with respect to the pump shaft. It is measured by mounting a dial indicator on the pump shaft and measuring the total indicator runout at the face of the seal chamber. The maximum allowable runout is 0.08 mm (0.003 in.) FIM. (See Fig. 5.)

(b) Seal Chamber Register Runout. Provisions shall be made for centering the gland with either an inside or outside diameter register. This register shall be concentric with the shaft or sleeve and shall have a total indicator runout reading no greater than 0.13 mm (0.005 in.) FIM. (See Fig. 6.)

(c) Shaft/Shaft Sleeve Runout. This is a measure of runout at the shaft or shaft mounted sleeve O.D. with respect to a fixed point in space. It is usually measured by mounting a dial indicator at a fixed point in space, such as the face of the seal chamber, and measuring the FIM runout at the shaft mounted sleeve O.D. The maximum allowable shaft sleeve runout is 0.05 mm (0.002 in.). (See Fig. 7.)

4.6.6 Space Requirements. Space in the various seal chamber designs shall provide for one or more of the following configurations of cartridge or non-cartridge seals:

(a) single inside mechanical seals, balanced or unbalanced, with or without a throat restriction device (throat bushing);

(b) double seal, balanced or unbalanced, inboard and outboard;

(c) outside mechanical seal, balanced or unbalanced, with or without a throat bushing;

(d) tandem seals, either balanced or unbalanced.

4.6.7 Throat Restriction Devices. In single seal applications where seal life is not meeting normal design specifications, the following should be considered. The velocity of the flush needs to be increased to remove particles or fibers from the seal chamber. The sealing fluid pressure is to be raised to maintain a positive controlled flow into the process. When isolating the seal chamber from the process fluid is necessary, an external liquid is to be injected into the seal chamber. In each of these cases a close clearance throat restriction device is required.

A typical throat restriction device is a replaceable bushing that utilizes a nominal I.D. clearance to the shaft sleeve. Throat bushings are designed to fit standard stuffing box configurations with a throat shoulder that the bushing can be installed against. Fixed bushings are normally pressed into the stuffing box core. Floating bushings are mechanically suspended to allow for shaft deflection and closer clearances.

4.6.8 Gland

(a) Bolting. Pumps shall be designed for four gland bolts.

(b) Gasket. The gland-to-stuffing box gasket or O-ring used for mechanical seals shall be confined on the atmospheric side to prevent blowout. Machine surfaces of seal chamber bore, face, and gland may be coated with the base polymer to prevent liquid bypass around the gasket.

(c) Materials of Construction

(1) The gland material shall be compatible with the liquid pumped.

(2) Bolts, studs, and nuts shall be a 300 series stainless steel or other specified corrosion-resistant material.

4.7 Inserts and Connecting Fasteners

Inserts shall be totally encapsulated except for the mating threaded surface. The insert material shall be compatible with the mating fastener. The installed insert shall be capable of being tested to 200% of the assembly values applied to the connecting fasteners or in-service values. Manufacturers shall state nominal fastener torque in the instruction manual. If re-

Copyright ASME International
Provided by IHS under license with ASME
No reproduction or networking permitted without license from IHS

Not for Resale

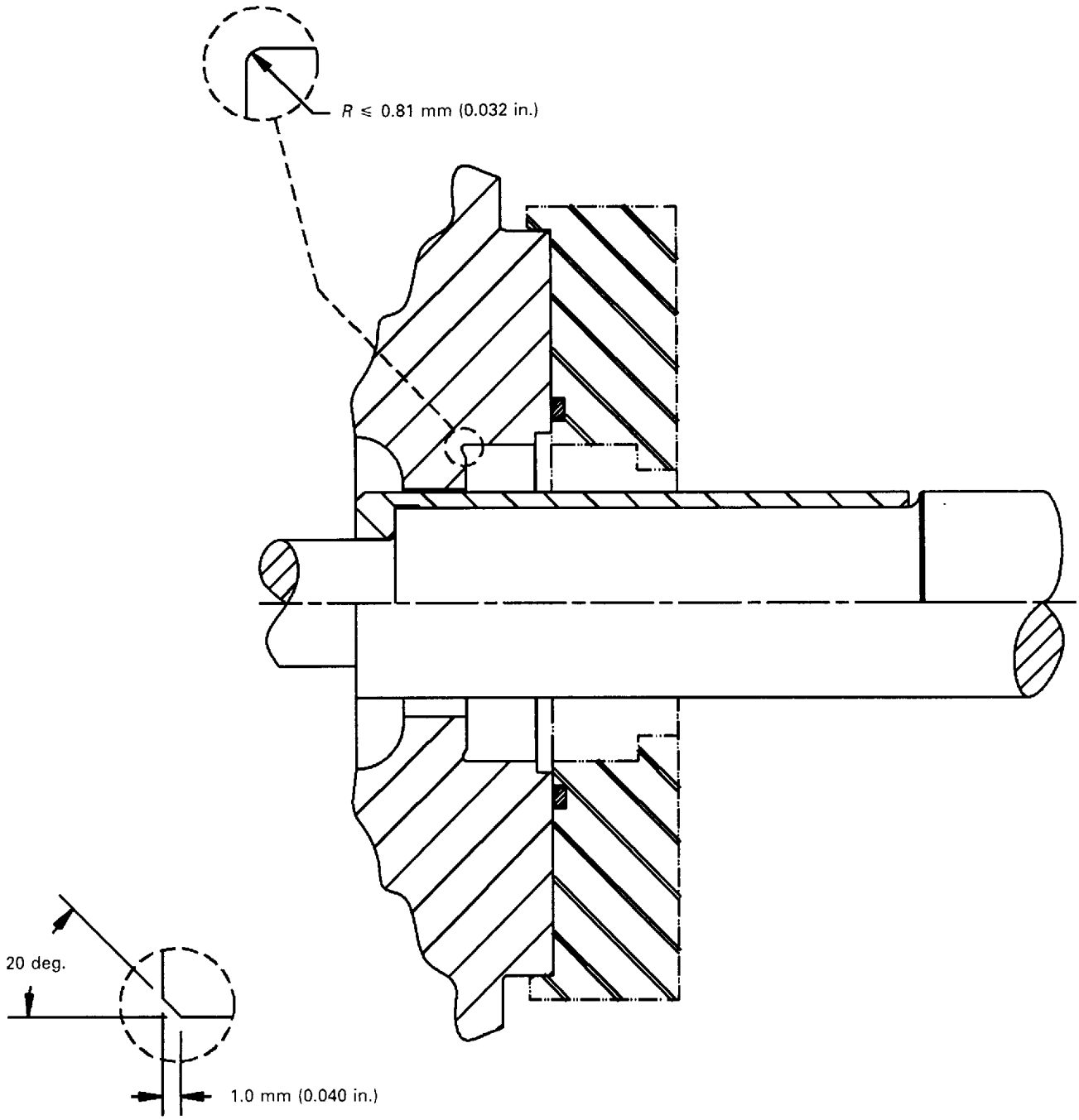

FIG. 3 BACKPLATE WITH CLAMP RING

Copyright ASME International
Provided by IHS under license with ASME
No reproduction or networking permitted without license from IHS

Not for Resale

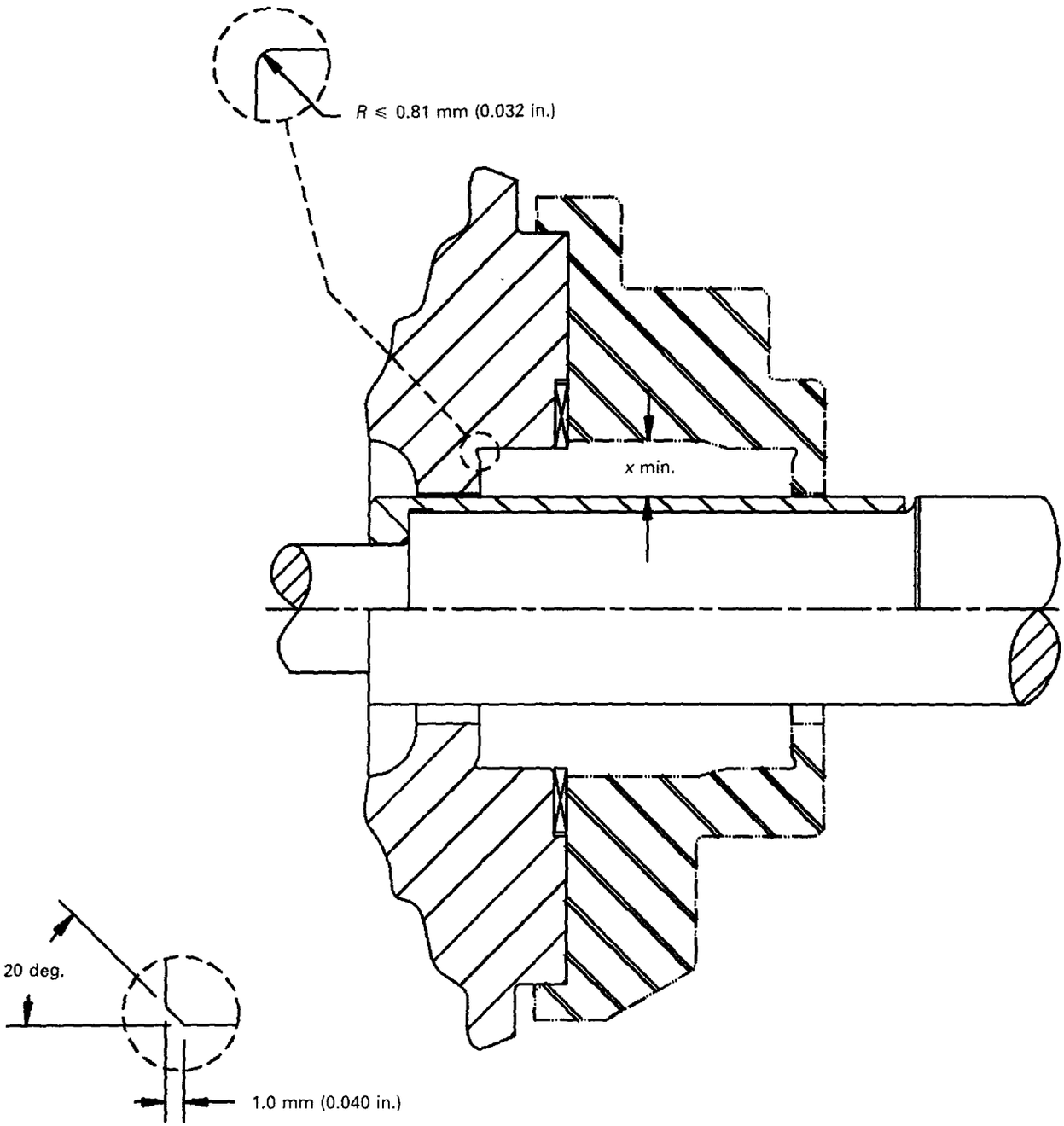

Typical Deburred Chamfer

Dimension Designation	Radial Clearance x Minimum
AA – AB	x = 19.05 mm (3/4 in.)
A05 – A80	x = 22.22 mm (7/8 in.)
A90 – A120	x = 25.40 mm (1.0 in.)

FIG. 4 BACKPLATE WITH SEAL CHAMBER

Copyright ASME International
Provided by IHS under license with ASME
No reproduction or networking permitted without license from IHS
Not for Resale

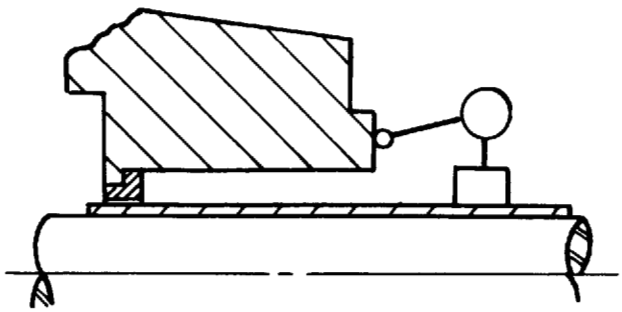

FIG. 5 SEAL CHAMBER FACE RUNOUT

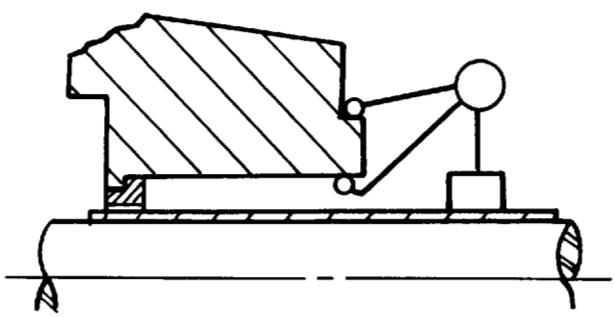

FIG. 6 SEAL CHAMBER REGISTER CONCENTRICITY

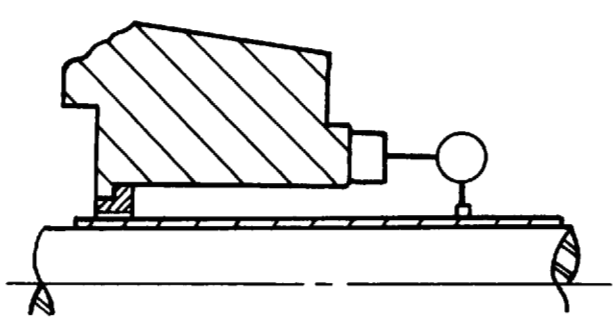

FIG. 7 SHAFT SLEEVE RUNOUT

quired, the manufacturer shall demonstrate that the inserts are capable of a minimum of 20 assemblies at 200% proof values. Torquing shall be done by the manufacturer's prescribed progressive sequential instructions.

4.8 Bearings

4.8.1 Design. Two antifriction bearing assemblies shall be provided, one assembly free to float within the frame to carry radial thrust only, and the other assembly arranged to carry both radial and axial thrust.

4.8.2 Bearing Life. Bearing life shall be selected in accordance with ANSI/AFBMA 9 and ANSI/AFBMA 11. Pump sizes AA through A70 shall have a minimum L_{10} bearing life of 17,500 hr at maximum load. Pump sizes A80 and larger shall have a minimum L_{10} bearing life of 17,500 hr at design load. (See para. 4.5.4.)

4.8.3 End Play. End play in the shaft from the thrust bearing shall be at a minimum, the definition of which depends upon internal clearances and mechanical seal requirements.

4.8.4 Sealing. Bearing housing shall be constructed to protect the bearings from water, dust, and other contaminants. The housing shall be designed so it can be machined to accept a bearing isolator.

4.8.5 Lubrication. Oil lubrication for the ball bearing shall be standard. The bearing housings shall be tapped for constant level oil feed regulator or level indicator. Bearing housings and end covers shall have bosses cast so oil mist connections can be added. Other methods of lubrication may be specified. Oil levelers and sight glass should be capable of being mounted on either side of the bearing housing. The bearing frame shall be marked with an external permanent indication of the proper oil level.

Bullseye sight glass shall not be less than $\frac{3}{4}$ in. NPT connection, with 1 in. NPT preferred. View post shall provide a center of the indication of the proper operating oil level for the bearing frame.

4.8.6 Drain. The bearing housing shall be provided with a tapped and plugged drain hole at its lowest point. A $\frac{3}{8}$ in. NPT pipe size drain is preferred; $\frac{1}{4}$ in. NPT minimum is acceptable.

Copyright ASME International
Provided by IHS under license with ASME
No reproduction or networking permitted without license from IHS
Not for Resale

4.9 Materials of Construction

The materials of construction of the major pumpage-wetted parts shall be identified. Pumps with the following materials of construction are applied to chemical services. Due to the continuous change in state-of-the-art available composites, only typical lists of materials are shown.

(a) Thermosetting composite shall be able to withstand continuous service with the liquid pumped at temperatures not exceeding 120°C (250°F), unless otherwise qualified by the manufacturer. Thermosetting materials include:

(1) vinyl esters
(2) epoxies
(3) polyesters

(b) Thermoplastic composite shall be able to withstand continuous service with the liquid pumped at temperatures not exceeding 120°C (250°F). Thermoplastic materials include:

(1) CPVC (chlorinated polyvinyl chloride)
(2) PVC (polyvinyl chloride)
(3) polypropylene
(4) polyethylene
(5) polyester
(6) PVDF (polyvinylidene fluoride)
(7) PTFE (polytetrafluoroethylene)
(8) PPS (polyphenylene sulfide)
(9) PEEK (polyetheretherketone)

(c) Unwetted cast iron parts may be ASTM A 278 (or A 48 for nonpressure containing parts) (not to be used for hazardous liquids).

(d) Unwetted cast carbon steel parts shall be ASTM A 216 Grade WCB (or cast ductile iron ASTM A 536 for nonpressure containing parts).

4.10 Corrosion Resistance

The materials of the wetted components shall be mutually selected by the user and pump manufacturer to provide a minimum life of two years (when operated in accordance with the manufacturer's instructions and pressure–temperature limits in the specified pumped fluid).

4.11 Direction of Rotation

Direction of rotation shall be clockwise when viewed from the coupling end. An arrow showing the direction of rotation shall be provided, either cast or molded on the casing or seal chamber or stamped on a plate of durable construction affixed to the pump in a prominent location.

4.12 Dimensions

Pump and baseplate dimensions shall conform to Tables 2 and 3.

4.13 Miscellaneous Design Features

4.13.1 Safety Guards. A coupling guard, in accordance with ASME B15.1, shall be furnished on all units that include a pump and driver mounted on a common baseplate. Guarding of the shaft between the seal chamber and bearing bracket shall be furnished if there are hazardous attachments on the shaft. If the shaft or sleeve is smooth, additional protection is not required. An auxiliary device to control spray from seal chamber leakage shall be provided when specified.

4.13.2 Threads. Threaded parts such as bolts, nuts, and plugs shall conform to the applicable American National Standards.

4.13.3 Lifting Rings. A lifting ring or other equivalent device shall be provided to facilitate handling the frame and associated assembly if its mass exceeds 27 kg (60 lb).

Eyebolts on motors are not suitable for lifting the entire pump motor assembly. The pump manufacturer's manual shall specify proper lifting instructions.

4.13.4 Tapped Openings. All tapped openings, including those in the mechanical seal gland which may be exposed to the pumped fluid under pressure, shall be plugged with threaded plugs rated for the working pressure. Plugs in contact with the pumped fluid shall be of a material that is compatible with the liquid pumped.

All tapped openings in the mechanical seal gland shall be identified to designate their purpose. This designation should be molded or etched immediately adjacent to the opening. Designations are F for flush, D for drain, Q for quench, and V for vent. Steam heating must not exceed temperature limits of the material.

4.13.5 Identification. The manufacturer's part identification number and material designation shall be cast, molded, or clearly die stamped on the casing, cover, and impeller.

4.13.6 Adapter. The bearing frame adapter shall be designed to resist a torque equal to or greater than the ultimate torque strength of the pump shaft at the coupling end.

Copyright ASME International
Provided by IHS under license with ASME
No reproduction or networking permitted without license from IHS
Not for Resale

When the frame adapter or adapting ring is made of metal to clamp the cover to the pump, it shall be cast ductile iron or cast carbon steel. Composite adapter may be used. All materials used must be designed to handle the breaking torque of the shaft at the coupling end and pressure rating of the casing.

4.13.7 Baseplate Rigidity. Baseplates which are to be freestanding (foot or spring supported, rather than held by anchor bolts and grouted) shall be sufficiently rigid as to limit movement of the driver shaft relative to pump shaft to 0.05 mm (0.002 in.) parallel offset when torque equivalent to the horsepower rating of the nameplate on the driver is applied. The final design is to be negotiated between manufacturer and user. This criterion is to be applied to both metallic and nonmetallic baseplates.

5 GENERAL INFORMATION

5.1 Application

5.1.1 Flange Loading. Allowable flange loading imposed by the piping shall be available from the pump manufacturer.

5.1.2 Noise. The maximum sound pressure level produced by the pump shall be available from the pump manufacturer. Tests, if specified, shall be conducted in accordance with the standards of the Hydraulic Institute. Noise data must be obtained unfiltered from the drive separately.

5.1.3 Vibration. The unfiltered vibration level measured on the pump bearing housing at the manufacturer's test facility at rated speed (±5%) and rated flow (±5%) shall not exceed 6.35 mm/s (0.25 in./sec) peak velocity or 0.064 mm (2.5 mils) peak to peak displacement.

5.1.4 Hydraulic Coverage. Tables 4 and 5 show the approximate hydraulic coverage for 50 and 60 Hz.

5.2 Tests

5.2.1 Hydrostatic. After machining, the casing, covers, and gland shall be hydrostatically tested for a minimum of 10 min, with water at 1.5 times the maximum design pressure with parts made from thermoplastics, and 1.1 times the maximum design pressure with parts made from reinforced thermosets corresponding to 38°C (100°F) for the material of construction used.

NOTE: Due to the irreversible damage that can occur to the reinforcement of thermoset reinforced parts that are put under excessive pressure, hydrostatic test pressure shall be 1.1 times the maximum design pressure. The manufacturer should be able to verify through test records that adequate sampling was done to prove that the parts can sustain 1.5 times the maximum design pressure. When a 1.5 hydrostatic test pressure is requested, all parties should agree to the consequences of possible irreversible damage.

Repair of parts is prohibited except for aesthetics which will not affect the pressure holding or torque capability of the pump.

5.2.2 Performance. When performance tests are required, they shall be conducted in accordance with Hydraulic Institute Test Standards – Centrifugal Pumps – 1.6.

5.2.3 Performance Curves. Published performance curves shall be based on tests conducted in accordance with Hydraulic Institute Test Standards – Centrifugal Pumps – 1.6.

5.3 Nameplates

Nameplates are to be of 24 U.S. Std. Gauge (minimum) AISI 300 series stainless steel and shall be securely attached to the pump with corrosion resistant materials. They shall include pump model, standard dimension designation, serial number, size, impeller diameter (maximum and installed), material of construction, maximum design pressure at 38°C (100°F), and maximum allowable operating temperature at corresponding pressure rating.

6 REFERENCES

The following documents form a part of this Standard to the extent specified herein. The latest issue shall apply, unless otherwise indicated.

6.1 American National Standards

American National Standards are available from the American National Standards Institute, 11 West 42nd Street, 13th Floor, New York, NY 10036. ASME Standards are also available from The American Society of Mechanical Engineers, 22 Law Drive, P.O. Box 2300, Fairfield, NJ 07007-2300. AFBMA standards are also available from the Anti-Friction Bearing Manufacturers Association, Inc., 1101 Connecticut Avenue, N.W., Suite 700, Washington, DC 20036.

ANSI/AFBMA 9, Load Ratings and Fatigue Life for Ball Bearings

Copyright ASME International
Provided by IHS under license with ASME
No reproduction or networking permitted without license from IHS
Not for Resale

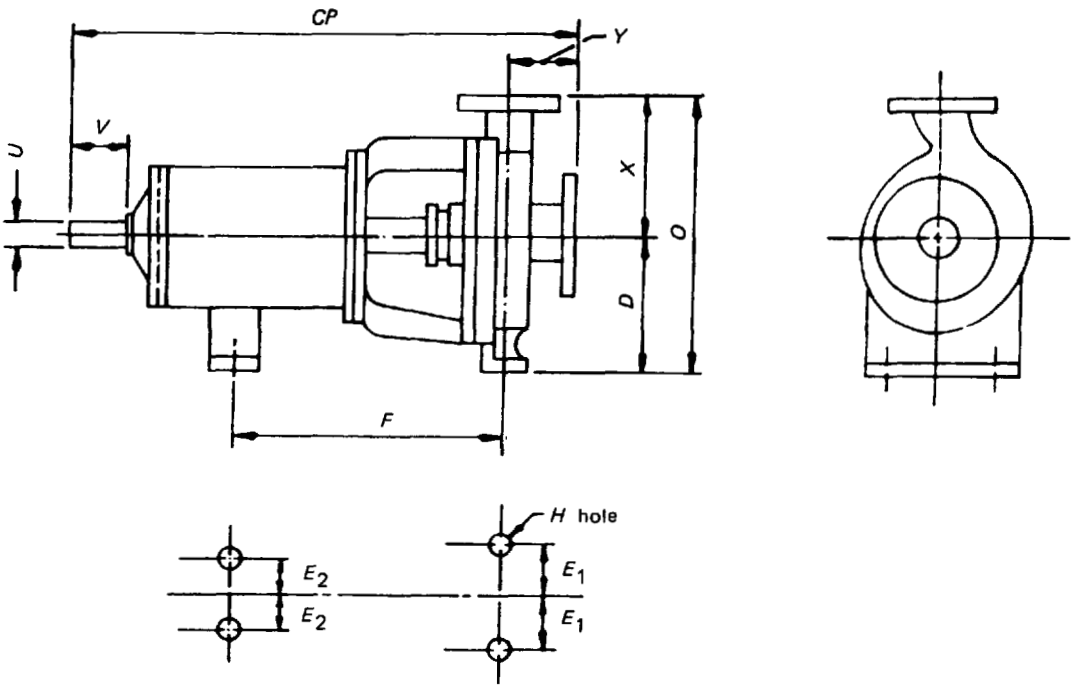

TABLE 2 PUMP DIMENSIONS
(Dimensions in Inches)

Dimension Designation	Size, Suction × Discharge × Nominal Impeller Diameter	CP	D	$2E_1$	$2E_2$	F	H	O	U [Note (1)] Diameter	U [Note (1)] Keyway	V Minimum	X	Y
AA	1½ × 1 × 6	17½	5¼	6	0	7¼	⅝	11¾	⅞	3/16 × 3/32	2	6½	4
AB	3 × 1½ × 6	17½	5¼	6	0	7¼	⅝	11¾	⅞	3/16 × 3/32	2	6½	4
A10	3 × 2 × 6	23½	8¼	9¾	7¼	12½	⅝	16½	1⅛	¼ × ⅛	2⅝	8¼	4
AA	1½ × 1 × 8	17½	5¼	6	0	7¼	⅝	11¾	⅞	3/16 × 3/32	2	6½	4
A50	3 × 1½ × 8	23½	8¼	9¾	7¼	12½	⅝	16¾	1⅛	¼ × ⅛	2⅝	8½	4
A60	3 × 2 × 8	23½	8¼	9¾	7¼	12½	⅝	17¾	1⅛	¼ × ⅛	2⅝	9½	4
A70	4 × 3 × 8	23½	8¼	9¾	7¼	12½	⅝	19¼	1⅛	¼ × ⅛	2⅝	11	4
A05	2 × 1 × 10	23½	8¼	9¾	7¼	12½	⅝	16¾	1⅛	¼ × ⅛	2⅝	8½	4
A50	3 × 1½ × 10	23½	8¼	9¾	7¼	12½	⅝	16¾	1⅛	¼ × ⅛	2⅝	8½	4
A60	3 × 2 × 10	23½	8¼	9¾	7¼	12½	⅝	17¾	1⅛	¼ × ⅛	2⅝	9½	4
A70	4 × 3 × 10	23½	8¼	9¾	7¼	12½	⅝	19¼	1⅛	¼ × ⅛	2⅝	11	4
A80	6 × 4 × 10	23½	10	9¾	7¼	12½	⅝	23½	1⅛	¼ × ⅛	2⅝	13½	4
A20	3 × 1½ × 13	23½	10	9¾	7¼	12½	⅝	20½	1⅛	¼ × ⅛	2⅝	10½	4
A30	3 × 2 × 13	23½	10	9¾	7¼	12½	⅝	21½	1⅛	¼ × ⅛	2⅝	11½	4
A40	4 × 3 × 13	23½	10	9¾	7¼	12½	⅝	22½	1⅛	¼ × ⅛	2⅞	12½	4
A80 (2)	6 × 4 × 13	23½	10	9¾	7¼	12½	⅝	23½	1⅛	¼ × ⅛	2⅝	13½	4
A90 (2)	8 × 6 × 13	33⅞	14½	16	9	18¾	⅞	30½	2⅜	⅝ × 5/16	4	16	6
A100 (2)	10 × 8 × 13	33⅞	14½	16	9	18¾	⅞	32½	2⅜	⅝ × 5/16	4	18	6
A110 (2)	8 × 6 × 15	33⅞	14½	16	9	18¾	⅞	32½	2⅜	⅝ × 5/16	4	18	6
A120 (2)	10 × 8 × 15	33⅞	14½	16	9	18¾	⅞	33½	2⅜	⅝ × 5/16	4	19	6

NOTES:
(1) *U* may be 1⅝ in. diameter in A05 through A80 sizes to accommodate high torque values.
(2) Suction connection may have tapped bolt holes.

Copyright ASME International
Provided by IHS under license with ASME
No reproduction or networking permitted without license from IHS
Not for Resale

TABLE 2 PUMP DIMENSIONS (CONT'D)
(Approximate Equivalent Dimensions in Millimeters)

Dimension Designation	Size, Suction × Discharge × Nominal Impeller Diameter	*CP*	*D*	$2E_1$	$2E_2$	*F*	*H*	*O*	*U* [Note (1)] Diameter	*U* [Note (1)] Keyway	*V* Minimum	*X*	*Y*
AA	40 × 25 × 150	445	133	152	0	184	16	298	22.23	4.76 × 2.38	51	165	102
AB	80 × 40 × 150	445	133	152	0	184	16	298	22.23	4.76 × 2.38	51	165	102
A10	80 × 50 × 150	597	210	248	184	318	16	420	28.58	6.35 × 3.18	67	210	102
AA	40 × 25 × 200	445	133	152	0	184	16	298	22.23	4.76 × 2.38	51	165	102
A50	80 × 40 × 200	597	210	248	184	318	16	425	28.58	6.35 × 3.18	67	216	102
A60	80 × 50 × 200	597	210	248	184	318	16	450	28.58	6.35 × 3.18	67	242	102
A70	100 × 80 × 200	597	210	248	184	318	16	490	28.58	6.35 × 3.18	67	280	102
A05	50 × 25 × 250	597	210	248	184	318	16	425	28.58	6.35 × 3.18	67	216	102
A50	80 × 40 × 250	597	210	248	184	318	16	425	28.58	6.35 × 3.18	67	216	102
A60	80 × 50 × 250	597	210	248	184	318	16	450	28.58	6.35 × 3.18	67	242	102
A70	100 × 80 × 250	597	210	248	184	318	16	490	28.58	6.35 × 3.18	67	280	102
A80	150 × 100 × 250	597	254	248	184	318	16	597	28.58	6.35 × 3.18	67	343	102
A20	80 × 40 × 330	597	254	248	184	318	16	520	28.58	6.35 × 3.18	67	266	102
A30	80 × 50 × 330	597	254	248	184	318	16	546	28.58	6.35 × 3.18	67	292	102
A40	100 × 80 × 330	597	254	248	184	318	16	572	28.58	6.35 × 3.18	67	318	102
A80 (2)	150 × 100 × 330	597	254	248	184	318	16	597	28.58	6.35 × 3.18	67	343	102
A90 (2)	200 × 150 × 330	860	368	406	229	476	22	775	60.33	15.88 × 7.94	102	406	152
A100 (2)	250 × 200 × 330	860	368	406	229	476	22	826	60.33	15.88 × 7.94	102	457	152
A110 (2)	200 × 150 × 380	860	368	406	229	476	22	826	60.33	15.88 × 7.94	102	457	152
A120 (2)	250 × 200 × 380	860	368	406	229	476	22	851	60.33	15.88 × 7.94	102	483	152

NOTES:
(1) *U* may be 41.28 mm diameter in A05 through A80 sizes to accommodate high torque values.
(2) Suction connection may have tapped bolt holes.

Copyright ASME International
Provided by IHS under license with ASME
No reproduction or networking permitted without license from IHS
Not for Resale

Copyright ASME International
Provided by IHS under license with ASME
No reproduction or networking permitted without license from IHS

ASME B73.5M 95 ■ 0759670 0571054 T87 ■

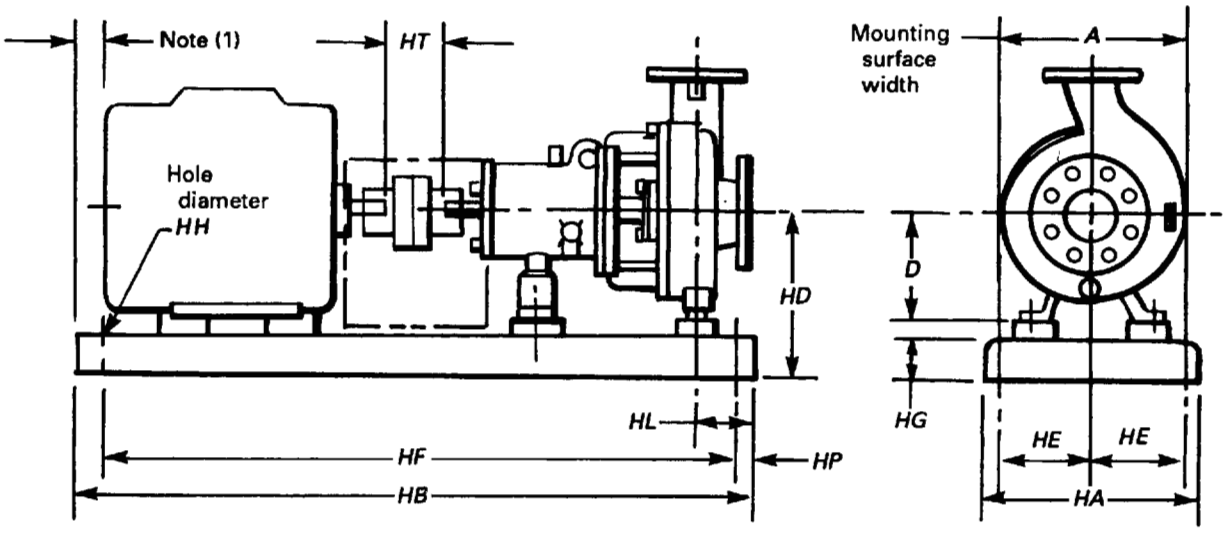

TABLE 3 BASEPLATE DIMENSIONS
(Dimensions in Inches)

Max. NEMA Frame	Baseplate No. [Note (2)]	*A* Min.	*HA* Max.	*HB*	*HT* Min.	*HD* Max. [Note (3)]				*HE*	*HF*	*HG* Max.	*HH*	*HL*	*HP*
						D=5.25	*D*=8.25	*D*=10	*D*=14.5						
184T	139	12	15	39	3.5	9	. . .	. . .	. . .	4.5	36.5	3.75	0.75	4.5	1.25
256T	148	15	18	48	3.5	10.50	. . .	. . .	. . .	6	45.5	4.13	0.75	4.5	1.25
326TS	153	18	21	53	3.5	12.88	. . .	. . .	. . .	7.5	50.5	4.75	0.75	4.5	1.25
184T	245	12	15	45	3.5	. . .	12	13.75	. . .	4.5	42.5	3.75	0.75	4.5	1.25
215T	252	15	18	52	3.5	. . .	12.38	14.13	. . .	6	49.5	4.13	0.75	4.5	1.25
286T	258	18	21	58	3.5	. . .	13	14.75	. . .	7.5	55.5	4.75	1	4.5	1.25
365T	264	18	21	64	3.5	. . .	13.88	14.75	. . .	7.5	61.5	4.75	1	4.5	1.25
405TS	268	22	26	68	3.5	. . .	14.88	14.88	. . .	9.5	65.5	4.75	1	4.5	1.25
449TS	280	22	26	80	3.5	. . .	15.88	15.88	. . .	9.5	77.5	4.75	1	4.5	1.25
286T	368	22	26	68	5	. . .	. . .	. . .	19.25	9.5	65.5	4.75	1	6.5	1.25
405T	380	22	26	80	5	. . .	. . .	. . .	19.25	9.5	77.5	4.75	1	6.5	1.25
449T	398	22	26	98	5	. . .	. . .	. . .	19.25	9.5	95.5	4.75	1	6.5	1.25

NOTES:
(1) Motor should not extend beyond end of baseplate.
(2) Baseplate number denotes pump frame 1, 2, or 3 and baseplate *HB* in inches.
(3) Includes 0.13 in. (3 mm) shimming allowance where motor height controls.

Not for Resale

ASME B73.5M 95 ■ 0759670 0571055 913 ■

TABLE 3 BASEPLATE DIMENSIONS (CONT'D)
(Approximate Equivalent Dimensions in Millimeters)

Max. NEMA Frame	Baseplate No. [Note (2)]	*A* Min.	*HA* Max.	*HB*	*HT* Min.	*HD* Max. [Note (3)]				*HE*	*HF*	*HG* Max.	*HH*	*HL*	*HP*
						D=133	*D*=210	*D*=254	*D*=368						
184T	139	305	381	991	89	229	. . .	. . .	. . .	114	927	95	19	114	32
256T	148	381	457	1219	89	267	. . .	. . .	. . .	152	1156	105	19	114	32
326TS	153	457	533	1346	89	327	. . .	. . .	. . .	191	1283	121	19	114	32
184T	245	305	381	1143	89	. . .	305	349	. . .	114	1080	95	19	114	32
215T	252	381	457	1321	89	. . .	314	359	. . .	152	1257	105	19	114	32
286T	258	457	533	1473	89	. . .	330	375	. . .	191	1410	121	25	114	32
365T	264	457	533	1626	89	. . .	353	375	. . .	191	1562	121	25	114	32
405TS	268	559	660	1727	89	. . .	378	378	. . .	241	1664	121	25	114	32
449TS	280	559	660	2032	89	. . .	403	403	. . .	241	1969	121	25	114	32
286T	368	559	660	1727	127	. . .	. . .	. . .	489	241	1664	121	25	165	32
405T	380	559	660	2032	127	. . .	. . .	. . .	489	241	1969	121	25	165	32
449T	398	559	660	2489	127	. . .	. . .	. . .	489	241	2426	121	25	165	32

NOTES:
(1) Motor should not extend beyond end of baseplate.
(2) Baseplate number denotes pump frame 1, 2, or 3 and baseplate *HB* in inches.
(3) Includes 0.13 in. (3 mm) shimming allowance where motor height controls.

Copyright ASME International
Provided by IHS under license with ASME
No reproduction or networking permitted without license from IHS
Not for Resale

TABLE 4 APPROXIMATE PERFORMANCE OF STANDARD PUMPS (50 Hz)

Dimension Designation	Size, Suction × Discharge × Nominal Impeller Diameter	1450 RPM				2900 RPM			
		Capacity		Total Head		Capacity		Total Head	
		gpm	m³/h	ft	m	gpm	m³/h	ft	m
AA	1½ × 1 × 6	31	7.0	22	6.7	62	14.2	86	26.5
AB	3 × 1½ × 6	62	14.2	22	6.7	125	28.3	86	26.5
A10	3 × 2 × 6	104	23.7	22	6.7	208	47.2	86	26.5
AA	1½ × 1 × 8	42	9.4	44	13.3	83	18.9	174	52.9
A50	3 × 1½ × 8	83	18.9	44	13.3	167	37.8	174	52.9
A60	3 × 2 × 8	125	28.3	44	13.3	250	56.7	174	52.9
A70	4 × 3 × 8	208	47.2	44	13.3	417	94.6	174	52.9
A05	2 × 1 × 10	42	9.4	61	18.6	83	18.9	243	74.1
A50	3 × 1½ × 10	83	18.9	61	18.6	167	37.8	243	74.1
A60	3 × 2 × 10	125	28.3	61	18.6	250	56.7	243	74.1
A70	4 × 3 × 10	250	56.7	61	18.6	500	113.4	243	74.1
A80	6 × 4 × 10	830	188.6	61	18.6	1077	244.8	243	74.1
A20 (1)	3 × 1½ × 13	166	37.7	104	31.7	331	73.2	412	123.6
A30 (1)	3 × 2 × 13	250	56.7	104	31.7	456	103.6	378	115.2
A40 (1)	4 × 3 × 13	500	113.6	104	31.7	704	160	275	83.3
A80	6 × 4 × 13	911	207	104	31.7	. . .	. . .	. . .	. . .
A20	3 × 1½ × 13	125	28.3	104	31.7	. . .	. . .	. . .	. . .
A30	3 × 2 × 13	250	56.7	104	31.7	. . .	. . .	. . .	. . .
A40	4 × 3 × 13	417	94.6	104	31.7	. . .	. . .	. . .	. . .
A80	6 × 4 × 13	833	189.2	104	31.7	. . .	. . .	. . .	. . .
A90	8 × 6 × 13	1666	378.2	94	28.7	. . .	. . .	. . .	. . .
A100	10 × 8 × 13	2917	662.2	94	28.7	. . .	. . .	. . .	. . .
A110	8 × 6 × 15	1666	378.2	139	42.4	. . .	. . .	. . .	. . .
A120	10 × 8 × 15	2917	662.2	139	42.4	. . .	. . .	. . .	. . .

GENERAL NOTE:
This Standard does not cover exact hydraulic performance of pumps. Information on approximate head and capacity at the best efficiency point for standard pumps is for general information only. Consult manufacturers regarding hydraulic performance data for specific applications.

NOTE:
(1) Maximum impeller diameter may be limited due to limitations of pump's rotor assembly.

ANSI/AFBMA 11, Load Ratings and Fatigue Life for Roller Bearings

ASME B15.1, Safety Standard for Mechanical Power Transmission Apparatus

ASME/ANSI B16.1, Cast Iron Pipe Flanges and Flanged Fittings

ASME/ANSI B16.5, Pipe Flanges and Flanged Fittings

6.2 Other Publications

6.2.1 ASTM Publications. ASTM standards are available from the publisher: American Society for Testing and Materials, 1916 Race Street, Philadelphia, PA 19103-1187.

ASTM A 48, Standard Specification for Gray Iron Castings

ASTM A 216/A 216M, Standard Specification for Steel Castings, Carbon, Suitable for Fusion Welding, for High Temperature Service

ASTM A 278M, Standard Specification for Gray Iron Castings for Pressure-Containing Parts for Temperatures Up to 345°C

ASTM A 536, Standard Specification for Ductile Iron Castings

6.2.2 Hydraulic Institute Publications. Hydraulic Institute standards are available from the publisher:

Copyright ASME International
Provided by IHS under license with ASME
No reproduction or networking permitted without license from IHS

Not for Resale

TABLE 5 APPROXIMATE PERFORMANCE OF STANDARD PUMPS (60 Hz)

Dimension Designation	Size, Suction × Discharge × Nominal Impeller Diameter	1750 RPM				3500 RPM			
		Capacity		Total Head		Capacity		Total Head	
		gpm	m³/h	ft	m	gpm	m³/h	ft	m
AA	1½ × 1 × 6	37	8.4	32	9.7	75	17.0	125	38.1
AB	3 × 1½ × 6	75	17.0	32	9.7	150	34.0	125	38.1
A10	3 × 2 × 6	125	28.4	32	9.7	250	56.7	125	38.1
AA	1½ × 1 × 8	50	11.3	63	19.2	100	22.7	250	76.2
A50	3 × 1½ × 8	100	22.7	63	19.2	200	45.4	250	76.2
A60	3 × 2 × 8	150	34.0	63	19.2	300	68.1	250	76.2
A70	4 × 3 × 8	250	56.7	63	19.2	500	113.5	250	76.2
A05	2 × 1 × 10	50	11.3	88	26.8	100	22.7	350	106.7
A50	3 × 1½ × 10	100	22.7	88	26.8	200	45.4	350	106.7
A60	3 × 2 × 10	150	34.0	88	26.8	300	68.1	350	106.7
A70	4 × 3 × 10	300	68.1	88	26.8	600	136.2	350	106.7
A80	6 × 4 × 10	1000	227.0	88	26.8	1300 (1)	227	350	106.7
A20 (2)	3 × 1½ × 13	200	43.4	150	45.7	400	90.8	600	182.60
A30 (2)	3 × 2 × 13	300	68.1	150	45.7	500	125.0	550	167.6
A40 (2)	4 × 3 × 13	600	136.4	150	45.7	850	193.2	400	121.9
A80	6 × 4 × 13	1100	250.0	150	45.7	. . .	. . .	. . .	. . .
A90	8 × 6 × 13	2000	454.0	135	41.1	. . .	. . .	. . .	. . .
A100	10 × 8 × 13	3500	794.5	135	41.1	. . .	. . .	. . .	. . .
A110	8 × 6 × 15	2000	454.0	200	61.0	. . .	. . .	. . .	. . .
A120	10 × 8 × 15	3500	794.5	200	61.0	. . .	. . .	. . .	. . .

GENERAL NOTE:
This Standard does not cover exact hydraulic performance of pumps. Information on approximate head and capacity at the best efficiency point for standard pumps is for general information only. Consult manufacturers regarding hydraulic performance data for specific applications.

NOTES:
(1) Liquid end may be modified for this condition.
(2) Maximum impeller diameter may be limited due to limitations of pump's rotor system.

Hydraulic Institute, 9 Sylvan Way, Parsipanny, NJ 07054-3802.

Hydraulic Institute Test Standards – Centrifugal Pumps – 1.6

6.2.3 ISO Publications. ISO (International Organization for Standardization) standards are available from the American National Standards Institute, 11 West 42nd Street, 13th Floor, New York, NY 10036.

ISO 1940-1973, Balance Quality of Rotating Bodies

Copyright ASME International
Provided by IHS under license with ASME
No reproduction or networking permitted without license from IHS
Not for Resale