ASME B73.3-2003
(Revision of ASME B73.3M-1997)

Specification for Sealless Horizontal End Suction Metallic Centrifugal Pumps for Chemical Process

AN AMERICAN NATIONAL STANDARD



The American Society of Mechanical Engineers

Copyright ASME International
Provided by IHS under license with ASME
No reproduction or networking permitted without license from IHS

Not for Resale

The American Society of Mechanical Engineers

AN AMERICAN NATIONAL STANDARD

SPECIFICATION FOR SEALLESS HORIZONTAL END SUCTION METALLIC CENTRIFUGAL PUMPS FOR CHEMICAL PROCESS

ASME B73.3-2003

(Revision of ASME B73.3M-1997)

Copyright ASME International
Provided by IHS under license with ASME
No reproduction or networking permitted without license from IHS
Not for Resale

Date of Issuance: September 10, 2004

The next edition of this Standard is scheduled for publication in 2008. There will be no addenda or written interpretations of the requirements of this Standard issued to this edition.

ASME is the registered trademark of The American Society of Mechanical Engineers.

This code or standard was developed under procedures accredited as meeting the criteria for American National Standards. The Consensus Committee that approved the code or standard was balanced to assure that individuals from competent and concerned interests have had an opportunity to participate. The proposed code or standard was made available for public review and comment that provides an opportunity for additional public input from industry, academia, regulatory agencies, and the public-at-large.

ASME does not "approve," "rate," or "endorse" any item, construction, proprietary device, or activity.

ASME does not take any position with respect to the validity of any patent rights asserted in connection with any items mentioned in this document, and does not undertake to insure anyone utilizing a standard against liability for infringement of any applicable Letters Patent, nor assume any such liability. Users of a code or standard are expressly advised that the determination of the validity of any such patent rights, and the risk of infringement of such rights, is entirely their own responsibility.

Participation by federal agency representative(s) or person(s) affiliated with industry is not to be interpreted as government or industry endorsement of this code or standard.

ASME accepts responsibility for only those interpretations of this document issued in accordance with the established ASME procedures and policies, which precludes the issuance of interpretations by individuals.

No part of this document may be reproduced in any form,
in an electronic retrieval system or otherwise,
without the prior written permission of the publisher.

The American Society of Mechanical Engineers
Three Park Avenue, New York, NY 10016-5990

Copyright © 2004 by
THE AMERICAN SOCIETY OF MECHANICAL ENGINEERS
All rights reserved
Printed in U.S.A.

Copyright ASME International
Provided by IHS under license with ASME
No reproduction or networking permitted without license from IHS

Not for Resale

CONTENTS

Foreword iv
Committee Roster v
Correspondence With the B73 Committee vi

1 Scope 1

2 Alternative Design 1

3 Nomenclature and Definitions 1

4 Design and Construction Features 1

5 General Information 16

6 References 17

7 Documentation 18

Figures

1 Pump and Driver Outline Drawing for Magnetic Drive Pumps 19
2 Pump and Driver Outline Drawing for Canned Motor Pumps 20
3 Pump Fluid Circulation Plans 22
4 Cooling and Heating Piping Plans 25
5 Typical Magnetic Drive Pump Performance Curve 26
6 Typical Canned Motor Pump Performance Curve 27

Form

1 Sealless Centrifugal Pump Data Sheet 21

Tables

1 Pump Dimensions for Magnetic Drive Pumps 2
2 Baseplate Dimensions for Magnetic Drive Pumps 5
3 Pump Dimensions for Canned Motor Pumps 7
4 Baseplate Dimensions for Canned Motor Pumps 9
5 Approximate Performance of Standard Pumps (50 Hz) 11
6 Approximate Performance of Standard Pumps (60 Hz) 12
7 Minimum Continuous Flow 13

Copyright ASME International
Provided by IHS under license with ASME
No reproduction or networking permitted without license from IHS
Not for Resale

FOREWORD

In 1991 the ASME Standards Committee B73, Chemical Standard Pumps, formed a sealless pump working group to develop a standard for sealless pumps that would correspond to ASME B73.1M, Specification for Horizontal End Suction Centrifugal Pumps for Chemical Process.

Though these pumps are sealless (i.e., they do not use a dynamic seal to prevent leakage around the drive shaft), leakage can occur as a result of certain types of wear or misoperation. The user must take appropriate supplemental safety precautions when operating these pumps.

The first edition of this Standard was approved as an American National Standard on August 7, 1997.

In the intervening years, work continued on a revision of ASME B73.1M. As that work drew near to completion, the sealless working group began to develop a revision of the 1997 edition of ASME B73.3M to reflect the changes being made in ASME B73.1M. This revision of the Standard is the result of that work. Specifically,

- Some paragraphs were simplified and clarified.
- The presentation of units was changed to reflect that the U.S. Customary units were the primary units of measurement.
- The sections on flanges and flange loading were revised.
- Sound and vibration requirements were revised.
- Information concerning "Operating Region" and "NPSH Margin" was added.
- Auxiliary connection symbols were added.
- Additional pump sizes were added.
- Table 3 was revised to reflect changes in the Frame 1 pump dimensions.
- Table 7, Minimum Continuous Flow, was added.
- Form 1 was revised to reflect additional required values.

Suggestions for improvement of this Standard will be welcome and should be sent to The American Society of Mechanical Engineers, Attn.: Secretary, B73 Committee, Three Park Avenue, New York, NY 10016-5990.

This Standard was approved as an American National Standard on April 3, 2003.

Copyright ASME International
Provided by IHS under license with ASME
No reproduction or networking permitted without license from IHS
Not for Resale

ASME STANDARDS COMMITTEE B73
Chemical Standard Pumps

(The following is the roster of the Committee at the time of approval of this Standard.)

OFFICERS

R. J. Hart, *Chair*
G. W. Sabol, *Vice Chair*
C. J. Gomez, *Secretary*

COMMITTEE PERSONNEL

B. M. Burkelman, ANSIMAG, Inc.
K. R. Burkhardt, *Alternate,* E. I. DuPont de Nemours & Co.
G. C. Clasby, Flowserve Corp., Pump Division
D. L. Dickman, *Alternate,* Flowserve Corp., Pump Division
J. F. Dolniak, Eli Lilly & Co.
R. W. Estep, Union Carbide Corp.
J. E. Gilmore, Mitsubishi Polyester Film, LLC
C. J. Gomez, The American Society of Mechanical Engineers
R. J. Hart, Consultant
M. T. Henessey, Flowserve Corp., Fluid Sealing Division
W. G. Klingerg, Sterling Fluid Systems
E. W. Allis, *Alternate,* Sterling Fluid Systems
J. C. Osborne, AR Wilfley & Sons, Inc.
J. D. Quill, ITT Industries — Goulds
A. E. Stavale, *Alternate,* ITT Industries — Goulds
J. L. Ryan, Met-Pro Corp., Dean Pump Division
G. W. Sabol, Union Carbide Corp.
M. D. Smith, Syndyne Corp.
D. M. Threlkel, NEMA

Copyright ASME International
Provided by IHS under license with ASME
No reproduction or networking permitted without license from IHS
Not for Resale

CORRESPONDENCE WITH THE B73 COMMITTEE

General. ASME Standards are developed and maintained with the intent to represent the consensus of concerned interests. As such, users of this Standard may interact with the Committee by requesting interpretations, proposing revisions, and attending Committee meetings. Correspondence should be addressed to:

Secretary, B73 Standards Committee
The American Society of Mechanical Engineers
Three Park Avenue
New York, NY 10016-5990

Proposing Revisions. Revisions are made periodically to the Standard to incorporate changes that appear necessary or desirable, as demonstrated by the experience gained from the application of the Standard. Approved revisions will be published periodically.

The Committee welcomes proposals for revisions to this Standard. Such proposals should be as specific as possible, citing the paragraph number(s), the proposed wording, and a detailed description of the reasons for the proposal, including any pertinent documentation.

Attending Committee Meetings. The B73 Standards Committee regularly holds meetings or telephone conferences, which are open to the public. Persons wishing to attend any meeting or telephone conference should contact the Secretary of the B73 Standards Committee or check our Web site http://www.asme.org/codes/.

Copyright ASME International
Provided by IHS under license with ASME
No reproduction or networking permitted without license from IHS
Not for Resale

SPECIFICATION FOR SEALLESS HORIZONTAL END SUCTION METALLIC CENTRIFUGAL PUMPS FOR CHEMICAL PROCESS

1 SCOPE

This Standard covers sealless centrifugal pumps of horizontal end suction single stage and centerline discharge design. This Standard includes dimensional interchangeability requirements and certain design features to facilitate installation and maintenance. It is the intent of this Standard that pumps of the same standard dimensional designation from all sources of supply shall be interchangeable with respect to mounting dimensions, size, and location of suction and discharge nozzles, input shafts, baseplates, and foundation bolt holes (see Tables 1, 2, 3, and 4).

2 ALTERNATIVE DESIGN

2.1 Extended Design[1]

Dimensions for an extended length design alternative are included. The extended length alternative shall conform to the basic design features of this Standard including those providing interchangeability with respect to mounting dimensions at the casing, size, and location of the suction and discharge nozzles (see column heads with *e* suffix in Tables 1 through 4 for dimensional limits). Manufacturers, when offering extended length pumps, shall state this fact in their proposal.

NOTE: For Tables 1 and 2 the extended length dimension is a maximum value. Any dimension between the standard and maximum extended length is acceptable.

2.2 Alternative Design

Alternative designs will be considered, provided they meet the intent of this Standard and cover construction and performance which are equivalent to and otherwise in accordance with this Standard. All deviations from these specifications shall be described in detail by the seller and approved by the purchaser.

3 NOMENCLATURE AND DEFINITIONS

All nomenclature and definitions of pump components shall be in accordance with ANSI/HI 5.1 through 5.6.

canned motor pump (CMP): a type of sealless pump which has a common shaft to link the pump and motor in a single sealed unit. The pumped liquid is circulated through the motor, but is isolated from the motor components by a corrosion-resistant containment liner.

magnetic drive pump (MDP): a type of sealless pump which utilizes an outer ring of permanent magnets or electromagnets to drive an internal rotating assembly consisting of an impeller, shaft, and inner drive member (torque ring or inner magnet ring) through a corrosion-resistant containment shell.

4 DESIGN AND CONSTRUCTION FEATURES

4.1 Pressure and Temperature Limits

4.1.1 Pressure Limits. The design pressure of the pump shall be at least as great as the pressure–temperature rating of ASME B16.5 or ASME B16.42 Class 150 flanges of the material used. Primary pressure-containing boundary (and secondary pressure-containing boundary if required) shall be designed to withstand a hydrostatic test at 1.5 times the maximum design pressure for the material of construction used (see para. 5.2.1).

All primary pressure-containing parts shall also be capable of resisting a vacuum of 14.7 psi (760 mmHG) at 68°F (20°C).

4.1.2 Temperature Limits. Pumps should be available for temperatures up to 500°F (260°C). Jacketing and other modifications may be required to meet the operating temperature.

4.1.3 Statement. Temperature limitations of the liquid at the suction flange shall be stated by the pump manufacturer.

NOTE: The application of the pump shall take into consideration the fluid characteristics as supplied by the user. This will require consideration of such characteristics as specific heat and vapor pressure of the liquid which establishes these limits.

4.2 Flanges

Suction and discharge nozzles shall be flanged. Flanges shall conform to ASME B16.5 or ASME B16.42 Class 150 standards except that marking requirements are not applicable and the maximum acceptable tolerance on parallelism of the back of the flange shall be 3 deg, and bolt holes may be tapped where noted in Tables 1 and 3.

[1] The purpose of the maximum extension is to enhance bearing reliability, lubrication containment systems, secondary containment sealing, increased power capability, and other features.

Copyright ASME International
Provided by IHS under license with ASME
No reproduction or networking permitted without license from IHS
Not for Resale

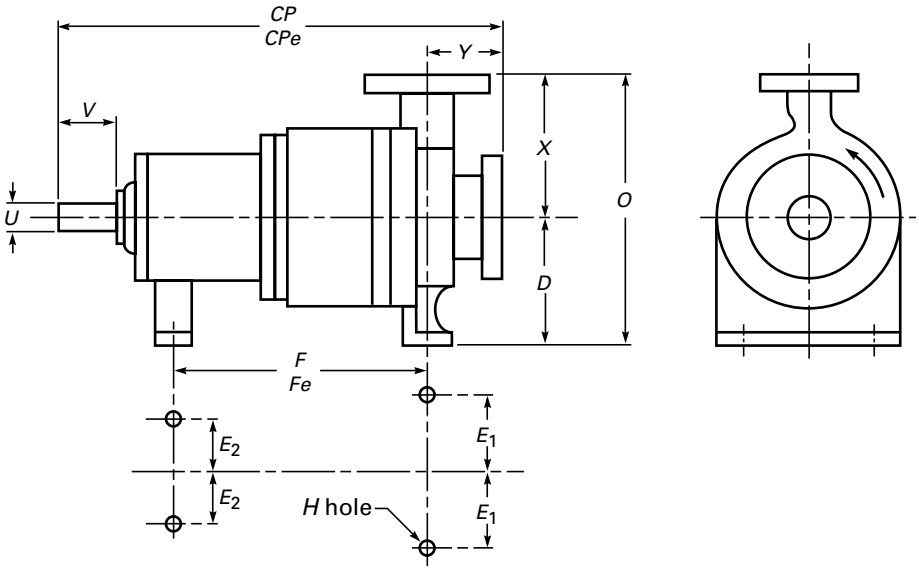

Table 1 Illustration

Copyright ASME International
Provided by IHS under license with ASME
No reproduction or networking permitted without license from IHS

Not for Resale

Copyright ASME International
Provided by IHS under license with ASME
No reproduction or networking permitted without license from IHS

Table 1 Pump Dimensions for Magnetic Drive Pumps

Dimension Designation	Size: Suction × Discharge × Nominal Impeller Dia	Dimension, in.													
		CP	*CPe* [Note (1)]	*D*	$2E_1$	$2E_2$	*F*	*Fe* [Note (1)]	*H*	*O*	*U* [Note (2)] Dia	*U* [Note (2)] Keyway	*V*, Min.	*X*	*Y*
AA	1.5 × 1 × 6	17.5	21.5	5.25	6	0	7.25	11.25	0.625	11.75	0.875	0.188 × 0.094	2	6.5	4
AB	3 × 1.5 × 6	17.5	21.5	5.25	6	0	7.25	11.25	0.625	11.75	0.875	0.188 × 0.094	2	6.5	4
AC [Note (3)]	3 × 2 × 6	17.5	21.5	5.25	6	0	7.25	11.25	0.625	11.75	0.875	0.188 × 0.094	2	6.5	4
AA [Note (3)]	1.5 × 1 × 8	17.5	21.5	5.25	6	0	7.25	11.25	0.625	11.75	0.875	0.188 × 0.094	2	6.5	4
AB [Note (3)]	3 × 1.5 × 8	17.5	21.5	5.25	6	0	7.25	11.25	0.625	11.75	0.875	0.188 × 0.094	2	6.5	4
A10	3 × 2 × 6	23.5	28.5	8.25	9.75	7.25	12.5	17.5	0.625	16.5	1.13	0.25 × 0.125	2.63	8.25	4
A50	3 × 1.5 × 8	23.5	28.5	8.25	9.75	7.25	12.5	17.5	0.625	16.75	1.13	0.25 × 0.125	2.63	8.5	4
A60	3 × 2 × 8	23.5	28.5	8.25	9.75	7.25	12.5	17.5	0.625	17.75	1.13	0.25 × 0.125	2.63	9.5	4
A70	4 × 3 × 8	23.5	28.5	8.25	9.75	7.25	12.5	17.5	0.625	19.25	1.13	0.25 × 0.125	2.63	11	4
A05 [Note (3)]	2 × 1 × 10	23.5	28.5	8.25	9.75	7.25	12.5	17.5	0.625	16.75	1.13	0.25 × 0.125	2.63	8.5	4
A50	3 × 1.5 × 10	23.5	28.5	8.25	9.75	7.25	12.5	17.5	0.625	16.75	1.13	0.25 × 0.125	2.63	8.5	4
A60	3 × 2 × 10	23.5	28.5	8.25	9.75	7.25	12.5	17.5	0.625	17.75	1.13	0.25 × 0.125	2.63	9.5	4
A70	4 × 3 × 10	23.5	28.5	8.25	9.75	7.25	12.5	17.5	0.625	19.25	1.13	0.25 × 0.125	2.63	11	4
A40	4 × 3 × 10	23.5	28.5	10	9.75	7.25	12.5	17.5	0.625	22.5	1.13	0.25 × 0.125	2.63	12.5	4
A80 [Note (4)]	6 × 4 × 10	23.5	28.5	10	9.75	7.25	12.5	17.5	0.625	23.5	1.13	0.25 × 0.125	2.63	13.5	4
A20 [Note (3)]	3 × 1.5 × 13	23.5	28.5	10	9.75	7.25	12.5	17.5	0.625	20.5	1.13	0.25 × 0.125	2.63	10.5	4
A30	3 × 2 × 13	23.5	28.5	10	9.75	7.25	12.5	17.5	0.625	21.5	1.13	0.25 × 0.125	2.63	11.50	4
A40	4 × 3 × 13	23.5	28.5	10	9.75	7.25	12.5	17.5	0.625	22.5	1.13	0.25 × 0.125	2.63	12.5	4
A80 [Note (4)]	6 × 4 × 13	23.5	28.5	10	9.75	7.25	12.5	17.5	0.625	23.5	1.13	0.25 × 0.125	2.63	13.5	4
A90 [Note (4)]	8 × 6 × 13	33.88	39.88	14.5	16	9	18.75	24.75	0.875	30.5	2.375	0.625 × 0.313	4	16	6
A100 [Note (4)]	10 × 8 × 13	33.88	39.88	14.5	16	9	18.75	24.75	0.875	32.5	2.375	0.625 × 0.313	4	18	6
A105 [Note (4)]	6 × 4 × 15	33.88	39.88	14.5	16	9	18.75	24.75	0.875	30.5	2.375	0.625 × 0.313	4	16	6
A110 [Note (4)]	8 × 6 × 15	33.88	39.88	14.5	16	9	18.75	24.75	0.875	32.5	2.375	0.625 × 0.313	4	18	6
A120 [Note (4)]	10 × 8 × 15	33.88	39.88	14.5	16	9	18.75	24.75	0.875	33.5	2.375	0.625 × 0.313	4	19	6
A105 [Note (4)]	6 × 4 × 17	33.88	39.88	14.5	16	9	18.75	24.75	0.875	30.5	2.375	0.625 × 0.313	4	16	6
A110 [Note (4)]	8 × 6 × 17	33.88	39.88	14.5	16	9	18.75	24.75	0.875	32.5	2.375	0.625 × 0.313	4	18	6
A120 [Note (4)]	10 × 8 × 17	33.88	39.88	14.5	16	9	18.75	24.75	0.875	33.5	2.375	0.625 × 0.313	4	19	6

NOTES:
(1) See para. 2.1. This extended length dimension *CPe* is a maximum value. Any dimension between the standard and maximum extended length is acceptable.
(2) *U* may be 1.625 in. diameter in A05 through A80 sizes to accommodate high torque values.
(3) Discharge flange may have tapped bolt holes.
(4) Suction flange may have tapped bolt holes.

Not for Resale

Copyright ASME International
Provided by IHS under license with ASME
No reproduction or networking permitted without license from IHS

Table 1 Pump Dimensions for Magnetic Drive Pumps (Cont'd)

Dimension Designation	Size: Suction × Discharge × Nominal Impeller Dia	Approximate Equivalent Dimension in mm													
		CP	*CPe* [Note (1)]	*D*	$2E_1$	$2E_2$	*F*	*Fe* [Note (1)]	*H*	*O*	*U* [Note (2)] Dia	*U* [Note (2)] Keyway	*V*, Min.	*X*	*Y*
AA	40 × 25 × 150	445	547	133	152	0	184	286	16	298	22.23	4.76 × 2.38	51	165	102
AB	80 × 40 × 150	445	547	133	152	0	184	286	16	298	22.23	4.76 × 2.38	51	165	102
AC [Note (3)]	80 × 50 × 150	445	547	133	152	0	184	286	16	298	22.23	4.76 × 2.38	51	165	102
AA [Note (3)]	40 × 25 × 200	445	547	133	152	0	184	286	16	298	22.23	4.76 × 2.38	51	165	102
AB [Note (3)]	80 × 40 × 200	445	547	133	152	0	184	286	16	298	22.23	4.76 × 2.38	51	165	102
A10	80 × 50 × 150	597	724	210	248	184	318	445	16	420	28.58	6.35 × 3.18	67	210	102
A50	80 × 40 × 200	597	724	210	248	184	318	445	16	425	28.58	6.35 × 3.18	67	216	102
A60	80 × 50 × 200	597	724	210	248	184	318	445	16	450	28.58	6.35 × 3.18	67	242	102
A70	100 × 80 × 200	597	724	210	248	184	318	445	16	490	28.58	6.35 × 3.18	67	280	102
A05 [Note (3)]	50 × 25 × 250	597	724	210	248	184	318	445	16	425	28.58	6.35 × 3.18	67	216	102
A50	80 × 40 × 250	597	724	210	248	184	318	445	16	425	28.58	6.35 × 3.18	67	216	102
A60	80 × 50 × 250	597	724	210	248	184	318	445	16	450	28.58	6.35 × 3.18	67	242	102
A70	100 × 80 × 250	597	724	210	248	184	318	445	16	490	28.58	6.35 × 3.18	67	280	102
A40	100 × 80 × 250	597	724	254	248	184	318	445	16	572	28.58	6.35 × 3.18	67	318	102
A80 [Note (4)]	150 × 100 × 250	597	724	254	248	184	318	445	16	597	28.58	6.35 × 3.18	67	343	102
A20 [Note (3)]	80 × 40 × 330	597	724	254	248	184	318	445	16	520	28.58	6.35 × 3.18	67	267	102
A30	80 × 50 × 330	597	724	254	248	184	318	445	16	546	28.58	6.35 × 3.18	67	292	102
A40	100 × 80 × 330	597	724	254	248	184	318	445	16	572	28.58	6.35 × 3.18	67	318	102
A80 [Note (4)]	150 × 100 × 330	597	724	254	248	184	318	445	16	597	28.58	6.35 × 3.18	67	343	102
A90 [Note (4)]	200 × 150 × 330	860	1 013	368	406	229	476	629	22	775	60.33	15.88 × 7.94	102	406	152
A100 [Note (4)]	250 × 200 × 330	860	1 013	368	406	229	476	629	22	826	60.33	15.88 × 7.94	102	457	152
A105 [Note (4)]	150 × 100 × 380	860	1 013	368	406	229	476	629	22	775	60.33	15.88 × 7.94	102	406	152
A110 [Note (4)]	200 × 150 × 380	860	1 013	368	406	229	476	629	22	826	60.33	15.88 × 7.94	102	457	152
A120 [Note (4)]	250 × 200 × 380	860	1 013	368	406	229	476	629	22	851	60.33	15.88 × 7.94	102	483	152
A105 [Note (4)]	150 × 100 × 430	860	1 013	368	406	229	476	629	22	775	60.33	15.88 × 7.94	102	406	152
A110 [Note (4)]	200 × 150 × 430	860	1 013	368	406	229	476	629	22	826	60.33	15.88 × 7.94	102	457	152
A120 [Note (4)]	250 × 200 × 430	860	1 013	368	406	229	476	629	22	851	60.33	15.88 × 7.94	102	483	152

NOTES:

(1) See para. 2.1. This extended length dimension *CPe* is a maximum value. Any dimension between the standard and maximum extended length is acceptable.

(2) *U* may be 41.28 mm diameter in A05 through A80 sizes to accommodate high torque values.

(3) Discharge flange may have tapped bolt holes.

(4) Suction flange may have tapped bolt holes.

Not for Resale

Copyright ASME International
Provided by IHS under license with ASME
No reproduction or networking permitted without license from IHS

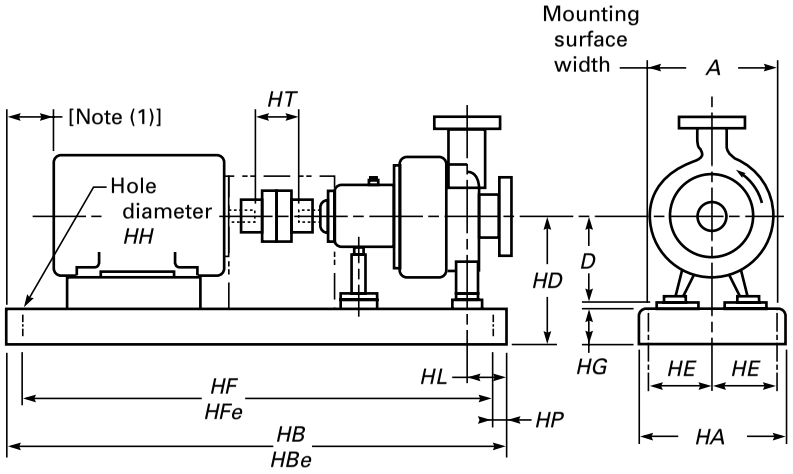

Table 2 Baseplate Dimensions for Magnetic Drive Pumps

Max NEMA Frame	Baseplate No. [Notes (2), (3)]		Dimension, in.															
			A,	*HA*,		*HBe*	*HT*,	*HD*, Max [Note (4)]						*HFe*	*HG*,			
	For *HB*	For *HBe*	Min.	Max	*HB*	[Note (3)]	Min.	*D* = 5.25	*D* = 8.25	*D* = 10	*D* = 14.50	*HE*	*HF*	[Note (3)]	Max	*HH*	*HL*	*HP*
184T	139	143	12	15	39	43	3.5	9	...	...	...	4.5	36.5	40.5	3.75	0.75	4.5	1.25
256T	148	152	15	18	48	52	3.5	10.50	...	...	...	6	45.5	49.5	4.13	0.75	4.5	1.25
326TS	153	157	18	21	53	57	3.5	12.88	...	...	...	7.5	50.5	54.5	4.75	0.75	4.5	1.25
184T	245	250	12	15	45	50	3.5	...	12	13.75	...	4.5	42.5	47.5	3.75	0.75	4.5	1.25
215T	252	257	15	18	52	57	3.5	...	12.38	14.13	...	6	49.5	54.5	4.13	0.75	4.5	1.25
286T	258	263	18	21	58	63	3.5	...	13	14.75	...	7.5	55.5	60.5	4.75	1	4.5	1.25
365T	264	269	18	21	64	69	3.5	...	13.88	14.75	...	7.5	61.5	66.5	4.75	1	4.5	1.25
405TS	268	273	22	26	68	73	3.5	...	14.88	14.88	...	9.5	65.5	70.5	4.75	1	4.5	1.25
449TS	280	285	22	26	80	85	3.5	...	15.88	15.88	...	9.5	77.5	82.5	4.75	1	4.5	1.25
286T	368	374	22	26	68	74	5	...	...	...	19.25	9.5	65.5	71.5	4.75	1	6.5	1.25
405T	380	386	22	26	80	86	5	...	...	...	19.25	9.5	77.5	83.5	4.75	1	6.5	1.25
449T	398	3,104	22	26	98	104	5	...	...	...	19.25	9.5	95.5	101.5	4.75	1	6.5	1.25

NOTES:

(1) Motor should not extend beyond the end of the baseplate.

(2) Baseplate number denotes pump frame 1, 2, or 3 and baseplate *HB* or *HBe* in inches.

(3) See para. 2.1. This extended length dimension *HBe* is a fixed value. Whenever the pump to be mounted has *CPe* greater than *CP*, the baseplate for *HBe* must be used.

(4) Includes 0.13 in. shimming allowance where motor height controls.

(Table 2 continues on next page)

Not for Resale

Copyright ASME International
Provided by IHS under license with ASME
No reproduction or networking permitted without license from IHS

Table 2 Baseplate Dimensions for Magnetic Drive Pumps (Cont'd)

Max NEMA Frame	Baseplate No. [Notes (2), (3)]		Approximate Equivalent Dimension in mm															
			A,	*HA*,		*HBe*	*HT*,	*HD*, Max [Note (4)]				*HE*	*HF*	*HFe*	*HG*,			
	For *HB*	For *HBe*	Min.	Max	*HB*	[Note (3)]	Min.	*D* = 133	*D* = 210	*D* = 254	*D* = 368			[Note (2)]	Max	*HH*	*HL*	*HP*
184T	139	143	305	381	991	1,993	89	229	...	...	...	114	927	1,029	95	19	114	32
256T	148	152	381	457	1,219	1,321	89	267	...	...	...	152	1,156	1,258	105	19	114	32
326TS	153	157	457	533	1,346	1,448	89	327	...	...	...	191	1,283	1,385	121	19	114	32
184T	245	250	305	381	1,143	1,270	89	...	305	349	...	114	1,080	1,207	95	19	114	32
215T	252	257	381	457	1,321	1,448	89	...	314	359	...	152	1,257	1,385	105	19	114	32
286T	258	263	457	533	1,473	1,600	89	...	330	375	...	191	1,410	1,537	121	25	114	32
365T	264	269	457	533	1,626	1,753	89	...	353	375	...	191	1,562	1,690	121	25	114	32
405TS	268	273	559	660	1,727	1,855	89	...	378	378	...	241	1,664	1,791	121	25	114	32
449TS	280	285	559	660	2,032	2,159	89	...	403	403	...	241	1,969	2,096	121	25	114	32
286T	368	374	559	660	1,727	1,880	127	...	...	...	489	241	1,664	1,817	121	25	165	32
405T	380	386	559	660	2,032	2,185	127	...	...	...	489	241	1,969	2,121	121	25	165	32
449T	398	3,104	559	660	2,489	2,642	127	...	...	...	489	241	2,426	2,579	121	25	165	32

NOTES:

(1) Motor should not extend beyond the end of the baseplate.

(2) *B*aseplate number denotes pump frame 1, 2, or 3 and baseplate *HB* or *HBe* in inches.

(3) See para. 2.1. This extended length dimension *HBe* is a fixed value. Whenever the pump to be mounted has *CPe* greater than *CP*, the baseplate for *HBe* must be used.

(4) Includes 3 mm shimming allowance where motor height controls.

Not for Resale

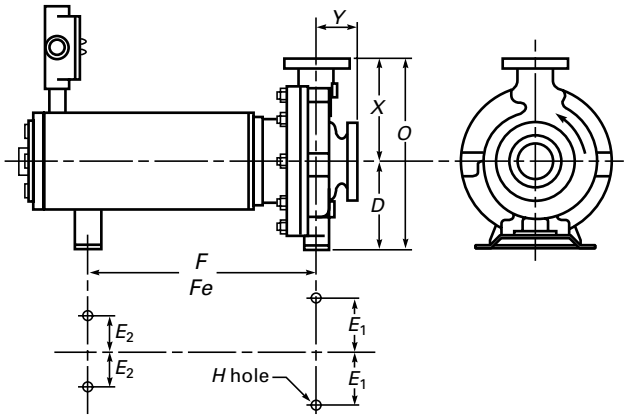

Table 3 Pump Dimensions for Canned Motor Pumps

Dimension Designation	Size: Suction × Discharge × Nominal Impeller Dia	Dimension, in. *D*	$2E_1$	$2E_2$	*F*	*Fe* [Note (1)]	*H*	*O*	*X*	*Y*
AA	1.5 × 1 × 6	5.25	6	6	12.5	17.5	0.625	11.75	6.5	4
AB	3 × 1.5 × 6	5.25	6	6	12.5	17.5	0.625	11.75	6.5	4
AC [Note (2)]	3 × 2 × 6	5.25	6	6	12.5	17.5	0.625	11.75	6.5	4
AA [Note (2)]	1.5 × 1 × 8	5.25	6	6	12.5	17.5	0.625	11.75	6.5	4
AB [Note (2)]	3 × 1.5 × 8	5.25	6	6	12.5	17.5	0.625	11.75	6.5	4
A10	3 × 2 × 6	8.25	9.75	7.25	12.5	17.5	0.625	16.5	8.25	4
A50	3 × 1.5 × 8	8.25	9.75	7.25	12.5	17.5	0.625	16.75	8.5	4
A60	3 × 2 × 8	8.25	9.75	7.25	12.5	17.5	0.625	17.75	9.5	4
A70	4 × 3 × 8	8.25	9.75	7.25	12.5	17.5	0.625	19.25	11	4
A05 [Note (2)]	2 × 1 × 10	8.25	9.75	7.25	12.5	17.5	0.625	16.75	8.5	4
A50	3 × 1.5 × 10	8.25	9.75	7.25	12.5	17.5	0.625	16.75	8.5	4
A60	3 × 2 × 10	8.25	9.75	7.25	12.5	17.5	0.625	17.75	9.5	4
A70	4 × 3 × 10	8.25	9.75	7.25	12.5	17.5	0.625	19.25	11	4
A40	4 × 3 × 10	10	9.75	7.25	12.5	17.5	0.625	22.5	12.5	4
A80 [Note (3)]	6 × 4 × 10	10	9.75	7.25	12.5	17.5	0.625	23.5	13.5	4
A20 [Note (2)]	3 × 1.5 × 13	10	9.75	7.25	12.5	17.5	0.625	20.5	10.5	4
A30	3 × 2 × 13	10	9.75	7.25	12.5	17.5	0.625	21.5	11.5	4
A40	4 × 3 × 13	10	9.75	7.25	12.5	17.5	0.625	22.5	12.5	4
A80 [Note (3)]	6 × 4 × 13	10	9.75	7.25	12.5	17.5	0.625	23.5	13.5	4
A90 [Note (3)]	8 × 6 × 13	14.5	16	9	18.75	24.75	0.875	30.5	16	6
A100 [Note (3)]	10 × 8 × 13	14.5	16	9	18.75	24.75	0.875	32.5	18	6
A105 [Note (3)]	6 × 4 × 15	14.5	16	9	18.75	24.75	0.875	30.5	16	6
A110 [Note (3)]	8 × 6 × 15	14.5	16	9	18.75	24.75	0.875	32.5	18	6
A120 [Note (3)]	10 × 8 × 15	14.5	16	9	18.75	24.75	0.875	33.5	19	6
A105 [Note (3)]	6 × 4 × 17	14.5	16	9	18.75	24.75	0.875	30.5	16	6
A110 [Note (3)]	8 × 6 × 17	14.5	16	9	18.75	24.75	0.875	32.5	18	6
A120 [Note (3)]	10 × 8 × 17	14.5	16	9	18.75	24.75	0.875	33.5	19	6

NOTES:

(1) See para. 2.1. This extended length dimension *Fe* is a maximum value. Any dimension between the standard and maximum extended length is acceptable.

(2) Discharge flange may have tapped bolt holes.

(3) Suction flange may have tapped bolt holes.

Copyright ASME International
Provided by IHS under license with ASME
No reproduction or networking permitted without license from IHS
Not for Resale

Table 3 Pump Dimensions for Canned Motor Pumps (Cont'd)

Dimension Designation	Size: Suction × Discharge × Nominal Impeller Dia	Approximate Equivalent Dimension in mm: *D*	$2E_1$	$2E_2$	*F*	*Fe* [Note (1)]	*H*	*O*	*X*	*Y*
AA	40 × 25 × 150	133	152	152	318	445	16	298	165	102
AB	80 × 40 × 150	133	152	152	318	445	16	298	165	102
AC [Note (2)]	80 × 50 × 150	133	152	152	318	445	16	298	165	102
AA [Note (2)]	40 × 25 × 200	133	152	152	318	445	16	298	165	102
AB [Note (2)]	80 × 40 × 200	133	152	152	318	445	16	298	165	102
A10	80 × 50 × 150	210	248	184	318	445	16	420	210	102
A50	80 × 40 × 200	210	248	184	318	445	16	425	216	102
A60	80 × 50 × 200	210	248	184	318	445	16	450	242	102
A70	100 × 80 × 200	210	248	184	318	445	16	490	280	102
A05 [Note (2)]	50 × 25 × 250	210	248	184	318	445	16	425	216	102
A50	80 × 40 × 250	210	248	184	318	445	16	425	216	102
A60	80 × 50 × 250	210	248	184	318	445	16	450	242	102
A70	100 × 80 × 250	210	248	184	318	445	16	490	280	102
A40	100 × 80 × 250	254	248	184	318	445	16	560	318	102
A80 [Note (3)]	150 × 100 × 250	254	248	184	318	445	16	597	343	102
A20 [Note (2)]	80 × 40 × 330	254	248	184	318	445	16	520	266	102
A30	80 × 50 × 330	254	248	184	318	445	16	546	292	102
A40	100 × 80 × 330	254	248	184	318	445	16	572	318	102
A80 [Note (3)]	150 × 100 × 330	254	248	184	318	445	16	597	343	102
A90 [Note (3)]	200 × 150 × 330	368	406	229	476	629	22	775	406	152
A100 [Note (3)]	250 × 200 × 330	368	406	229	476	629	22	826	457	152
A105 [Note (3)]	150 × 100 × 380	368	406	229	476	629	22	775	406	152
A110 [Note (3)]	200 × 150 × 380	368	406	229	476	629	22	826	457	152
A120 [Note (3)]	250 × 200 × 380	368	406	229	476	629	22	851	483	152
A105 [Note (3)]	150 × 100 × 430	368	406	229	476	629	22	775	406	152
A110 [Note (3)]	200 × 150 × 430	368	406	229	476	629	22	826	457	152
A120 [Note (3)]	250 × 200 × 430	368	406	229	476	629	22	851	483	152

NOTES:

(1) See para. 2.1. This extended length dimension *Fe* is a maximum value. Any dimension between the standard and maximum extended length is acceptable.

(2) Discharge flange may have tapped bolt holes.

(3) Suction flange may have tapped bolt holes.

Through bolt holes are preferred. When tapped holes are supplied, they shall be noted on the outline drawing. As an option, Class 300 flanges in accordance with ASME B16.5 or ASME B16.42 may be offered subject to manufacturers' casing pressure–temperature limitations. All pumps regardless of flange rating shall conform to the *X* and *Y* dimensions as shown in Tables 1 and 3.

4.3 Casing

4.3.1 Drain Connection Boss(es). The pump casing shall have boss(es) to provide for drain connection(s) in the lowest part of the casing. Boss size shall accommodate ½ in. NPT minimum. Boss(es) shall be drilled and tapped when specified by the customer.

4.3.2 Auxiliary Connection Boss(es). The suction and discharge nozzles shall have boss(es) for gage connections. Boss size shall accommodate ¼ in. NPT minimum, ½ in. NPT preferred. Boss(es) shall be drilled and tapped when specified by the customer.

4.3.3 Support. The casing shall be supported by feet beneath the casing or a suitable support between the casing and baseplate.

Copyright ASME International
Provided by IHS under license with ASME
No reproduction or networking permitted without license from IHS

Not for Resale

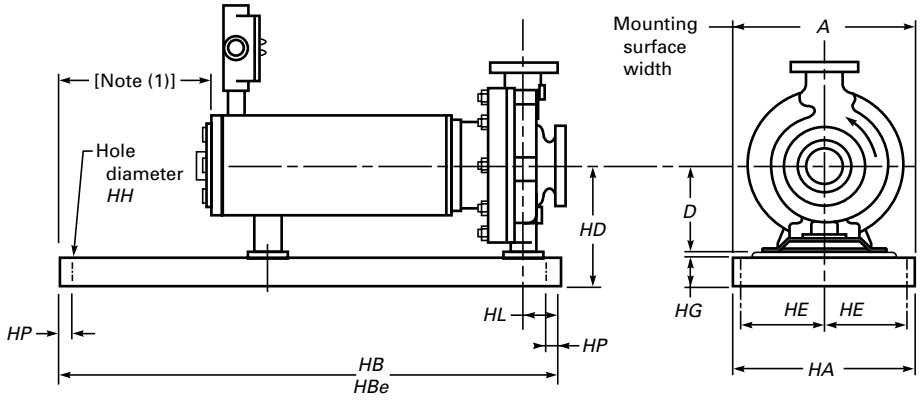

Table 4 Baseplate Dimensions for Canned Motor Pumps

Dimension Designation	Size Suction × Discharge × Nominal Impeller Dia	Dimension, in. *A*, Min. [Note (1)]	*HA*, Max [Note (1)]	*HB*, Max [Note (1)]	*HBe*, Max [Notes (1), (2)]	*HD*, Max [Note (1)]	*HE*	*HG*, Max [Note (1)]	*HH*	*HL*	*HP*
AA	1.5 × 1 × 6	12	15	39	43	9	4.5	3.75	0.75	4.5	1.25
AB	3 × 1.5 × 6	15	18	48	52	9	6	3.75	0.75	4.5	1.25
AC [Note (3)]	3 × 2 × 6	18	21	58	63	9	6	3.75	0.75	4.5	1.25
AA [Note (3)]	1.5 × 1 × 8	18	21	58	63	9	7.5	3.75	0.75	4.5	1.25
AB [Note (3)]	3 × 1.5 × 8	18	21	58	63	9	6	3.75	0.75	4.5	1.25
A10	3 × 2 × 6	18	21	58	63	12	7.5	4.75	1	4.5	1.25
A50	3 × 1.5 × 8	18	21	58	63	12	7.5	4.75	1	4.5	1.25
A60	3 × 2 × 8	18	21	64	69	13.88	7.5	4.75	1	4.5	1.25
A70	4 × 3 × 8	18	21	64	69	13.88	7.5	4.75	1	4.5	1.25
A05 [Note (3)]	2 × 1 × 10	18	21	58	63	13.88	7.5	4.75	1	4.5	1.25
A50	3 × 1.5 × 10	18	21	64	69	13.88	7.5	4.75	1	4.5	1.25
A60	3 × 2 × 10	18	21	64	69	13.88	7.5	4.75	1	4.5	1.25
A70	4 × 3 × 10	22	26	68	73	14.88	9.5	4.75	1	4.5	1.25
A40	4 × 3 × 10	22	26	80	85	15.88	9.5	4.75	1	4.5	1.25
A80 [Note (4)]	6 × 4 × 10	22	26	80	85	15.88	9.5	4.75	1	4.5	1.25
A20 [Note (3)]	3 × 1.5 × 13	22	26	80	85	15.88	9.5	4.75	1	4.5	1.25
A30	3 × 2 × 13	22	26	80	85	15.88	9.5	4.75	1	4.5	1.25
A40	4 × 3 × 13	22	26	80	85	15.88	9.5	4.75	1	4.5	1.25
A80 [Notes (3)(4)]	6 × 4 × 13	22	26	80	85	15.88	9.5	4.75	1	4.5	1.25
A90 [Notes (3)(4)]	8 × 6 × 13	22	26	80	85	19.5	9.5	4.75	1	4.5	1.25
A100 [Notes (3)(4)]	10 × 8 × 13	22	26	80	85	19.5	9.5	4.75	1	4.5	1.25
A105 [Note (4)]	6 × 4 × 15	22	26	80	85	19.5	9.5	4.75	1	4.5	1.25
A110 [Notes (3)(4)]	8 × 6 × 15	22	26	80	85	19.5	9.5	4.75	1	4.5	1.25
A120 [Notes (3)(4)]	10 × 8 × 15	22	26	80	85	19.5	9.5	4.75	1	4.5	1.25
A105 [Note (4)]	6 × 4 × 17	22	26	80	85	19.5	9.5	4.75	1	4.5	1.25
A110 [Note (4)]	8 × 6 × 17	22	26	80	85	19.5	9.5	4.75	1	4.5	1.25
A120 [Note (4)]	10 × 8 × 17	22	26	80	85	19.5	9.5	4.75	1	4.5	1.25

NOTES:

(1) Pump assembly shall not extend beyond the end of the baseplate.

(2) See para. 2.1. This extended length dimension *HBe* is a maximum value. Whenever the pump to be mounted has *Fe* greater than *F*, the baseplate for *HBe* must be used.

(3) Discharge flange may have tapped bolt holes.

(4) Suction flange may have tapped bolt holes.

Copyright ASME International
Provided by IHS under license with ASME
No reproduction or networking permitted without license from IHS
Not for Resale

Table 4 Baseplate Dimensions for Canned Motor Pumps (Cont'd)

Dimension Designation	Size Suction × Discharge × Nominal Impeller Dia	Approximate Equivalent Dimension in mm									
		A, Min. [Note (1)]	*HA*, Max [Note (1)]	*HB*, Max [Note (1)]	*HBe*, Max [Notes (1), (2)]	*HD*, Max [Note (1)]	*HE*	*HG*, Max [Note (1)]	*HH*	*HL*	*HP*
AA	40 × 25 × 150	305	381	991	1 092	229	114	95.3	19.1	114	31.8
AB	80 × 40 × 150	381	457	1 219	1 321	229	152	95.3	19.1	114	31.8
AC [Note (3)]	80 × 50 × 150	457	533	1 473	1 600	229	152	95.3	19.1	114	31.8
AA [Note (3)]	40 × 25 × 200	457	533	1 473	1 600	229	191	95.3	19.1	114	31.8
AB [Note (3)]	80 × 40 × 200	457	533	1 473	1 600	229	152	95.3	19.1	114	31.8
A10	80 × 50 × 150	457	533	1 473	1 600	305	191	95.3	25.4	114	31.8
A50	80 × 40 × 200	457	533	1 473	1 600	305	191	95.3	25.4	114	31.8
A60	80 × 50 × 200	457	533	1 626	1 753	353	191	121	25.4	114	31.8
A70	100 × 80 × 200	457	533	1 626	1 753	353	191	121	25.4	114	31.8
A05 [Note (3)]	50 × 25 × 250	457	533	1 473	1 600	353	191	121	25.4	114	31.8
A50	80 × 40 × 250	457	533	1 626	1 753	353	191	121	25.4	114	31.8
A60	80 × 50 × 250	457	533	1 626	1 753	353	191	121	25.4	114	31.8
A70	100 × 80 × 250	559	660	1 727	1 854	378	241	121	25.4	114	31.8
A40	100 × 80 × 250	559	660	2 032	2 159	403	241	121	25.4	114	31.8
A80 [Note (4)]	150 × 100 × 250	559	660	2 032	2 159	403	241	121	25.4	114	31.8
A20 [Note (3)]	80 × 40 × 330	559	660	2 032	2 159	403	241	121	25.4	114	31.8
A30	80 × 50 × 330	559	660	2 032	2 159	403	241	121	25.4	114	31.8
A40	100 × 80 × 330	559	660	2 032	2 159	403	241	121	25.4	114	31.8
A80 [Notes (3)(4)]	150 × 100 × 330	559	660	2 032	2 159	495	241	121	25.4	114	31.8
A90 [Notes (3)(4)]	200 × 150 × 330	559	660	2 032	2 159	495	241	121	25.4	114	31.8
A100 [Notes (3)(4)]	250 × 200 × 330	559	660	2 032	2 159	495	241	121	25.4	114	31.8
A105 [Note (4)]	150 × 100 × 380	559	660	2 032	2 159	495	241	121	25.4	114	31.8
A110 [Notes (3)(4)]	200 × 150 × 380	559	660	2 032	2 159	495	241	121	25.4	114	31.8
A120 [Notes (3)(4)]	250 × 200 × 380	559	660	2 032	2 159	495	241	121	25.4	114	31.8
A105 [Note (4)]	150 × 100 × 430	559	660	2 032	2 159	495	241	121	25.4	114	31.8
A110 [Note (4)]	200 × 150 × 430	559	660	2 032	2 159	495	241	121	25.4	114	31.8
A120 [Note (4)]	250 × 200 × 430	559	660	2 032	2 159	495	241	121	25.4	114	31.8

NOTES:

(1) Pump assembly shall not extend beyond the end of the baseplate.

(2) See para. 2.1. This extended length dimension *HBe* is a maximum value. Whenever the pump to be mounted has *Fe* greater than *F*, the baseplate for *HBe* must be used.

(3) Discharge flange may have tapped bolt holes.

(4) Suction flange may have tapped bolt holes.

4.3.4 Disassembly. The design shall permit back removal of the rotating element(s) from the casing without disturbing the suction and discharge connections. Separately coupled MDP units, with foot mounted drivers, shall also permit removal of the rotating element(s) without disturbing the driver. Tapped holes for jackscrews or equivalent means shall be provided to facilitate the safe disassembly and reassembly of the rotating element(s) from the casing and to avoid the necessity of drive wedges or prying implements.

4.3.5 Jackets. Jackets for heating or cooling the casing and/or rotating element are optional. Jackets shall be designed for a minimum operating pressure of 100 psig (690 kPa gage) at 340°F (170°C). Heating jackets may be required for jacket temperatures to 500°F (260°C) with a corresponding reduction in pressure. Sealed jackets for motor cooling shall have a minimum pressure rating of 50 psig (345 kPa gage).

Connections shall be $\frac{3}{8}$ in. NPT minimum, with $\frac{1}{2}$ in. NPT preferred.

When a jacket is to be used for heating by steam, the inlet connection shall be located at the top quadrant of the jacket, and the drain connection shall be located at the bottom portion of the jacket to prevent the formation

Copyright ASME International
Provided by IHS under license with ASME
No reproduction or networking permitted without license from IHS

Not for Resale

Table 5 Approximate Performance of Standard Pumps (50 Hz)

Dimension Designation	Size Suction × Discharge × Nominal Impeller Dia	1,450 rpm Capacity gpm	1,450 rpm Capacity m^3/h	1,450 rpm Total Head ft	1,450 rpm Total Head m	2,900 rpm Capacity gpm	2,900 rpm Capacity m^3/h	2,900 rpm Total Head ft	2,900 rpm Total Head m
AA	1.5 × 1 × 6	31	7.0	22	6.7	62	14.2	86	26.5
AB	3 × 1.5 × 6	62	14.2	22	6.7	125	28.3	86	26.5
AC	3 × 2 × 6	104	23.7	22	6.7	208	47.2	86	26.5
AA	1.5 × 1 × 8	42	9.4	44	13.3	83	18.9	174	52.9
AB	3 × 1.5 × 8	83	18.9	44	13.3	167	37.8	174	52.9
A10	3 × 2 × 6	104	23.7	22	6.7	208	47.2	86	26.5
A50	3 × 1.5 × 8	83	18.9	44	13.3	167	37.8	174	52.9
A60	3 × 2 × 8	125	28.3	44	13.3	250	56.7	174	52.9
A70	4 × 3 × 8	208	47.2	44	13.3	417	94.6	174	52.9
A05	2 × 1 × 10	42	9.4	61	18.6	83	18.9	243	74.1
A50	3 × 1.5 × 10	83	18.9	61	18.6	167	37.8	243	74.1
A60	3 × 2 × 10	125	28.3	61	18.6	250	56.7	243	74.1
A70	4 × 3 × 10	250	56.7	61	18.6	500	113.4	243	74.1
A40	4 × 3 × 10	417	94.6	61	18.6	541	123.1	243	74.1
A80	6 × 4 × 10	830	188.6	61	18.6	1,077	244.8	243	74.1
A20 [Note (1)]	3 × 1.5 × 13	166	37.7	104	31.7	331	73.2	412	123.6
A30 [Note (1)]	3 × 2 × 13	250	56.7	104	31.7	456	103.6	378	115.2
A40 [Note (1)]	4 × 3 × 13	500	113.6	104	31.7	704	160.0	275	83.3
A80	6 × 4 × 13	911	207.0	104	31.7	...	...	...	...
A20	3 × 1.5 × 13	125	28.3	104	31.7	...	...	...	...
A30	3 × 2 × 13	250	56.7	104	31.7	...	...	...	...
A40	4 × 3 × 13	417	94.6	104	31.7	...	...	...	...
A80	6 × 4 × 13	833	189.2	104	31.7	...	...	...	...
A90	8 × 6 × 13	1,666	378.2	94	28.7	...	...	...	...
A100	10 × 8 × 13	2,917	662.2	94	28.7	...	...	...	...
A105	6 × 4 × 15	1,250	284.0	139	42.4	...	...	...	...
A110	8 × 6 × 15	1,666	378.2	139	42.4	...	...	...	...
A120	10 × 8 × 15	2,917	662.2	139	42.4	...	...	...	...
A105	6 × 4 × 17	1,500	341	174	53	...	...	...	...
A110	8 × 6 × 17	2,500	568	174	53	...	...	...	...
A120	10 × 8 × 17	3,333	757	156	45	...	...	...	...

GENERAL NOTE: This Standard does not cover exact hydraulic performance of pumps. Information on approximate head and capacity at the best efficiency point for standard pumps is for general information only. Consult manufacturers regarding hydraulic performance data for specific applications.

NOTE:

(1) Maximum impeller diameter may be limited due to limitations of pump's rotor system.

of water pockets. Jackets for water cooling shall have a drain for freeze protection.

4.3.6 Gaskets. All assembly gaskets shall be confined on the atmospheric side to prevent blowout. Design shall consider thermal cycling which may occur as a condition of service.

4.3.7 Bolting. The pressure-containing fastener load shall not exceed bolt proof load at 1.5 times the rated working pressure, considering all loading conditions. Bolt proof load shall be determined in accordance with ASTM F 606 (Section 15, Volume 15.08).

4.4 Impeller

4.4.1 Types. Impellers of open, semiopen, and closed designs are optional.

4.4.2 Balance. Impellers shall meet ISO 1940, Grade G 6.3 after final machining.

Copyright ASME International
Provided by IHS under license with ASME
No reproduction or networking permitted without license from IHS
Not for Resale

Table 6 Approximate Performance of Standard Pumps (60 Hz)

Dimension Designation	Size Suction × Discharge × Nominal Impeller Dia	1,750 rpm Capacity gpm	1,750 rpm Capacity m^3/h	1,750 rpm Total Head ft	1,750 rpm Total Head m	3,500 rpm Capacity gpm	3,500 rpm Capacity m^3/h	3,500 rpm Total Head ft	3,500 rpm Total Head m
AA	1.5 × 1 × 6	37	8.4	32	9.7	75	17.0	125	38.1
AB	3 × 1.5 × 6	75	17.0	32	9.7	150	34.0	125	38.1
AC	3 × 2 × 6	125	28.4	32	9.7	250	56.7	125	38.1
AA	1.5 × 1 × 8	50	11.3	63	19.2	100	22.7	250	76.2
AB	3 × 1.5 × 8	100	22.7	63	19.2	200	45.4	250	76.2
A10	3 × 2 × 6	125	28.4	32	9.7	250	56.7	125	38.1
A50	3 × 1.5 × 8	100	22.7	63	19.2	200	45.4	250	76.2
A60	3 × 2 × 8	150	34.0	63	19.2	300	68.1	250	76.2
A70	4 × 3 × 8	250	56.7	63	19.2	500	113.5	250	76.2
A05	2 × 1 × 10	50	11.3	88	26.8	100	22.7	350	106.7
A50	3 × 1.5 × 10	100	22.7	88	26.8	200	45.2	350	106.7
A60	3 × 2 × 10	150	34.0	88	26.8	300	68.1	350	106.7
A70	4 × 3 × 10	300	68.1	88	26.8	600	136.2	350	106.7
A40	4 × 3 × 10	500	113.6	88	26.8	650 [Note (2)]	147.7	350	106.7
A80	6 × 4 × 10	1,000	227.0	88	26.8	1,300 [Note (2)]	227.0	350	106.7
A20 [Note (1)]	3 × 1.5 × 13	200	43.4	150	45.7	400 [Note (2)]	90.8	600	182.6
A30 [Note (1)]	3 × 2 × 13	300	68.1	150	45.7	500 [Note (2)]	114.0	550	167.6
A40 [Note (1)]	4 × 3 × 13	600	136.4	150	45.7	850 [Note (2)]	93.2	400	121.9
A80	6 × 4 × 13	1,100	250.0	150	45.7	...	...	...	...
A90	8 × 6 × 13	2,000	454.0	135	41.1	...	...	...	...
A100	10 × 8 × 13	3,500	794.5	135	41.1	...	...	...	...
A105	6 × 4 × 15	1,500	341.0	200	61.0	...	...	...	...
A110	8 × 6 × 15	2,000	454.0	200	61.0	...	...	...	...
A120	10 × 8 × 15	3,500	794.5	200	61.0	...	...	...	...
A105	6 × 4 × 17	1,800	409.0	250	76.0	...	...	...	...
A110	8 × 6 × 17	3,000	682.0	250	76.0	...	...	...	...
A120	10 × 8 × 17	4,000	909.0	225	69.0	...	...	...	...

GENERAL NOTE: This Standard does not cover exact hydraulic performance of pumps. Information on approximate head and capacity at the best efficiency point for standard pumps is for general information only. Consult manufacturers regarding hydraulic performance data for specific applications.

NOTES:

(1) Maximum impeller diameter may be limited due to limitations of pump's rotor system.

(2) Liquid end may be modified for this condition.

4.4.3 Attachment. For MDP rotating shaft designs, the impeller shall be keyed, threaded, or otherwise permanently fixed to the shaft. Threads shall be designed to tighten by correct rotation. For CMP rotating shaft designs, the impeller shall be keyed or otherwise permanently fixed to the shaft. For stationary shaft designs, the impeller may be an integral part of the rotor assembly. Other attachment designs may be used with the approval of the purchaser.

4.5 Internal Drive Assembly

4.5.1 Mounting. For rotating shaft designs, the inner magnet assembly shall be positively attached to the impeller drive shaft.

4.5.2 Balance. The rotor assembly or inner magnetic assembly shall be balanced in accordance with ISO 1940, Grade G 6.3.

4.5.3 Critical Speed. The first lateral critical speed of the rotating assembly shall be at least 120% of the maximum operating speed.

4.5.4 Fillets and Radii. All shaft shoulder radii shall be as large as practical and finished to reduce additional stress risers.

4.5.5 Internal Drive Assembly Bearings

4.5.5.1 Bearing Design. The bearing system shall be capable of absorbing forward and reverse thrust as

Copyright ASME International
Provided by IHS under license with ASME
No reproduction or networking permitted without license from IHS
Not for Resale

Table 7 Minimum Continuous Flow

Dimension Designation	Size: Suction × Discharge × Nominal Impeller Diameter	Minimum Continuous Flow, % BEP [Note (1)]: 3500/2900 rpm 60/50 Hz	1750/1450 rpm 60/50 HZ
AA	1.5 × 1 × 6	15	10
AB	3 × 1.5 × 6	15	10
AC	3 × 2 × 6	20	10
AA	1.5 × 1 × 8	20	10
AB	3 × 1.5 × 8	20	10
A10	3 × 2 × 6	20	10
A50	3 × 1.5 × 8	20	10
A60	3 × 2 × 8	20	10
A70	4 × 3 × 8	20	10
A05	2 × 1 × 10	25	10
A50	3 × 1.5 × 10	25	10
A60	3 × 2 × 10	30	15
A70	4 × 3 × 10	30	15
A40	4 × 3 × 10	30	15
A80	6 × 4 × 10	40	20
A20	3 × 1.5 × 13	30	15
A30	3 × 2 × 13	40	15
A40	4 × 3 × 13	40	40
A80	6 × 4 × 13	...	40
A90	8 × 6 × 13	...	40
A100	10 × 8 × 13	...	40
A105	6 × 4 × 15	...	50
A110	8 × 6 × 15	...	50
A120	10 × 8 × 15	...	50
A105	6 × 4 × 17	...	50
A110	8 × 6 × 17	...	50
A120	10 × 8 × 17	...	50

NOTE:
(1) Limits refer to actual hydraulic performance, not the approximate values in Tables 5 and 6. Consult manufacturers regarding hydraulic performance data for specific applications.

well as radial thrust. Bearings shall be designed and applied considering fluid characteristics, unit loading, corrosion, erosion, wear, heat transfer, fits, and friction characteristics.

4.5.5.2 Bearing Loading. Bearing loading, alignment, shaft deflection, surface finish, and wear-in characteristics of bearing materials shall be taken into account to prevent local surface failure.

4.5.5.3 Journals. The journals may be separate sleeves, finished shaft surface, or hard faced/coated shaft areas for both rotating and non-rotating shaft designs.

4.5.5.4 Clearance. Materials used for journal sleeves, thrust collars, and bearings often have significantly different thermal expansion characteristics compared to shaft and other mating parts. Application guidelines and limits shall be established by the manufacturers for specific designs to avoid breakage or looseness under specified operating temperatures.

4.5.5.5 Lubrication. Lubrication and/or cooling of the bearings shall be by the liquid pumped or by a clean, compatible, external fluid injection.

4.5.5.6 Heat Input. The bearings shall be provided with adequate fluid circulation and pressure that considers the maximum heat input of the drive assembly (including bearing friction) in relation to the fluid-specific gravity, the fluid-specific heat, fluid viscosity, laminar flow, turbulent flow, and vapor pressure. When requested, the manufacturers shall provide the temperature rise, and minimum pressure at that temperature, of the internal circulated fluid at operating points specified by the purchaser.

4.5.5.7 Bearing Environment. The design shall provide for removal of air or other noncondensables. The purchaser shall advise manufacturers of all changes in phase, solid content, or viscosity that may occur to the process fluid due to a change in temperature and/or pressure.

4.5.5.8 Filtration. When conditions of service require filtration of bearing lubricating fluid, a self-cleaning internal design may be used. If external filtration is required, the filter system should allow for indicating when filter change is required. Loss of flow to drive section shall be avoided.

4.6 Containment Design

4.6.1 Primary Pressure Containment. The containment shell and liner shall be the primary means of sealing and as a minimum shall be manufactured of a material equal to or higher in corrosion resistance than the pump casing.

4.6.1.1 Magnetic Drive Pump. The magnetic drive pump metallic primary and/or secondary containment shell(s) shall be designed in accordance with the table of allowable stress levels for the selected materials and the equations for the minimum required thickness as outlined in Section VIII, Division 1, of the ASME Boiler and Pressure Vessel Code. The shell may be thinner than the absolute minimum thickness stated in para. UG-16(b) of the Code.

Section VIII, Division 2, of the Code may be utilized in lieu of Division 1 for design. The manufacturer shall indicate whether Division 1 or Division 2 was used.

Alternative containment shell materials (including nonmetallic) and/or designs, may be considered to obtain benefits such as reduction of eddy current heating

--`,,```,,,,````-`-`,,`,,`,`,,`---

Copyright ASME International
Provided by IHS under license with ASME
No reproduction or networking permitted without license from IHS

Not for Resale

and losses. However, because some nonmetallic shells may have temperature and/or pressure limits below that of the casing, alternate materials and designs are subject to approval by the purchaser.

4.6.2 Secondary Control or Secondary Containment. It will be desirable in some installations to have a back-up to control or contain the pumpage in the event that the primary pressure containment (containment shell of MDP or liner of CMP) should rupture. There are two basic methods for this secondary protection.

One method is to provide structure surrounding the primary pressure containment that would confine liquid release through the primary pressure containment but not completely contain it. Some leakage would be permitted through the secondary structure but a rapid release of liquid would be prevented. This method is called Secondary Control.

A second method is to provide structure surrounding the primary pressure containment that would fully contain all liquid released through the primary pressure containment. No leakage is permitted through the secondary structure. This method is called Secondary Containment.

In the event of leakage through the primary pressure containment, for either of the methods above, operation of the pump shall be immediately discontinued.

The purchaser shall be responsible for providing shutdown devices and procedures required for safety.

When specified, one of the following designs to control any leakage from the containment shell or the liner of the primary pressure containment shall be provided by the manufacturer.

4.6.2.1 Secondary Control

(a) Any leakage through the primary containment shall be minimized and safely directed by a boundary made up of devices, including a secondary pressure casing capable of maximum design pressure.

(b) The secondary control shall be drainable to a residual of a maximum of 2 cu. in. (30 ml) or to a value agreed upon by the user and the manufacturer.

(c) The secondary control shall be provided with flush and drain connections.

4.6.2.2 Secondary Containment

(a) Any leakage through the primary containment shall be contained by secondary containment at the maximum allowable working pressure for a minimum of 48 hr.

(b) The secondary containment shall be drainable to a residual of a maximum of 2 cu. in. (30 ml) or to a value agreed upon by the user and the manufacturer.

(c) The secondary containment shall be provided with flush and drain connections.

4.6.2.2.1 Secondary Containment Verification. When specified, a means for periodically checking the secondary containment, for sealing capability, shall be provided by the manufacturer.

4.6.3 Draining. All pumped fluid-containing areas, including vendor-supplied piping, shall be drainable to a residual of a maximum of 2 cu. in. (30 ml), or to a value agreed upon by the manufacturer and purchaser, and shall be suitable for flushing before disassembly.

4.6.4 Monitoring. Provision shall be available to allow for instrumentation to monitor containment shell temperature of magnetic drive pumps.

4.7 External Bearings (MDP)

4.7.1 Bearing Design. Two antifriction bearing assemblies shall be provided. The bearing assemblies shall be designed to withstand radial and axial thrust within the pump design region of para. 5.1.6.1.

4.7.2 Bearing Life. Bearings shall be selected in accordance with ANSI/ABMA-9, ANSI/ABMA-11, and ISO 281/1. The minimum L'_{10h} bearing life shall be 17,500 hr for all standard and optional arrangements of bearings, lubrication, shafts, covers, and sealing.

4.7.3 Sealing. The frame shall be constructed to protect the bearings from water, dust, and other contaminants.

4.7.4 Lubrication. Lubrication may be oil or grease. When oil lubrication is supplied, the frame shall be provided with a level indicator which is capable of optionally being installed on either or both sides of the frame. A constant level oil feed regulator shall also be available, and when provided, be set initially by the manufacturer for the proper level during operation. The proper oil level shall be indicated on the outside of the frame. Other methods of lubrication may be specified, and when provided, the necessary additional taps shall be provided.

4.7.5 Drain. The frame shall be provided with a tapped and plugged drain hole at its lowest point when oil lubrication is supplied. When replacement grease is supplied, a means for grease relief shall be provided.

4.8 Stator Assembly (CMP)

4.8.1 Stator Windings. The stator windings shall be protected by corrosion-resistant liner suitable for the specified conditions.

4.8.2 Oil Filled Stators. Oil filled stators shall have a provision for safe containment of any leakage of the process fluid past the primary containment liner. When expansion tanks are used, they shall be designed to contain the maximum allowable working pressure for a minimum of 48 hr unless longer containment times are specified.

--`,,```,,,,````-`-`,,`,,`,`,,`---

Copyright ASME International
Provided by IHS under license with ASME
No reproduction or networking permitted without license from IHS

Not for Resale

The manufacturer must notify the user of any possible leak paths in the event of a primary containment liner failure.

4.8.3 Temperature Rating. Motor stator windings shall be designed to operate at or below the temperature values established for the grade of insulation in accordance with IEEE 117.

4.8.4 Motor Design Life. Motor sizing, stator insulation rating, cooling fluid temperature and flow, thermal isolation, and use of jackets or heat exchangers shall be designed and selected to provide a minimum of 40,000 hr design life at specified operating conditions.

4.8.5 Thermal Protection. Thermal protection is to be provided and the manufacturer shall advise the temperature setting and supply the applicable wiring diagrams.

4.8.6 Hazardous Locations. Motors, electrical components, and electrical installations shall be suitable for the area electrical classification (Class, Group, and Division), as well as national and local codes as specified by the purchaser.

4.9 Outer Magnet Assembly (MDP)

4.9.1 Mounting. The outer magnet assembly shall be positively driven by the pump drive shaft when separately coupled, or the motor shaft when close coupled, and shall have sufficient shaft engagement to insure that the axis of the magnet assembly is the same as the axis of the shaft.

4.9.2 Corrosion Resistance. The surfaces of ferrous materials of the outer carrier, frame, and magnets shall be sealed or coated to protect these surfaces from corrosion.

4.9.3 Balance. The outer magnet assembly shall be balanced to a minimum ISO 1940, Grade G 6.3.

4.9.4 Critical Speed. The first lateral critical speed of the rotating assembly shall be at least 120% of the maximum operating speed.

4.9.5 Fillets and Radii. All shaft shoulder radii shall be as large as practical and finished to reduce additional stress risers.

4.10 Materials of Construction

The identifying material of a pump shall be that of which the major pumpage-wetted parts are constructed. Pumps should be available in the following materials of construction.

Material	Material Specification
Cast ductile iron	ASTM A 395
Cast carbon steel	ASTM A 216 Grade WCB
Cast high alloy steel	
(similar to 316 stainless steel)	ASTM A 744 Grade CF8M
(similar to 316L stainless steel)	ASTM A 744 Grade CF3M
(similar to Alloy 20)	ASTM A 744 CN7M
Cast Cr, Mo, Ni stainless steel	ASTM A 494
Wrought Cr, Mo, Ni stainless steel	ASTM B 575
Hastelloy C	
Cast	ASTM A 494 Grade CW12MW
Wrought	ASTM B 334 or B 575
Other	Optional

No repair by plugging, peening, or impregnation is allowed on any pressure-containing, wetted metal parts.

4.11 Corrosion Allowance

The corrosion allowance for all wetted primary pressure-containing parts shall be agreed upon between purchaser and manufacturer by consideration of corrosion rates for fluids and materials involved.

4.12 Direction of Rotation

Direction of rotation shall be clockwise when viewed from the driver end of the pump. An arrow showing the direction of rotation shall be provided, either cast on the casing or stamped on a plate of durable construction affixed to the pump in a prominent location.

4.13 Dimensions

Pump dimensions shall conform to Table 1 or 3. Baseplate dimensions shall conform to Table 2 or 4.

4.14 Miscellaneous Design Features

4.14.1 Safety Guards. As a minimum, a coupling guard in accordance with ASME B15.1 shall be furnished on all units that include a pump and driver mounted on a common baseplate, where there is a coupling that would otherwise present a safety hazard. Local regulations may require additional guards.

4.14.2 Threads. All threaded parts, such as bolts, nuts, and plugs, shall conform to ANSI standards.

4.14.3 Lifting Rings. A lifting ring or other equivalent device shall be provided to facilitate handling the frame and associated assembly if its mass exceeds 51 lb (27 kg). For magnetic drive pumps on bedplates, eyebolts on motors and/or pumps are not suitable for lifting the entire pump and motor assembly. The pump manufacturers' manual shall provide lifting instructions.

4.14.4 Tapped Openings. All tapped openings which may be exposed to the pumped fluid under pressure (including the secondary containment where furnished) shall be plugged with threaded metal plugs. Plugs normally in contact with the pumped fluid shall be of the

Copyright ASME International
Provided by IHS under license with ASME
No reproduction or networking permitted without license from IHS
Not for Resale

same material as the case, except that carbon steel plugs may be used on ductile iron pumps. Threaded plugs shall not be used in the heating or cooling jackets; instead, snap-in plugs or waterproof tape shall be used to relieve possible pressure accumulation until piping is installed.

4.14.5 Venting. The entire unit including casing, drive section, and piping supplied by the manufacturer shall be self-venting or furnished with vent connections.

4.14.6 Identification. The manufacturers' part identification number and material designation shall be cast, clearly die stamped, or etched on the casing, cover, impeller, and containment shell. The manufacturers shall provide identification on the product lubricated bearings (tagging is acceptable) to assist in parts identification prior to assembly.

4.14.7 Installation. All equipment provided shall be designed for unsheltered outdoor installation and operation at specified ambient temperatures.

4.14.8 Frame (MDP). The frame shall be designed to resist a torque at least as high as the decoupling torque strength of the largest drive magnets available for that frame.

The frame, when it clamps the rear cover plate to the pump casing, shall be made of a suitable ductile material such as cast ductile iron or cast carbon steel.

4.14.9 Baseplate Rigidity (MDP). Baseplates shall be designed according to ANSI/HI 1.3, Section 1.3.5. Baseplates, for separately coupled pumps, which are to be freestanding (foot or spring supported rather than held by anchor bolts and grouted) shall be so structurally rigid as to limit movement of the driver shaft relative to the pump drive shaft to 0.002 in. (0.05 mm) parallel offset when the driver torque of nameplate horsepower is applied.

4.15 Monitoring Devices

4.15.1 Description. Devices or instruments which indicate or control the condition of the sealless pump to preclude misoperation or damage to the unit should be available when specified.

4.15.2 Temperature Probe. Sensing of temperature of the recirculation fluid and/or the containment shell should be available when specified.

4.15.3 Bearing Wear Detector. A device to detect axial and radial wear for a minimum of one bearing should be available when specified.

4.15.4 Vibration. Receptacles, such as a machined conical recess for handheld vibration probes or tapped bosses for permanently installed probes, should be available when specified. The location on separately coupled magnetic drive pumps shall be by the ball bearings on the frame in the horizontal position. For canned motor pumps, the location shall be on the stator band in the horizontal and vertical positions.

4.15.5 Motor. A device that monitors the motor should be available when specified. This device may detect one or more of the following:

(a) power;
(b) phase imbalance;
(c) rotation;
(d) under current;
(e) over current;
(f) single phasing; and
(g) short circuit or internal malfunction.

4.15.6 Circulation Fluid. A device to monitor the flow rate of the circulation fluid should be available when specified. This requirement will only apply to pumps with external circulation and does not apply to internal circulated pumps.

4.15.7 Direction of Rotation Indicator (CMP). A direction of rotation indicator should be available when specified.

4.15.8 Leak Detection. A device to detect leakage from the primary containment shell or liner should be available when specified.

5 GENERAL INFORMATION

5.1 Application

Application of sealless pumps requires more consideration than that for conventional centrifugal pumps. It is recommended that anyone applying this type of equipment read para. 5.3 of ANSI/HI 5.1 through 5.6.

5.1.1 Terminology. Pump application and application terminology shall be in accordance with ANSI/HI 5.1 through 5.6.

5.1.2 Flange Loading. Allowable flange loading imposed by the piping shall be in accordance with ANSI/HI 9.6.2.

5.1.3 Sound. The maximum sound pressure level produced by the pump and driver shall comply with the limit specified by the customer. Tests, if specified, shall be conducted in accordance with ANSI/HI 9.1/9.5, Section 9.4. For separately coupled magnetic drive pumps, driver and pump noise data must be determined separately.

5.1.4 Vibration. The vibration level measured on the stator/rear bearing housing (CMP) or the frame (MDP) at the manufacturer's test facility at the rated speed ±5% and rated flow ±5% shall not exceed twice the limits shown in Fig. 9.6.4.4 of ANSI/HI 9.6.4.

5.1.5 Hydraulic Coverage. Tables 5 and 6 show the approximate hydraulic coverage for 50 and 60 Hz.

Copyright ASME International
Provided by IHS under license with ASME
No reproduction or networking permitted without license from IHS

Not for Resale

5.1.6 Operating Region

5.1.6.1 Design Region. Pumps shall be designed to operate continuously between 110% of best efficiency flow and the minimum flows shown in Table 7, unless specifically noted otherwise by the manufacturer, and meet the requirements of para. 5.1.4 (vibration) when pumping water at ambient conditions.

CAUTION: The values in Table 7 do not consider minimum thermal flow for a specific installation, therefore, the practical minimum operating flow may be higher than shown. Pumpage is heated as it goes through a pump and the minimum thermal flow is that where the temperature rises enough through the pump that recirculation of some of the flow reduces the available net positive suction head below that required by the pump, resulting in cavitation. Refer to ANSI/HI 1.3 for detailed application information.

5.1.6.2 NPSH Margin. An operating NPSH margin (NPSHA>NPSHR) is necessary to ensure satisfactory operation. A margin of 3 ft (0.9 m) or a margin ratio of (NPSHA/NPSHR) 1.2, whichever yields the greater difference, is often adequate. Refer to ANSI/HI 9.6.1 for additional application information.

5.2 Tests

5.2.1 Hydrostatic

5.2.1.1 Standard Hydrostatic. After machining, all pressure-containing parts shall be hydrostatically tested for 10 min. minimum with water at 1.5 times the maximum design pressure corresponding to 100°F (38°C) for the material of construction used.

NOTE: The pressure rating of jackets may not be the same as required for pumpage-containing parts.

When secondary control or secondary containment is specified, the following hydrostatic testing must also be performed. The secondary containment components, or in the case of secondary control, the secondary pressure casing, shall be hydrostatically tested in accordance with para. 1.6.4 of ANSI/HI 1.6 or pneumatic tested in accordance with ND-6112 of the ASME Boiler and Pressure Vessel Code, Section III, Division 1, Subsection ND.

5.2.1.2 Assembled Pump Hydrostatic Test. When specified, the assembled pump test shall be in accordance with para. 1.6.4 of ANSI/HI 1.6.

5.2.2 Hermetic Integrity Test. When specified, a hermetic integrity test shall be performed on the pump unit after final assembly. Prior to testing, all liquid shall be removed from all internal cavities.

CAUTION: Wetted material moisture retention characteristics should be reviewed against the application prior to testing. No disassembly is permitted after this test. This test shall be performed in accordance with para. 5.6.3 of ANSI/HI 5.1 through 5.6.

5.2.3 Performance Test. When performance tests are required, they shall be conducted in accordance with ANSI/HI 1.6, level "A." A complete written record of the relevant test information including performance curves, the date of the tests, and the signature of the person(s) responsible for conducting the tests shall be delivered as part of the pump documentation.

5.2.3.1 Mechanical Integrity Test. When specified, a mechanical integrity test shall be performed on the pump to demonstrate that it will operate mechanically as designed. This test is intended to detect mechanical interferences, ball bearing defects, and bushing bearing(s) defects. This test shall be performed in accordance with para. 5.6.4 of ANSI/HI 5.1 through 5.6. This test is included in the optional performance test.

5.2.3.2 Net Positive Suction Head Required (NPSHR) Test. When specified, an NPSHR test shall be performed in accordance with para. 1.6.6 of ANSI/HI 1.6. When this test is specified, the performance test must also be specified.

5.2.3.3 Winding Integrity Test for Canned Motor Pumps. The motor test shall be conducted in accordance with para. 5.6.5 of ANSI/HI 5.1 through 5.6.

5.2.4 Performance Curves. Published performance curves shall be based on tests conducted in accordance with para. 1.6.5 of ANSI/HI 1.6.

5.3 Nameplates

The nameplate(s) is to be of 24 US Standard Gauge (minimum) AISI 300 series stainless steel and shall be securely attached to the pump. It shall include pump model, ANSI standard dimension designation, serial number, size, impeller diameter installed, material of construction, maximum design pressure for 100°F (38°C), maximum allowable horsepower, and rated speed. Canned motor pump nameplates shall also include full load motor data.

6 REFERENCES

The following is a list of standards and specifications referenced in this Standard.

ANSI/ABMA 9, Load Ratings and Fatigue Life for Ball Bearings

ANSI/ABMA 11, Load Ratings and Fatigue Life for Roller Bearings

Publisher: American Bearing Manufacturers Association, Inc. (ABMA), 2025 M Street, NW, Washington, DC 20036

ASME B15.1, Safety Standard for Mechanical Power Transmission Apparatus

ASME B16.42, Ductile Iron Pipe Flanges and Flanged Fittings

ASME B16.5, Pipe Flanges and Flanged Fittings

1992 ASME Boiler and Pressure Vessel Code, including addenda through December 31, 1994, Section III, Division 1, Subsection ND

Copyright ASME International
Provided by IHS under license with ASME
No reproduction or networking permitted without license from IHS

Not for Resale

1992 ASME Boiler and Pressure Vessel Code, including addenda through December 31, 1994, Section VIII, Divisions 1 and 2

Publisher: The American Society of Mechanical Engineers (ASME International), Three Park Avenue, New York, NY 10016-5990; Order Department, 22 Law Drive, Box 2300, Fairfield, NJ 07007-2300

ASTM A 216/A 216M, Standard Specification for Steel Castings, Carbon, Suitable for Fusion Welding, for High-Temperature Service

ASTM A 395, Standard Specification for Ferritic Ductile Iron Pressure-Retaining Castings for Use at Elevated Temperatures

ASTM A 494, Nickel and Nickel Alloy Castings

ASTM A 536, Standard Specification for Ductile Iron Castings

ASTM A 744/A 744M, Standard Specification for Castings, Iron-Chromium-Nickel, Corrosion Resistant, for Severe Service

ASTM B 575, Low Carbon Nickel-Mo-Cr and Low C Ni-Cr-Mo Alloy Plate, Sheet, and Strip

ASTM F 606, Standard Test Methods for Determining the Mechanical Properties of Externally and Internally Threaded Fasteners, Washers, and Rivets

Publisher: American Society for Testing and Materials (ASTM), 100 Barr Harbor Drive, West Conshohocken, PA 19428-2959

ANSI/HI 1.1 through 1.5, Centrifugal Pumps for Nomenclature, Definitions, Application, and Operation

ANSI/HI 1.6, Centrifugal Pump Tests

ANSI/HI 5.1 through 5.6, Sealless Pumps for Nomenclature, Definitions, Applications, Operation, and Test

ANSI/HI 9.1 through 9.5, Pumps — General Guidelines

ANSI/HI 9.6.1, Centrifugal and Vertical Pumps for NPSH Margin

ANSI/HI 9.6.2, Centrifugal and Vertical Pumps for Allowable Nozzle Loads

ANSI/HI 9.6.4, Centrifugal and Vertical Pumps for Vibration Measurements and Allowable Values

Publisher: Hydraulic Institute (HI), 9 Sylvan Way, Suite 180, Parsippany, NJ 07054-3802

IEEE 117, Standard Test Procedure for Evaluation of Systems of Insulating Materials for Random-Wound AC Electric Machinery

Publisher: Institute of Electrical and Electronics Engineers (IEEE), 445 Hoes Lane, Piscataway, NJ 08854

ISO 1940, Balance Quality Requirements of Rigid Rotors

Publisher: International Organization for Standardization (ISO), 1 rue de Varembé, Case Postale 56, CH-1211, Genève 20, Switzerland/Suisse

7 DOCUMENTATION

7.1 Requirements

The following documents shall be supplied for each pump item furnished:

(a) pump and driver outline drawing;

(b) centrifugal pump data sheet;

(c) manufacturers cooling/heating piping drawing (if applicable);

(d) pump fluid circulation plan;

(e) performance curve with rating point;

(f) cross-sectional drawing with parts list;

(g) instruction manual;

(h) motor wiring diagram (CMP);

(i) coupling outline drawing, parts list, and alignment tolerance limits; and

(j) documentation for specified performance test.

7.1.1 Size. Each document shall be of a size that is a multiple of $8\frac{1}{2}$ in. x 11 in.

7.1.2 Information. A description for each document is as follows.

7.1.2.1 Pump and Driver Outline Drawing

(a) The pump and driver outline drawing may contain all information shown on, and may be arranged as, the sample outline drawing included herein and identified as Figs. 1 and 2.

(b) Tapped openings, when supplied, shall be identified with the following markings:

Marking	Purpose
I	Casing Drain
II	Discharge Gage or Flush Connection
III	Suction Gage or Flush Connection
IV	Containment Shell Drain
V	Return Flush Temperature and/or Outlet
VI	Containment Shell Temperature
VII	Frame Connection: Top
VIII	Frame Connection: Drain
IX	Containment Shell Flush Inlet
X	Oil Drain
XI	Frame Cooling

7.1.2.2 Centrifugal Pump Data Sheet

(a) The centrifugal pump data sheet may contain all information shown on and may be arranged as the sample data sheet included herein and identified as Form 1.

(b) This document may be used for inquiry, proposal, and as-built.

7.1.2.3 Circulation Piping Drawing

(a) The circulation piping drawing shall be included if the pump is fitted with a circulation piping system supplied by the pump manufacturer.

(b) The circulation piping drawing may contain all information and uniform nomenclature shown in and may be arranged as the sample drawings included herein and identified as Fig. 3.

Copyright ASME International
Provided by IHS under license with ASME
No reproduction or networking permitted without license from IHS

Not for Resale

Copyright ASME International
Provided by IHS under license with ASME
No reproduction or networking permitted without license from IHS

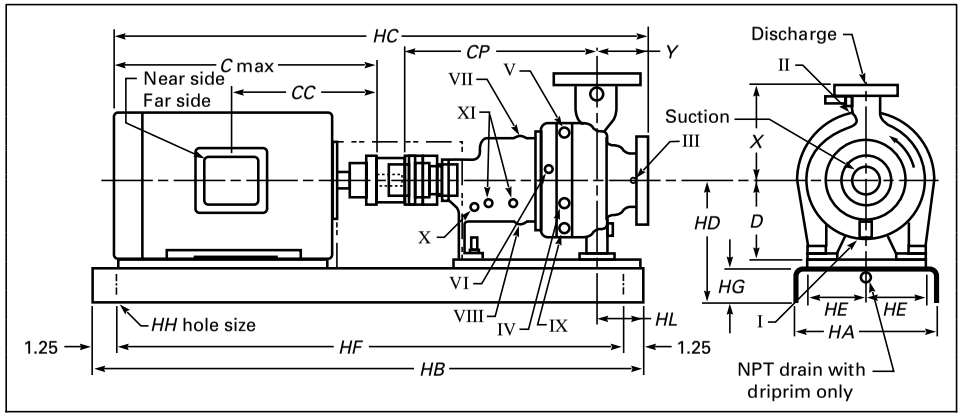

Pump Size _____ **Model** _____ **Frame Size** _____

Flange Holes

Suction	Thru	☐
	Tapped	☐
Discharge	Thru	☐
	Tapped	☐

☐ 125# ANSI flanges
☐ 150# ANSI flanges
☐ 300# ANSI flanges
☐ Flat face flanges
☐ Raised face flanges

Weight (lb)

Pump _____
Driver _____
Baseplate (incl. cplg. & guard) _____

Coupling Specifications

Mfg. _____
Type _____
Coupling Bores: Pump _____ Driver _____

Motor Specifications

Mfr. _____
Frame _____
hp _____ sf _____
rpm _____
Hz _____
Enclosure _____
Voltage _____
Phase _____

HC _____ *CC* _____ *C* _____ *D* _____ *X* _____ *CP* _____ *Y* _____

Baseplate	*HA*	*HB*	*HE*	*HF*	*HG*	*HH*	Motor T & S Frame	*HD* $D = 5^1/_4$	*HD* $D = 8^1/_4$	*HD* $D = 10$	*HD* $D = 14^1/_2$

Type of Baseplate

Steel	☐ without driprim	☐ with driprim
Cast iron	☐ without driprim	☐ with driprim
Nonmetallic	☐ without driprim	☐ with driprim

Adjustable foot supports ☐
Drip pan ☐

Motor	Furnished by	☐ Others	☐ Pump mfg.
	Mounted by	☐ Others	☐ Pump mfg.
Coupling	Furnished by	☐ Others	☐ Pump mfg.
	Mounted by	☐ Others	☐ Pump mfg.
Coupling Guard	Furnished by	☐ Others	☐ Pump mfg.
	Mounted by	☐ Others	☐ Pump mfg.

Lubrication of Bearings

☐ Oil ☐ Oil mist
☐ Grease
☐ Grease-lubed for life
Type of oil lubricator: _____

Casing

☐ Plain
☐ Jacketed
☐ Traced
☐ Other

Tapped Openings

No.	NPT Size	Qty.	Purpose	Marking	Furnished Yes	Furnished No	Usage
I			Casing drain				
II			Discharge gage or flush connection				
III			Suction gage or flush connection				
IV			Containment shell drain				
V			Return flush temperature and/or outlet				
VI			Containment shell temperature				
VII			Frame connection: top				
VIII			Frame connection: drain				
IX			Containment shell flush inlet				
X			Oil drain				
XI			Frame cooling				

Usage Nomenclature

A = piped by manufacturer
B = piped by user
C = plugged by manufacturer
D = Open (WARNING: remove shipping plug.)
E = other

Drawing is not to scale. All dimensions are in inches. Weights are approximate.

Dwg. No. _____

Customer/user _____
Location _____
Cust. P.O. no. _____ Ser. no. _____
Item no. _____ Equip. no. _____
Factory order no. _____
Certified by _____ Date _____
Rev. _____ Date _____

Fig. 1 Pump and Driver Outline Drawing for Magnetic Drive Pumps

Not for Resale

Copyright ASME International
Provided by IHS under license with ASME
No reproduction or networking permitted without license from IHS

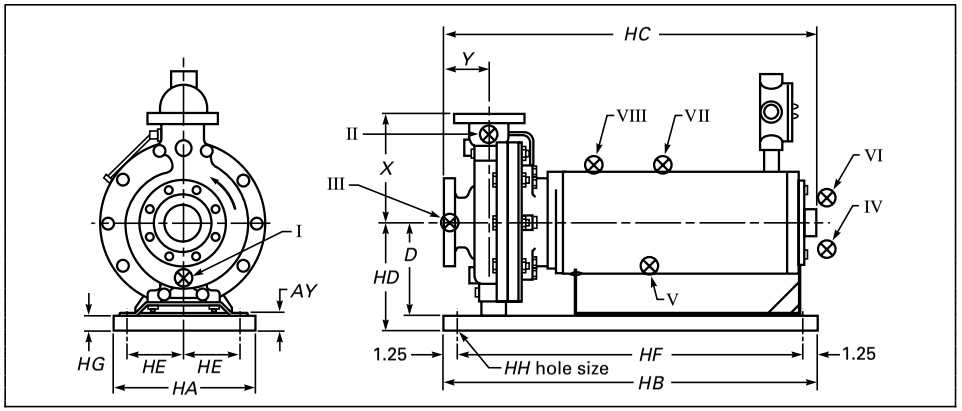

Pump Size _____ **Model** _____

Weight _____

Flange Holes

- ☐ Thru
- ☐ Tapped

- ☐ 125# ANSI flanges
- ☐ 150# ANSI flanges
- ☐ 300# ANSI flanges
- ☐ Flat face flanges
- ☐ Raised face flanges

Motor Specifications

Mfg. _____
Frame _____
hp _____
sf _____
rpm _____
Enclosure _____
Voltage _____
Hz _____
Phase _____

Shaft Type

- ☐ Sleeved
- ☐ Unsleeved

Casing

- ☐ Plain
- ☐ Jacketed
- ☐ Traced
- ☐ Other

HC _____ *D* _____ *X* _____ *Y* _____

Baseplate	*HA*	*HB*	*HE*	*HF*	*HG*	*HH*	Motor Frame	*HD*				*AY*
								D = $5^1/_4$	*D* = $8^1/_4$	*D* = 10	*D* = $14^1/_2$	

Type of Baseplate

Steel	☐ without driprim ☐ with driprim
Cast iron	☐ without driprim ☐ with driprim
Nonmetallic	☐ without driprim ☐ with driprim

Adjustable foot supports ☐
Drip pan ☐

Tapped Openings

No.	NPT Size	Qty.	Purpose	Marking	Furnished Yes	Furnished No	Usage
I			Casing drain				
II			Discharge gage or flush connection				
III			Suction gage or flush connection				
IV			Pump casing drain connection				
V			Stator cavity drain connection				
VI			Vent or probe connection				
VII			Winding temperature connection				
VIII			Vent connection (oil filled stator)				

Usage Nomenclature

A = piped by manufacturer
B = piped by user
C = plugged by manufacturer
D = Open (WARNING: remove shipping plug.)
E = other

Drawing is not to scale. All dimensions are in inches. Weights are approximate.

Dwg. no. _____

Customer/user _____
Location _____
Cust. P.O. no. _____ Ser. no. _____
Item no. _____ Equip. no. _____
Factory order no. _____
Certified by _____ Date _____
Rev. _____ Date _____

Fig. 2 Pump and Driver Outline Drawing for Canned Motor Pumps

Not for Resale

Form 1 Sealless Centrifugal Pump Data Sheet

Applicable To _____ Proposal _____ Purchase _____ As Built _____ Request for Quote No. _____
Pump Type _____ Canned Motor _____ Magnetic Drive _____
Customer _____
Service _____ Number Required _____
Pump Mfg _____ Pump Model _____ Proposal No. _____

OPERATING CONDITIONS

Liquid _____ Capacity; Normal _____ gpm, Rated _____ gpm

Temperature (°F) Normal _____ Discharge Pressure Normal _____ Suction Pressure Normal _____
Min. _____ (psig) Max. _____ (psig) Max. _____
Max. _____ Rated _____ Rated _____
Specific Gravity @ P.T. _____ Differential Pressure (psi) _____ Differential Head (TDH) (ft) _____
@ Min. Temp. _____ Max. System Press. (psig) _____ NPSH Avail. (ft) @ Norm. Cap. _____
@ Max. Temp. _____ MAWP (psig) _____ @ Rated Capacity _____
Viscosity (cps) @ P.T. _____ Specific Heat @ P.T. _____ Vapor Press. (psia) @ P.T. _____
@ Min. Temp. _____ @ Min. Temp. _____ @ Min. Temp. _____
@ Max. Temp. _____ @ Max. Temp. _____ @ Max. Temp. _____
Surrounding Ambient Temperature (°F) Max. _____ Min. _____
Erosion caused by _____
Solids; % _____ (by weight/by volume), Hardness _____, Size _____
Corrosion caused by _____
Cooling Water Available; Yes _____ No _____ Secondary Containment Required; Yes _____ No _____

CONSTRUCTION

Main Connections

	Size	ANSI Rating	Facing	Position
Suction				
Discharge				
Impeller	Closed _____	Open _____	Semi-open _____	

Other Connections

Drain Size _____ Drain No. _____
Vent Size _____ Vent No. _____
Gauge Size _____ Gauge No. _____
Recirculation/Flush Plan _____

MATERIALS

Casing _____ Impeller _____
Containment Shell _____ Casing Gasket _____
Shaft _____ Thrust Washer(s) _____
Shaft Sleeve/Journal _____ Wear Ring _____
Bearing(s) _____ Bearing Housing(s) _____
Magnets _____ Baseplate _____
Magnet Coupling Type: Eddy Current _____ Synchronous _____
Drive Magnet Bearing: Type _____ Lubrication _____

MOTOR DATA

CMP MDP

Manufacturer _____ Frame Size _____
Enclosure _____ Area Classification _____
Rated Speed _____ Rated Horsepower _____
Voltage _____ Phase _____ Hz _____
Insulation Class _____ Temperature Rise _____

Full Load Current at Rated Voltage (amp) _____
Bearings: Type _____ Lube _____

	Full Load	3/4 Load	1/2 Load
Efficiency			
Power Factor			

Coupling: Mfg. _____ Model _____ Type _____

PERFORMANCE

Pump Curve No. _____
Impeller Dia (in.) Rated _____
Max. _____ Min. _____
Max. Head Rated Impeller _____
BHP Rated _____ Max. HP _____
Min. Continuous Flow (gpm) _____
Efficiency at Rated Point
Hydraulic _____ Shaft Input _____

NPSH Required at Rated Point (ft) _____
Max. Sound Pressure (dBA) _____
Outline Drawing No. _____
Cross-Sectional Drawing No. _____
Weights (lb): Pump _____
Motor _____ Baseplate _____

TESTS

Shop Tests	Nonwitnessed	Witnessed
Hydrostatic		
Hermaticity		
Performance		
NPSH		
Vibration		
Other		

PROTECTIVE INSTRUMENTATION

Leak Detection:	Yes _____	No _____	Mfg. & Model _____
Motor Load:	Yes _____	No _____	Mfg. & Model _____
Bearing(s):	Yes _____	No _____	Mfg. & Model _____
Temperature:	Yes _____	No _____	Mfg. & Model _____
Other:	Yes _____	No _____	Mfg. & Model _____

Copyright ASME International
Provided by IHS under license with ASME
No reproduction or networking permitted without license from IHS
Not for Resale

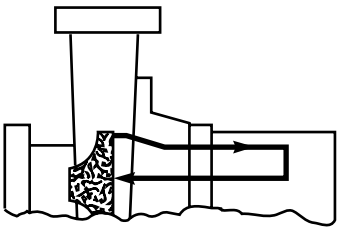

Internal Circulation
(From behind the impeller through the drive section back to suction.)

Plan 7301S

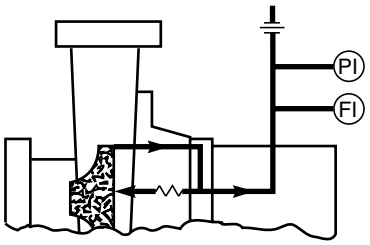

Reverse Circulation
(From behind the impeller through the drive section and return to suction vessel.)

Plan 7313S

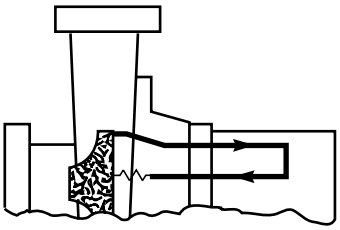

Controlled Internal Circulation
(From behind the impeller through the drive section to an internal restriction to suction or intermediate pressure section.)

Plan 7314S

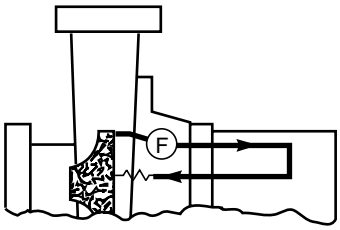

Filtered Internal Circulation
(From behind the impeller through a centrifugal or mechanical filter through the drive section, to an internal restriction, to suction or intermediate pressure section.)

Plan 7315S

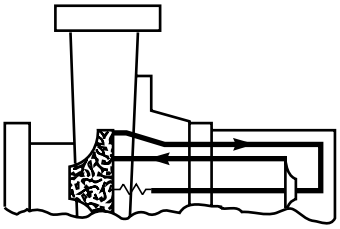

Internal Circulation With Auxiliary Impeller
(From behind the impeller to an auxiliary. impeller to increase pressure before passing through the drive section. Restriction to suction and return to intermediate pressure region.)

Plan 7325S

LEGEND

- (F) Filter
- Internal flow restriction
- Y-type strainer
- Heat exchanger
- (FI) Flow indicator, only when specified
- Flow regulating valve
- Cyclone separator
- (PI) Pressure gage with block valve
- Orifice (removable orifice or an integral pressure breakdown arrangement)

Fig. 3 Pump Fluid Circulation Plans

Copyright ASME International
Provided by IHS under license with ASME
No reproduction or networking permitted without license from IHS

Not for Resale

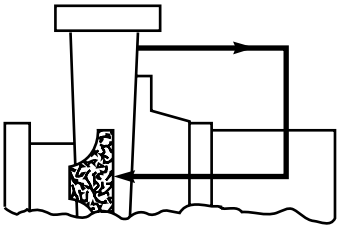

External Circulation
(From discharge through drive section to suction.)

Plan 7311S

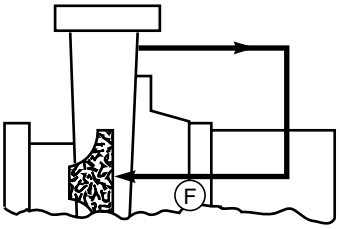

Filtered Circulation
(From discharge through filter through drive section to suction.)

Plan 7312S

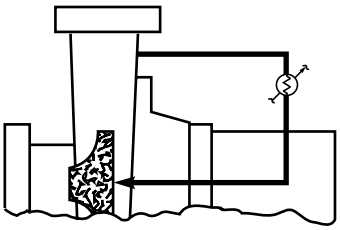

Temperature Controlled Circulation
[From discharge through heat exchanger (heat or cool) through drive section to suction.]

Plan 7321S

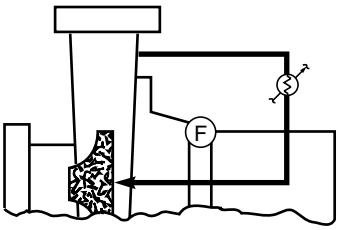

Circulation With Filter and Temperature Control
(From discharge through heat exchanger and filter through drive section to suction.)

Plan 7322S

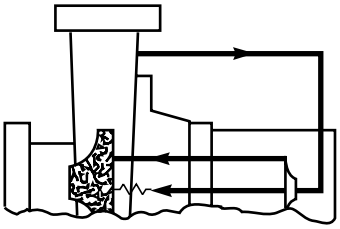

Circulation With Pressure Increase From Auxiliary Impeller
(From discharge to an auxiliary impeller through drive section and flow restriction to suction and intermediate pressure area.)

Plan 7326S

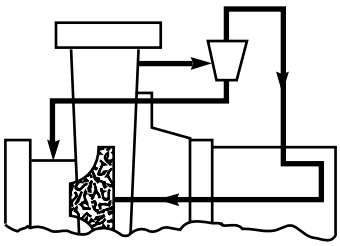

Circulation With Centrifugal Separator
(From discharge through a centrifugal separator through drive section to suction. Waste particles to suction or drain.)

Plan 7331S

Fig. 3 Pump Fluid Circulation Plans (Cont'd)

Copyright ASME International
Provided by IHS under license with ASME
No reproduction or networking permitted without license from IHS

Not for Resale

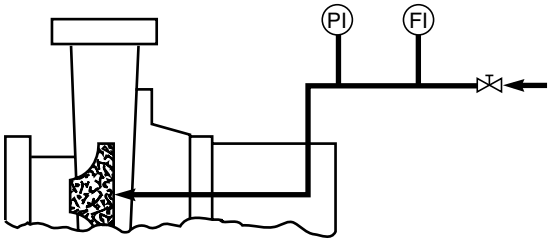

Backflushing of Drive
(Flush with compatible fluid from an external source through drive section to suction or intermediate pressure section.)

Plan 7332S

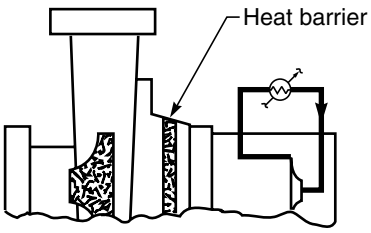

Separate Circulation System
(Circulation through drive section by an auxiliary impeller through a heat exchanger for heat removal.)

Plan 7323S

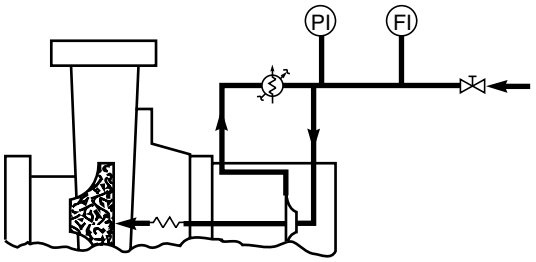

Reduced Flow Backflush Using Separate Circulation System
[To minimize dilution, separate circulation (Plan 7323S) is used with controlled backflush rate and flow restriction seal.]

Plan 7333S

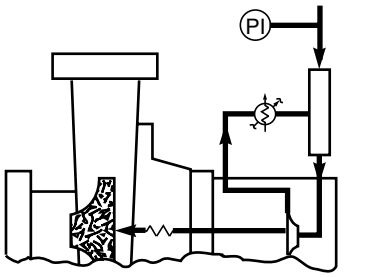

Reduced Flow Backflush Using Separate Circulation System and Fluid Reservoir
(Same as plan 7333S except controlled backflush is from a pressurized reservoir.)

Plan 7353S

Fig. 3 Pump Fluid Circulation Plans (Cont'd)

7.1.2.4 Manufacturer Cooling/Heating Piping Drawing

(a) A cooling/heating piping drawing shall be included if the pump assembly is fitted with a heating/cooling piping system supplied by the pump manufacturer.

(b) The cooling/heating piping drawing may contain all information and uniform nomenclature shown in and may be arranged as the sample drawings included herein and identified as Fig. 4.

7.1.2.5 Performance Curve(s)

(a) Generalized published performance curves may be published at the discretion of the manufacturer. This type of curve may not be practical for specific pump design configurations due to the complexity of the variables which make up the data. When such curves are published, they shall be a composite (family) of curves for the full range of impeller diameters plotting (at constant speed) head, power consumption, efficiency, and NPSH-required versus capacity (see Figs. 5 and 6). If such information is published for magnetic drive pumps, it is to be indicated if the efficiency and power curve values contain the magnetic coupling and bearing frame losses. Such curves are not to be used by the purchaser for design and construction decisions unless the curves are certified. The delivered pumps will achieve the published results at the designated design point within the tolerances specified by the Hydraulic Institute for the site-specified condition.

(b) For specific applications the manufacturer shall provide a certified performance curve indicating the impeller diameter, the head and flow rating point, NPSH-required, and the motor brake horsepower to achieve the design conditions specified by the purchaser. The brake horsepower and the recommended motor size to meet the design conditions specified by the purchaser shall be included. This curve is to provide head, power consumption, pump efficiency, and NPSH-required versus capacity for the flow range of the selected impeller. If the specified fluid viscosity or specific gravity affects the

Copyright ASME International
Provided by IHS under license with ASME
No reproduction or networking permitted without license from IHS

Not for Resale

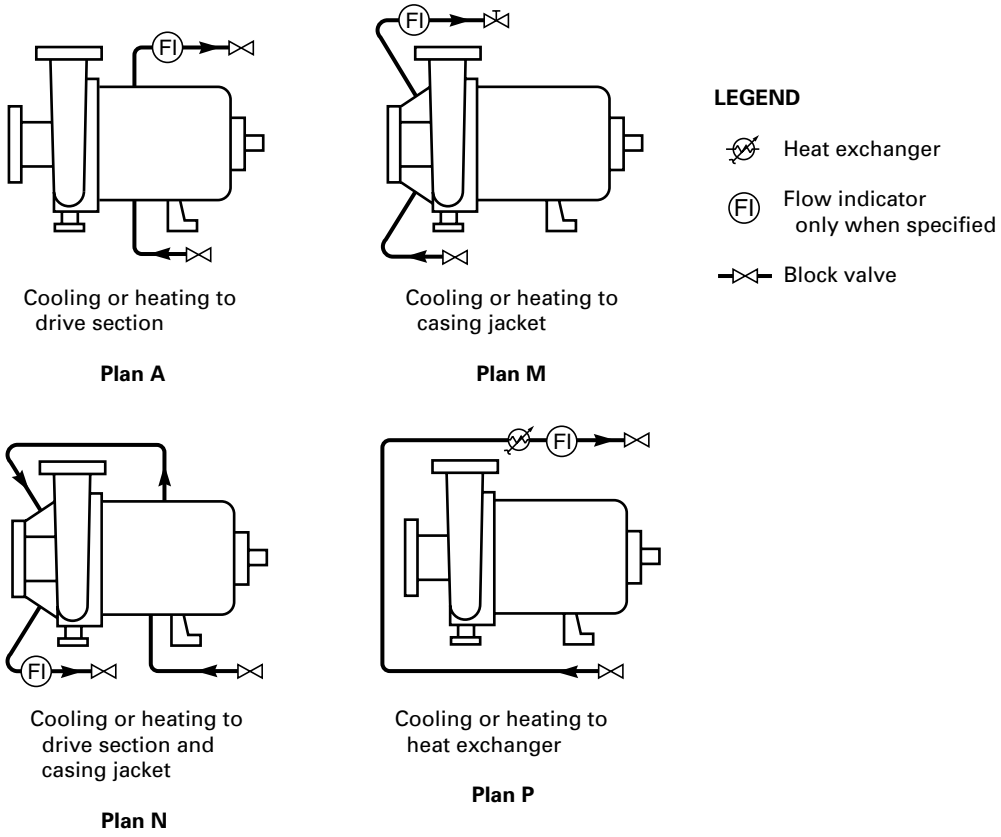

Fig. 4 Cooling and Heating Piping Plans

pump performance, it shall be so noted on the performance curve in accordance with ANSI/HI 1.1 through 1.5.This information may be used by the purchaser to implement design decisions.

(c) Hydraulic tests shall be conducted in accordance with ANSI/HI 1.6.

7.1.2.6 Cross-Sectional Drawing. The cross-sectional drawing shall show all assembled parts of the pump. It shall be complete with a parts list referenced to the drawing.

7.1.2.7 Instruction Manual

(a) The instruction manual should include information on the correct installation, preparation for start-up, starting up, operation, trouble checklist, and maintenance information for the model pump assembly furnished.

(b) Any limitations or warnings on the installation, operation, etc., of the unit should be clearly defined.

(c) The instruction manual shall be an $8\frac{1}{2}$ in. x 11 in. (A4) size booklet or electronic format.

(d) The use of a single manual to describe many similar models of pumps should be minimized to reduce user confusion on the exact model furnished.

(e) Recommended tolerances for critical parts would be beneficial to users.

(f) Instruction manuals for auxiliary equipment shall be supplied by the pump manufacturer if included as part of their supply.

7.2 Specially Requested Documentation

Documentation in addition to that listed under para. 7.1 is sometimes required by users. This additional documentation shall be made available to such users upon specific request at extra cost.

7.2.1 Master Document List

master document list: a composite list of all documents submitted by the manufacturer, including title of document and drawing or other identification numbers (including revision dates).

(a) This list shall be submitted along with the first document in order for the user to be aware of the documents which will follow.

(b) Revisions to this document list should be made as required.

7.2.2 External Forces and Moments on Nozzles. The allowable external forces and moments on pump suction and discharge nozzles shall be in accordance with para. 5.1.2.

Copyright ASME International
Provided by IHS under license with ASME
No reproduction or networking permitted without license from IHS
Not for Resale

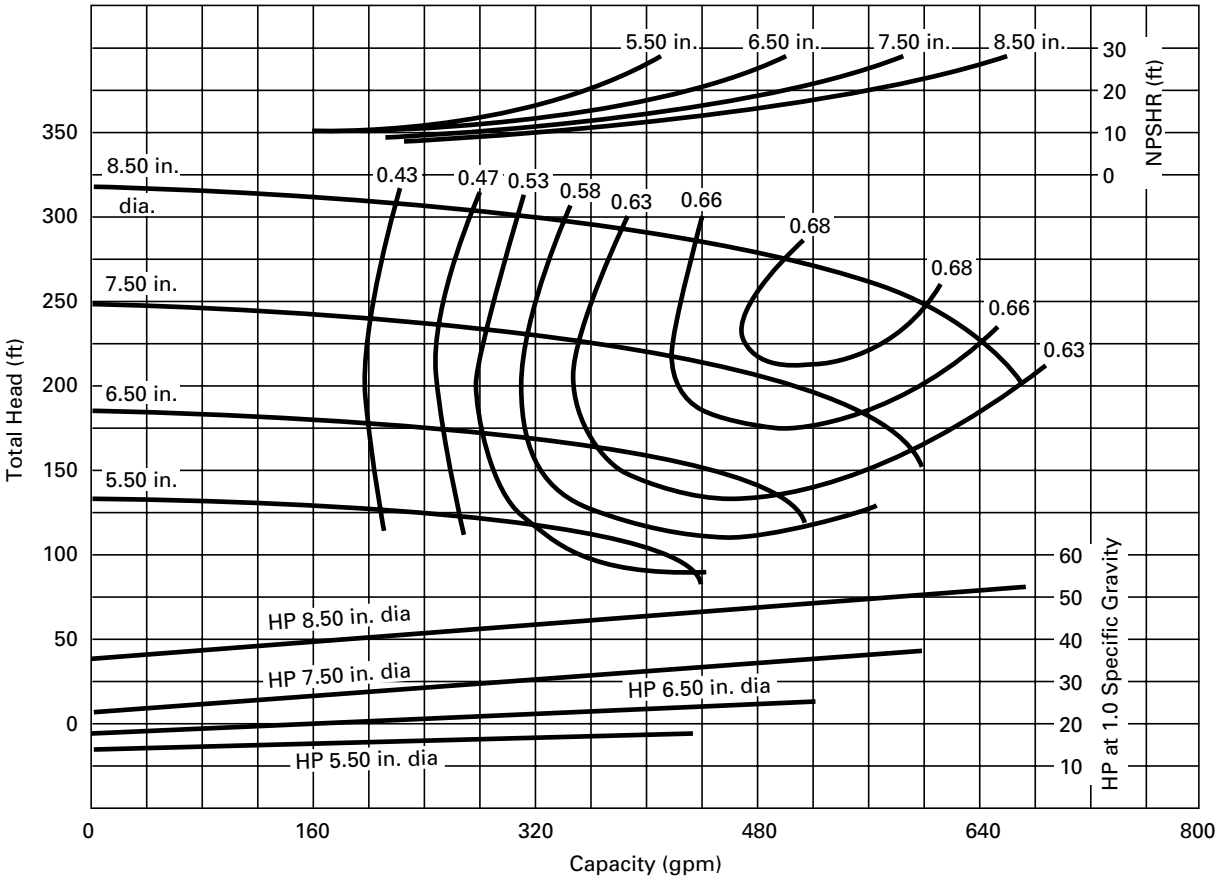

GENERAL NOTES:

(a) This curve is to be used for approximate selection only. Final selection must be made by the pump manufacturer's application engineers.

(b) The publication of a family of generalized curves as illustrated may not be practical for specific pump design configurations and the publication of such curves is at the discretion of the manufacturer. If such information is published, it is to be indicated if the efficiency and power curve values contain the magnetic coupling and bearing frame losses.

Fig. 5 Typical Magnetic Drive Pump Performance Curve

7.2.3 Parts List

(a) A list of all pump parts with manufacturers' identification number(s) shall be supplied by the manufacturer.

(b) A list of recommended spare parts shall be supplied by the manufacturer and shall be subdivided into two categories:

(1) for start-up; and

(2) for one year's operation.

(c) The pump/motor manufacturer should also furnish a spare parts list for equipment supplied with the pump, but not of his manufacture, as recommended by the manufacturer of that particular equipment.

(d) These lists shall be presented to the user before the equipment is shipped in order to permit obtaining the necessary parts prior to equipment start-up.

7.2.4 Special Operating or Design Data. Special operating and design data required by the user shall be supplied. This may include the following:

(a) minimum pump flow rate;

(b) maximum allowable casing pressure and temperature;

(c) maximum allowable jacket pressure and temperature; and

(d) external flush flow rate and pressure for sealless pump drive section.

7.2.5 Special Testing, Painting, and Preparation. Any special testing, painting, and preparation required shall be specified on the centrifugal pump data sheet.

Copyright ASME International
Provided by IHS under license with ASME
No reproduction or networking permitted without license from IHS
Not for Resale

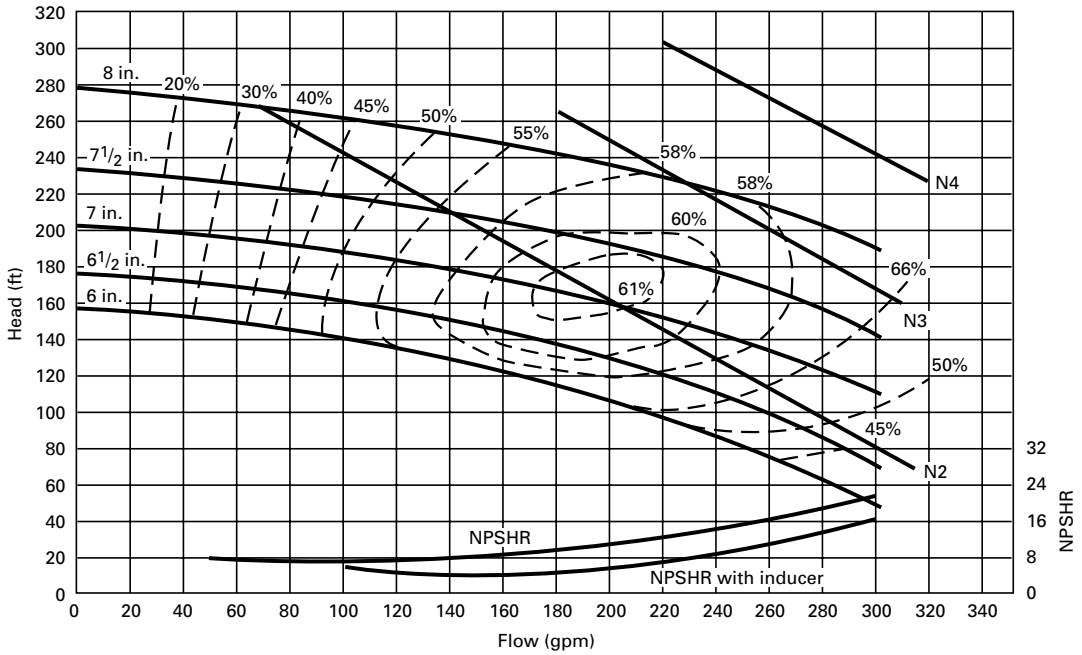

Motor Size	Full Load BHP	Full Load Efficiency
N1	6.8	72.5
N2	13.5	75
N3	23	79
N4	34	82
N5	50.8	79

GENERAL NOTES:

(a) This chart is to be used for approximate selection only. Final selection must be made by the pump manufacturer's application engineers. Viscosity, specific heat, specific gravity, vapor pressure change with temperature, operating temperature, and other factors must be considered in the sizing of canned motor pumps. System conditions such as startup, shutdown, or off-design operation should also be considered in sizing canned motor pumps.

(b) Power and efficiency:

(1) Pump input horsepower is:

$$\text{Pump BHP} = \text{Liquid Horsepower} / \text{Efficiency*}$$

$$\text{Liquid Horsepower} = \text{Capacity} \times \text{Head} \times \text{Specific Gravity} / (3960)$$

*Efficiency is chart efficiency corrected for viscosity (see ANSI/HI 1.1 through 1.5, Figs. 1.52 and 1.53).

(2) Motor should be sized for the maximum capacity delivered by the pump with the specified impeller.

(3) Electrical input to the motor is calculated:

$$\text{Input kW} = \text{Pump Input HP} \times 0.7457 / \text{Motor Efficiency}$$

Motor efficiency at other than full load conditions should be obtained from the manufacturer.

(4) Overall (Wire to Water) efficiency is calculated:

$$\text{Overall Efficiency} = \text{Liquid Horsepower} \times 0.7457 / \text{Input kW}$$

Fig. 6 Typical Canned Motor Pump Performance Curve

Copyright ASME International
Provided by IHS under license with ASME
No reproduction or networking permitted without license from IHS
Not for Resale

ASME Services

ASME is committed to developing and delivering technical information. At ASME's Information Central, we make every effort to answer your questions and expedite your orders. Our representatives are ready to assist you in the following areas:

ASME Press
Codes & Standards
Credit Card Orders
IMechE Publications
Meetings & Conferences
Member Dues Status
Member Services & Benefits
Other ASME Programs
Payment Inquiries
Professional Development
Short Courses
Publications
Public Information
Self-Study Courses
Shipping Information
Subscriptions/Journals/Magazines
Symposia Volumes
Technical Papers

How can you reach us? It's easier than ever!

There are four options for making inquiries* or placing orders. Simply mail, phone, fax, or E-mail us and an Information Central representative will handle your request.

Mail
ASME
22 Law Drive, Box 2900
Fairfield, New Jersey
07007-2900

Call Toll Free
US & Canada: 800-THE-ASME
(800-843-2763)
Mexico: 95-800-THE-ASME
(95-800-843-2763)
Universal: 973-882-1167

Fax—24 hours
973-882-1717
973-882-5155

E-Mail—24 hours
Infocentral@asme.org

* Information Central staff are not permitted to answer inquiries about the technical content of this code or standard. Information as to whether or not technical inquiries are issued to this code or standard is shown on the copyright page. All technical inquiries must be submitted in writing to the staff secretary. Additional procedures for inquiries may be listed within.

Copyright ASME International
Provided by IHS under license with ASME
No reproduction or networking permitted without license from IHS
Not for Resale

ASME B73.3-2003

ISBN 0-7918-2853-0





J14503

Copyright ASME International
Provided by IHS under license with ASME
No reproduction or networking permitted without license from IHS

Not for Resale