ASME B73.1-2001
[Revision of ASME B73.1M-1991(R1999)]

SPECIFICATION FOR HORIZONTAL END SUCTION CENTRIFUGAL PUMPS FOR CHEMICAL PROCESS

AN AMERICAN NATIONAL STANDARD

The American Society of Mechanical Engineers

Copyright ASME International
Provided by IHS under license with ASME
No reproduction or networking permitted without license from IHS

Not for Resale



The American Society of Mechanical Engineers

AN AMERICAN NATIONAL STANDARD

SPECIFICATION FOR HORIZONTAL END SUCTION CENTRIFUGAL PUMPS FOR CHEMICAL PROCESS

ASME B73.1-2001

[Revision of ASME B73.1M-1991(R1999)]

Copyright ASME International
Provided by IHS under license with ASME
No reproduction or networking permitted without license from IHS

Not for Resale

Date of Issuance: February 25, 2002

The next edition of this Standard is scheduled for publication in 2006. There will be no addenda or written interpretations of the requirements of this Standard issued to this edition.

ASME is the registered trademark of The American Society of Mechanical Engineers.

This code or standard was developed under procedures accredited as meeting the criteria for American National Standards. The Standards Committee that approved the code or standard was balanced to assure that individuals from competent and concerned interests have had an opportunity to participate. The proposed code or standard was made available for public review and comment that provides an opportunity for additional public input from industry, academia, regulatory agencies, and the public-at-large.

ASME does not "approve," "rate," or "endorse" any item, construction, proprietary device, or activity.

ASME does not take any position with respect to the validity of any patent rights asserted in connection with any items mentioned in this document, and does not undertake to insure anyone utilizing a standard against liability for infringement of any applicable letters patent, nor assume any such liability. Users of a code or standard are expressly advised that determination of the validity of any such patent rights, and the risk of infringement of such rights, is entirely their own responsibility.

Participation by federal agency representative(s) or person(s) affiliated with industry is not to be interpreted as government or industry endorsement of this code or standard.

ASME accepts responsibility for only those interpretations of this document issued in accordance with the established ASME procedures and policies, which precludes the issuance of interpretations by individuals.

No part of this document may be reproduced in any form,
in an electronic retrieval system or otherwise,
without the prior written permission of the publisher.

The American Society of Mechanical Engineers
Three Park Avenue, New York, NY 10016-5990

Copyright © 2002 by
THE AMERICAN SOCIETY OF MECHANICAL ENGINEERS
All Rights Reserved
Printed in U.S.A.

--`,,`,,`-`-`,,`,,`,`,,`---

Copyright ASME International
Provided by IHS under license with ASME
No reproduction or networking permitted without license from IHS

Not for Resale

FOREWORD

In 1955, the Standards Committee on Centrifugal Pumps for Chemical Industry Use, B73, undertook the development of centrifugal pump standards to meet the needs of the chemical industry. Although the Standards Committee had not completed its assignment, the work of one of its task forces resulted in the development of a de facto standard which was published by the Manufacturing Chemists Association in 1962 as an American Voluntary Standard. More than a dozen manufacturers of chemical process pumps have been marketing pumps conforming with the AVS since that time.

In 1965 the Hydraulic Institute published a tentative standard similar in content to the AVS, but updated certain portions. Although the Hydraulic Institute Tentative Standard reflected more nearly the current practice of manufacturers and users, it was believed necessary to publish a new document which would supersede both the original AVS and the tentative standard, and which could incorporate the technical content of both documents, in addition to dimensional criteria and features generally accepted by manufacturers and users. The January 1968 revision of the AVS was therefore approved as an American National Standard under the existing standards method and published as ANSI B123.1-1971.

ANSI B73.1 superseded ANSI B123.1-1971 and was first published in 1974. The 1974 edition brought to 15 the number of pump sizes covered by the standard. Since then, the committee has continued to be active and has added five more sizes for a total of 20, and made a number of revisions in the text of the standard.

Shortly thereafter, the American National Standards Committee B73 undertook to revise the standard, and as a result, new information on baseplate rigidity, bearing frame adapter, and bearing housing drain was introduced. The 1984 edition included, for the first time, information that covered documentation of pump and driver outline drawing of the centrifugal pump, data sheet, mechanical seal drawing, stuffing box piping plans, and cooling/heating piping plans.

The 1991 revision included larger and self-venting tapered seal chambers, as well as conventional stuffing boxes, revised baseplate dimensions, with a new identification numbering system, and a ductile material requirement for the bearing frame adapter if it clamps the rear cover plate to the casing.

With the expanding utilization of the ASME B73.1 pumps in the chemical process industry and its growing acceptance in the hydrocarbons processing industry, the B73 committee has continued to improve the B73.1 standard. This revision of the Standard incorporates 7 new sizes of pumps, bringing the total number to 27. Many of the new additions were at the request of the user population. Although inclusion of “ISO” standard size pumps was entertained, the proposed additions of the “ISO” sizes were rejected by the committee. It was thought that the addition of the “ISO” sizes made the standard overly complex and weakened its mechanical fortitude. The material of construction section of the standard was expanded to include readily available corrosion resistant alloys. Recent publications by the Hydraulic Institute in areas such as baseplate tolerance, acceptable nozzle loads, preferred operating region and NPSH margin have been incorporated into this revision. The former Appendix covering documentation has been established as an integral portion of the Standard. This is in part in response to the needs of the user community for compliance to U.S. Government regulations covering chemical process equipment and pumps specifically OSHA

--`,,`,,`,`,,`---

Copyright ASME International
Provided by IHS under license with ASME
No reproduction or networking permitted without license from IHS
Not for Resale

Process Safety Management, 29 CFR 1910.119. In total, these revisions to the standard are intended to better serve process industries and expand the use of ASME B73 pumps world wide.

Suggestions for improvement in this Standard will be welcome and should be sent to the American Society of Mechanical Engineers, Attn: Secretary B73 Committee, Three Park Ave., New York, NY 10016-5990.

This revision was approved as an American National Standard on September 7, 2001.

Copyright ASME International
Provided by IHS under license with ASME
No reproduction or networking permitted without license from IHS
Not for Resale

ASME STANDARDS COMMITTEE B73
Chemical Standard Pumps

(The following is the roster of the Committee at the time of approval of this Standard.)

OFFICERS

R. J. Hart, *Chair*
G. W. Sabol, *Vice Chair*
C. J. Gomez, *Secretary*

COMMITTEE PERSONNEL

B. M. Burkelman, Ingersoll-Dresser Pumps
F. W. Buse, *Alternate,* Ingersoll-Dresser Pumps
G. C. Clasby, Flowserve Corp., Pump Division
J. F. Dolniak, Eli Lilly & Co.
R. W. Estep, Union Carbide Corp.
C. J. Gomez, The American Society of Mechanical Engineers
R. J. Hart, E.I. DuPont de Nemours & Co.
M. T. Henessey, Flowserve Corp.
W. G. Klingberg, Sterling Fluid Systems
E. W. Allis, *Alternate,* Sterling Fluid Systems
T. Matthews, Dow Chemical Co.
R. A. Lewis, *Alternate,* Dow Chemical Co.
R. H. Monroe, Jr., Solutia Inc.
J. C. Osborne, AR Wilfley & Sons Inc.
J. D. Quill, ITT Industries — Goulds
A. E. Stavale, *Alternate,* ITT Industries — Goulds
J. L. Ryan, Met-Pro Corp., Dean Pump Division
G. W. Sabol, Union Carbide Corp.
M. D. Smith, Syndyne Corp.
D. M. Threlkel, NEMA

Copyright ASME International
Provided by IHS under license with ASME
No reproduction or networking permitted without license from IHS
Not for Resale

CONTENTS

Foreword iii
Committee Roster v

1 Scope 1

2 Alternative Design 1

3 Nomenclature and Definitions 1
3.1 Source 1

4 Design and Construction Features 1
4.1 Pressure and Temperature Limits 1
4.2 Flanges 1
4.3 Casing 1
4.4 Impeller 5
4.5 Shaft 5
4.6 Shaft Sealing 5
4.7 Bearings 13
4.8 Materials of Construction 13
4.9 Corrosion Allowance 13
4.10 Direction of Rotation 13
4.11 Dimensions 14
4.12 Miscellaneous Design Features 14

5 General Information 14
5.1 Application 14
5.2 Test 16
5.3 Nameplates 16

6 References 17

7 Documentation 18
7.1 General 18
7.2 Requirements 18
7.3 Information 18
7.4 Specially Requested Documentation 21

Figures
1 Shaft Sleeve Runout 5
2 Mechanical Seal Piping Plans 6
3 Cooling and Heating Piping Plans 9
4 Typical Seal Arrangements 10
5 Cylindrical Seal Chamber 11

Copyright ASME International
Provided by IHS under license with ASME
No reproduction or networking permitted without license from IHS
Not for Resale

6 Self-Venting Tapered Seal Chamber 11
7 Stuffing Box 12
8 Seal Chamber Face Runout 12
9 Seal Chamber Register Concentricity 12
10 Sample Outline Drawing 19

Tables

1 Pump Dimensions 2
2 Baseplate Dimensions 4
3 Approximate Performance of Standard Pumps (50 Hz) 15
4 Approximate Performance of Standard Pumps (60 Hz) 16
5 Minimum Continuous Flow 17
6 B73 Standardized Electronic Data Exchange File Specification 22

Nonmandatory Appendix

A ASME Centrifugal Pump Data Sheet 31

Copyright ASME International
Provided by IHS under license with ASME
No reproduction or networking permitted without license from IHS
Not for Resale

Copyright ASME International
Provided by IHS under license with ASME
No reproduction or networking permitted without license from IHS
Not for Resale

SPECIFICATION FOR HORIZONTAL END SUCTION CENTRIFUGAL PUMPS FOR CHEMICAL PROCESS

1 SCOPE

This Standard covers centrifugal pumps of horizontal, end suction single stage, centerline discharge design. This Standard includes dimensional interchangeability requirements and certain design features to facilitate installation and maintenance. It is the intent of this Standard that pumps of the same standard dimension designation from all sources of supply shall be interchangeable with respect to mounting dimensions, size and location of suction and discharge nozzles, input shafts, baseplates, and foundation bolt holes (see Tables 1 and 2).

2 ALTERNATIVE DESIGN

Alternate designs will be considered, provided they meet the intent of this Standard and cover construction and performance which are equivalent to and otherwise in accordance with these specifications. All deviations from these specifications shall be described in detail.

3 NOMENCLATURE AND DEFINITIONS

3.1 Source

All nomenclature and definitions of pump components shall be in accordance with HI 1.1–1.2.

4 DESIGN AND CONSTRUCTION FEATURES

4.1 Pressure and Temperature Limits

4.1.1 Pressure Limits. Pressure limitations shall be stated by the pump manufacturer.

4.1.1.1 The design pressure of the casing, including stuffing box or seal chamber and gland, shall be at least as great as the pressure-temperature rating of ASME B16.5 or ASME B16.42 Class 150 flanges for the material used.

4.1.1.2 The design pressure of jackets shall be at least 100 psig (690 kPa gage) at 340°F (170°C). Heating jackets may be required for jacket temperatures to 500°F (260°C) with a reduction in pressure corresponding to the reduction in yield strength of the jacket material.

4.1.1.3 Casing, stuffing box, cover or seal chamber, and jackets shall be designed to withstand a hydrostatic test at 1.5 times the maximum design pressure for the particular component and material of construction used (see para. 5.2.1).

4.1.2 Temperature Limits. Temperature limitations shall be stated by the pump manufacturer. Pumps should be available for temperatures up to 500°F (260°C). Jacketing and other modifications may be required to meet the operating temperature.

4.2 Flanges

Suction and discharge nozzles shall be flanged. Flanges shall conform to ASME B16.5 or ASME B16.42 Class 150 standards except that marking requirements are not applicable and the maximum acceptable tolerance on parallelism of the back of the flange shall be 3 deg and bolt holes may be tapped where noted in Table 1. Through bolt holes are preferred. When tapped holes are supplied, they shall be noted on the outline drawing. As an option, Class 300 flanges in accordance with ASME B16.5 or ASME B16.42 may be offered subject to the manufacturer's casing pressure-temperature limitations. All pumps regardless of flange rating shall conform to the *X* and *Y* dimensions shown in Table 1.

4.3 Casing

4.3.1 Drain Connection Boss(es). Pump casing shall have boss(es) to provide for drain connection(s) in the lowest part of the casing. Boss size shall accommodate $\frac{1}{2}$ in. NPT min. Boss(es) shall be drilled and tapped when specified by customer.

4.3.2 Auxiliary Connection Boss(es). The suction and discharge nozzles shall have boss(es) for gage connections. Boss size shall accommodate $\frac{1}{4}$ in. NPT min., $\frac{1}{2}$ in. NPT preferred. Boss(es) shall be drilled and tapped when specified by customer.

Copyright ASME International
Provided by IHS under license with ASME
No reproduction or networking permitted without license from IHS
Not for Resale

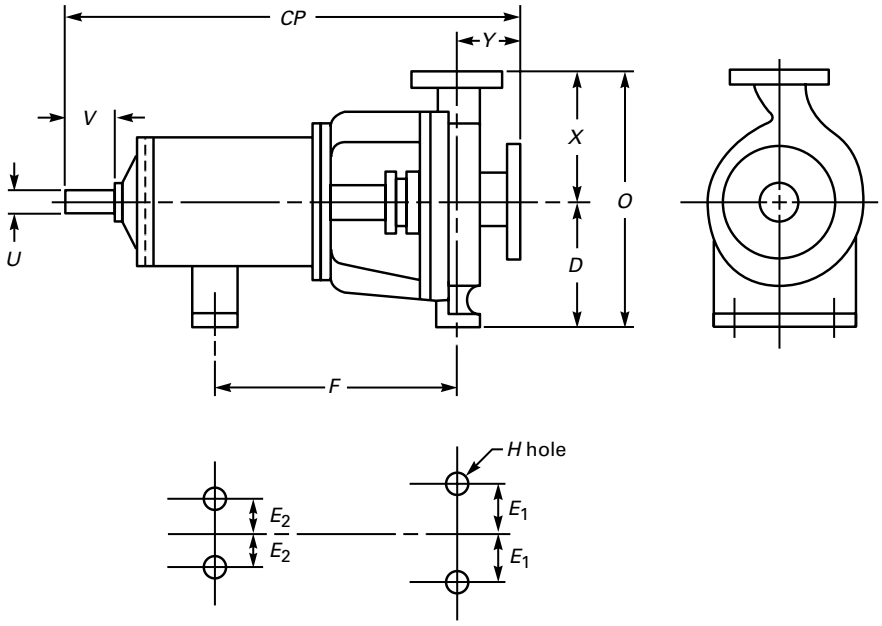

TABLE 1 PUMP DIMENSIONS

Dimension Designation	Size; Suction × Discharge × Nominal Impeller Diameter	*CP*	*D*	$2E_1$	$2E_2$	*F*
AA	1.5×1×6 (40×25×150)	17.5 (445)	5.25 (133)	6 (152)	0	7.25 (184)
AB	3×1.5×6 (80×40×150)	17.5 (445)	5.25 (133)	6 (152)	0	7.25 (184)
AC [Note (2)]	3×2×6 (80×50×150)	17.5 (445)	5.25 (133)	6 (152)	0	7.25 (184)
AA [Note (2)]	1.5×1×8 (40×25×200)	17.5 (445)	5.25 (133)	6 (152)	0	7.25 (184)
AB [Note (2)]	3×1.5×8 (80×40×200)	17.5 (445)	5.25 (133)	6 (152)	0	7.25 (184)
*A*10	3×2×6 (80×50×150)	23.5 (597)	8.25 (210)	9.75 (248)	7.25 (184)	12.5 (318)
*A*50	3×1.5×8 (80×40×200)	23.5 (597)	8.25 (210)	9.75 (248)	7.25 (184)	12.5 (318)
*A*60	3×2×8 (80×50×200)	23.5 (597)	8.25 (210)	9.75 (248)	7.25 (184)	12.5 (318)
*A*70	4×3×8 (100×80×200)	23.5 (597)	8.25 (210)	9.75 (248)	7.25 (184)	12.5 (318)
*A*05 [Note (2)]	2×1×10 (50×25×250)	23.5 (597)	8.25 (210)	9.75 (248)	7.25 (184)	12.5 (318)
*A*50	3×1.5×10 (80×40×250)	23.5 (597)	8.25 (210)	9.75 (248)	7.25 (184)	12.5 (318)
*A*60	3×2×10 (80×50×250)	23.5 (597)	8.25 (210)	9.75 (248)	7.25 (184)	12.5 (318)
*A*70	4×3×10 (100×80×250)	23.5 (597)	8.25 (210)	9.75 (248)	7.25 (184)	12.5 (318)
*A*40	4×3×10 (100×80×250)	23.5 (597)	10 (254)	9.75 (248)	7.25 (184)	12.5 (318)
*A*80 [Note (3)]	6×4×10 (150×100×250)	23.5 (597)	10 (254)	9.75 (248)	7.25 (184)	12.5 (318)
*A*20 [Note (2)]	3×1.5×13 (80×40×330)	23.5 (597)	10 (254)	9.75 (248)	7.25 (184)	12.5 (318)
*A*30	3×2×13 (80×50×330)	23.5 (597)	10 (254)	9.75 (248)	7.25 (184)	12.5 (318)
*A*40	4×3×13 (100×80×330)	23.5 (597)	10 (254)	9.75 (248)	7.25 (184)	12.5 (318)
*A*80 [Note (3)]	6×4×13 (150×100×330)	23.5 (597)	10 (254)	9.75 (248)	7.25 (184)	12.5 (318)
*A*90 [Note (3)]	8×6×13 (200×150×330)	33.875 (860)	14.5 (368)	16 (406)	9 (229)	18.75 (476)
*A*100 [Note (3)]	10×8×13 (250×200×330)	33.875 (860)	14.5 (368)	16 (406)	9 (229)	18.75 (476)
*A*105 [Note (3)]	6×4×15 (150×100×380)	33.875 (860)	14.5 (368)	16 (406)	9 (229)	18.75 (476)
*A*110 [Note (3)]	8×6×15 (200×150×380)	33.875 (860)	14.5 (368)	16 (406)	9 (229)	18.75 (476)
*A*120 [Note (3)]	10×8×15 (250×200×380)	33.875 (860)	14.5 (368)	16 (406)	9 (229)	18.75 (476)
*A*105 [Note (3)]	6×4×17 (150×100×430)	33.875 (860)	14.5 (368)	16 (406)	9 (229)	18.75 (476)
*A*110 [Note (3)]	8×6×17 (200×150×430)	33.875 (860)	14.5 (368)	16 (406)	9 (229)	18.75 (476)
*A*120 [Note (3)]	10×8×17 (250×200×430)	33.875 (860)	14.5 (368)	16 (406)	9 (229)	18.75 (476)

(continued)

--`,`-`-`,,`,,`,`,`,,`---

Copyright ASME International
Provided by IHS under license with ASME
No reproduction or networking permitted without license from IHS

Not for Resale

TABLE 1 PUMP DIMENSIONS (CONT'D)

Dimension Designation	*H*	*O*	*U* [Note (1)] Diameter	*U* [Note (1)] Keyway	*V* Min.	*X*	*Y*
AA	0.625 (16)	11.75 (298)	0.875 (22.23)	0.188×0.094 (4.76×2.38)	2 (51)	6.5 (165)	4 (102)
AB	0.625 (16)	11.75 (298)	0.875 (22.23)	0.188×0.094 (4.76×2.38)	2 (51)	6.5 (165)	4 (102)
AC [Note (2)]	0.625 (16)	11.75 (298)	0.875 (22.23)	0.188×0.094 (4.76×2.38)	2 (51)	6.5 (165)	4 (102)
AA [Note (2)]	0.625 (16)	11.75 (298)	0.875 (22.23)	0.188×0.094 (4.76×2.38)	2 (51)	6.5 (165)	4 (102)
AB [Note (2)]	0.625 (16)	11.75 (298)	0.875 (22.23)	0.188×0.094 (4.76×2.38)	2 (51)	6.5 (165)	4 (102)
*A*10	0.625 (16)	16.5 (420)	1.125 (28.58)	0.25×0.125 (6.35×3.18)	2.625 (67)	8.25 (210)	4 (102)
*A*50	0.625 (16)	16.75 (425)	1.125 (28.58)	0.25×.0125 (6.35×3.18)	2.625 (67)	8.5 (216)	4 (102)
*A*60	0.625 (16)	17.75 (450)	1.125 (28.58)	0.25×0.125 (6.35×3.18)	2.625 (67)	9.5 (242)	4 (102)
*A*70	0.625 (16)	19.25 (490)	1.125 (28.58)	0.25×0.125 (6.35×3.18)	2.625 (67)	11 (280)	4 (102)
*A*05 [Note (2)]	0.625 (16)	16.75 (425)	1.125 (28.58)	0.25×0.125 (6.35×3.18)	2.625 (67)	8.5 (216)	4 (102)
*A*50	0.625 (16)	16.75 (425)	1.125 (28.58)	0.25×0.125 (6.35×3.18)	2.625 (67)	8.5 (216)	4 (102)
*A*60	0.625 (16)	17.75 (450)	1.125 (28.58)	0.25×0.125 (6.35×3.18)	2.625 (67)	9.5 (242)	4 (102)
*A*70	0.625 (16)	19.25 (490)	1.125 (28.58)	0.25×0.125 (6.35×3.18)	2.625 (67)	11 (280)	4 (102)
*A*40	0.625 (16)	22.5 (572)	1.125 (28.58)	0.25×0.125 (6.35×3.18)	2.625 (67)	12.5 (318)	4 (102)
*A*80 [Note (3)]	0.625 (16)	23.5 (597)	1.125 (28.58)	0.25×0.125 (6.35×3.18)	2.625 (67)	13.5 (343)	4 (102)
*A*20 [Note (2)]	0.625 (16)	20.5 (520)	1.125 (28.58)	0.25×0.125 (6.35×3.18)	2.625 (67)	10.5 (266)	4 (102)
*A*30	0.625 (16)	21.5 (546)	1.125 (28.58)	0.25×0.125 (6.35×3.18)	2.625 (67)	11.5 (292)	4 (102)
*A*40	0.625 (16)	22.5 (572)	1.125 (28.58)	0.25×0.125 (6.35×3.18)	2.625 (67)	12.5 (318)	4 (102)
*A*80 [Note (3)]	0.625 (16)	23.5 (597)	1.125 (28.58)	0.25×0.125 (6.35×3.18)	2.625 (67)	13.5 (343)	4 (102)
*A*90 [Note (3)]	0.875 (22)	30.5 (775)	2.375 (60.33)	0.625×0.313 (15.88×7.94)	4 (102)	16 (406)	6 (152)
*A*100 [Note (3)]	0.875 (22)	32.5 (826)	2.375 (60.33)	0.625×0.313 (15.88×7.94)	4 (102)	18 (457)	6 (152)
*A*105 [Note (3)]	0.875 (22)	30.5 (775)	2.375 (60.33)	0.625×0.313 (15.88×7.94)	4 (102)	16 (406)	6 (152)
*A*110 [Note (3)]	0.875 (22)	32.5 (826)	2.375 (60.33)	0.625×0.313 (15.88×7.94)	4 (102)	18 (457)	6 (152)
*A*120 [Note (3)]	0.875 (22)	33.5 (851)	2.375 (60.33)	0.625×0.313 (15.88×7.94)	4 (102)	19 (483)	6 (152)
*A*105 [Note (3)]	0.875 (22)	30.5 (775)	2.375 (60.33)	0.625×0.313 (15.88×7.94)	4 (102)	16 (406)	6 (152)
*A*110 [Note (3)]	0.875 (22)	32.5 (826)	2.375 (60.33)	0.625×0.313 (15.88×7.94)	4 (102)	18 (457)	6 (152)
*A*120 [Note (3)]	0.875 (22)	33.5 (851)	2.375 (60.33)	0.625×0.313 (15.88×7.94)	4 (102)	19 (483)	6 (152)

GENERAL NOTES:
(a) Dimensions in parentheses are approximate equivalents in millimeters.
(b) All other dimensions are in inches.

NOTES:
(1) "*U*" Diameter may be 1.625 in. (41.28 mm) in *A*05 through *A*80 sizes to accomodate high torque values.
(2) Discharge flange may have tapped bolt holes.
(3) Suction flange may have tapped bolt holes.

4.3.3 Support. The casing shall be supported by feet beneath the casing or a suitable support between the casing and baseplate.

4.3.4 Disassembly. The design shall permit back removal of the rotating element from the casing without disturbing the suction and discharge connections or the driver. Tapped holes for jackscrews, or equivalent means, shall be provided to facilitate disassembly of the casing and stuffing box cover or seal chamber and to avoid the necessity of drive wedges or prying implements.

4.3.5 Jackets

4.3.5.1 Jackets for heating or cooling the casing, stuffing box, or seal chamber are optional. Connection shall be $\frac{3}{8}$ in. NPT min., with $\frac{1}{2}$ in. NPT preferred. When a jacket is to be used for heating by steam, the inlet connection shall be located at the top quadrant of the casing, stuffing box, or seal chamber; and the drain connection shall be located at the bottom portion of the casing, stuffing box, or seal chamber to prevent the formation of water pockets. Jackets for water cooling shall have a drain for freeze protection.

4.3.5.2 There are several available methods of cooling or heating specific areas of most ASME pumps. The following are examples of acceptable methods and should be available as optional features.

(a) Stuffing Box Jacket

(b) Seal Chamber Jacket

Copyright ASME International
Provided by IHS under license with ASME
No reproduction or networking permitted without license from IHS Not for Resale

Copyright ASME International
Provided by IHS under license with ASME
No reproduction or networking permitted without license from IHS

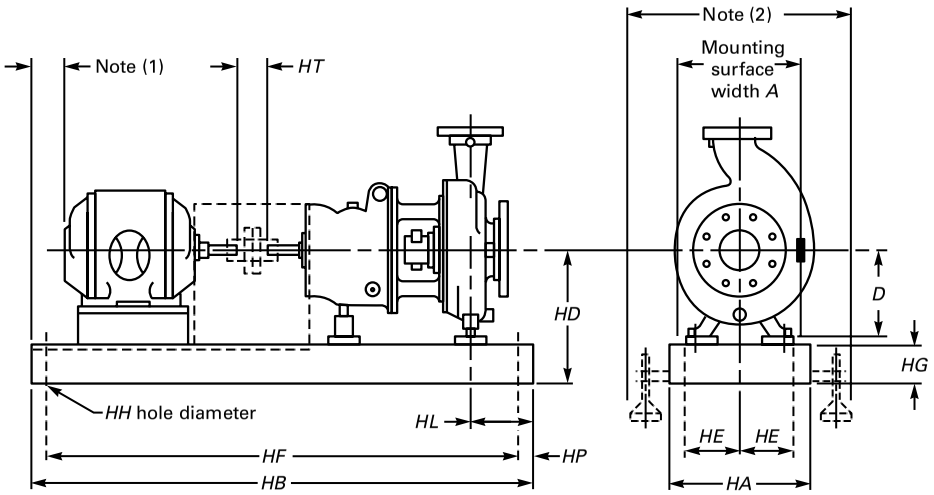

TABLE 2 BASEPLATE DIMENSIONS

Max. NEMA Frame	Baseplate No. [Note (3)]	*A* Min.	*HA* Max. [Note (2)]	*HB*	*HT* Min.	*HD* Max. [Note (4)] *D*=5.25 (133)	*D*=8.25 (210)	*D*=10 (254)	*D*=14.5 (1368)	*HE*	*HF*	*HG* Max.	*HH*	*HL*	*HP*
184*T*	139	12 (305)	15 (381)	39 (991)	3.5 (89)	9 (229)	. . .	. . .	. . .	4.5 (114)	36.5 (927)	3.75 (95)	0.75 (19)	4.5 (114)	1.25 (32)
256*T*	148	15 (381)	18 (457)	48 (1219)	3.5 (89)	10.5 (267)	. . .	. . .	. . .	6 (152)	45.5 (1156)	4.13 (105)	0.75 (19)	4.5 (114)	1.25 (32)
326*TS*	153	18 (457)	21 (533)	53 (1346)	3.5 (89)	12.88 (327)	. . .	. . .	. . .	7.5 (191)	50.5 (1283)	4.75 (121)	0.75 (19)	4.5 (114)	1.25 (32)
184*T*	245	12 (305)	15 (381)	45 (1143)	3.5 (89)	. . .	12 (305)	13.75 (349)	. . .	4.5 (114)	42.5 (1080)	3.75 (95)	0.75 (19)	4.5 (114)	1.25 (32)
215*T*	252	15 (381)	18 (457)	52 (1321)	3.5 (89)	. . .	12.38 (314)	14.13 (359)	. . .	6 (152)	49.5 (1257)	4.13 (105)	0.75 (19)	4.5 (114)	1.25 (32)
286*T*	258	18 (457)	21 (533)	58 (1473)	3.5 (89)	. . .	13 (330)	14.75 (375)	. . .	7.5 (191)	55.5 (1410)	4.75 (121)	1 (25)	4.5 (114)	1.25 (32)
365*T*	264	18 (457)	21 (533)	64 (1626)	3.5 (89)	. . .	13.88 (353)	14.75 (375)	. . .	7.5 (191)	61.5 (1562)	4.75 (121)	1 (25)	4.5 (114)	1.25 (32)
405*TS*	268	22 (559)	26 (660)	68 (1727)	3.5 (89)	. . .	14.88 (378)	14.88 (378)	. . .	9.5 (241)	65.5 (1664)	4.75 (121)	1 (25)	4.5 (114)	1.25(32)
449*TS*	280	22 (559)	26 (660)	80 (2032)	3.5 (89)	. . .	15.88 (403)	15.88 (403)	. . .	9.5 (241)	77.5 (1969)	4.75 (121)	1 (25)	4.5 (114)	1.25 (32)
286*T*	368	22 (559)	26 (660)	68 (1727)	5 (127))	. . .	. . .	. . .	19.25 (489)	9.5 (241)	65.5 (1664)	4.75 (121)	1 (25)	6.5 (165)	1.25 (32)
405*T*	380	22 (559)	26 (660)	80 (2032)	5 (127)	. . .	. . .	. . .	19.25 (489)	9.5 (241)	77.5 (1969)	4.75 (121)	1 (25)	6.5 (165)	1.25 (32)
449*T*	398	22 (559)	26 (660)	98 (2489)	5 (127)	. . .	. . .	. . .	19.25 (489)	9.5 (241)	95.5 (2426)	4.75 (121)	1 (25)	6.5 (165)	1.25 (32)

GENERAL NOTES:
(a) Dimensions in parentheses are approximate equivalents in millimeters.
(b) All other dimensions are in inches.

NOTES:
(1) Motor should not extend beyond end of baseplate.
(2) Contact manufacturer for additional space required for free standing baseplates.
(3) Baseplate number denotes pump frame 1, 2, or 3 and baseplate *HB* in inches.
(4) Includes 0.13 in. (3 mm) shimming allowance where motor height controls.

Not for Resale

(c) Pump Casing Jacket
(d) Bolt on External Heating and Cooling Jacket
(e) Bearing Housing Cooling

4.3.6 Gasket(s). The casing-to-cover gasket shall be confined on the atmospheric side to prevent blowout.

4.4 Impeller

4.4.1 Types. Impellers of open, semi-open, and closed designs are optional.

4.4.2 Adjustment. Means for external adjustment (without disassembly of the pump except for the coupling guard) of the impeller axial clearance shall be provided if adjustment is required by the design.

4.4.3 Balance. Impellers shall meet ISO 1940 Grade 6.3 after final machining.

4.4.4 Attachment. The impeller may be keyed or threaded to the shaft with rotation to tighten. Shaft threads and keyways shall be protected so they will not be wetted by the pumped liquid.

4.5 Shaft

4.5.1 Diameter. The seal mounting surface includes the shaft or shaft sleeve outside diameter within the stuffing box or seal chamber and enough length beyond to accommodate outside seals. The diameter of the seal mounting surface shall be sized in increments of $\frac{1}{8}$ in. (3.2 mm). To provide for the use of mechanical seals, the tolerance on that diameter shall not exceed nominal to minus 0.002 in. (0.05 mm).

4.5.2 Finish. Surface finish of the shaft or sleeve through the stuffing box or seal chamber and at rubbing contact bearing housing seals shall not exceed an arithmetic roughness average of 32 μin. (0.8 μm) unless otherwise required for the mechanical seal.

4.5.3 Runout. Shaft runout shall be limited as follows:

(a) shaft rotated on centers: 0.001 in. (0.025 mm) full indicator movement (FIM) reading at any point;

(b) outside diameter of shaft or removable sleeve when installed in pump: 0.002 in. (0.05 mm) FIM at the gland end of stuffing box or seal chamber (see Fig. 1).

4.5.4 Deflection. Dynamic shaft deflection at the impeller centerline shall not exceed 0.005 in. (0.13 mm) anywhere within the design region as specified in para. 5.1.6. Hydraulic loads and shaft deflection shall be calculated in accordance with HI 1.3.

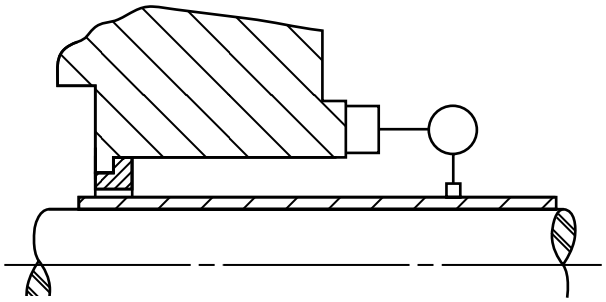

FIG. 1 SHAFT SLEEVE RUNOUT

4.5.5 Running Clearances. Running clearance must be sufficient to prevent internal rubbing contact within the design region (para. 5.1.6) and is subjected to the maximum allowable flange loads as specified in para. 5.1.2.

4.5.6 Critical Speed. The first lateral critical speed of the rotating assembly shall be at least 120% of the maximum operating speed. A ''dry critical speed'' calculation (see HI 9.6.4) is adequate to verify compliance. HI 9.6.4 shall be used to calculate static deflections used for the critical speed calculation.

4.5.7 Fillets and Radii. All shaft shoulder fillets and radii shall be made as large as practical and finished to reduce additional stress risers.

4.6 Shaft Sealing

4.6.1 Design. Two basic types of sealing covers shall be offered, one called a seal chamber and a second called a stuffing box. The seal chamber is designed to accommodate mechanical seals only and can be of several designs for various types of seals. The design includes a separate gland plate where required. The stuffing box is designed for packing, but may be able to accommodate mechanical seals as an alternative. Figures 2 and 3 show some piping systems that can be used with the various seals shown in Fig. 4. A separate universal cover adapter to accommodate either a seal chamber or stuffing box is optional.

4.6.2 Seal Chamber. The seal chamber can be a cylindrical or a tapered design. The tapered bore seal chamber shall have a minimum of a 4 deg taper open toward the pump impeller.

Copyright ASME International
Provided by IHS under license with ASME
No reproduction or networking permitted without license from IHS
Not for Resale

SEAL FLUSH PIPING
RECIRCULATION OF PUMP FLUID

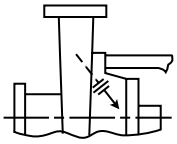

Plan No. 7301

Internal recirculation from pump case to seal.

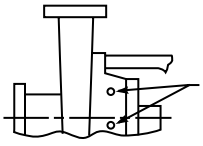

Plan No. 7302

Dead-ended seal chamber with no circulation of flush fluid.

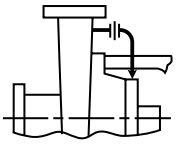

Plan No. 7311

Recirculation from pump case through orifice to seal.

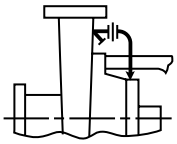

Plan No. 7312

Recirculation from pump case through strainer and orifice to seal.

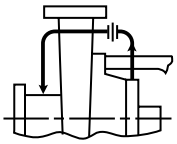

Plan No. 7313

Recirculation from seal chamber through orifice and back to pump suction.

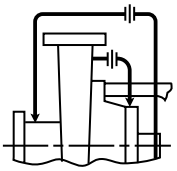

Plan No. 7314

Recirculation from seal chamber through a flow control orifice to the seal and simultaneously from the seal chamber through a control orifice (if required) to pump suction. Plan 14 is a combination of Plan 11 and Plan 13.

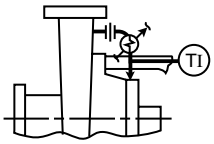

Plan No. 7321

Recirculation from pump case through orifice and cooler to seal.

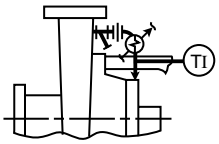

Plan No. 7322

Recirculation from pump case through strainer, orifice and cooler to seal.

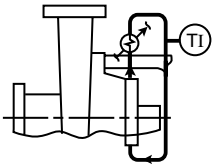

Plan No. 7323

Recirculation from seal with pumping ring through cooler and back to seal.

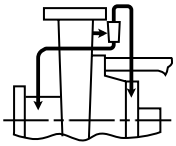

Plan No. 7331

Recirculation from pump case through cyclone separator delivering clean fluid to seal and fluid with solids back to pump suction.

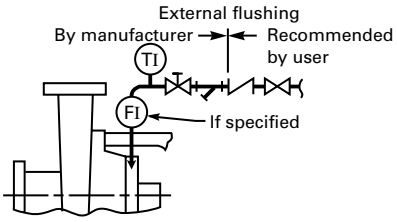

Plan No. 7332

Injection to seal from external source of clean cool/fluid. [Note (1)]

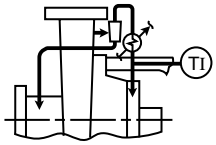

Plan No. 7341

Recirculation from pump case through cyclone separator delivering clean fluid through cooler to seal and fluid with solids back to pump suction.

LEGEND

- (FI) Flow indicator
- (FS) Flow Switch
- (LS) Level Switch
- (PI) pressure gage with block valve
- (PS) pressure switch, including block valve, only when specified.
- (TI) dial thermometer, only when specified
- PCV back pressure regulator
- block valve
- check valve
- flow regulating valve
- cyclone separator
- FIL filter
- heat exchanger
- orifice (removable orifice or an integral pressure breakdown arrangement)
- T trap
- Y-type strainer

FIG. 2 MECHANICAL SEAL PIPING PLANS

Copyright ASME International
Provided by IHS under license with ASME
No reproduction or networking permitted without license from IHS

Not for Resale

BUFFER FLUID AND QUENCH PIPING

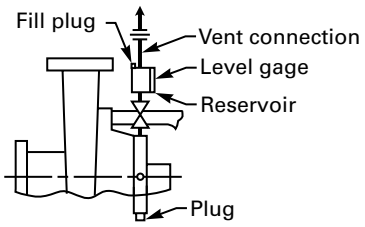

Plan No. 7351
Dead-ended blanket

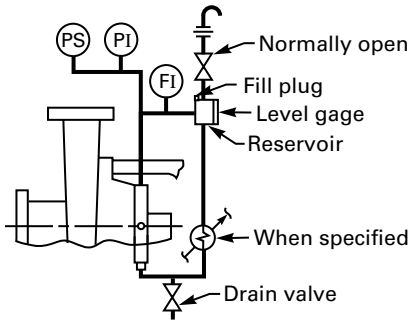

Plan No. 7352
External fluid reservoir for tandem seals. thermosyphon or forced circulation, as required. [Note (1)]

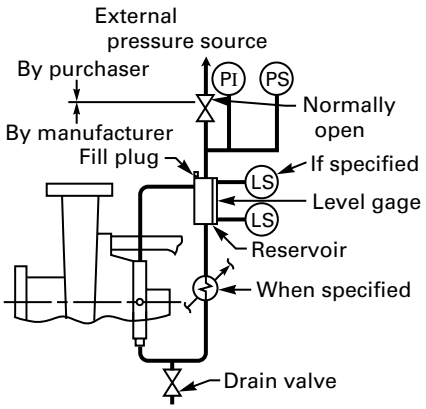

Plan No. 7353A
Pressurized external barrier fluid reservoir supplying clean fluid to the seal chamber. Circulation is by an internal pumping ring. Reservoir pressure is greater than the process pressure being sealed.

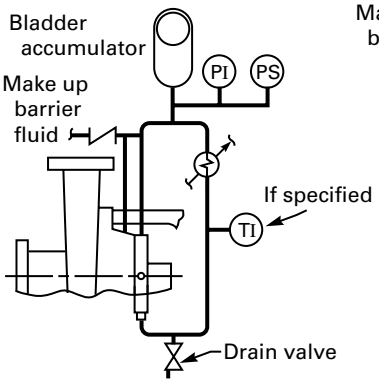

Plan No. 7353B
External piping provides fluid for the outer seal of a pressurized dual seal arrangement. Prepressurized bladder accumulator provides pressure to the circulation system. Flow is maintained by an internal pumping ring. Heat is removed from the circulation system by an air-cooled or water-cooled heat exchanger.

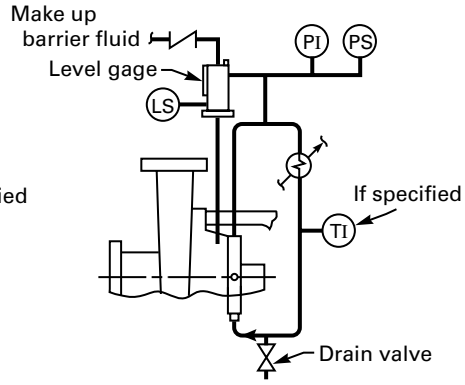

Plan No. 7353C
External piping provides fluid for the outer seal of a pressurized dual seal arrangement. Reference line from the seal chamber to a piston accumulator provides pressure to the circulation system. Flow is maintained by an internal pumping ring. Heat is removed from the circulation system by an air-cooled or water-cooled heat exchanger.

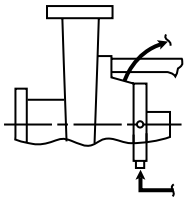

Plan No. 7354
Circulation of clean buffer fluid from an external source. [Note (1)]

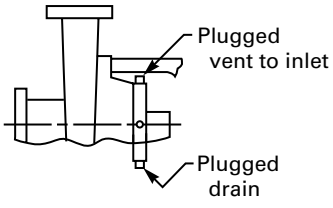

Plan No. 7361
Tapped connections for user's use. Note (1) shall apply when user is to supply fluid (steam, gas, water, other) to auxiliary sealing device.

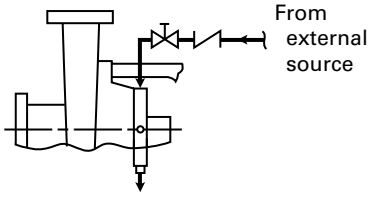

Plan No. 7362
External fluid quench (steam, gas, water, other) [Note (1)]

FIG. 2 MECHANICAL SEAL PIPING PLANS (CONT'D)

Copyright ASME International
Provided by IHS under license with ASME
No reproduction or networking permitted without license from IHS Not for Resale

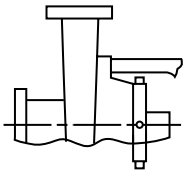

Plan No. 7371

Tapped connections for purchaser's use. Typically this plan is used when purchaser may use buffer gas in the future.

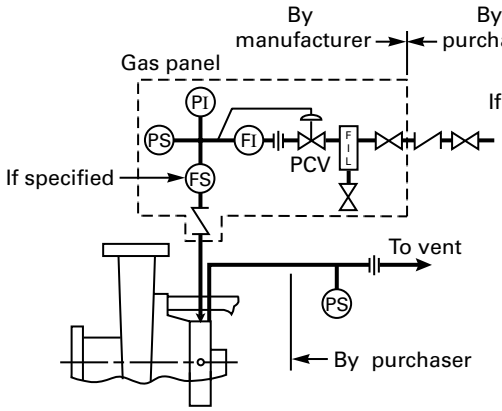

Plan No. 7372

Externally supplied gas buffer used alone to dilute seal leakage or in conjunction with Plan 75 or 76 to help sweep leakage into a closed collection system. Pressure of buffer gas is lower than process side pressure of inner seal.

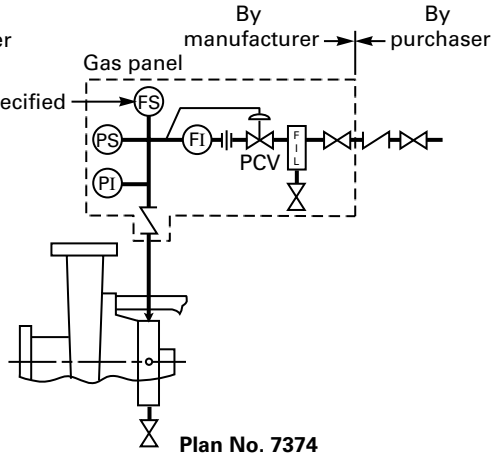

Plan No. 7374

Externally supplied gas barrier gas used to positively prevent process fluid from leaking to atmosphere. Pressure of barrier gas is higher than process side of inner seal. When specified, orifice in barrier gas supply line to be 0.062 in. (1.5 mm).

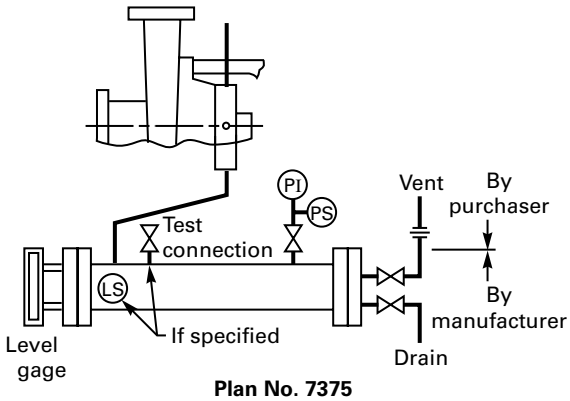

Plan No. 7375

Containment seal chamber drain for condensing leakage. This plan is used when pumped fluid condenses at temperatures. System is supplied by manufacturer.

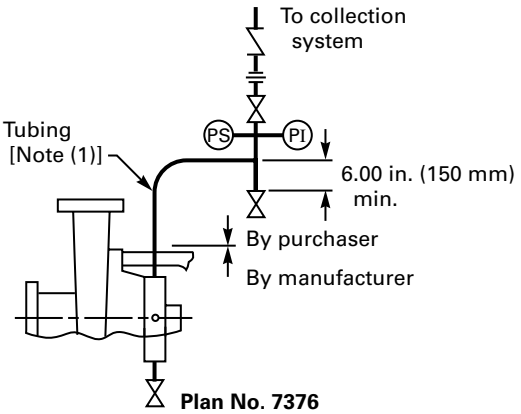

Plan No. 7376

Containment seal chamber drain for noncondensing leakage. This plan is used when pumped fluid does not condense at ambient temperatures. System is supplied by purchaser. Tubing shall rise continuously from the CSV connection to the piping/ instrument harness.

MATERIALS OF CONSTRUCTION

Code A (a) Tubing: carbon steel, $^3/_8$ in. O.D. x 0.035 in. wall ASTM A 519;
(b) Tube Fittings: carbon steel, bite type.

Code B (a) Tubing: 316 stainless steel, $^3/_8$ in O.D. x 0.035 in. wall, ASTM A 269;
(b) tube Fittings: 316 stainless steel, bite type.

Code C (a) Pipe: carbon steel, $^3/_8$ in. nominal Schedule 40, ASTM A 106;
(b) Pipe Fittings: carbon steel, 150 deg ASTM A 105.

Code D (a) Pipe: 316 stainless steel, $^3/_8$ in. nominal Schedule 40, ASTM A 312;
(b) Pipe Fittings: 316 stainless steel, 150 deg ASTM A 182.

Code E (a) Tubing: armored TFE resin with suitable alloy fittings, design pressure of 350 psi (2413 kPa) at 500 °F (260 °C).

Code F (a) Other (specify).

GENERAL NOTE: These plans represent commonly used systems. Other variations are available and should be specified in detail.

NOTE:

(1) User shall specify fluid characteristics when supplemental seal fluid is provided. manufacturer shall specify the required flow rate and pressure where these are factors.

FIG. 2 MECHANICAL SEAL PIPING PLANS (CONT'D)

Copyright ASME International
Provided by IHS under license with ASME
No reproduction or networking permitted without license from IHS
Not for Resale

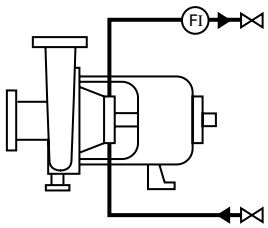

Plan N
Cooling or heating to seal gland

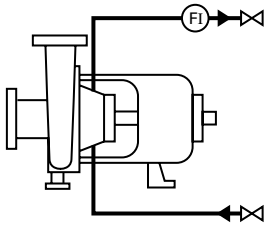

Plan C
Cooling or heating to seal chamber jacket

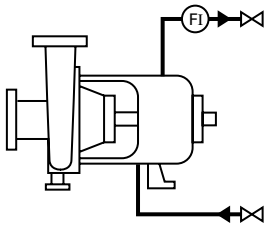

Plan A
Cooling or bearing housing

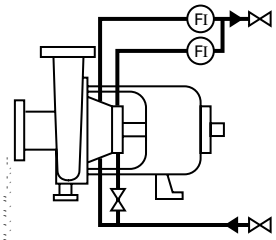

Plan D
Cooling or heating to seal chamber jacket with parallel flow to seal gland

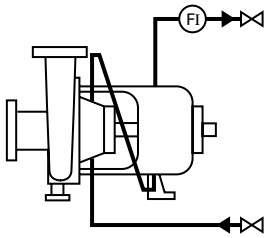

Plan E
Cooling to seal chamber jacket and bearing housing in series

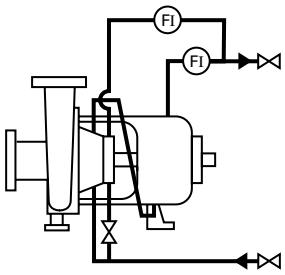

Plan F
Cooling to seal chamber jacket and bearing housing in series with parallel flow to seal gland

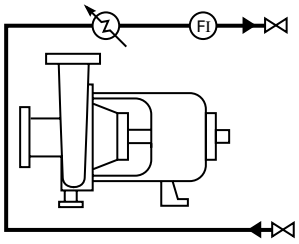

Plan P
Cooling or cooler

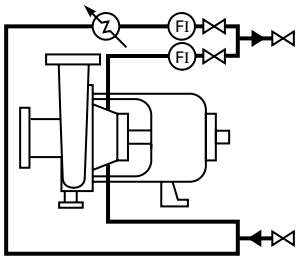

Plan J
Cooling to seal chamber jacket with parallel flow to cooler

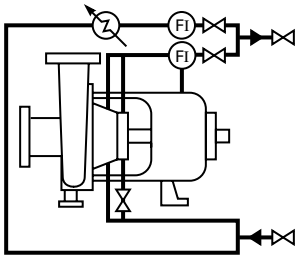

Plan M
Cooling to seal chamber jacket. Seal gland and cooler in parallel.

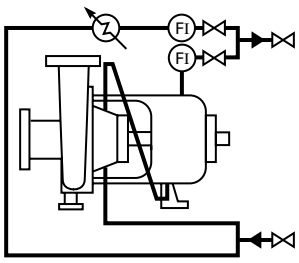

Plan K
Cooling to seal chamber jacket and bearing housing in series with parallel flow to cooler

GENERAL NOTE: Flow indications are optional, furnished only when specified.

FIG. 3 COOLING AND HEATING PIPING PLANS

Copyright ASME International
Provided by IHS under license with ASME
No reproduction or networking permitted without license from IHS Not for Resale

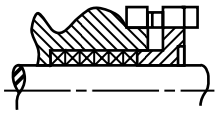

P1: Soft packing without lantern ring

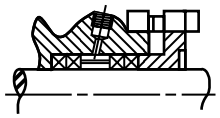

P2: Soft packing with lantern ring. Used for injection or circulation of liquid for sealing, buffering, cooling, etc.

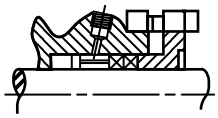

P3: Soft packing with extended bushing throat bushing used for injection or circulation of liquid for cooling, to clear deposits, etc.

Single Mechanical Seal – S
Unbalanced (as is sketches) or balanced with or without circulation or injection to the sealed faces. With or without throat bushing. See Note (1).

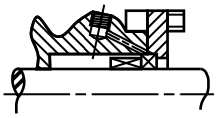

S1: Inside arrangement

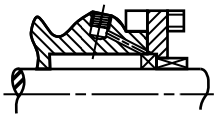

S2: Outside arrangement

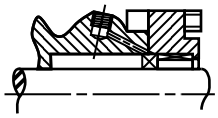

S3: Inside arrangement with rotating seal seat

Multiple Mechanical Seal – D
Either or both may be unbalanced or balanced. See Note (1).

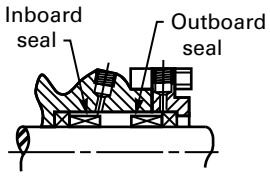

D1: Double arrangement

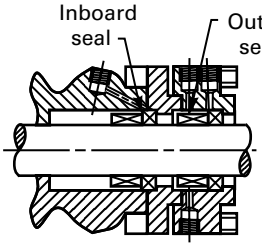

D2: Tandem arrangement

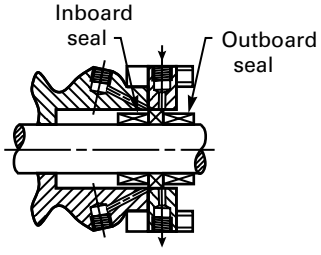

D3: Double arrangement

Quench Arrangement –G
For soft packing, single and double mechanical seal.

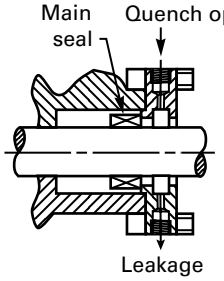

G1: Main seal with throttle bushing

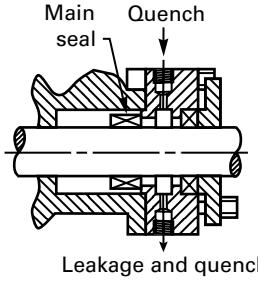

G2: Main seal with auxiliary seal or packing

GENERAL NOTES:
(a) Liquid quench – in at bottom, out at top
(b) Steam or gas quench – in at top , out at bottom

NOTE:
(1) Add “C” to “S” or “D” for cartridge arrangement.

FIG. 4 TYPICAL SEAL ARRANGEMENTS

Copyright ASME International
Provided by IHS under license with ASME
No reproduction or networking permitted without license from IHS
Not for Resale

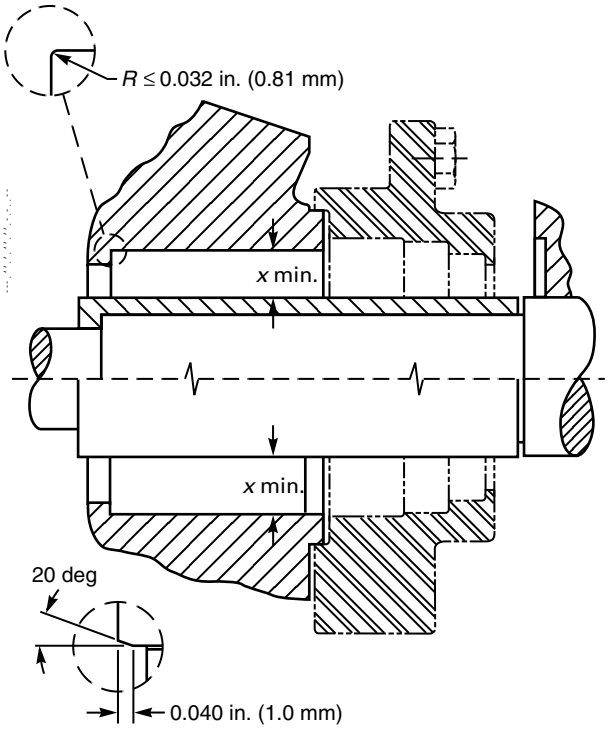

Lead chamfer for o-ring and other sealing devices

Dimension Designation	Radial Clearance x Min.
AA – AB	$x = 3/4$ in. (19.05 mm)
A05 – A80	$x = 7/8$ in. (22.22 mm)
A90 – A120	$x = 1.0$ in. (25.40 mm)

FIG. 5 CYLINDRICAL SEAL CHAMBER

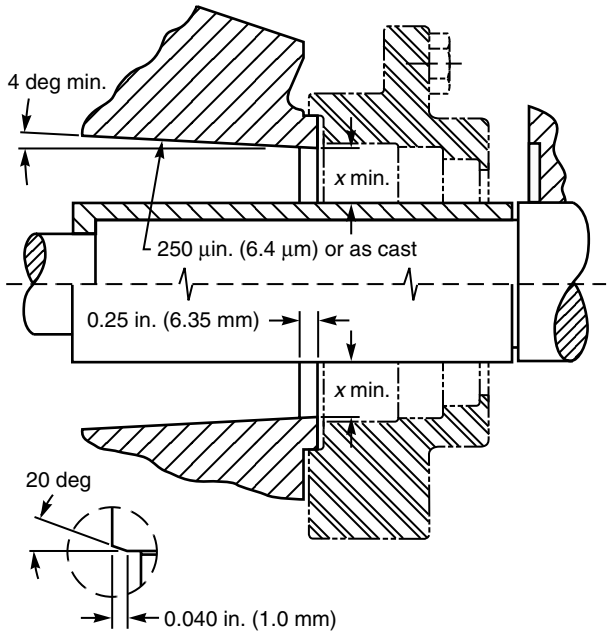

Lead chamfer for o-ring and other sealing devices

Dimension Designation	Radial Clearance x Min.
AA – AB	$x = 3/4$ in. (19.05 mm)
A05 – A80	$x = 7/8$ in. (22.22 mm)
A90 – A120	$x = 1.0$ in. (25.40 mm)

FIG. 6 SELF-VENTING TAPERED SEAL CHAMBER

The seal chamber shall be designed to incorporate the details quantified in Figs. 5 and 6.

The secondary seal contact surface(s) shall not exceed a roughness of 63 μin. (1.6 μm). Seal chamber bore corners and entry holes, such as those used for flushing or venting, shall be suitably chamfered or rounded to prevent damage to secondary seals at assembly.

The seal chamber shall include means of eliminating trapped air or gas. Vent connections, when required for this purpose, shall be located at the highest practical point; drains, when provided, shall be located at the lowest practical point. The location of piping connections to the seal chamber for other functions is optional.

Cartridge seals may center on the shaft and not pilot on the seal chamber.

Pumps equipped with seal chambers experience increased process fluid velocity in the seal chamber and mechanical seal gland area. Any particles in the process fluid, including fluids described as clear that have incidental particles, can collect in this area and cause erosion. Contact the pump manufacturer for solutions that extend the life of the seal chamber and mechanical seal gland.

The size of all piping connections to the seal and seal gland shall be $1/4$ in. NPT min. with $1/2$ in. NPT preferred.

4.6.3 Seal Chamber Runout. Mechanical seal performance is highly dependent on the runout conditions that exist at the mechanical seal chamber. Pump shall be designed for compliance with the runout limits shown below. On smaller sizes, the actual measurement of these runout values may not be possible or practical on an assembled pump. Types of runout having significant effect on seal performance include:

(a) Seal Chamber Face Runout. This is a measure of the squareness of the seal chamber face with respect

Copyright ASME International
Provided by IHS under license with ASME
No reproduction or networking permitted without license from IHS Not for Resale

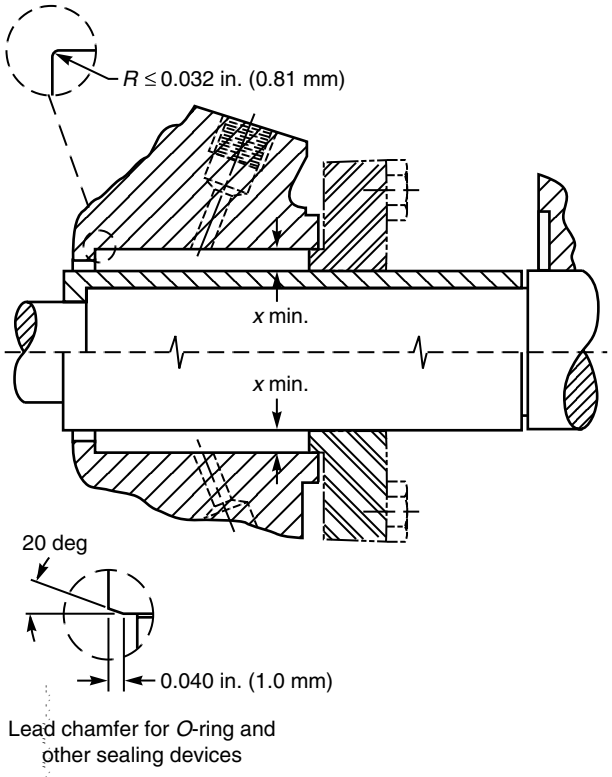

Dimension Designation	Radial Clearance x Min.
AA – AB	$x = {}^{5}/_{16}$ in. (7.94 mm)
A05 – A80	$x = {}^{3}/_{8}$ in. (9.52 mm)
A90 – A120	$x = {}^{7}/_{16}$ in. (11.11 mm)

FIG. 7 STUFFING BOX

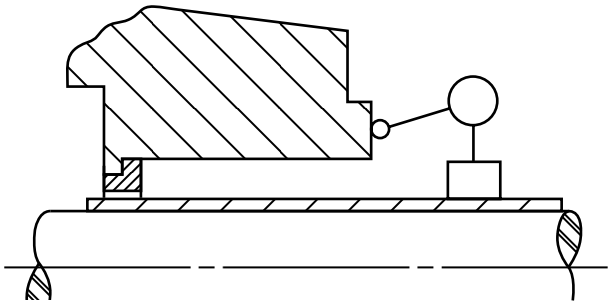

FIG. 8 SEAL CHAMBER FACE RUNOUT

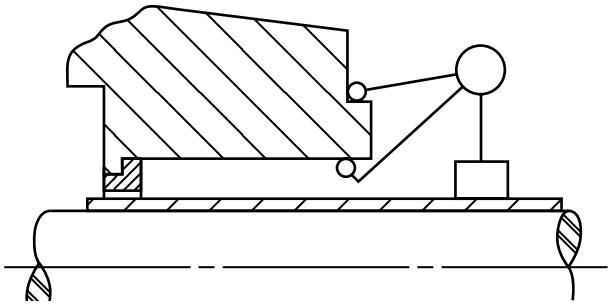

FIG. 9 SEAL CHAMBER REGISTER CONCENTRICITY

to the pump shaft. It is measured by mounting a dial indicator on the pump shaft and measuring FIM at the face of the seal chamber. The maximum allowable runout is 0.003 in. (0.08 mm) FIM (see Fig. 8).

(b) Seal Chamber Register Runout. Provisions shall be made for centering the gland with either an inside or outside diameter register. This register shall be concentric with the shaft or sleeve within 0.005 in. (0.13 mm) FIM (see Fig. 9).

4.6.4 Stuffing Box. The stuffing box packing bore surface shall not exceed a roughness of 63 μin. (1.6 μm). One lantern ring connection shall be provided. A second connection and the location of piping connections to the stuffing box and gland are optional. The size shall be $^{1}/_{4}$ in. NPT min., with $^{1}/_{2}$ in. NPT preferred. Registers shall maintain the stuffing box bore concentric with the axis of the pump shaft within 0.005 in. (0.13 mm) FIM and the stuffing box face perpendicular to the axis of the assembled pump shaft within 0.003 in. (0.08 mm) FIM. Figure 7 shows the recommended stuffing box dimensions.

The box also shall be suitable for proper installation and operation of mechanical seals, including means of eliminating trapped air or gas at the highest practical point.

4.6.5 Space Requirements

4.6.5.1 Space in the various seal chamber designs shall provide for one or more of the following configurations of cartridge or noncartridge seals:

(a) single inside mechanical seal, balanced or unbalanced, with or without a throat bushing, and with or without a throttle bushing

(b) double seal, balanced or unbalanced inboard and outboard

(c) outside mechanical seal, balanced or unbalanced, with or without a throat bushing

(d) tandem seals, either balanced or unbalanced

(e) gas seals

Copyright ASME International
Provided by IHS under license with ASME
No reproduction or networking permitted without license from IHS

Not for Resale

4.6.5.2 Space in the stuffing box and exterior clearance area shall provide for:

(a) five rings of packing plus a lantern ring and repacking space

(b) throat bushing, a lantern ring, and three rings of packing

4.6.6 Gland

4.6.6.1 Bolting. Pumps shall be designed for four gland bolts, but glands shall be:

(a) two-bolt or four-bolt for packing

(b) four-bolt for mechanical seals

Minimum bolt sizes are as follows:

Pump Length, *CP*	Gland Bolt Size
$17\frac{1}{2}$ in. (445 mm)	$\frac{3}{8}$ in
$23\frac{1}{2}$ in. (597 mm)	$\frac{3}{8}$ in
$33\frac{7}{8}$ in. (860 mm)	$\frac{1}{2}$ in

4.6.6.2 Gasket. The gland-to-seal chamber gasket or *O*-ring used for mechanical seals shall be confined on the atmospheric side to prevent blowout. It is acceptable for cartridge seals to pilot off of the shaft and not require a register fit to the seal chamber.

4.6.6.3 Materials of Construction. The mechanical seal gland shall be 316 SS minimum. Reference ASTM A 276 for glands made from wrought bar and ASTM A 744 (CF8M) for glands made from castings. Other materials shall be the purchaser's option.

4.7 Bearings

4.7.1 Design. Two antifriction bearing assemblies shall be provided, one assembly free to float within the frame to carry radial loading only, and the other assembly arranged to carry both radial loading and axial thrust.

4.7.2 Life. Bearings shall be selected in accordance with ABMA 9, ABMA 11, and ISO 281. The minimum L'_{10h} bearing life shall be 17,500 hr in the design region as defined in para. 5.1.6 and for all standard and optional arrangements of bearings, lubrication, shafts, covers, sealing, and impellers.

4.7.3 End Play. End play of the shaft from the thrust bearing and its assembly due to internal bearing clearances and tolerances shall be a minimum to maximize seal and bearing life.

4.7.4 Sealing. Bearing housing shall be constructed to protect the bearings from water, dust, and other contaminants. The design shall allow for the use of lip seals, labyrinths or magnetic oil seals, as appropriate, for bearing housing end seals.

4.7.5 Lubrication. Oil lubrication is standard. Bearing housings for oil bath lubrication shall be provided with a level indicator which is capable of optionally being installed on either or both sides of the bearing housing. A constant level oil feed regulator shall be available, and when provided, be set initially by the manufacturer for the proper level during operation. The proper oil level shall be indicated on the outside of the bearing housing. Other methods of lubrication may be specified, such as oil mist, greased-for-life, or regreaseable lubrication and, when provided, the necessary additional taps shall be provided.

4.7.6 Drain. Bearing housing shall be provided with tapped and plugged drain hole at its lowest point. When replacement grease is specified, a means for grease relief shall be provided.

4.8 Materials of Construction

The identifying material of a pump shall be that of which the major pumpage-wetted parts are constructed. Pump should be available with the following material of construction:

Material	Material Specification
Cast ductile iron	ASTM A 395 (for pressure containing parts) ASTM A 395 or A 536 for non-pressure containing parts
Cast carbon steel	ASTM A 216 - Grade WCB
Cast high alloy steel (similar to 316 stainless steel)	ASTM A 744 - Grade CF8M
Cast Alloy 20	ASTM A 744 - Grade CN7M
Other	Optional

No repair by plugging, peening, or impregnation is allowed on any pressure containing, wetted metal parts.

4.9 Corrosion Allowance

The casing, cover, and gland shall have a corrosion allowance of at least 0.12 in. (3.2 mm).

4.10 Direction of Rotation

Direction of rotation shall be clockwise when viewed from the coupling end. An arrow showing the direction of rotation shall be provided, either cast on the casing

Copyright ASME International
Provided by IHS under license with ASME
No reproduction or networking permitted without license from IHS
Not for Resale

or stamped on a plate of durable construction affixed to the pump in a prominent location.

4.11 Dimensions

Pump dimensions shall conform to Table 1. Baseplate dimensions shall conform to Table 2.

4.12 Miscellaneous Design Features

4.12.1 Safety Guards. As a minimum a coupling guard in accordance with ASME B15.1 shall be furnished on all units that include a pump and driver mounted on a common baseplate. An auxiliary device to control spray from stuffing box/seal chamber leakage shall be provided when specified. Local regulations may require additional guards.

4.12.2 Threads. All threaded parts, such as bolts, nuts, and plugs, shall conform to ANSI standards.

4.12.3 Lifting Rings. A lifting ring or other equivalent device shall be provided to facilitate handling the frame and associated assembly if its mass exceeds 60 lb (27 kg). The frame assembly lifting ring must not be used to lift the entire pump or assembly.

Eyebolts on motors are not suitable for lifting the entire pump and motor assembly. The pump manufacturer's manual shall provide lifting instructions.

4.12.4 Tapped Openings. All tapped openings, including those in the mechanical seal gland which may be exposed to the pumped fluid under pressure, shall be plugged with threaded metal plugs. Plugs normally in contact with the pumped fluid shall be of the same material as the casing, except that carbon steel plugs may be used in ductile iron pumps. Threaded plugs shall not be used in the heating or cooling jackets, including glands with heating or cooling passages; instead, snap-in plugs or waterproof tape shall be used to relieve possible pressure accumulation until piping is installed.

All tapped openings in the mechanical seal gland shall be identified to designate their purpose. This designation should be cast or stamped immediately adjacent to the opening. The markings shall be in accordance with para. 7.3.1. When a steam quench is specified, the inlet connection shall be located at the top quadrant of the mechanical seal gland, and the drain connection shall be located at the bottom position of the mechanical seal gland to prevent the formation of water pockets.

4.12.5 Identification. The manufacturer's part identification number and material designation shall be cast or clearly die stamped or engraved on the casing, cover, and impeller.

4.12.6 Adapter. The bearing frame adapter shall be designed to resist a torque at least as high as the ultimate torque strength of the pump shaft at the coupling end.

The frame adapter or adapter ring, when it clamps the rear cover plate to the pump casing, shall be made of a material which is classified as ductile throughout the full range of operating temperatures, such as cast ductile iron or cast carbon steel.

4.12.7 Baseplates. Baseplates shall be designed according to HI 1.3, para. 1.3.4. Baseplates which are to be freestanding (foot or spring supported rather than held by anchor bolts and grouted) shall be so structurally rigid as to limit the movement of the driver shaft relative to the pump shaft to 0.002 in. (0.05 mm) parallel offset when the driver torque of nameplate horsepower is applied.

5 GENERAL INFORMATION

5.1 Application

5.1.1 Terminology. Terminology shall be in accordance with HI 1.1–1.2.

5.1.2 Flange Loading. Allowable flange loading imposed by the piping shall be in accordance with HI 9.6.2.

5.1.3 Sound. The maximum sound pressure level produced by the pump and driver shall comply with the limit specified by the customer. Test, if specified, shall be conducted in accordance with the standards of HI 9.1/9.5, para. 9.4. Driver noise data must be determined separately.

5.1.4 Vibration. The vibration level measured on the pump bearing housing at the manufacturer's test facility at rated condition point (speed ±5%, flow ±5%) shall not exceed twice the limits shown in Fig. 9.6.4.4 of HI 9.6.4.

5.1.5 Hydraulic Coverage. Tables 3 and 4 show the approximate hydraulic coverage for 50 and 60 Hz.

5.1.6 Operating Region. Pumps shall be designed to operate continuously between 110% of best efficiency flow and the minimum flows shown on Table 5, unless

Copyright ASME International
Provided by IHS under license with ASME
No reproduction or networking permitted without license from IHS
Not for Resale

TABLE 3 APPROXIMATE PERFORMANCE OF STANDARD PUMPS (50 Hz)

Dimension Designation	Size; Suction × Discharge × Nominal Impeller Diameter	1450 rpm				2000 rpm			
		Capacity		Total Head		Capacity		Total Head	
		gpm	m^3/h	ft	m	gpm	m^3/h	ft	m
AA	1.5×1×6	31	7.0	22	6.7	62	14.2	86	26.5
AB	3×1.5×6	62	14.2	22	6.7	125	28.3	86	26.5
AC	3×2×6	104	23.7	22	6.7	217	47.3	86	26.5
*A*10	3×2×6	104	23.7	22	6.7	208	47.2	86	26.5
AA	1.5×1×8	42	9.4	44	13.3	83	18.9	174	52.9
AB	3×1.5×8	83	18.9	44	13.3	167	37.8	174	52.9
*A*50	3×1.5×8	83	18.9	44	13.3	167	37.8	174	52.9
*A*60	3×2×8	125	28.3	44	13.3	250	56.7	174	52.9
*A*70	4×3×8	208	47.2	44	13.3	417	94.6	174	52.9
*A*05	2×1×10	42	9.4	61	18.6	83	18.9	243	74.1
*A*50	3×1.5×10	83	18.9	61	18.6	167	37.8	243	74.1
*A*60	3×2×10	125	28.3	61	18.6	250	56.7	243	74.1
*A*70	4×3×10	250	56.7	61	18.6	500	113.4	243	74.1
*A*40	4×3×10	417	94.6	61	18.6	542	123	243	74.1
*A*80	6×4×10	830	188.6	61	18.6	1077	244.8	243	74.1
*A*20 [Note (1)]	3×1.5×13	166	37.7	104	31.7	331	73.2	412	123.6
*A*30 [Note (1)]	3×2×13	250	56.7	104	31.7	456	103.6	378	115.2
*A*40 [Note (1)]	4×3×13	500	113.6	104	31.7	704	160	275	83.3
*A*80	6×4×13	911	207	104	31.7	. . .	. . .	. . .	. . .
*A*90	8×6×13	1666	378.2	94	28.7	. . .	. . .	. . .	. . .
*A*100	10×8×13	2917	662.2	94	28.7	. . .	. . .	. . .	. . .
*A*105	6×4×15	1250	284.2	139	42.4	. . .	. . .	. . .	. . .
*A*110	8×6×15	1666	348.2	137	42.4	. . .	. . .	. . .	. . .
*A*120	10×8×15	2917	662.2	137	42.4	. . .	. . .	. . .	. . .
*A*105	6×4×17	1500	340.8	174	52.8	. . .	. . .	. . .	. . .
*A*110	8×6×17	2500	568.3	174	52.8	. . .	. . .	. . .	. . .
*A*120	10×8×17	3333	757.5	156	47.9	. . .	. . .	. . .	. . .

GENERAL NOTE: This Standard does not cover exact hydraulic performance of pumps. Information on approximate head and capacity at the best efficiency point for standard pumps is for general information only. Consult manufacturers regarding hydraulic performance data for specific applications.

NOTE:
(1) Maximum impeller diameter may be limited due to limitations of pump's rotor assembly.

specifically noted otherwise by the manufacturer, and meet the requirements of para. 4.5.4 (shaft deflection),para. 4.7.2 (bearing life) and para. 5.1.4 (vibration) when pumping water at ambient conditions.

CAUTION: The values in Table 5 do not consider minimum thermal flow for a specific installation; therefore, the practical minimum operating flow may be higher than shown. Pumpage is heated as it goes through a pump and the minimum thermal flow is that where the temperature rises enough through the pump that recirculation of some of the flow reduces the available net positive suction head below that required by the pump, resulting in cavitation or vaporization of the pumped liquid. Refer to HI 1.3, for detailed application information.

5.1.7 NPSH Margin. An operating NPSH margin is necessary to ensure satisfactory operation. A minimum margin of 3 ft (0.9 m) or a margin ratio of 1.2 (whichever yields a higher NPSH requirement) should be made available. This margin should be increased if variables exist that will increase the NPSH-Required of the pump. Refer to HI 9.6.1 for additional application information.

5.1.8 Performance Curves. Published performance curves in written or electronic format shall be based on tests conducted in accordance with HI 1.6, so the performance shall meet acceptance level ''A''.

Copyright ASME International
Provided by IHS under license with ASME
No reproduction or networking permitted without license from IHS Not for Resale

TABLE 4 APPROXIMATE PERFORMANCE STANDARD PUMPS (60 Hz)

Dimension Designation	Size; Suction × Discharge × Nominal Impeller Diameter	1750 rpm				3500 rpm			
		Capacity		Total Head		Capacity		Total Head	
		gpm	m^3/h	ft	m	gpm	m^3/h	ft	m
AA	1.5×1×6	37	8.4	32	9.8	75	17	125	38.1
AB	3×1.5×6	75	17	32	9.8	150	34	125	38.1
AC	3×2×6	125	28.4	32	9.8	250	56.7	125	38.1
*A*10	3×2×6	125	28.4	32	9.8	250	56.7	125	38.1
AA	1.5×1×8	50	11.3	63	19.2	100	22.7	250	76.2
AB	3×1.5×8	100	22.7	63	19.2	200	45.4	250	76.2
*A*50	3×1.5×8	100	22.7	63	19.2	200	45.4	250	76.2
*A*60	3×2×8	150	34	63	19.2	300	68.1	250	76.2
*A*70	4×3×8	250	56.7	63	19.2	500	113.5	250	76.2
*A*05	2×1×10	50	11.3	88	26.8	100	22.7	350	106.7
*A*50	3×1.5×10	100	22.7	88	26.8	200	45.4	350	106.7
*A*60	3×2×10	150	34	88	26.8	300	68.1	350	106.7
*A*70	4×3×10	300	68.1	88	26.8	600	136.2	350	106.7
*A*40 [Note (1)]	4×3×10	500	113.6	88	26.8	650	147.7	350	106.7
*A*80 [Note (1)]	6×4×10	1000	227	88	26.8	1300	295	350	106.7
*A*20 [Note (1)]	3×1.5×13	200	45.4	150	45.7	400	90.9	600	182.6
*A*30 [Note (1)]	3×2×13	300	68.1	150	45.7	500	114	550	167.6
*A*40 [Note (1)]	4×3×13	600	136.4	150	45.7	850	193.2	400	121.9
*A*80	6×4×13	1100	250	150	45.7	. . .	. . .	. . .	. . .
*A*90	8×6×13	2000	454	135	41	. . .	. . .	. . .	. . .
*A*100	10×8×13	3500	796	135	41	. . .	. . .	. . .	. . .
*A*105	6×4×15	1500	341	200	61	. . .	. . .	. . .	. . .
*A*110	8×6×15	2000	455	200	61	. . .	. . .	. . .	. . .
*A*120	10×8×15	3500	796	200	61	. . .	. . .	. . .	. . .
*A*105	6×4×17	1800	409	250	76	. . .	. . .	. . .	. . .
*A*110	8×6×17	3000	682	250	76	. . .	. . .	. . .	. . .
*A*120	10×8×17	4000	909	225	69	. . .	. . .	. . .	. . .

GENERAL NOTE: This Standard does not cover exact hydraulic performance of pumps. Information on approximate head and capacity at the best efficiency point for standard pumps is for general information only. Consult manufacturers regarding hydraulic performance data for specific applications.

NOTE:

(1) Liquid end may be modified for this condition or maximum impeller diameter may be limited due to limitations of rotor system.

5.2 Test

5.2.1 Hydrostatic. After machining, casings, covers, and jackets shall be hydrostatically tested for 10 min min. with water at 1.5 times the maximum design pressure corresponding to 100°F (38°C) for the material of construction used. No leakage through the part shall be permitted.

5.2.2 Performance. When performance tests are required, they shall be conducted in accordance with HI 1.6, level ''A''. A complete written record of the relevant test information including performance curves, the date of the tests, and the signature of the person(s) responsible for conducting the tests shall be delivered as part of the pump documentation.

5.2.3 Mechanical. When mechanical tests are required, they shall be conducted in accordance with HI 1.6, para. 1.6.7.

5.3 Nameplates

Nameplate(s) shall be of 24 U.S. Std. Gage (minimum) AISI 300 series stainless steel and shall be

Copyright ASME International
Provided by IHS under license with ASME
No reproduction or networking permitted without license from IHS

Not for Resale

TABLE 5 MINIMUM CONTINUOUS FLOW

Dimension Designation	Size; Suction × Discharge × Nominal Impeller Diameter	Minimum Continuous Flow, % *BEP* [Note (1)]	
		3500/2900 rpm 60/50 Hz	1750/1450 rpm 60/50 Hz
AA	1.5×1×6	15	10
AB	3×1.5×6	15	10
AC	3×2×6	20	10
AA	1.5×1×8	20	10
AB	3×1.5×8	20	10
*A*10	3×2×6	20	10
*A*50	3×1.5×8	20	10
*A*60	3×2×8	20	10
*A*70	4×3×8	20	10
*A*05	2×1×10	25	10
*A*50	3×1.5×10	25	10
*A*60	3×2×10	30	15
*A*70	4×3×10	30	15
*A*40	4×3×10	30	15
*A*80	6×4×10	40	20
*A*20	3×1.5×13	30	15
*A*30	3×2×13	40	15
*A*40	4×3×13	40	40
*A*80	6×4×13	. . .	40
*A*90	8×6×13	. . .	40
*A*100	10×8×13	. . .	40
*A*105	6×4×15	. . .	50
*A*110	8×6×15	. . .	50
*A*120	10×8×15	. . .	50
*A*105	6×4×17	. . .	50
*A*110	8×6×17	. . .	50
*A*120	10×8×17	. . .	50

GENERAL NOTE: See para. 5.1.6 for caution using values in this table.

NOTE:
(1) Limits refer to actual hydraulic performance, not the approximate values in Tables 3 and 4. Consult Manufacturers regarding hydraulic performance data for specific applications.

securely attached to the pump. It shall include pump model, standard dimension designation, serial number, size, impeller diameter (maximum and installed), material of construction, and maximum design pressure for 100°F (38°C).

6 REFERENCES

The following documents form a part of this Standard to the extent specified herein. The latest edition shall apply.

ABMA 9, Load Ratings and Fatigue Life for Ball Bearings[1]

ABMA 11, Load Ratings and Fatigue Life for Roller Bearings[1]

Publisher: American Bearing Manufacturers Association (ABMA), 2025 M Street, Washington, DC 20036

ASME B15.1, Safety Standard for Mechanical Power Transmission Apparatus

ASME B16.5, Pipe Flanges and Flanged Fittings

[1] May also be obtained from American National Standards Institute (ANSI), 11 West 42nd Street, New York, NY 10036.

Copyright ASME International
Provided by IHS under license with ASME
No reproduction or networking permitted without license from IHS Not for Resale

ASME B16.42, Ductile Iron Pipe Flanges and Flanged Fittings: Class 150 and 300

Publisher: The American Society of Mechanical Engineers (ASME), Three Park Avenue, New York, NY 10016

ASTM A 105/A 105M, Standard Specification for Carbon Steel Forgings for Piping Applications[1]
ASTM A 106, Standard Specification for Seamless Carbon Steel Pipe for High-Temperature Service[1]
ASTM A 216/A 216M, Standard Specification for Steel Castings, Carbon, Suitable for Fusion Welding, for High Temperature Service[1]
ASTM A 269, Standard Specification for Seamless and Welded Austenitic Stainless Steel Tubing for General Service[1]
ASTM A 276, Standard Specification for Stainless Steel Bars and Shapes[1]
ASTM A 312/A 312M, Standard Specification for Seamless and Welded Austenitic Stainless Steel Pipes[1]
ASTM A 395, Standard Specification for Ferritic Ductile Iron Pressure-Retaining Castings for Use at Elevated Temperatures[1]
ASTM A 519, Standard Specification for Seamless Carbon and Alloy Steel Mechanical Tubing[1]
ASTM A 536, Standard Specification for Ductile Iron Castings[1]
ASTM A 744/A 744M, Standard Specification for Castings, Iron-Chromium-Nickel, Corrosion Resistant, for Severe Service[1]

Publisher: American Society for Testing and Material (ASTM), 100 Barr Harbor Drive, West Conshohockn, PA 19428

HI 1.1–1.2, Centrifugal Pumps — Nomenclature and Definitions[1]
HI 1.3, Centrifugal Pumps — Design and Applications[1]
HI 1.6, Centrifugal Pump Tests[1]
HI 9.1–9.5, Pumps — General Guidelines[1]
HI 9.6.1, Centrifugal and Vertical Pumps — NPSH Margin[1]
HI 9.6.4, Centrifugal and Vertical Pumps — Vibration Measurement and Allowable Values[1]
HI 9.6.2, Centrifugal & Vertical Pumps — Allowable Nozzle Loads[1]

Publisher: Hydraulic Institute (HI), 9 Sylvan Way, Parsippany, NJ 07054-3802

ISO 281, Rolling Bearings — Dynamics Load Ratings and Rating Life

ISO 1940, Balance Quality Requirements of Rigid Rotors

Publisher: International Organization for Standardization (ISO), 1 rue de Varembé, Case Postale 56, CH-1211 Genève 20, Switzerland/Suisse

[1] May also be obtained from American National Standards Institute (ANSI), 11 West 42nd Street, New York, NY 10036.

7 DOCUMENTATION

7.1 General

The documentation specified covers the minimum required to provide clear communication between the pump user and pump manufacturer and to facilitate the safe design, installation, and operation of the pump. Additional data, as required for specific purposes, shall be available, if requested. It is the intent that information be furnished in a similar form from all sources to improve clarity and foster efficient utilization of the documentation.

7.2 Requirements

The following documents shall be supplied for each There can be a difference between proposal and purchase documents:

(a) Pump and driver outline drawing.
(b) Centrifugal pump data sheet.
(c) Mechanical seal drawing (if applicable).
(d) Mechanical seal piping drawing (if applicable).
(e) Vendor's cooling/heating piping drawing (if applicable).
(f) Performance curve with rated point.
(g) Cross-section drawing with parts list.
(h) Instruction manual.
(i) Coupling data.
(j) If specified, certificate of compliance of ASME B73.1 with purchaser's specification.

7.3 Information

A description of each document is as follows.

7.3.1 Pump and Driver Outline Drawing

(a) The pump and driver outline drawing may contain all information shown on and may be arranged as the sample outline drawing included herein and identified as Fig. 10.

(b) Tapped openings, when supplied, shall be identified with the following markings:

Copyright ASME International
Provided by IHS under license with ASME
No reproduction or networking permitted without license from IHS
Not for Resale

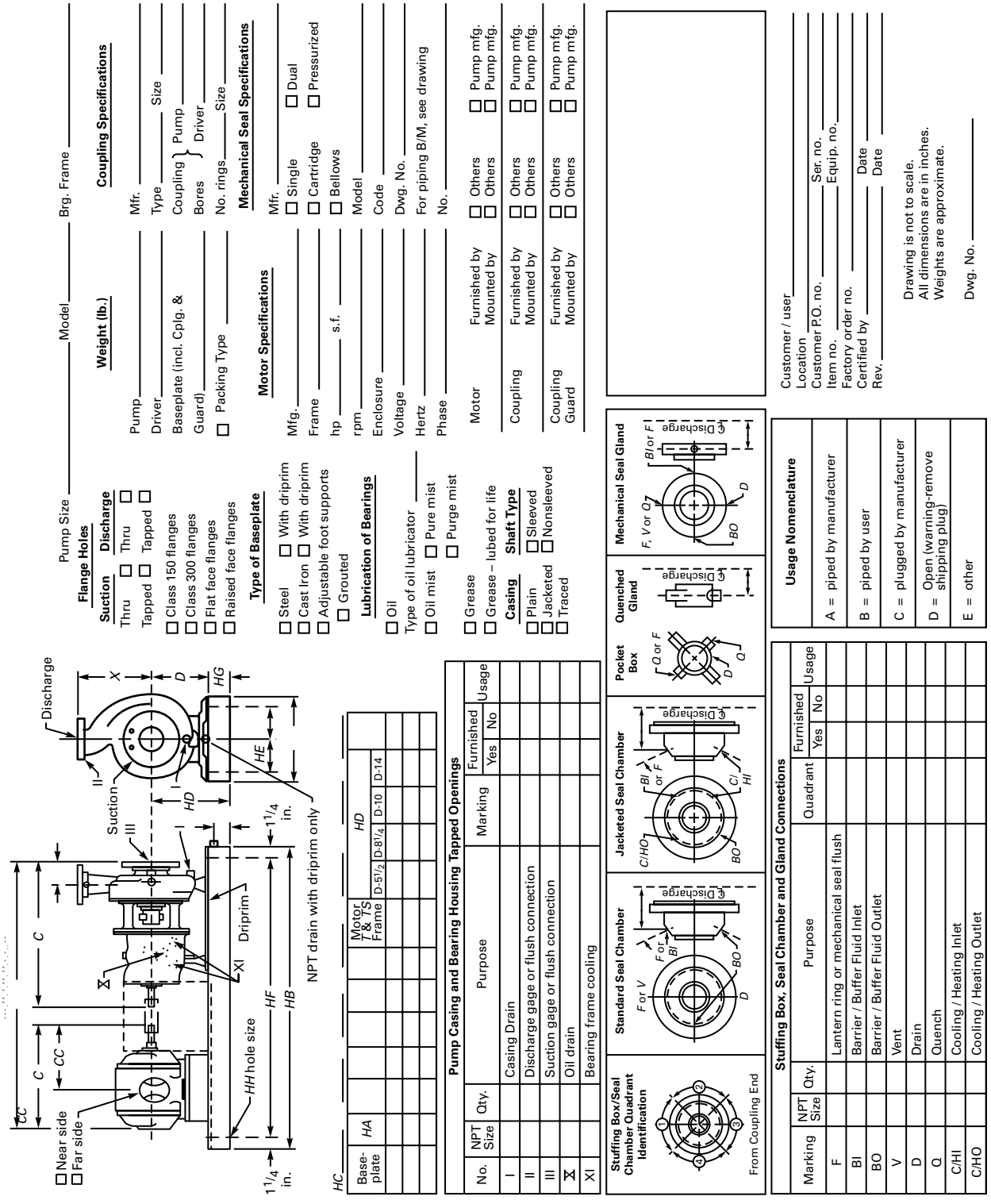

FIG. 10 SAMPLE OUTLINE DRAWING

Copyright ASME International
Provided by IHS under license with ASME
No reproduction or networking permitted without license from IHS
Not for Resale

Marking	Purpose
I	Casing Drain
II	Discharge Gage or Flush Connection
III	Suction Gage or Flush Connection
X	Oil Drain
XI	Bearing Frame Cooling
F	Mechanical Seal Flush or Lantern Ring
FI	Flush Inlet
FO	Flush Outlet
BI	Barrier/Buffer Fluid Inlet
BO	Barrier/Buffer Fluid Outlet
V	Vent
D	Drain
Q	Quench
C/HI	Cooling/Heating Inlet
C/HO	Cooling/Heating Outlet
CSD	Containment Seal Drain
CSV	Containment Seal Vent
GBI	Gas Barrier/Buffer Inlet
GBO	Gas Barrier/Buffer Outlet

7.3.2 Centrifugal Pump Data

(a) Data Sheet. Form A1 or A2 in Nonmandatory Appendix A should be used as the centrifugal pump data sheet.

(b) Electronic Data. The B73 Standardized Electronic Data Exchange File Specification may be used for the electronic transfer of centrifugal pump data (see Table 6).

(c) The data sheet and/or electronic file should be used for inquiry, proposal, and as-built.

7.3.3 Mechanical Seal Drawing

(a) A mechanical seal drawing shall be included if the pump is fitted with a mechanical shaft seal.

(b) The drawing shall show the general arrangement of the mechanical seal, identifying all parts with name, part number and material of construction.

(c) If a throat bushing is to be installed in the seal cavity, it is to be clearly indicated and identified on the seal drawing.

(d) Drawings for non-cartridge seals shall include dimensions complete with the seal setting dimension referenced to the seal chamber face.

(e) The drawings shall have a title block including the information on the title block of the pump data sheet, Form A1 or A2, and have a blank space for the user's identification stamp $1\frac{1}{2}$ in. × 3 in. (38 mm × 76 mm) min.

7.3.4 Mechanical Seal Piping Drawing

(a) A mechanical seal piping drawing or schematic shall be included if the pump is fitted with a mechanical seal piping system supplied by the pump manufacturer.

(b) The mechanical seal piping drawing or schematic may contain all information and uniform nomenclature shown in and may be arranged as the sample drawing included herein and identified as Fig. 2.

7.3.5 Manufacturer's Cooling/Heating Piping Drawing

(a) A cooling/heating piping drawing shall be included if the pump is fitted with a heating/cooling piping system supplied by the pump manufacturer.

(b) The cooling/heating piping drawing may contain all information and uniform nomenclature shown in and may be arranged as the sample drawings included herein and identified as Fig. 3.

7.3.6 Published or Proposal Performance Curve

(a) The performance curve shall be the composite (family) type curve for full impeller diameter range, plotting head against capacity and including efficiency, minimum flow, NPSH, power consumption and speed. Power consumption shall be provided at all flows including shutoff. The design impeller diameter shall be stated with the rated point identified for proposal and as built curves.

(b) If the pumped fluid viscosity or specific gravity affects the pump performance, it shall be so noted on the proposal performance curve.

7.3.7 Cross Section Drawing. The cross section drawing shall show all assembled parts of the pump. It shall be complete with a parts list referenced to the drawing and shall include material descriptions.

7.3.8 Instruction Manual

(a) The instruction manual should include information on the correct installation, preparation for start-up, starting up, operation, trouble checklist, maintenance information, and special tools required for the pump model furnished.

(b) Any limitation or warning on the installation, operation, etc., of the unit should be clearly defined.

(c) The instruction manual shall be in booklet form.

(d) The use of a single manual to describe many similar model of pumps should be minimized to reduce user confusion on the exact model furnished.

(e) Recommended tolerance for coupling alignment-shall be supplied to the user.

(f) Instruction manual for the pump driver, mechanical seal, coupling, etc., shall be furnished by the pump vendor if included as part of their supply.

Copyright ASME International
Provided by IHS under license with ASME
No reproduction or networking permitted without license from IHS

Not for Resale

7.3.9 Certificate of Compliance A certificate of compliance shall be included if specified. This certificate of compliance shall include the necessary evidence and assurance that the pump supplied is being supplied according to the requirements of this Standard and meets additional requirements identified in the purchaser's specification and purchase order. It shall be the purchaser's responsibility to select the manufacturer that is capable and qualified to supply the specified pumping equipment and that maintains the proper credentials for supplying the certificate of compliance.

7.4 Specially Requested Documentation

Documentation in addition to that listed above is sometimes required by some users. This additional documentation shall be made available to those users upon specific request.

7.4.1 Master Document List

(a) This is a composite list of all documents submitted by the manufacturer, including title of document and drawing or other identification numbers, including revision dates.

(b) This list shall be submitted along with the first document in order for the user to be aware of the documents which will follow.

(c) Revisions to this document list shall be made as required.

7.4.2 External Forces and Moments on Nozzles. The allowable external forces and moments on pump suction and discharge nozzles shall be in accordance with para. 5.1.2.

7.4.3 Parts List

(a) A list of all pump parts with pump identification number(s) shall be supplied by the manufacturer.

(b) A list of recommended spare parts shall be supplied by the manufacturer and shall be subdivided into two categories:

(1) for start-up

(2) for 1 year's operation

(c) The pump manufacturer should also furnish a spare parts list for equipment supplied with the pump, but not of their manufacture, as recommended by the manufacturer of that particular equipment. This would include, as applicable, mechanical seal, coupling, driver, gear boxes, etc.

(d) These lists shall be presented to the user before the equipment is shipped, in order to permit obtaining the necessary parts prior to equipment start-up.

7.4.4 Special Operating or Design Data. Special operating and design data required by the user shall be supplied. This may include the following:

(a) Minimum mechanical seal flush flow.

(b) Stuffing box pressure.

(c) Maximum allowable casing pressure and temperature.

(d) Maximum allowable jacket pressure and temperature.

7.4.5 Special Testing, Painting, and Preparation. Any special testing, painting and preparation furnished shall be specified on the centrifugal pump data sheet or purchase order.

--`,,`,,`-`-`,,`,,`,`,,`---

Copyright ASME International
Provided by IHS under license with ASME
No reproduction or networking permitted without license from IHS Not for Resale

TABLE 6 B73 STANDARDIZED ELECTRONIC DATA EXCHANGE FILE SPECIFICATION

No.	Name	Field	Type	Length	Contents/Unit
Pump Data					
Headings					
A001	Job Number	JOB_NO	C	10	
A002	Item Number	JOB_NO	C	25	
A003	Requisition Number	REQ_N	C	25	
A004	Specification Number	SPEC_N	C	25	
A005	Purchase Order Number	PO_NO	C	25	
A006	Purchase Order Date	DATE	D	8	YYYYMMDD
A007	Inquiry Number	INQ_NO	C	25	
A008	Inquiry By	INQ_BY	C	15	
A011	For	FOR	C	59	
A013	Unit	UNIT	C	20	
A014	Site	SITE	C	59	
A015	Number Required	NO_REQD	I	5	
A016	Service	SERVICE	C	30	
A017	Pump Size	PUMP_SIZE	C	30	
A018	Pump Type	PUMP_TYPE	C	20	
A020	Manufacturer	MFGR	C	25	
A021	Model	MODEL	C	20	
A022	Serial Number	SERIAL	C	20	
General					
A023	Operation	OPERATE	C	1	A:parallel; B:series;C: both, series and parallel; Z: other
A027	Number Motor Driven	NO_PMPS_M	I	5	
A028	Number Turbine Driven	NO_PMPS_T	I	5	
A029	With	PUMP_WITH	C	20	
A031	Pump Item Number Turbine Drive	ITEM_NO_T	C	24	
A032	Gear Item Number	G_ITEM_NO	C	24	
A033	Motor Item Number	M_ITEM_NO	C	24	
A034	Turbine Item Number	T_ITEM_NO	C	24	
A035	Gear Provided By	G_BY	C	20	
A036	Motor Provided By	M_BY	C	20	
A037	Turbine Provided By	T_BY	C	20	
A038	Gear Mounted By	G_MTD_BY	C	20	
A039	Motor Mounted By	M_MTD_BY	C	20	
A040	Turbine Mounted By	T_MTD_BY	C	20	
Operating Conditions					
A044	Normal Capacity	NORM_CAP	N	13	m^3/h
A045	Rated Capacity	RATED_CAP	N	13	m^3/h
A047	Suction Pressure Maximum	SUCT_PRESM	N	13	kPa
A048	Suction Pressure Rated	SUCT_PRES	N	13	kPa
A049	Discharge Pressure	DISCH_PRES	N	13	kPa
A050	Differential Pressure	DIFF_PRESS	N	13	kPa
A051	Differential Head	HEAD	N	13	m
A052	NPSH Available	NPSHA	N	13	m
A053	Hydraulic Power	HYD_POWER	N	13	kW
A056	Service	OPER_SERV	C	1	A:continuous; B:Intermittent; Z:other
A057	Starts Per Day	STRTS_PER	I	5	

(continued)

--`,`,-`-`,,`,,`,`,,`---

Copyright ASME International
Provided by IHS under license with ASME
No reproduction or networking permitted without license from IHS

Not for Resale

TABLE 6 B73 STANDARDIZED ELECTRONIC DATA EXCHANGE FILE SPECIFICATION (CONT'D)

No.	Name	Field	Type	Length	Contents/Unit
Site and Utility Data					
A059	Indoor	INDOOR	C	1	1:yes (true); 0:no (false)
A060	Outdoor	OUTDOOR	C	1	1:yes (true); 0:no (false)
A067	Electric Area Classification CL	ELECT_CL	C	6	
A068	Electric Area Classification GR	ELECT_GR	C	6	
A069	Electric Area Classification DIV	ELECT_DIV	C	1	
A072	Altitude	ELEV	N	13	m
A074	Ambient Temperature: Min.	SITE_TM_MIN	N	13	°C
A075	Ambient Temperature: Max.	SITE_TM_MX	N	13	°C
A103	Cooling Water Temperature Inlet	C_WTR_TMIN	N	13	°C
A104	Cooling Water Maximum Return	C_WTR_TMOU	N	13	°C
A108	Cooling Water Maximum Delta P	C_WTR_PRDI	N	13	kPa
Liquid					
A113	Name of Liquid	LIQ_NAME	C	40	
A114	Pumping Temperature Normal	TEMP_NORM	N	13	°C
A115	Pumping Temperature Maximum	TEMP_MAX	N	13	°C
A116	Pumping Temperature Minimum	TEMP_MIN	N	13	°C
A117	Specific Gravity at Normal Temperature	SG_NORM	C	13	
A118	Specific Gravity at Maximum Temperature	SG_MAX	C	13	
A119	Specific Gravity at Minimum Temperature	SG_MIN	C	13	
A126	Corrosive/Erosive Agent	CORROSIVE	C	15	
A129	Hazardous (Toxic)	TOXIC	C	1	1:yes (true); 0:no (false)
A130	Flammable	FLAMMABLE	C	1	1:yes (true); 0:no (false)
A131	Other Liquid Hazard	OTHER_HZRD	C	1	1:yes (true); 0:no (false)
Performance					
A132	Rated Pump Speed	PMP_RPM	N	13	rpm
A133	Proposal Curve Number	PROP_CRV_N	C	15	
A134	Impeller Diameter Rated	IMP_DIA_RA	N	13	mm
A135	Impeller Diameter Maximum	IMP_DI_MAX	N	13	mm
A137	Rated Power	BHP	N	13	kW
A138	Efficiency	EFF	N	13	% (0 to 100)
A139	Minimum Flow: Thermal	MN_FL_THER	N	13	m^3/h
A140	Minimum Flow Stable	MN_FL_STAB	N	13	m^3/h
A141	Maximum Head Rated Impeller	MAX_HEAD	N	13	m
A144	Allowable Operating Region (minimum)	ALWB_OPER1	N	13	m^3/hr
A145	Allowable Operating Region (maximum)	ALBWB_OPER2	N	13	
A146	Maximum Power Rated Impeller	MAX_PWR	N	13	KW
A148	Suction Specific Speed	SP_SPEED	N	13	Metric units (see para. 1.4.42)
A149	Maximum Sound Pressure Level Required	DBA	N	13	DBA
A151	Performance Remark	PERF_REMK	C	140	

(continued)

Copyright ASME International
Provided by IHS under license with ASME
No reproduction or networking permitted without license from IHS Not for Resale

TABLE 6 B73 STANDARDIZED ELECTRONIC DATA EXCHANGE FILE SPECIFICATION (CONT'D)

No.	Name	Field	Type	Length	Contents/Unit
Construction					
A152	Pump Classification ID	PUMP_CLASS	C	3	OVERHUNG TYPE: OH1:foot mounted/horizontal/ flexibly coupled OH2:center line mounted/horizontal/ flexibly coupled OH3:in-line bearing frame/vertical/ flexibly coupled OH4: in-line/vertical/rigidly coupled
A156	Suction Size	SUCT_SIZE	C	10	The decimal numeric value is followed by "mm" or "in.". Example: 1.5 in. or 38 mm
A157	Suction Rating	SUCT_RATE	C	10	
A158	Suction Facing	SUCT_FACE	C	1	A:flat face; B:rated flange; C:ring type joint; D:threaded
A160	Discharge Size	DISCH_SIZE	C	10	The decimal numeric value is followed by "mm" or "in.". Example: 1.5 or 38 mm
A161	Discharge Rating	DISCH_RATE	C	10	
A162	Discharge Facing	DISCH_FACE	C	1	A:flat face; B:rated flange; C:ring type joint; D:threaded
A173	Drain Size	DRN_SIZE	C	10	The decimal numeric value is followed by "mm" or "in.". Example: 1.5 in. or 38 mm
A197	Maximum Allowable Working Pressure	MAWP	N	13	kPa
A198	Reference temperature for MAWP	T_MAWP	N	13	°C
A199	Casing Hydrotest Pressure	CASE_HYD	N	13	kPa
A200	Rotation	ROTATION	C	1	A:CW; B:CCW per Hydraulic Institute; Z:other
A209	Coupling Make	CPLG_MFG	C	15	
A210	Coupling Model	CPLG_MODEL	C	10	
A214	Coupling Spacer Length	CPLG_SPCR	N	13	mm
A221	Non Grout Construction	NON_GROUT	C	1	1:yes (true); 0:no (false)
A224	Coupling remark	CPLG_REMK	C	140	
Materials					
A225	Table H1 material class	MATL_CLASS	C	5	
A227	Barrel/Case Material	MATL_CASE	C	20	
A228	Impeller Material	MATL_IMP	C	20	
A231	Shaft Material	MATL_SHAFT	C	20	
A232	Sleeve Material	MATL_SLEEV	C	20	
A237	Baseplate Material	MATL_BASEPL	C	20	
Bearings and Lubrication					
A239	Radial Bearing Type	RAD_BRG_TY	C	10	
A240	Radial Bearing Number	RAD_BRG/NU	C	10	
A241	Thrust Bearing Type	THR_BRG_TY	C	10	
A242	Thrust Bearing Number	THR_BRG_NO	C	10	
A246	Constant Lever Offer	CONST_LVL	C	1	1:yes (true); 0:no (false)
A250	Oil Viscosity ISO Grade	ISO_VIS	C	15	
A253	Lubrication Remark	LUBE_RMK	C	140	

(continued)

Copyright ASME International
Provided by IHS under license with ASME
No reproduction or networking permitted without license from IHS

Not for Resale

TABLE 6 B73 STANDARDIZED ELECTRONIC DATA EXCHANGE FILE SPECIFICATION (CONT'D)

No.	Name	Field	Type	Length	Contents/Unit
Mechanical Seal or Packing					
A265	Seal Manufacturer	SEAL_MFR	C	15	
A268	Manufacturer Code	SEAL_MFR_C	C	15	
A272	Circulating Device	CIRC_DEV	C	1	1:yes(true); 0:no(false)
A273	Sleeve Material	SLEEVE_MAT	C	10	
A274	Gland Material	GLAND_MATL	C	10	1:yes(true); 0:no(false)
A277	Flush Gland Taps	F_GLAND_TA	C	1	1:yes(true); 0:no(false)
A278	Drain Gland Taps	D_GLAND_TA	C	1	1:yes(true); 0:no(false)
A282	Quench Gland Taps	Q_GLAND_TA	C	1	1:yes(true); 0:no(false)
A290	Flush Minimum Temperature	FLUSH_T_MI	N	13	°C
A291	Flush Maximum Temperature	FLUSH_T_MA	N	13	°C
A292	Specific Gravity	FLUSH_SG	C	13	
A294	Flush fluid Name	FLUSH_FLUI	C	20	
A295	Flush Specific Heat	FLUSH_SP_H	N	13	KJ/Kg°C
A296	Flush vapor pressure	FLUSH_VP	N	13	kPa abs
A297	Flush vapor pressure temperature	FLUSH_VP_T	N	13	°C
A300	Flush Other	FLUSH_OTHE	C	15	
A301	Flush Maximum Flowrate	FLUSH_MAX	N	13	m^3/h
A302	Flush Minimum Flowrate	FLUSH_MIN	N	13	m^3/h
A303	Flush Maximum Pressure	FLUSH_P_MX	N	13	kPa
A304	Flush Minimum Pressure	FLUSH_P_MIN	N	13	kPa
A305	Flush Maximum Temperature	FLSH_T_MX	N	13	°C
A306	Flush Minimum Temperature	FLUSH_T_MIN	N	13	°C
A307	Barrier Minimum Temperature	BARR_TM_MN	N	13	°C
A308	Barrier Maximum Temperature	BARR_TM_MX	N	13	°C
A309	Barrier SG	BARR_SG	C	13	
A311	Barrier Liquid Name	BARR_FLUID	C	20	
A312	Barrier Vapor Pressure	BARR_VP_TM	N	13	kPa abs
A313	Barrier Vapor Pressure Temperature	BARR_VP_TM	B	13	°C
A319	Barrier Maximum Pressure	BARR_PR_MX	N	13	kPa
A320	Barrier Minimum Pressure	BARR_PR_MN	N	13	kPa
A321	Barrier Temperature Maximum	BARR_T_MAX	N	13	°C
A322	Barrier Temperature Minimum	BARR_T_MIN	N	13	°C
A326	Seal Piping Construction	SEAL_PIPE	C	1	A:tubing; B:piping; C:other; Z:other
A327	Piping Material	PIPE_MAT	C	1	A:carbon steel; B:stainless steel; C:other; Z:other
A328	Other Material Description	O_MTL_DESC	C	20	
A330	Aux Piping Plan Construction	AUX_PLAN_T	C	1	A:tubing; B:pipe; Z:other;
A331	Aux Piping Plan Material	AUX_PLAN_M	C	1	A:carbon steel; B:stainless steel; C:other; Z:other
A332	Other Aux Material Description	O_AUX_M_D	C	20	
A337	Seal Flow Indicator	SEAL_FL	C	1	1:yes (true; 0:no(false)
A342	Seal Level Switch Type	SEAL_LS_TY	C	15	
A343	Sea Level Gauge	SEAL_LG	C	1	1:yes (true; 0:no(false)
A346	Mechanical Seal Remarks	SEAL_RMK	C	140	
Cooling Water Piping					
A356	Cooling Water Sight Flow Indicator	SIGHT_FLOW	C	1	1:yes (true); 0:no (false)
A357	Cooling Water Manifold Outlet Valve	MANIFOLD_V	C	1	1:yes(true); 0:no(false)

(continued)

Copyright ASME International
Provided by IHS under license with ASME
No reproduction or networking permitted without license from IHS Not for Resale

TABLE 6 B73 STANDARDIZED ELECTRONIC DATA EXCHANGE FILE SPECIFICATION (CONT'D)

No.	Name	Field	Type	Length	Contents/Unit
A358	Cooling Water Piping Material	CW_PIP_MAT	C	1	A:galvanized pipe; B:copper tube; C:stainless tubing; Z:other
A367	Total Cooling Water Flow	TOTAL_FLOW	N	13	m^3/h
A369	Cooling Water Remark	CW_RMK	C	140	
Instrumentation					
A381	Temperature Gauges	TEMP_GAGES	C	1	1:yes (true); 0:no (false)
A388	Instrument Remark	INST_RMK	C	140	
Motor Drive					
A395	Motor Power	MTR_POWER	N	13	kW
A396	Motor Speed	MTR_SPEED	C	13	RPM
A423	Motor Remark	MTR_RMK	C	140	
Surface Preparation and Painting					
A474	Manufacturer Preparation Standard	PREP_MFR_S	C	1	1:yes (true); 0:no (false)
A475	Prep other	PREP_OTHER	C	20	
A486	Shipment Type	SHP_DEST	C	1	A:domestic; B:export; Z:other
A487	Export Boxing Required	SHP_EXP_BO	C	1	1:yes (true); 0:no (false)
QA Inspection and Test					
A525	Shop Inspection	SHOP_INSP	C	1	1:yes (true); 0:no (false)
A527	Hydrostatic Test	HYD	C	1	1:yes(true); 0:no (false)
A528	Performance Test	PERF	C	1	A:non witnessed; B:witnessed; C:observed; D:none; Z:other
A529	NPSH Test	NPSH	C	1	A:non witnessed; B:witnessed; C:observed; D:none; Z:other
A532	Dismantle After Test	DISM	C	1	A:non witnessed; B:witnessed; C:observed; D:none; Z:other
A538	Other Test Description 1	DESC_OTH_1	C	20	
A539	Other Test 1	TEST_OTH_1	C	1	A:nonwitnessed; B:witnessed; C:observed; D:none; Z:other
A546	Material Certificate for Casing	MAT_CER_CA	C	1	1:yes (true); 0:no (false)
A547	Material Certificate for Impeller	MAT_CER_IM	C	1	1:yes (true); 0:no (false)
A548	Material Certificate for Shaft	MAT_CER_SH	C	1	1:yes (true); 0:no (false)
A549	Material Certificate for Other	MAT_CER_OT	C	20	
A550	Casting Repair Procedure Approval	CAS_REP_PR	C	1	1:yes(true); 0:no(false)
General Remarks					
A573	General Remark 1	GEN_RMK1	C	254	
A574	General Remark 2	GEN_RMK2	C	254	
A575	General Remark 3	GEN_RMK3	C	254	
A576	General Remark 4	GEN_RMK4	C	254	
A577	General Remark 5	GEN_RMK5	C	254	
A578	General Remark 6	GEN_RMK6	C	254	
Additional Data					
Construction					
8009	Coupling Guard Non-Spark	CP_G_N_SP	C	1	1:yes (true); 0:no (false)

(continued)

--`,,`-`-`,,`,,`,`,,`---

Copyright ASME International
Provided by IHS under license with ASME
No reproduction or networking permitted without license from IHS

Not for Resale

TABLE 6 B73 STANDARDIZED ELECTRONIC DATA EXCHANGE FILE SPECIFICATION (CONT'D)

No.	Name	Field	Type	Length	Contents/Unit
Liquid					
B026	Solid Dia	SOLID_DIA	N	13	
Materials					
B032	Guard Material	MTR_MATL	C	20	
PIP Data					
P001	Maximum Capacity	MAX_CAP	N	13	
P002	Minimum Capacity	MAX_CAP	N	13	m^3/h
P003	Suction Pressure Minimum	SUCTPR_MIN	N	13	kPa
P004	Operating Time at Rated Capacity	OPT_RATED	N	5	hr/yr
P005	Operating Time at Maximum Capacity	OPT_MAX	N	5	hr/yr
P006	Operating Time at Normal Capacity	OPT_NORM	N	5	hr/yr
P007	Operating Time at Minimum Capacity	OPT_MIN	N	5	hr/yr
P008	NPSH Available at Rated Capacity	RATED_NPSH	N	13	m
P009	NPSH Available at Maximum Rated Capacity	MAX_NPSH	N	13	m
P010	NPSH Available at Normal Capacity	NORM_NPSH	N	13	m
P011	NPSH Available at Minimum Capacity	MIN_NPSH	N	13	m
P012	System Design	SYS_DESIGN	C	1	A:stand alone; B:parallel; C:series
P013	System Control Method	SYS_CONTRL	C	1	A:speed; B:flow; D:temperature; E:pressure; F:pi
P014	Pumping Temperature Rated	TEMP_RATED	N	13	°C
P015	Specific Gravity at Rated Temperature	SG_RATED	N	13	
P016	Vapor Pressure at Rated Temperature	VP_RATED	N	13	kPa abs
P017	Vapor Pressure at Maximum Temperature	VP_MAX	N	13	kPa abs
P018	Vapor Pressure at Normal Temperature	VP_NORM	N	13	kPa abs
P019	Vapor Pressure at Minimum Temperature	VP_MIN	N	13	kPa abs
P020	Viscosity at Rated Temperature	VISC_RATED	N	13	cP
P021	Viscosity at Maximum Temperature	VISC_MAX	N	13	cP
P022	Viscosity at Normal Temperature	VISC_NORM	N	13	cP
P023	Viscosity at Minimum Temperature	VISC_MIN	N	13	kJ/kg°C
P024	Specific Heat at Rated Temperature	SPHT_RATED	N	13	kJ/kg°C
P025	Specific Heat at Maximum Temperature	SPHT_MAX	N	13	kJ/kg°C
P026	Specific Heat at Normal Temperature	SPHT_NORM	N	13	kJ/kg°C
P027	Specific Heat at Minimum Temperature	SPHT_MIN	N	13	kJ/kg°C

(continued)

--`,`-`-`,,`,,`,`,,`---

Copyright ASME International
Provided by IHS under license with ASME
No reproduction or networking permitted without license from IHS Not for Resale

TABLE 6 B73 STANDARDIZED ELECTRONIC DATA EXCHANGE FILE SPECIFICATION (CONT'D)

No.	Name	Field	Type	Length	Contents/Unit
P028	Initial Boiling Point Temperature	BP_TEMP	N	13	°C
P029	Initial Boiling Point Pressure	BP_PRESS	N	13	kPa abs
P030	NPSH Required at Rated Capacity	NPSHR_RATE	N	13	m
P031	NPSH Required at Maximum Capacity	NPSHR_MAX	N	13	m
P032	NPSH Required at Normal Capacity	NPSHR_NORM	N	13	m
P033	NPSH Required at Minimum Capacity	NPSHR_MIN	N	13	m
P034	Total Differential Head at Rated Impeller	RATED_HEAD	N	13	m
P035	Best Efficiency Point for Rated impeller	BEP	N	13	m^3/h
P036	Non Hazardous Electrical Classification	ELEC_HAZRD	C	1	1:yes(true); 0:no(false)
P037	Impeller Type	IMPLR_TYPE	C	1	A:closed; B:semi-opened; C:opened; D:other
P038	Other Impeller Type	OTHER_IMP	C	15	
P039	Bearing Manufacturer	BRG_MANUF	C	20	
P040	Bearing isolators	BRG_ISOL	C	25	
P041	Shaft Stiffness Ratio (L3/D4)	SS_RATIO	N	13	1/mm
P042	Lubrication	LUBE_TYPE	C	1	A:food; B:grease; C:purge mist; E:sheilded; B:seal
P043	Housing Vent Required	HSG_VENT	C	1	1:yes (true) 0:no (false)
P044	Magnetic Drain Plug In Housing Required	MAG_PLUG	C	1	1:yes (true); 0:no (false)
P045	Oil Cooler Required	OIL_COOLER	C	1	1:yes (true) 0:no (false)
P046	Seal Spray Guard Required	SPRAY_GRD	C	1	1:yes (true) 0:no (false)
P047	Drain Required	DRAIN	C	1	1:yes (true) 0:no (false)
P048	Drain Connection Type	DRAIN_CONN	C	1	A:threaded; B:welded and flanged; Z:other
P049	Cover Material	MATL_COVER	C	25	
P050	Casing Gasket Material	ML_CSG_GKT	C	25	
P051	Impeller Gasket Material	ML_IMP_GKT	C	25	
P052	Casing Fastener Material	ML_CSG_FST	C	25	
P053	Gland Fastener Material	ML_GLD_FST	C	25	
P054	Bearing Housing Material	ML_BRG_HSG	C	25	
P055	Bearing Housing Adapter Material	ML_BRG_HA	C	25	
P056	Bearing Housing End Seals	ML_BRG_ESL	C	25	
P057	Driver Selected For Maximum Specific Gravity	DR_MAX_SG	N	13	
P058	Driver Selected fo Maximum Viscosity	DR_MAX_VSC	N	13	cP
P059	Coupling Type	CPLING_TYPE	C	20	
P060	Coupling Size	CPLING_SIZE	C	20	
P061	Couplingh Guard Manufacturer's Standard	CG_MFG_STD	C	1	1:yes(true) 0:no(false)
P062	Coupling Guard Baseplate Mounted	CG_BP_MNT	C	1	1:yes(true) 0:no(false)
P063	Baseplate Type	BP_TYPE	C	1	A:grouted; B:freestanding; Z:other
P064	Centerline of Pump to Stilt Bottom	CTR_P_TO_S	N	13	mm
P065	Vertical Pump Case Support Bracket	VPC_SUP_BR	C	1	1:yes (true); 0:no (false)
P066	Baseplate Design	BP_DESIGN	C	1	A:PIP standard RESP002; B: manufacturer's standard; Z:other

(continued)

Copyright ASME International
Provided by IHS under license with ASME
No reproduction or networking permitted without license from IHS
Not for Resale

TABLE 6 B73 STANDARDIZED ELECTRONIC DATA EXCHANGE FILE SPECIFICATION (CONT'D)

No.	Name	Field	Type	Length	Contents/Unit
P067	Baseplate Remarks	BP_REMARKS	C	50	
P068	Baseplate Paint	BP_PAINT	C	1	A:Manufacturer's standard; B:Other
P069	Other Baseplate Paint	BP_OTH_PNT	C	20	
P070	Number of Months of Storage	MTH_STRO	N	3	Month
P071	Days Notification Required Final Shop Inspection	DAYS_FI	N	3	Day
P072	Hydrostatic Certificate Required	HYDRO_CRT	C	1	1:yes (true) 0:no (false)
P073	Performance Certificate Required	PERF_CRT	C	1	1:yes (true) 0:no (false)
P074	NPSHR Certificate Required	NPSH_CRT	C	1	1:yes (true) 0:no (false)
P075	Vibration Test	VIBRATION	C	1	A:non-witnessed; B:witnessed; C:none; Z:other
P076	Vibration Certificate Required	VIBE_CRT	C	1	1:yes (true) 0:no (false)
P077	Other Test Certificate Required	TST_OT_CRT	C	1	1:yes (true) 0:no (false)
P078	Material Certificate for Cover	MAT_CER_CV	C	1	1:yes (true) 0:no (false)
P079	Inspection for Connection Welds	CONN_INSP	C	1	A:manufacturer's standard; B:visual inspection; C:none; Z:other
P080	Inspections for Castings	CAST_INSP	C	1	A:manufacturer's standard; B:visual inspection; C:none Z:other
P081	Other Inspection Required for Castings	OTH_CINSP	C	25	
P082	For Vendor Data Requirements Refer to:	VNDR_DATA	C	15	
P083	Manufacturer Documentation Remarks	MD_REMARKS	C	00	
P084	Mechanical Seal Supplied By	MS_SUPP_BY	C	1	A:pump manufacturer; B:purchaser; Z:other
P085	Mechanical Seal Mounted By	MS_MNT_BY	C	1	A:pump manufacturer; B:purchaser; Z:other
P086	Seal Classification Code	MS_CODE	C	5	
P087	Seal Model	SEAL_MODEL	C	25	
P088	Cartridge or Component Seal Type	MS_TYPE_CC	C	1	A:cartridge; B:component; Z:other
P089	Seal Design Type	SEAL_DSGN	C	1	A:single; B:dual; C:dry gas; D:liquid dual; Z:other
P090	Seal Pressurized or Unpressurized Type	SEAL_PRTYP	C	1	A:pressurized; B:unpressurized
P091	Seal Chamber	SEALI_CHAM	C	1	A:taper bore; B:cylidrical bore; Z:other
P092	Seal Chamber Size	SEAL_CHSIZ	C	1	A:oversized; B:standard; Z:other
P093	Throat Bushing Required	THRO_B	C	1	1yes (true) 0:no (false)
P094	Throat Bushing Material	THRO_B_MAT	C	20	
P095	Other Taps Required	OT_TAP	C	1	1yes (true) 0:no (false)
P096	Other Taps Required Description	OSC_OT_TAP	C	20	
P097	Throttle Bushing Required	THRT_B	C	1	1yes (true) 0:no (false)
P098	Throttle Bushing Material	THRT_B_MAT	C	20	
P099	Primary Flush Plan Number	PR_PI_PL	C	1	A:none; B:ASME Plan 7301; C:ASME Plan 7302; D:ASME Plan 7311
P100	Primary Flush Piping/ Tubing Size	PR_FL_SIZE	N	5	mm
P101	Primary Flush Piping Assembly	PR_FL_ASM	C	1	A:threded; B:unions; C:flanged; D:tube type fittings; E:s
P102	Barrier Flush Plan	BR_PI_PL	C	1	A:none; B:ASME Plan 7351; C:ASME Plan 7352; D:ASME Plan 7353
P103	Barrier Fluid Specific heat	BR_FL_SH	N	13	kJ/kg°C
P104	MAWP of Secondary Seal System	BR_MAWP	N	13	kPa

(continued)

--`-`-`,,`,,`,`,,`---

Copyright ASME International
Provided by IHS under license with ASME
No reproduction or networking permitted without license from IHS Not for Resale

TABLE 6 B73 STANDARDIZED ELECTRONIC DATA EXCHANGE FILE SPECIFICATION (CONT'D)

No.	Name	Field	Type	Length	Contents/Unit
P105	Barrier Flush Piping/Tubing Size	BR_FL_SIZE	N	13	mm
P106	Barrier Flush Piping Assembly	BR_FL_ASM	C	1	A:theaded; B:unions; C:flanged; D:tube fittings; E:socket welded
P107	Primary Seal Flow Gauge Required	SEAL_PFG	C	1	1:yes (true) 0:no (false)
P108	Primary Seal Flow Switch Required	SEAL_PFS	C	1	1:yes (true) 0:no (false)
P109	Primary Seal Temperature Switch Required	SEAL_PTS	C	1	1:yes (true) 0:no (false)
P110	Primary Seal Pressure Gauge Required	SEAL_PPG	C	1	1:yes (true) 0:no (false)
P111	Primary Seal Pressure Switch Required	SEAL_PPS	C	1	1:yes (true) 0:no (false)
P112	Secondary Seal Flow Switch Required	SEAL_PSS	C	1	1:yes (true) 0:no (false)
P113	Secondary Seal Pressure Gauge	SEAL_SPG	C	1	1:yes (true) 0:no (false)

GENERAL NOTE: This table is composed of the applicable fields from Appendix Q, ANSI/API 610, Centrifugal Pumps for Petroleum, Heavy-Duty Chemical and Gas Industry Services, with the addition of data fields from the Process Industry Practices (PIP) specification that completely define necessary data for the electronic exchange of ASME B73 pump data. See Appendix Q, API 610 for complete information on the neutral data exchange file format.

Copyright ASME International
Provided by IHS under license with ASME
No reproduction or networking permitted without license from IHS

Not for Resale

NONMANDATORY APPENDIX A
ASME CENTRIFUGAL PUMP DATA SHEET

This data sheet was provided by the Process Industry Practices Initiative (PIP). Copies of the data sheet may be obtained from PIP through their website at http://www.pip.org.

--`,`-`-`,,`,,`,`,,`---

Copyright ASME International
Provided by IHS under license with ASME
No reproduction or networking permitted without license from IHS

Not for Resale

PIP

FORM A1 ASME CENTRIFUGAL PUMP

Data Sheet (US Customary Units)

RESP73
PAGE 1 of 3
November 2000

Job Number _____ Item Number _____ Purchase Order Number _____ Date _____

Req./Spec. Number _____ / _____ Inquiry Number _____ By _____

Note: ○ Indicates Information Completed by Purchaser ☐ by Manufacturer ☒ by Purchaser or Manufacturer

○ For _____ ○ Unit _____

○ Site _____ ○ Service _____

○ No. Req. _____ ☒ Pump Size _____ ☒ Type _____

☒ Manufacturer _____ ☒ Model _____ ☐ Serial Number _____

○ GENERAL

○ Number Motor Driven _____ ○ Number Turbine Driven _____ ○ Gearbox Item Number _____

○ Motor Item Number _____ ○ Turbine Item Number _____ ○ Gearbox Provided By _____

○ Motor Provided By _____ ○ Turbine Provided By _____ ○ Gearbox Mounted By _____

○ Motor Mounted By _____ ○ Turbine Mounted By _____

○ OPERATING CONDITIONS

	Rated	Max.	Normal	Min.
Capacity (gpm)				
Suction Pressure (psig)				
Discharge Pressure (psig)				
Differential Pressure (psi)				
Differential Head (ft.)		@ Minimum S.G.		
Hydraulic Power (hp)				

At Designated Capacity	Rated	Max.	Normal	Min.
Operating Time (hr./yr.)				
NPSH Availabl (ft.)				

System Design

○ Stand Alone Operation ○ Parallel Operation

○ Series Operation with Item Number _____

Suction Pressure Min./Max. _____ / _____ (psig)

Service

○ Continuous ○ Intermittent (Starts/Day) _____

System Control Method

○ Speed ○ Flow ○ Level ○ Temperature

○ Pressure ○ Pipe Friction Resistance Only

○ PUMPED FLUID

Pumped Fluid _____

	Rated	Max.	Normal	Min.
Pumping Temperature (˚F)				

At Designated Temperature	Rated	Max.	Normal	Min.
Specific Gravity				
Vapor Pressure (psia)				
Viscosity (cp)				
Specific Heat (BTU/Lb. ˚F)				

Initial Boiling Point _____ (˚F) @ _____ (psia)

Liquid ○ Hazardous ○ Flammable

○ Other _____

Corrosion/Erosion Caused By _____

% Solid _____ Max. Particle Size _____ (in.)

○ PERFORMANCE

☐ Performance Curve No. _____ ☒ Speed (rpm) _____

Measured at Capacity	Rated	Max.	Normal	Min.
☐ NPSH Req'd (ft.)				

☐ Total Differential Head @ Rated Impeller _____ (ft.)

☐ Max. Differential Head @ Rated Impeller _____ (ft.)

☐ Minimum Continuous Flow

Thermal (gpm) _____ Stable (gpm) _____

☐ Allowable Operating Region _____ To _____ (gpm)

☐ Best Efficiency Point for Rated Impeller _____ (gpm)

☐ Suction Specific Speed _____

☐ Impeller Diameter Rated _____ Max. _____ Min. _____ (In.)

☐ Pump Rated Power _____ (bhp) ☐ Efficiency _____ (%)

☐ Maximum Power @ Rated Impeller _____ (bhp)

Rotation (Viewed from Coupling End) ☐ CW ☐ CCW

Case Pressure Rating

☐ Max. Allowable Working Pressure _____ (psig)

@ _____ (˚F)

☐ Hydrostatic Test Pressure _____ (psig)

○ SITE CONDITIONS

Location ○ Indoor ○ Outdoor

Altitude _____ (ft.)

Range of Ambient Temperatures Min./Max. _____ / _____ (˚F)

Electrical Classification CL. _____ Gr. _____ Div. _____

○ Non Hazardous

○ GENERAL REMARKS

REV	DATE	REASON FOR REVISION	BY	CHECK	APPROVED
4					
3					
2					
1					
0					

--`,,`,,`-`-`,,`,,`,`,,`---

Copyright ASME International
Provided by IHS under license with ASME
No reproduction or networking permitted without license from IHS
Not for Resale

PIP

FORM A1 ASME CENTRIFUGAL PUMP
Data Sheet (US Customary Units)

RESP73
PAGE 2 of 3
November 2000

Job Number _____ Item Number _____ Purchase Order Number _____ Date _____
Req./Spec. Number _____/_____ Inquiry Number _____ By _____

☐ MECHANICAL DATA

Impeller Type
☐ Closed ☐ Open
☐ Semi-open ☐ Other _____
Casing Mounting
☐ Foot ☐ Centerline
☐ Vertical Inline ☐ Close-coupled
Bearings
☐ Bearings Manufacturer _____
☐ Radial Bearing Type _____ No. _____
☐ Thrust Bearing Type _____ No. _____
☐ Bearing Isolators _____
☐ Shaft Stiffness Ratio (L^3/D^4) _____
Lubrication
○ Flood ○ Pure Mist ○ Shielded (Grease)
○ Grease ○ Purge Mist ○ Sealed (Grease)
○ Constant Level Oiler Required
☐ Housing Vent Required
○ Magnetic Drain Plug in Housing Required
☐ Oil Cooler Required
○ Seal Spray Guard Required
☐ Oil Viscosity ISO Grade _____
☐ Other _____

Nozzle Connections ☐ Size ☐ Rating ☐ Facing

Suction			
Discharge			

Aux. Case Connection ○ Drain Required
☐ Size _____ (In.)
○ Threaded ○ Welded and Flanged

☐ MATERIALS

Material Class Code _____
Casing _____
Impeller _____
Cover _____
Shaft _____
Shaft Sleeve _____
Baseplate _____
Casing Gasket _____
Impeller Gasket _____
Casing Fasteners _____
Bearing Housing _____
Bearing Housing Adapter _____
Bearing Housing End Seals _____
Coupling Guard _____
Mechanical Seal Gland _____
Mechanical Seal Gland Fasteners _____

☐ DRIVER

Horsepower Rating _____ (hp) Speed _____ (rpm)
Drive HP Selected or Max. S.G. _____ & Max. Visc. _____ (cp)
Remarks _____

☐ COUPLING BETWEEN PUMP AND DRIVER

Manufacturer _____
Type _____
Size _____
Model _____
Spacer Length (In.) _____
Coupling Guard Type
☐ Manufacturer's Standard
☐ Baseplate Mounted
☐ Non-Spark Coupling Guard Required
Remarks _____

☐ BASEPLATE

Remarks ○ Grounded ○ Free Standing
☐ Centerline of Pump to Stilt Bottom _____ (In.)
○ Vertical Pump Case Support Bracket
Design ○ PIP Standard RESP002 (Data Sheet Attached)
○ Manufacturer's Standard
Remarks _____

PAINT AND SHIPMENT PREPARATION

Pump
○ Manufacturer's Standard
○ Other _____

Baseplate
○ Manufacturer's Standard
○ Other _____

Shipment
○ Domestic ○ Export ○ Export Boxing Required
○ Number of Months of Storage _____
Total Weight _____ (Lbs.)

INSPECTION AND TESTING

○ Final Inspection Required ○ Days Notification Required ____

Test	Non-Witnessed	Witnessed	Certificate
Hydrostatic	○	○	○
Performance	○	○	○
NPSHR	○	○	○
Vibration	○	○	○
Other	○	○	○

○ Dismantle and Inspect After Test
○ Casting Repair Procedure Approval Required
Material Certification Required
○ Casing ○ Cover ○ Impeller ○ Shaft
○ Other _____
Inspection Required for Connection Welds
○ Manufacturer's Standard ○ Visual Inspection
Inspection Required for Castings
○ Manufacturer's Standard ○ Visual Inspection
○ Other _____

MANUFACTURER DOCUMENTATION REQUIREMENTS

○ For Vendor Data Requirements Refer to: _____
Remarks _____

Copyright ASME International
Provided by IHS under license with ASME
No reproduction or networking permitted without license from IHS
Not for Resale

PIP

FORM A1 ASME CENTRIFUGAL PUMP
Data Sheet (US Customary Units)

RESP73
PAGE 3 of 3
November 2000

Job Number _____ Item Number _____ Purchase Order Number _____ Date _____
Req./Spec. Number _____ / _____ Inquiry Number _____ By _____

☐ MECHANICAL SEAL

Supplied By ○ Pump Manufacturer ○ Purchaser
Mounted By ○ Pump Manufacturer ○ Purchaser
Seal Classification Code _____
☐ Manufacturer _____
☐ Model _____
☐ Manufacturer Code _____
Seal Type ○ Cartridge ○ Component
Seal Design ○ Single ○ Dual ○ Dry Gas
○ Pressurized ○ Unpressurized
Seal Chamber ○ Taper Bore ○ Cylindrical Bore
Seal Chamber Size ○ Oversized ○ Standard
_____
☐ Pumping Ring Required
☐ Throat Bushing Required ☐ Materials _____
Remarks _____

☐ SEAL GLAND

Taps Required ○ Quench ○ Flush ○ Drain
○ Other _____
☐ Throttle Bushing ☐ Materials

☐ SEAL FLUSHING

Primary Flush Plan No. _____
○ External Flush Liquid _____
○ Supply Temperature Min./Max. _____ / _____ (˚F)
○ Specific Gravity _____
○ Specific Heat _____ (BTU/Lb. ˚F)
○ Vapor Pressure _____ (psia) @ _____ (˚F)
☐ Flow Rate Required Min./Max. _____ / _____ (gpm)
☐ Pressure Required Min./Max. _____ / _____ (psig)
☐ Temperature Required Min./Max. _____ / _____ (˚F)
Primary Seal Flush Piping
○ Tubing ○ Pipe ○ Other _____
Material ○ 316SS ○ Carbon Steel
○ Other _____
○ Piping/Tubing Size _____ (In.)
Piping Assembly ○ Threaded ○ Unions ○ Flanged
○ Tube Type Fittings ○ Socket Welded
Remarks _____

☐ BARRIER/BUFFER FLUSH SYSTEM

Barrier Flush Plan _____
○ Barrier Flush Liquid _____
○ Temperature Min./Max. _____ / _____ (˚F)
○ Specific Gravity _____
○ Specific Heat _____ (BTU/Lb. ˚F)
○ Vapor Pressure _____ (psia) @ _____ (˚F)
☐ Pressure Required Min./Max. _____ / _____ (psig)
☐ MAWP of Secondary Seal System _____ (psig)
○ Temperature Required Min./Max. _____ / _____ (˚F)
Secondary Seal Flush Piping ○ Tubing ○ Pipe
Material ○ 316SS ○ Carbon Steel
○ Other _____
○ Piping/Tubing Size _____ (In.)
Piping Assembly ○ Threaded ○ Unions ○ Flanged
○ Tube Type Fittings ○ Socket Welded
Remarks _____

SEAL SYSTEM INSTRUMENTATION

	Gauges	Switches
Primary Seals		
Flow	○	○
Temperature	○	○
Pressure	○	○
Secondary Seals		
Flow	○	○
Pressure	○	○
Level	○	○

Remarks _____

☐ COOLING OR HEATING PIPING PLANS

○ Piping Plan No. _____
○ Name of Fluid _____
○ Inlet Temperature _____ (˚F)
○ Outlet Temperature _____ (˚F)
☐ Rated Flow _____ (gpm)
☐ Supply Pressure _____ (psig)
☐ Max. Allowable ΔP _____ (psi)

○ Galvanized Pipe ○ SS Tubing
○ Sight Flow Indicator
○ Outlet Shut-Off Valve
Remarks _____

Copyright ASME International
Provided by IHS under license with ASME
No reproduction or networking permitted without license from IHS
Not for Resale

PIP

FORM A2 ASME CENTRIFUGAL PUMP
Data Sheet (SI Units)

RESP73
PAGE 1 of 3
November 2000

Job Number _____ Item Number _____ Purchase Order Number _____ Date _____
Req./Spec. Number _____ / _____ Inquiry Number _____ By _____

Note: ○ Indicates Information Completed by Purchaser ☐ by Manufacturer ☒ by Purchaser or Manufacturer

○ For _____ ○ Unit _____
○ Site _____ ○ Service _____
○ No. Req. _____ ☒ Pump Size _____ ☒ Type _____
☒ Manufacturer _____ ☒ Model _____ ☒ Serial Number _____

○ GENERAL

○ Number Motor Driven _____ ○ Number Turbine Driven _____ ○ Gearbox Item Number _____
○ Motor Item Number _____ ○ Turbine Item Number _____ ○ Gearbox Provided By _____
○ Motor Provided By _____ ○ Turbine Provided By _____ ○ Gearbox Mounted By _____
○ Motor Mounted By _____ ○ Turbine Mounted By _____

○ OPERATING CONDITIONS

	Rated	Max.	Normal	Min.
Capacity (m^3/h)				
Suction Pressure (kPa)				
Discharge Pressure (kPa)				
Differential Pressure (kPa)				
Differential Head (m)		@ Minimum S.G.		
Hydraulic Power (kW)				
At Designated Capacity	Rated	Max.	Normal	Min.
Operating Time (hr./yr.)				
NPSH Availabl (m)				

System Design
○ Stand Alone Operation ○ Parallel Operation
○ Series Operation with Item Number _____
Suction Pressure Min./Max. _____ / _____ (kPa)

Service
○ Continuous ○ Intermittent (Starts/Day) _____

System Control Method
○ Speed ○ Flow ○ Level ○ Temperature
○ Pressure ○ Pipe Friction Resistance Only

○ PUMPED FLUID

Pumped Fluid _____

	Rated	Max.	Normal	Min.
Pumping Temperature (˚C)				
At Designated Temperature	Rated	Max.	Normal	Min.
Specific Gravity				
Vapor Pressure (kPa abs)				
Viscosity (cp)				
Specific Heat (kJ/kg ˚C)				

Initial Boiling Point _____ (˚C) @ _____ (kPa abs)
Liquid ○ Hazardous ○ Flammable
○ Other _____

Corrosion/Erosion Caused By _____
% Solid _____ Max. Particle Size _____ (mm)

○ PERFORMANCE

☐ Performance Curve No. _____ ☒ Speed (rpm) _____

Measured at Capacity	Rated	Max.	Normal	Min.
☐ NPSH Req'd (m)				

☐ Total Differential Head @ Rated Impeller _____ (m)
☐ Max. Differential Head @ Rated Impeller _____ (m)
☐ Minimum Continuous Flow
Thermal (m^3/h) _____ Stable (m^3/h) _____
☐ Allowable Operating Region _____ To _____ (m^3/h)
☐ Best Efficiency Point for Rated Impeller _____ (m^3/h)
☐ Suction Specific Speed _____
☐ Impeller Diameter Rated _____ Max. _____ Min. _____ (mm)
☐ Pump Rated Power _____ (bhp) ☐ Efficiency _____ (%)
☐ Maximum Power @ Rated Impeller _____ (kW)
Rotation (Viewed from Coupling End) ☐ CW ☐ CCW

Case Pressure Rating
☐ Max. Allowable Working Pressure _____ (kPa)
@ _____ (˚C)
☐ Hydrostatic Test Pressure _____ (kPa)

○ SITE CONDITIONS

Location ○ Indoor ○ Outdoor
Altitude _____ (m)
Range of Ambient Temperatures Min./Max. _____ / _____ (˚C)
Electrical Classification CL. _____ Gr. _____ Div. _____
○ Non Hazardous

○ GENERAL REMARKS

REV	DATE	REASON FOR REVISION	BY	CHECK	APPROVED
4					
3					
2					
1					
0					

Copyright ASME International
Provided by IHS under license with ASME
No reproduction or networking permitted without license from IHS
Not for Resale

PIP

FORM A2 ASME CENTRIFUGAL PUMP
Data Sheet (SI Units)

RESP73
PAGE 2 of 3
November 2000

Job Number _____ Item Number _____ Purchase Order Number _____ Date _____
Req./Spec. Number _____ / _____ Inquiry Number _____ By _____

☐ MECHANICAL DATA

Impeller Type
☐ Closed ☐ Open
☐ Semi-open ☐ Other _____

Casing Mounting
☐ Foot ☐ Centerline
☐ Vertical Inline ☐ Close-coupled

Bearings
☐ Bearings Manufacturer _____
☐ Radial Bearing Type _____ No. _____
☐ Thrust Bearing Type _____ No. _____
☐ Bearing Isolators _____
☐ Shaft Stiffness Ratio (L^3/D^4) _____

Lubrication
○ Flood ○ Pure Mist ○ Shielded (Grease)
○ Grease ○ Purge Mist ○ Sealed (Grease)
○ Constant Level Oiler Required
☐ Housing Vent Required
○ Magnetic Drain Plug in Housing Required
☐ Oil Cooler Required
○ Seal Spray Guard Required
☐ Oil Viscosity ISO Grade _____
☐ Other _____

Nozzle Connections ☐ Size ☐ Rating ☐ Facing

Suction			
Discharge			

Aux. Case Connection ○ Drain Required
☐ Size _____ (mm)
○ Threaded ○ Welded and Flanged

☐ MATERIALS

Material Class Code _____
Casing _____
Impeller _____
Cover _____
Shaft _____
Shaft Sleeve _____
Baseplate _____
Casing Gasket _____
Impeller Gasket _____
Casing Fasteners _____
Bearing Housing _____
Bearing Housing Adapter _____
Bearing Housing End Seals _____
Coupling Guard _____
Mechanical Seal Gland _____
Mechanical Seal Gland Fasteners _____

☐ DRIVER

Horsepower Rating _____ (kW) Speed _____ (rpm)
Drive HP Selected or Max. S.G. _____ & Max. Visc. _____ (cp)
Remarks _____

☐ COUPLING BETWEEN PUMP AND DRIVER

Manufacturer _____
Type _____
Size _____
Model _____
Spacer Length (mm) _____
Coupling Guard Type
☐ Manufacturer's Standard
☐ Baseplate Mounted
☐ Non-Spark Coupling Guard Required
Remarks _____

☐ BASEPLATE

Remarks ○ Grounded ○ Free Standing
☐ Centerline of Pump to Stilt Bottom _____ (mm)
○ Vertical Pump Case Support Bracket
Design ○ PIP Standard RESP002 (Data Sheet Attached)
○ Manufacturer's Standard
Remarks _____

PAINT AND SHIPMENT PREPARATION

Pump
○ Manufacturer's Standard
○ Other _____

Baseplate
○ Manufacturer's Standard
○ Other _____

Shipment
○ Domestic ○ Export ○ Export Boxing Required
○ Number of Months of Storage _____
Total Weight _____ (kg)

INSPECTION AND TESTING

○ Final Inspection Required ○ Days Notification Required _____

Test	Non-Witnessed	Witnessed	Certificate
Hydrostatic	○	○	○
Performance	○	○	○
NPSHR	○	○	○
Vibration	○	○	○
Other	○	○	○

○ Dismantle and Inspect After Test
○ Casting Repair Procedure Approval Required
Material Certification Required
○ Casing ○ Cover ○ Impeller ○ Shaft
○ Other _____
Inspection Required for Connection Welds
○ Manufacturer's Standard ○ Visual Inspection
Inspection Required for Castings
○ Manufacturer's Standard ○ Visual Inspection
○ Other _____

MANUFACTURER DOCUMENTATION REQUIREMENTS

○ For Vendor Data Requirements Refer to: _____
Remarks _____

Copyright ASME International
Provided by IHS under license with ASME
No reproduction or networking permitted without license from IHS
Not for Resale

PIP

FORM A2 ASME CENTRIFUGAL PUMP
Data Sheet (SI Units)

RESP73
PAGE 3 of 3
November 2000

Job Number _____ Item Number _____ Purchase Order Number _____ Date _____
Req./Spec. Number _____ / _____ Inquiry Number _____ By _____

☐ MECHANICAL SEAL

Supplied By ○ Pump Manufacturer ○ Purchaser
Mounted By ○ Pump Manufacturer ○ Purchaser
Seal Classification Code _____
☐ Manufacturer _____
☐ Model _____
☐ Manufacturer Code _____
Seal Type ○ Cartridge ○ Component
Seal Design ○ Single ○ Dual ○ Dry Gas
○ Pressurized ○ Unpressurized
Seal Chamber ○ Taper Bore ○ Cylindrical Bore
Seal Chamber Size ○ Oversized ○ Standard
☐ Sleeve Material _____
☐ Pumping Ring Required _____
☐ Throat Bushing Required ☐ Materials _____
Remarks _____

☐ SEAL GLAND

Taps Required ○ Quench ○ Flush ○ Drain
○ Other _____
☐ Throttle Bushing ☐ Materials

☐ SEAL FLUSHING

Primary Flush Plan No. _____
○ External Flush Liquid _____
○ Supply Temperature Min./Max. _____ / _____ (°C)
○ Specific Gravity _____
○ Specific Heat _____ (kJ/kg °C)
○ Vapor Pressure _____ (kPa abs) @ _____ (°C)
☐ Flow Rate Required Min./Max. _____ / _____ (m^3/h)
☐ Pressure Required Min./Max. _____ / _____ (kPa)
☐ Temperature Required Min./Max. _____ / _____ (°C)
Primary Seal Flush Piping
○ Tubing ○ Pipe ○ Other _____
Material ○ 316SS ○ Carbon Steel
○ Other _____
○ Piping/Tubing Size _____ (mm)
Piping Assembly ○ Threaded ○ Unions ○ Flanged
○ Tube Type Fittings ○ Socket Welded
Remarks _____

☐ BARRIER/BUFFER FLUSH SYSTEM

Barrier Flush Plan _____
○ Barrier Flush Liquid _____
○ Temperature Min./Max. _____ / _____ (°C)
○ Specific Gravity _____
○ Specific Heat _____ (kJ/kg °C)
○ Vapor Pressure _____ (kPa abs) @ _____ (°C)
☐ Pressure Required Min./Max. _____ / _____ (kPa)
☐ MAWP of Secondary Seal System _____ (kPa)
○ Temperature Required Min./Max. _____ / _____ (°C)
Secondary Seal Flush Piping ○ Tubing ○ Pipe
Material ○ 316SS ○ Carbon Steel
○ Other _____
○ Piping/Tubing Size _____ (mm)
Piping Assembly ○ Threaded ○ Unions ○ Flanged
○ Tube Type Fittings ○ Socket Welded
Remarks _____

SEAL SYSTEM INSTRUMENTATION

	Gauges	Switches
Primary Seals		
Flow	○	○
Temperature	○	○
Pressure	○	○
Secondary Seals		
Flow	○	○
Pressure	○	○
Level	○	○

Remarks _____

☐ COOLING OR HEATING PIPING PLANS

○ Piping Plan No. _____
○ Name of Fluid _____
○ Inlet Temperature _____ (°C)
○ Outlet Temperature _____ (°C)
☐ Rated Flow _____ (m^3/h)
☐ Supply Pressure _____ (kPa)
☐ Max. Allowable ΔP _____ (kPa)

○ Galvanized Pipe ○ SS Tubing
○ Sight Flow Indicator
○ Outlet Shut-Off Valve
Remarks _____

Copyright ASME International
Provided by IHS under license with ASME
No reproduction or networking permitted without license from IHS
Not for Resale

ASME Services

ASME is committed to developing and delivering technical information. At ASME's Information Central, we make every effort to answer your questions and expedite your orders. Our representatives are ready to assist you in the following areas:

ASME Press
Codes & Standards
Credit Card Orders
IMechE Publications
Meetings & Conferences
Member Dues Status
Member Services & Benefits
Other ASME Programs
Payment Inquiries
Professional Development
Short Courses
Publications
Public Information
Self-Study Courses
Shipping Information
Subscriptions/Journals/Magazines
Symposia Volumes
Technical Papers

How can you reach us? It's easier than ever!

There are four options for making inquiries* or placing orders. Simply mail, phone, fax, or E-mail us and an Information Central representative will handle your request.

Mail
ASME
22 Law Drive, Box 2900
Fairfield, New Jersey
07007-2900

Call Toll Free
US & Canada: 800-THE-ASME
(800-843-2763)
Mexico: 95-800-THE-ASME
(95-800-843-2763)
Universal: 973-882-1167

Fax-24 hours
973-882-1717
973-882-5155

E-Mail-24 hours
Infocentral @asme.org

* Information Central staff are not permitted to answer inquiries about the technical content of this code or standard. Information as to whether or not technical inquiries are issued to this code or standard is shown on the copyright page. All technical inquiries must be submitted in writing to the staff secretary. Additional procedures for inquiries may be listed within.

Copyright ASME International
Provided by IHS under license with ASME
No reproduction or networking permitted without license from IHS
Not for Resale



ISBN 0-7918-2713-5

9 780791 827130

J01901

Copyright ASME International
Provided by IHS under license with ASME
No reproduction or networking permitted without license from IHS

Not for Resale