AN AMERICAN NATIONAL STANDARD

ASME B56.8a-1994

ADDENDA

to

ASME B56.8-1993
SAFETY STANDARD FOR PERSONNEL AND BURDEN CARRIERS

THE AMERICAN SOCIETY OF MECHANICAL ENGINEERS

United Engineering Center • 345 East 47th Street • New York, N.Y. 10017

Copyright ASME International
Provided by IHS under license with ASME
No reproduction or networking permitted without license from IHS

Not for Resale

Date of Issuance: October 15, 1994

ASME is the registered trademark of The American Society of Mechanical Engineers.

This code or standard was developed under procedures accredited as meeting the criteria for American National Standards. The Consensus Committee that approved the code or standard was balanced to assure that individuals from competent and concerned interests have had an opportunity to participate. The proposed code or standard was made available for public review and comment which provides an opportunity for additional public input from industry, academia, regulatory agencies, and the public-at-large.

ASME does not "approve," "rate," or "endorse" any item, construction, proprietary device, or activity.

ASME does not take any position with respect to the validity of any patent rights asserted in connection with any items mentioned in this document, and does not undertake to insure anyone utilizing a standard against liability for infringement of any applicable Letters Patent, nor assume any such liability. Users of a code or standard are expressly advised that determination of the validity of any such patent rights, and the risk of infringement of such rights, is entirely their own responsibility.

Participation by federal agency representative(s) or person(s) affiliated with industry is not to be interpreted as government or industry endorsement of this code or standard.

ASME accepts responsibility for only those interpretations issued in accordance with governing ASME procedures and policies which preclude the issuance of interpretations by individual volunteers.

No part of this document may be reproduced in any form,
in an electronic retrieval system or otherwise,
without the prior written permission of the publisher.

Copyright © 1994 by
THE AMERICAN SOCIETY OF MECHANICAL ENGINEERS
All Rights Reserved
Printed in U.S.A.

Copyright ASME International
Provided by IHS under license with ASME
No reproduction or networking permitted without license from IHS

Not for Resale

ASME B56.8a-1994

Following approval by the ASME B56 Committee and ASME, and after public review, ASME B56.8a-1994 was approved by the American National Standards Institute on August 19, 1994.

Addenda to the 1993 edition of ASME B56.8 are issued in the form of replacement pages. Revisions, additions, and deletions are incorporated directly into the affected pages. It is advisable, however, that this page, the Addenda title and copyright pages, and all replaced pages be retained for reference.

SUMMARY OF CHANGES

This is the first Addenda to be published to ASME B56.8-1993.

Replace or insert the pages listed. Changes given below are identified on the pages by a margin note, **(a)**, placed next to the affected area. The pages not listed are the reverse sides of the listed pages and contain no changes.

Page	*Location*	*Change*
i	Designator	Corrected by Errata
7	6.2.1	First paragraph revised
	6.2.1(p)	Revised
8	7.2.1(d)	Revised
9, 9.1	7.3.9(a)(5)	Revised in its entirety
17	Appendix B	(1) Parenthetical statement revised (2) Definition of *carrier, personnel and burden* editorially revised (3) Definition of *manufacturer* added (4) Definition of *truck, powered industrial* editorially revised

Copyright ASME International
Provided by IHS under license with ASME
No reproduction or networking permitted without license from IHS
Not for Resale

AN AMERICAN NATIONAL STANDARD

POWERED AND NONPOWERED INDUSTRIAL TRUCKS

Safety Standard for Personnel and Burden Carriers

ASME B56.8-1993 (a)

(REVISION OF ASME/ANSI B56.8-1988)

The American Society of Mechanical Engineers

345 East 47th Street, New York, N.Y. 10017

Copyright ASME International
Provided by IHS under license with ASME
No reproduction or networking permitted without license from IHS

Not for Resale

Date of Issuance: November 15, 1993

The 1993 edition of this Standard is being issued with an automatic addenda subscription service. The use of an addenda allows revisions made in response to public review comments or committee actions to be published on a regular yearly basis; revisions published in addenda will become effective 1 year after the Date of Issuance of the addenda. The next edition of this Standard is scheduled for publication in 1998.

ASME issues written replies to inquiries concerning interpretations of technical aspects of this Standard. The interpretations will be included with the above addenda service. Interpretations are not part of the addenda to the Standard.

ASME is the registered trademark of The American Society of Mechanical Engineers.

This code or standard was developed under procedures accredited as meeting the criteria for American National Standards. The Consensus Committee that approved the code or standard was balanced to assure that individuals from competent and concerned interests have had an opportunity to participate. The proposed code or standard was made available for public review and comment which provides an opportunity for additional public input from industry, academia, regulatory agencies, and the public-at-large.

ASME does not "approve," "rate," or "endorse" any item, construction, proprietary device, or activity.

ASME does not take any position with respect to the validity of any patent rights asserted in connection with any items mentioned in this document, and does not undertake to insure anyone utilizing a standard against liability for infringement of any applicable Letters Patent, nor assume any such liability. Users of a code or standard are expressly advised that determination of the validity of any such patent rights, and the risk of infringement of such rights, is entirely their own responsibility.

Participation by federal agency representative(s) or person(s) affiliated with industry is not to be interpreted as government or industry endorsement of this code or standard.

ASME accepts responsibility for only those interpretations issued in accordance with governing ASME procedures and policies which preclude the issuance of interpretations by individual volunteers.

No part of this document may be reproduced in any form,
in an electronic retrieval system or otherwise,
without the prior written permission of the publisher.

Copyright © 1993 by
THE AMERICAN SOCIETY OF MECHANICAL ENGINEERS
All Rights Reserved
Printed in U.S.A.

Copyright ASME International
Provided by IHS under license with ASME
No reproduction or networking permitted without license from IHS

Not for Resale

ASME B56.8A 94 ■ 0759670 0543620 17T ■

6 MAINTENANCE PRACTICES

6.1 Introduction

6.1.1 Carriers may become hazardous if maintenance is neglected. Therefore, maintenance facilities, trained personnel, and procedures shall be provided. Such facilities may be on or off the premises.

6.2 Maintenance Procedures

(a) **6.2.1** Maintenance and inspection of all carriers shall be performed in conformance with the following practices and should follow the manufacturer's recommendations.

(*a*) A scheduled preventive maintenance, lubrication, and inspection system shall be followed.

(*b*) Only qualified and authorized personnel shall be permitted to maintain, repair, adjust, and inspect carriers.

(*c*) Before undertaking maintenance or repair, follow the manufacturer's recommendations for immobilizing the carrier.

(*d*) Block chassis before working underneath it.

(*e*) Before disconnecting any part of the engine fuel system of a gasoline or diesel powered carrier with gravity feed fuel systems, be sure shutoff valve is closed, and run engine until fuel system is depleted and engine stops running.

(*f*) Before disconnecting any part of the engine fuel system of LP gas powered carriers, close the LP gas cylinder valve and run the engine until fuel in the system is depleted and the engine stops running.

(*g*) Operation to check performance of the carrier shall be conducted in an authorized area where safe clearance exists.

(*h*) Before commencing operation of the carrier, follow the manufacturer's instructions and recommended procedures.

(*i*) Avoid fire hazards and have fire protection equipment present in the work area. Do not use an open flame to check level or leakage of fuel, battery electrolyte, or coolant. Do not use open pans of fuel or flammable cleaning fluids for cleaning parts.

(*j*) Properly ventilate the work area.

(*k*) Handle LP gas cylinders with care. Physical damage, such as dents, scrapes, or gouges, may dangerously weaken the tank and make it unsafe for use.

(*l*) Brakes, steering mechanisms, speed and directional control mechanisms, warning devices, lights, governors, guards, and safety devices shall be inspected regularly and maintained in a safe operating condition.

(*m*) Special carriers or devices designed and approved for hazardous area operation shall be inspected to ensure that maintenance preserves the original approved safe operating features.

(*n*) Fuel systems shall be checked for leaks and condition of parts. If a leak is found, action shall be taken to prevent the use of the carrier until the leak has been eliminated.

(*o*) The carrier manufacturer's capacity, operation, and maintenance instruction plates, tags, or decals shall be maintained in legible condition.

(*p*) Batteries, motors, speed and directional controllers, limit switches, protective devices, electrical conductors, and connections shall be inspected and maintained. (a)

(*q*) Carriers shall be kept in a clean condition to minimize fire hazards and facilitate detection of loose or defective parts.

(*r*) Modifications and additions which affect capacity and safe machine operation shall not be performed by the customer or user without manufacturer's prior written authorization; where authorized modifications have been made, the user shall ensure that capacity, operation, warning, and maintenance instruction plates, tags, or decals are changed accordingly.

(*s*) Care shall be taken to ensure that all replacement parts are interchangeable with the original parts and of a quality at least equal to that provided in the original equipment.

PART III
FOR THE MANUFACTURER

7 DESIGN AND CONSTRUCTION STANDARDS

7.1 Introduction

7.1.1 Part III sets forth safety standards for carriers at the time of manufacture.

7.2 Nameplates, Markings, and Instructions

7.2.1 On every carrier, the manufacturer shall install a durable, corrosion resistant nameplate, legibly inscribed with the following information:

(*a*) carrier model or serial number, or both. The serial number shall also be stamped on the main frame of the carrier;

(*b*) approximate operating weight of the carrier in pounds (lb) or kilograms (kg), or both;

(*c*) designation of compliance with the mandatory requirements of Part III of this Standard;

Copyright ASME International
Provided by IHS under license with ASME
No reproduction or networking permitted without license from IHS
Not for Resale

ASME B56.8A 94 ■ 0759670 0543621 006 ■

(a) (*d*) type designation if in conformance with ANSI/NFPA 505 and either ANSI/UL 583 or ANSI/UL 558;

(*e*) the rated capacity.

7.2.2 Where applicable, marking authorized by the appropriate nationally recognized testing laboratory shall be installed on approved carriers.

7.2.3 On battery-electric carriers, the nameplate shall also show:

(*a*) carrier weight without battery (batteries);

(*b*) the maximum service weights of the battery (batteries) and tray to be used, and

(*c*) normal voltage for which the carrier is designed.

7.2.4 For batteries in a lift-out tray with total combined service weight of batteries and tray exceeding 100 lb (45 kg), the maximum combined weight of the batteries and tray shall be legibly stamped on the battery tray near the lifting means with the following information:

SERVICE WEIGHT
_____ LB
_____ KG

7.2.5 Each carrier shall be supplied with an owner's manual furnished by the manufacturer. This manual shall contain instructions for setup, assembly, safe and proper operation, maintenance, adjustment, and service.

7.3 General Requirements

7.3.1 Every carrier shall be equipped with a horn, whistle, gong, or other sound producing device(s) that can be made to function easily by the operator when needed.

7.3.2 Guards or other means shall be provided to protect the operator, in the normal operating position, from particles thrown by the tires or wheels.

7.3.3 The operator, in the normal operating position, shall be protected from moving parts of the carrier that represent a hazard to that operator.

7.3.4 Sit down rider carriers shall be provided with seat(s) with hip restraints.

7.3.5 Foot space in accordance with the 95th percentile man, as per the National Aeronautics and Space Administration (NASA) publication, "Anthropometric Sourcebook, Vol. 1, Anthropometry for Designers," shall be provided for all passengers and shall be within the plan view outline of the carrier.

7.3.6 Handholds shall be provided for the operator and each passenger. A steering wheel or two-hand tiller shall be considered a handhold for the operator. A handhold shall be provided for each additional intended passenger and placed in such a manner that when grasping the handhold, the occupant's hands will be within the plan view outline of the carrier.

7.3.7 Steering

(*a*) Carriers employing a handwheel or a horizontal lever (horizontal motion) or a tiller bar for steering control shall have such controls designed so the carrier will respond as follows when moving in a forward direction: movement of the steering control in a clockwise direction shall steer the carrier to the operator's right.

(*b*) All steering controls shall be confined within the plan view outline of the carrier or provided with guards that protect against injury to the operator during movement of the controls, and while passing obstacles, walls, columns, etc.

7.3.8 Travel Controls

(*a*) Travel controls shall be so arranged that the carrier will not operate unless control(s) has been actuated for both direction and speed.

(*b*) Accelerator, if foot operated, shall increase speed when depressing the pedal downward or forward.

(*c*) Service brakes, if foot operated, shall be energized by depressing the pedal downward or forward.

(*d*) If a single foot pedal controls both acceleration and braking, depressing the pedal shall increase speed and releasing the pedal shall apply brakes.

(*e*) A manually operated device shall be provided to disconnect all travel control circuits.

(*f*) If both forward and reverse directions are provided, direction control shall clearly and durably identify forward and reverse directions.

(*g*) A parking brake shall be provided.

(*h*) Control pedals and control platforms that are stood on or engaged by the operator's feet shall have skid resistant surfaces.

7.3.9 Stability Tests

(*a*) *General Test Conditions and Requirements*

(*1*) A test platform shall be used that is rigid, flat, and constructed to be an adjustable slope, single plane (tilt table) with a surface finish adequate to prevent sliding of the tires. The table surface shall be large enough to support all wheels of the carrier to be tested.

(*2*) Tire inflation on all wheels shall be in accordance with the carrier manufacturer's specifications or recommendations.

(*3*) Prior to the addition of test loads, the carrier to be tested shall be readied to reflect its operating weight

Copyright ASME International
Provided by IHS under license with ASME
No reproduction or networking permitted without license from IHS
Not for Resale

and shall include all accessory items which, when installed, will decrease the stability of the carrier.

(4) The manufacturer's specified maximum material load shall be designated as the test load, placed on the load bed of the carrier, and secured thereto such that its center of gravity is directly above the geometric center of the load bed. The height of the center of gravity of the test load above the load bed shall be determined by Fig. 1.

(a) To obtain the proper height of the center of gravity for the test load from Fig. 1, first calculate the bed area of the carrier. With this result, enter the table at the bottom, read vertically upward to the line identified as the payload which represents the manufacturer's specified maximum material load or interpolate between the lines to get an intermediate point, and then read to the left margin for center of gravity height.

(b) On special purpose carriers designed for unusual loadings, the maximum load height above the bed shall be specified on the nameplate. This carrier shall be tested with a test load having a center of gravity located at a point above the carrier load bed that is one-half of the maximum specified load height.

(a) (5) The operator or passenger load shall be positioned and secured as follows.

(a) For sit-down carriers, a 200 lb (90 kg) weight shall be secured to each seat, representing the operator and each passenger as specified. If seats are adjustable, they shall be adjusted to that position representing the least stable condition in each test. The center of gravity of the weight(s) is to be 6 in. (152 mm) above the lowest point of the operator supporting surface and 10 in. (254 mm) forward of the seat back. If a seat back is not used, then 10 in. (254 mm) will be measured from the position of the back of an actual operator when seated normally on the unit.

(b) For stand-up carriers, a 200 lb (90 kg) weight shall be secured at the geometric center of the operator platform representing the operator. The center of gravity of the weight is to be 40 in. (1016 mm) above the operator platform.

(6) *Calculated Stability Factors.* In order to provide a means for handling everyday stability determinations, stability factors as related to the tilting platform tests may be calculated. These calculations will usually vary for each manufacturer's product and normally take into account variations in design, including tires and other deflections, and provide a means for predicting with reasonable accuracy the stability of carriers. Tilting platform tests are the basis for establishing factors used in stability calculations. When comparing calculations with actual tilting platform tests, the actual test results are to be considered the true measure of stability.

(b) *Lateral Stability Test*

(1) *Requirements*

(a) The position of the carrier on the test platform shall be maintained by parking brakes or similar means, but not by use of wheel chocks.

(b) Stability determination and measurements shall be taken under static conditions.

(2) *Procedure.* The carrier with test load in place shall be put on the tilt platform in accordance with Figs. 3, 4, or 5 (depending on type and number of supporting wheels).

(a) Four-wheel carriers shall be positioned such that a line from the center of contact of a nonsteer wheel (or outermost wheel where multiple wheels are used) to the center of contact of the steer wheel nearest the tilting platform axis is parallel to the tilting axis of the platform.

(b) Three-wheel carriers shall be positioned such that a line from the center contact of a nonsteer wheel (or outermost wheel where multiple wheels are used) to the point of contact of the steer wheel is parallel to the tilting axis of the platform. On three-wheel carriers with dual steer wheels, the line described above shall be drawn to the point of contact of the one steer wheel nearest the tilting platform axis.

(c) The steer wheel(s) on both three- and four-wheel carriers shall be turned to be parallel to the tilting platform axis.

(d) The stability of the carrier shall be determined directly by tilting the platform upon which the carrier is placed to the gradient specified in Fig. 2.

(e) To obtain the proper gradient from Fig. 2 to conduct this test, read vertically upward from the value of maximum speed with test load to the reference line above, and then horizontally to the left margin.

(f) Tilt platform back to level.

(g) Recheck the position of all loads to ensure that they still conform to the test requirements.

(h) Recheck the tire inflation of all tires to ensure that they still conform to the test requirements.

(3) The test is to be conducted with one side of the carrier facing the tilt axis and repeated with the other side facing the tilt axis.

(4) Repeat all tests without payload and passenger load, using operator's simulated weight only.

(5) *Test Acceptance.* If the carrier did not overturn when tested in accordance with the above requirements, it meets the test requirements.

(c) *Longitudinal Stability Tests*

(1) *Requirements*

(a) The position of the carrier on the test platform shall be maintained by parking brakes or similar means, but not by use of wheel chocks.

Copyright ASME International
Provided by IHS under license with ASME
No reproduction or networking permitted without license from IHS
Not for Resale

ASME B56.8A 94 ■ 0759670 0543623 989 ■

(*b*) Stability determination and measurements shall be taken under static conditions.

(*2*) *Downgrade Test*

(*a*) *Procedure.* The loaded carrier shall be placed on the tilting platform such that the longitudinal center line is perpendicular to the platform axis of tilt (see Fig. 6). The forward end of the carrier will be fac-

Copyright ASME International
Provided by IHS under license with ASME
No reproduction or networking permitted without license from IHS
Not for Resale

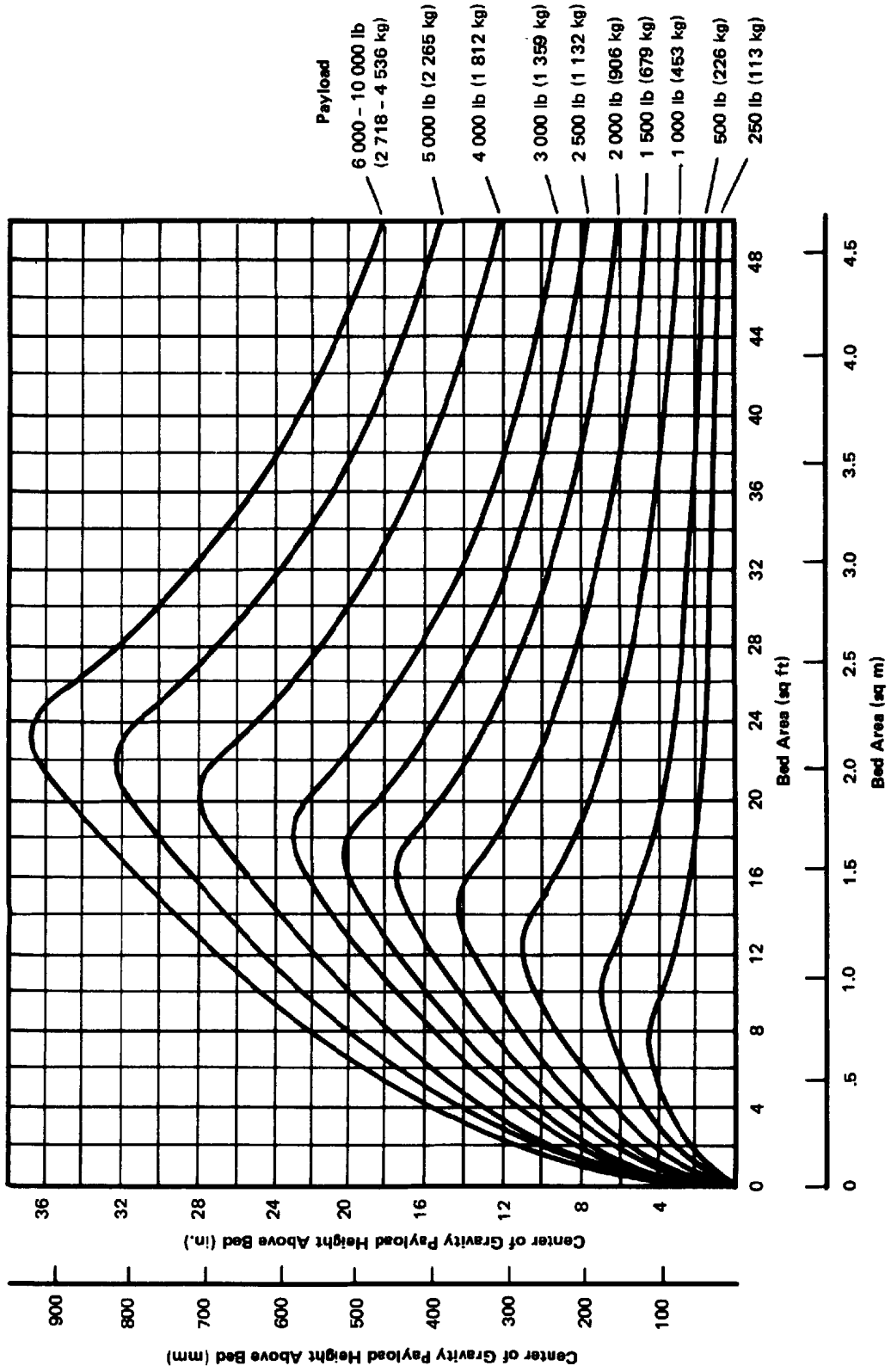

FIG. 1 CENTER OF GRAVITY PAYLOAD HEIGHT ABOVE BED

Not for Resale

Copyright ASME International
Provided by IHS under license with ASME
No reproduction or networking permitted without license from IHS

APPENDIX B
GLOSSARY OF COMMONLY USED WORDS AND PHRASES[1]

(a) (This Appendix is an integral part of ASME B56.8-1993 and is placed after the main text for convenience.)

accelerator — a device that controls the speed of a carrier

(93) *approved* — the word *approved* means the classification or listing as to fire, explosion, and electric shock hazard by a nationally recognized testing laboratory, i.e., a laboratory qualified and equipped to conduct examinations and tests such as those prescribed by Underwriters Laboratories, Inc., and Factory Mutual Research Corp.

(93) *battery-electric personnel and burden carrier* — see *carrier, battery-electric personnel and burden*

(93) *brake, parking* — a device(s) to prevent inadvertent movement of the stationary vehicle

(93) *brake, service* — a device designed to bring a moving carrier to a stop

(93) *carrier, battery-electric personnel and burden* — an electric carrier in which the power source is a storage battery

(93) *carrier, electric personnel and burden* — a carrier in which the principal energy is transmitted from power sources to motor(s) in the form of electricity

(93) (a) *carrier, personnel and burden* — a mobile, power-driven machine which is not self-loading, used for transporting material and/or personnel on indoor and outdoor improved surfaces, but not for use on public highways

center of gravity (of test load) — that point at which the load mass is concentrated. It is located horizontally in the center of the load bearing surface, and vertically by its distance above the load bearing surface.

manufacturer — the person(s) who or organization(s) that develop(s) raw material(s) and (sub)assemblies into the end product(s) (a)

material load — weight of material to be carried, excluding personnel

operating weight — weight of carrier with full fuel load, without material load or personnel load

operator — a trained and authorized person who controls any function(s) of a carrier (93)

operator platform — see *platform, operator* (93)

parking brake — see *brake, parking* (93)

personnel and burden carrier — see *carrier, personnel and burden* (93)

personnel and burden carrier, electric — see *carrier, electric personnel and burden* (93)

platform, operator — a platform or area from which a standing person controls the functions of a carrier or other material handling device (93)

powered industrial truck — see *truck, powered industrial* (93)

rated capacity — the total weight of material load and personnel load for a carrier. The total personnel load for personnel carriers.

service brake — see *brake, service* (93)

travel controls — devices that control the speed, braking, forward and reverse direction of the carrier (93)

truck, powered industrial — a mobile, power-propelled truck used to carry, push, pull, lift, stack, or tier material (93) (a)

user — the person(s) or organization(s) responsible for the operation and maintenance of a carrier. This would normally be the owner, lessee, employer, or operator.

[1] For additional terms, see latest edition of ANSI Z94.0, Industrial Engineering Terminology.

Copyright ASME International
Provided by IHS under license with ASME
No reproduction or networking permitted without license from IHS Not for Resale

STD.ASME B56.8-ENGL 1993 ■ 0759670 0619932 232 ■

ASME B56.8-1993

(REVISION OF ASME/ANSI B56.8-1988)

POWERED AND NONPOWERED INDUSTRIAL TRUCKS

REAFFIRMED 2000

FOR CURRENT COMMITTEE PERSONNEL
PLEASE SEE ASME MANUAL AS-11

Safety Standard for Personnel and Burden Carriers

AN AMERICAN NATIONAL STANDARD

The American Society of Mechanical Engineers

Copyright ASME International
Provided by IHS under license with ASME
No reproduction or networking permitted without license from IHS
Not for Resale

STD.ASME B56.8-ENGL 1993 ■ 0759670 0619933 179 ■

AN AMERICAN NATIONAL STANDARD

POWERED AND NONPOWERED INDUSTRIAL TRUCKS

Safety Standard for Personnel and Burden Carriers

ASME/ANSI B56.8-1993

(REVISION OF ASME/ANSI B56.8-1988)

The American Society of Mechanical Engineers

345 East 47th Street, New York, N.Y. 10017

Copyright ASME International
Provided by IHS under license with ASME
No reproduction or networking permitted without license from IHS

Not for Resale

Date of Issuance: November 15, 1993

The 1993 edition of this Standard is being issued with an automatic addenda subscription service. The use of an addenda allows revisions made in response to public review comments or committee actions to be published on a regular yearly basis; revisions published in addenda will become effective 1 year after the Date of Issuance of the addenda. The next edition of this Standard is scheduled for publication in 1998.

ASME issues written replies to inquiries concerning interpretations of technical aspects of this Standard. The interpretations will be included with the above addenda service. Interpretations are not part of the addenda to the Standard.

ASME is the registered trademark of The American Society of Mechanical Engineers.

This code or standard was developed under procedures accredited as meeting the criteria for American National Standards. The Consensus Committee that approved the code or standard was balanced to assure that individuals from competent and concerned interests have had an opportunity to participate. The proposed code or standard was made available for public review and comment which provides an opportunity for additional public input from industry, academia, regulatory agencies, and the public-at-large.

ASME does not "approve," "rate," or "endorse" any item, construction, proprietary device, or activity.

ASME does not take any position with respect to the validity of any patent rights asserted in connection with any items mentioned in this document, and does not undertake to insure anyone utilizing a standard against liability for infringement of any applicable Letters Patent, nor assume any such liability. Users of a code or standard are expressly advised that determination of the validity of any such patent rights, and the risk of infringement of such rights, is entirely their own responsibility.

Participation by federal agency representative(s) or person(s) affiliated with industry is not to be interpreted as government or industry endorsement of this code or standard.

ASME accepts responsibility for only those interpretations issued in accordance with governing ASME procedures and policies which preclude the issuance of interpretations by individual volunteers.

No part of this document may be reproduced in any form,
in an electronic retrieval system or otherwise,
without the prior written permission of the publisher.

Copyright © 1993 by
THE AMERICAN SOCIETY OF MECHANICAL ENGINEERS
All Rights Reserved
Printed in U.S.A.

Copyright ASME International
Provided by IHS under license with ASME
No reproduction or networking permitted without license from IHS

Not for Resale

FOREWORD (93)

(This Foreword is not part of ASME B56.8-1993.)

On November 23, 1976, the B56.8 Subcommittee started work on this Standard at the direction of the B56 Committee and the sponsor, the American Society of Mechanical Engineers (ASME). Following a number of work sessions and ballots within the Subcommittee and the B56 Standards Committee, it was submitted to ASME for B56 Committee ballot, public review, and Secretariat approval. After obtaining such approval, the Standard was submitted to the American National Standards Institute, Inc. (ANSI). The first edition of this Standard was approved by ANSI on February 17, 1981.

In accordance with its procedures, the B56.8 Subcommittee began work on a revision in June 1986. After approval by the B56 Committee and the sponsor, and after public review, this Standard was approved by ANSI and designated as an American National Standard on May 17, 1988.

In February 1993, the Subcommittee met to consider revisions to the 1988 Edition. After approval by the B56 Committee and the sponsor, and after public review, a revision of the 1988 Edition was approved by ANSI and designated as an American National Standard on August 30, 1993.

This Standard shall become effective one year after the date of issuance. Part III applies only to carriers manufactured after the effective date.

Safety codes and standards are intended to enhance public health and safety. Revisions result from committee consideration of factors such as technological advances, new data, and changing environmental and industry needs. Revisions do not imply that previous editions were inadequate.

Copyright ASME International
Provided by IHS under license with ASME
No reproduction or networking permitted without license from IHS
Not for Resale

ASME STANDARDS COMMITTEE B56
Powered and Nonpowered Industrial Trucks

(The following is the roster of the Committee at the time of approval of this Standard.)

OFFICERS

J. D. Schell, *Chairman*
R. G. Lang, *Vice Chairman*
W. Berger, *Secretary*

COMMITTEE PERSONNEL*

AMERICAN TRUCKING ASSOCIATIONS, INC.
N. Darmstadter, American Trucking Associations, Inc.
J. M. Dandrea, *Alternate*, American Trucking Associations, Inc.

BATTERY COUNCIL INTERNATIONAL
W. N. Ritchie, East Penn Manufacturing Co., Inc.
K. S. Sanders, *Alternate*, East Penn Manufacturing Co., Inc.

INDUSTRIAL TRUCK ASSOCIATION, THE
W. J. Montwieler, The Industrial Truck Association

INTERNATIONAL ASSOCIATION OF MACHINISTS AND AEROSPACE WORKERS
E. W. Sprang, *Alternate*, International Association of Machinists and Aerospace Workers

MOTOR VEHICLE MANUFACTURERS ASSOCIATION
E. E. Meyer, Ford Motor Co.

U.S. DEPARTMENT OF THE ARMY
N. Fertman, Belvoir RD&E Center

INDIVIDUAL MEMBERS
L. J. Churches, Churches & Associates, Inc.
R. C. Fuller
G. L. Gaulke, Hyster Co.
J. E. Johnson, *Alternate*, Hyster Co.
L. Gould, Modern Materials Handling Magazine
E. B. Gutta
D. E. Hupp, Aluminum Company of America
D. T. LaBelle
R. G. Lang
A. C. Karelus, *Alternate*, Eastman Kodak Co.
R. R. Lasecki
E. J. Ramsey, The Major Equipment Co., Inc.
G. H. Ritterbusch, Caterpillar Tractor Co.
R. N. Rogers, The Raymond Corp.
J. D. Schell

* The members listed, except for those listed under the heading for individual members, were nominated by their respective organizations.

Copyright ASME International
Provided by IHS under license with ASME
No reproduction or networking permitted without license from IHS
Not for Resale

INDIVIDUAL MEMBERS (CONT'D)

E. R. Sirotak
F. Steinberger, General Motors Corp.

SUBCOMMITTEE B56.8 — SAFETY STANDARD FOR PERSONNEL AND BURDEN CARRIERS

R. J. DePierre, *Chairman,* Taylor-Dunn
W. Berger, *Secretary*
B. E. Brooks, International Union — United Auto Workers
J. M. Garcia, Mars Cars
M. B. Jaques, Ransomers America, Inc.
S. Benesch, *Alternate,* Cushman, Inc.
O. M. Julien, Columbia ParCar
J. A. Lang, E-Z-GO
D. G. Samuelson, Club Car, Inc.
E. W. Sprang, International Association of Machinists and Aerospace Workers
G. W. Meyer, *Alternate,* International Association of Machinists and Aerospace Workers

Copyright ASME International
Provided by IHS under license with ASME
No reproduction or networking permitted without license from IHS
Not for Resale

ASME B56.8-1993
SUMMARY OF CHANGES

The 1993 Edition of ASME B56.8 includes the following changes, identified by **(93)**:

Page	*Location*	*Change*
iii	Foreword	Revised
1, 2	General	Revised in its entirety
4	4.7.1	Revised
16	Appendix A	(1) Following references revised: ANSI/NFPA 30 ANSI/NFPA 58 ANSI/NFPA 505 ANSI/Z94.0 (2) Address of ANSI revised
17	Appendix B	Revised in its entirety

SPECIAL NOTE

The Interpretations to ASME B56.8 issued since the publication of the 1988 Edition are included at the end of this Edition as a separate section for the user's convenience. The Interpretations, however, are not part of this Edition or of the Standard itself.

Copyright ASME International
Provided by IHS under license with ASME
No reproduction or networking permitted without license from IHS
Not for Resale

CONTENTS

Foreword iii
Standards Committee Roster v
Summary of Changes vii
General 1

Part I Introduction

1 Scope 3
2 Purpose and Effective Date 3
3 Interpretation 3

Part II For the User

4 General Safety Practices 4
5 Operating Safety Rules and Practices 5
6 Maintenance Practices 7

Part III For the Manufacturer

7 Design and Construction Standards 7

Figures

1 Center of Gravity Payload Height Above Bed 10
2 Platform Gradient Angle for Lateral Stability 11
3 Carrier Placement on Lateral Tilting Platform (Four-Wheel) 12
4 Carrier Placement on Lateral Tilting Platform (Three-Wheel) 13
5 Carrier Placement on Lateral Tilting Platform (Four-Wheel, Dual Front Axle) 14
6 Carrier Placement on Longitudinal Platform (Downgrade Position Indicated) 15

APPENDICES

A References 16
B Glossary of Commonly Used Words and Phrases 17

Copyright ASME International
Provided by IHS under license with ASME
No reproduction or networking permitted without license from IHS
Not for Resale

POWERED AND NONPOWERED INDUSTRIAL TRUCKS

(93) GENERAL

This Standard is one of a series that has been formulated with the American Society of Mechanical Engineers as Sponsor in accordance with the Accredited Organization method, the procedures accredited by the American National Standards Institute, Inc., and the following scope.

> Establishment of the safety requirements relating to the elements of design, operation, and maintenance; standardization relating to principal dimensions to facilitate interchangeability, test methods, and test procedures of powered and nonpowered industrial trucks (not including vehicles intended primarily for earth moving or over-the-road hauling); and maintenance of liaison with the International Organization for Standardization (ISO) in all matters pertaining to powered and nonpowered industrial trucks.

One purpose of the Standard is to serve as a guide to governmental authorities having jurisdiction over subjects within the scope of the Standard. It is expected, however, that the Standard will find a major application in industry, serving as a guide to manufacturers, purchasers, and users of the equipment.

For convenience, Standards for Powered and Nonpowered Industrial Trucks have been divided into separate volumes:

Safety Standards

B56.1	Low Lift and High Lift Trucks
B56.5	Guided Industrial Vehicles and Automated Functions of Manned Industrial Vehicles
B56.6	Rough Terrain Forklift Trucks
B56.7	Industrial Crane Trucks
B56.8	Personnel and Burden Carriers
B56.9	Operator Controlled Industrial Tow Tractors
B56.10	Manually Propelled High Lift Industrial Trucks

Standardization Standards

B56.11.1	Double Race or Bi-Level Swivel and Rigid Industrial Casters
B56.11.3	Load Handling Symbols for Powered Industrial Trucks
B56.11.4	Hook-Type Forks and Fork Carriers for Powered Industrial Forklift Trucks
B56.11.5	Measurement of Sound Emitted by Low Lift, High Lift, and Rough Terrain Powered Industrial Trucks
B56.11.6	Evaluation of Visibility From Powered Industrial Trucks

Safety standards that were previously listed as B56 volumes but now have different identification due to a change in standards development assignments are as follows.

NFPA 505	Fire Safety Standard for Powered Industrial Trucks — Type Designations, Areas of Use, Maintenance and Operation (formerly B56.2)
UL 583	Standard for Safety for Electric-Battery-Powered Industrial Trucks (formerly B56.3)
UL 558	Standard for Safety for Internal Combustion Engine-Powered Industrial Trucks (formerly B56.4)

If adopted for governmental use, the references to other national standards in the specific volumes may be changed to refer to the corresponding governmental regulations.

The use of powered and nonpowered industrial trucks is subject to certain hazards that cannot be completely eliminated by mechanical means, but the risks can be minimized by the exercise of intelligence, care, and common sense. It is therefore essential to have competent and careful operators, physically and mentally fit, and thoroughly trained in the safe operation of the equipment and the handling of the loads. Serious hazards are overloading, instability of the load, obstruction to the free passage of the load, collision with objects or pedestrians, poor maintenance, and use of equipment for a purpose for which it was not intended or designed.

Copyright ASME International
Provided by IHS under license with ASME
No reproduction or networking permitted without license from IHS
Not for Resale

Suggestions for improvement of these Standards, especially those based on actual experience in their application, shall be submitted to the Secretary of the B56 Committee, ASME, United Engineering Center, 345 East 47th Street, New York, NY 10017.

Comments shall be written in accordance with the following format:

(*a*) specify paragraph designation of the pertinent volume;

(*b*) indicate suggested change (addition, deletion, revision, etc.);

(*c*) briefly state reason and/or evidence for suggested change;

(*d*) submit suggested changes to more than one paragraph in the order in which they appear in the volume.

The appropriate B56 Subcommittee will consider each suggested revision at its first meeting after receipt of the suggested revision(s).

Copyright ASME International
Provided by IHS under license with ASME
No reproduction or networking permitted without license from IHS
Not for Resale

SAFETY STANDARD FOR PERSONNEL AND BURDEN CARRIERS

PART I
INTRODUCTION

1 SCOPE

This Standard defines safety requirements relating to the elements of design, operation, and maintenance of powered personnel and burden carriers having three or more wheels, a maximum speed not exceeding 35 mph (56 km/h), and a load capacity not exceeding 10,000 lb (4536 kg). This Standard does not include vehicles intended primarily for earth moving or over-the-road hauling, or unmanned automatic guided vehicles.

2 PURPOSE AND EFFECTIVE DATE

The purpose of this Standard is to promote safety in the application, operation, and maintenance of personnel and burden carriers.

This Standard may be used as a guide by governmental authorities desiring to formulate safety rules and regulations. This Standard is also intended for voluntary use by others associated with manufacturing or utilizing personnel and burden carriers.

This Standard shall become effective 1 year after date of issuance. Part III applies only to personnel and burden carriers manufactured after the effective date.

3 INTERPRETATION

3.1 Mandatory and Advisory Rules

To carry out the provisions of this Standard, the word *shall* is to be understood as mandatory and the word *should* as recommended.

3.2 Terms

For purposes of this Standard, the term *carrier* shall mean *personnel and burden carrier.*

3.3 Requests for Interpretation

The B56 Committee will render an interpretation of any requirement of this Standard. Interpretations will be rendered only in response to a written request sent to the Secretary of the B56 Committee, ASME, 345 East 47th Street, New York, New York 10017. The request for interpretation shall be in the following format.

Subject: Cite the applicable paragraph number(s) and provide a concise description.

Edition: Cite the applicable edition of the pertinent standard for which the interpretation is being requested.

Question: Phrase the question as a request for an interpretation of a specific requirement suitable for general understanding and use, not as a request for approval of a proprietary design or situation. The inquirer may also include any plans or drawings which are necessary to explain the question; however, they should not contain proprietary names or information.

ASME procedures provide for reconsideration of any interpretation when or if additional information which might affect an interpretation is available. Further, persons aggrieved by an interpretation may appeal to the cognizant ASME Committee or Subcommittee. ASME does not "approve," "certify," "rate," or "endorse" any item, construction, proprietary device, or activity.

3.4 Metric Conversions

The values stated in U.S. customary units are to be regarded as the standard.

Copyright ASME International
Provided by IHS under license with ASME
No reproduction or networking permitted without license from IHS
Not for Resale

STD·ASME B56·8-ENGL 1993 ■ 0759670 0619943 018 ■

PART II
FOR THE USER

4 GENERAL SAFETY PRACTICES

4.1 Introduction

4.1.1 Like other machines, carriers can cause injury if improperly used or maintained. Part II contains broad safety practices applicable to carrier operations. Before operation, the user shall establish such additional specific safety practices as may reasonably be required for safe operation.

4.2 Stability

4.2.1 Experience has shown that carriers which comply with the provisions stated in para. 7.3.9 are stable when properly operated and when operated in accordance with specific safety rules and practices established to meet actual operating terrain and conditions. However, improper operation, faulty maintenance, or poor housekeeping may contribute to a condition of instability and defeat the purpose of the standard. Some of the conditions which may affect stability are failure of the user to follow safety practices; also, ground and floor conditions, grade, speed, loading, the operation of the carrier with improper loads, battery weight, dynamic and static forces, and the judgment exercised by the carrier operator.

(*a*) The user shall train carrier operators to adhere strictly to the operating instructions stated in this Standard.

(*b*) The user shall survey specific operating conditions and environment, and establish and train carrier operators to comply with additional, specific safety practices.

4.3 Nameplates, Markings, Capacity, and Modifications

4.3.1 The user shall maintain in a legible condition all nameplates, warnings, and instructions which are supplied by the manufacturer.

4.3.2 The user shall not perform any modification or addition which affects capacity or safe operation, or make any change not in accordance with the owner's manual without the manufacturer's prior written authorization. Where authorized modifications have been made, the user shall ensure that capacity, operation, warning, and maintenance instruction plates, tags, or decals are changed accordingly.

4.3.3 As required under paras. 4.3.1 or 4.3.2, the manufacturer shall be contacted to secure new nameplates, warnings, or instructions which shall then be affixed in their proper place on the carrier.

4.4 Fuel Handling and Storage

4.4.1 The user shall supervise the storage and handling of liquid fuels (when used) to be certain that it is in accordance with appropriate paragraphs of ANSI/NFPA 505 and ANSI/NFPA 30.

4.4.2 Storage and handling of liquefied petroleum gas fuels shall be in accordance with appropriate paragraphs of ANSI/NFPA 505 and ANSI/NFPA 58. If such storage or handling is not in compliance with these standards, the user shall prevent the carrier from being used until such storage and handling is in compliance with these standards.

4.5 Changing and Charging Storage Batteries for Electric Personnel and Burden Carriers

4.5.1 The user shall require battery changing and charging facilities and procedures to be in accordance with appropriate paragraphs of ANSI/NFPA 505.

4.5.2 The user shall periodically inspect facilities and review procedures to be certain that appropriate paragraphs of ANSI/NFPA 505, are strictly complied with, and shall familiarize carrier operators with it.

4.6 Hazardous Locations

4.6.1 The user shall determine the hazard classification of the particular atmosphere or location in which the carrier is to be used in accordance with ANSI/NFPA 505.

4.6.2 The user shall permit in hazardous areas only those carriers approved and of the type required by ANSI/NFPA 505.

4.7 Lighting for Operating Areas

4.7.1 The user, in accordance with his responsibility to survey the environment and operating conditions, shall determine if the carrier requires lights and, if so, shall equip the carrier with appropriate lights. (93)

Copyright ASME International
Provided by IHS under license with ASME
No reproduction or networking permitted without license from IHS
Not for Resale

4.8 Control of Noxious Gases and Fumes

4.8.1 When equipment powered by internal combustion engines is used in enclosed areas, the atmosphere shall be maintained within limits specified in the American Conference of Governmental Industrial Hygienists publication, "Threshold Limit Values for Chemical Substances and Physical Agents in the Workroom Environment." This shall be accomplished by ventilation provided by the user, and/or the installation, use, and proper maintenance of emission control equipment recommended or provided by the manufacturer of the equipment.

4.9 Warning Device(s)

4.9.1 The user shall make periodic inspections of the carrier to be certain that the sound-producing and/or visual device(s) are maintained in good operating condition.

4.9.2 The user shall determine if operating conditions require the carrier to be equipped with additional sound-producing and/or visual devices and be responsible for providing and maintaining such devices, in accordance with the manufacturer's recommendations.

5 OPERATING SAFETY RULES AND PRACTICES

5.1 Personnel and Burden Carrier Operator Qualifications

5.1.1 Only persons who are trained in the proper operation of the carrier shall be authorized to operate the carrier. Operators shall be qualified as to visual, auditory, physical, and mental ability to safely operate the equipment according to Section 5 and all other applicable parts of this Standard.

5.2 Personnel and Burden Carrier Operators' Training

5.2.1 The user shall conduct an operators' training program.

5.2.2 Successful completion of the operators' training program shall be required by the user before operation of the carrier. The program shall be presented in its entirety to all new operators and not condensed for those claiming previous experience.

5.2.3 The user should include in the operators' training program the following:

(*a*) instructional material provided by the manufacturer;

(*b*) emphasis on safety of passengers, material loads, carrier operator, and other employees;

(*c*) general safety rules contained within this Standard and the additional specific rules determined by the user in accordance with this Standard, and why they were formulated;

(*d*) introduction of equipment, control locations and functions, and explanation of how they work when used properly and when used improperly; and surface conditions, grade, and other conditions of the environment in which the carrier is to be operated;

(*e*) operational performance tests and evaluations during, and at completion of, the program.

5.3 Personnel and Burden Carrier Operator Responsibility

5.3.1 Operators shall abide by the following safety rules and practices in paras. 5.4, 5.5, 5.6, and 5.7.

5.4 General

5.4.1 Safeguard the pedestrians at all times. Do not drive carrier in a manner that would endanger anyone.

5.4.2 Riding on the carrier by persons other than the operator is authorized only on personnel seat(s) provided by the manufacturer. All parts of the body shall remain within the plan view outline of the carrier.

5.4.3 When a carrier is to be left unattended, stop carrier, apply the parking brake, stop the engine or turn off power, turn off the control or ignition circuit, and remove the key if provided. Block the wheels if machine is on an incline.

5.4.4 A carrier is considered unattended when the operator is 25 ft (7.6 m) or more from the carrier which remains in his view, or whenever the operator leaves the carrier and it is not within his view. When the operator is dismounted and within 25 ft (7.6 m) of the carrier still in his view, he still must have controls neutralized, and the parking brake(s) set to prevent movement.

5.4.5 Maintain a safe distance from the edge of ramps and platforms.

5.4.6 Use only approved carriers in hazardous locations, as defined in the appropriate safety standards.

5.4.7 Report all accidents involving personnel, building structures, and equipment.

Copyright ASME International
Provided by IHS under license with ASME
No reproduction or networking permitted without license from IHS
Not for Resale

5.4.8 Operators shall not add to, or modify, the carrier.

5.4.9 Carriers shall not be parked or left unattended such that they block or obstruct fire aisles, access to stairways, or fire equipment.

5.5 Traveling

5.5.1 Observe all traffic regulations, including authorized speed limits. Under normal traffic conditions keep to the right. Maintain a safe distance, based on speed of travel, from a carrier or vehicle ahead; and keep the carrier under control at all times.

5.5.2 Yield the right of way to pedestrians, ambulances, fire trucks, or other carriers or vehicles in emergency situations.

5.5.3 Do not pass another carrier or vehicle traveling in the same direction at intersections, blind spots, or at other dangerous locations.

5.5.4 Keep a clear view of the path of travel, observe other traffic and personnel, and maintain a safe clearance.

5.5.5 Slow down or stop, as conditions dictate, and activate the sound-producing warning device at cross aisles and when visibility is obstructed at other locations.

5.5.6 Ascend or descend grades slowly.

5.5.7 Avoid turning, if possible, and use extreme caution on grades, ramps, or inclines; normally travel straight up and down.

5.5.8 Under all travel conditions the carrier shall be operated at a speed that will permit it to be brought to a stop in a safe manner.

5.5.9 Make starts, stops, turns, or direction reversals in a smooth manner so as not to shift the load, endanger passengers, or overturn the carrier.

5.5.10 Do not indulge in dangerous activities, such as stunt driving or horseplay.

5.5.11 Slow down when approaching, or on, wet or slippery surfaces.

5.5.12 Do not drive carrier onto any elevator unless specifically authorized to do so. Approach elevators slowly, and then enter squarely after the elevator car is properly leveled. Once on the elevator, neutralize the controls, shut off power, and set parking brakes. It is advisable that all other personnel leave the elevator before a carrier is allowed to enter or exit.

5.5.13 Avoid running over loose objects, potholes, and bumps.

5.5.14 To negotiate turns, reduce speed to improve stability, then turn hand steering wheel or tiller in a smooth, sweeping motion.

5.6 Loading

5.6.1 Handle only stable and safely arranged loads. When handling off-center loads which cannot be centered, operate with extra caution.

5.6.2 Handle only loads within the capacity of the carrier as specified on the nameplate.

5.6.3 Handle loads exceeding the dimensions used to establish carrier capacity with extra caution. Stability and maneuverability may be adversely affected.

5.7 Operator Care of Personnel and Burden Carriers

5.7.1 At the beginning of each shift during which the carrier will be used, the operator shall check the carrier condition and inspect the tires, warning devices, lights, battery(s), speed and directional controllers, brakes, and steering mechanism. If the carrier is found to be in need of repair, or in any way unsafe, the matter shall be reported immediately to the designated authority and the carrier shall not be operated until it has been restored to safe operating condition.

5.7.2 If during operation the carrier becomes unsafe in any way, the matter shall be reported immediately to the designated authority, and the carrier shall not be operated until it has been restored to safe operating condition.

5.7.3 Do not make repairs or adjustments unless specifically authorized to do so.

5.7.4 The engine shall be stopped and the operator shall leave the carrier while refueling.

5.7.5 Spillage of oil or fuel shall be carefully and completely absorbed or evaporated and fuel tank cap replaced before starting engine.

5.7.6 Do not operate a carrier with a leak in the fuel system or battery(s).

5.7.7 Do not use open flames for checking electrolyte level in storage battery(s) or liquid level in fuel tanks.

Copyright ASME International
Provided by IHS under license with ASME
No reproduction or networking permitted without license from IHS Not for Resale

6 MAINTENANCE PRACTICES

6.1 Introduction

6.1.1 Carriers may become hazardous if maintenance is neglected. Therefore, maintenance facilities, trained personnel, and procedures shall be provided. Such facilities may be on or off the premises.

6.2 Maintenance Procedures

6.2.1 Maintenance and inspection of all carriers shall be performed in conformance with the manufacturer's recommendations and the following practices.

(*a*) A scheduled preventive maintenance, lubrication, and inspection system shall be followed.

(*b*) Only qualified and authorized personnel shall be permitted to maintain, repair, adjust, and inspect carriers.

(*c*) Before undertaking maintenance or repair, follow the manufacturer's recommendations for immobilizing the carrier.

(*d*) Block chassis before working underneath it.

(*e*) Before disconnecting any part of the engine fuel system of a gasoline or diesel powered carrier with gravity feed fuel systems, be sure shutoff valve is closed, and run engine until fuel system is depleted and engine stops running.

(*f*) Before disconnecting any part of the engine fuel system of LP gas powered carriers, close the LP gas cylinder valve and run the engine until fuel in the system is depleted and the engine stops running.

(*g*) Operation to check performance of the carrier shall be conducted in an authorized area where safe clearance exists.

(*h*) Before commencing operation of the carrier, follow the manufacturer's instructions and recommended procedures.

(*i*) Avoid fire hazards and have fire protection equipment present in the work area. Do not use an open flame to check level or leakage of fuel, battery electrolyte, or coolant. Do not use open pans of fuel or flammable cleaning fluids for cleaning parts.

(*j*) Properly ventilate the work area.

(*k*) Handle LP gas cylinders with care. Physical damage, such as dents, scrapes, or gouges, may dangerously weaken the tank and make it unsafe for use.

(*l*) Brakes, steering mechanisms, speed and directional control mechanisms, warning devices, lights, governors, guards, and safety devices shall be inspected regularly and maintained in a safe operating condition.

(*m*) Special carriers or devices designed and approved for hazardous area operation shall be inspected to ensure that maintenance preserves the original approved safe operating features.

(*n*) Fuel systems shall be checked for leaks and condition of parts. If a leak is found, action shall be taken to prevent the use of the carrier until the leak has been eliminated.

(*o*) The carrier manufacturer's capacity, operation, and maintenance instruction plates, tags, or decals shall be maintained in legible condition.

(*p*) Batteries, motors, speed and directional controllers, limit switches, protective devices, electrical conductors, and connections shall be inspected and maintained in conformance with manufacturer's recommended procedures.

(*q*) Carriers shall be kept in a clean condition to minimize fire hazards and facilitate detection of loose or defective parts.

(*r*) Modifications and additions which affect capacity and safe machine operation shall not be performed by the customer or user without manufacturer's prior written authorization; where authorized modifications have been made, the user shall ensure that capacity, operation, warning, and maintenance instruction plates, tags, or decals are changed accordingly.

(*s*) Care shall be taken to ensure that all replacement parts are interchangeable with the original parts and of a quality at least equal to that provided in the original equipment.

PART III
FOR THE MANUFACTURER

7 DESIGN AND CONSTRUCTION STANDARDS

7.1 Introduction

7.1.1 Part III sets forth safety standards for carriers at the time of manufacture.

7.2 Nameplates, Markings, and Instructions

7.2.1 On every carrier, the manufacturer shall install a durable, corrosion resistant nameplate, legibly inscribed with the following information:

(*a*) carrier model or serial number, or both. The serial number shall also be stamped on the main frame of the carrier;

(*b*) approximate operating weight of the carrier in pounds (lb) or kilograms (kg), or both;

(*c*) designation of compliance with the mandatory requirements of Part III of this Standard;

Copyright ASME International
Provided by IHS under license with ASME
No reproduction or networking permitted without license from IHS
Not for Resale

(*d*) type designation to show conformance with ANSI/NFPA 505 and either ANSI/UL 583 or ANSI/UL 558;

(*e*) the rated capacity.

7.2.2 Where applicable, marking authorized by the appropriate nationally recognized testing laboratory shall be installed on approved carriers.

7.2.3 On battery-electric carriers, the nameplate shall also show:

(*a*) carrier weight without battery (batteries);

(*b*) the maximum service weights of the battery (batteries) and tray to be used, and

(*c*) normal voltage for which the carrier is designed.

7.2.4 For batteries in a lift-out tray with total combined service weight of batteries and tray exceeding 100 lb (45 kg), the maximum combined weight of the batteries and tray shall be legibly stamped on the battery tray near the lifting means with the following information:

SERVICE WEIGHT
_____ LB
_____ KG

7.2.5 Each carrier shall be supplied with an owner's manual furnished by the manufacturer. This manual shall contain instructions for setup, assembly, safe and proper operation, maintenance, adjustment, and service.

7.3 General Requirements

7.3.1 Every carrier shall be equipped with a horn, whistle, gong, or other sound producing device(s) that can be made to function easily by the operator when needed.

7.3.2 Guards or other means shall be provided to protect the operator, in the normal operating position, from particles thrown by the tires or wheels.

7.3.3 The operator, in the normal operating position, shall be protected from moving parts of the carrier that represent a hazard to that operator.

7.3.4 Sit down rider carriers shall be provided with seat(s) with hip restraints.

7.3.5 Foot space in accordance with the 95th percentile man, as per the National Aeronautics and Space Administration (NASA) publication, "Anthropometric Sourcebook, Vol. 1, Anthropometry for Designers," shall be provided for all passengers and shall be within the plan view outline of the carrier.

7.3.6 Handholds shall be provided for the operator and each passenger. A steering wheel or two-hand tiller shall be considered a handhold for the operator. A handhold shall be provided for each additional intended passenger and placed in such a manner that when grasping the handhold, the occupant's hands will be within the plan view outline of the carrier.

7.3.7 Steering

(*a*) Carriers employing a handwheel or a horizontal lever (horizontal motion) or a tiller bar for steering control shall have such controls designed so the carrier will respond as follows when moving in a forward direction: movement of the steering control in a clockwise direction shall steer the carrier to the operator's right.

(*b*) All steering controls shall be confined within the plan view outline of the carrier or provided with guards that protect against injury to the operator during movement of the controls, and while passing obstacles, walls, columns, etc.

7.3.8 Travel Controls

(*a*) Travel controls shall be so arranged that the carrier will not operate unless control(s) has been actuated for both direction and speed.

(*b*) Accelerator, if foot operated, shall increase speed when depressing the pedal downward or forward.

(*c*) Service brakes, if foot operated, shall be energized by depressing the pedal downward or forward.

(*d*) If a single foot pedal controls both acceleration and braking, depressing the pedal shall increase speed and releasing the pedal shall apply brakes.

(*e*) A manually operated device shall be provided to disconnect all travel control circuits.

(*f*) If both forward and reverse directions are provided, direction control shall clearly and durably identify forward and reverse directions.

(*g*) A parking brake shall be provided.

(*h*) Control pedals and control platforms that are stood on or engaged by the operator's feet shall have skid resistant surfaces.

7.3.9 Stability Tests

(*a*) *General Test Conditions and Requirements*

(*1*) A test platform shall be used that is rigid, flat, and constructed to be an adjustable slope, single plane (tilt table) with a surface finish adequate to prevent sliding of the tires. The table surface shall be large enough to support all wheels of the carrier to be tested.

(*2*) Tire inflation on all wheels shall be in accordance with the carrier manufacturer's specifications or recommendations.

(*3*) Prior to the addition of test loads, the carrier to be tested shall be readied to reflect its operating weight

Copyright ASME International
Provided by IHS under license with ASME
No reproduction or networking permitted without license from IHS Not for Resale

and shall include all accessory items which, when installed, will decrease the stability of the carrier.

(4) The manufacturer's specified maximum material load shall be designated as the test load, placed on the load bed of the carrier, and secured thereto such that its center of gravity is directly above the geometric center of the load bed. The height of the center of gravity of the test load above the load bed shall be determined by Fig. 1.

(*a*) To obtain the proper height of the center of gravity for the test load from Fig. 1, first calculate the bed area of the carrier. With this result, enter the table at the bottom, read vertically upward to the line identified as the payload which represents the manufacturer's specified maximum material load or interpolate between the lines to get an intermediate point, and then read to the left margin for center of gravity height.

(*b*) On special purpose carriers designed for unusual loadings, the maximum load height above the bed shall be specified on the nameplate. This carrier shall be tested with a test load having a center of gravity located at a point above the carrier load bed that is one-half of the maximum specified load height.

(5) A 200 lb (90 kg) weight shall be secured to each seat, representing the operator and each passenger as specified. If seats are adjustable, they shall be adjusted to that position representing the least stable condition of stability in each test. The center of gravity of the weight(s) is to be 6 in. (152 mm) above the lowest point of the operator supporting surface and 10 in. (254 mm) forward of the seat back. If a seat back is not used, then 10 in. (254 mm) will be measured from the position of the back of an actual operator when seated normally on the unit.

(6) *Calculated Stability Factors.* In order to provide a means for handling everyday stability determinations, stability factors as related to the tilting platform tests may be calculated. These calculations will usually vary for each manufacturer's product and normally take into account variations in design, including tires and other deflections, and provide a means for predicting with reasonable accuracy the stability of carriers. Tilting platform tests are the basis for establishing factors used in stability calculations. When comparing calculations with actual tilting platform tests, the actual test results are to be considered the true measure of stability.

(*b*) *Lateral Stability Test*

(*1*) *Requirements*

(*a*) The position of the carrier on the test platform shall be maintained by parking brakes or similar means, but not by use of wheel chocks.

(*b*) Stability determination and measurements shall be taken under static conditions.

(*2*) *Procedure.* The carrier with test load in place shall be put on the tilt platform in accordance with Figs. 3, 4, or 5 (depending on type and number of supporting wheels).

(*a*) Four-wheel carriers shall be positioned such that a line from the center of contact of a nonsteer wheel (or outermost wheel where multiple wheels are used) to the center of contact of the steer wheel nearest the tilting platform axis is parallel to the tilting axis of the platform.

(*b*) Three-wheel carriers shall be positioned such that a line from the center contact of a nonsteer wheel (or outermost wheel where multiple wheels are used) to the point of contact of the steer wheel is parallel to the tilting axis of the platform. On three-wheel carriers with dual steer wheels, the line described above shall be drawn to the point of contact of the one steer wheel nearest the tilting platform axis.

(*c*) The steer wheel(s) on both three- and four-wheel carriers shall be turned to be parallel to the tilting platform axis.

(*d*) The stability of the carrier shall be determined directly by tilting the platform upon which the carrier is placed to the gradient specified in Fig. 2.

(*e*) To obtain the proper gradient from Fig. 2 to conduct this test, read vertically upward from the value of maximum speed with test load to the reference line above, and then horizontally to the left margin.

(*f*) Tilt platform back to level.

(*g*) Recheck the position of all loads to ensure that they still conform to the test requirements.

(*h*) Recheck the tire inflation of all tires to ensure that they still conform to the test requirements.

(*3*) The test is to be conducted with one side of the carrier facing the tilt axis and repeated with the other side facing the tilt axis.

(*4*) Repeat all tests without payload and passenger load, using operator's simulated weight only.

(*5*) *Test Acceptance.* If the carrier did not overturn when tested in accordance with the above requirements, it meets the test requirements.

(*c*) *Longitudinal Stability Tests*

(*1*) *Requirements*

(*a*) The position of the carrier on the test platform shall be maintained by parking brakes or similar means, but not by use of wheel chocks.

(*b*) Stability determination and measurements shall be taken under static conditions.

(*2*) *Downgrade Test*

(*a*) *Procedure.* The loaded carrier shall be placed on the tilting platform such that the longitudinal center line is perpendicular to the platform axis of tilt (see Fig. 6). The forward end of the carrier will be fac-

Copyright ASME International
Provided by IHS under license with ASME
No reproduction or networking permitted without license from IHS
Not for Resale

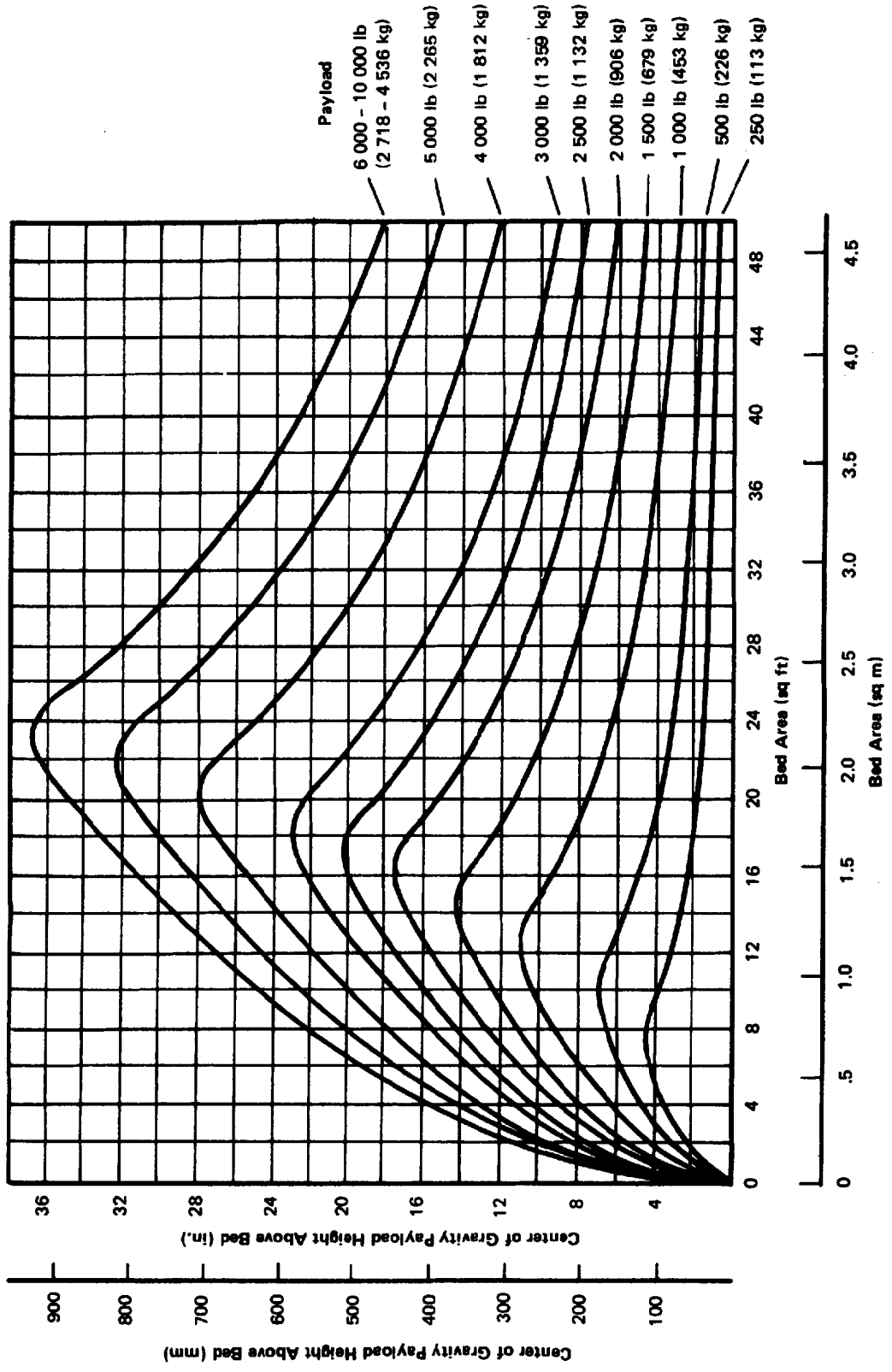

FIG. 1 CENTER OF GRAVITY PAYLOAD HEIGHT ABOVE BED

Not for Resale

Copyright ASME International
Provided by IHS under license with ASME
No reproduction or networking permitted without license from IHS

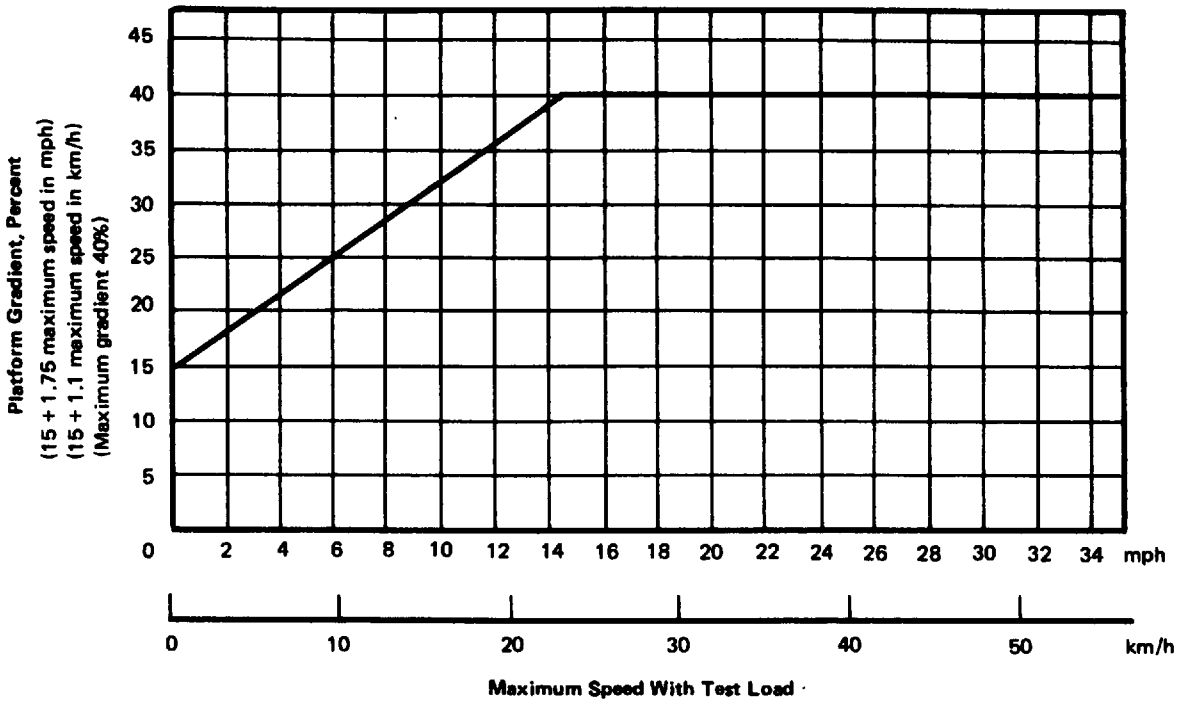

FIG. 2 PLATFORM GRADIENT ANGLE FOR LATERAL STABILITY

ing the platform axis of tilt. Tilt the platform to a 25% gradient and repeat items listed in paras. 7.3.9(b)(2)(f) through (b)(2)(h).

(*b*) Repeat all tests without payload and passenger load, using operator's simulated weight only.

(*c*) *Test Acceptance.* If the carrier did not overturn when tested in accordance with the above requirements, it meets the test requirements.

(*3*) *Upgrade Test.* Same as para. 7.3.9(c)(2) except that the rear end of the carrier will be facing the platform axis of tilt.

7.3.10 Brakes

(*a*) All carriers shall have service and parking brake systems. These may be combined.

(*b*) *Test Conditions and Requirements*

(*1*) The test surface shall be level (a maximum gradient of 0.5%), and permit development of the required drawbar drag force.

(*2*) The drawbar shall be horizontal and attached to the carrier as close to the ground as possible but at a point no more than 36 in. (914 mm) above the test surface.

(*3*) The carrier shall be prepared according to the requirements of para. 7.3.9(a).

(*4*) If the carrier is supplied with a brake power boost system, it shall be operating.

(*5*) Travel controls shall be in neutral position and the parking brake shall be disengaged if independent of the service brake. For carriers with split loop circuit hydrostatic drives, the travel control shall be engaged due to the free-wheeling condition existing when the controls are in neutral.

(*c*) *Service Brake Test*

(*1*) For pedal(s) having a downward movement to apply the brakes, the required brake performance shall be attained with a pedal force of not more than 125 lb (57 kg) applied to the center of the pedal.

(*2*) For brake pedal(s) having an upward movement to apply the brakes, the required brake performance shall be attained with the pedal fully released. However, the brake linkage shall be such that the pedal will be fully depressed and the brake released by a force of not more than 65 lb (30 kg). In the case of combination treadle brake and accelerator control, the brake shall be fully released by the downward application of a pedal force on the accelerator portion of not more than 125 lb (57 kg).

(*3*) For handgrip (squeeze) operated brakes, the force per handgrip to achieve the required brake perfor-

Copyright ASME International
Provided by IHS under license with ASME
No reproduction or networking permitted without license from IHS
Not for Resale

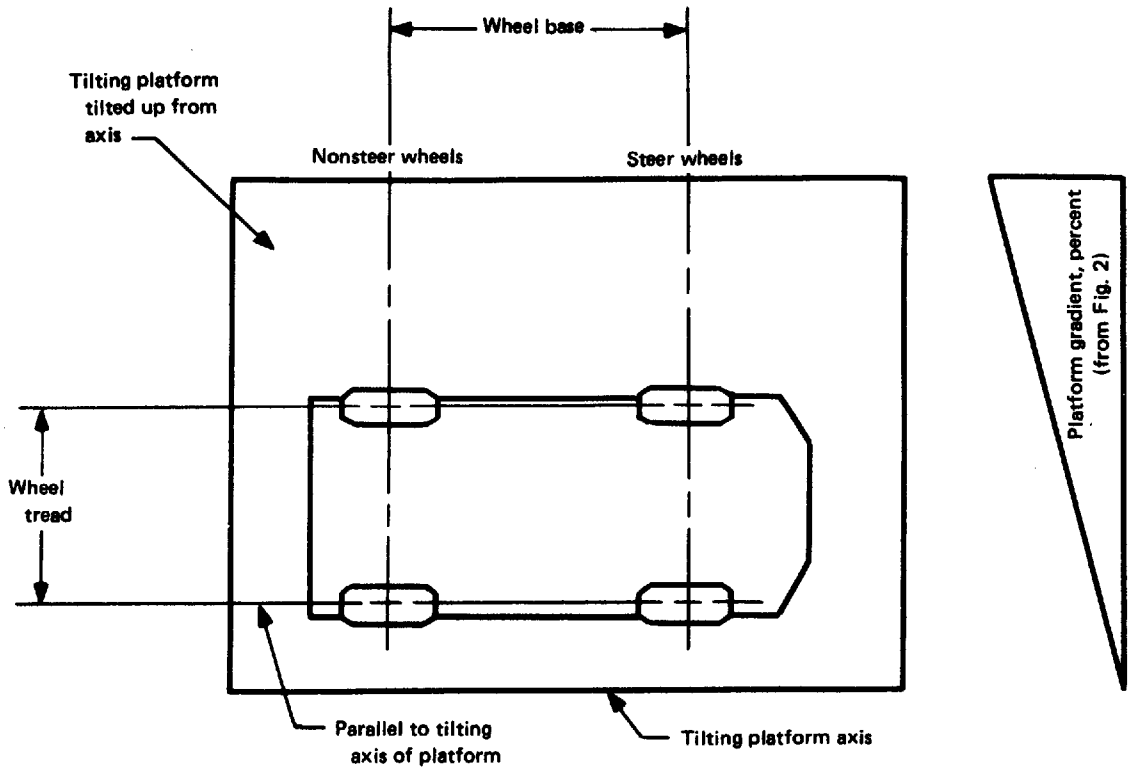

FIG. 3 CARRIER PLACEMENT ON LATERAL TILTING PLATFORM (FOUR-WHEEL)

mance shall be limited to a maximum of 50 lb (23 kg) applied at midpoint of the brake handle.

(*4*) Measure drawbar drag in forward and reverse direction with dynamometer while towing at no more than 1 mph (1.6 km/h) in both directions with brake applied as noted in paras. 7.3.10(c)(1) through (3).

(*5*) *Test Acceptance.* The carrier meets the test requirements if the drawbar drag force F measured per the above test procedure is equal to, or greater than, the following relationship:

$$F_{(lb)} = \frac{(3V)\ (W)}{100}$$

where

F = drawbar drag force, lb
V = manufacturer's recommended maximum travel speed of carrier, mph, when loaded per the test requirements
W = weight of carrier as readied for this test [see para. 7.3.9(a)], lb

The factor $3V$ (per above) is not required to exceed 25. (Example: If maximum carrier speed is 11 mph, the value of $3V$ to be used in the formula shall be 25, not 3(11) or 33 as would be indicated. If the maximum speed of the carrier is 7 mph, the value of $3V$ to be used is 3(7) or 21.)

For metric measurements, the formula becomes:

$$F_{(kg)} = \frac{(1.86V)\ (W)}{100}$$

where

F = drawbar drag force, kg
V = speed, km/h
W = weight, kg

(*d*) *Alternate Service Brake Test*

(*1*) *Procedure.* The service brakes shall hold the carrier stationary on the tilt table described under para. 7.3.9(c)(1) when positioned to face upgrade and again downgrade with its longitudinal center line perpendicular to the tilting platform axis.

(*2*) *Test Acceptance.* The carrier meets the test requirement if no slippage or rolling of braked tires on the platform occurs when the table is positioned at a gra-

Copyright ASME International
Provided by IHS under license with ASME
No reproduction or networking permitted without license from IHS
Not for Resale

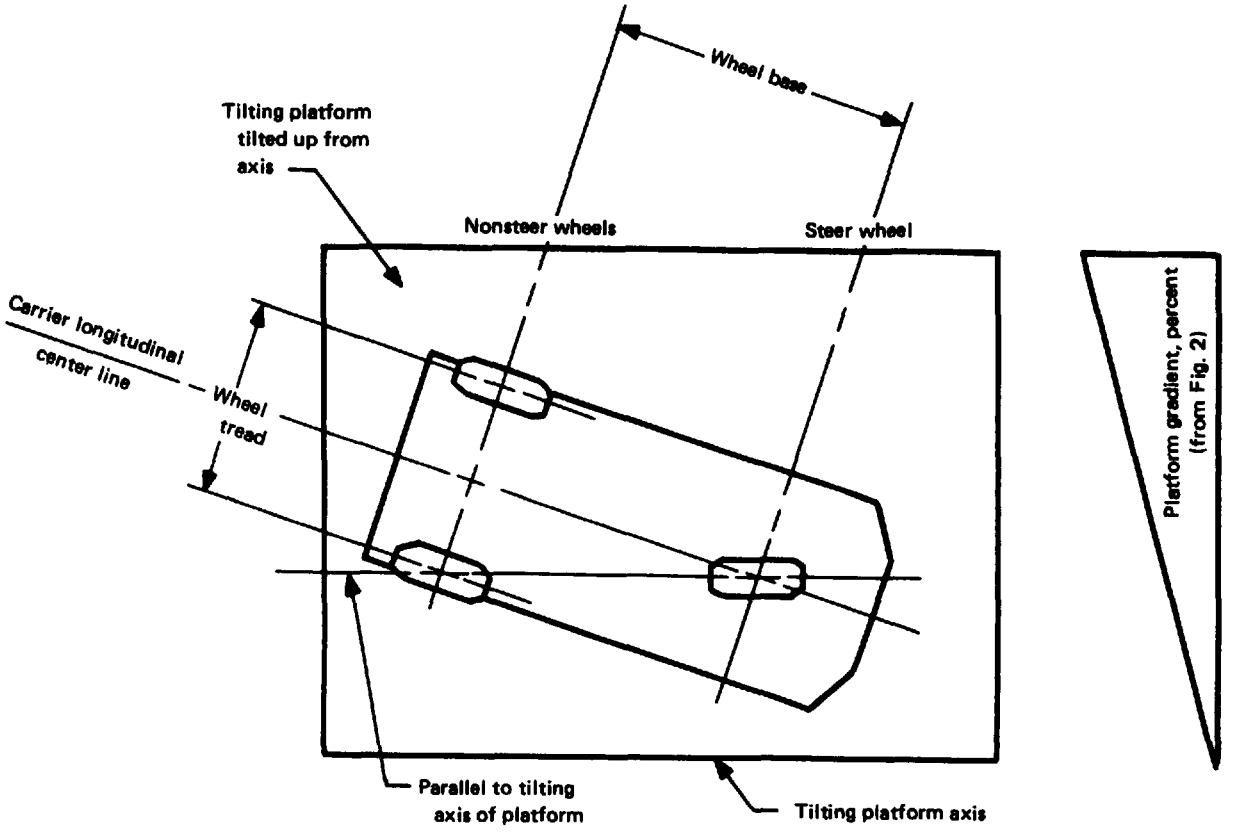

FIG. 4 CARRIER PLACEMENT ON LATERAL TILTING PLATFORM (THREE-WHEEL)

dient equal to the value of $3V$ (expressed in percent grade) as defined in para. 7.3.10(c)(5) and the brakes shall be applied in accordance with paras. 7.3.10(c)(1), (2), or (3).

(*e*) *Brake Control Tests*

(*1*) For carriers having a downward movement of brake pedal to apply the service brake(s), the system shall be capable of withstanding a brake pedal force of 250 lb (113 kg) for 1 min without failure of any component.

(*2*) For carriers having an upward movement of the brake pedal to apply the service brake(s), a force of 200% of the maximum possible setting of the actuating device shall not cause failure of any component.

(*3*) For carriers having handgrip (squeeze) operated brake(s), the system shall be capable of withstanding a force of 160 lb (73 kg) at the midpoint of the brake handle.

(*f*) *Parking Brake Test*

(*1*) A parking brake (or mechanism), which may be part of or include the service brake, shall be provided and be capable of holding the carrier stationary on the test tilt table for a period of not less than 15 min while carrying rated load. The test grade shall be 15%.

(*2*) The carrier shall be tested when positioned to face upgrade and again downgrade with its longitudinal center line perpendicular to the grade or tilting platform axis (see Fig. 6).

Copyright ASME International
Provided by IHS under license with ASME
No reproduction or networking permitted without license from IHS
Not for Resale

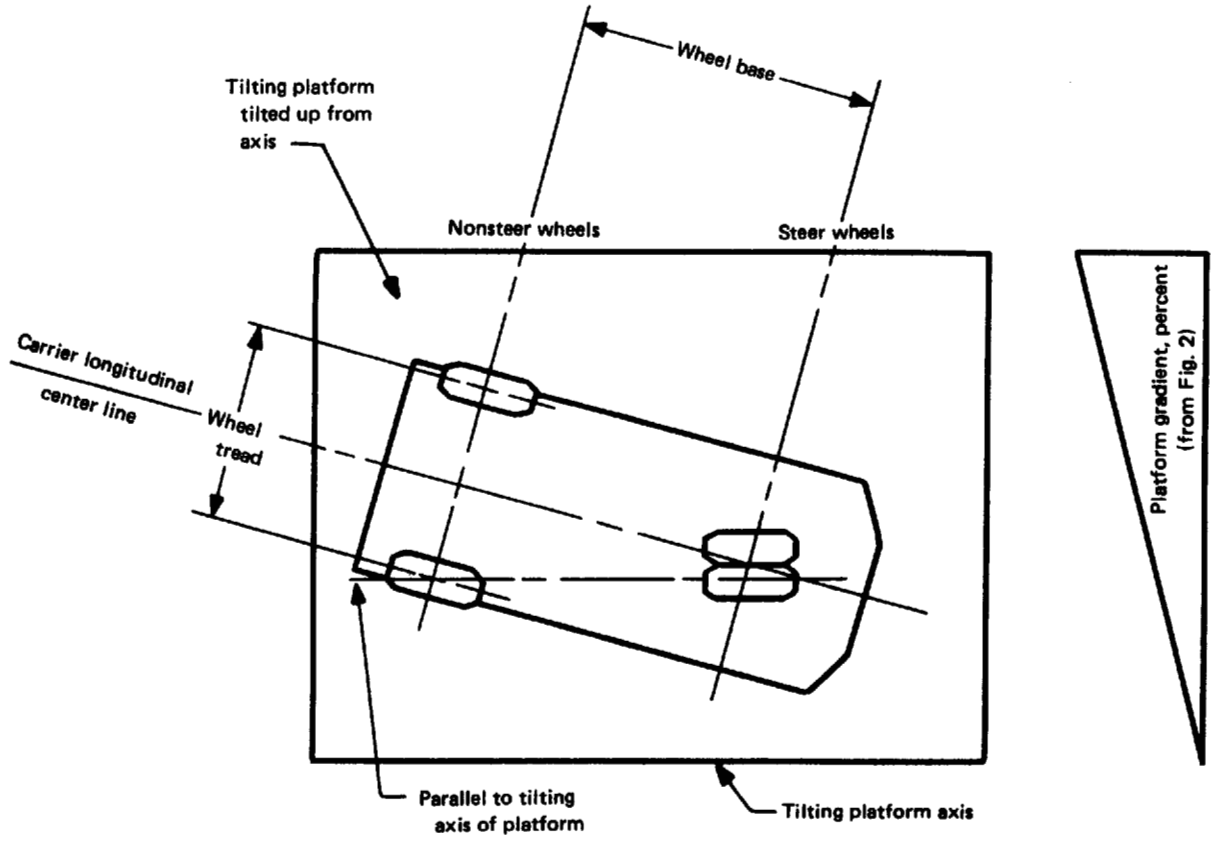

FIG. 5 CARRIER PLACEMENT ON LATERAL TILTING PLATFORM (FOUR-WHEEL, DUAL FRONT AXLE)

Copyright ASME International
Provided by IHS under license with ASME
No reproduction or networking permitted without license from IHS Not for Resale

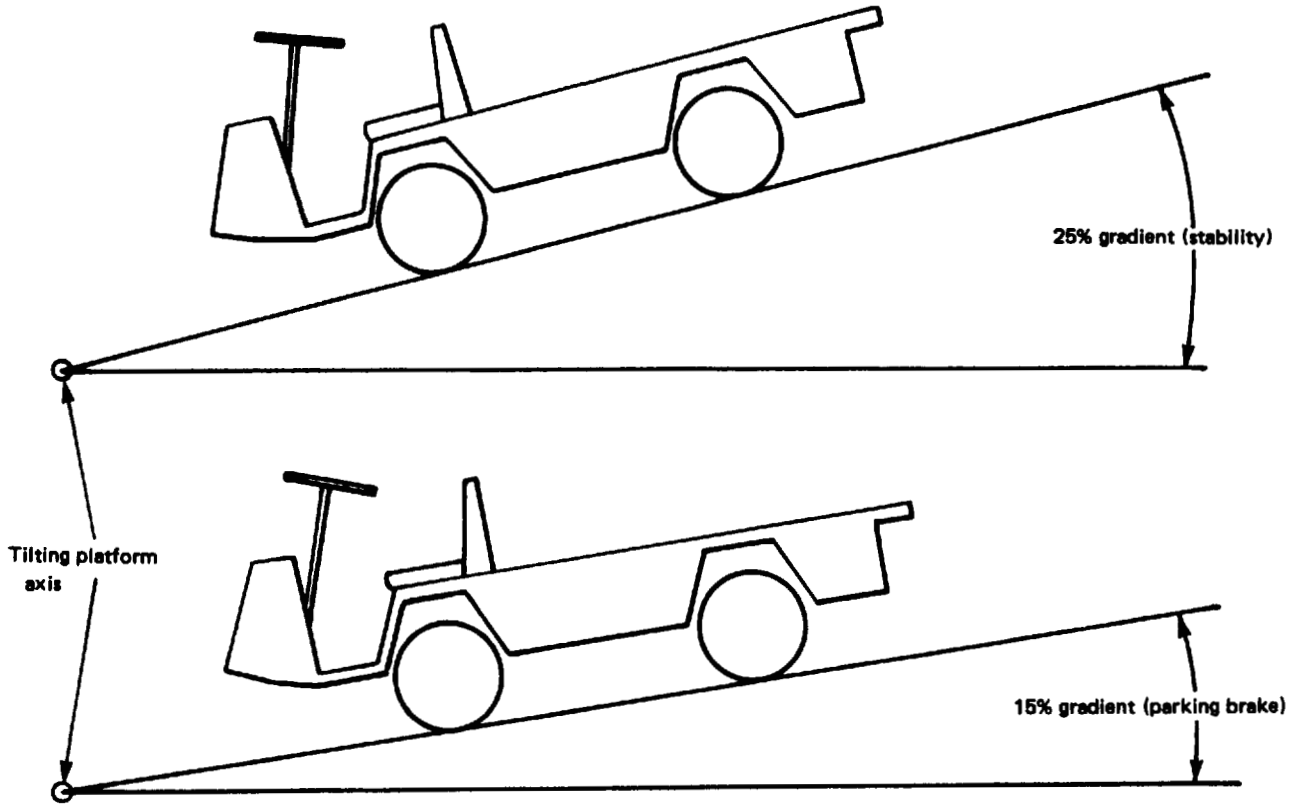

FIG. 6 CARRIER PLACEMENT ON LONGITUDINAL PLATFORM (DOWNGRADE POSITION INDICATED)

Copyright ASME International
Provided by IHS under license with ASME
No reproduction or networking permitted without license from IHS Not for Resale

APPENDIX A (93)
REFERENCES

(This Appendix is an integral part of ASME B56.8-1993 and is placed after the main text for convenience.)

The following are safety standards and codes (unless otherwise noted) referenced within this Standard. It is the intent of this Standard to refer to the standards and codes listed below in their latest editions when they are referenced within the Standard.

NASA Publication	Anthropometric Sourcebook, Vol. 1, Anthropometry for Designers
ANSI/NFPA 30-1990	Flammable and Combustible Liquids Code
ANSI/NFPA 58-1992	Storage and Handling of Liquefied Petroleum Gases
ANSI/NFPA 505-1992	Fire Safety Standard for Powered Industrial Trucks — Type Designations, Areas of Use, Maintenance and Operation
ANSI/UL 558 (latest revision)	Standard for Safety for Internal-Combustion-Engine-Powered Industrial Trucks
ANSI/UL 583 (latest revision)	Standard for Safety for Electric-Battery-Powered Industrial Trucks
ANSI Z94.0-1989	Industrial Engineering Terminology (not a Safety Standard)
ACGIH Publication	Threshold Limit Values for Chemical Substances and Physical Agents in the Workroom Environment

Copies of the above listed standards and codes are available from:

NASA RP-1024 (N79-11734)
National Technical Information Service
U.S. Department of Commerce
Springfield, VA 22161

American Conference of Governmental Industrial Hygienists
6500 Glenway Building, D5
Cincinnati, OH 45211

American National Standards Institute, Inc. (ANSI)
11 West 42nd Street
New York, NY 10036

National Fire Protection Association (NFPA)
Batterymarch Park
Quincy, MA 02269

Underwriters Laboratories, Inc. (UL)
333 Pfingsten Road
Northbrook, IL 60062

Copyright ASME International
Provided by IHS under license with ASME
No reproduction or networking permitted without license from IHS Not for Resale

APPENDIX B
GLOSSARY OF COMMONLY USED WORDS AND PHRASES[1]

(This Appendix is not a part of ASME B56.8-1993 and is included for information purposes only.)

accelerator — a device that controls the speed of a carrier

(93) *approved* — the word *approved* means the classification or listing as to fire, explosion, and electric shock hazard by a nationally recognized testing laboratory, i.e., a laboratory qualified and equipped to conduct examinations and tests such as those prescribed by Underwriters Laboratories, Inc., and Factory Mutual Research Corp.

(93) *battery-electric personnel and burden carrier* — see *carrier, battery-electric personnel and burden*

(93) *brake, parking* — a device(s) to prevent inadvertent movement of the stationary vehicle

(93) *brake, service* — a device designed to bring a moving carrier to a stop

(93) *carrier, battery-electric personnel and burden* — an electric carrier in which the power source is a storage battery

(93) *carrier, electric personnel and burden* — a carrier in which the principal energy is transmitted from power sources to motor(s) in the form of electricity

(93) *carrier, personnel and burden* — a mobile power driven machine which is not self-loading, used for transporting material and/or personnel on indoor and outdoor improved surfaces, but not for use on public highways

center of gravity (of test load) — that point at which the load mass is concentrated. It is located horizontally in the center of the load bearing surface, and vertically by its distance above the load bearing surface.

material load — weight of material to be carried, excluding personnel

operating weight — weight of carrier with full fuel load, without material load or personnel load

operator — a trained and authorized person who controls any function(s) of a carrier (93)

operator platform — see *platform, operator* (93)

parking brake — see *brake, parking* (93)

personnel and burden carrier — see *carrier, personnel and burden* (93)

personnel and burden carrier, electric — see *carrier, electric personnel and burden* (93)

platform, operator — a platform or area from which a standing person controls the functions of a carrier or other material handling device (93)

powered industrial truck — see *truck, powered industrial* (93)

rated capacity — the total weight of material load and personnel load for a carrier. The total personnel load for personnel carriers.

service brake — see *brake, service* (93)

travel controls — devices that control the speed, braking, forward and reverse direction of the carrier (93)

truck, powered industrial — a mobile power propelled truck used to carry, push, pull, lift, stack, or tier material (93)

user — the person(s) or organization(s) responsible for the operation and maintenance of a carrier. This would normally be the owner, lessee, employer, or operator.

[1]For additional terms, see latest edition of ANSI Z94.0, Industrial Engineering Terminology.

Copyright ASME International
Provided by IHS under license with ASME
No reproduction or networking permitted without license from IHS
Not for Resale

ASME B56.8 Interpretations

Replies to Technical Inquiries
August 1989 — September 1993

FOREWORD

This publication includes all of the written replies issued between the indicated dates by the Secretary, speaking for the ASME B56 Committee on Powered and Nonpowered Industrial Trucks, to inquiries concerning interpretations on technical aspects of ASME B56.8, Safety Standard for Personnel and Burden Carriers.

These replies are taken verbatim from the original letters except for a few typographical corrections and some minor editorial corrections made for the purpose of improved clarity. In some few instances, a review of the interpretation revealed a need for corrections of a technical nature; in these cases a corrected interpretation follows immediately after the original reply.

These interpretations were prepared in accordance with the accredited ASME procedures. ASME procedures provide for reconsideration of these interpretations when or if additional information is available which the inquirer believes might affect the interpretation. Further, persons aggrieved by this interpretation may appeal to the cognizant ASME Committee or Subcommittee. ASME does not "approve," "certify," "rate," or "endorse" any item, construction, proprietary device, or activity.

Copyright ASME International
Provided by IHS under license with ASME
No reproduction or networking permitted without license from IHS
Not for Resale

Interpretation: 8-1

Subject: ASME/ANSI B56.8-1988

Date Issued: August 1, 1989

Question: For stand-up operation, how can the 200 pound weight on each vehicle seat be simulated?

Reply: Section 7.3.9(a)(5) of ASME/ANSI B56.8-1988 addresses sit-down carriers. Currently, there is no parallel provision for stand-up units. Therefore, the Committee cannot provide an interpretation of something that does not appear in the Standard.

Consideration of the addition of a parallel provision for stand-up units will be on the agenda for the next meeting of the B56.8 Subcommittee.

Interpretation: 8-2

Subject: ASME/ANSI B56.8-1988

Date Issued: November 15, 1989

Question: Is Section 7.2.1(d) of ASME/ANSI B56.8-1988 to be interpreted that specific type designations which conform should be listed at this location on the name plate, or is it interpreted that conformance *is required* to ANSI/NFPA 505 and either ANSI/UL 583 or ANSI/UL 558?

Reply: Section 7.2.1(d) of ASME/ANSI B56.8-1988 requires that conformance to a specific type designation (i.e., Type D, E, G, LP, DS, DY, ES, EE, EX, GS, or LPS) be shown on the name plate. Conformance is required by various government agencies and insurance companies.

Copyright ASME International
Provided by IHS under license with ASME
No reproduction or networking permitted without license from IHS
Not for Resale

Previous page is blank.

Interpretation: 8-3

Subject: ASME/ANSI B56.8-1988

Date Issued: September 19, 1991

Question (1): With regard to Section 7.2.1(a) of B56.8, would welding of a stamped number plate on all edges to the main frame be considered the same as stamped on the main frame of the carrier?

Reply (1): No. The purpose of stamping on the main frame of the carrier is to provide permanent, lifetime identification. This benefits and protects not only the manufacturer, but also the user. Metal data plates, even though secured by welding, could still conceivably be removed and therefore would not meet the intended purpose of the requirement.

Question (2): With regard to Section 7.2.4 of B56.8, would attaching of a data plate in the same area be sufficient to satisfy this requirement which reads "... shall be legibly stamped on the battery tray near the lifting means ..."?

Reply (2): No. See Reply (1).

Interpretation: 8-4

Subject: ASME/ANSI B56.8-1988

Date Issued: March 17, 1992

Question (1): With regard to para. 7.3.9(a)(5), where should the center of gravity of the test weight be located on a vehicle that uses a stand up operator?

Reply (1): Section 7.3.9(a)(5) of ASME/ANSI B56.8-1988 addresses sit-down carriers. Currently, there is no parallel provision for stand-up units. Therefore, the Committee cannot provide an interpretation of something that does not appear in the Standard.

Consideration of the addition of a parallel provision for stand-up units will be on the agenda for the next meeting of the B56.8 Subcommittee.

Question (2): Do special braking requirements exist in B56.8 for towing?

Reply (2): B56.8 addresses requirements for personnel and burden carriers only. If the intended use of a vehicle is other than for the transportation of personnel and/or burden, the standard appropriate to the use should be followed.

Copyright ASME International
Provided by IHS under license with ASME
No reproduction or networking permitted without license from IHS
Not for Resale

AMERICAN NATIONAL STANDARDS ON MATERIAL HANDLING EQUIPMENT

Safety Code for Elevators and Escalators A17.1-1990
Safety Standard for Conveyors and Related Equipment B20.1-1993
Safety Standard for Low Lift and High Lift Trucks B56.1-1988
Safety Standard for Guided Industrial Vehicles and Automated Functions of Manned Industrial Vehicles B56.5-1993
Safety Standard for Rough Terrain Forklift Trucks B56.6-1992
Safety Standard for Industrial Crane Trucks ..... B56.7-1987(R1992)
Safety Standard for Personnel and Burden Carriers B56.8-1993
Safety Standard for Operator Controlled Industrial Tow Tractors B56.9-1991
Safety Standard for Manually Propelled High Lift Industrial Trucks B56.10-1992
Double Race or Bi-Level Swivel and Rigid Industrial Casters B56.11.1-1991
Load Handling Symbols for Powered Industrial Trucks B56.11.3-1992
Hook-Type Forks and Fork Carriers for Powered Industrial Forklift Trucks B56.11.4-1992
Measurement of Sound Emitted by Low Lift, High Lift, and Rough Terrain Powered Industrial Trucks B56.11.5-1992
Evaluation of Visibility From Powered Industrial Trucks B56.11.6-1992
Definitions and Terminology Covering Pallets and Related Structures MH1.1.2-1989
Pallet Sizes MH1.2.2M-1989
Specifications for Identification and Marking of Cargo Containers MH5.3M-1982

The ASME Publications Catalog shows a complete list of all the Standards published by the Society. For a complimentary catalog, or the latest information about our publications, call 1-800-THE-ASME (1-800-843-2763).

Copyright ASME International
Provided by IHS under license with ASME
No reproduction or networking permitted without license from IHS
Not for Resale

STD.ASME B56.8-ENGL 1993 ■ 0759670 0620552 18T ■

ISBN #0-7918-2237-0



Copyright ASME International
Provided by IHS under license with ASME
No reproduction or networking permitted without license from IHS
Not for Resale