Errata
to
ASME B56.6-2002
Safety Standard
for Rough Terrain Forklift Trucks

The errata corrections listed below apply to ASME B56.6-2002.

Page	*Location*	*Change*
iv	Foreword	Correct by adding a new sixth paragraph to read: This standard shall become effective 1 year after the date of issuance. Part III applies only to trucks manufactured after the effective date.
5	5.2.6	Correct to read: Where steering must be accomplished with either hand and the steering mechanism is of a type that prevents road reactions from causing the handwheel to spin (power steering or equivalent), steering knobs may be used. When used, steering knobs shall be of a type that can be engaged by the operator's hand from the top, and shall be within the periphery of the steering handwheel.
9	6.2.8	Correct the last line of the first paragraph to read: para. 8.26.

THE AMERICAN SOCIETY OF MECHANICAL ENGINEERS
Three Park Avenue, New York, NY 10016-5990

March 2003

J5602E

Copyright ASME International
Provided by IHS under license with ASME
No reproduction or networking permitted without license from IHS

Not for Resale

The American Society of Mechanical Engineers

SAFETY STANDARD FOR ROUGH TERRAIN FORKLIFT TRUCKS

AN AMERICAN NATIONAL STANDARD

ASME B56.6-2002

(Revision of ASME B56.6-1992)

Copyright ASME International
Provided by IHS under license with ASME
No reproduction or networking permitted without license from IHS

Not for Resale

The American Society of Mechanical Engineers

AN AMERICAN NATIONAL STANDARD

SAFETY STANDARD FOR ROUGH TERRAIN FORKLIFT TRUCKS

ASME B56.6-2002

(Revision of ASME B56.6-1992)

POWERED AND NONPOWERED INDUSTRIAL TRUCKS

Copyright ASME International
Provided by IHS under license with ASME
No reproduction or networking permitted without license from IHS

Not for Resale

Date of Issuance: August 30, 2002

The next edition of this Standard is scheduled for publication in 2005. There will be no addenda or written interpretations of the requirements of this Standard issued to this edition.

ASME is the registered trademark of The American Society of Mechanical Engineers.

This code or standard was developed under procedures accredited as meeting the criteria for American National Standards. The Standards Committee that approved the code or standard was balanced to assure that individuals from competent and concerned interests have had an opportunity to participate. The proposed code or standard was made available for public review and comment that provides an opportunity for additional public input from industry, academia, regulatory agencies, and the public-at-large.

ASME does not "approve," "rate," or "endorse" any item, construction, proprietary device, or activity.

ASME does not take any position with respect to the validity of any patent rights asserted in connection with any items mentioned in this document, and does not undertake to insure anyone utilizing a standard against liability for infringement of any applicable letters patent, nor assume any such liability. Users of a code or standard are expressly advised that determination of the validity of any such patent rights, and the risk of infringement of such rights, is entirely their own responsibility.

Participation by federal agency representative(s) or person(s) affiliated with industry is not to be interpreted as government or industry endorsement of this code.

ASME accepts responsibility for only those interpretations of this document issued in accordance with the established ASME procedures and policies, which precludes the issuance of interpretations by individuals.

No part of this document may be reproduced in any form,
in an electronic retrieval system or otherwise,
without the prior written permission of the publisher.

The American Society of Mechanical Engineers
Three Park Avenue, New York, NY 10016-5990

Copyright © 2002 by
THE AMERICAN SOCIETY OF MECHANICAL ENGINEERS
All Rights Reserved
Printed in U.S.A.

Copyright ASME International
Provided by IHS under license with ASME
No reproduction or networking permitted without license from IHS

Not for Resale

CONTENTS

Foreword iv
Committee Roster v
Summary of Changes vi
General 1

Part I Introduction
1 Scope 3
2 Definition 3
3 Purpose 3
4 Interpretation 3

Part II For the User 5
5 General Safety Practices 5
6 Operating Safety Rules and Practices 9
7 Maintenance and Rebuild Practices 12

Part III For the Manufacturer 15
8 Design and Construction Standards 15

Figures
1 Lifting Capacity for Center of Gravity of 48 in. Cube — Without Manually Operated Stabilizers 17
2 Lifting Capacity for Center of Gravity of 1200 mm Cube — Without Manually Operated Stabilizers 18
3 Longitudinal Stability — Stacking 22
4 Longitudinal Stability — Traveling 23
5 Lateral Stability — Stacking — Loaded 24
6 Lateral Stability — Traveling 25
7 Typical Fork 30
8 Overhead Guard Cube Drop Deformation Limit 31
9 Overhead Guard Impact Test Method 32
10 Overhead Guard Impact Deformation Limit 32

Tables
1 Tests for Stability 20
2 Load Handling Controls 28
3 Overhead Guard Impact Test Load 31

Mandatory Appendix
I References 35

Nonmandatory Appendix
A Glossary of Commonly Used Words and Phrases 36

Copyright ASME International
Provided by IHS under license with ASME
No reproduction or networking permitted without license from IHS
Not for Resale

FOREWORD

In response to requests from manufacturers and users, the B56 Committee established the B56.6 Subcommittee to create this Standard. The first Subcommittee meeting was held December 5, 1974.

Six Subcommittee meetings were held for preparation of the standard, and a proposed standard dated March 25, 1976 was presented to Sectional Committee members for study. The first edition of the standard was approved and published in 1978 as an American National Standard.

In August 1982, the B56.6 Subcommittee began working on a revision to the 1978 standard. The revised standard was subsequently approved by the B56 Committee and the sponsor. The American National Standards Institute approved the standard on January 23, 1987.

Following approval by the B56 Committee and ASME, and after public review, ASME B56.6-1992 was approved by ANSI on December 15, 1992.

The 2002 Edition incorporates changes made in the B56.6a-1994 and B56.6b-1998 supplements, as well as additional revisions. It was approved for issuance as an American National Standard on April 9, 2002.

Safety codes and standards are intended to enhance public health and safety. Revisions result from Committee consideration of factors such as technological advances, new data, and changing environmental and industry needs. Revisions do not imply that previous editions were inadequate.

Copyright ASME International
Provided by IHS under license with ASME
No reproduction or networking permitted without license from IHS
Not for Resale

ASME STANDARDS COMMITTEE B56
Powered and Nonpowered Industrial Trucks

(The following is the roster of the Committee at the time of approval of this Standard.)

OFFICERS

R. N. Rogers, *Chair*
G. H. Ritterbusch, *Vice Chair*
R. Mohamed, *Secretary*

COMMITTEE PERSONNEL

L. R. Berke, Safety Solutions of Minnesota
L. J. Churches, Churches & Associates, Inc.
J. N. Eavenson, Commercial Turf Product Ltd.
R. C. Fuller, Consulting Engineer
D. M. Graham, Ford Motor Co.
D. A. Greer, GTE World Operations
E. B. Gutta, Consulting Engineer
D. E. Hupp, Alcoa, Inc.
J. E. Johnson, Johnson Engineering Services, Inc.
R. A. Klebes, Universal Health Services
D. T. Labelle, Consultant
R. R. Lasecki, Consulting Engineer
W. J. Montwieler, The Industrial Truck Association
E. J. Ramsey, Major Equipment Co., Inc.
G. H. Ritterbusch, *Caterpillar, Inc.*
R. N. Rogers, Consultant
K. S. Sanders, East Penn Manufacturing Co., Inc.
S. J. Simpson, Simpson Machine Corp.
F. E. Steinberger, General Motors Corp.

SUBCOMMITTEE B56.6 — ROUGH TERRAIN FORKLIFT TRUCKS

E. J. Ramsey, *Chair,* Major Equipment Co., Inc.
R. Mohamed, *Secretary,* The American Society of Mechanical Engineers
J. S. Bargenquast, The Gradall Co.
C. A. Barnes, Consulting Engineer
G. E. Collins, Caterpillar, Inc.
R. C. Friedemann, Robert C. Friedemann & Associates
R. T. Jarrett, J. I. Case Co.
J. E. Johnson, Consulting Engineer
J. Kipfer, Carelift Equipment Manufacturing
D. J. Krawchuk, U.S. Army Tardec
S. A. Mercier, The Gradall Co.
W. J. Montwieler, *The Industrial Truck Association*
C. J. Palumbo, Terex Princeton
R. R. Shinn, Eagle Pitcher Industries, Inc.
S. J. Simpson, Simpson Machine Corp.
E. W. Sprang, International Association of Machinists and Aerospace Workers
G. W. Meyer, *Alternate,* International Association of Machinists and Aerospace Workers

Copyright ASME International
Provided by IHS under license with ASME
No reproduction or networking permitted without license from IHS
Not for Resale

ASME B56.6-2002
SUMMARY OF CHANGES

The 2002 edition of ASME B56.6 includes editorial changes, revisions, and corrections introduced in B56.6a-1994 and B56.6b-1998, as well as the following changes identified by **(02)**.

Page	*Location*	*Change*
5	5.2	(1) Paragraph 5.2.1 revised (2) New para. 5.2.2 added (3) Paragraphs 5.2.2 through 5.2.5 redesignated as 5.2.3 through 5.2.6, respectively
9	6.2.8	Revised in its entirety
15, 16	8.5.2	Revised in its entirety
	8.5.6	(1) Deleted (2) Paragraph 8.5.7 revised and redesignated as 8.5.6
26, 27	8.7.7	Revised in its entirety
	8.7.8	Revised in its entirety
33	8.26	Added
35	Mandatory Appendix I	Updated

SPECIAL NOTE

The interpretations to ASME B56.6 are included in this edition as a separate section for the user's convenience. The interpretations are not part of this edition or of the standard itself.

Copyright ASME International
Provided by IHS under license with ASME
No reproduction or networking permitted without license from IHS
Not for Resale

POWERED AND NONPOWERED INDUSTRIAL TRUCKS

General

This Standard is one of a series that have been formulated with the American Society of Mechanical Engineers as Sponsor in accordance with the Accredited Organization method, the procedures accredited by the American National Standards Institute, Inc., and the following scope.

> Establishment of the safety requirements relating to the elements of design, operation, and maintenance; standardization relating to principal dimensions to facilitate interchangeability, test methods, and test procedures of powered and nonpowered industrial trucks (not including vehicles intended primarily for earth moving or over-the-road hauling); and maintenance of liaison with the International Organization for Standardization (ISO) in all matters pertaining to powered and nonpowered industrial trucks.

One purpose of the Standard is to serve as a guide to governmental authorities having jurisdiction over subjects within the scope of the Standard. It is expected, however, that the Standard will find a major application in industry, serving as a guide to manufacturers, purchasers, and users of the equipment.

For convenience, Standards for Powered and Nonpowered Industrial Trucks has been divided into separate volumes:

Safety Standards

B56.1	Low Lift and High Lift Trucks
B56.5	Guided Industrial Vehicles and Automated Functions of Manned Industrial Vehicles
B56.6	Rough Terrain Forklift Trucks
B56.7	Industrial Crane Trucks
B56.8	Personnel and Burden Carriers
B56.9	Operator Controlled Industrial Tow Trucks
B56.10	Manually Propelled High Lift Industrial Trucks

Standardization Standards

B56.11.1	Double Race or Bi-Level Swivel and Rigid Industrial Casters
B56.11.3	Load Handling Symbols for Powered Industrial Trucks
B56.11.4	Hook-Type Forks and Fork Carriers for Powered Industrial Forklift Trucks
B56.11.5	Measurement of Sound Emitted by Low Lift, High Lift, and Rough Terrain Powered Industrial Trucks
B56.11.6	Evaluation of Visibility From Powered Industrial Trucks
B56.11.7	Liquefied Petroleum Gas (LPG) Fuel Cylinders (Horizontal or Vertical) Mounting — Liquid Withdrawal — for Powered Industrial Trucks

Safety standards that were previously listed as B56 volumes but now have different identification due to a change in standards development assignments are as follows.

NFPA 505	Fire Safety Standard for Powered Industrial Trucks — Type Designations, Areas of Use, Maintenance and Operation (formerly B56.2)
UL 583	Standard for Safety for Electric-Battery-Powered Industrial Trucks (formerly B56.3)
UL 558	Standard for Safety for Internal Combustion Engine-Powered Industrial Trucks (formerly B56.4)

If adopted for governmental use, the references to other national codes and standards in the specific volumes may be changed to refer to the corresponding governmental regulations.

The use of powered and nonpowered industrial trucks is subject to certain hazards that cannot be completely eliminated by mechanical means, but the risks can be minimized by the exercise of intelligence, care, and common sense. It is therefore essential to have competent and careful operators, physically and mentally fit, and thoroughly trained in the safe operation of the equipment and the handling of the loads. Serious hazards are overloading, instability of the load, obstruction to the free passage of the load, collision with objects or pedestrians, poor maintenance, and use of equipment for a purpose for which it was not intended or designed.

Copyright ASME International
Provided by IHS under license with ASME
No reproduction or networking permitted without license from IHS
Not for Resale

Suggestions for improvement of these Standards, especially those based on actual experience in their application, shall be submitted to the Secretary of the B56 Committee, ASME International, Three Park Avenue, New York, NY 10016-5990.

Comments shall be writen in accordance with the following format:

(a) specify paragraph designation of the pertinent volume;

(b) indicate suggested change (addition, deletion, revision, etc.);

(c) briefly state reason and/or evidence for suggested change;

(d) submit suggested changes to more than one paragraph in the order in which they appear in the volume.

The appropriate B56 Subcommittee will consider each suggested revision at its first meeting after receipt of the suggested revision(s).

Copyright ASME International
Provided by IHS under license with ASME
No reproduction or networking permitted without license from IHS
Not for Resale

SAFETY STANDARD FOR ROUGH TERRAIN FORKLIFT TRUCKS

PART I
INTRODUCTION

1 SCOPE

This Standard defines the safety requirements relating to the elements of design, operation, and maintenance of rough terrain forklift trucks. These trucks are intended for operation on unimproved natural terrain as well as the disturbed terrain of construction sites.

2 DEFINITION

A *rough terrain forklift truck* is defined as a wheeled-type truck designed primarily as a fork truck with a vertical mast and/or a pivoted boom, variable reach or of fixed length, which may be equipped with attachments. This truck is intended for operation on unimproved natural terrain as well as the disturbed terrain of construction sites. This definition excludes machines designed primarily for earth moving, such as loaders and dozers, even though their buckets and blades are replaced with forks, and machines designed primarily as over-the-road trucks equipped with lifting devices.

3 PURPOSE

The purpose of this Standard is to promote safety through the design, construction, application, operation, and maintenance of rough terain forklift trucks. This Standard may be used as a guide by governmental authorities desiring to formulate safety rules and regulations. This Standard is also intended for voluntary use by others associated with manufacture or utilizing rough terrain forklift trucks.

4 INTERPRETATION

4.1 Mandatory and Advisory Rules

To carry out the provisions of this Standard, all items in Parts II and III are mandatory except those including the word *should*, which are recommendations.

4.2 Classification of Approved Rough Terrain Forklift Trucks

The word *approved* means the classification or listing of rough terrain forklift trucks as to fire, explosion, and/or electric shock hazard by a nationally recognized testing laboratory, i.e., a laboratory qualified and equipped to conduct examinations and tests such as those prescribed by Underwriters Laboratories, Inc.

4.3 Terminology

For terminology not included in Nonmandatory Appendix A, refer to ANSI Z94.0.

4.4 Requests for Interpretation

The B56 Committee will render an interpretation of any requirement of this Standard. Interpretations will be rendered only in response to a written request sent to the Secretary of the B56 Committee, ASME International, Three Park Avenue, New York, NY 10016-5990. The request for interpretation shall be in the following format.

Subject: Cite the applicable paragraph number(s) and provide a concise description.

Edition: Cite the applicable edition of the pertinent standard for which the interpretation is being requested.

Question: Phrase the question as a request for an interpretation of a specific requirement suitable for general understanding and use, not as a request for approval of a proprietary design or situation. The inquirer may also include any plans or drawings that are necessary to explain the question; however, they should not contain proprietary names or information.

Copyright ASME International
Provided by IHS under license with ASME
No reproduction or networking permitted without license from IHS
Not for Resale

ASME procedures provide for reconsideration of any interpretation when or if additional information that might affect an interpretation is available. Further, persons aggrieved by an interpretation may appeal to the cognizant ASME Committee or Subcommittee. ASME does not "approve," "certify," "rate," or "endorse" any item, construction, proprietary device or activity.

4.5 Metric Conversions

The values stated in metric units are to be regarded as the standard.

Copyright ASME International
Provided by IHS under license with ASME
No reproduction or networking permitted without license from IHS
Not for Resale

PART II
FOR THE USER

5 GENERAL SAFETY PRACTICES

5.1 Introduction

5.1.1 Rough terrain forklift trucks can cause injury if improperly used or maintained.

5.1.2 Part II contains broad safety standards applicable to rough terrain forklift truck operations. Only authorized operators trained to adhere strictly to the operating instructions stated in Section 6 shall be permitted to operate rough terrain forklift trucks. Unusual operating conditions may require additional safety precautions and special operating instructions.

(02) 5.2 Modifications, Nameplates, Markings, and Capacity

5.2.1 Except as provided in 5.2.2, no modifications or alterations to a rough terrain forklift truck, which may affect the capacity, stability, or safe operations of the truck, shall be made without the prior written approval of the original truck manufacturer or its successor thereof. When the truck manufacturer or its successor approve a modification or alteration, appropriate changes shall be made to capacity plates, decals, tags, and operation and maintenance manuals.

5.2.2 In the event that the truck manufacturer is no longer in business and there is no successor in interest to the business, the user may arrange for a modification or alteration to a rough terrain forklift truck, provided however, the user shall:

(a) arrange for modification or alteration to be designed, tested, and implemented by an engineer(s) expert in rough terrain forklift trucks and their safety;

(b) maintain a permanent record of the design, test(s), and implementation of the modification or alteration;

(c) make appropriate changes to the capacity plate(s), decals, tags, and operation and maintenance manuals;

(d) affix a permanent and readily visible label on the truck stating the manner in which the truck has been modified or altered together with the date of the modification or alteration, and the name of the organization that accomplished the tasks.

5.2.3 If the rough terrain forklift truck is equipped with front end attachment(s) or optional forks, the user shall see that the truck is marked to identify the forks or attachment(s), show the approximate weight of the truck and fork or attachment combination, and show the capacity of the truck with forks or attachment(s) at maximum elevation with load laterally centered.

5.2.4 The user shall see that all nameplates and caution and instruction markings are in place and legible.

5.2.5 The user shall consider that changes in load dimension may affect rough terrain forklift truck capacity.

5.2.6 Where steering must be accomplished with either hand and the steering mechanism is of a type that prevents road reactions from causing the handwheel to spin of a type that can be engaged by the operator's hand from the top, and shall be within the periphery of the steering handwheel.

5.3 Stability

5.3.1 Experience has shown that rough terrain forklift trucks that comply with the stability requirements stated in para. 8.6 are stable when properly operated. However, improper operation, faulty maintenance, or poor housekeeping may contribute to a condition of instability and defeat the purpose of the Standard.

5.3.2 Some of the conditions that may affect stability are ground and floor conditions, grade, speed, loading (rough terrain forklift trucks equipped with attachments behave as partially loaded trucks even when operated without a load on the attachment), dynamic and static forces, improper tire inflation, and the judgment exercised by the operator.

5.3.3 Users shall give consideration to special operating conditions. The amount of forward and rearward tilt to be used is governed by the application. Although

Copyright ASME International
Provided by IHS under license with ASME
No reproduction or networking permitted without license from IHS
Not for Resale

the use of maximum rearward tilt is allowable under certain conditions, such as traveling with the load lowered, the stability of a rough terrain forklift truck as determined by the tests outlined in para. 8.6 does not encompass consideration for excessive tilt at high elevations or the operation of trucks with excessive off-center loads.

5.3.4 Some users may decide to establish, for their own use, stability requirements that will vary from those in para. 8.6. However, the requirements in para. 8.6 should serve as a guide for the user, working with the manufacturer, in establishing his own more stringent requirements.

5.4 Safety Guards

5.4.1 Overhead Guards

5.4.1.1 Rough terrain forklift trucks shall be fitted with an overhead guard manufactured in accordance with para. 8.16.

5.4.1.2 An overhead guard is intended to offer protection to the operator from falling objects, but it cannot protect against every possible impact. Therefore, the overhead guard should not be considered a substitute for good judgment and care in loading, handling, storage, etc.

5.4.1.3 Under certain unusual operating conditions, a stronger guard, or one having openings of smaller size, may be specified by the user, working with the rough terrain forklift truck manufacturer.

5.4.2 Load Backrest Extension. A load backrest extension shall be used when necessary to guard against a load, or part of it, falling toward the operator.

5.5 Fuel Handling and Storage

5.5.1 The storage and handling of liquid fuels (such as gasoline and diesel fuel) shall be in accordance with ANSI/NFPA 505 and ANSI/NFPA 30.

5.5.2 The storage and handling of liquefied petroleum gas fuel shall be in accordance with ANSI/NFPA 505 and ANSI/NFPA 58.

5.6 Hazardous Locations

5.6.1 It shall be the responsibility of the user to determine the hazard classification of any particular atmosphere or location according to ANSI/NFPA 505.

5.6.2 Rough terrain forklift trucks operated in hazardous areas shall be approved and of the type required by ANSI/NFPA 505.

5.6.2.1 Depending on the proposed type of rough terrain forklift truck and area, approved trucks shall be built in compliance with UL 558.

5.6.2.2 Rough terrain forklift trucks and areas of use shall be marked in accordance with ANSI/NFPA 505.

5.7 Aisles and Obstructions

5.7.1 Permanent aisles, roadways or passageways, floors, and ramps shall be defined in some fashion or marked to conform with ANSI Z53.1.

5.7.2 Permanent or temporary protrusions of loads, equipment, and material into the usual operating area shall be guarded, clearly and distinctively marked, or clearly visible.

5.8 Lighting for Operating Areas

5.8.1 Controlled lighting of adequate intensity should be provided in operating areas in conformance with ANSI/IES RP7.

5.8.2 Where operating conditions indicate, the user shall be responsible for having the rough terrain forklift truck equipped with lights.

5.9 Control of Noxious Gases and Fumes

5.9.1 Internal combustion engines deplete the oxygen supply within enclosed spaces and may create a hazard unless the oxygen is replaced.

5.9.1.1 Ventilation shall be provided in enclosed areas where internal combustion powered equipment is used, to maintain an atmosphere that shall not exceed the contamination levels specified by the American Conference of Governmental Industrial Hygienists "Threshold Limit Values of Airborne Contaminants." This includes the atmosphere within the rough terrain forklift truck cab when a cab is provided.

5.9.1.2 Questions concerning degree of concentration and methods of sampling to ascertain the conditions should be referred to a qualified person.

Copyright ASME International
Provided by IHS under license with ASME
No reproduction or networking permitted without license from IHS
Not for Resale

5.10 Sound Level

Rough terrain forklift trucks can contribute to the ambient sound level in the work area. Consideration should be given to the sound exposure of personnel in the work area.

5.11 Dockboards (Bridge Plates)

5.11.1 Portable and powered dockboards shall be marked conspicuously with their carrying capacity. The carrying capacity indicated shall not be exceeded.

5.11.2 Portable dockboards shall be secured in position to prevent their slipping.

5.11.3 Handholds or other effective means shall be provided on portable dockboards to permit safe handling. Where possible, fork loops or lugs shall be provided for handling by rough terrain forklift trucks.

5.11.4 All types of dockboards shall have a high friction surface designed to reduce the possibility of employees or rough terrain forklift trucks slipping.

5.11.5 All types of dockboards shall be designed and maintained so that the end edges will have a substantial contact with the dock (or loading platform) and the transport vehicle to prevent the dockboard from rocking or sliding.

5.12 Rough Terrain Forklift Trucks and Railroad Cars

5.12.1 When rough terrain forklift trucks are driven on and off road trucks or trailers during the loading and unloading operation, the brakes on the road trucks and trailers shall be applied and wheel chock(s), or positive mechanical restraints which provide the equivalent protection of wheel chocks, shall be engaged.

5.12.2 Provision shall be made to prevent railroad cars from being moved during loading and unloading. Wheel stops, hand brakes, or other recognized positive means shall be used to prevent movement during loading and unloading.

5.12.3 Whenever rough terrain forklift trucks are driven on and off semitrailers not coupled to a tractor, supports may be needed to prevent upending or corner dipping.

5.12.4 Maintain a safe distance from the edge of ramps, platforms, or other similar working surfaces.

5.12.5 Do not move railroad cars or trailers with a rough terrain forklift truck unless the truck is properly designed and equipped for that operation.

5.13 Warning Device

5.13.1 Every rough terrain forklift truck shall be equipped with an operator-controlled horn, whistle, gong, or other sound-producing device(s). The user shall see that all warning devices are in place and in working order.

5.13.2 The user shall determine if operating conditions require the rough terrain forklift truck to be equipped with additional sound-producing or visual devices, and be responsible for providing and maintaining such devices.

5.14 Relocating Rough Terrain Forklift Trucks

When utilizing lifting equipment such as elevators, cranes, ship hoisting gear, etc., to relocate a rough terrain forklift truck, the user shall ensure that the capacity of the hoisting equipment being used is not exceeded.

5.15 Elevating Personnel

5.15.1 A rough terrain forklift truck shall not be used to lift people unless there is no other practical option. If a rough terrain forklift truck must be used to lift people, the following precautions for the protection of personnel shall be taken:

(a) provide a personnel platform which complies with the design requirements listed in Part III of this Standard;

(b) be certain that the platform is securely attached to the lifting carriage and forks;

(c) be certain that the lifting carriage and forks are secured to prevent them from pivoting upward;

(d) on trucks equipped with rotators, deactivate the rotation;

(e) provide protection for personnel in their normal working position on the platform from moving parts of the rough terrain forklift truck that represents a hazard;

(f) provide overhead protection as indicated to be necessary by the operating conditions;

(g) be certain that the lifting mechanism is operating smoothly throughout its entire lift range, both empty

Copyright ASME International
Provided by IHS under license with ASME
No reproduction or networking permitted without license from IHS
Not for Resale

and loaded [as described in para. 5.15.1(t)], and that all lift limiting devices and latches, if provided, are functional;

(h) be certain that the mast or boom travel is vertical — do not operate on a side slope unless the rough terrain forklift truck is leveled;

(i) be certain that the platform is horizontal and never tilt platform forward or rearward when elevated;

(j) be certain that the rough terrain forklift truck has a firm footing;

(k) be certain that required straining means such as railings, chains, cable, body belt(s) with lanyard(s), etc., are in place and properly used;

(l) place rough terrain forklift truck control(s) in neutral and set parking brake;

(m) before elevating personnel, area shall be marked to warn of work by elevated personnel;

(n) be certain that the path of platform travel is clear of hazards, e.g., storage racks, scaffolds, overhead obstructions, and electrical wires;

(o) keep hands and feet clear of controls other than those in use;

(p) lift and lower personnel smoothly, with caution, and only at their request;

(q) always lower the platform if you must move the rough terrain forklift truck for adjustments in positioning;

(r) alert elevated personnel before moving the platform. Then move the platform smoothly and with caution.

(s) a trained operator shall be in position to control the rough terrain forklift truck, or available to operate controls if the platform is not equipped with controls. When the operator is not in the operating position, block the truck wheels and apply the parking brake with all travel controls in neutral.

(t) the combined mass (weight) of the platform, load, and personnel shall not exceed one-third of the capacity at the related load center position as indicated on the information plate(s) of the rough terrain forklift truck on which the platform is used;

(u) personnel are to maintain firm footing on platform floor unless secured by body belt and lanyard. Use of railings, planks, ladders, etc., on the platform for purpose of achieving additional reach or height is prohibited;

(v) be certain that personnel and equipment on the platform do not exceed the available space;

(w) platform shall be lowered to floor level for personnel to enter and exit. Personnel shall not climb on any part of the rough terrain forklift truck in attempting to enter and exit.

(x) any body belt, lanyard, or deceleration device which has sustained permanent deformation or is otherwise damaged shall be replaced;

(y) prohibit modification to the platform that is detrimental to its safe use.

5.16 Operator Qualifications

5.16.1 Only trained and authorized persons shall be permitted to operate a rough terrain forklift truck. Operators of rough terrain forklift trucks shall be qualified as to visual, auditory, physical, and mental ability to operate the equipment safely according to para. 5.17 and all other applicable parts of Section 5.

5.17 Operator Training

5.17.1 The user shall ensure that operators understand that the safe operation is the operator's responsibility. The user shall ensure that operators are knowledgeable of, and observe, the safety rules and practices in paras. 6.1, 6.2, 6.3, 6.4, and 6.5.

5.17.2 An effective operator training program should center around user company's policies, operating conditions, and rough terrain forklift trucks. The program should be presented completely to all new operators and not be condensed for those claiming previous experience.

5.17.3 Information on operator training is available from several sources, including rough terrain forklift truck manufacturers, users, government agencies, etc.

5.17.4 An operator training program should consist of:

(a) careful selection of the operator, considering physical qualifications, job attitude, and aptitude;

(b) emphasis on safety of stock, equipment, operator, and other personnel;

(c) citing of rules and whey they were formulated;

(d) basic fundamentals of rough terrain forklift truck and component design as related to safety, e.g., in.-lb (N · m) loading, mechanical limitations, center of gravity, stability, etc.;

(e) introduction to equipment, control locations, and functions. Explain how they work when used properly and problems when used improperly.

(f) supervised practice on operating course remote from normal activity and designed to simulate actual operations, e.g., lumber stacking, elevating shingles to the roof, etc.;

Copyright ASME International
Provided by IHS under license with ASME
No reproduction or networking permitted without license from IHS
Not for Resale

(g) oral, written, and operational performance tests and evaluations during and at completion of the course;

(h) refresher courses, which may be condensed versions of the primary course, and periodic, "on job" operator evaluation;

(i) understanding of nameplate data and operator instructions and warning information appearing on the rough terrain forklift truck.

6 OPERATING SAFETY RULES AND PRACTICES

6.1 Operator Responsibility

6.1.1 Safe operation is the responsibility of the operator.

6.1.2 The equipment can be dangerous if not used properly. The operator shall develop safe working habits and also be aware of hazardous conditions in order to protect himself, other personnel, the rough terrain forklift truck, and other material.

6.1.3 The operator shall be familiar with the operation and function of all controls and instruments before undertaking to operate the rough terrain forklift truck.

6.1.4 Before operating any rough terrain forklift truck, truck operators shall have read and be familiar with the operator's manual for the particular truck being operated; they shall also abide by the safety rules and practices in paras. 6.1, 6.2, 6.3, 6.4, and 6.5.

6.2 General

6.2.1 Before starting to operate the rough terrain forklift truck:

(a) be in operating position and fasten seat belt, if so equipped;

(b) place directional controls in neutral;

(c) disengage clutch on manual transmission-equipped rough terrain forklift trucks, or apply brake on power shift or automatic transmission-equipped trucks;

(d) start engine.

6.2.2 Do not start or operate the rough terrain forklift truck, any of its functions or attachments, from any place other than from the designated operator's position.

6.2.3 Keep hands and feet inside the operator's designated area or compartment. Do not put any part of the body outside the operator compartment of the rough terrain forklift truck.

6.2.4 Never put any part of the body into the mast structure or between the mast and the rough terrain forklift truck.

6.2.5 Never put any part of the body within the reach mechanism of the rough terrain forklift truck or other attachments.

6.2.6 Understand rough terrain forklift truck limitations and operate the truck in a safe manner so as not to cause injury to personnel.

Safeguard pedestrians at all times. Do not drive a rough terrain forklift truck up to anyone standing in front of an object. Exercise particular care during backing and other operations where pedestrians may step into the path of travel of the truck.

6.2.7 Do not allow anyone to stand or pass under the elevated portion of any rough terrain forklift truck, whether empty or loaded.

6.2.8 Do not permit passengers to ride on rough terrain forklift trucks unless a safe place has been provided by the manufacturer that complies with para. 8.27. **(02)**

The passenger shall:

(a) remain seated at all times except when entering and exiting;

(b) fasten the seat belt;

(c) keep all parts of the body, including hands and feet, inside the passenger compartment;

(d) keep clear of, and make no contact with, the operating controls of the rough terrain forklift truck.

The operator shall only operate the rough terrain forklift truck in a manner that ensures the passenger's safety.

6.2.9 Check clearance carefully before driving under electrical lines, bridges, etc.

6.2.10 A rough terrain forklift truck is attended when the operator is less than 25 ft (7.6 mm) from the truck, which remains in his view.

6.2.11 A rough terrain forklift truck is unattended when the operator is 25 ft (7.6 mm) or more from the truck, which remains in his view, or whenever the operator leaves the truck and it is not in his view.

6.2.12 Before leaving the operator's position:

(a) bring rough terrain forklift truck to a complete stop;

(b) place directional controls in neutral;

(c) apply the parking brake;

Copyright ASME International
Provided by IHS under license with ASME
No reproduction or networking permitted without license from IHS
Not for Resale

(d) lower load-engaging means fully, unless supporting an elevated platform;

In addition, when leaving the rough terrain forklift truck unattended:

(e) stop the engine;

(f) if the rough terrain forklift truck must be left on an incline, block the wheels;

(g) fully lower the load-engaging means.

6.2.13 Maintain a safe distance from the edge of ramps, platforms, and other similar working surfaces.

6.2.14 Do not move railroad cars or trailers with a rough terrain forklift truck unless the truck is properly designed and equipped for that operation.

6.2.15 Do not use a rough terrain forklift truck for opening or closing railroad car doors, unless the truck utilizes a device specifically designed for opening and closing railroad car doors and the operator is trained in its use.

The design of the door-opening device shall require the rough terrain forklift truck to travel parallel to the railroad car, with the force applied in a direction parallel with the door travel. Care should be exercised when engaging the door-opening device with the railroad car door in order to prevent damage to the doors and/or the rough terrain forklift truck by heavy impact forces. The entire door opening operation shall be in full view of the operator. The rough terrain forklift truck shall always be positioned to safeguard the dock attendant while removing the door lock pin. Whenever a railroad car door requires an abnormal force to open, the truck operator shall report the condition to his supervisor or as instructed.

6.2.16 In areas classified as hazardous, use only rough terrain forklift trucks approved for use in those areas.

6.2.17 Report all accidents involving personnel, building structures, and equipment to the supervisor or as directed.

6.2.18 Do not add to, or modify, the rough terrain forklift truck.

6.2.19 Do not block access to fire aisles, stairways, or fire equipment.

6.3 Traveling

6.3.1 On rough terrain forklift trucks equipped with individual wheel brake pedals, lock pedals together for simultaneous operation before travel on public roads or when changing job sites.

6.3.2 For rough terrain forklift trucks equipped with a differential lock, the lock should not be engaged when driving on the road or at high speeds or when turning. If the lock is engaged when turning, there could be loss of steering control.

6.3.3 Observe all traffic regulations including authorized speed limits. Under normal traffic conditions, keep to the right. Maintain a safe distance, based on speed of travel, from the truck ahead; and keep the truck under control at all times.

6.3.4 Yield the right of way to pedestrians and emergency vehicles such as ambulances and fire trucks.

6.3.5 Do not pass another truck traveling in the same direction at intersections, blind spots, or at other dangerous locations.

6.3.6 Slow down and sound the audible warning device(s) at cross aisles and other locations where vision is obstructed.

6.3.7 Cross railroad tracks at an angle wherever possible. Do not park closer than 6 ft (1.8 m) to the nearest rail of a railroad track.

6.3.8 Keep a clear view of the path of travel and observe for other traffic, personnel, and safe clearances.

6.3.9 If the load being carried obstructs forward view, travel with the load trailing.

6.3.10 Ascend or descend grades slowly, and with caution.

(a) When ascending or descending grades in excess of 5%, loaded rough terrain forklift trucks shall be driven with the load upgrade.

(b) Unloaded rough terrain forklift trucks should be operated on all grades with the load-engaging means downgrade.

(c) On all grades, the load and load-engaging means shall be tilted back, if applicable, and raised only as far as necessary to clear the road surface.

(d) Avoid turning, if possible, and use extreme caution on grades, ramps, or inclines; normally travel straight up and down.

Copyright ASME International
Provided by IHS under license with ASME
No reproduction or networking permitted without license from IHS
Not for Resale

6.3.11 Under all travel conditions, operate the rough terrain forklift truck at a speed that will permit it to be brought to a stop in a safe manner.

6.3.12 Travel with load-engaging means or load low and, where possible, tilted back. Do not elevate the load except during stacking.

6.3.13 Make starts, stops, turns, or direction reversals in a smooth manner so as not to shift load and/or overturn the rough terrain forklift truck.

6.3.14 Do not indulge in stunt driving or horseplay.

6.3.15 Slow down for wet and slippery floors.

6.3.16 Before driving over a dockboard or bridge plate, be sure that it is properly secured. Drive carefully and slowly across the dockboard or bridge plate, and never exceed its rated capacity.

6.3.17 Do not drive rough terrain forklift trucks onto any elevator unless specifically authorized to do so. Approach elevators slowly, and then enter squarely after the elevator car is properly leveled. Once on the elevator, neutralize the controls, shut off engine, and set brakes. It is advisable that all other personnel leave the elevator before truck is allowed to enter or leave.

6.3.18 Avoid running over loose objects on the roadway surface.

6.3.19 When negotiating turns, reduce speed to a safe level, and turn steering handwheel in a smooth, sweeping motion. Except when maneuvering at a very low speed, turn the steering handwheel at a moderate, even rate.

6.3.20 Use special care when traveling without load, as the risk of lateral overturning is greater.

6.4 Loading

6.4.1 Improper use of stabilizer controls (if so equipped) could cause rough terrain forklift truck upset. Always lower the carriage before operating stabilizer controls.

6.4.2 For rough terrain forklift trucks equipped with lateral leveling:

(a) Always level the frame before raising the boom or mast, with or without load.

(b) Lateral leveling should not be used to position an elevated load; instead, lower the load and reposition the rough terrain forklift truck.

6.4.3 Handle only stable or safely arranged loads.

(a) When handling off-center loads that cannot be centered, operate with extra caution.

(b) Handle only loads within the capacity of the rough terrain forklift truck.

(c) Handle loads exceeding the dimensions used to establish rough terrain forklift truck capacity with extra caution. Stability and maneuverability may be adversely affected.

6.4.4 When attachments are used, extra care shall be taken in securing, manipulating, positioning, and transporting the load. Operate rough terrain forklift trucks equipped with attachments as partially loaded trucks when not handling a load.

6.4.5 Completely engage the load with the load-engaging means. Fork length should be at least two-thirds of load length. Where tilt is provided, carefully tilt the load backward to stabilize the load. Caution should be used in tilting backward with high or segmented loads (see paras. 5.3.3 and 6.4.6).

6.4.6 Use extreme care when tilting load forward or backward, particularly when high tiering. Do not tilt forward with load-engaging means elevated except to pick up or deposit a load over a rack or stack. When stacking or tiering, use only enough backward tilt to stabilize the load.

6.4.7 The handling of suspended loads by means of a crane arm (boom) or other device can introduce dynamic forces affecting the stability of a rough terrain forklift truck that are not considered in the stability criteria of para. 8.6. Grades and sudden starts, stops, and turns can cause the load to swing and create a hazard if not externally stabilized [see para. 6.4.7(a)(5)].

(a) When handling suspended loads:

(1) do not exceed the truck manufacturer's capacity of the rough terrain forklift truck as equipped for handling suspended loads;

(2) only lift the load vertically and never drag it horizontally;

(3) transport the load with the bottom of the load and the mast as low as possible;

(4) with load elevated, maneuver the rough terrain forklift truck slowly and cautiously, and only to the extent necessary to permit lowering to the transport position;

(5) use guy lines to restrain load swing whenever possible.

Copyright ASME International
Provided by IHS under license with ASME
No reproduction or networking permitted without license from IHS
Not for Resale

6.5 Operator Care of the Rough Terrain Forklift Truck

6.5.1 At the beginning of each shift and before operating the rough terrain forklift truck, check its condition, giving special attention to the following:

(a) tires and their inflation pressure

(b) warning devices

(c) lights

(d) lift and tilt systems, load-engaging means, chains, cables, and limit switches

(e) brakes

(f) steering mechanism

(g) fuel system(s)

6.5.1.1 If the rough terrain forklift truck is found to be in need of repair or in any way unsafe, or contributes to an unsafe condition, the matter shall be reported immediately to the user's designated authority, and the truck shall not be operated until it has been restored to safe operating condition.

6.5.2 If during operation the rough terrain forklift truck becomes unsafe in any way, the matter shall be reported immediately to the user's designated authority, and the truck shall not be operated until it has been restored to safe operating condition.

6.5.3 Do not make repairs or adjustments unless specifically authorized to do so.

6.5.4 When refueling, smoking in the area shall not be permitted, the engine shall be stopped, and the operator shall not be on the rough terrain forklift truck.

6.5.5 Spillage of oil or fuel shall be carefully and completely absorbed or evaporated and fuel tank cap replaced before restarting engine.

6.5.6 Do not use open flames when checking electrolyte level in storage batteries, liquid level in fuel tanks, or the condition of LPG fuel lines and connectors.

7 MAINTENANCE AND REBUILD PRACTICES

7.1 General

Rough terrain forklift trucks may become hazardous if maintenance is neglected. Therefore, maintenance facilities, trained personnel, and procedures shall be provided. Such facilities may be on or off the premises.

7.2 Specifications

Maintenance and inspection of all rough terrain forklift trucks shall be performed in conformance with the manufacturer's and user's recommendations and the following practices:

(a) a planned system for scheduled inspection, lubrication, maintenance, and adjustment shall be established and followed;

(b) only trained and authorized personnel shall be permitted to maintain, repair, adjust, and inspect rough terrain forklift trucks, and they shall do so in accordance with manufacturer's specifications.

7.2.1 Before starting inspection and repair of a rough terrain forklift truck:

(a) use chocks or other positive truck-positioning devices;

(b) block load-engaging means, innermast(s), or chassis before working on them;

(c) before disconnecting any part of the engine fuel system of gasoline-powered rough terrain forklift trucks with gravity-feed fuel systems, take precautions to eliminate any possibility of unintentional fuel escape;

(d) before disconnecting any part of the engine fuel system of LP gas-powered rough terrain forklift trucks, close the LP tank valve and run the engine until the fuel in the system is depleted and the engine stops. If the engine will not run, close the LP tank valve and vent fuel slowly in a nonhazardous area.

(e) disconnect battery before working on the electrical system.

7.2.2 Operation of the rough terrain forklift truck to check performance shall be conducted in an authorized area where safe clearance exists.

(a) Before starting to operate the rough terrain forklift truck:

(1) be in operating position and fasten seat belt, if so equipped;

(2) disengage clutch on manual transmission-equipped rough terrain forklift trucks, or apply brake on power shift or automatic transmission-equipped rough terrain forklift trucks;

(3) place directional controls in neutral;

(4) start engine;

(5) check functioning of lift and tilt systems, load-engaging means, steering, warning devices, and brakes.

(b) Before leaving the rough terrain forklift truck:

(1) stop truck;

(2) fully lower the load-engaging means;

(3) place directional controls in neutral;

Copyright ASME International
Provided by IHS under license with ASME
No reproduction or networking permitted without license from IHS
Not for Resale

(4) apply the parking brake;
(5) stop the engine;
(6) turn off the ignition circuit;
(7) if the truck must be left on an incline, block the wheels.

7.2.3 Avoid fire hazards and have fire protection equipment present in the work area. Do not use an open flame to check for level or leakage of fuel, battery electrolyte, or coolant. Do not use open pans of fuel or flammable cleaning fluids for cleaning parts.

7.2.4 Properly ventilate work area, vent exhaust fumes, and keep shop clean and dry.

7.2.5 Handle LP gas cylinders with care. Physical damage such as dents, scrapes, or gouges may dangerously weaken the tank and make it unsafe for use.

7.2.6 Brakes, steering mechanisms, control mechanisms, warning devices, lights, governors, lift overload devices, guards and safety devices, lift and tilt mechanisms, articulating axle stops, and frame members shall be carefully and regularly inspected and maintained in a safe operating condition.

7.2.7 Special rough terrain forklift trucks or devices designed and approved for hazardous area operation shall receive special attention to ensure that maintenance preserves the original, approved safe operating features.

7.2.8 Fuel systems shall be checked for leaks and condition of parts. Extra special consideration shall be given in the case of a leak in the fuel system. Action shall be taken to prevent the use of the rough terrain forklift truck until the leak has been corrected.

7.2.9 All hydraulic systems shall be regularly inspected and maintained in conformance with good practice. Tilt cylinders, valves, and other parts shall be checked to ensure that "drift" or leakage has not developed to the extent that it would create a hazard.

7.2.10 The rough terrain forklift truck manufacturer's capacity, operation, and maintenance instruction plates, tags, or decals shall be maintained in legible condition.

7.2.11 Rough terrain forklift trucks shall be kept in a clean condition to minimize fire hazards and facilitate detection of loose or defective parts.

7.2.12 Modifications and additions that affect capacity and safe rough terrain forklift truck operation shall not be performed without manufacturer's prior written approval. Capacity, operation, and maintenance instruction plates, tags, or decals shall be changed accordingly.

7.2.13 Care shall be taken to ensure that all replacement parts, including tires, are interchangeable with the original parts and of a quality at least equal to that provided in the original equipment. Parts, including tires, are to be installed using all safety and applicable installation procedures.

7.2.14 When removing tires, follow industry safety practices. Most importantly, deflate pneumatic tires completely prior to removal from rims. Following assembly of tires on rims, use a safety cage or restraining device while inflating.

7.2.15 Inspection and Repair of Forks

(a) Forks shall be inspected at intervals not greater than 12 months or whenever permanent deformation is suspected. Severe applications shall warrant more frequent inspection. Inspection records shall be kept.

(b) Fork inspection shall be performed by trained personnel. The forks shall be carefully examined for the following:

Examination	Criteria
(1) Surface cracks	Visual check or nondestructive testing
(2) Straightness of blade and shank	Within 0.5% of length of blade or height of shank
(3) Fork angle from upper face of blade to load face of shank	Not greater than 93 deg. or within 3 deg. of original specification
(4) Relative height of fork tips in set when mounted on fork carrier	Difference in height not to exceed 3% of length of blade
(5) Operation of positioning lock (if provided)	Good repair and correct operation
(6) Wear, especially in the area of heel	Thickness shall be within 10% of original specification or not less than minimum thickness as specified by fork manufacturer
(7) Fit of fork arm mounting hooks or eyes	Visual check for fit with no excessive wear or deformation between hooks and carrier of fork eye and shaft
(8) Markings	Shall be legible

If any of the above criteria are not met, the fork shall be withdrawn from service and shall not be returned to service until it has been repaired in accordance with para. 7.2.15(c).

(c) Only the fork manufacturer or an expert of equal competence shall decide if a fork may be repaired.

Copyright ASME International
Provided by IHS under license with ASME
No reproduction or networking permitted without license from IHS
Not for Resale

The repairs shall always be carried out by such qualified personnel to the recommendations and specifications of the fork manufacturer. If a fork is not repairable, it shall be cut in two at the heel area. Repairs are subject to the following restrictions:

(1) Surface cracks or wear shall not be repaired.

(2) When straightness, fork angle, or tip height are reset, the fork shall be appropriately heat treated.

(3) A fork that has undergone any repairs, other than repair or replacement of the positioning lock or fork markings, shall pass load testing in accordance with para. 7.2.15(d) before being returned to service.

(d) The test load shall correspond to 2.5 times the rated capacity as marked on the fork. The load test shall be performed in the same manner as described in para. 8.14.3.

Copyright ASME International
Provided by IHS under license with ASME
No reproduction or networking permitted without license from IHS
Not for Resale

PART III
FOR THE MANUFACTURER

8 DESIGN AND CONSTRUCTION STANDARDS

8.1 Introduction

This Part sets forth safety standards for the design and construction of rough terrain forklift trucks at the time of manufacture.

8.2 Operating Instructions

The manufacturer shall provide an operator's manual covering the operation of the specific type of rough terrain forklift truck. A location to store manual(s) shall be provided on the truck.

8.3 Capacity

8.3.1 Capacity shall be established with a load equivalent to an unrestrained homogeneous cube, with overall dimensions twice the specified load center distance.

8.3.2 Capacity shall be based on the strength of the various components of the rough terrain forklift truck and on stability tests specified in para. 8.6, and shall be expressed in pounds (kilograms), at a specified load center distance in inches (millimeters), that a truck can transport and stack to a specified elevation of the load-engaging means.

8.4 Rated Capacity

8.4.1 The rated capacity shall be established by the manufacturer with a load equivalent to an unrestrained homogeneous cube, with overall dimensions of twice the required load center dimension.

8.4.2 The rated capacity shall be based on the strength of the various components of the rough terrain forklift truck and on stability tests specified in para. 8.6.

8.4.3 The rated capacity for rough terrain forklift trucks is the maximum weight, expressed in pounds (kilograms), at the following load centers, that a truck can transport and stack to a height and/or reach established by the manufacturer:

(a) up to and including 30,000 lb at a 24 in. load center (13 600 kg at 600 mm);

(b) over 30,000 lb at a 24, 36, or 48 in. load center (13 600 kg at 600, 900, or 1200 mm).

8.4.3.1 If any of the foregoing trucks are equipped with manufacturer approved attachments, the rated capacity of that rough terrain forklift truck shall be established by the truck manufacturer and expressed in pounds (kilograms) at a specified load center and for a specified load elevation.

8.5 Nameplates and Markings (See Paras. 8.3 and 8.4)

8.5.1 The manufacturer shall stamp or otherwise permanently affix the serial number to the frame of the rough terrain forklift truck.

8.5.2 The following information shall be provided by the manufacturer on every rough terrain forklift truck, and shall be legibly and permanently inscribed on the lift truck, and/or durable corrosion resistant nameplate(s) and/or label(s): **(02)**

(a) name and address (city, state, country are mandatory) of the manufacturer of the truck;

(b) model number;

(c) serial number;

(d) year of manufacture;

(e) identity of the originally equipped front end attachment (if the truck is not equipped with a device to allow quick interchange of attachments);

(f) maximum weight of the unladen truck fully fueled and serviced, but without the operator, and:

(1) with the weight of forks or attachment(s) if the truck is not equipped with a device to allow quick interchange of attachments.

(2) without the weight of removable attachments if the truck is equipped with a device to allow quick interchange of attachments.

(g) capacity of the truck;

(h) capacity of the truck and attachment combination

Copyright ASME International
Provided by IHS under license with ASME
No reproduction or networking permitted without license from IHS
Not for Resale

at maximum elevation of the load-engaging means with load laterally centered only if the truck is not equipped with a device to allow quick interchange of attachments;

(i) designation of compliance with the mandatory requirements of this Standard, applicable to the manufacturer.

8.5.3 Markings authorized by the appropriate nationally recognized testing laboratory shall be installed on approved rough terrain forklift trucks.

8.5.4 Vertical mast rough terrain forklift trucks shall be provided with a clearly legible chart, visible to the operator, in his operating position, giving load handling capacities in conformance with paras. 8.3 and 8.4. In addition, the rated capacity and capacities at other load centers and load elevations may be shown.

8.5.5 Rough terrain forklift trucks equipped with a telescopic boom that provides variable reach at variable elevations shall be provided with a clearly legible chart, visible to the operator in his operating position, giving load handling capacities in conformance with paras. 8.3 and 8.4 of this Standard. The load capacity chart shall show, as a minimim, the information shown in Figs. 1 and 2. Information shall be given with or without manually operated stabilizers and/or axle locks, if so equipped. Additional information may be included, if desired.

(a) A method of indicating boom angle in degrees shall be provided using 0 deg at the horizontal position of the boom and shall be visible to the operator in his operating position.

(b) A method of indicating boom extension shall be provided starting at minimum extension, and shall be clearly visible to the operator in his operating position.

(c) The load capacity chart shall have the above reference information included in such a manner that the position and capacity of the load carrying device(s) may be determined by the operator.

(02) **8.5.6** The following information shall be provided by the manufacturer on every removable attachment (excluding forks, fork extensions or other interchangeable attachment components), and shall be legibly and permanently inscribed on the removable attachment, and/or durable corrosion resistent nameplate(s) and/or label(s):

(a) name and address (city, state, country are mandatory) of the manufacturer of the attachment;

(b) model number;

(c) serial number;

(d) year of manufacture;

(e) maximum weight of the attachment. Those attachments having interchangeable components (such as carriages that accept different types of forks) shall specify the weight of the attachment with the heaviest interchangeable components;

(f) distance of the center of gravity of the unladen attachment from its mounting. This "mounting" may be:

(1) for fork mounted attachments, that portion of the attachment which contacts the vertical member of the fork.

(2) for attachments that fit on a quick interchange device, the vertical centerline of the point about which the quick interchange device pivots. The vertical centerline shall be established where the center of gravity of the attachment is furthest away from the pivot point.

(g) capacity of the attachment. For those attachments where the capacity may vary depending upon the capacity of interchangeable components such as carriages that accept different types of forks, the maximum capacity of the attachment with interchangeable components shall be specified;

(h) the maximum hydraulic operating pressure recommended by the attachment manufacturer (on hydraulically actuated attachments);

(i) the following instruction (or equivalent); capacity of the rough terrain forklift truck and attachment combination, and the forks, if part of this attachment, may be less than capacity shown on attachment. Refer to load capacity chart for the truck with this attachment, and individual load ratings stamped on forks, if they are required.

(j) designation of compliance with the mandatory requirements of this Standard, applicable to the manufacturer.

8.6 General Stability Criteria — Tilting Platform Tests

8.6.1 Rough terrain forklift trucks shall meet the design stability requirements set forth.

8.6.2 Design stability is the measure of a rough terrain forklift truck's resistance to overturning under rigidly controlled static conditions that include consideration for dynamic factors encountered in normal application and operation. Influencing factors include weight, weight distribution, wheelbase, wheel tread, method of suspension, truck speed, and tire and mast deflection under load.

Copyright ASME International
Provided by IHS under license with ASME
No reproduction or networking permitted without license from IHS
Not for Resale

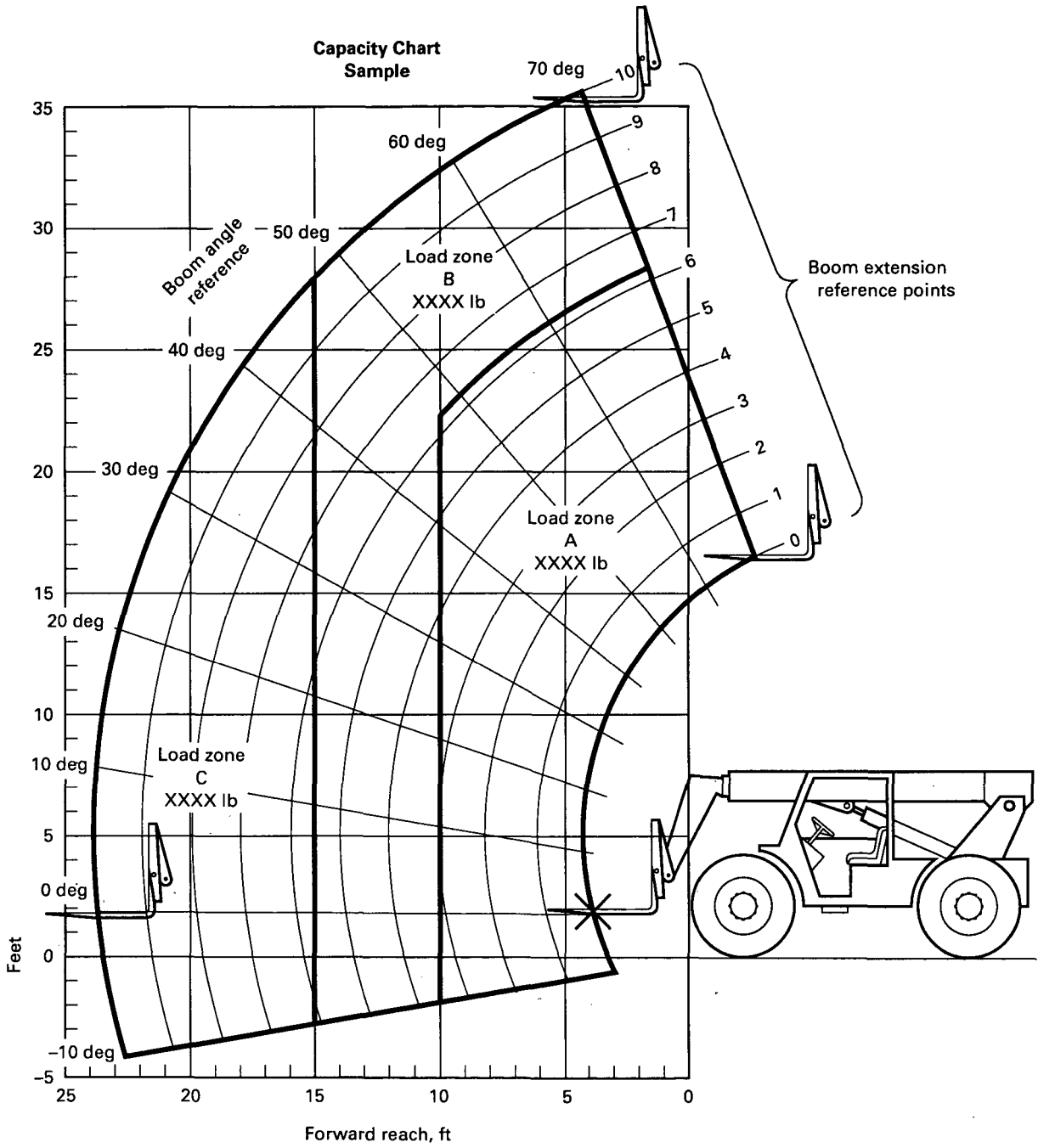

FIG. 1 LIFTING CAPACITY FOR CENTER OF GRAVITY OF 48 in. CUBE — WITHOUT MANUALLY OPERATED STABILIZERS
U.S. Customary Units

Copyright ASME International
Provided by IHS under license with ASME
No reproduction or networking permitted without license from IHS
Not for Resale

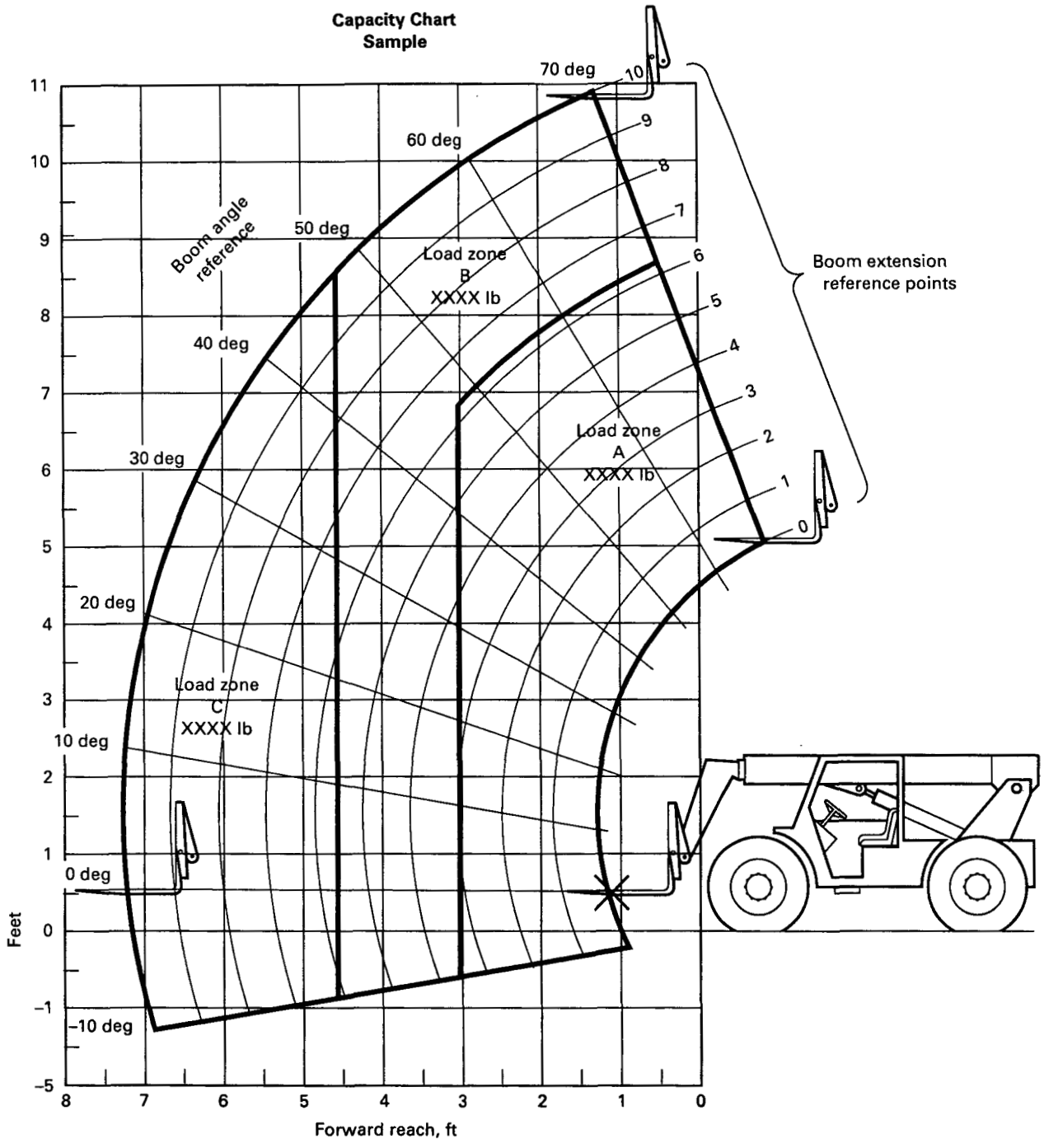

FIG. 2 LIFTING CAPACITY FOR CENTER OF GRAVITY OF 1200 mm CUBE — WITHOUT MANUALLY OPERATED STABILIZERS
Metric Units

Copyright ASME International
Provided by IHS under license with ASME
No reproduction or networking permitted without license from IHS
Not for Resale

8.6.3 Stability shall be determined by one of the following methods.

(a) Tilting Platform Tests. The tests described for the specific rough terrain forklift truck type verify truck stability. They may be used for confirming lift truck design and are intended to be applied to prototype trucks, but may also be applied to production trucks on a selective basis as required by the user or manufacturer.

(b) Calculated Stability Values. Calculations, based on empirical data for similar rough terrain forklift trucks, that include allowance for manufacturing variations and tire, mast, carriage, attachment, and other deflections, may be used to predict stability with reasonable accuracy.

(c) When comparing calculated and test values, the test values are considered the true measure of stability.

8.6.4 General — Conducting Tilting Platform Tests

(a) The tests shall be conducted on a completely operational rough terrain forklift truck with the least stable combination of tires and wheels offered by the manufacturer.

(b) The test platform shall have a rigid, flat surface; otherwise, measurements or effect of slope may be erratic.

(c) The rough terrain forklift truck being tested shall be placed on a platform that is initially horizontal and in the position specified for each of the required tests.

(d) The platform shall be tilted to the slope specified for each of the required tests. See Table 1.

(e) The rough terrain forklift truck is considered stable if it does not overturn when the test platform is tilted to the specified platform slope values. *Overturn* is defined as the point at which the truck completely tips over, not the point at which a wheel(s) leaves the platform.

(f) When placed on the forks, the center of mass of the test load shall be located on the longitudinal centerline of the rough terrain forklift truck.

(g) The coefficient of friction of the platform surface may be increased, if necessary, by an appropriate friction-increasing material to prevent sliding.

(h) When attachments are supplied as original equipment, the rough terrain forklift truck shall be equipped with the attachment, and the test load shall be representative of the capacity of the truck with attachment.

8.6.5 Test Procedure Considerations

(a) Special precautions should be taken to prevent complete overturning of the rough terrain forklift truck or the displacement of the test load during the course of the tests. Provisions for preventing total overturning of the truck should impose no measurable restriction on the truck until the overturning moment occurs.

(b) Although the test load shall not be restrained in any manner that will affect the deflection of the forks or mast or free movement of the rough terrain forklift truck as the platform is tilted, the test load shall be secured against possible sliding on the forks in order to sustain an accurate load center and for safety reasons in case the truck tips past the balance point.

(c) For tests requiring an elevated load, it is permissible to simulate a load by hanging the test load from a framework supported by the forks in the manner described in para. 8.6.5(b). This point of suspension shall be on the centerline of the truck and at a height above the forks and at a distance from the front face of the forks equal to the rated load center dimension before the weight of the test load has caused the forks to deflect. The load shall be free to pivot in any direction around the point of suspension, such as by use of chain or cable.

(d) It is also permissible to use two test loads of equal weight suspended from the ends of a transverse beam fastened to a framework supported by the forks as described in para. 8.6.5(b), provided the loads are suspended from points equidistant from the rated load center location before the weight of the test load has caused the forks to deflect. The loads shall be free to pivot in any direction around the points of suspension, such as by use of chain or cable. The transverse beam shall be strong enough to prevent deflection that would shift the load center.

(e) If test load is to be supported on top of the forks, care shall be taken to see that it contacts the front face of the forks adjacent to the heel. For this purpose, the edge of the test load shall be chamfered to clear the radius at the heel of the fork.

(f) Upon completion of the tests, checks shall be made to make sure the center of gravity of the load has not changed from the original position. Forward drift may be prevented during test by means of a positive shutoff valve in the hydraulic tilt lines, or equivalent.

(g) On pneumatic tire rough terrain forklift trucks, tires shall be checked to make sure they are properly inflated. This is essential to provide accurate and repeatable results.

8.6.6 Test Load. The test load shall be such that its action corresponds to that of a homogeneous cube, the dimensions of which are twice the designated load center distance.

Copyright ASME International
Provided by IHS under license with ASME
No reproduction or networking permitted without license from IHS Not for Resale

TABLE 1
TESTS FOR STABILITY

Test Conditions						Rough Terrain Forklift Truck Elements				
				Platform Slope					Rough Terrain Forklift Truck Position References	
Test Number	Test	Operation	Load	Vertical Mast	Variable Reach	Lift Height and Reach	Rearward Tilt	Stabilizers and Axle Lock	Elevation	Plan
1	Longitudinal	Stacking	Rated capacity	6%	7%	Least stable combination of lift and reach	See para. 8.6.8.7(a)(2)(a)	With and without	Fig. 3, sketches (a) and (b)	Fig. 3, sketch (c), (d), or (e)
2	Longitudinal	Traveling	Rated capacity	22%	22%	20 in. (500 mm) or a defined higher carry position; mast and/or carriage retracted	Max.	Without	Fig. 4, sketch (a) or (b)	Fig. 3, sketch (c), (d), or (e)
3	Lateral	Stacking	Rated capacity	10%	12%	Least stable combination of lift and reach	Lesser of 10 deg or 24 in. (600 mm)	With and without	Fig. 5, sketch (a) or (b)	Fig. 5, sketch (c), (d), (e) or (f)
4	Lateral	Traveling	No load	40%	50%	20 in. (500 mm) or a defined higher carry position; mast and/or carriage retracted	Max.	Without	Fig. 6, sketch (a) or (b)	Fig. 5, sketch (c) or (f)
5	Lateral	Stacking	No load	10%	10%	Least stable combination of lift and reach	Max.	Without	Fig. 5, sketch (a) or (b)	Fig. 5, sketch (c) or (f)

Copyright ASME International
Provided by IHS under license with ASME
No reproduction or networking permitted without license from IHS

Not for Resale

8.6.7 Summary of Tests for Stability. See Table 1.

8.6.8 Tilting Platform Tests

8.6.8.1 The following tests are designed to verify rated capacities of rough terrain forklift trucks having rated capacities up to and including 30,000 lb at 24 in. (13 600 kg at 600 mm) load center. If these tests are used to determine capacity, use appropriate loads and load centers instead of those herein specified. If other tests or tests for rough terrain forklift trucks over 30,000 lb (13 600 kg) rated capacity are required, the details shall be agreed upon between interested parties.

8.6.8.2 Follow the general criteria contained in para. 8.6.

8.6.8.3 A weight simulating an operator shall be used only when it will worsen the stability condition being tested. This shall be a 200 lb weight (90 kg) located with its center of gravity centered 6.2 in. (150 mm) above the Seat Index Point or H-Point of the truck, as determined according to ISO 5353.

8.6.8.4 For trucks where the quantity of fuel affects stability, use less than 15% of tank capacity or more than 90% of tank capacity, whichever will worsen the stability condition being tested.

8.6.8.5 For rough terrain forklift trucks with curved forks or attachments, the test load may be suspended as described in para. 8.6.5(c).

8.6.8.6 When attachments are supplied as original equipment, the same stability tests shall apply, except the lift height and plumb line shall be established from the underside of the carriage, attachment, or load, whichever is lowest.

8.6.8.7 Test 1 — Longitudinal Stability — Stacking. Using the procedure outlined for the test, a rough terrain forklift truck carrying the rated capacity load shall not overturn when the platfrom upon which the truck is standing is tilted about an axis parallel to the axis of the load wheels and in a direction to increase the load overhang. See Fig. 3.

(a) Procedure for Longitudinal Stability — Stacking — Tilting Platform Test

(1) Rough terrain forklift truck shall be placed on an initially level platform with the axis of the load wheels parallel to the tilting axis of the platform.

Rough terrain forklift trucks with articulated frame steering shall be placed in fully articulated position. See Fig. 3, sketch (e).

(2) When placed on the rough terrain forklift truck, the center of mass of the test load shall be located on the longitudinal centerline of the truck.

(a) For rough terrain forklift trucks having a vertical mast only and which includes tilting capability with the test load supported approximately 20 in. (500 mm) above the platform, and in a normal and unrestrained manner with the stationary mast being vertical with the level platform, attach a plumb line at the theoretical intersection of the front and top surfaces of the forks to establish a reference point. This point will be used to indicate the maintaining of the original load overhang when the load is elevated to a specified elevation. (A transit may be used instead of a plumb line to establish verticality.) Variations shall be corrected by use of the mast tilting feature within limits imposed by design on the rough terrain forklift truck.

(b) For variable reach rough terrain forklift trucks, raise the load to the least stable combination of lift and reach as determined by the manufacturer for all load zones (see Figs. 1 and 2).

(3) For rough terrain forklift trucks equipped with manually operated stabilizers and manually operated axle locks, Test 1 shall be conducted with stabilizers and axle locks both engaged and disengaged.

(4) For rough terrain forklift trucks equipped with lateral leveling, Test 1 shall be conducted with the lifting mechanism perpendicular to the platform surface.

(5) With the test load elevated as described in para. 8.6.8.7(b), and for rough terrain forklift trucks with tilting uprights without change in the original overhang dimensions, the test platform shall be tipped to the specified slope. The truck position on the platform shall be maintained by brakes or other similar means, but not by means of wheel chocks.

8.6.8.8 Test 2 — Longitudinal Stability — Traveling. Using the procedure outlined for the test, a rough terrain forklift truck carrying rated capacity load at full rearward tilt and retracted position of the mast and/or carriage and with the load elevated 20 in. (500 mm) from the floor or at a defined higher carry position, measured at the point of intersection of the load carrying surfaces of the forks, shall not overturn when the platform upon which the truck is standing is tilted about an axis parallel to the axis of the load wheels and in a direction to increase the load overhang. See Fig. 4, sketches (a) and (b).

(a) Procedure for Longitudinal Stability — Traveling — Tilting Platform Test

(1) The rough terrain forklift truck shall be placed on an initially level platform with the axis of the load wheels parallel to the tilting axis of the platform.

Copyright ASME International
Provided by IHS under license with ASME
No reproduction or networking permitted without license from IHS
Not for Resale

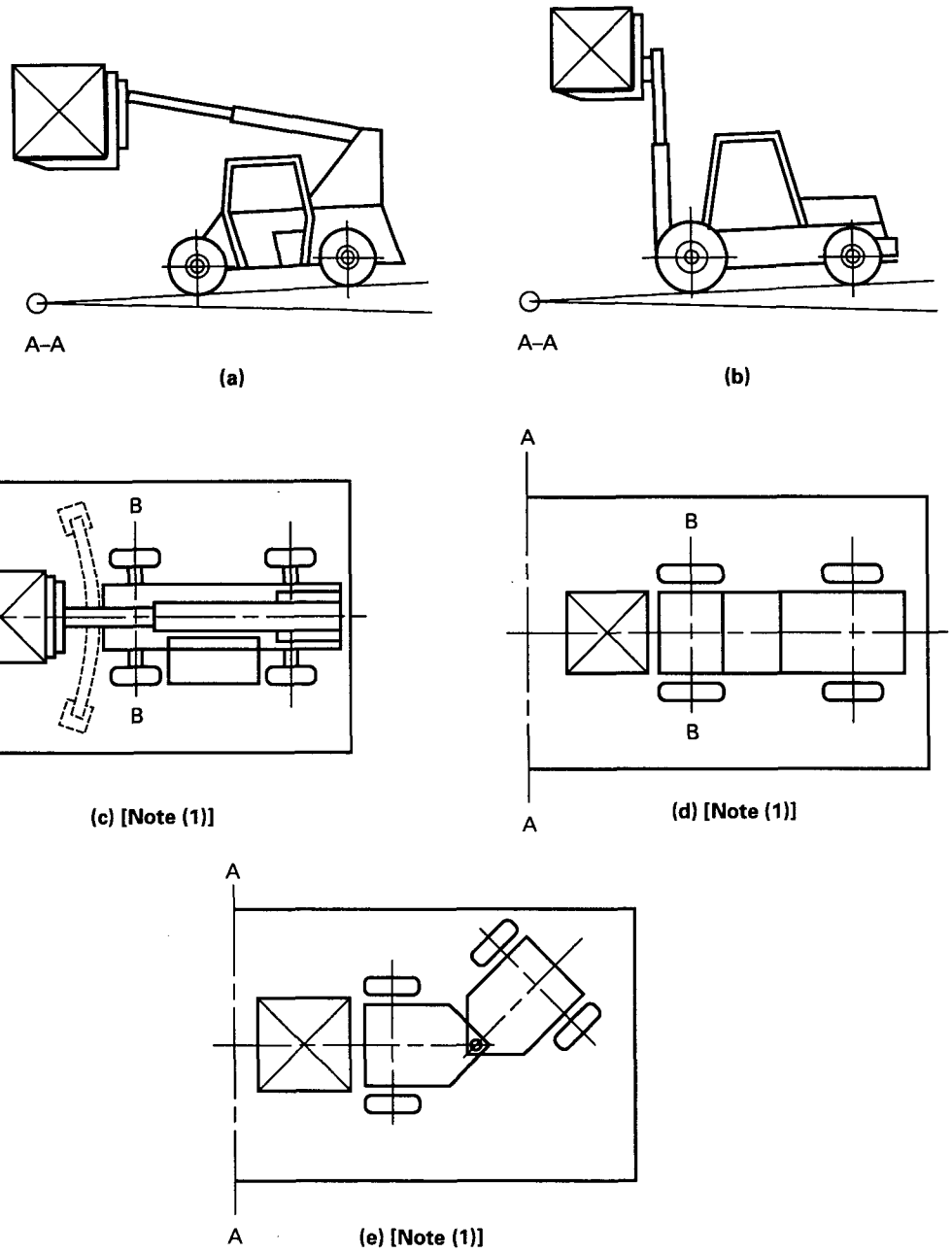

NOTE:

(1) In figures concerning stability testing, the following identifications apply.
A–A = test platform tilt axis
B–B = rough terrain forklift truck axis with minimum stability
Tilting platform is tilted "up" about axis by raising opposite edge of platform.
Lateral stability tests shall be conducted with the rough terrain forklift truck positioned on the platform facing in the direction that produces the least stability.

FIG. 3 LONGITUDINAL STABILITY — STACKING

Copyright ASME International
Provided by IHS under license with ASME
No reproduction or networking permitted without license from IHS
Not for Resale

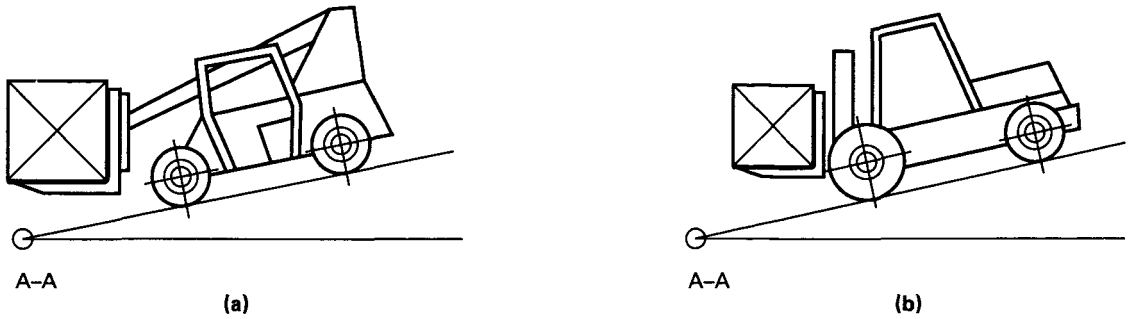

FIG. 4 LONGITUDINAL STABILITY — TRAVELING

Trucks with articulated frame steering shall be in the nonarticulated position.

(2) When placed on the forks, the center of the test load shall be located on the longitudinal centerline of the rough terrain forklift truck. The mast and/or carriage shall be at full rearward tilt and retracted position and the load then elevated until the point of intersection of the two load carrying surfaces of the forks is 20 in. (500 mm) from the floor or at a defined higher carry position.

(3) With the test load elevated as described, the test platform shall be tipped to the specified slope. The rough terrain forklift truck position on the platform shall be maintained by brakes or other similar means that do not affect stability.

(4) For rough terrain forklift trucks equipped with manually operated stabilizers and manually operated axle locks, Test 2 shall be conducted with stabilizers and axle locks disengaged.

(5) For rough terrain forklift trucks equipped with lateral leveling, Test 2 should be conducted with the lifting mechanism perpendicular to the platform surface.

8.6.8.9 Test 3 — Lateral Stability — Stacking. Using the procedure outlined for the test, a rough terrain forklift truck carrying rated capacity load shall not overturn when the platform upon which it is standing is tilted [for trucks with lateral leveling capability, refer to para. 8.6.8.9(f)]. See Fig. 5.

(a) Procedure for Lateral Stability — Stacking — Tilting Platform Test. Position the rough terrain forklift truck on an initially level platform as follows.

(1) For rough terrain forklift trucks with rear wheel or four wheel steering, position such that a line connecting the center of either load tire (or outermost tire where multiple tires are used) and the projection perpendicular to the platform at the point of intersection of the longitudinal centerline of the truck and a line connecting between centers of the rear tires is parallel to the axis of tilting of the platform. See Fig. 5, sketch (f).

(2) For rough terrain forklift trucks with articulated frame steering, position in the fully articulated position with the least stable axis of tilt parallel to the tilting axis of the platform. This may be the reverse steering position from that shown. See Fig. 5, sketch (c).

(3) For rough terrain forklift trucks of other configurations (skid steering, etc.), the least stable axis of tilt is to be determined and placed parallel to the tilting axis of the platform.

(b) For rough terrain forklift trucks equipped with masts only, test is to be conducted at maximum fork height.

(c) For variable reach rough terrain forklift trucks, test is to be conducted at the least stable combination of lift and reach as determined by the manufacturer for all load zones (see Figs. 1 and 2).

(d) For rough terrain forklift trucks equipped with tilt control, forks are to be tilted rearward a maximum of 10 deg or the load center of gravity is to be moved a horizontal distance of 24 in. (600 mm) rearward by means of the tilting mechanism, whichever results in the lesser rearward load movement.

(e) For rough terrain forklift trucks equipped with manually operated stabilizers or manually operated axle locks, Test 3 shall be conducted with stabilizers and axle locks engaged and disengaged.

(f) Lateral leveling capability up to a maximum of 7% (4 deg) may be used in conducting the test as follows:

(1) place loaded rough terrain forklift truck on the platform;

(2) tilt platform to the degree of frame leveling desired;

Copyright ASME International
Provided by IHS under license with ASME
No reproduction or networking permitted without license from IHS
Not for Resale

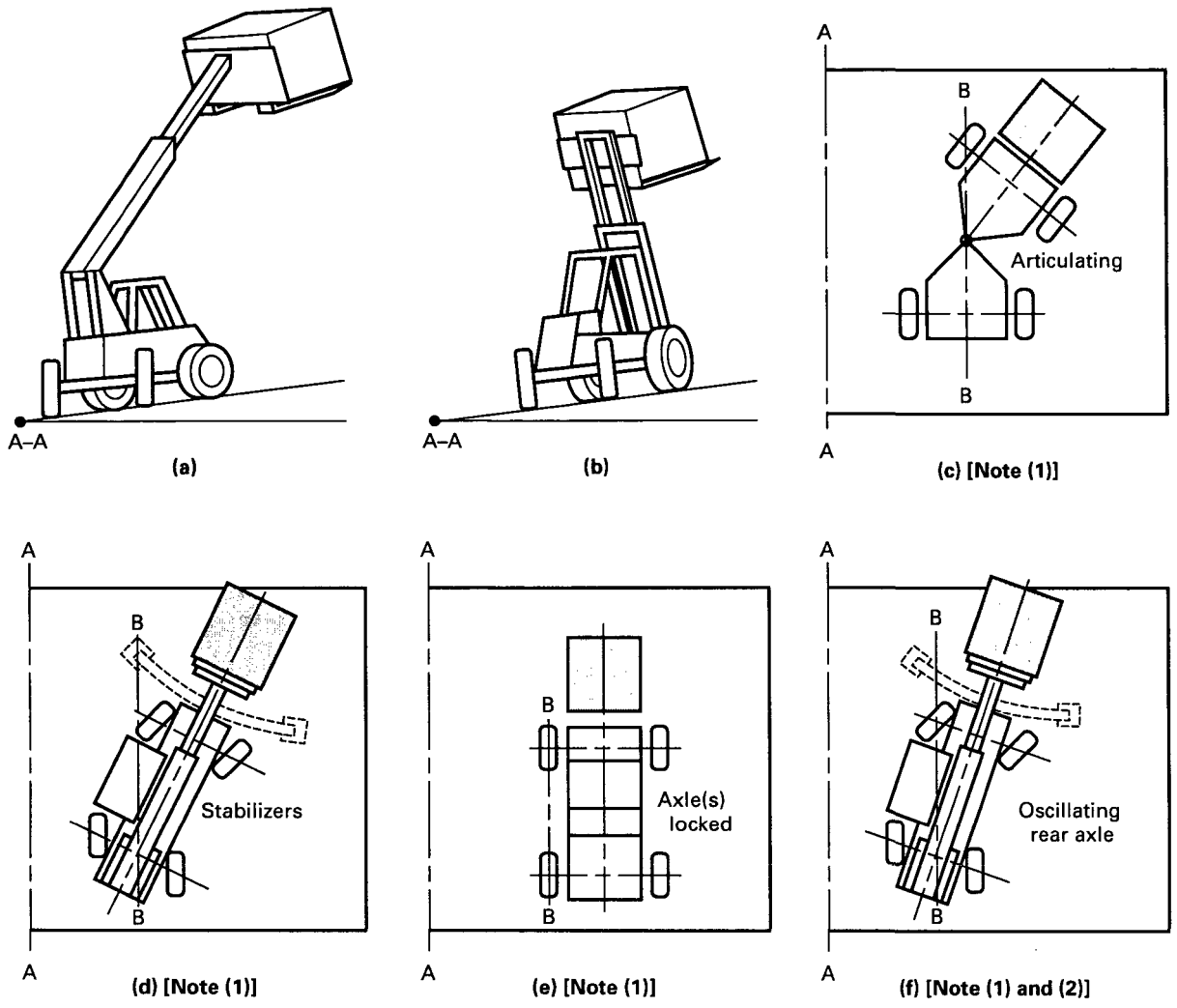

NOTES:

(1) In figures concerning stability testing, the following identifications apply.
A–A = test platform tilt axis
B–B = rough terrain forklift truck axis with minimum stability
Tilting platform is tilted "up" about axis by raising opposite edge of platform.
Lateral stability tests shall be conducted with the rough terrain forklift truck positioned on the platform facing in the direction that produces the least stability.

(2) For rough terrain forklift trucks equipped with four wheel steering, steered wheels shall be in least stable position.

FIG. 5 LATERAL STABILITY — STACKING — LOADED

(3) level rough terrain forklift truck frame;

(4) raise load;

(5) tilt platform to the required slope.

(g) Platform shall be tipped to the specified slope. The rough terrain forklift truck position on the platform shall be maintained by brakes or other similar means that do not affect stability.

(h) For rough terrain forklift trucks up to and including 10,000 lb (4500 kg) rated capacity, equipped with a side shifter or a shifting mast:

(1) capable of shifting off center 4 in. (10 mm) or less in either direction, test on center;

(2) capable of shifting off center more than 4 in. (100 mm), test at extreme shift downgrade.

(i) For rough terrain forklift trucks over 10,000 lb (4500 kg) up to and including 30,000 lb (13 600

Copyright ASME International
Provided by IHS under license with ASME
No reproduction or networking permitted without license from IHS
Not for Resale

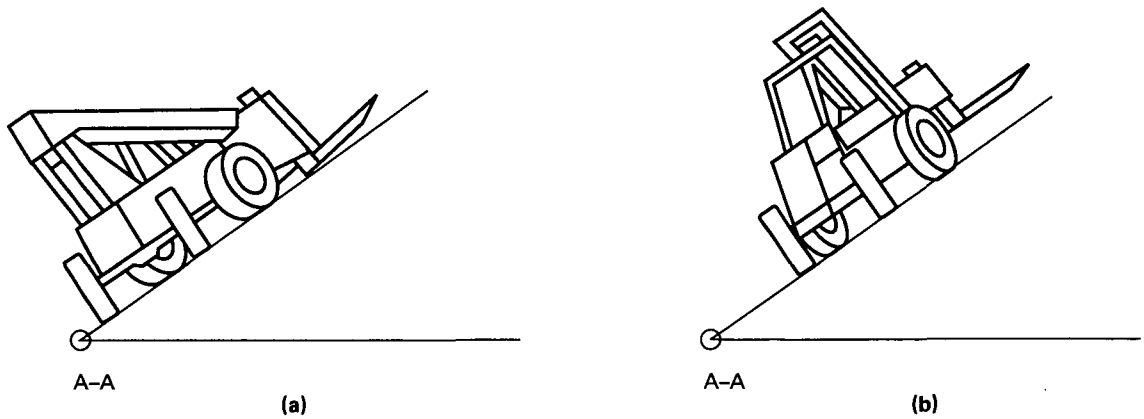

FIG. 6 LATERAL STABILITY — TRAVELING

kg) rated capacity, equipped with a side shifter or shifting mast:

(1) capable of shifting off center 6 in. (150 mm) or less in either direction, test on center;

(2) capable of shifting off center more than 6 in. (150 mm) in either direction, test at extreme shift downgrade.

8.6.8.10 Test 4 — Lateral Stability — Traveling. Using the procedure outlined for the test, an empty rough terrain forklift truck at full rearward tilt of the mast and/or carriage and with the forks elevated 20 in. (500 mm) from the floor, measured at the point of intersection of the load carrying surfaces of the forks (or with the load carrying means supported on a defined higher carry position support), shall not overturn when the platform upon which the truck is standing is tilted. See Fig. 6, sketches (a) and (b).

(a) Procedure for Lateral Stability — Traveling — Tilting Platform Test

(1) Place empty rough terrain forklift truck on an initially level platform in a position as described in para. 8.6.8.9(a).

(2) The mast and/or carriage shall be at full rearward tilt and the forks then elevated until the point of intersection of the two load carrying surfaces of the forks is 20 in. (500 mm) from the floor (or with the load supported on a defined higher carry position support).

(3) With the forks elevated as described, the test platform shall be tipped to the specified slope. The rough terrain forklift truck position on the platform shall be maintained by brakes or other similar means that do not affect stability. Wheel chocks may be used to prevent movement but their height is not to exceed 5% of the tire diameter.

(4) For rough terrain forklift trucks equipped with manually operated stabilizers and/or manually operated axle locks, Test 4 will be conducted with stabilizers and axle locks disengaged.

(5) For rough terrain forklift trucks equipped with lateral leveling, Test 4 should be conducted with the lifting mechanism initially perpendicular to the platform surface.

(6) For rough terrain forklift trucks up to and including 10,000 lb (4500 kg) rated capacity, equipped with a side shifter or a shifting mast:

(a) capable of shifting off center 4 in. (100 mm) or less in either direction, test on center;

(b) capable of shifting off center more than 4 in. (100 mm), test at extreme shift downgrade.

(7) For rough terrain forklift trucks over 10,000 lb (4500 kg) up to and including 30,000 lb (13 600 kg) rated capacity, equipped with a side shifter or shifting mast:

(a) capable of shifting off center 6 in. (150 mm) or less in either direction, test on center;

(b) capable of shifting off center more than 6 in. (150 mm) in either direction, test at extreme shift downgrade.

8.6.8.11 Test 5 — Lateral Stability — Stacking — Unloaded. Procedure for this test is identical to that for Test 4 except that the position of the lifting mechanism is to be in the least stable combination of lift and reach.

8.7 Service Brake System Performance for Rough Terrain Forklift Trucks Up to and Including 70,000 lb (31 750 kg) Loaded Truck Weight

8.7.1 A service brake or hydrostatic drive system that meets the performance requirements of this para-

Copyright ASME International
Provided by IHS under license with ASME
No reproduction or networking permitted without license from IHS
Not for Resale

graph shall be provided.

8.7.2 The service brake system performance shall be measured by one of two methods: the Drawbar Drag Method (see para. 8.7.5.1) or the Stopping Distance Method (see para. 8.7.5.2).

8.7.3 Brake Control Force Limits

8.7.3.1 The required brake performance shall be attained with not more than 157 lb (700 N) on a pedal or 68 lb (300 N) on a hand lever.

8.7.4 Test Conditions

8.7.4.1 Road surface shall be level clean asphalt, brushed concrete, or equivalent, and of adequate length to permit safe performance of the test. When using the stopping distance test procedure, the road shall also be of sufficient length to permit stabilized travel speed of the rough terrain forklift truck before application of the brakes.

8.7.4.2 The rough terrain forklift truck shall be loaded to the maximum permitted by the manufacturer. The power boost system, if supplied, shall be operating.

8.7.4.3 The burnishing of brakes prior to test is optional. The following is a suggested procedure:

(a) load — 50% of rough terrain forklift truck rated capacity;

(b) initial road speed: maximum or 15 mph (24 km/h), whichever is less;

(c) final road speed: zero (stop);

(d) deceleration rate: maximum without sliding tires or lifting steer tires;

(e) alternate: forward stop then reverse stop;

(f) rest: 30 min after each 50 stops. This is to be used as a guide; if smoke is evident, the rest time may be increased and the number of stops between rests decreased.

8.7.5 Test Methods

8.7.5.1 Drawbar Drag Method

(a) Measure drawbar drag in both forward and reverse direction while towing at no more than 1 mph (1.6 km/h) in both directions.

(b) The drawbar shall be horizontal and attached at the standard coupler height but not more than 36 in. (900 mm) above the road surface;

(c) Travel controls, including the transmission, shall be in neutral and all brake systems disengaged.

(d) The service brake system shall enable the rough terrain forklift truck to develop a drawbar drag at least equal to a percent of the loaded truck weight as follows:

$$D = 3V \text{ (mph)}$$
$$D = 1.86V_1 \text{ (km/h)}$$

but not required to exceed 25% of loaded rough terrain forklift truck weight where

V = maximum travel speed, loaded, mph
V_1 = maximum travel speed, loaded, km/h
D = drawbar drag as a percent of loaded rough terrain forklift truck weight (e.g., 25 for 25%)

8.7.5.2 Stopping Distance Method. Determine that the brakes will stop the loaded rough terrain forklift truck within the required distance, measured from the point of brake application, calculated from the following formulas:

$$s = \frac{0.334V^2}{D} \quad \text{or} \quad s_1 = \frac{3.94V_1^2}{D}$$

where

s = approximate theoretical stopping distance, ft
V = maximum travel speed, loaded, mph
D = drawbar drag as a percent of loaded rough terrain forklift truck weight (25% maximum)
s_1 = approximate theoretical stopping distance, m
V_1 = maximum travel speed, loaded, km/h

8.7.6 Strength For rough terrain forklift trucks having a downward movement of brake pedal to apply the service brake(s), the system shall be capable of withstanding a brake pedal force of 300 lb (1335 N) without failure of any component.

8.7.7 System Recovery, Stored Energy Brake Systems. (02) With the rough terrain forklift truck stationary, the service braking system shall have the capability of delivering at least:

(a) Pneumatic Systems. 70% of maximum system pressure measured at the brakes when the brakes are fully applied 20 times at a rate of six applications per minute with the engine at optimum rpm for recovery.

(b) Hydraulic Systems. 90% of maximum system pressure measured at the brakes when the brakes are fully applied 20 times at a rate of six applications per minute with the engine at its lowest rpm for recovery.

8.7.8 Warning Devices, Stored Energy Brake Systems. (02) A service braking system using stored energy shall be equipped with a warning device which actuates before:

(a) Pneumatic Systems. System pressure drops below 50% of the manufacturer's specified maximum system pressure.

Copyright ASME International
Provided by IHS under license with ASME
No reproduction or networking permitted without license from IHS
Not for Resale

(b) Hydraulic Systems. Stored energy level drops below a pressure at which the system provides a minimum of six full pressure stops when applied at a rate of six applications per minute with the engine off.

The device shall be readily visible and/or audible to the operator, and provide a continuous warning. Gages indicating pressure or vacuum shall not be acceptable in meeting these requirements.

8.8 Parking Brake System Performance for Rough Terrain Forklift Trucks Up to and Including 70,000 lb (31 750 kg) Loaded Truck Weight

8.8.1 The parking brake system shall be capable of holding the rough terrain forklift truck stationary on a 15% dry swept-concrete grade under all conditions of loading in both forward and reverse directions. Brakes may be burnished prior to test.

8.8.2 The parking brake system may be part of or include the service brake system.

8.8.3 The parking brake system when applied shall maintain the required grade holding capability despite any contraction of the brake parts, exhaustion of the source of energy, or leakage of any kind.

8.8.4 The required parking brake performance shall be attained with not more than 157 lb (700 N) on a pedal or 69 lb (300 N) on a hand level.

8.9 Emergency Stopping System

8.9.1 The emergency stopping system shall provide that any single failure (other than a common friction means such as brake shoes and drums) in the service brake system shall not leave the machine without braking capability to comply with the following requirements.

(a) The emergency stopping system shall be capable of developing 35% of the service brake performance requirement with no more than 157 lb (700 N) pedal effort or 68 lb (300 N) hand lever effort. The emergency stopping system shall be capable of application by a person in the operating position and be arranged so that it cannot be released from the operating position after any application unless immediate reapplication can be made. The emergency stopping system may be applied automatically by malfunction of the service brake system. If an automatic emergency stopping system is used, the automatic application shall occur after the warning device is activated. A parking brake system meeting these requirements is acceptable.

8.10 Load Handling Controls

8.10.1 Load Handling Controls

(a) Should preferably be located for right-hand operation;

(b) shall be self-centering;

(c) shall be clearly and durably identified on the control or in close proximity to indicate function(s) and direction of motion of load or equipment.

8.10.2 A single lever may be used to perform more than one function.

8.10.3 The upper surface of a rotary control device should move in the same sense of direction as a lever.

8.10.4 Special controls (such as for preselective or automatic devices) should preferably be identified and preferably be in accordance with the above recommendations.

8.10.5 For load handling symbols, see ASME B56.11.3

8.10.6 Lever- or handle-type controls (including toggle switches) should preferably be arranged in sequence of location and direction of motion according to Table 2.

8.10.7 Where the operation of lifting, lowering, tilting, and/or auxiliary device is controlled by a pair of push buttons, they shall operate in the same sense as described in para. 8.10.6. For example, actuation of the button that is located to the rear (relative to the operator's position) should serve the same function as motion of a control lever to the rear.

8.11 Travel Controls

8.11.1 Travel controls shall be clearly and durably identified on the control or in close proximity to indicate function(s) and direction of motion of load or equipment.

8.11.2 Travel controls shall be so arranged that power will be applied to the wheels only when the transmission or direction control has been actuated. A positive neutral position or control should be provided.

8.11.3 Engine speed shall be no greater than low idle unless the acceleration control has been intentionally actuated.

Copyright ASME International
Provided by IHS under license with ASME
No reproduction or networking permitted without license from IHS
Not for Resale

TABLE 2
LOAD HANDLING CONTROLS

		Direction of Motion	
		Of Load or Equipment	Predominant Motion of the Operator's Hand
Functions	Reach	Retract / Extend	Rearward or to Left / Forward or to Right
	Lift	Up / Down	Rearward / Forward
	Tilt (Mast/Fork)	Rearward / Forward	Rearward or to Left / Forward or to Right
	Frame Level	Clockwise / Counterclockwise	Right / Left
	Stabilizer	Raise / Lower	Rearward or Up / Forward or Down
	Side Shift	Right / Left	Rearward or to Right / Forward or to Left
Auxiliary Functions	Push-Pull	Rearward / Forward	Rearward / Forward
	Rotate Laterally	Clockwise / Counterclockwise	Rearward, Up, or to Right / Forward, Down, or to Left
	Rotate Longitudinally	Rearward / Forward	Rearward or Up / Forward or Down
	Load Stabilizer	Down / Up	Rearward or Up / Forward or Down
	Swing	Right / Left	Rearward, Up, or to Right / Forward, Down, or to Left
	Slope	Clockwise / Counterclockwise	Rearward, Up, or to Right / Forward, Down, or to Left
	Fork Position	Together / Apart	Rearward or Up / Forward or Down
	Trip	Engage / Release	Rearward or Up / Forward or Down
	Grip	Engage / Release	Rearward or Up / Forward or Down
	Clamp	Clamp / Release	Rearward or Up / Forward or Down

Copyright ASME International
Provided by IHS under license with ASME
No reproduction or networking permitted without license from IHS
Not for Resale

8.11.4 A manually operated engine shutoff device (may be key-type) shall be provided.

8.11.5 Service brakes, if foot operated, shall be applied by forward and/or downward motion of a pedal located to allow right-foot operation.

8.11.6 When separate brake pedals are provided for the independent right and left brake control, it shall be possible to obtain combined and/or equalized control.

8.11.7 The parking brake or parking brake device control shall be located convenient to the operator.

8.11.8 When a hand operated clutch control is provided, it shall be moved toward the operator (generally rearward) for disengagement.

8.11.9 Clutch pedal, if used, shall disengage the clutch by forward and/or downward motion, and shall be located for left-foot operation.

8.11.10 When a combination clutch and service brake pedal is used, the initial forward and/or downward movement shall disengage the clutch and the final forward and/or downward movement shall apply the service brakes.

8.11.11 Accelerator, if foot operated, shall increase speed by downward motion of a pedal located for right-foot operation.

8.11.12 When the direction of an engine speed hand control is in a plane parallel to the longitudinal axis of the rough terrain forklift truck, the direction of motion shall be generally forward or upward to increase engine speed.

8.11.13 When a combination pedal controls both acceleration and service brakes, forward and/or downward motion of the brake portion shall apply the service brakes. The combination pedal shall be located for right-foot operation.

8.11.14 The engine starting mechanism shall not be operable if the operation will produce rotation of the drive wheels.

8.11.15 When a hand operated forward-reverse directional control lever (nonvariable speed) is provided, it shall be moved forward for forward vehicle motion, and be moved rearward for rearward vehicle motion. If a neutral position is provided, provisions shall be made to locate and maintain the control in its neutral position.

8.11.16 When a hand operated variable-speed control is provided, it shall be moved generally forward or upward to increase speed.

8.11.17 When a hand operated combination direction and variable-speed ratio control lever is provided, it shall be moved forward or away from the operator from the neutral position for forward travel and increasing forward speed. It shall be moved generally rearward or toward the operator from the neutral position for rearward travel and increasing rearward speed. Provision shall be made for secondary motion when passing through neutral. A positive neutral position shall be provided.

8.11.18 When foot operated directional and variable-speed control(s) is provided, forward and/or downward motion on the outer or rear element of the control(s) should produce reverse direction, and forward and/or downward motion on the inner or forward element of the control(s) should produce forward direction. Forward and/or downward motion of either element shall increase speed. All direction and variable-speed control(s) shall be clearly and permanently identified to indicate their function. A positive neutral position or control shall be provided.

8.12 Steering Controls

8.12.1 Rough terrain forklift trucks employing a steering wheel with the operator facing the load shall steer as follows. Clockwise rotation of the handwheel shall steer the truck to the operator's right.

8.12.2 Skid steer trucks employing dual lever steering controls shall steer as follows. Rearward or upward motion of the right-hand control and/or forward or downward motion of the left-hand control shall turn the truck clockwise.

8.12.3 All steering controls shall be confined within the plan view outline of the rough terrain forklift truck.

8.12.4 Where steering can be accomplished with either hand and the steering mechanism is of a type (power steering or equivalent) that prevents road reactions from causing the handwheel to spin, steering knobs may be used. When used, steering knobs shall be of a type that can be engaged by the operator's hand from the top and shall be within the periphery of the steering handwheel.

Copyright ASME International
Provided by IHS under license with ASME
No reproduction or networking permitted without license from IHS
Not for Resale

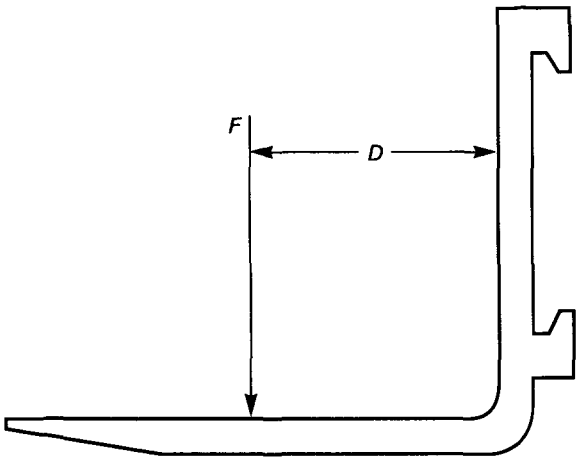

FIG. 7 TYPICAL FORK

8.13 Tilt Mechanism

To maintain stability with lifting mechanism elevated, tilting should be contollable, smooth, and at reasonable speed.

8.14 Forks

8.14.1 Forks shall be designed to avoid unintentional unhooking and/or excessive lateral movement.

8.14.2 Each fork shall be clearly stamped with its individual load rating in an area readily visible and not subject to wear; for example, 1500 × 24, meaning 1500 lb load rating at 24 in. load center, or 2000 × 600, meaning 2000 kg load rating at 600 mm load center.

8.14.3 Fork strength shall permit the following loading and method of test.

(a) The test load F shall correspond to three times the load rating of the fork arm and shall be applied to it at the applicable distance D from the front face of the fork arm shank. See Fig. 7.

(b) The fork arm shall be restrained in a manner identical to that used on the rough terrain forklift truck.

(c) The test load shall be applied twice, gradually and without shock, and maintained for 30 sec each time.

(d) The fork arm shall be checked before and after the second application of the test load. It shall not show any permanent deformation.

8.14.4 These tests are intended to be applied to prototype forks but may also be applied to production forks on a selective basis, as required by the user or manufacturer.

TABLE 3
OVERHEAD GUARD IMPACT TEST LOAD

Rough Terrain Forklift Truck Rated Capacity at a 24 in. Load Center	Impact Test Load × Drop Distance, ft-lb[1]	Minimum Weight of Test Load, lb
3,000 lb and under	4,000	750
3,001 lb to 5,000 lb	8,000	1,500
5,001 lb to 8,000 lb	16,000	3,000
8,001 lb to 14,000 lb	24,000	3,000
14,001 lb to 25,000 lb	32,000	3,000
25,001 lb and over	36,000	3,000
at a 600 mm Load Center	**(J)**	**kg**
1 360 kg and under	5,400	340
1 361 kg to 2 270 kg	10 800	680
2 271 kg to 3 630 kg	21 760	1 360
3 631 kg to 6 350 kg	32 640	1 360
6 351 kg to 11 300 kg	43 520	1 360
11 301 kg and over	48 960	1 360

NOTE:
(1) For metric equivalent dimensions:

$$\text{Drop distance in m} = \frac{\text{Joules (J)}}{\text{Weight of test load in kg} \times 9.8}$$

Details of conducting the test and measuring the deformation are covered in para. 8.16.3(c).

8.15 Rollover Protective Structures

Rough terrain forklift trucks fitted with a side mounted operator's compartment shall be equipped with rollover protective structures that comply with the requirements of ANSI/SAE J1040 as applicable to wheel loaders.

8.16 Overhead Guards

8.16.1 Rough terrain forklift trucks shall be fitted with an overhead guard.

8.16.2 Design Requirements

(a) The overhead guard and its mounting shall be capable of withstanding the impact of a 100 lb (45 kg) hardwood covered cube (or equivalent) under the conditions specified in para. 8.16.3(b).

(b) The overhead guard and its mounting shall be capable of withstanding an impact test as specified in Table 3. Details of conducting the test and measuring the deformation are covered in para. 8.16.3(c).

(c) Openings in the top of the overhead guard shall not exceed 6 in. (150 mm) in one of the two dimensions, width or length.

(d) The overhead guard shall be large enough to extend over the operator in his normal operating position

Copyright ASME International
Provided by IHS under license with ASME
No reproduction or networking permitted without license from IHS
Not for Resale

during rough terrain forklift truck operation. It shall not extend beyond the plan view outline of the truck.

(e) For sit-down rider rough terrain forklift trucks, a vertical clearance of at least 39 in. (990 mm) should be maintained from the point of maximum depression of the seat under the operator to the underside of the section of the guard under which the operator's head is located in his normal position during truck operation.

(f) When requested by the user, the manufacturer may reduce the normal overhead guard height and the vertical clearance for the operator's head under the guard to permit rough terrain forklift truck operation by the user with a guard in areas where overhead obstructions limit the overall lowered height of the truck.

8.16.3 Test Procedures

(a) General

(1) Tests shall be conducted with the overhead guard in place on a rough terrain forklift truck for which it is designed, or a simulated mounting may be used.

(2) If the 100 lb (45 kg) hardwood covered cube (or equivalent) drop test is conducted first, the same overhead guard and mounting can be used to conduct the impact drop test.

(b) Cube Drop Test — 100 lb (45 kg)

(1) The 100 lb (45 kg) test cube shall be covered with hardwood (or equivalent) and measure approximately 1 ft (300 mm) on a side.

(2) The test cube shall be dropped in free-fall vertically at random on the overhead guard, and the center of the cube shall strike within a 24 in. (600 mm) diameter circle centered above the operator's seat.

(3) The test cube shall be positioned to drop in free-fall with a flat surface approximately parallel to the top of the overhead guard, and not strike on a corner or edge of the cube.

(4) The test cube shall be dropped as described, a distance of 5 ft (1500 mm) ten times, without fracture (no parts separation; however, evidence of minor cracks is permissible) and without permanent deformation exceeding 0.75 in. (18 mm) based on the original head clearance provided by the guard (see Fig. 8).

(c) Impact Drop Test

(1) The test load shall be composed of 2 × 4 normal construction grade lumber 12 ft (3.6 m) long and not to exceed 40 in. (1000 mm) in width. The 2 × 4s should be placed with the 4 in. (100 mm) nominal dimension of the cross section horizontal. The lumber shall be bound together with at least three metal bands, one approximately in the center, and the others not further than 3 ft (0.9 m) from each end (see Fig. 9).

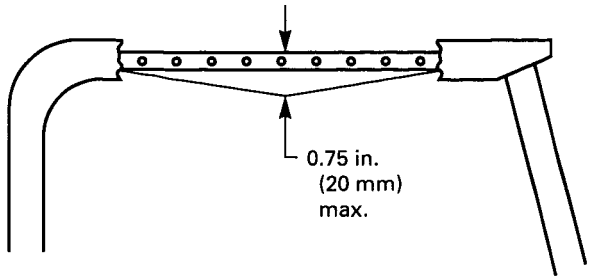

FIG. 8 OVERHEAD GUARD CUBE DROP DEFORMATION LIMIT

A test load of different dimensions and/or materials may be used, provided it results in a test not less severe than that described.

(2) The test load shall be dropped in free-fall from an approximate horizontal position and from a height to develop the required impact in ft-lb (J), specified in Table 3.

(3) The test load shall be centered above the overhead guard with the 12 ft (3600 mm) length at right angles to the longitudinal centerline of the rough terrain forklift truck, the 40 in. (1000 mm) dimension flat, and shall strike the guard in this position (see Fig. 9).

(4) The permanent deformation of the overhead guard and its mounting after impact shall be measured between a horizontal plane tangent to the underside of the guard at the operator's position and a horizontal plane tangent to the upper surface of the steering wheel. There shall be not less than 10 in. (250 mm) between the planes (see Fig. 10).

8.17 Load Backrest Extension

Load backrest extension, if provided, should have height, width, and size of openings not to exceed 6 in. (150 mm) in one of the two dimensions, to minimize the possibility of the load falling toward the operator.

8.18 Guards for Wheels

Guards or other means shall be provided to protect the operator, in the normal operating position, from particles thrown by the tires or wheels.

8.19 Guards for Moving Parts

The operator, in the normal operating position, shall be protected from moving parts that represent a hazard.

Copyright ASME International
Provided by IHS under license with ASME
No reproduction or networking permitted without license from IHS
Not for Resale

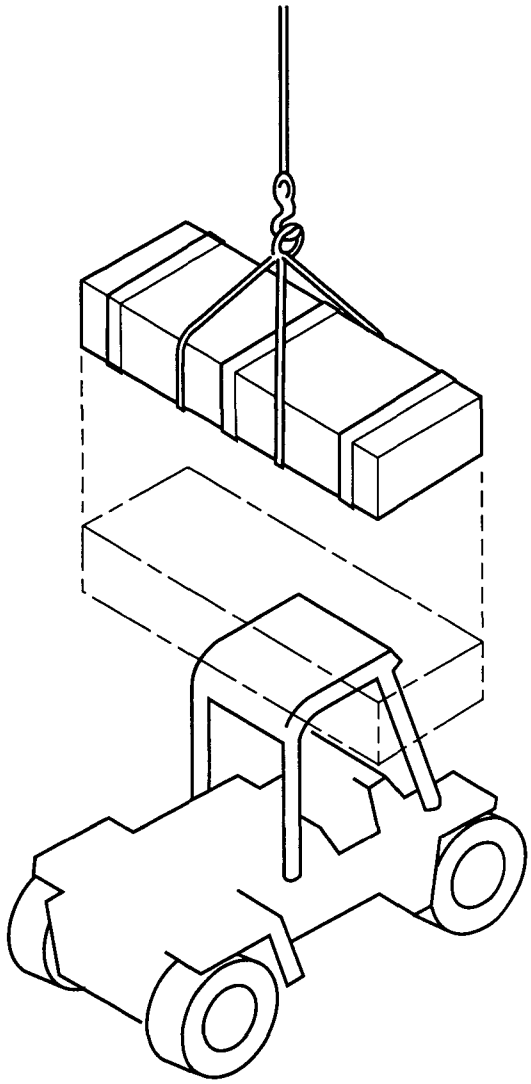

FIG. 9 OVERHEAD GUARD IMPACT TEST METHOD

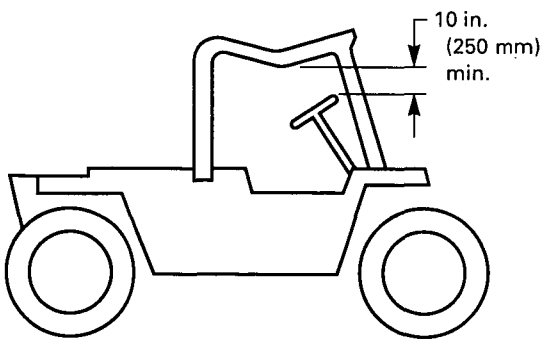

FIG. 10 OVERHEAD GUARD IMPACT DEFORMATION LIMIT

8.20 Overtravel Limits

Provision shall be made to prevent travel of mechanical systems such as hoists, tilt, etc., beyond that intended by design.

8.21 Warning Device

8.21.1 Every rough terrain forklift truck shall be equipped with an operator controlled horn, whistle, gong, or other sound-producing device(s).

8.21.2 In addition, other devices (visible or audible) suitable for the intended area of use may be installed when requested by the user.

8.22 Pedal and Platform Surfaces

Control pedals and control platforms stood on or engaged by the operator's feet shall have slip resistant surfaces.

8.23 Emergency Lowering of Load

8.23.1 Vertical masts shall be provided with a means to prevent the load from lowering at a rate in excess of 120 ft/min (0.6 m/s) in case of a failure in the load supporting hydraulic control circuits.

8.23.2 Variable reach rough terrain forklift trucks shall be provided with means to prevent the load mechanism from moving in case of a failure in the load support hydraulic lines.

8.24 Platforms for Elevating Personnel

8.24.1 Design requirements for the manufacture of the platform shall include the following:

(a) a platform floor having a slip resistant surface located not more than 8 in. (200 mm) above the normal load supporting surface of the fork;

(b) floor dimensions which shall not exceed two times the load center distance listed on the rough terrain forklift truck nameplate, measured parallel to the longitudinal center plane of the truck, nor have a width greater than the overall width of the truck [measured across the load bearing tires plus 10 in. (250 mm) on either side]. Minimum space for each person on the platform shall not be less than 18 in. (450 mm) in either direction.

(c) a 4 in. (100 mm) minimum height toe plate which may be omitted at the access opening;

(d) an overhead protection device, when requested by the user;

Copyright ASME International
Provided by IHS under license with ASME
No reproduction or networking permitted without license from IHS
Not for Resale

(e) protection for personnel in their normal working position on the platform from moving parts of the rough terrain forklift truck that represent a hazard;

(f) information prominently indicated on the platform:

(1) maximum work load including personnel and equipment;

(2) weight of empty platform.

(g) means so that the platform can only be centered laterally on the rough terrain forklift truck and retained against the vertical face of the forks, carriage, or lifting mechanism;

(h) a means to securely attach the platform to the lifting mechanism, and to prevent the platform from inadvertent pivoting;

(i) controls, when supplied for use on the elevating platform, shall be readily accessible to the operator and protected from damage and inadvertent actuation. They shall include provision to stop and start the engine of the rough terrain forklift truck and to lower the platform in case of engine failure;

(j) means shall be provided to render inoperative all operating controls, other than those on the elevating platform, when the controls on the elevating platform have been selected for use. Only one location of controls shall be capable of being operated at one time, with the exception of the emergency control(s) covered in para. 8.24.1(k);

(k) when controls are provided on the platform, a clearly identified emergency lowering means available at ground level shall be provided. Such means shall be protected against misuse.

(l) restraining means such as a guardrail or a means for securing personnel such as a body belt or lanyard. A guardrail or similar structure shall have a nominal height to the platform floor of 42 in. (1066 mm) around its upper periphery and include a midrail. It may be hinged, removable, or of chains, and used if proper positioning is easily discernible. Such restraining means shall be capable of withstanding a concentrated horizontal force of 200 lb (890 N) applied at the point of least resistance without permanent deformation. A body belt and lanyard is to have an attachment point provided overhead for freedom of movement, and its length is to limit free-fall to 5 ft (1500 mm) measured from the point of attachment to the operator. The complete system shall be capable of withstanding three consecutive drop tests to simulate a 250 lb (113 kg) person falling 6 ft (1800 mm) without allowing the test weight to fall free to the ground. A deceleration device may be included.

(m) lanyards, when provided, shall be arranged so as not to cause a tripping hazard;

(n) body belts, when provided, should have a width of at least 1.75 in. (44 mm);

(o) structural safety factor — all load supporting structural elements of the work platform shall have a structural safety factor of not less than 2 to 1 based on the minimum yield strength of the materials used.

8.25 Seat Belts

Seat belts shall be provided that meet or exceed the requirements of ANSI/SAE J386.

8.26 Passenger Compartment (02)

8.26.1 If a passenger compartment is provided, the compartment shall provide equivalent protection as provided for the operator and shall comply with paras. 8.16, 8.17, 8.18, 8.19, 8.20, 8.23, and 8.26 of this Standard.

(a) If the passenger compartment is separate from the operator's compartment, there shall be no controls for the operation of any of the rough terrain forklift truck's functions in the passenger's compartment.

(b) If the passenger compartment is not separate from the operator's compartment, sufficient space shall be provided for the passenger to allow the operator to operate the rough terrain forklift truck's controls without interference with the passenger.

8.26.2 A permanent label shall be placed in clear view of the seated passenger using text and/or pictorials to provide the following information.

The passenger shall:

(a) remain seated at all times except when entering and exiting;

(b) fasten the seat belt;

(c) keep all parts of the body, including hands and feet, inside the passenger compartment;

(d) keep clear of, and make no contact with, the operating controls of the rough terrain forklift truck.

Copyright ASME International
Provided by IHS under license with ASME
No reproduction or networking permitted without license from IHS
Not for Resale

MANDATORY APPENDIX I
REFERENCES

(02)

The following are safety standards and codes (unless otherwise noted) referenced within this Standard. It is the intent of this Standard to refer to the standards and codes listed below in their latest edition when they are referenced within the Standard.

ANSI/NFPA 30-1996, Flammable and Combustible Liquids Code

ANSI/NFPA 58-1995, Storage and Handling of Liquefied Petroleum Gases

ANSI/NFPA 505-1996, Fire Safety Standard for Powered Industrial Trucks Including Type Designations, Areas of Use, Maintenance, and Operation

Publisher: National Fire Protection Association (NFPA), 1 Batterymarch Park, Quincy, MA 02269

ANSI/UL 558-1991 Standard for Safety for Internal Combustion-Engine-Powered Industrial Trucks

ANSI/UL 583-1991 Standard for Safety for Electric-Battery-Powered Industrial Trucks

Publisher: Underwriters Laboratories (UL), 333 Pfingsten Road, Northbrook, IL 60062

ASME B56.11.3-1992 Load Handling Symbols for Powered Industrial Trucks (not a safety standard)

ASME B56.11.7-1998 Liquid Propane Gas (LPG) Fuel Cylinders (Horizontal or Vertical) Mounting — Liquid Withdrawal — For Powered Industrial Trucks

Publisher: The American Society of Mechanical Engineers (ASME International), Three Park Avenue, New York, NY 10016-5990

ANSI Z53.1-1979, Color Code for Marking Physical Hazards

ANSI Z93.0-1989, Industrial Engineering Terminology (not a safety standard)

ANSI Z535.2-1991, Environmental and Facility Safety Signs

ANSI/IES RP7-1990, Practice for Industrial Lighting (not a safety standard)

ANSI/SAE J386-JUN 85, Operator Restraint Systems for Off-Road Work Machines

ISO 5353-1978, Earth-Moving Machinery — Seat Index Point (International Standard)

Publisher: American National Standards Institute, Inc. (ANSI), 11 West 42nd Street, New York, NY 10016

The following are related documents:

ASME B20.1-1996, Safety Standard for Conveyors and Related Equipment

ASME B30.9-1996, Slings

ASME B56.11.4-1992, Hook-Type Forks and Fork Carriers for Powered Industrial Forklift Trucks (not a safety standard)

Publisher: The American Society of Mechanical Engineers (ASME International), Three Park Avenue, New York, NY 10016-5990.

Copyright ASME International
Provided by IHS under license with ASME
No reproduction or networking permitted without license from IHS
Not for Resale

NONMANDATORY APPENDIX A
GLOSSARY OF COMMONLY USED WORDS AND PHRASES

approved: the classification or listing as to fire, explosion, and/or electric shock hazard by a nationally recognized testing laboratory, i.e., a laboratory qualified and equipped to conduct examinations and tests such as those prescribed by Underwriters Laboratories, Inc.

attachment: a device other than conventional forks or load backrest extension, mounted permanently or removably on the elevating mechanism of a truck for handling the load. Popular types are fork extensions, clamps, rotating devices, side shifters, load stabilizers, rams, and booms.

attachment, removable: an attachment that can be mounted on the forks, or in place of the forks or the carriage, by means of such conventional fasteners as bolts, pins, etc., and that does not require the disassembly of any other portion of the lifting system to install or remove.

axle lock: means to lock out vertical axle oscillation to improve lateral stability.

belt, body: see *body belt.*

body belt: a simple or compound strap with means for securing it about the waist and for securing a lanyard to it.

boom: the pivoting support member providing the guideways that permits horizontal and/or vertical movement of the load engaging means.

boom angle: reference angle of boom to the horizontal (horizontal being equal to 0 deg).

boom extension reference points: a method of indicating boom extension used in combination with boom angle to identify lifting capacity from the capacity chart.

brake system, parking: a means to prevent inadvertent movement of a stationary truck.

brake system, service: the primary means of any type used for stopping and holding the truck.

bridge plate: a portable device for spanning the gap between two rail cars.

capacity: the capacity of a truck equipped with load carriage and forks, or with attachments, is the weight at a specified load center that a given truck can transport in a carry position and stack to the specified elevation of the load-engaging means.

NOTE: Capacity is used to designate the weight handling ability of a particular rough terrain forklift truck as equipped.

carriage: a support structure for forks or attachments.

center of gravity (of load): that point at which the load mass is concentrated. It is located horizontally by its distance from the vertical fork face and vertically by its distance above the load bearing surface of the forks, or equivalents for other load-engaging means. Except where otherwise indicated, this point is located in the vertical plane of the truck's longitudinal center line.

creep: slowest steady state of movement.

deceleration device: any mechanism that serves to reduce the falling speed and provide a complete stop in falling without interference and manipulation of the device.

dockboard: a portable or fixed device for spanning the gap or compensating for difference in level between loading platforms and carriers.

fork height: the vertical distance from the floor to the horizontal load carrying surface of the forks, measured adjacent to the heel of the forks.

forklift truck: see *truck, forklift.*

forks: horizontal tine-like projections, normally suspended from the carriage, for engaging and supporting loads.

forward reach: horizontal distance measured from the forward most point of the front tires to the load center located on the top surface of the forks.

Copyright ASME International
Provided by IHS under license with ASME
No reproduction or networking permitted without license from IHS
Not for Resale

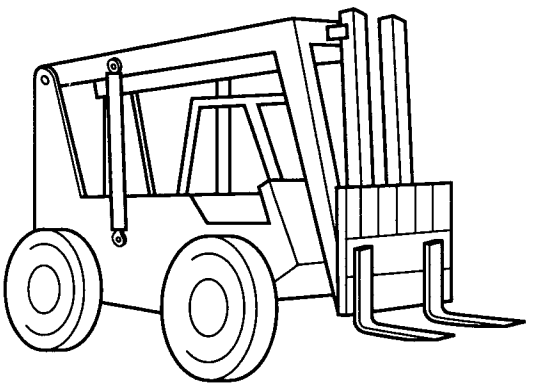

FIG. A1 VARIABLE REACH — LINKAGE TYPE (Four Wheel Steer, Two Wheel Steer, Four Wheel Drive, Two Wheel Drive)

free lift: the attainable lift from the extreme lowered position of the carriage before the stated overall lowered height of the mast is exceeded by any standard part of the forks, mast, or carriage assemblies.

lanyard: a rope suitable for supporting one person. One end is fastened to a body belt or harness and the other end is secured to a substantial object or a lifeline.

lateral leveling: changing the lateral relationship between the rough terrain forklift truck lifting mechanism and the ground; generally used to adjust the mast or boom to vertical when the truck is standing on a side slope.

leveling, lateral: see *lateral leveling.*

lifeline: a rope, suitable for supporting one person, to which a lanyard, deceleration device, or body belt (or harness) is attached.

lift truck: see *truck, forklift.*

load backrest: that portion of the carriage and forks serving to restrain the load when the load is tilted rearward or upward.

load backrest extension: a removable device that increases the load restraining area beyond that provided by the load backrest.

load center: the horizontal longitudinal distance from the intersection of the horizontal load carrying surfaces and vertical load-engaging faces of the forks (or equivalent load-positioning structure) to the center of gravity of the load.

maintenance platform: see *work platform.*

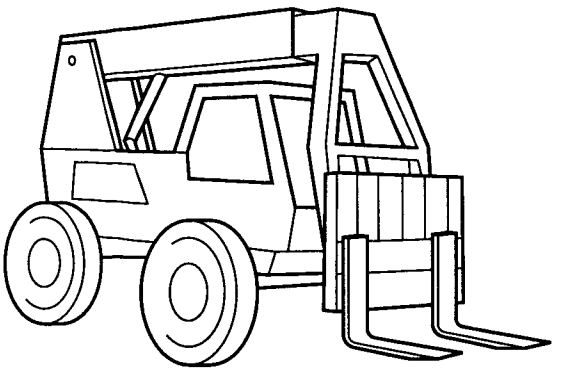

FIG. A2 VARIABLE REACH — BOOM TYPE (Four Whel Steer, Two Wheel Steer, Four Wheel Drive, Two Wheel Drive)

mast: the support member providing the guideways permitting vertical movement of the carriage. It is usually constructed in the form of channels or similar sections providing the supporting pathway for the carriage rollers.

maximum fork height: the fork height attainable in fully raised position when loaded.

overhead guard: a framework fitted to a truck over the head of a riding operator for the purpose of providing protection for the operator from falling objects.

parking braking system: see *braking system, parking.*

platform, work: a platform intended to provide safe working conditions and designed to be mounted on a high-lift fork truck or other elevating device, providing an area for person(s) elevated by and working from the platform work surface.

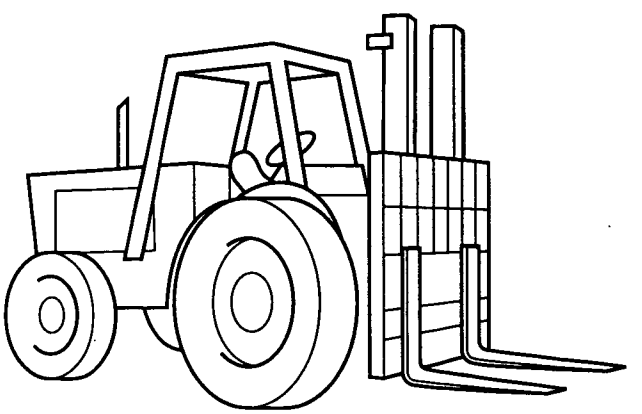

FIG. A3 VERTICAL MAST, TWO WHEEL STEER, TWO WHEEL DRIVE, FOUR WHEEL DRIVE

Copyright ASME International
Provided by IHS under license with ASME
No reproduction or networking permitted without license from IHS
Not for Resale

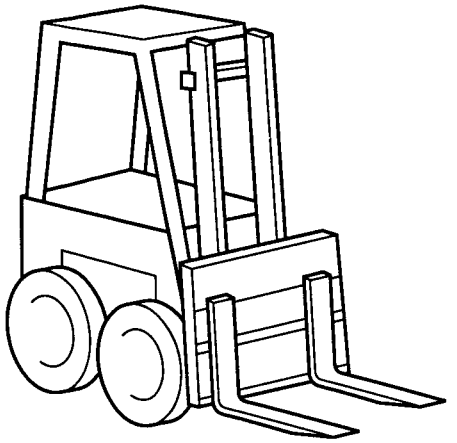

FIG. A4 VERTICAL MAST, SKID STEER

powered industrial truck: see *truck, powered industrial.*

rated capacity: for a truck equipped with load carriage and forks or attachments is the weight established by the manufacturer at a required load center that a given truck can transport and stack to a height established by the manufacturer.

NOTE: Rated capacity is used as a means for comparing the weight handling ability of rough terrain forklift trucks.

removable attachment: see *attachment, removable.*

rough terrain forklift truck: see *truck, rough terrain forklift.*

safety platform: see *platform, work.*

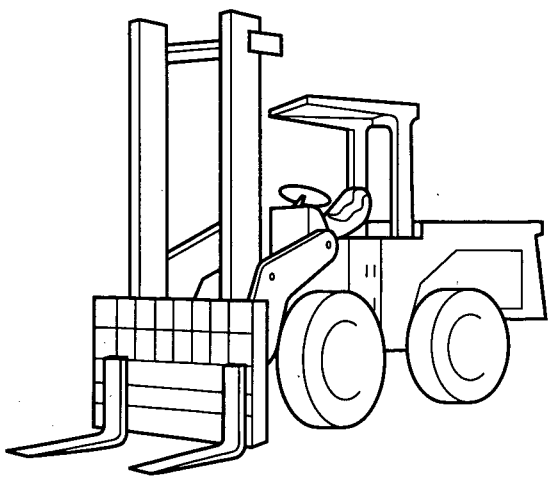

FIG. A5 VERTICAL MAST, ARTICULATED FRAME STEER, FOUR WHEEL DRIVE

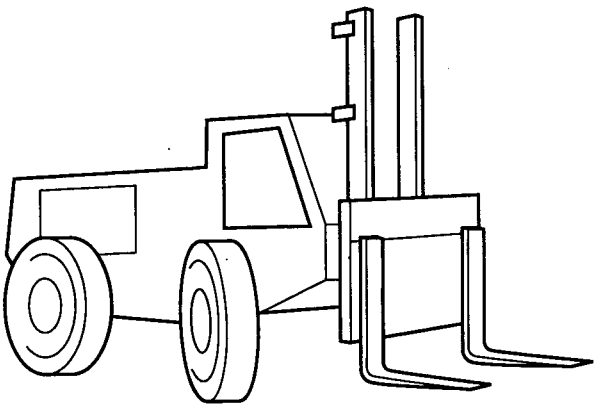

FIG. A6 VERTICAL MAST, FOUR WHEEL STEER, TWO WHEEL DRIVE, FOUR WHEEL DRIVE

safety work surface: a surface intended to reduce the possibility of foot slippage.

service brake system: see *brake system, service.*

side loader: see *truck, side loader.*

side mounted operator compartment: an operator's compartment attached so that its longitudinal center line is outside of the rough terrain forklift truck main frame structure in the plan view.

stabilizers, retractable: extendible or pivoting mechanical supports used to improve stability of a stationary rough terrain forklift truck.

tiering: the process of placing one load on or above another.

truck: see *truck, rough terrain forklift.*

truck, forklift: a self-loading truck, equipped with load carriage and forks for transporting and tiering loads.

truck, powered industrial: a mobile, power propelled truck used to carry, push, pull, lift, stack, or tier material.

truck, rough terrain forklift: a wheeled-type truck designed primarily as a forklift truck, which may be equipped with attachments. This truck is intended for operation on unimporved natural terrain as well as the disturbed terrain of construction sites. See Section 2 and Figs. A1 through A6.

truck, side loader: a self-loading truck, generally high lift, having load-engaging means mounted in such a manner that it can be extended laterally under control to permit a load to be picked up and deposited in

Copyright ASME International
Provided by IHS under license with ASME
No reproduction or networking permitted without license from IHS
Not for Resale

the extended position and transported in the retracted position.

truck, variable reach rough terrain forklift: a rough terrian forklift truck with the additional capability of extending and retracting the forks (and load) in a longitudinal direction. See Figs. A1 and A2.

user: a person or organization responsible for employing rough terrain forklift trucks.

variable reach rough terrain forklift truck: see *truck, variable reach rough terrain.*

work platform: see *platform, work.*

Copyright ASME International
Provided by IHS under license with ASME
No reproduction or networking permitted without license from IHS
Not for Resale

ASME B56.6 Interpretations

Replies to Technical Inquiries
October 1996 — October 2000

FOREWORD

This publication includes all of the written replies issued between the indicated dates by the Secretary, speaking for the ASME B56 Committee on Powered and Nonpowered Industrial Trucks, to inquiries concerning interpretations of technical aspects of ASME B56.6, Safety Standard for Rough Terrain Forklift Trucks.

These replies are taken verbatim from the original replies except for a few typographical corrections and some minor editorial corrections made for the purpose of improved clarity. In some few instances, a review of the interpretation revealed a need for corrections of a technical nature; in these cases a corrected interpretation follows immediately after the original reply.

These interpretations were prepared in accordance with the accredited ASME procedures. ASME procedures provide for reconsideration of these interpretations when or if additional information is available which the inquirer believes might affect the interpretation. Further, persons aggrieved by this interpretation may appeal to the cognizant ASME Committee or Subcommittee. ASME does not "approve," "certify," "rate," or "endorse" any item, construction, proprietary device, or activity.

Copyright ASME International
Provided by IHS under license with ASME
No reproduction or networking permitted without license from IHS
Not for Resale

Interpretation: 6-15

Subject: ASME B56.6-1992; Para. 5.16.1

Date Issued: October 4, 1996

Question: Do the qualifications of para. 5.16.1 of ASME B56.6-1992 require the forklift operator to provide proof of a physical by a qualified physician such as the physical required by the U.S. Department of Transportation for a commercial driver's license?

Reply: No. The requirement in para. 5.16.1 of ASME B56.6 for operators as to visual, auditory, physical, and mental ability is not intended to require proof by a qualified physician. The responsibility lies with the user to determine that the forklift operator is qualified to operate a rough terrain forklift. The user may elect to require a physical to determine this qualification, but is not required to do so.

Interpretation: 6-16

Subject: ASME B56.6b-1998

Date Issued: September 7, 2000

Question (1): Does para. 8.24.1(b), as referred to by para. 5.15.1(a) of ASME B56.6b-1998, allow the employer to section off a portion of the platform in which the dimension width is greater than the overall width of the truck plus 10 in. on either side, by utilizing a chain guardrail to prohibit employee access to these areas?

Reply (1): No. There is no provision in this Standard to allow the employer to limit employee access to a portion of the work platform. Truck stability would be affected by the weight of additional materials that could be placed in this area of the platform as well as by the weight of an employee. The maximum platform width is the distance measured over the load bearing tires plus 20 in.

Question (2): If the rough terrain forklift truck has outriggers that extend past the width of the truck tires, is the 10 in. measurement still taken from the tires or is the measurement taken from outside of the outriggers?

Reply (2): Yes. The measurement is taken from the tires. This is required because the personnel platform could be raised with the outriggers retracted or deployed.

Interpretation: 6-17

Subject: ASME B56.6b-1998

Date Issued: October 20, 2000

Question: Does para. 8.24.1(l) of ASME B56.6b-1998 permit personnel to conduct work without being secured by a body belt and lanyard when elevated by a rough terrain forklift if a properly designed platform is secured and equipped with a guardrail system of appropriate measurement and erection?

Reply: Yes. ASME B56.6b-1998 does not require a body belt and lanyard unless a guardrail or similar structure is not provided on the work platform.

Copyright ASME International
Provided by IHS under license with ASME
No reproduction or networking permitted without license from IHS
Not for Resale

ISBN 0-7918-2757-7

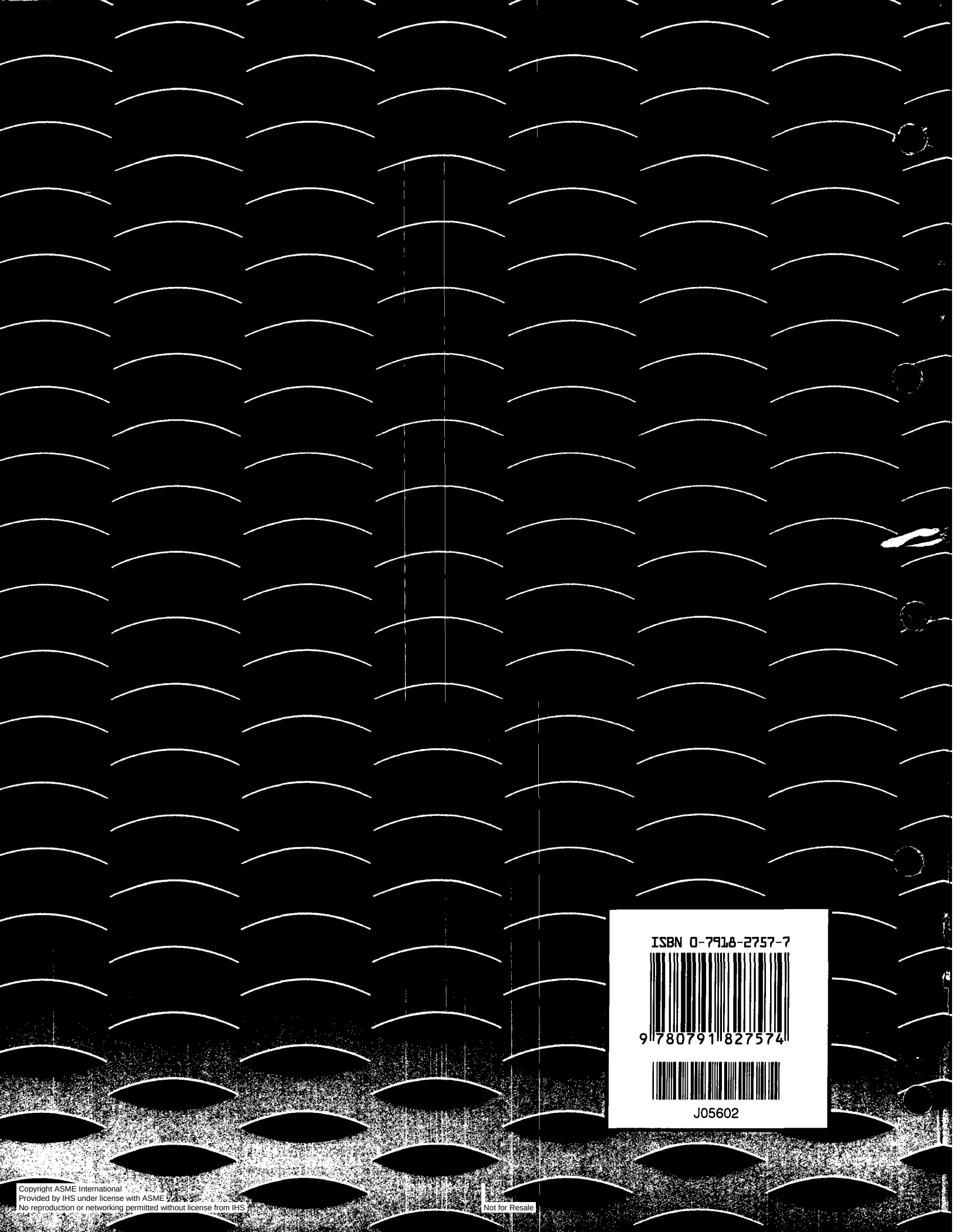

Copyright ASME International
Provided by IHS under license with ASME
No reproduction or networking permitted without license from IHS

Not for Resale