SPECIAL NOTICE

ASME B56.10-1992
SAFETY STANDARD FOR MANUALLY PROPELLED HIGH LIFT INDUSTRIAL TRUCKS

There will be no addenda or interpretations for 1993 published to ASME B56.10-1992. Within the past year neither changes to, nor inquiries regarding, the technical requirements of this document have been issued.

OCTOBER 1993

THE AMERICAN SOCIETY OF MECHANICAL ENGINEERS
345 East 47th Street, New York, N.Y. 10017

K0132A

Copyright ASME International
Provided by IHS under license with ASME
No reproduction or networking permitted without license from IHS

Not for Resale

ASME B56.10 92 ■ 0759670 0528924 218 ■

ASME B56.10-1992

POWERED AND NONPOWERED INDUSTRIAL TRUCKS

Safety Standard for Manually Propelled High Lift Industrial Trucks

AN AMERICAN NATIONAL STANDARD



The American Society of Mechanical Engineers

Copyright ASME International
Provided by IHS under license with ASME
No reproduction or networking permitted without license from IHS

Not for Resale

AN AMERICAN NATIONAL STANDARD

POWERED AND NONPOWERED INDUSTRIAL TRUCKS

Safety Standard for Manually Propelled High Lift Industrial Trucks

ASME B56.10-1992

The American Society of Mechanical Engineers

345 East 47th Street, New York, N.Y. 10017

Copyright ASME International
Provided by IHS under license with ASME
No reproduction or networking permitted without license from IHS

Not for Resale

Date of Issuance: October 31, 1992

The 1992 edition of this Standard is being issued with an automatic subscription service. The use of an addenda allows revisions made in response to public review comments or committee actions to be published on a regular yearly basis; revisions published in addenda will become effective 1 year after the Date of Issuance of the addenda. The next edition of this Standard is scheduled for publication in 1997.

ASME issues written replies to inquiries concerning interpretations of technical aspects of this Standard. The interpretations will be included with the above addenda service. Interpretations are not part of the addenda to the Standard.

ASME is the registered trademark of The American Society of Mechanical Engineers.

This code or standard was developed under procedures accredited as meeting the criteria for American National Standards. The Consensus Committee that approved the code or standard was balanced to assure that individuals from competent and concerned interests have had an opportunity to participate. The proposed code or standard was made available for public review and comment which provides an opportunity for additional public input from industry, academia, regulatory agencies, and the public at large.

ASME does not "approve," "rate," or "endorse" any item, construction, proprietary device, or activity.

ASME does not take any position with respect to the validity of any patent rights asserted in connection with any items mentioned in this document, and does not undertake to insure anyone utilizing a standard against liability for infringement of any applicable Letters Patent, nor assume any such liability. Users of a code or standard are expressly advised that the determination of the validity of any such patent rights, and the risk of infringement of such rights, is entirely their own responsibility.

Participation by federal agency representative(s) or person(s) affiliated with industry is not to be interpreted as government or industry endorsement of this code or standard.

ASME accepts responsibility for only those interpretations issued in accordance with governing ASME procedures and policies which preclude the issuance of interpretations by individual volunteers.

No part of this document may be reproduced in any form,
in an electronic retrieval system or otherwise,
without the prior written permission of the publisher.

Copyright © 1992 by
THE AMERICAN SOCIETY OF MECHANICAL ENGINEERS
All Rights Reserved
Printed in U.S.A.

Copyright ASME International
Provided by IHS under license with ASME
No reproduction or networking permitted without license from IHS

Not for Resale

FOREWORD

(This Foreword is not part of ASME B56.10-1992.)

At the January 1988 meeting of the B56.11 Subcommittee, a suggestion was made that a safety standard for manually propelled high lift industrial trucks be developed. An agreement was made to contact the known manufacturers of this type of equipment to determine if there was sufficient interest in such a standard. After determining that there was sufficient interest, the B56.11 Subcommittee, at its June 1988 meeting, voted to establish a task group to develop such a standard.

The first meeting of the task group was held in November 1988. A number of assignments were made to draft portions of the proposed standard. After several meetings of the task group, the B56.11 Subcommittee voted to recommend to the B56 Main Committee that this task group become a permanent subcommittee of the B56 Committee. At its November 1989 meeting, the B56 Committee voted to elevate the status of the task group to a Subcommittee (B56.10) of the B56 Committee.

After several meetings of the Subcommittee and, following subcommittee letter ballot approval, the proposed B56.10 Standard was submitted for the approval of the B56 Main Committee.

Following approval by the B56 Committee and ASME, and after public review, ASME B56.10-1992 was approved by the American National Standards Institute on April 29, 1992.

This Standard shall become effective 1 year after the date of issuance. Part III applies only to vehicles manufactured after the effective date.

Safety codes and standards are intended to enhance public health and safety. Revisions result from committee consideration of factors such as technological advances, new data, and changing environmental and industry needs. Revisions do not imply that previous editions were inadequate.

Copyright ASME International
Provided by IHS under license with ASME
No reproduction or networking permitted without license from IHS
Not for Resale

ASME STANDARDS COMMITTEE B56
Powered and Nonpowered Industrial Trucks

(The following is the roster of the Committee at the time of approval of this Standard.)

OFFICERS

J. D. Schell, *Chairman*
J. W. Uetrecht, *Vice Chairman*
W. Berger, *Secretary*

COMMITTEE PERSONNEL*

ALLIANCE OF AMERICAN INSURERS
R. A. Klebes, Liberty Mutual Insurance Co.

AMERICAN TRUCKING ASSOCIATIONS, INC.
J. M. Dandrea, American Trucking Associations, Inc.
N. Darmstadter, *Alternate,* American Trucking Associations, Inc.

INDUSTRIAL TRUCK ASSOCIATION, THE
W. J. Montwieler, The Industrial Truck Association

INTERNATIONAL ASSOCIATION OF MACHINISTS AND AEROSPACE WORKERS
E. W. Sprang, International Association of Machinists and Aerospace Workers
J. W. Barnett, *Alternate,* International Association of Machinists and Aerospace Workers

MOTOR VEHICLE MANUFACTURERS ASSOCIATION
E. E. Meyer, Ford Motor Co.

NATIONAL ELECTRICAL MANUFACTURERS ASSOCIATION
W. N. Ritchie, East Penn Manufacturing Co., Inc.
J. L. Browning, *Alternate,* National Electrical Manufacturers Association

UNDERWRITERS LABORATORIES, INC.
E. W. Killoren, Underwriters Laboratories, Inc.

INDIVIDUAL MEMBERS
O. S. Carliss
J. A. Draxler, The Elwell-Parker Electric Co.
K. L. Emerling
R. C. Fuller
G. L. Gaulke, Hyster Co.
E. B. Gutta
D. E. Hupp, Aluminum Company of America
R. R. Kareckas, Kellogg Co.

---

*The members listed, except for those listed under the heading for individual members, were nominated by their respective organizations.

Copyright ASME International
Provided by IHS under license with ASME
No reproduction or networking permitted without license from IHS
Not for Resale

D. T. LaBelle, ITL Industrial Tires, Inc.
R. G. Lang, Eastman Kodak Co.
A. C. Karelus, *Alternate,* Eastman Kodak Co.
R. R. Lasecki
E. J. Ramsey, Sellick Equipment Ltd.
G. H. Ritterbusch, Caterpillar Tractor Co.
R. N. Rogers, The Raymond Corp.
J. D. Schell
E. R. Sirotak
F. Steinberger, Hydra-Matic, Division of General Motors
J. W. Uetrecht, Crown Equipment Corp.
D. L. Dunlap, *Alternate,* Crown Equipment Corp.

SUBCOMMITTEE B56.10 — MANUALLY PROPELLED HIGH LIFT INDUSTRIAL TRUCKS

J. W. Uetrecht, *Chairman,* Crown Equipment Corp.
W. Berger, *Secretary,* ASME
G. A. Brace, M. D. Knowlton Co.
J. J. Letourneau, Lee Engineering/Regal Equipment Co.
R. A . Renaud, *Alternate,* Lee Engineering/Regal Equipment Co.
F. Steblaj, Blue Giant Equipment of Canada, Ltd.
L. J. Thompson, Equipment Company of America
L. F. Whittaker, Big Joe Manufacturing Co.

Copyright ASME International
Provided by IHS under license with ASME
No reproduction or networking permitted without license from IHS
Not for Resale

CONTENTS

Foreword iii
Committee Roster v
General 1

Part I Introduction

1 Scope 3
2 Purpose 3
3 Interpretation 3

Part II For the User

4 General Safety Practices 4
5 Operating Safety Rules and Practices 7
6 Maintenance and Rebuild Practices 9

Part III For the Manufacturer

7 Design and Construction Standards 11

Figures

1 Typical Fork 15
2 Manually Propelled High Lift Industrial Truck (Nontelescopic) 17
3 Manually Propelled High Lift Industrial Truck (Telescopic) 18

Table

1 Manually Propelled High Lift Trucks 14

Appendices

A References 19
B Glossary of Commonly Used Words and Phrases 21

Copyright ASME International
Provided by IHS under license with ASME
No reproduction or networking permitted without license from IHS
Not for Resale

POWERED AND NONPOWERED INDUSTRIAL TRUCKS

GENERAL

This Standard is one of a series that has been formulated with the American Society of Mechanical Engineers as Sponsor in accordance with the Accredited Organization method, the procedures accredited by the American National Standards Institute, Inc., and the following scope.

> Establishment of the safety requirements relating to the elements of design, operation, and maintenance; standardization relating to principal dimensions to facilitate interchangeability, test methods, and test procedures of powered and nonpowered industrial trucks (not including vehicles intended primarily for earth moving or over-the-road hauling); and maintenance of liaison with the International Organization for Standardization (ISO) in all matters pertaining to powered and nonpowered industrial trucks.

One purpose of the Standard is to serve as a guide to governmental authorities having jurisdiction over subjects within the scope of the Standard. It is expected, however, that the Standard will find a major application in industry, serving as a guide to manufacturers, purchasers, and users of the equipment.

For convenience, Standards for Powered and Nonpowered Industrial Trucks have been divided into separate volumes:

Safety Standards

B56.1	Low Lift and High Lift Trucks
B56.5	Guided Industrial Vehicles
B56.6	Rough Terrain Forklift Trucks
B56.7	Industrial Crane Trucks
B56.8	Personnel and Burden Carriers
B56.9	Operator Controlled Industrial Tow Tractors
B56.10	Manually Propelled High Lift Industrial Trucks

Standardization Standards

B56.11.1	Double Race or Bi-Level Swivel and Rigid Industrial Casters
B56.11.3	Load Handling Symbols for Powered Industrial Trucks
B56.11.4	Hook-Type Forks and Fork Carriers for Powered Industrial Forklift Trucks
B56.11.5	Measurement of Sound Emitted by Low Lift, High Lift, and Rough Terrain Powered Industrial Trucks
B56.11.6	Evaluation of Visibility From Powered Industrial Trucks[1]

Safety standards that were previously listed as B56 volumes but now have different identification due to a change in standards development assignments are as follows.

NFPA 505	Fire Safety Standard for Powered Industrial Trucks – Type Designations, Areas of Use, Maintenance and Operation (formerly B56.2)
UL 583	Standard for Safety for Electric-Battery-Powered Industrial Trucks (formerly B56.3)
UL 558	Standard for Safety for Internal Combustion Engine-Powered Industrial Trucks (formerly B56.4)

If adopted for governmental use, the references to other national standards in the specific volumes may be changed to refer to the corresponding governmental regulations.

The use of powered and nonpowered industrial trucks is subject to certain hazards that cannot be completely eliminated by mechanical means, but the risks can be minimized by the exercise of intelligence, care, and common sense. It is therefore essential to have competent and careful operators, physically and mentally fit, and thoroughly trained in the safe operation of the equipment and the handling of the loads. Serious hazards are overloading, instability of the load, obstruction to the free passage of the load, collision with objects or pedestrians, poor mainte-

[1]B56.11.6 is in the development stage.

Copyright ASME International
Provided by IHS under license with ASME
No reproduction or networking permitted without license from IHS
Not for Resale

nance, and use of equipment for a purpose for which it was not intended or designed.

Suggestions for improvement of these volumes, especially those based on actual experience in their application, shall be submitted to the Secretary of the B56 Committee, ASME, United Engineering Center, 345 East 47th Street, New York, NY 10017.

Comments shall be written in accordance with the following format:

(a) specify paragraph designation of the pertinent volume;

(b) indicate suggested change (addition, deletion, revision, etc.);

(c) briefly state reason and/or evidence for suggested change;

(d) submit suggested changes to more than one paragraph in the order in which they appear in the volume.

The appropriate B56 Subcommittee will consider each suggested revision at its first meeting after receipt of the suggested revision(s).

Copyright ASME International
Provided by IHS under license with ASME
No reproduction or networking permitted without license from IHS
Not for Resale

ASME B56.10 92 ■ 0759670 0528933 220 ■

SAFETY STANDARD FOR MANUALLY PROPELLED HIGH LIFT INDUSTRIAL TRUCKS

PART I INTRODUCTION

1 SCOPE

This Standard defines the safety requirements relating to the elements of design, operation, and maintenance of manually propelled high lift industrial trucks controlled by a walking operator, and intended for use on level, improved surfaces.

2 PURPOSE

The purpose of this Standard is to promote safety through the design, construction, application, operation, and maintenance of manually propelled high lift industrial trucks.

This Standard may be used as a guide by governmental authorities desiring to formulate safety rules and regulations. This Standard is also intended for voluntary use by others associated with manufacturing or use of manually propelled high lift industrial trucks.

3 INTERPRETATION

3.1 Mandatory and Advisory Rules

To carry out the provisions of this Standard, the word *shall* is to be understood as mandatory and the word *should* as recommended.

3.2 Classification of Approved Trucks

The word *approved* means the classification or listing of manually propelled high lift industrial trucks as to fire, explosion, and electric shock hazard by a nationally recognized testing laboratory.

3.3 Requests for Interpretation

The B56 Committee will render an interpretation of any requirement of the Standard. Interpretations will be rendered only in response to a written request sent to the Secretary of the B56 Committee, ASME, 345 East 47th Street, New York, NY 10017. The request for interpretation shall be in the following format.

Subject: Cite the applicable paragraph number(s) and provide a concise description.

Edition: Cite the applicable edition of the pertinent standard for which the interpretation is being requested.

Question: Phrase the question as a request for an interpretation of a specific requirement suitable for general understanding and use, not as a request for approval of a proprietary design or situation.

The inquirer may also include any plans or drawings which are necessary to explain the question; however, they should not contain proprietary names or information.

ASME procedures provide for reconsideration of any interpretation when or if additional information which might affect an interpretation is available. Further, persons aggrieved by an interpretation may appeal to the cognizant ASME Committee or Subcommittee. ASME does not "approve," "certify," "rate," or "endorse" any item, construction, proprietary device or activity.

3.4 Metric Conversions

The values stated in U.S. customary units are to be regarded as the standard.

Copyright ASME International
Provided by IHS under license with ASME
No reproduction or networking permitted without license from IHS
Not for Resale

PART II
FOR THE USER

4 GENERAL SAFETY PRACTICES

4.1 Introduction

4.1.1 Like other vehicles, manually propelled high lift industrial trucks can cause injury if improperly used or maintained.

4.1.2 Part II contains broad safety standards applicable to truck operations. Only operators trained to adhere strictly to the operating instructions stated in Section 5 shall be permitted to operate manually propelled high lift industrial trucks. Unusual operating conditions may require additional safety precautions and special instructions.

4.2 Modifications, Nameplates, Markings, and Capacity

4.2.1 Modifications and additions that affect capacity or safe operation shall not be performed without the manufacturer's prior written approval. Where such authorization is granted, capacity, operation, and maintenance instruction plates, tags, or decals shall be changed accordingly.

4.2.2 If the truck is equipped with attachment(s) including fork extensions, the user shall see that the truck is marked to identify the attachment(s), show the approximate weight of the truck and attachment combination, and show the capacity of the truck with attachment(s) at maximum elevation with load laterally centered.

4.2.3 The user shall see that all nameplates and caution and instruction markings are in place and legible.

4.2.4 The user shall consider that changes in load dimension may affect truck capacity.

4.2.5 Batteries used in manually propelled high lift industrial trucks shall comply with the minimum/maximum battery weight shown on the truck nameplate.

4.3 Floor or Wheel Locks

Floor or wheel locks are intended only to hold the truck in a desired position on a level surface.

4.4 Stability

4.4.1 Experience has shown that manually propelled high lift industrial trucks that comply with the stability requirements stated in para. 7.5 are stable when properly operated. However, improper operation, faulty maintenance, or poor housekeeping may contribute to a condition of instability and defeat the purpose of the Standard.

4.4.2 Some of the conditions that may affect stability are: surface and floor conditions, grade, speed, load position, attachments (trucks equipped with attachments behave as partially loaded trucks even when operated without a load on the attachment), battery weight, dynamic and static forces, and the judgment exercised by the operator.

4.4.3 On battery-electric trucks, use only a battery(s) within the minimum/maximum weight range as specified on truck nameplate.

4.4.4 Users shall give consideration to special operating conditions. The use of a truck in an area shall be governed by the confinements and floor conditions in which the truck will operate. The stability of a truck as determined by the tests outlined in para. 7.5 does not encompass consideration for the operation of trucks with off-center loads or on grades.

4.4.5 Some users may decide to establish, for their own use, stability requirements that will vary from those in para. 7.5. However, the requirements in para. 7.5 should serve as a guide for the user, working with the manufacturer, in establishing his own more stringent requirements.

4.5 Safety Guards

4.5.1 Guards are intended to offer protection to the operator from moving parts but cannot protect against every possible condition. Therefore, they should not be considered a substitute for good judgment and care in use, loading, handling, storage, etc.

4.5.2 Under certain unusual conditions, a stronger guard, or one having openings of smaller size, may be specified by the user, working with the truck manufacturer.

4.5.3 Good judgment and care shall be exercised in handling of loads extending above the mast (see para. 4.5.4).

4.5.4 Load Backrest Extension. If the type of load presents a hazard, the user shall equip the truck

Copyright ASME International
Provided by IHS under license with ASME
No reproduction or networking permitted without license from IHS Not for Resale

with a vertical load backrest extension manufactured in accordance with para. 7.11.

4.6 Changing and Charging Storage Batteries for Electric Trucks

4.6.1 To avoid damage to equipment or injury to personnel, battery changing and charging procedures should be in accordance with the truck manufacturer's instructions.

4.6.2 A charger connector (when furnished) shall be plugged into the battery connector, not the truck connector under any circumstances.

4.6.3 Failure to comply with specified nameplate minimum/maximum battery weight could result in truck instability.

4.6.4 Care shall be exercised at all times when charging battery powered trucks due to the explosive gases given off by the batteries. Any kind of spark or flame near a battery can cause it to explode.

4.6.5 Batteries which remain in manually propelled high lift industrial trucks during charging shall be well-ventilated during the charging period.

4.7 Hazardous Locations

4.7.1 It shall be the responsibility of the user to determine the hazard classification of any particular atmosphere or location according to ANSI/NFPA 505.

4.7.2 Manually propelled high lift industrial trucks operated in hazardous areas shall be approved and of the type required by ANSI/NFPA 505 or applicable user specifications.

4.7.3 Trucks and areas of use shall be marked in accordance with ANSI/NFPA 505.

4.8 Aisles and Obstructions

4.8.1 Permanent aisles, roadways or passageways, floors, and ramps shall be defined in some fashion or marked to conform with ANSI Z53.1.

4.8.2 Permanent or temporary protrusions of loads, equipment, material, and construction facilities into the usual operating area shall be guarded, clearly and distinctively marked, or clearly visible.

4.9 Lighting for Operating Areas

4.9.1 Controlled lighting of adequate intensity should be provided in operating areas in conformance with ANSI/IES RP7.

4.9.2 Where operating conditions indicate, the user shall be responsible for having the truck equipped with lights.

4.10 Sound

4.10.1 Electric-operated manually propelled high lift industrial trucks can contribute to the ambient sound in the work area. Consideration should be given to sound exposure of personnel in the work area.

4.11 Dockboards and Bridge Plates

4.11.1 Portable and powered dockboards and bridge plates shall be marked conspicuously with their carrying capacity. The carrying capacity indicated shall not be exceeded.

4.11.2 Portable dockboards and bridge plates shall be secured in position, either by being anchored or by being equipped with devices that will prevent their slipping.

4.11.3 Handholds or other effective means shall be provided on portable dockboards and bridge plates to permit safe handling.

4.11.4 All types of dockboards and bridge plates shall have a high-friction surface designed to reduce the possibility of employees or trucks slipping.

4.11.5 All types of dockboards and bridge plates shall be designed and maintained so that one end will have a substantial contact with the dock (or loading platform) and the other end with the transport vehicle to prevent the dockboard or bridge plate from rocking or sliding.

4.11.6 All types of dockboards and bridge plates shall be designed and maintained to provide a smooth, level transition from one work area to the other work area.

4.12 Trucks and Railroad Cars

4.12.1 When manually propelled high lift industrial trucks are used on and off highway trucks or trailers during the loading and unloading operation,

Copyright ASME International
Provided by IHS under license with ASME
No reproduction or networking permitted without license from IHS Not for Resale

the brakes on the highway trucks and trailers shall be applied and wheel chock(s), or positive mechanical restraints that provide the equivalent protection of wheel chocks, shall be engaged.

4.12.2 Provision shall be made to prevent railroad cars from being moved during loading and unloading. Wheel stops, hand brakes, or other recognized positive means shall be used to prevent movement during loading and unloading.

4.12.3 Whenever manually propelled high lift industrial trucks are used on and off semitrailers or railroad cars, a smooth, level transition shall be provided.

4.12.4 Maintain a safe distance from the edge of ramps, platforms, or other similar working surfaces.

4.13 Floors and Floor Conditions

4.13.1 Areas of use for manually propelled high lift industrial trucks shall be smooth and level: free of gaps, floor drains, etc.

4.13.2 The floors shall be maintained to keep them free of debris and liquids which hinder safe operation of the truck.

4.13.3 Ramps and inclines shall be avoided in the areas of use.

4.14 Warning Devices

4.14.1 The user shall determine if operating conditions require the truck to be equipped with sound-producing (such as horns or bells) or visual (such as lights or blinkers) devices, and be responsible for providing and maintaining such devices.

4.15 Relocating Manually Propelled High Lift Industrial Trucks

4.15.1 When utilizing lifting equipment such as elevators, cranes, ship hoisting gear, etc., to relocate a manually propelled high lift industrial truck, the user shall ensure that the capacity of the hoisting equipment being used is not exceeded.

4.16 Elevating Personnel

4.16.1 Manually propelled high lift industrial trucks are not intended to be used for the elevation of personnel. However, if the user elects to use trucks for elevating personnel, the following precautions for the protection of personnel shall be taken.

(a) Provide a platform which complies with the design requirements in para. 7.16.2 of this Standard. Only permit its use on a truck which complies with the requirements as specified in para. 7.16.1 of this Standard.

(b) Provide protection for personnel in their normal working position on the platform from moving parts of the truck that represent a hazard.

(c) Provide overhead protection as indicated to be necessary by the operating conditions.

(d) When the lifting carriage and/or forks are supporting the platform used to elevate personnel, the lifting carriage and/or forks are secured to prevent them from pivoting upward.

(e) Have a trained operator in position to control the truck or available to operate controls.

(f) The combined weight of the platform, load, and personnel not to exceed one-half of the capacity at the rated load center as indicated on the truck nameplate of the truck on which the platform is used.

(g) Personnel and equipment on the platform not to exceed the available space. Adequate room for personnel shall be provided so that personnel and/or equipment do not extend over the edge of the platform or require that personnel sit or stand on equipment being lifted.

4.17 Operator Qualifications

4.17.1 Only authorized personnel shall be permitted to operate a manually propelled high lift industrial truck. Operators of manually propelled high lift industrial trucks shall be qualified as to visual, auditory, physical, and mental ability to operate the equipment safely according to para. 4.18 and all other applicable parts of Section 4.

4.18 Operator Training

4.18.1 The user shall ensure that operators understand that safe operation is the operator's responsibility. The user shall also ensure that operators are knowledgeable of, and observe, the safety rules and practices in Section 5.

4.18.2 An effective operator training program should center around user company's policies, operating conditions, and trucks. The program should be presented completely to all new operators and not condensed for those claiming previous experience.

Copyright ASME International
Provided by IHS under license with ASME
No reproduction or networking permitted without license from IHS
Not for Resale

ASME B56.10 92 ■ 0759670 0528937 976 ■

4.18.3 Information on operator training may be available from several sources, including truck manufacturers, users, government agencies, etc.

4.18.4 An operator training program should consist of the following:

(a) careful selection of the operator, considering physical qualifications, job attitude, and aptitude;

(b) emphasis on safety of operator, other personnel, material being handled, and equipment. Citing of rules and why they are formulated.

(c) basic fundamentals of truck and component design as related to safety, e.g., load center loading, mechanical limitations, center of gravity, stability, etc.;

(d) introduction to equipment, control locations, and functions. Explain how they work when used properly and problems when they are used improperly.

(e) supervised practice on an operating course remote from normal activity designed to simulate actual plant operations, e.g., load engagement, rack loading and unloading, floor operation, hazard observation, etc.;

(f) oral, written, and operational performance tests and evaluations during, and at completion of, the course;

(g) refresher courses, which may be condensed versions of the primary course, and periodic, on-the-job operator evaluation;

(h) understanding of nameplate data and operator instructions, and warning information appearing on the truck;

(i) reading and understanding of manufacturer's instruction manual.

5 OPERATING SAFETY RULES AND PRACTICES

5.1 Operator Responsibility

5.1.1 Safe operation is the responsibility of the operator.

5.1.2 The operator shall develop safe working habits and also be aware of hazardous conditions in order to protect himself, other personnel, the truck, and other material.

5.1.3 The operator shall be familiar with manufacturer's operating instructions and warnings on the truck.

5.1.4 The operator shall be familiar with the operation and function of all controls and instruments before undertaking to operate the truck.

5.1.5 Before operating any truck, truck operators shall have read and be familiar with the manufacturer's operator's manual for the particular truck being operated, and they shall also abide by the safety rules and practices in paras. 5.2 through 5.5.

5.2 General

5.2.1 Before starting to operate the truck:

(a) be in operating position;

(b) for electric trucks, turn control switch to ON position;

(c) raise carriage or forks a minimum distance above the floor;

(d) release floor or wheel lock(s).

5.2.2 Do not operate the truck, or any of its functions or attachments, from any place other than the operator's position.

5.2.3 Keep feet clear of truck. Foot protection is recommended.

5.2.4 Never put any part of the body into the mast structure, lifting mechanism, or carriage.

5.2.5 Understand truck limitations and operate the truck in a safe manner so as not to cause injury to personnel. Safeguard pedestrians at all times.

(a) Do not maneuver a truck up to anyone standing in front of an object.

(b) Exercise particular care at cross-aisles, doorways, and other locations where pedestrians may step into the path of travel of the truck.

5.2.6 Do not allow anyone to stand or pass under the elevated portion of any truck, whether empty or loaded.

5.2.7 Do not permit passengers to ride on the carriage or forks.

5.2.8 When parking the truck:

(a) bring the truck to a complete stop;

(b) lower the carriage or forks fully;

(c) on electric trucks, turn off the controls (when provided);

(d) apply the floor or wheel lock(s);

(e) never park the truck on an incline.

5.2.9 Maintain a safe distance from ramps, edge of platforms, and other similar working surfaces.

Copyright ASME International
Provided by IHS under license with ASME
No reproduction or networking permitted without license from IHS
Not for Resale

5.2.10 When manually propelled high lift industrial trucks are used on and off trucks and trailers, the brakes on the truck or trailers shall be applied and wheel chock(s) or positive mechanical restraints that provide the equivalent protection of wheel chocks shall be engaged.

5.2.11 Provision shall be made to prevent railroad cars from being moved during loading and unloading. Wheel stops, hand brakes, or other recognized positive means shall be used to prevent movement of the railroad cars during loading and unloading.

5.2.12 Care shall be taken not to contact overhead installations such as lights, wiring, pipes, sprinkler systems, etc.

5.2.13 Good judgment and care shall be exercised in handling of loads extending above the mast.

5.2.14 A load backrest extension shall be used when necessary to guard against a load, or part of it, from falling toward the operator.

5.2.15 In areas classified as hazardous, use only trucks approved for use in those areas.

5.2.16 Report all accidents involving personnel, building structures, and equipment to the supervisor or as directed.

5.2.17 Do not add to, or modify, the truck.

5.2.18 Do not block access to fire aisles, stairways, or fire equipment.

5.2.19 Whenever a truck is used to elevate personnel:

(a) check to see if it is rated for this service in accordance with para. 7.16;

(b) all position holding and stabilizing devices specified by the manufacturer shall be in place and engaged;

(c) be certain that required restraining means such as the guardrail system specified in para. 7.16.2(c) are in place and properly used;

(d) be certain that the lifting mechanism is operating smoothly throughout its entire lift height, both empty and loaded, and that all lift-limiting devices and latches, if provided, are functional;

(e) the platform attachment means are applied and the platform is securely attached to the lifting carriage or forks;

(f) the mast is vertical — do not operate on a slope;

(g) the platform is horizontal and centered;

(h) the truck has a firm and level footing;

(i) before elevating personnel, mark area with cautionary devices to warn of work by elevated personnel;

(j) lift and lower personnel smoothly and only at their request;

(k) watch for overhead obstructions and electric wires;

(l) keep hands and feet clear of controls other than those in use;

(m) do not move truck and/or platform horizontally when personnel are on the platform;

(n) personnel are to remain on the platform floor, use of railings, planks, ladders, etc., on the platform for purpose of achieving additional reach or height is prohibited;

(o) lower platform completely for personnel to enter and exit. Do not climb on any part of the truck in attempting to enter and exit.

5.3 Traveling

5.3.1 Observe all traffic regulations. Under normal traffic conditions, keep to the right. Maintain a safe distance from the truck or pedestrians ahead; and keep the truck under control at all times.

5.3.2 Keep hands and feet directly behind the operator's designated area with both hands on the push handle.

5.3.3 Yield the right of way to pedestrians, emergency vehicles, and powered industrial trucks.

5.3.4 Do not pass another truck traveling in the same direction at intersections, blind spots, or other dangerous locations.

5.3.5 Slow down or stop at cross-aisles and other locations where vision is obstructed.

5.3.6 Do not travel on ramps or inclines.

5.3.7 Keep a clear view of the path of travel and observe for other traffic, personnel, and safe clearances.

5.3.8 Under all travel conditions, operate the truck in a manner that will permit full control at all times and will permit stopping in a safe manner.

5.3.9 Travel with the carriage or forks in the lowest position possible.

5.3.10 Make starts, stops, turns, and direction reversals in a smooth manner so as not to shift load and/or overturn the truck.

Copyright ASME International
Provided by IHS under license with ASME
No reproduction or networking permitted without license from IHS Not for Resale

ASME B56.10 92 ■ 0759670 0528939 749 ■

5.3.11 Do not indulge in stunt handling or horseplay.

5.3.12 Be cautious on wet and slippery floors.

5.3.13 Avoid traveling over debris on floors.

5.3.14 Before traveling over a dockboard or bridge plate, be sure that it is properly secured and level. Travel carefully and slowly across the dockboard or bridge plate, and never exceed its rated capacity.

5.3.15 Do not place trucks onto any elevator unless specifically authorized to do so. Approach elevators slowly, and then enter squarely after the elevator car is properly leveled. Once on the elevator, shut off power, if equipped, and set the floor or wheel lock(s). It is advisable that all other personnel leave the elevator before the truck is allowed to enter or leave.

5.3.16 Avoid traveling over openings in the floor.

5.4 Loading

5.4.1 Handle only stable and safely arranged loads within the capacity of the truck.

5.4.2 When attachments are used, extra care shall be taken in securing, manipulating, positioning, and transporting the load. Operate trucks equipped with attachments as partially loaded trucks when not handling a load. Consult the truck nameplate for the truck and attachment capacity.

5.4.3 Completely engage the load with the load-engaging means. Fork length(s) should be at least two-thirds of the load length.

5.4.4 Use extreme care when lifting mechanism is elevated. Always keep forward, backing, and turning movement to a minimum when tiering.

5.4.5 The handling of suspended loads by means of a boom or other device can introduce forces affecting the stability of a truck that are not considered in the stability criteria of para. 7.5. Sudden starts, stops, and turns can cause a load to swing and create a hazard.

When handling suspended loads:

(a) do not exceed the truck manufacturer's capacity of the truck as equipped for handling suspended loads;

(b) only lift the load vertically and never drag it horizontally;

(c) transport the load with the bottom of the load and the mast as low as possible;

(d) with the load elevated, maneuver the truck slowly and cautiously, and only to the extent necessary to permit lowering to the transport position;

(e) use guy lines to restrain load swing whenever possible.

5.5 Operator Care of the Truck

5.5.1 At the beginning of each shift and before operating the truck, check its condition, giving special attention to the following:

(a) wheels and casters;

(b) warning devices, if equipped;

(c) guards;

(d) battery(s), if battery-electric;

(e) controls;

(f) lift systems, load-engaging means, chains, cables, and limit switches;

(g) floor or wheel lock(s);

(h) steering mechanism, if equipped.

5.5.1.1 If the truck is found to be in need of repair or in any way unsafe, or contributes to an unsafe condition, the matter shall be reported immediately to the user's designated authority, and the truck shall not be operated until it has been restored to safe operating condition.

5.5.2 If during operation the truck becomes unsafe in any way, the matter shall be reported immediately to the user's designated authority, and the truck shall not be operated until it has been restored to safe operating condition.

5.5.3 Do not make repairs or adjustments unless specifically authorized to do so.

5.5.4 If authorized to charge the truck's battery(s) (when equipped), check the electrolyte level for proper level and the battery compartment vents for clear passage of air prior to plugging the charging unit into its power source.

5.5.5 Do not use open flames when checking electrolyte level in storage batteries.

6 MAINTENANCE AND REBUILD PRACTICES

6.1 Manually propelled high lift industrial trucks may become hazardous if maintenance is neglected or repairs, rebuilds, or adjustments are performed contrary to the manufacturer's design criteria. Therefore, maintenance facilities (on or off premises), trained personnel, and explicit procedures shall be utilized.

Copyright ASME International
Provided by IHS under license with ASME
No reproduction or networking permitted without license from IHS
Not for Resale

6.1.1 Parts and maintenance manuals shall be obtained from the truck manufacturer.

6.1.2 In unusual cases not covered by the manuals referred to in para. 6.1.1, consult the truck manufacturer.

6.2 Maintenance and inspection of all manually propelled high lift industrial trucks shall be performed in conformance with the following practices. In addition, maintenance and inspection should be performed in accordance with the manufacturers' and users' recommendations.

(a) A scheduled planned maintenance, lubrication, and inspection system shall be followed;

(b) Only trained and authorized personnel shall be permitted to maintain, repair, adjust, and inspect manually propelled high lift industrial trucks.

6.2.1 When lifting trucks for repair or inspection, trucks shall be lifted in a safe, secure, stable manner. Removal of components such as counterweights or uprights will change the center of gravity and may create an unstable condition.

6.2.2 Before starting inspection and repair of a truck:

(a) disconnect battery (if provided) and use chocks or other positive truck holding devices;

(b) block load-engaging means, innermast(s), or chassis before working on them;

(c) disconnect power before working on the electrical system (if provided).

6.2.3 Operation of the truck to check performance shall be conducted in an authorized area where safe clearance exists.

6.2.4 Avoid fire hazards and have fire protection equipment present in the work area. Do not use an open flame to check the level or to check for leakage of any fluid, especially battery electrolyte. Do not use open pans of fuel or flammable cleaning fluids for cleaning parts.

6.2.5 Properly ventilate work area and keep it clean and dry.

6.2.6 Special trucks or devices designed and approved for hazardous area operation shall receive special attention to ensure that maintenance preserves the original, approved safe operating features.

6.2.7 Care shall be taken to ensure that all replacement parts are interchangeable with the original parts and equal to that provided in the original equipment.

6.2.8 Wheels, casters, floor or wheel locks, steering mechanisms, control mechanisms, fastening and warning devices, lights, lift overload devices, guards and safety devices, lift/lower mechanisms, and frame members shall be carefully and regularly inspected and maintained in safe operating condition.

6.2.9 Forks (when provided) shall be inspected regularly for cracks, damage, or permanent deformation that would impair safe use. Any fork displaying such defects shall be replaced or withdrawn from service until satisfactorily repaired by the fork manufacturer or expert of equal competence. A fork that has been repaired shall not be returned to service until it complies with the requirements of para. 7.10.2, Fork Strength.

6.2.10 Lift chains (when provided) shall be inspected regularly. Chain found to have cracked, broken, or missing link plates; to have protruding, turned or seized pins; or, to be significantly corroded, shall be replaced, in pairs if so provided. New chain anchor pins shall be installed when chain(s) are replaced.

6.2.11 Wire rope (when provided) shall be inspected regularly. Any rope found to have a marked reduction in diameter, excessive abrasion of outside wires, broken wires, damage, or, to be significantly corroded, shall be replaced.

6.2.12 All hydraulic systems shall be regularly inspected and maintained in conformance with good practice. Hydraulic cylinders, valves, hoses, fittings, and other hydraulic components shall be checked to ensure that *drift* or leakage has not developed to the extent that it would create a hazard.

6.2.13 Batteries, motors, limit switches, protective devices, electrical conductors, and connections shall be inspected and maintained in conformance with good practice. Special attention shall be paid to the condition of electrical insulation.

6.2.14 When changing batteries on battery-electric trucks, replacement batteries shall be within the minimum/maximum weight range specified on the truck nameplate by the truck manufacturer.

6.2.15 Trucks shall be kept in a clean condition to minimize fire hazards and facilitate detection of loose or defective parts.

6.2.16 The truck manufacturer's capacity, opera-

Copyright ASME International
Provided by IHS under license with ASME
No reproduction or networking permitted without license from IHS
Not for Resale

ASME B56.10 92 ■ 0759670 0528941 3T7 ■

tion, and maintenance instruction plates, tags, or decals shall be maintained in legible condition.

6.2.17 Modifications and additions that affect capacity and safe truck operation shall not be performed without manufacturer's prior written approval. Capacity, operation, and maintenance instruction plates, tags, or decals shall be changed accordingly.

PART III
FOR THE MANUFACTURER

7 DESIGN AND CONSTRUCTION STANDARDS

7.1 Introduction

Part III sets forth safety standards for the design and construction of manually propelled high lift industrial trucks at the time of manufacture.

7.2 Operation and Maintenance Instructions

The manufacturer shall provide instructions covering the operation and maintenance of the specific type of truck.

7.3 Capacity

7.3.1 Capacity shall be established with a load equivalent to an unrestrained homogeneous cube, with overall dimensions twice the specified load center distance.

7.3.2 Capacity shall be based on the strength of the various components of the truck and on stability tests specified in para. 7.5, and shall be expressed in pounds (kilograms), at a specified load center distance in inches (millimeters), that a truck can transport and stack to a specified elevation of the load-engaging means.

7.3.3 If trucks are equipped with attachments, the capacity shall be established by the truck manufacturer and expressed in pounds (kilograms) at a specified load center and for a specified load elevation.

7.4 Nameplates and Markings (See Para. 7.3)

7.4.1 The manufacturer shall stamp or otherwise permanently affix the serial number to the frame of the truck.

7.4.2 On every truck, the manufacturer shall install a durable, corrosion resistant nameplate(s), legibly inscribed with the following information:

(a) truck model and truck serial number;

(b) approximate weight of truck;

(c) designation of compliance with the mandatory requirements of this Standard, applicable to the manufacturer;

(d) type designation to show conformance with the requirements, such as those prescribed by Underwriters Laboratories, Inc., and Factory Mutual Research Corp.

(e) If the truck is equipped with a platform or load carriage and forks, the nameplate shall also show the capacity and load center at maximum elevation of the truck load-engaging means. In addition, capacities at other load centers and load elevations may be shown.

(f) If the truck is originally equipped with front end attachment(s), the truck nameplate shall also be marked to identify the attachment(s) and show the approximate weight of the truck and attachment combination and capacity of the truck and attachment combination at maximum elevation of the load-engaging means with load laterally centered.

7.4.3 On manually propelled high lift industrial trucks with batteries, the nameplate shall also show the following:

(a) truck weight with battery;

(b) minimum/maximum service weight of the battery to be used;

(c) nominal voltage for which truck is arranged;

7.4.4 For trucks designated type EX, the class and group of hazardous locations in which they are intended to be used shall be shown on the truck.

7.4.5 On every removable attachment (excluding fork extensions), the attachment manufacturer shall install a durable, corrosion resistant nameplate, with the following information legibly and permanently inscribed:

(a) model designation

(b) serial number

(c) maximum hydraulic pressure (on hydraulically actuated attachments)

(d) weight

(e) capacity

(f) the following instruction (or equivalent): Capacity of Truck and Attachment Combination May Be Less Than Capacity Shown on Attachment. Consult Truck Nameplate.

Copyright ASME International
Provided by IHS under license with ASME
No reproduction or networking permitted without license from IHS
Not for Resale

7.5 General Stability Criteria

7.5.1 Manually propelled high lift industrial trucks shall meet the design stability requirements set forth.

7.5.2 Design stability is the measure of a truck's resistance to overturning under rigidly controlled static conditions that include consideration for dynamic factors encountered in normal application and operation. Factors that may influence stability include weight, weight distribution, wheelbase, wheel tread, method of suspension, and tire and mast deflection under load.

7.5.3 Stability shall be determined by one of the following methods.

(a) Tilting Platform Tests. The tests described verify truck stability. They may be used for confirming lift truck design and are intended to be applied to prototype trucks, but may also be applied to production trucks on a selective basis as required by the user or manufacturer.

(b) Calculated Stability Values. Calculations based on empirical data for similar trucks that include allowance for manufacturing variations and tire, mast, carriage, attachment, and other deflections, may be used to predict stability with reasonable accuracy.

(c) When comparing calculated and test values, the test values are considered the true measure of stability.

7.5.4 General Suggestions for Conducting Tilting Platform Tests

(a) The test shall be conducted on a completely operational truck.

(b) The test platform shall have a rigid, flat surface; otherwise, measurements or effect of slope may be erratic.

(c) The truck being tested shall be placed on a platform that is initially in a horizontal plane and in the position specified for each of the required tests.

(d) The platform shall be tilted to the slope specified for each of the required tests.

(e) The truck is considered stable if it does not overturn when the test platform is tilted to the specified platform slope values. Overturn is defined as the point at which the truck completely tips over, not the point at which a wheel(s) leaves the platform or the truck frame contacts the platform.

(f) When placed on the forks, the center of mass of the test weight shall be located on the longitudinal center line of the truck.

(g) The coefficient of friction of the platform surface may be increased, if necessary, by an appropriate friction-increasing material.

(h) The truck may be immobilized by the use of $^1/_2$ in. (12 mm) high chocks to maintain truck position on the test platform.

(i) When attachments are supplied as original equipment, the truck shall be equipped with the attachment, and the test load shall be representative of the capacity of the truck with attachment.

7.5.5 Test Procedure Considerations

(a) Special precautions should be taken to prevent complete overturning of the truck or the displacement of the test load during the course of the tests. Provisions for preventing total overturning of the truck should impose no measurable restriction on the truck until the overturning moment occurs.

(b) Be certain of maintaining an accurate load center when the platform is tilted.

(c) Although the test load shall not be restrained in any manner that will affect the deflection of the forks or mast or free movement of the truck as the platform is tilted, the test load shall be secured against possible sliding on the forks in order to sustain an accurate load center and for safety reasons, in case the truck tips past the balance point.

(d) For tests requiring an elevated load, it is permissible to simulate a load by hanging the test load from a framework supported by the forks in the manner described in (c) above. This point of suspension shall be on the center line of the truck and at a height above the forks and at a distance from the front face of the forks equal to the rated load center dimension before the weight of the test load has caused the forks to deflect. The point of suspension shall be free to pivot in any direction, such as by use of chain or cable.

(e) It is also permissible to use two test loads of equal weight suspended from the ends of a transverse beam fastened to framework supported by the forks as described in (c) above, provided the loads are suspended from points equidistant from the center dimension before the weight of the test load has caused the forks to deflect. The points of suspension shall be free to pivot in any direction, such as by use of chain or cable. The transverse beam shall be strong enough to prevent deflection that would shift the load center.

(f) If the test load is to be supported on top of the forks, care shall be taken to see that it contacts the front face of the forks adjacent to the heel. For this purpose, the edge of the test load shall be chamfered to clear the radius at the heel of the fork.

(g) Upon completion of the tests, checks shall be

Copyright ASME International
Provided by IHS under license with ASME
No reproduction or networking permitted without license from IHS
Not for Resale

made to make sure the center of gravity of the load has not changed from the original position.

(h) On pneumatic tire trucks, inflation of all tires shall be checked to make sure they are in accordance with the truck manufacturer's recommendations. This is essential to provide accurate and repeatable results.

7.5.6 Test Load. The test load shall be such that its action corresponds to that of a homogeneous cube, the dimensions of which are twice the designated load center distance D [see Table 1, sketch (1), and para. 7.3].

7.6 Manually Propelled High Lift Industrial Trucks — Tilting Platform Tests

7.6.1 Scope. The tests established in Table 1 set forth stability requirements to verify the capacity.

7.6.2 Test Conditions:

(a) the general criteria contained in para. 7.5;

(b) place casters in position of least stability.

7.7 Propelling and Steering Arrangements

7.7.1 A handle(s) shall be provided to propel and steer the truck.

7.7.2 A propelling and steering device (e.g., fifth wheel) may be provided in addition to or in lieu of the handle(s) specified in para. 7.7.1.

7.8 Floor or Wheel Lock(s)

7.8.1 Floor or wheel lock(s) shall be provided to maintain position of the truck on a flat level surface.

7.9 Load-Handling Controls

7.9.1 Load-handling controls shall be clearly and durably identified on the control or in close proximity to indicate function(s) and direction of motion of load or equipment.

7.10 Forks

7.10.1 Forks shall be designed to avoid unintentional unhooking and/or excessive lateral movement.

7.10.2 Fork strength shall permit the following loading and method of test.

(a) The test load F shall correspond to two times the load rating of the fork and shall be applied to it at the applicable distance D from the front face of the fork (see Fig. 1).

(b) The fork shall be restrained in a manner identical to that used on the truck.

(c) The test load shall be applied twice, gradually and without shock, and maintained for 30 sec each time.

(d) The fork shall be checked before and after the second application of the test load. It shall not show any permanent deformation.

7.10.3 These tests are intended to be applied to prototype forks but may also be applied to production forks on a selective basis as required by the user or manufacturer.

7.11 Load Backrest Extension

7.11.1 The load backrest extension, if provided, should have height, width, and size of openings sufficient to minimize the possibility of the load falling toward the mast.

7.11.2 The load backrest extension, if provided, shall be constructed in a manner that does not interfere with good visibility, and size of openings should not exceed 6 in. (150 mm) in one of the two dimensions.

7.12 Guards for Moving Parts

The operator, in the normal operating position, shall be protected from moving parts that represent a hazard.

7.13 Overtravel Limits

Provision shall be made to prevent travel of mechanical systems beyond that intended by design.

7.14 Pedal and Platform Surfaces

Control pedals and platforms stood on, or engaged by the operator's feet shall have slip-resistant surfaces.

7.15 Warning Devices

Devices (visible or audible), suitable for the intended area of use, may be installed when requested by the user.

Copyright ASME International
Provided by IHS under license with ASME
No reproduction or networking permitted without license from IHS
Not for Resale

TABLE 1 MANUALLY PROPELLED HIGH LIFT TRUCKS

Test Number	M1	M2	M3
Test	Forward longitudinal	Lateral	Rearward longitudinal
Operation	Stacking	Stacking	Stacking
Load	Test load	Test load	None
Load Center D	Designated	Designated	None
Lift Height	Maximum	Maximum	Maximum
Platform Slope, %	4	6	10
Floor or Wheel Lock(s)	Applied or not applied, whichever provides the least stability.		

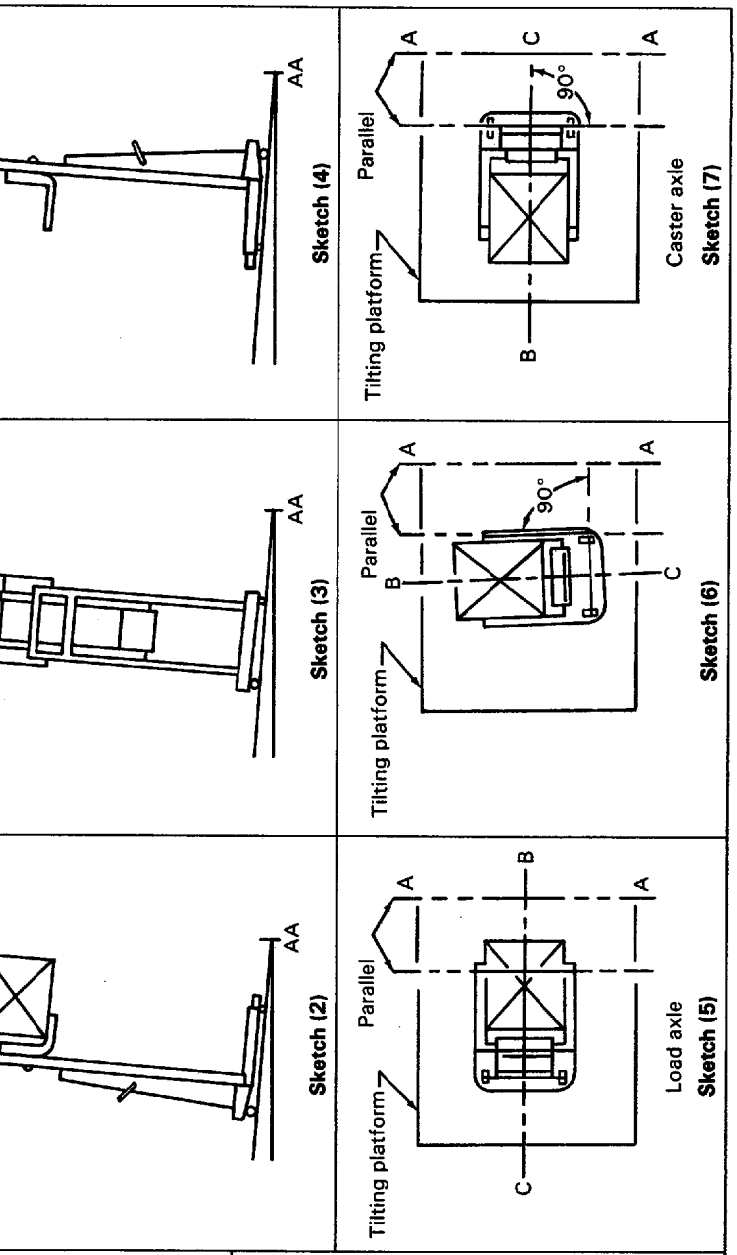

A-A = Tilt axis
C-B = Center line of truck

Copyright ASME International
Provided by IHS under license with ASME
No reproduction or networking permitted without license from IHS

Not for Resale

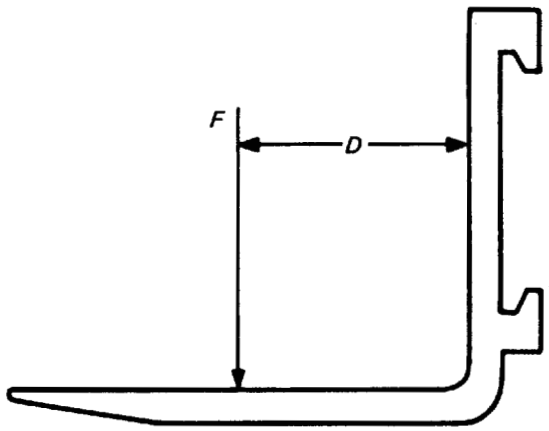

FIG. 1 TYPICAL FORK

7.16 Elevating Personnel

7.16.1 Trucks intended to elevate personnel shall be equipped with a platform conforming to para. 7.16.2 and meet the following additional requirements.

(a) Where the elevation of the platform is accomplished by a hydraulic or pneumatic cylinder assembly, the system shall include a means to prevent unintended descent in excess of 120 ft/min (0.6 m/s) in the event of failure of a hydraulic or pneumatic line.

(b) Where the elevation of the platform is accomplished by a single hoist cable, the system shall be protected by a broken-cable safety device to prevent unintended descent in excess of 120 ft/min (0.6 m/s).

(c) Where the elevation of the platform is accomplished by a manual-mechanical or manual-hydraulic assembly, the considerations established by (a) and (b) above shall apply.

(d) The control system shall be designed so that a single malfunction in the control system will not result in unintended machine motion or the truck shall be equipped with a means readily accessible to the operator in the normal operating position to shut off all power to the truck.

(e) Stability

(1) Truck and platform, when raised to its maximum working height, on level ground, shall be capable of sustaining, without reaching instability, a minimum horizontal test force of 50 lb or 15% of the rated capacity, whichever is greater, applied to any point on the perimeter of the platform while the platform is supporting the rated work load.

(2) The truck and platform at any point in its full working range, on level ground, shall be capable of sustaining, without reaching instability, a vertical test force one-and-one-half times the rated work load. The center of gravity of the test force shall be placed anywhere 12 in. (300 mm) inside the perimeter of the platform.

(3) If outriggers or stabilizers must be employed to meet the above tests, the truck operating instructions shall require their use.

(f) A structural safety factor of not less than 2 to 1 based on the minimum yield strength of the materials shall be used for all load-supporting structural elements and platform attachment means.

7.16.2 Platforms used for elevating personnel shall have the following:

(a) a slip-resistant floor surface;

(b) protection for personnel in their normal working position on the platform from moving parts of the truck that represent a hazard;

(c) a guardrail system or similar structure which shall have a normal height above the platform floor of not less than 36 in. (900 mm) nor more than 42 in. (1100 mm) around its upper periphery and include a midrail. Access openings, when provided, shall be protected by hinged, removable, or chain type guardrail if proper positioning is easily accomplished and a secured condition is discernible. Such restraining means shall be capable of withstanding a concentrated horizontal force of 200 lb (890 N) applied at the point of least resistance without permanent deformation.

(d) 4 in. (100 mm) minimum height toeboards on all sides. Toeboards may be omitted at the access openings.

(e) the floor of the platform located not more than 8 in. (200 mm) above the upper face of the supporting truck fork;

(f) means to securely attach the platform to the lifting carriage or forks, and to prevent the lifting carriage or forks from pivoting upward;

(g) means to correctly locate the platform, centered laterally on the truck;

(h) floor dimensions that do not exceed 2 times the load center distance listed on the truck nameplate, measured parallel to the longitudinal center plane of the truck, nor have a width greater than the overall width of the truck (measured across the load bearing tires) plus 10 in. (250 mm) on either side;

(i) when controls are supplied for use on the ele-

Copyright ASME International
Provided by IHS under license with ASME
No reproduction or networking permitted without license from IHS
Not for Resale

vating platform, they shall be readily accessible to the operator, protected from damage and inadvertent actuation, and have provision to shut off power to the truck. A manual lowering means operable from the ground shall be provided.

(j) an overhead guard manufactured in accordance with the requirements of ASME/ANSI B56.1, when requested by the user.

(k) a combined weight of platform, load, and personnel not to exceed one-half of the capacity at the specified load center as indicated on the truck nameplate on which the platform is used;

(l) in addition to the information required in para. 7.4.5, the following information shall be prominently indicated on the platform:

(1) maximum load including personnel and equipment;

(2) weight of empty platform.

Copyright ASME International
Provided by IHS under license with ASME
No reproduction or networking permitted without license from IHS
Not for Resale

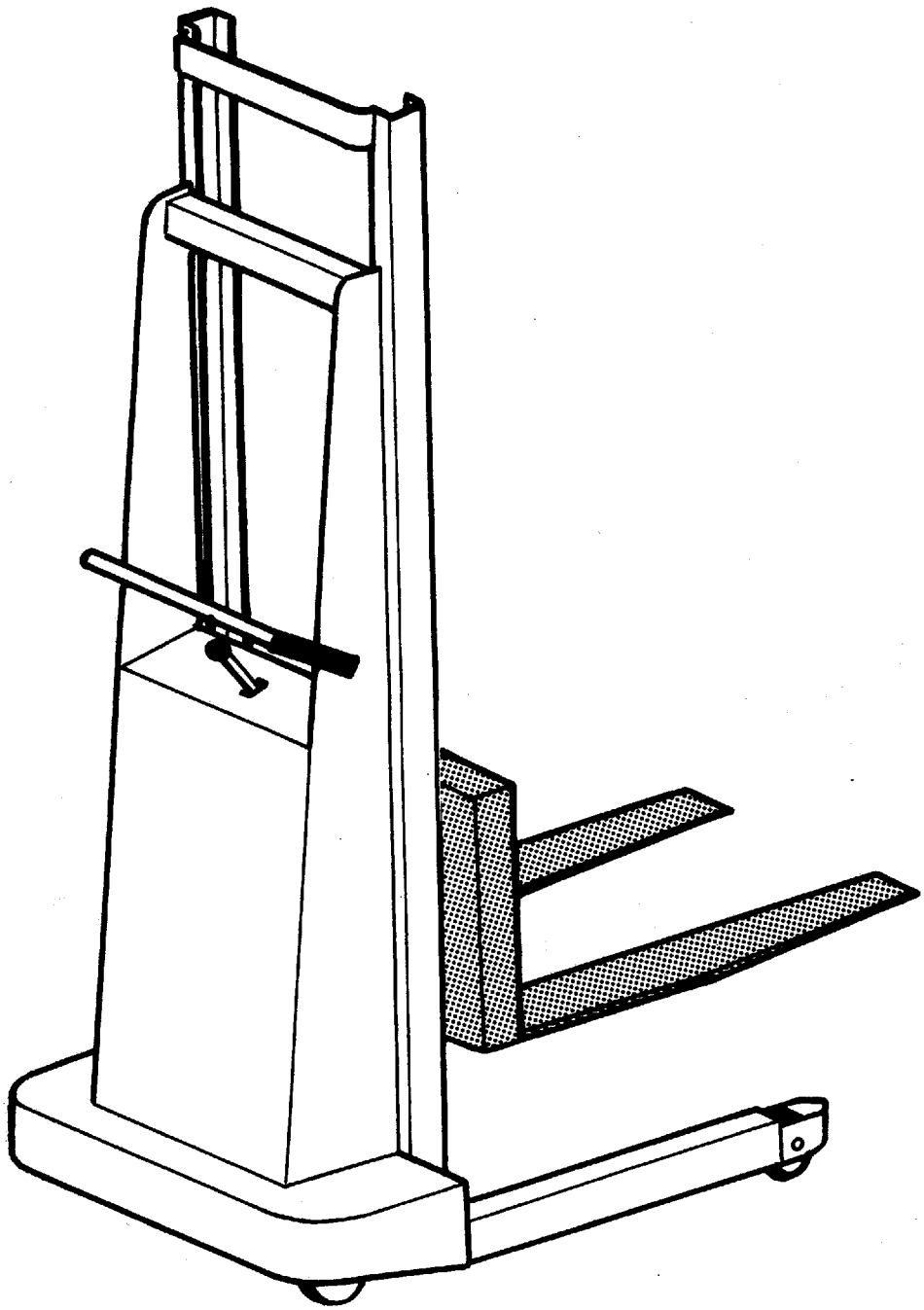

FIG. 2 MANUALLY PROPELLED HIGH LIFT INDUSTRIAL TRUCK (Nontelescopic)

Copyright ASME International
Provided by IHS under license with ASME
No reproduction or networking permitted without license from IHS
Not for Resale

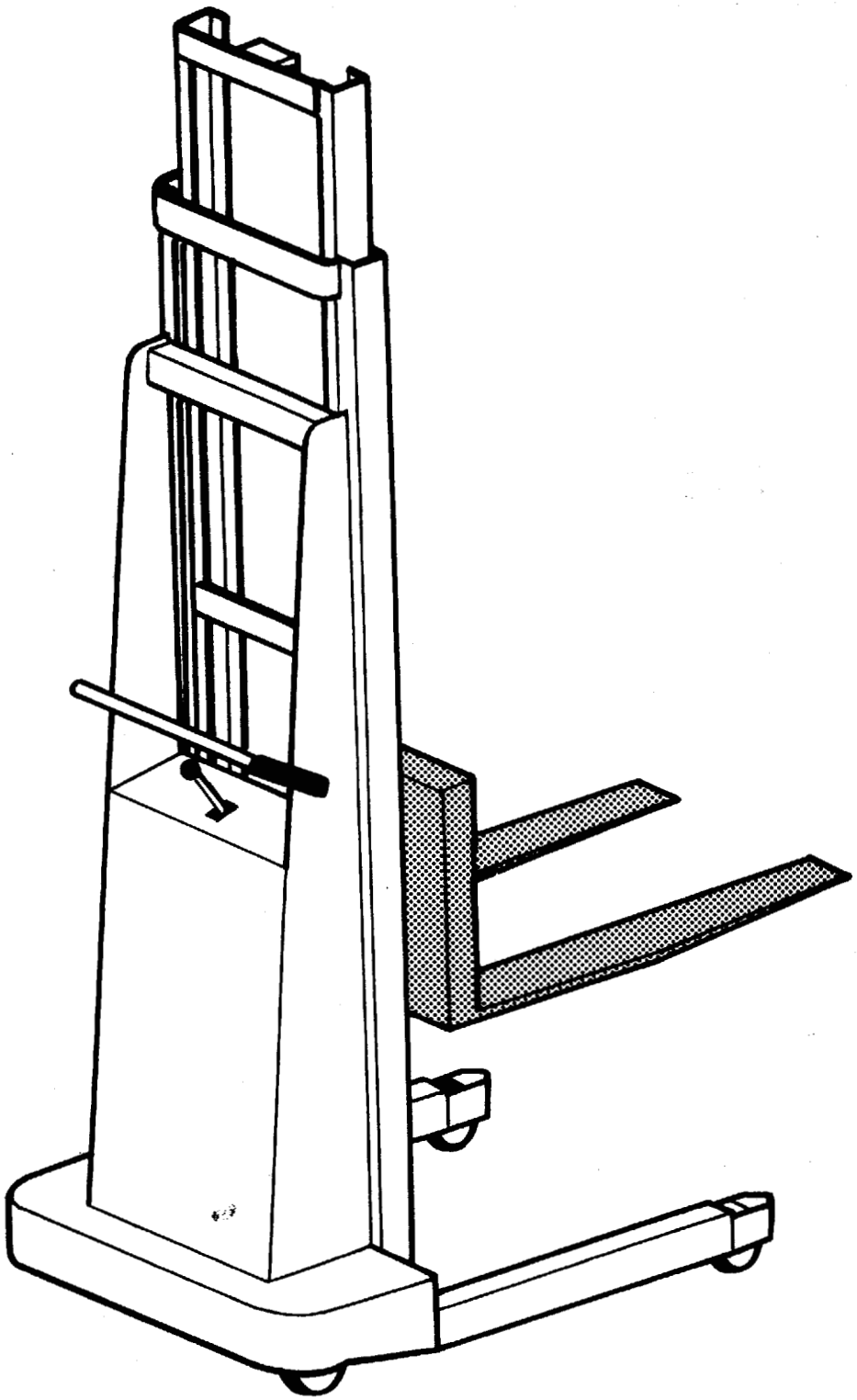

FIG. 3 MANUALLY PROPELLED HIGH LIFT INDUSTRIAL TRUCK (Telescopic)

Copyright ASME International
Provided by IHS under license with ASME
No reproduction or networking permitted without license from IHS
Not for Resale

APPENDIX A
REFERENCES

(This Appendix is an integral part of ASME B56.10-1992 and is placed after the main text for convenience.)

The following are safety standards and codes (unless otherwise noted) referenced within this Standard. It is the intent of this Standard to refer to the standards and codes listed below in their latest edition when they are referenced within the Standard.

ASME/ANSI B56.1-1988	Safety Standard For Low Lift and High Lift Trucks
ANSI/NFPA 505-1987	Powered Industrial Trucks, Including Type Designations, Areas of Use, Maintenance, and Operation
ANSI/IES RP7-1983	Practice For Industrial Lighting (not a safety standard)
ANSI Z53.1-1979	Safety Color Code For Marking Physical Hazards

Copies of the publications listed above are available from:

American National Standards Institute, Inc. (ANSI)
11 West 42nd Street
New York, NY 10036

The American Society of Mechanical Engineers (ASME)
345 East 47th Street, New York, NY 10017
ASME Order Department
22 Law Drive, Box 2300, Fairfield, NJ 07007-2300

National Fire Protection Association (NFPA)
Batterymarch Park, Quincy, MA 02269

Copyright ASME International
Provided by IHS under license with ASME
No reproduction or networking permitted without license from IHS Not for Resale

APPENDIX B
GLOSSARY OF COMMONLY USED WORDS AND PHRASES

(This Appendix is not an integral part of ASME B56.10-1992 and is included for information purposes only.)

attachment — a device other than conventional forks or load backrest extension, mounted permanently or removably on the elevating mechanism of a truck for handling the load. Examples are fork extensions, clamps, rotating devices, work platforms, load stabilizers, rams, and booms.

authorized personnel — persons who have been trained in the operation and/or maintenance of the equipment and designated by the user to operate or maintain the equipment

battery-electric truck — see *truck, battery-electric*

boom — a cantilevered member attached to the lift carriage at one end with a load-engaging means at the other

bridge plate — a portable device for spanning the gap between two rail cars

carriage — a support structure for forks or attachments, generally roller mounted, traveling vertically within the mast

center of gravity (of load) — that point at which the load mass in concentrated. It is located horizontally by its distance from the vertical fork face and vertically by its distance above the load-bearing surface of the forks, or equivalents for other load-engaging means. Except where otherwise indicated, this point is located in the vertical plane of the truck's longitudinal center line.

dockboard — a portable or fixed device for spanning the gap between loading platforms and transport vehicles

electric truck — see *truck, electric*

fifth wheel — a device which may be part of or added to a manually propelled truck to provide ease of horizontal movement and steering, and improved maneuverability

fork extension — a lift truck attachment that is added to the truck fork to increase the fork's effective length for handling oversized, uniformly distributed loads

forks — horizontal tine-like projections, normally suspended from the carriage, for engaging and supporting loads

guy — a rope used to steady or secure a swinging or moving load in the desired position

load backrest — that portion of the carriage and forks serving to restrain the load

load backrest extension — a device that increases the load restraining area beyond that provided by the load backrest

load center — the horizontal longitudinal distance from the intersection of the horizontal load carrying surfaces and vertical load-engaging faces of the forks (or equivalent load-positioning structure) to the center of gravity of the load

manually propelled high lift industrial truck — see *truck, manually propelled high lift industrial*

mast — the support member providing the guideways permitting vertical movement of the carriage. It is usually constructed in the form of channels or similar sections providing the supporting pathway for the carriage rollers.

operator — a trained and authorized person who controls any function(s) of a manually propelled high lift industrial truck

overhead guard — a framework fitted to a platform, over the head of personnel on the platform

stabilizers — mechanical support used to improve stability of a stationary truck

stacking — the process of elevating and placing a load

toeboard — a vertical barrier along the exposed sides of a platform

transport vehicle — a cargo-carrying vehicle (e.g., truck, semitrailer, trailer, or railcar) which may be

Copyright ASME International
Provided by IHS under license with ASME
No reproduction or networking permitted without license from IHS
Not for Resale

entered by a powered or nonpowered industrial truck to load or unload material

truck, battery-electric — an electric truck in which the power source is a storage battery

truck, electric — a truck in which the principal energy is transmitted from power sources to motor(s) in the form of electricity

truck, manually propelled high lift industrial — a manually propelled truck equipped with an elevating mechanism designed to permit stacking, excluding elevating-type hand trucks whose design intent is to be tipped toward the operator for horizontal travel on the two rear wheels. Types of manually propelled high lift industrial trucks are high lift fork truck, high lift ram truck, high lift boom truck, high lift clamp truck, and high lift platform truck

user — a person or organization responsible for the employing of industrial trucks

Copyright ASME International
Provided by IHS under license with ASME
No reproduction or networking permitted without license from IHS
Not for Resale

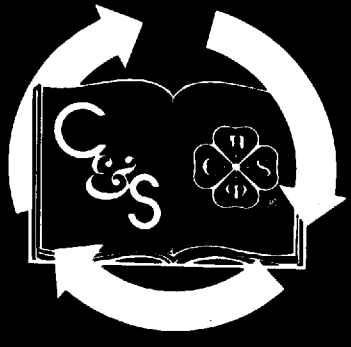

This document is printed
on 50% recycled paper.

ISBN # 0-7918-2147-1

K13292

Copyright ASME International
Provided by IHS under license with ASME
No reproduction or networking permitted without license from IHS

Not for Resale