ASME B56.1-2004
(Revision of ASME B56.1-2000)

Safety Standard for Low Lift and High Lift Trucks

Powered and Nonpowered Industrial Trucks

AN AMERICAN NATIONAL STANDARD



The American Society of Mechanical Engineers

Copyright ASME International
Provided by IHS under license with ASME
No reproduction or networking permitted without license from IHS

Not for Resale

ASME B56.1-2004
(Revision of ASME B56.1-2000)

Safety Standard for Low Lift and High Lift Trucks

Powered and Nonpowered Industrial Trucks

AN AMERICAN NATIONAL STANDARD

The American Society of Mechanical Engineers
Three Park Avenue • New York, NY 10016

Copyright ASME International
Provided by IHS under license with ASME
No reproduction or networking permitted without license from IHS
Not for Resale

Date of Issuance: November 22, 2004

The next edition of this Standard is scheduled for publication in 2007. There will be no addenda issued to this edition.

ASME issues written replies to inquiries concerning interpretations of technical aspects of this Standard. Interpretations are published on the ASME Web site under the Committee Pages at http://www.asme.org/codes/ as they are issued, and will also be published within the next edition of the Standard.

ASME is the registered trademark of The American Society of Mechanical Engineers.

This code or standard was developed under procedures accredited as meeting the criteria for American National Standards. The Standards Committee that approved the code or standard was balanced to assure that individuals from competent and concerned interests have had an opportunity to participate. The proposed code or standard was made available for public review and comment that provides an opportunity for additional public input from industry, academia, regulatory agencies, and the public-at-large.

ASME does not "approve," "rate," or "endorse" any item, construction, proprietary device, or activity.

ASME does not take any position with respect to the validity of any patent rights asserted in connection with any items mentioned in this document, and does not undertake to insure anyone utilizing a standard against liability for infringement of any applicable letters patent, nor assume any such liability. Users of a code or standard are expressly advised that determination of the validity of any such patent rights, and the risk of infringement of such rights, is entirely their own responsibility.

Participation by federal agency representative(s) or person(s) affiliated with industry is not to be interpreted as government or industry endorsement of this code or standard.

ASME accepts responsibility for only those interpretations of this document issued in accordance with the established ASME procedures and policies, which precludes the issuance of interpretations by individuals.

No part of this document may be reproduced in any form,
in an electronic retrieval system or otherwise,
without the prior written permission of the publisher.

The American Society of Mechanical Engineers
Three Park Avenue, New York, NY 10016-5990

Copyright © 2004 by
THE AMERICAN SOCIETY OF MECHANICAL ENGINEERS
All rights reserved
Printed in U.S.A.

Copyright ASME International
Provided by IHS under license with ASME
No reproduction or networking permitted without license from IHS

Not for Resale

CONTENTS

Foreword v
Committee Roster vi
B56 Series Introduction vii
Summary of Changes ix

Part I Introduction 1
1 Scope 1
2 Purpose 1
3 Interpretation 1

Part II For the User 2
4 General Safety Practices 2
5 Operating Safety Rules and Practices 7
6 Maintenance and Rebuild Practices 12

Part III For the Manufacturer 15
7 Design and Construction Standards 15

Part IV Glossary of Commonly Used Words and Phrases 49

Part V References 57

Figures
1 Operator-Up Counterbalanced Front/Side Loader Lift Truck 36
2 Service Brake Performance Requirements 38
3 Typical Fork 43
4 Overhead Guard Cube Drop Test Deformation Limit 44
5 Overhead Guard Impact Test Method 44
6 Overhead Guard Impact Deformation Limit (Sit-Down) 45
7 Overhead Guard Impact Deformation Limit (Stand-Up) 45
8 Fork Extension 47
9 Motorized Hand/Rider Truck 50
10 Counterbalanced Front/Side Loader Lift Truck 51
11 Types of Trucks: High Lift Counterbalanced Truck, Cantilever Truck, Rider Truck, Forklift Truck 52
12 High Lift Rider Platform Truck 53
13 Low Lift Truck, Low Lift Platform Truck 53
14 High Lift Order Picker Rider Truck 53
15 Low Lift Order Picker Truck 53
16 Motorized Hand Truck, Pallet Truck 54
17 High Lift Motorized Hand Trucks 55
18 Narrow Aisle Rider Truck, Straddle Truck 56
19 Operator-Up Counterbalanced Front/Side Loader Truck 56
20 Reach Rider Truck 56
21 Single Side Loader Rider Truck 56

Tables
1(a) Counterbalanced Lift Trucks 19
1(b) Counterbalanced Truck Handling Freight Containers 20
2 Narrow Aisle High Lift Trucks 22
3 Narrow Aisle High Lift Trucks 24
4 Narrow Aisle High Lift Trucks 25
5 High Lift Order Picker Trucks 27

Copyright ASME International
Provided by IHS under license with ASME
No reproduction or networking permitted without license from IHS
Not for Resale

6	High Lift Order Picker Trucks	28
7	Counterbalanced Front/Side Loader Lift Trucks	29
8	Counterbalanced Front/Side Loader Lift Trucks	30
9	Counterbalanced Front/Side Loader Lift Trucks	31
10	Operator-Up Counterbalanced Front/Side Loader Lift Truck	32
11	Operator-Up Counterbalanced Front/Side Loader Lift Truck	33
12	Operator-Up Counterbalanced Front/Side Loader Lift Truck	35
13	Single Side Loader Lift Trucks	37
14	Lever- or Handle-Type Controls: Sequence of Location and Direction of Motion	42
15	Overhead Guard Impact Test Loads	43

Copyright ASME International
Provided by IHS under license with ASME
No reproduction or networking permitted without license from IHS
Not for Resale

FOREWORD

In June 1946, The American Society of Mechanical Engineers adopted a resolution to develop a Safety Code for Powered Industrial Trucks. On August 7, 1947, the American Standards Association (now called the American National Standards Institute, Inc.) approved ASME sponsorship of such a standard. An organizational meeting was held on May 20, 1948.

Comments from a first draft, dated April 1949, were incorporated in a final draft dated November, 1949, which was submitted to Sectional Committee Members for letter ballot vote and was unanimously affirmed. In June, 1950, ASA (now called ANSI) approved the code as submitted, and issued it as ASA B56.1-1950, Safety Code for Industrial Powered Trucks.

In accordance with procedures to review the Standard every 5 years, revisions were developed under ASA and its successor organizations as follows:

Revision	Started	Printed	Standards Body
B56.1-1955	May 1948	March 1955	American Standards Association
B56.1-1959	March 1955	August 1959	American Standards Association
B56.1-1969	August 1959	September 1969	USA Standards Institute
B56.1-1975	October 1969	September 1975	American National Standards Institute
B56.1-1983	October 1975	April 1984	American National Standards Institute
B56.1-1988	April 1987	June 1988	American National Standards Institute
B56.1-1993	February 1993	January 1994	American National Standards Institute
B56.1-2000	March 1995	May 2000	American National Standards Institute
B56.1-2004	December 2003	November 2004	American National Standards Institute

ASME issues written replies to inquiries concerning interpretation of technical aspects of this Standard. Beginning with the 1988 edition, Interpretations were included with the addenda service. Interpretations are not part of the addenda to the Standard.

The 1993 edition of B56.1 was approved by the American National Standards Institute on November 12, 1993.

The 2000 edition of B56.1 was approved by the American National Standards Institute on January 19, 2000.

The 2004 edition of B56.1 was approved by the American National Standards Institute on April 20, 2004.

This Standard shall become effective 1 year after its respective Date of Issuance. Part III applies only to trucks manufactured after the effective date.

Safety codes and standards are intended to enhance public health and safety. Revisions result from committee consideration of factors such as technological advances, new data, and changing environmental and industry needs. Revisions do not imply that previous editions were inadequate.

Copyright ASME International
Provided by IHS under license with ASME
No reproduction or networking permitted without license from IHS
Not for Resale

ASME B56 STANDARDS COMMITTEE
Powered and Nonpowered Industrial Trucks

(The following is the roster of the Committee at the time of approval of this Standard.)

OFFICERS

R. N. Rogers, *Chair*
S. J. Simpson, *Vice Chair*
R. Mohamed, *Secretary*

COMMITTEE PERSONNEL

L. J. Churches, Churches & Associates, Inc.
J. N. Eavenson, Commercial Turf Products, Ltd.
D. M. Graham, Ford Motor Co.
D. A. Greer, Verizon Communication
M. G. Herrstromer, AGV Products, Inc.
D. E. Hupp, Aluminum Co. of America
J. E. Johnson, Johnson Engineering Services, Inc.
P. J Kapust, U.S. Department of Labor — OSHA
K. M. Stevanus, *Alternate,* U.S. Department of Labor — OSHA
D. T. Labelle, Consultant
J. A. Lyle, NACCO Material Handling
R. Mohamed, The American Society of Mechanical Engineers
W. J. Montwieler, The Industrial Truck Association
C. F. Merther, *Alternate,* The Industrial Truck Association
E. J. Ramsey, Sweepster
R. L. Riley, U.S. Army Tacom
R. N. Rogers, Consultant
K. S. Sanders, East Penn Manufacturing Co., Inc.
S. J. Simpson, Kalmar RT Center LLC
F. E. Steinberger, General Motors Corp.
R. E. Ward, Material Handling Industry of America

SUBCOMMITTEE B56.1 — LOW LIFT AND HIGH LIFT TRUCKS

D. M. Graham, *Chair,* Ford Motor Co.
D. L. Dunlap, *Vice Chair,* Crown Equipment Corp.
S. L. McDermitt, *Alternate,* Crown Equipment Corp.
R. Mohamed, *Secretary,* The American Society of Mechanical Engineers
I. Avitan, Avitan & Associates, Inc.
C. A. Barnes, Consulting Engineer
B. W. Bennett, General Motors of Canada, Ltd.
J. F. Bennett, Bennett Associates
L. J. Bovenzi, Eastman Kodak Co.
M. Boyles, Taylor Machine Works
J. A. Braun, Toyota Material Handling USA, Inc.
L. J. Churches, Churches & Associates, Inc.
J. H. Dobson, Safety and Health Associates, Ltd.
B. Y. Tommina, *Alternate,* Safety and Health Associates, Ltd.
F. Entwisle, Consultant
J. L. Franks, Consultant
D. A. Greer, Verizon Communications
D. E. Hupp, Aluminum Co. of America
T. M. Jeruzal, Daimler Chrysler Corp.
P. J. Kapust, U.S. Department of Labor, OSHA
J. A. Lyle, NACCO Material Handling
C. F. Merther, The Industrial Truck Association
L. Mills, Van Dorn Demag Corp.
R. Mohamed, The American Society of Mechanical Engineers
D. Mueller, BPR/RICO Equipment, Inc.
D. J. Muhlenkamp, Toyota Material Handling USA, Inc.
D. G. Norton, The Raymond Corp.
C. C. Ragland, Multiton MIC Corp.
R. L. Riley, U.S. Army Tacom
R. N. Rogers, Consultant
J. B. Sevart, Sevart JB Consulting Engineer
R. K. Smith, R. K. Smith Engineering, Inc.
K. R. Van Hook, Mitsubishi Caterpillar America, Inc.
R. D. Vincent, 3M

Copyright ASME International
Provided by IHS under license with ASME
No reproduction or networking permitted without license from IHS
Not for Resale

B56 SERIES INTRODUCTION

(04)

GENERAL

This Standard is one of a series that has been formulated with the American Society of Mechanical Engineers as Sponsor in accordance with the Accredited Organization method, the procedures accredited by the American National Standards Institute, Inc., and the following scope:
Establishment of the safety requirements relating to the elements of design, operation, and maintenance; standardization relating to principal dimensions to facilitate interchangeability, test methods, and test procedures of powered and nonpowered industrial trucks (not including vehicles intended primarily for earth moving or over-the-road hauling); and maintenance of liaison with the International Organization for Standardization (ISO) in all matters pertaining to powered and nonpowered industrial trucks.

One purpose of the Standard is to serve as a guide to governmental authorities having jurisdiction over subjects within the scope of the Standard. It is expected, however, that the Standard will find a major application in industry, serving as a guide to manufacturers, purchasers, and users of the equipment.

For convenience, Standards for Powered and Nonpowered Industrial Trucks have been divided into separate volumes:

Safety Standards

B56.1	Low Lift and High Lift Trucks
B56.5	Guided Industrial Vehicles and Automated Functions of Manned Industrial Vehicles
B56.6	Rough Terrain Forklift Trucks
B56.8	Personnel and Burden Carriers
B56.9	Operator Controlled Industrial Tow Tractors
B56.10	Manually Propelled High Lift Industrial Trucks

Standardization Standards

B56.11.1	Double Race or Bi-Level Swivel and Rigid Industrial Casters
B56.11.4	Hook-Type Forks and Fork Carriers for Powered Industrial Forklift Trucks
B56.11.5	Measurement of Sound Emitted by Low Lift, High Lift, and Rough Terrain Powered Industrial Trucks
B56.11.6	Evaluation of Visibility From Powered Industrial Trucks
B56.11.7	Liquefied Petroleum Gas (LPG) Fuel Cylinders (Horizontal or Vertical) Mounting — Liquid Withdrawal — for Powered Industrial Trucks

Safety standards that were previously listed as B56 volumes but now have different identification due to a change in standards development assignments are as follows:

NFPA 505	Fire Safety Standard for Powered Industrial Trucks Type Designations, Areas of Use, Maintenance and Operation (formerly B56.2)
UL 583	Standard for Safety for Electric-Battery-Powered Industrial Trucks (formerly B56.3)
UL 558	Standard for Safety for Internal Combustion Engine-Powered Industrial Trucks (formerly B56.4)

B56 volumes that have been withdrawn:

B56.7	Industrial Crane Trucks
B56.11.3	Load Handling Symbols for Powered Industrial Trucks
3287	Powered Industrial Trucks: Symbols for Operator Controls and Others Displays

If adopted for governmental use, the references to other national standards in the specific volumes may be changed to refer to the corresponding governmental regulations.

The use of powered and nonpowered industrial trucks is subject to certain hazards that cannot be completely eliminated by mechanical means, but the risks can be minimized by the exercise of intelligence, care, and common sense. It is therefore essential to have competent and careful operators, physically and mentally fit, and thoroughly trained in the safe operation of the equipment and the handling of the loads. Serious hazards are overloading, instability of the load, obstruction to the

Copyright ASME International
Provided by IHS under license with ASME
No reproduction or networking permitted without license from IHS
Not for Resale

free passage of the load, collision with objects or pedestrians, poor maintenance, and use of equipment for a purpose for which it was not intended or designed.

Suggestions for improvement of these Standards, especially those based on actual experience in their application, shall be submitted to the Secretary of the B56 Committee, American Society of Mechanical Engineers (ASME), Three Park Avenue, New York, NY 10016-5990.

Comments shall be written in accordance with the following format:

(a) specify paragraph designation of the pertinent volume

(b) indicate suggested change (addition, deletion, revision, etc.)

(c) briefly state reason and/or evidence for suggested change

(d) submit suggested changes to more than one paragraph in the order in which they appear in the volume

The appropriate B56 Subcommittee will consider each suggested revision at its first meeting after receipt of the suggested revision(s).

Copyright ASME International
Provided by IHS under license with ASME
No reproduction or networking permitted without license from IHS
Not for Resale

ASME B56.1-2004
SUMMARY OF CHANGES

Following approval by the ASME B56 Committee and ASME, and after public review, ASME B56.1-2004 was approved by the American National Standards Institute on April 20, 2004.

ASME B56.1-2004 includes editorial changes, revisions, and corrections introduced in ASME B56.1a-2001 and ASME B56.1b-2003, as well as the following changes identified by a margin note, **(04)**. All U.S. Customary units were removed from Part III, For the Manufacturer.

Page	*Location*	*Change*
vii	General	Revised
1	3.4	Revised
7	5.2.3	Revised
	5.2.9	Revised
10, 11	5.3.22	Added
15	7.2	(1) Paragraph 7.2.2 revised (2) New para. 7.2.3 added (3) Former paras. 7.2.3 and 7.2.4 redesignated as 7.2.4 and 7.2.5, respectively
20	Table 1(b)	Sketch (g) editorially revised
40	7.20.6	Added
	7.20.7	Added
	7.21.10	Added
	7.21.11	Added
48	7.41	Note added
49	Glossary of Commonly Used Words and Phrases	Definition for *normal operating position* revised

SPECIAL NOTE:

The interpretations to ASME B56.1 are included in this edition as a separate section for the user's convenience. The interpretations are not part of this edition or of the Standard itself.

Copyright ASME International
Provided by IHS under license with ASME
No reproduction or networking permitted without license from IHS
Not for Resale

Copyright ASME International
Provided by IHS under license with ASME
No reproduction or networking permitted without license from IHS
Not for Resale

SAFETY STANDARD FOR LOW LIFT AND HIGH LIFT TRUCKS

Part I
Introduction

1 SCOPE

This Standard defines the safety requirements relating to the elements of design, operation, and maintenance of low lift and high lift powered industrial trucks controlled by a riding or walking operator, and intended for use on compacted, improved surfaces.

2 PURPOSE

The purpose of this Standard is to promote safety through the design, construction, application, operation, and maintenance of low lift and high lift powered industrial trucks. This Standard may be used as a guide by governmental authorities desiring to formulate safety rules and regulations. This Standard is also intended for voluntary use by others associated with the manufacture or use of low lift and high lift powered industrial trucks.

3 INTERPRETATION

3.1 Mandatory and Advisory Rules

To carry out the provisions of this Standard, all items in Parts II, III, IV, and V are mandatory except those including the word *should*, which are recommendations.

3.2 Classification of Approved Trucks

The word *approved* means the classification or listing of trucks as to fire, explosion, and/or electric shock hazard by a nationally recognized testing laboratory, i.e., a laboratory qualified and equipped to conduct examinations and tests such as those prescribed by Underwriters Laboratories, Incorporated.

3.3 Requests for Interpretation

The B56 Committee will render an interpretation of any requirement of this Standard. Interpretations will be rendered only in response to a written request sent to the Secretary of the B56 Committee, ASME International, Three Park Avenue, New York, NY 10016-5990. The request for interpretation shall be in the following format.

Subject: Cite the applicable paragraph number(s) and provide a concise description.

Edition: Cite the applicable edition of the pertinent standard for which the interpretation is being requested.

Question: Phrase the question as a request for an interpretation of a specific requirement suitable for general understanding and use, not as a request for approval of a proprietary design or situation. The inquirer may also include any plans or drawings that are necessary to explain the question; however, they should not contain proprietary names or information.

ASME procedures provide for reconsideration of any interpretation when or if additional information that might affect an interpretation is available. Further, persons aggrieved by an interpretation may appeal to the cognizant ASME Committee or Subcommittee. ASME does not "approve," "certify," "rate," or "endorse" any item, construction, proprietary device or activity.

3.4 Metric Conversions (04)

The values stated in metric units are to be regarded as the standard. U.S. Customary units are maintained in the User's section (in parentheses) as information for those not familiar with metric units. The conversion to U.S. Customary units is a direct (soft) conversion from SI units.

Copyright ASME International
Provided by IHS under license with ASME
No reproduction or networking permitted without license from IHS
Not for Resale

Part II
For the User

4 GENERAL SAFETY PRACTICES

4.1 Introduction

4.1.1 Part II contains requirements for the users of powered industrial trucks. Included are requirements for operator qualifications and training, operating safety rules, and maintenance practices.

4.1.2 Unusual operating conditions may require additional safety precautions and special operating instructions.

4.1.3 Supervision is an essential element in the safe operation of powered industrial trucks.

4.2 Modifications, Nameplates, Markings, and Capacity

4.2.1 Except as provided in para. 4.2.2, no modifications or alterations to a powered industrial truck that may affect the capacity, stability, or safe operation of the truck shall be made without the prior written approval of the original truck manufacturer or its successor thereof. When the truck manufacturer or its successor approves a modification or alteration, appropriate changes shall be made to capacity plates, decals, tags, and operation and maintenance manuals.

4.2.2 If the truck manufacturer is no longer in business and there is no successor to the business, the user may arrange for a modification or alteration to a powered industrial truck, provided however, the user

(a) arranges for modification or alteration to be designed, tested, and implemented by an engineer(s) expert in industrial trucks and their safety

(b) maintains a permanent record of the design, test(s), and implementation of the modification or alteration

(c) makes appropriate changes to the capacity plate(s), decals, tags, and operation and maintenance manuals

(d) affixes a permanent and readily visible label on the truck stating the manner in which the truck has been modified or altered together with the date of the modification or alteration, and the name of the organization that accomplished the tasks

4.2.3 If the truck is equipped with a front-end attachment(s), including fork extensions, the user shall see that the truck is marked to identify the attachment(s), show the weight of the truck and attachment combination, and show the capacity of the truck with attachment(s) at maximum elevation with the load laterally centered.[1]

4.2.4 The user shall see that all nameplates and caution and instruction markings are in place and legible.

4.2.5 The user shall consider that changes in load dimension may affect truck capacity.

4.2.6 Fork extensions shall be designed for the application.

4.2.7 When modifications involve rebuild and repair of the basic unit, they shall be made in accordance with the manufacturer's established criteria and procedures (see para. 6.2).

4.2.8 Where steering must be accomplished with one hand using a steering handwheel, a steering knob(s) or equivalent shall be used to promote safe and effective operation. The steering handwheel and knob configuration shall be of a design that will minimize the hazard from a spinning handwheel due to a road reaction feedback, or the steering mechanism shall be of a type that prevents road reactions from causing the steering handwheel to spin. The steering knob(s) shall be within the periphery of the steering handwheel.

4.2.9 Where steering can be accomplished with either hand, and the steering mechanism is of a type that prevents road reactions from causing the handwheel to spin (power steering or equivalent), steering knobs may be used. When used, steering knobs shall be of a type that can be engaged by the operator's hand from the top, and shall be within the periphery of the steering handwheel.

4.2.10 Batteries used in electric trucks shall comply with the minimum/maximum battery weight range shown on the truck nameplate.

4.3 Stopping Distance (Descending Grades)

4.3.1 When descending a grade, stopping distance will be greater than on-level operation. Methods shall be provided to allow for this condition. Some methods are: reduce speed, limit loads, allow adequate clear space at the bottom of the grade, etc. (see para. 5.3.8).

[1] Weight value to be accurate within ±5%.

Copyright ASME International
Provided by IHS under license with ASME
No reproduction or networking permitted without license from IHS
Not for Resale

4.3.2 Approximate theoretical stopping distance for a dry clean asphalt, brushed concrete, or equivalent surface may be determined from the following formula:

$$s = \frac{0.394v^2}{D - G}$$

or

$$s_1 = \frac{3.34v_1^2}{D - G}$$

where

D = drawbar drag, as a percent, as determined from Fig. 2 (e.g., 25 for 25%)
G = percent grade (e.g., 5 for 5%)
s = distance to stop, m
s_1 = distance to stop, ft
v = velocity, km/h
v_1 = velocity, mph

4.4 Stability

4.4.1 Experience has shown that high lift trucks that comply with the stability requirements stated in para. 7.6 are stable when properly operated. However, improper operation, faulty maintenance, or poor housekeeping may contribute to a condition of instability and defeat the purpose of the Standard.

4.4.2 Some of the conditions that may affect stability are: ground and floor conditions, grade, speed, loading (trucks equipped with attachments behave as partially loaded trucks even when operated without a load on the attachment), battery weight, dynamic and static forces, and the judgment exercised by the operator.

4.4.3 On electric trucks, use only a battery or batteries having a total service weight within the minimum/maximum range specified on truck nameplate. See para. 7.5.8 for information on battery weight.

4.4.4 Users shall give consideration to special operating conditions. The amount of forward and rearward tilt to be used is governed by the application. The use of maximum rearward tilt is allowable under certain conditions such as traveling with the load lowered. The stability of a truck as determined by the tests outlined in para. 7.6 does not encompass consideration for excessive tilt at high elevations, or the operation of trucks with excessive off-center loads.

4.4.5 Some users may decide to establish, for their own use, stability requirements that will vary from those in para. 7.6. However, the requirements in para. 7.6 should serve as a guide for the user, working with the manufacturer, in establishing his own more stringent requirements.

4.5 Safety Guards

4.5.1 Overhead Guards

4.5.1.1 High lift rider trucks, including order picker trucks, shall be fitted with an overhead guard manufactured in accordance with para. 7.29.

4.5.1.2 An overhead guard is intended to offer protection to the operator from falling objects but cannot protect against every possible impact. Therefore, it should not be considered a substitute for good judgment and care in loading, handling, storage, etc.

4.5.1.3 Under certain unusual operating conditions, a stronger guard, or one having openings of smaller size, may be specified by the user, working with the truck manufacturer.

4.5.1.4 Exceptions

(a) Where overhead obstructions limit the overall lowered height of the truck, normal overhead guard height and the vertical clearance under the guard may be reduced to permit operation with a guard.

(b) The user may operate the truck without the overhead guard, provided all of the following conditions are met:

(1) vertical movement of the lifting mechanism is restricted to 1 825 mm (72 in.) or less from the ground

(2) the truck will operate only in an area where

(a) the bottom of the top tiered load is not higher than 1 825 mm (72 in.) and the top is not more than 3 050 mm (120 in.) from the ground when tiered

(b) only stable (preferably interlocked, unitized, or containerized) loads are handled

(c) there is protection against falling objects from adjacent high stack areas

4.5.2 Load Backrest Extension. If the type of load presents a hazard, the user shall equip forklift trucks with a vertical load backrest extension manufactured in accordance with para. 7.28.

4.5.3 Operator Compartment Guards. For stand up, end controlled, narrow aisle trucks, more or less guarding than specified by paras. 7.30 and 7.36 may be required to enhance safe operation. Changes shall be determined through cooperation between the user and manufacturer.

4.6 Fuel Handling and Storage

4.6.1 The storage and handling of liquid fuels (such as gasoline and diesel fuel) shall be in accordance with ANSI/NFPA 505 and ANSI/NFPA 30.

4.6.2 The storage and handling of liquefied petroleum gas fuel shall be in accordance with ANSI/NFPA 505 and ANSI/NFPA 58.

Copyright ASME International
Provided by IHS under license with ASME
No reproduction or networking permitted without license from IHS Not for Resale

4.7 Changing and Charging Storage Batteries for Electric Trucks

4.7.1 Battery changing and charging facilities and procedures shall be in accordance with ANSI/NFPA 505.

4.7.2 The charger connector shall not be plugged into the truck connector under any circumstances.

4.7.3 To avoid damage to equipment or injury to personnel, consult manufacturer's procedures when replacing contacts in any battery connector.

4.7.4 Failure to comply with specified nameplate battery weight range could result in truck instability.

4.8 Hazardous Locations

4.8.1 It shall be the responsibility of the user to determine the hazard classification of any particular atmosphere or location according to ANSI/NFPA 505.

4.8.2 Powered industrial trucks operated in and batteries used in hazardous areas shall be approved and of the type required by ANSI/NFPA 505.

Dependent on the proposed type of truck and area, approved trucks shall be built in compliance with one of the following:

(a) UL 558

(b) UL 583

4.8.3 Trucks and areas of use shall be marked in accordance with ANSI/NFPA 505.

4.9 Aisles and Obstructions

4.9.1 Permanent aisles, roadways or passageways, floors, and ramps shall be defined in some fashion or marked to conform with ANSI Z535.2.

4.9.2 Permanent or temporary protrusions of loads, equipment, material, and construction facilities into the usual operating area shall be guarded, clearly and distinctively marked, or clearly visible.

4.10 Lighting for Operating Areas

4.10.1 Controlled lighting of adequate intensity should be provided in operating areas in conformance with ANSI/IES RP7.

4.10.2 Where operating conditions indicate, the user shall be responsible for having the truck equipped with lights.

4.11 Control of Noxious Gases and Fumes

4.11.1 Carbon monoxide is a colorless, odorless, tasteless, poisonous gas. This gas is the product of incomplete burning of any material containing carbon, such as gasoline, LP and natural gas, and diesel fuel. Internal combustion engines that use these fuels are sources of exposure in the workplace. Control of carbon monoxide levels in the workplace is dependent on ventilation and proper maintenance of carbon monoxide producers including internal combustion-powered equipment.

Properly running internal combustion engines will still produce carbon monoxide emissions and deplete the oxygen supply sufficiently, affecting the ambient air of the work environment if the ambient air exchange is not adequate. Always use ventilation as the primary means of control by providing necessary air exchange capability.

4.11.2 Ventilation shall be provided in enclosed areas where internal combustion-powered equipment is used to maintain an atmosphere that shall not exceed the contamination levels specified by the American Conference of Governmental Industrial Hygienists, "Threshold Limit Values of Airborne Contaminants." (See 29 CFR 1910.1000 Table Z-1.) This includes the atmosphere within the truck cab when a cab is provided.

4.11.3 Common symptoms of carbon monoxide exposure may include headaches, dizziness, and nausea. If employees exhibit these symptoms, move them into fresh air, seek medical attention as required, and determine the source of carbon monoxide by monitoring "threshold limit values" in areas of exposure.

4.11.4 Questions concerning degree of concentration and methods of sampling to ascertain the conditions present should be referred to a qualified professional. Users must follow applicable local, state, and federal regulations that apply to their workplace.

4.12 Sound

Powered industrial trucks can contribute to the ambient sound in the work area. Consideration should be given to the sound exposure of personnel in the work area.

4.13 Dockboards (Bridge Plates)[2]

4.13.1 Portable and powered dockboards shall be marked conspicuously with their carrying capacity. The carrying capacity indicated shall not be exceeded.

4.13.2 Portable dockboards shall be secured in position, either by being anchored or by being equipped with devices that will prevent their slipping.

4.13.3 Handholds or other effective means shall be provided on portable dockboards to permit safe handling. Where possible, fork loops or lugs shall be provided for handling by fork trucks.

4.13.4 All types of dockboards shall have a high friction surface designed to reduce the possibility of employees or trucks slipping.

[2] Dockboard recommendations also apply to bridge plates.

Copyright ASME International
Provided by IHS under license with ASME
No reproduction or networking permitted without license from IHS
Not for Resale

4.13.5 All types of dockboards shall be designed and maintained so that one end will have a substantial contact with the dock (or loading platform) and the other end with the transport vehicle to prevent the dockboard from rocking or sliding.

4.14 Trucks and Railroad Cars

4.14.1 When powered industrial trucks are driven on and off highway trucks or trailers, the brakes on the highway trucks or trailers shall be applied, and wheel chocks or other positive mechanical means shall be used to prevent unintentional movement of highway trucks and trailers.

4.14.2 Provision shall be made to prevent railroad cars from being moved during loading and unloading. Wheel stops, hand brakes, or other recognized positive means shall be used to prevent movement during loading and unloading.

4.14.3 Whenever powered industrial trucks are driven on and off semitrailers not coupled to a tractor, supports may be needed to prevent upending or corner dipping.

4.14.4 Maintain a safe distance from the edge of ramps, platforms, or other similar working surfaces.

4.14.5 Do not move railroad cars or trailers with a powered industrial truck unless the truck is properly designed and equipped for that operation.

4.15 Warning Device

4.15.1 Every truck shall be equipped with an operator-controlled horn, whistle, gong, or other sound-producing device(s).

4.15.2 The user shall determine if operating conditions require the truck to be equipped with additional sound-producing or visual (such as lights or blinkers) devices, and be responsible for providing and maintaining such devices.

4.16 Relocating Powered Industrial Trucks

When utilizing lifting equipment such as elevators, cranes, ship hoisting gear, etc., to relocate a powered industrial truck, the user shall ensure that the capacity of the hoisting equipment being used is not exceeded.

4.17 Elevating Personnel

4.17.1 Only operator-up high lift trucks have been designed to lift personnel. If a work platform is used on trucks designed and intended for handling materials, the requirements of paras. 4.17.2 and 4.17.3 shall be met for the protection of personnel.

4.17.2 Whenever a truck is used to elevate personnel, the following precautions for the protection of personnel shall be taken:

(a) Comply with the design requirements in para. 7.36 of this Standard.

(b) Provide protection for personnel in their normal working position on the platform from moving parts of the truck that represent a hazard.

(c) Be certain that required restraining means such as railings, chains, cable, body belt(s) with lanyard(s), or deceleration devices, etc., are in place and properly used.

(d) Be certain that the lifting mechanism is operating smoothly throughout its entire lift height, both empty and loaded, and that all lift limiting devices and latches, if provided, are functional.

(e) Provide overhead protection as indicated to be necessary by the operating conditions.

(f) Replace any body belt, lanyard, or deceleration device that has sustained permanent deformation or is otherwise damaged.

4.17.3 Whenever a truck is equipped with a work platform (does not include operator-up high lift trucks), precautions specified in para. 4.17.2 shall be taken and the following additional precautions shall be taken for the protection of personnel:

(a) Provide a platform that complies with the design requirements in para. 7.37.3.

(b) The platform attachment means are applied and the platform is securely attached to the lifting carriage or forks.

(c) When the lifting carriage and/or forks are supporting the platform used to elevate personnel, the lifting carriage and/or forks are secured to prevent them from pivoting upward.

(d) The mast is vertical — do not operate on a side slope.

(e) The platform is horizontal and centered and not tilted forward or rearward when elevated.

(f) The truck has a firm and level footing.

(g) Place all travel controls in neutral and set parking brake.

(h) Before elevating personnel, mark area with cones or other devices to warn of work by elevated personnel.

(i) Lift and lower personnel smoothly, with caution, and only at their request.

(j) Avoid overhead obstructions and electric wires.

(k) Keep hands and feet clear of controls other than those in use.

(l) Move truck and/or platform slowly, only for minor adjustments in horizontal positioning when personnel are on the platform, and only at their request.

(m) On trucks equipped with rotators, mechanically secure the rotator to prevent movement.

(n) Have a trained operator in position to control the truck, or available to operate controls. When the operator is not in the operating position, engage the parking brake and block the wheels.

Copyright ASME International
Provided by IHS under license with ASME
No reproduction or networking permitted without license from IHS Not for Resale

(o) The combined weight of the platform, load, and personnel is not to exceed one-half of the capacity as indicated on the nameplate of the truck on which the platform is used.

(p) Personnel are to remain on the platform floor. Use of railings, planks, ladders, etc., on the platform for purpose of achieving additional reach or height is prohibited.

(q) Personnel and equipment on the platform are not to exceed the available space.

(r) Lower platform to floor level for personnel to enter and exit. Do not climb on any part of the truck in attempting to enter and exit.

4.18 Operator Qualifications

Only trained and authorized persons shall be permitted to operate a powered industrial truck. Operators of powered industrial trucks shall be qualified as to visual, auditory, physical, and mental ability to operate the equipment safely according to para. 4.19 and all other applicable parts of para. 4.

4.19 Operator Training

4.19.1 Personnel who have not been trained to operate powered industrial trucks may operate a truck for the purposes of training only, and only under the direct supervision of the trainer. This training should be conducted in an area away from other trucks, obstacles, and pedestrians.

4.19.2 The operator training program should include the user's policies for the site where the trainee will operate the truck, the operating conditions for that location, and the specific truck the trainee will operate. The training program shall be presented to all new operators regardless of previous experience.

4.19.3 The training program shall inform the trainee of the following:

(a) The primary responsibility of the operator is to use the powered industrial truck safely following the instructions given in the training program.

(b) Unsafe or improper operation of a powered industrial truck can result in

(1) death or serious injury to the operator or others

(2) damage to the powered industrial truck or other property

4.19.4 The training program shall emphasize safe and proper operation to avoid injury to the operator and others and prevent property damage, and shall cover the following areas:

(a) fundamentals of the powered industrial truck(s) the trainee will operate, including

(1) characteristics of the powered industrial truck(s), including variations between trucks in the workplace

(2) similarities to and differences from automobiles

(3) significance of nameplate data, including rated capacity, warnings, and instructions affixed to the truck

(4) operating instructions and warnings in the operating manual for the truck, and instructions for inspection and maintenance to be performed by the operator

(5) type of motive power and its characteristics

(6) method of steering

(7) braking method and characteristics, with and without load

(8) visibility, with and without load, forward and reverse

(9) load handling capacity, weight and load center

(10) stability characteristics with and without load, with and without attachments

(11) controls-location, function, method of operation, identification of symbols

(12) load handling capabilities, forks, attachments

(13) hazards due to production of carbon monoxide by internal combustion engines and common initial symptoms of exposure

(14) fueling and battery charging

(15) guards and protective devices for the specific type of truck

(16) other characteristics of the specific industrial truck

(b) operating environment and its effect on truck operation, including

(1) floor or ground conditions including temporary conditions

(2) ramps and inclines, with and without load

(3) trailers, railcars, and dockboards (including the use of wheel chocks, jacks, and other securing devices)

(4) fueling and battery charging facilities

(5) the use of "classified" trucks in areas classified as hazardous due to risk of fire or explosion, as defined in ANSI/NFPA 505

(6) narrow aisles, doorways, overhead wires and piping, and other areas of limited clearance

(7) areas where the truck may be operated near other powered industrial trucks, other vehicles, or pedestrians

(8) use and capacity of elevators

(9) operation near edge of dock or edge of improved surface

(10) other special operating conditions and hazards that may be encountered

(c) operation of the powered industrial truck, including:

(1) proper preshift inspection and approved method for removing from service a truck that is in need of repair

(2) load handling techniques: lifting, lowering, picking up, placing, tilting

(3) traveling, with and without loads; turning corners

Copyright ASME International
Provided by IHS under license with ASME
No reproduction or networking permitted without license from IHS
Not for Resale

(4) parking and shutdown procedures

(5) other special operating conditions for the specific application

(d) operating safety rules and practices, including:

(1) provisions of this Standard in paras. 5.1 to 5.4 address operating safety rules and practices

(2) provisions of this Standard in para. 5.5 address care of the truck

(3) other rules, regulations, or practices specified by the employer at the location where the powered industrial truck will be used

(e) Operational training practice, including:

(1) if feasible, practice in the operation of powered industrial trucks shall be conducted in an area separate from other workplace activities and personnel

(2) training practice shall be conducted under the supervision of the trainer

(3) training practice shall include the actual operation or simulated performance of all operating tasks such as load handling, maneuvering, traveling, stopping, starting, and other activities under the conditions that will be encountered in the use of the truck

4.19.5 Testing, Retraining, and Enforcement

(a) During training, performance and oral and/or written tests shall be given by the employer to measure the skill and knowledge of the operator in meeting the requirements of the Standard. Employers shall establish a pass/fail requirement for such tests. Employers may delegate such testing to others but shall remain responsible for the testing. Appropriate records shall be kept.

(b) Operators shall be retrained when new equipment is introduced, existing equipment is modified, operating conditions are changed, or an operator's performance is unsatisfactory.

(c) The user shall be responsible for enforcing the safe use of the powered industrial truck according to the provisions of this Standard.

NOTE: Information on operator training is available from such sources as powered industrial truck manufacturers, government agencies dealing with employee safety, trade organizations of users of powered industrial trucks, public and private organizations, and safety consultants.

5 OPERATING SAFETY RULES AND PRACTICES

5.1 Operator Responsibility

5.1.1 Safe operation is the responsibility of the operator.

5.1.2 The operator shall develop safe working habits and also be aware of hazardous conditions in order to protect himself, other personnel, the truck, and other material.

5.1.3 The operator shall be familiar with the operation and function of all controls and instruments before undertaking to operate the truck.

5.1.4 Before operating any truck, truck operators shall have read and be familiar with the operator's manual for the particular truck being operated and they shall also abide by the safety rules and practices in paras. 5.2 through 5.5.

5.1.5 Before operating any truck, the operator shall be familiar with unusual operating conditions that may require additional safety precautions or special operating instructions.

5.2 General

5.2.1 Before starting to operate the truck

(a) be in operating position

(b) place directional controls in neutral

(c) disengage clutch on manual transmission-equipped trucks, or apply brake on power shift or automatic transmission-equipped trucks and electric trucks

(d) start engine or turn switch of electric truck to "ON" position

5.2.2 Do not start or operate the truck, any of its functions or attachments, from any place other than from the designated operator's position.

5.2.3 Keep hands and feet inside the operator's compartment. Do not put any part of the body outside the operator compartment of the truck. (04)

5.2.4 Never put any part of the body into the mast structure or between the mast and the truck.

5.2.5 Never put any part of the body within the reach mechanism of the truck or other attachments.

5.2.6 Understand truck limitations and operate the truck in a safe manner so as not to cause injury to personnel. Safeguard pedestrians at all times.

(a) Do not drive a truck up to anyone standing in front of an object.

(b) Ensure that personnel stand clear of the rear swing area before conducting turning maneuvers.

(c) Exercise particular care at cross aisles, doorways, and other locations where pedestrians may step into the path of travel of the truck.

5.2.7 Do not allow anyone to stand or pass under the elevated portion of any truck, whether empty or loaded.

5.2.8 Do not permit passengers to ride on powered industrial trucks unless a safe place to ride has been provided by the manufacturer.

5.2.9 A powered industrial truck is attended when the operator is less than 8 m (25 ft) from the stationary truck, which remains in his view. (04)

5.2.10 A powered industrial truck is unattended when the operator is more than 8 m (25 ft) from the truck, which remains in his view, or whenever the operator leaves the truck and it is not in his view.

Copyright ASME International
Provided by IHS under license with ASME
No reproduction or networking permitted without license from IHS Not for Resale

5.2.11

(a) Before leaving the operator's position

(1) bring truck to a complete stop

(2) place directional controls in neutral

(3) apply the parking brake

(4) lower load-engaging means fully, unless supporting an elevated platform

(b) When leaving the truck unattended

(1) stop the engine or turn off the controls

(2) if the truck must be left on an incline, block the wheels

(3) fully lower the load-engaging means

5.2.12 Maintain a safe distance from the edge of ramps, platforms, and other similar working surfaces. Do not move railroad cars with a powered industrial truck.

5.2.13 Do not use a truck for opening or closing railroad car doors, unless the truck utilizes a device specifically designed for opening and closing railroad car doors and the operator is trained in its use.

The design of the door-opening device shall require the truck to travel parallel to the railroad car, with the force applied in a direction parallel with the door travel. Care should be exercised when engaging the door opening device with the railroad car door, in order to prevent damage to the doors and/or fork truck by heavy impact forces. The entire door opening operation shall be in full view of the operator. The fork truck shall always be positioned to safeguard the dock attendant while removing the door lock pin. Whenever a railroad car door requires an abnormal force to open, the truck operator shall report the condition to his supervisor or as instructed.

5.2.14 When powered industrial trucks are driven on and off highway trucks or trailers, the brakes on the highway trucks or trailers shall be applied and wheel chocks or other positive mechanical means shall be used to prevent unintentional movement of highway trucks and trailers.

Whenever powered industrial trucks are driven on and off semitrailers that are not coupled to a tractor, supports may be needed to prevent upending or corner dipping.

5.2.15 Provision shall be made to prevent railroad cars from being moved during loading and unloading. Wheel stops, hand brakes, or other recognized positive means shall be used to prevent movement of railroad cars during loading and unloading.

5.2.16 Care shall be taken not to contact overhead installations such as lights, wiring, pipes, sprinkler systems, etc.

5.2.17 An overhead guard shall be used on all high lift rider trucks as protection against falling objects, unless all of the following conditions are met:

(a) Vertical movement of the lifting mechanism is restricted to 1 825 mm (72 in.) or less from the ground.

(b) The truck will be operated only in an area where

(1) the bottom of the top tiered load is not higher than 1 825 mm (72 in.) and the top is not more than 3 050 mm (120 in.) from the ground when tiered.

(2) only stable, and preferably interlocked, unitized, or containerized, loads are handled.

(3) there is protection against falling objects from adjacent, high stack areas. An overhead guard is intended to offer protection from falling objects but cannot protect against every possible impact. It should not be considered a substitute for good judgment and care in load handling.

(c) The truck is marked to identify where it can be operated.

5.2.18 A load backrest extension shall be used when necessary to guard against a load, or part of it, from falling toward the operator.

5.2.19 In areas classified as hazardous, use only trucks approved for use in those areas.

5.2.20 Report all accidents involving personnel, building structures, and equipment to the supervisor or as directed.

5.2.21 Do not add to, or modify, the truck.

5.2.22 Do not block access to fire aisles, stairways, or fire equipment.

5.2.23 Motorized hand trucks shall not be ridden unless they are of the hand/rider design.

5.2.24 Whenever a truck without controls that are elevatable with the lifting carriage or forks is used to elevate personnel

(a) the platform attachment means are applied and the platform is securely attached to the lifting carriage or forks.

(b) be certain that the lifting mechanism is operating smoothly throughout its entire lift height, both empty and loaded, and that all lift limiting devices and latches, if provided, are functional.

(c) the mast is vertical — do not operate on a side slope.

(d) the platform is horizontal and centered and not tilted forward or rearward when elevated.

(e) the truck has a firm and level footing.

(f) place all travel controls in neutral and set parking brake.

(g) before elevating personnel, mark area with cones or other devices to warn of work by elevated personnel.

(h) lift and lower personnel smoothly, with caution, and only at their request;

(i) avoid overhead obstructions and electric wires.

Copyright ASME International
Provided by IHS under license with ASME
No reproduction or networking permitted without license from IHS
Not for Resale

(j) keep hands and feet clear of controls other than those in use.

(k) move truck and/or platform slowly, only for minor adjustments in horizontal positioning when personnel are on the platform, and only at their request.

(l) on trucks equipped with rotators, assure that the rotator is mechanically secured to prevent movement.

(m) when not in the operating position, engage the parking brake and block the wheels.

(n) the combined weight of the platform, load, and personnel is not to exceed one-half of the capacity as indicated on the nameplate of the truck on which the platform is used.

(o) personnel are to remain on the platform floor. Use of railings, planks, ladders, etc., on the platform for the purpose of achieving additional reach or height is prohibited.

(p) personnel and equipment on the platform are not to exceed the available space.

(q) lower platform to floor level for personnel to enter and exit. Do not climb on any part of the truck in attempting to enter and exit.

(r) restraining means such as rails, chains, etc., should be in place, or persons on the work platform shall wear a body belt and lanyard or retractable safety device.

5.2.25 The exhaust from all internal combustion engines contain carbon monoxide, a colorless, odorless, tasteless, poisonous gas. Exposure to carbon monoxide can cause serious injury or health problems, including death.

(a) Carbon monoxide can become concentrated in areas such as trailers, containers, coolers, freezers, and poorly ventilated rooms or buildings. Therefore, limit internal combustion engine usage in those areas.

(b) Common symptoms of carbon monoxide exposure may include headache, dizziness, and nausea. The smell of internal combustion engine exhaust means carbon monoxide could be present.

(c) If an operator experiences these symptoms, move him into fresh air, seek medical attention as required, and contact your employer so he can monitor "threshold limit values." (Consideration should be given to shutting off the operator's internal combustion engine.)

5.3 Traveling

5.3.1 Observe all traffic regulations including authorized plant speed limits. Under normal traffic conditions, keep to the right. Maintain a safe distance, based on speed of travel, from the truck ahead; and keep the truck under control at all times.

5.3.2 Yield the right of way to pedestrians and emergency vehicles such as ambulances and fire trucks.

5.3.3 Do not pass another truck traveling in the same direction at intersections, blind spots, or at other dangerous locations.

5.3.4 Slow down and sound the audible warning device(s) at cross aisles and other locations where vision is obstructed.

5.3.5 Cross railroad tracks at an angle wherever possible. Do not park closer than 2 m (6 ft) to the nearest rail of a railroad track.

5.3.6 Keep a clear view of the path of travel and observe for other traffic, personnel, and safe clearances.

5.3.7 If the load being carried obstructs forward view, travel with the load trailing.

5.3.8 Ascend or descend grades slowly, and with caution.[3]

(a) When ascending or descending grades in excess of 5%, loading rider trucks shall be driven with the load upgrade.

(b) Unloaded trucks should be operated on all grades with the load-engaging means downgrade.[3]

(c) On all grades the load and load-engaging means shall be tilted back, if applicable, and raised only as far as necessary to clear the road surface.

(d) Avoid turning, if possible, and use extreme caution on grades, ramps, or inclines; normally travel straight up and down.

5.3.9 Under all travel conditions, operate the truck at a speed that will permit it to be brought to a stop in a safe manner.

5.3.10 Travel with load-engaging means or load low and, where possible, tilted back. Do not elevate the load except during stacking. This does not apply to trucks that are intended normally to be operated with the load or load-engaging means elevated.

5.3.11 Make starts, stops, turns, or direction reversals in a smooth manner so as not to shift load and/or overturn the truck.

5.3.12 Do not indulge in stunt driving or horseplay.

5.3.13 Slow down for wet and slippery floors.

5.3.14 Before driving over a dockboard or bridge plate, be sure that it is properly secured. Drive carefully and slowly across the dockboard or bridge plate, and never exceed its rated capacity.

5.3.15 Do not drive trucks onto any elevator unless specifically authorized to do so. Do not exceed the capacity of the elevator. Approach elevators slowly, and then enter squarely after the elevator car is properly leveled. Once on the elevator, neutralize the controls, shut off power, and set brakes. It is advisable that all other personnel leave the elevator before truck is allowed to enter or leave.

[3] High lift order picker trucks are not normally intended for operation on a grade. Consult manufacturer's operating instructions for recommended operating procedures.

Copyright ASME International
Provided by IHS under license with ASME
No reproduction or networking permitted without license from IHS
Not for Resale

5.3.16 Avoid running over loose objects on the roadway surface.

5.3.17 When negotiating turns, reduce speed to a safe level consistent with the operating environment. Make the turns smoothly. Except when maneuvering at a very low speed, turn the steering control at a moderate, even rate.

5.3.18 The operation of a counterbalanced, center control, high lift truck with a sit-down, nonelevating operator requires special safety considerations, as follows:

(a) An industrial truck, loaded or unloaded, may tip over if an operator fails to slow down to a safe speed before making turns. Indications that a truck is being driven at an excessive speed during turning maneuvers include

(1) tire skidding

(2) truck side sway

(3) wheel lift

(4) the need to grip the steering wheel tightly to keep from sliding out of the seat

(b) The likelihood of lateral tipover is increased under any of the following conditions, or combinations of them:

(1) overloading

(2) traveling with the load elevated

(3) braking or accelerating sharply while turning

(4) rearward tilt or off-center positioning of the load

(5) traveling on an uneven surface

(6) traveling at excessive speed

(c) Tipping forward can occur and its likelihood is increased under the following conditions, or combination of them:

(1) overloading

(2) traveling with the load tilted forward and/or elevated

(3) hard braking while traveling forward

(4) suddenly accelerating while traveling in reverse

(d) The operator should stay with the truck if lateral or longitudinal tipover occurs. The operator should hold on firmly and lean away from the point of impact.

(e) The operator should stay with the truck if it falls off a loading dock or ramp. The operator should hold on firmly and lean away from the point of impact.

(f) Where the environment presents a severe hazard, or there are other unusual operating conditions, the user may need to establish different and/or additional safety precautions and special operating instructions appropriate for the conditions.

5.3.19 An active operator protection device or system, when provided, shall be used. Operator protection in the event of tipover is intended to reduce the risk of entrapment of the head and torso between the truck and the ground but may not protect the operator against all possible injury (see para. 7.2.2). However, steps indicated in paras. 5.3.18(d) and (e) should still be adhered to.

5.3.20 Motorized hand truck operation requires special safety considerations as follows:

(a) Never operate with greasy hands.

(b) Foot protection is recommended.

(c) Do not ride on the truck.

(d) Keep feet clear of truck frame while operating.

(e) Always keep hands and fingers inside the protected area of the control handle.

(f) Be cautious when traveling in reverse (load end leading) due to steering characteristics.

(g) Be careful of drive end swing when turning while operating with load end leading.

(h) Use caution when turning into an aisle. The load wheels tend to cut the corner.

(i) Never travel at a speed greater than normal walking speed [approximately 5.6 km/h (3.5 mph)].

(j) Always place both hands on the control handle when operating with the load end leading.

(k) Always operate with one hand on controls, and when possible, walk ahead and to the side of the tongue when traveling forward (load end trailing).

(l) Enter elevator or other confined areas with the load end leading.

(m) Operate on grades with the load end down grade. If the load restricts visibility, or requires the load back rest to retain the load, travel down the grade with the load end up grade, with the operator positioned off to one side per para. 5.3.20(k).

5.3.21 When operating a low lift order picker truck with a coasting system feature (see para. 7.23.5) engaged, the operator shall take the following precautions.

(a) The coasting system shall be used only on a level surface free of debris.

(b) The coasting system shall not be used to permit the truck to coast into a cross aisle.

(c) The coasting system shall not be used in pedestrian walkways.

(d) Care shall be taken to walk along the side of the lift truck and not into the path of the coasting truck.

5.3.22 The operation of high lift, rear entry end control, narrow aisle, and reach trucks either loaded or unloaded with a standup, nonelevating operator requires special safety considerations as follows: **(04)**

(a) An industrial truck may tip over if an operator fails to slow down to a safe speed before making turns. Indications that a truck is being driven at an excessive speed during maneuvers include

(1) tire skidding

(2) truck side sway

(3) wheel lift

Copyright ASME International
Provided by IHS under license with ASME
No reproduction or networking permitted without license from IHS
Not for Resale

(b) The likelihood of lateral tipover is increased under any of the following conditions, or combinations of them

(1) overloading

(2) traveling with the load or load handling mechanism elevated

(3) braking or accelerating sharply while turning

(4) excessive tilt or off-center positioning of the load

(5) traveling on an uneven surface

(6) traveling at excessive speed

(7) turning on an incline or ramp

(c) Tipping forward can occur and its likelihood is increased under the following conditions, or combination of them

(1) overloading

(2) traveling with the load tilted or reached forward and/or elevated

(3) hard braking while traveling forward

(4) sudden acceleration while traveling in reverse

(5) driving with the load down slope on a steep incline or ramp

(6) hitting overhead obstacles or collisions with other objects

(d) A dock type tipover can occur if a truck is steered over the edge, or driven off a dock or ramp. They can also occur if a highway truck or trailer rolls away from the dock or is driven away during loading or unloading.

(e) These trucks are designed with open operator compartments to permit easy ingress and egress. Although there is no sure way in all circumstances to avoid injury, where possible, in the event of an imminent tipover or off the dock accident, the operator should step off and away from the truck. These actions are intended to reduce the risk of serious injury or death.

(f) For nontipover accidents such as an imminent collision with other objects in the work environment, the operator should utilize the protection provided by the compartment by staying within its confines.

(g) Where the environment presents a severe hazard, or there are unusual operating conditions, the user may find it beneficial to establish different, or additional precautions and special operating instructions appropriate for those conditions.

5.4 Loading

5.4.1 Handle only stable or safely arranged loads.

(a) When handling off-center loads that cannot be centered, operate with extra caution.

(b) Handle only loads within the capacity of the truck.

(c) Handle loads exceeding the dimensions used to establish truck capacity with extra caution. Stability and maneuverability may be adversely affected.

(d) Handle loads only with the load engaging means and do not transport loads or miscellaneous items within the operator's compartment or other areas of the truck, unless a secure area has been provided and designated by the user.

5.4.2 When attachments are used, extra care shall be taken in securing, manipulating, positioning, and transporting the load. Operate trucks equipped with attachments as partially loaded trucks when not handling a load.

5.4.3 Completely engage the load with the load-engaging means. Fork length should be at least two-thirds of load length. Where tilt is provided, carefully tilt the load backward to stabilize the load. Caution should be used in tilting backward with high or segmented loads (see paras. 5.2.17 and 5.2.18).

5.4.4 Use extreme care when tilting load forward or backward, particularly when high tiering. Do not tilt forward with load-engaging means elevated except to pick up or deposit a load over a rack or stack. When stacking or tiering, use only enough backward tilt to stabilize the load.

5.4.5 The handling of suspended loads by means of a crane arm (boom) or other device can introduce dynamic forces affecting the stability of a truck that are not considered in the stability criteria of para. 7.6. Grades and sudden starts, stops, and turns can cause the load to swing and create a hazard.

When handling suspended loads:

(a) do not exceed the truck manufacturer's capacity of the trucks as equipped for handling suspended loads

(b) only lift the load vertically and never drag it horizontally

(c) transport the load with the bottom of the load and the mast as low as possible

(d) with load elevated, maneuver the truck slowly and cautiously, and only to the extent necessary to permit lowering to the transport position

(e) use guy lines to restrain load swing whenever possible

5.5 Operator Care of the Truck

5.5.1 At the beginning of each shift and before operating the truck, check its condition, giving special attention to the following:

(a) condition of tires

(b) if pneumatic tires, check inflation pressures

(c) warning and safety devices

(d) lights

(e) battery

(f) controls

(g) lift and tilt systems

(h) load-engaging means

(i) chains and cables

(j) limit switches

(k) brakes

(l) steering mechanism

Copyright ASME International
Provided by IHS under license with ASME
No reproduction or networking permitted without license from IHS Not for Resale

(m) fuel system(s)

(n) additional items or special equipment as specified by the user and/or manufacturer

If the truck is found to be in need of repair or in any way unsafe, or contributes to an unsafe condition, the matter shall be reported immediately to the user's designated authority, and the truck shall not be operated until it has been restored to safe operating condition.

5.5.2 If during operation the truck becomes unsafe in any way, the matter shall be reported immediately to the user's designated authority, and the truck shall not be operated until it has been restored to safe operating condition.

5.5.3 Do not make repairs or adjustments unless specifically authorized to do so.

5.5.4 The engine shall be stopped, and the operator shall not be on the truck while refueling.

5.5.5 Spillage of oil or fuel shall be carefully and completely absorbed or evaporated and fuel tank cap replaced before restarting engine.

5.5.6 Do not use open flames when checking electrolyte level in storage batteries, liquid level in fuel tanks, or the condition of LPG fuel lines and connectors.

6 MAINTENANCE AND REBUILD PRACTICES

6.1 Operation

Operation of powered industrial trucks may be hazardous if maintenance is neglected or repairs, rebuilds, or adjustments are not performed in accordance with the manufacturer's design criteria. Therefore, maintenance facilities (on or off premises), trained personnel, and detailed procedures shall be provided.

6.1.1 Parts manuals and maintenance manuals may be obtained from the truck manufacturer.

6.1.2 In unusual cases not covered by the manuals referred to in para. 6.1.1, consult the truck manufacturer.

6.2 Maintenance and Inspection

Maintenance and inspection of all powered industrial trucks shall be performed in conformance with the following practices.

(a) A scheduled planned maintenance, lubrication, and inspection system shall be followed; consult the manufacturer's recommendations.

(b) Only trained and authorized personnel shall be permitted to maintain, repair, adjust, and inspect industrial trucks, and in accordance with manufacturer's specifications.

6.2.1 When lifting trucks for repair or inspection, trucks shall be lifted in a safe, secure, stable manner. Removal of components such as counterweights or uprights will change the center of gravity and may create an unstable condition.

6.2.2 Before starting inspection and repair of truck

(a) raise drive wheels free of floor or disconnect battery and use chocks or other positive truck-positioning devices.

(b) block load-engaging means, innermast(s), or chassis before working on them.

(c) before disconnecting any part of the engine fuel system of gasoline-powered trucks with gravity feed fuel systems, take precaution to eliminate any possibility of unintentional fuel escape.

(d) before disconnecting any part of the engine fuel system of LP gas-powered trucks, close LP tank valve and run engine until fuel in system is depleted and engine stops. If the engine will not run, close LP tank valve and vent fuel slowly in a nonhazardous area.

(e) disconnect battery before working on the electrical system.

(f) the charger connector shall be plugged only into the battery connector and never into the truck connector.

6.2.3 Operation of the truck to check performance shall be conducted in an authorized area where safe clearance exists.

(a) Before starting to operate the truck

(1) be in operating position

(2) disengage clutch on manual transmission-equipped trucks, or apply brake on power shift or automatic transmission-equipped trucks and electric trucks

(3) place directional controls in neutral

(4) start engine or turn switch of electric trucks to "ON" position

(5) check functioning of lift and tilt systems, load-engaging means, steering, warning devices, and brakes

(b) Before leaving the truck:

(1) stop truck

(2) fully lower the load-engaging means

(3) place directional controls in neutral

(4) apply the parking brake

(5) stop the engine or turn off power

(6) turn off the control or ignition circuit

(7) if the truck must be left on an incline, block the wheels

6.2.4 Avoid fire hazards and have fire protection equipment present in the work area. Do not use an open flame to check the level or to check for leakage of any fluid, especially fuel and battery electrolyte. Do not use open pans of fuel or flammable cleaning fluids for cleaning parts.

6.2.5 Properly ventilate work area and vent exhaust fumes.

(a) The exhaust from all internal combustion power lift truck engines contains carbon monoxide, a colorless, odorless, tasteless, poisonous gas. Carbon monoxide can

Copyright ASME International
Provided by IHS under license with ASME
No reproduction or networking permitted without license from IHS
Not for Resale

become concentrated in poorly ventilated maintenance areas. Exposure to carbon monoxide can result in serious injuries or health hazards, including death.

(b) Common symptoms of carbon monoxide exposure may include headaches, dizziness, and nausea. The smell of internal combustion engine exhaust means carbon monoxide could be present.

(c) If maintenance personnel experience these symptoms, move them into fresh air, seek medical attention as required, and contact your employer so he can monitor "threshold limit values." (Consideration should be given to shutting off the internal combustion engine.)

(d) Maintenance levels affect carbon monoxide emissions. Follow manufacturers' maintenance and adjustment procedures. (See para. 7.2.3.)

6.2.6 Handle LP gas cylinders with care. Physical damage such as dents, scrapes, or gouges may dangerously weaken the tank and make it unsafe for use.

6.2.7 Brakes, steering mechanisms, control mechanisms, warning devices, lights, governors, lift overload devices, guards and safety devices, lift and tilt mechanisms, articulating axle stops, and frame members shall be carefully and regularly inspected and maintained in safe operating condition.

6.2.8 Inspection and Repair of Forks in Service on Fork Lift Trucks

(a) Forks in use shall be inspected at intervals of not more than 12 months (for single shift operations) or whenever any defect or permanent deformation is detected. Severe applications will require more frequent inspection.

(b) Individual Load Rating of Forks. When forks are used in pairs (the normal arrangement), the rated capacity of each fork shall be at least half of the manufacturer's rated capacity of the truck, and at the rated load center distance shown on the lift truck nameplate.

6.2.8.1 Inspection. Fork inspection shall be carried out carefully by trained personnel with the aim of detecting any damage, failure, deformation, etc., which might impair safe use. Any fork that shows such a defect shall be withdrawn from service, and shall not be returned to service unless it has been satisfactorily repaired in accordance with para. 6.2.8.2.

(a) Surface Cracks. The fork shall be thoroughly examined visually for cracks and if considered necessary, subjected to a nondestructive crack detection process, special attention being paid to the heel and welds attaching all mounting components to the fork blank. This inspection for cracks must also include any special mounting mechanisms of the fork blank to the fork carrier including bolt-type mountings and forged upper mounting arrangements for hook or shaft-type carriages. The forks shall not be returned to service if surface cracks are detected.

(b) Straightness of Blade and Shank. The straightness of the upper face of the blade and the front face of the shank shall be checked. If the deviation from straightness exceeds 0.5% of the length of the blade and/or the height of the shank, respectively, the fork shall not be returned to service until it has been repaired in accordance with para. 6.2.8.2.

(c) Fork Angle (Upper Face of Blade to Load Face of the Shank). Any fork that has a deviation of greater than 3 deg from the original specification shall not be returned to service. The rejected fork shall be reset and tested in accordance with para. 6.2.8.2.

(d) Difference in Height of Fork Tips. The difference in height of one set of forks when mounted on the fork carrier shall be checked. If the difference in tip heights exceeds 3% of the length of the blade, the set of forks shall not be returned to service until repaired in accordance with para. 6.2.8.2.

(e) Positioning Lock (When Originally Provided). It shall be confirmed that the positioning lock is in good repair and correct working order. If any fault is found, the fork shall be withdrawn from service until satisfactory repairs have been effected.

(f) Wear

(1) Fork Blade and Shank. The fork blade and shank shall be thoroughly checked for wear, special attention being paid to the vicinity of the heel. If the thickness is reduced to 90% of the original thickness, the fork shall not be returned to service.

(2) Fork Hooks (When Originally Provided). The support face of the top hook and the retaining faces of both hooks shall be checked for wear, crushing, and other local deformations. If these are apparent to such an extent that the clearance between the fork and the fork carrier becomes excessive, the fork shall not be returned to service until repaired in accordance with para. 6.2.8.2.

(g) Legibility of Marking (When Originally Provided). If the fork marking in accordance with para. 7.27.2 is not clearly legible, it shall be renewed. Marking shall be renewed per instructions from original supplier.

6.2.8.2 Repair and Testing

(a) Repair. Only the manufacturer of the fork or an expert of equal competence shall decide if a fork may be repaired for continued use, and the repairs shall only be carried out by such parties.

It is not recommended that surface cracks or wear be repaired by welding. When repairs necessitating resetting are required, the fork shall subsequently be subjected to an appropriate heat treatment, as necessary.

(b) Test Loading. A fork that has undergone repairs other than repair or replacement of the positioning lock and/or the marking, shall only be returned to service after being submitted to, and passing, the tests described in para. 7.27.3, except that the test load shall correspond to 2.5 times the rated capacity marked on the fork.

Copyright ASME International
Provided by IHS under license with ASME
No reproduction or networking permitted without license from IHS Not for Resale

6.2.9 Special trucks or devices designed and approved for hazardous area operation shall receive special attention to ensure that maintenance preserves the original, approved safe operating features.

6.2.10 Fuel systems shall be checked for leaks and condition of parts. Extra special consideration shall be given in the case of a leak in the fuel system. Action shall be taken to prevent the use of the truck until the leak has been corrected.

6.2.11 All hydraulic systems shall be regularly inspected and maintained in conformance with good practice. Hydraulic cylinders, valves, hoses, fittings, and other hydraulic components shall be checked to ensure that *drift* or leakage has not developed to the extent that it would create a hazard.

6.2.12 The truck manufacturer's capacity, operation, and maintenance instruction plates, tags, or decals shall be maintained in legible condition.

6.2.13 Batteries, motors, controllers, limit switches, protective devices, electrical conductors, and connections shall be inspected and maintained in conformance with good practice. Special attention shall be paid to the condition of electrical insulation.

6.2.14 To avoid injury to personnel or damage to equipment, follow the connector manufacturer's procedures when replacing the contacts in any battery connector.

6.2.15 Trucks shall be kept in a clean condition to minimize fire hazards and facilitate detection of loose or defective parts.

6.2.16 Modifications and additions that affect capacity and safe truck operation shall not be performed without manufacturer's prior written approval. Capacity, operation, and maintenance instruction plates, tags, or decals shall be changed accordingly.

6.2.17 Care shall be taken to ensure that all replacement parts, including tires, are interchangeable with the original parts and of a quality at least equal to that provided in the original equipment. Parts, including tires, are to be installed per manufacturer's procedures.

6.2.18 When removing tires, follow industry safety practices. Most importantly, deflate pneumatic tires completely prior to removal. Following assembly of tires and rims, use a safety cage or restraining device while inflating.

6.2.19 When changing batteries on battery-electric trucks, replacement batteries shall be of the service weight that falls within the minimum/maximum range specified on the truck nameplate by the truck manufacturer.

Copyright ASME International
Provided by IHS under license with ASME
No reproduction or networking permitted without license from IHS
Not for Resale

Part III
For the Manufacturer

7 DESIGN AND CONSTRUCTION STANDARDS

7.1 Introduction

This Part sets forth safety standards for the design and construction of low lift and high lift powered industrial trucks at the time of manufacture.

(04) **7.2 Operating Instructions**

7.2.1 The manufacturer shall provide instructions covering the operation of the specific type of truck.

7.2.2 Manufacturers shall provide information with the truck regarding various misuse of the truck that could lead to tipovers and information regarding preferred recommended actions to be taken in the event of tipover or off-dock accidents.

7.2.3 Manufacturers of counterbalanced, center control, high lift trucks that have a sit-down, nonelevating operator shall identify means that the operator may use to assist in keeping his head and torso substantially within the confines of the truck frame and overhead guard if a tipover should occur. Such means should not unduly restrict the operator of the truck in, e.g., the operator's mounting, dismounting, movement and/or visibility.

Operator protection in the event of tipover is intended to reduce the risk of entrapment of the head and torso between the truck and the ground, but may not protect the operator against all possible injury.

7.2.4 Manufacturers shall provide information with internal combustion engine lift trucks relative to the potential hazard of carbon monoxide poisoning due to lift truck exhaust, and the user's responsibility to control carbon monoxide in the workplace. (See paras. 4.11, 5.2.25, and 6.2.5.)

7.2.5 Manufacturers shall provide information in internal combustion engine lift truck maintenance and service manuals regarding recommended maintenance schedules and how to control carbon monoxide emissions.

7.3 Capacity

7.3.1 Capacity shall be established with a load equivalent to an unrestrained homogeneous cube, with overall dimensions twice the specified load center distance.

7.3.2 Capacity shall be based on the strength of the various components of the truck and on stability tests specified in para. 7.6, and shall be expressed in kilograms[1] at a specified load center distance in millimeters[1] that a truck can transport and stack to a specified elevation of the load-engaging means.

7.4 Rated Capacity

7.4.1 The rated capacity shall be established by the manufacturer with a load equivalent to an unrestrained homogeneous cube, with overall dimensions of twice the required load center dimension.

7.4.2 The rated capacity shall be based on the strength of the various components of the truck and on stability tests specified in para. 7.6.

7.4.3 The rated capacity for counterbalanced and noncounterbalanced lift trucks, reach trucks, and counterbalanced front/side loader lift trucks is the maximum weight, expressed in kilograms (pounds), at one of the following standard load centers with the mast vertical, that a truck can transport and stack to a height established by the manufacturer:

(a) 600 mm
(b) 900 mm
(c) 1 200 mm

If any of the foregoing trucks are equipped with attachments, the rated capacity with the attachment shall be established by the truck manufacturer and expressed in kilograms (pounds) at a specified load center and for a specified load elevation.

7.4.4 The rated capacity for high lift platform trucks and single front/side loader trucks is the maximum weight, expressed in kilograms[1] at a specified load center,[1] that a truck can transport and stack to a height[1] established by the manufacturer.

7.4.5 The rated capacity for low lift platform and pallet trucks is the maximum weight, expressed in kilograms,[1] that a truck can lift and transport.

7.5 Nameplates and Markings (See Paras. 7.3 and 7.4)

7.5.1 The manufacturer shall stamp or otherwise permanently affix the serial number to the frame of the truck.

7.5.2 On every truck, the manufacturer shall install a durable, corrosion-resistant nameplate(s), legibly

[1] Pound and/or inch units may be added.

Copyright ASME International
Provided by IHS under license with ASME
No reproduction or networking permitted without license from IHS Not for Resale

inscribed with the following information:

(a) truck model and truck serial number

(b) weight of truck with upper and lesser limits of accuracy shown as a percentage[2]

(c) designation of compliance with the mandatory requirements of this Standard, applicable to the manufacturer

(d) type designation to show conformance with the requirements, such as those prescribed by Underwriters Laboratories, Inc., and Factory Mutual Research Corporation.

7.5.3 Markings authorized by the appropriate nationally recognized testing laboratory shall be installed on approved trucks.

7.5.4 On High Lift Trucks

(a) If the truck is equipped with platform or load carriage and forks, the nameplate shall also show the capacity and load center at maximum elevation of the truck load-engaging means. In addition, the rated capacity and capacities at other load centers and load elevations may be shown.

(b) If the truck is originally equipped with a front-end attachment(s), the truck nameplate shall also be marked to identify the attachment(s) and show the weight of the truck and attachment combination and capacity of the truck and attachment combination at maximum elevation of the load-engaging means with the load laterally centered.[2] If the load can be offset more than a substantial predetermined amount and is to be used in that mode [see para. 7.6.4(i)], then the capacity of the truck and attachment combination at maximum elevation of the load-engaging means shall be given with the load in the maximum offset condition.

7.5.5 On low lift trucks, the nameplate shall also show rated capacity.

7.5.6 On electric trucks, the nameplate shall also show:

(a) truck weight without battery or batteries[2]

(b) minimum and maximum service weights of battery or batteries to be used

(c) nominal voltage for which truck is arranged

(d) when required, maximum rated ampere hour capacity for which truck is equipped

(e) identification of battery or batteries. Identifying letters of batteries are E, EE, EO, and EX, defined as follows:

E = a battery assembled as a unit with a cover, and in conformance with UL 583, for use in type E or ES trucks that do not have a covered battery compartment

EE = a battery assembled as a unit, and in conformance with UL 583, with a cover that can be locked for use in type EE trucks that do not have an enclosed battery compartment with locking means

EO = a battery assembled as a unit without a cover, and in conformance with UL 583, for use in type E trucks with a covered battery compartment, in type ES trucks with an enclosed battery compartment, or in type EE trucks with an enclosed battery compartment with locking means

EX = a battery assembled as a unit, and in conformance with UL 583, with a cover that can be locked for use in type EX trucks that do not have a battery compartment with locking means

7.5.7 For trucks designated type EX, the class and group of hazardous locations in which they are intended to be used shall be shown on the truck.

7.5.8 The nameplates for batteries installed in electric trucks shall show

(a) manufacturer's name

(b) model

(c) battery type identification (E, EO, EE, or EX)

(d) class and group identification of hazardous locations in which a type EX battery can be used when EX is specified in para. 7.5.8(c)

(e) nominal voltage

(f) ampere hour capacity

Batteries for use in electric trucks shall have the battery weight legibly stamped on the battery tray near the lifting means as follows: Service Weight _____kg.[1]

7.5.9 On every removable attachment (excluding fork extensions), the attachment manufacturer shall install a durable, corrosion-resistant nameplate, with the following information legibly and permanently inscribed:

(a) model number

(b) serial number on hydraulically actuated attachments

(c) maximum hydraulic pressure (on hydraulically actuated attachments)

(d) weight[2]

(e) capacity

(f) the following instruction (or equivalent):

CAPACITY OF TRUCK AND ATTACHMENT
COMBINATION MAY BE LESS THAN CAPACITY
SHOWN ON ATTACHMENT.
CONSULT TRUCK NAMEPLATE.

7.5.10 On motorized hand trucks (not hand/rider trucks), the manufacturer shall label in letters at least 40 mm high, "NO RIDING," or an appropriate symbol may be used in lieu thereof.

[2] Weight value to be accurate within ±5%.

Copyright ASME International
Provided by IHS under license with ASME
No reproduction or networking permitted without license from IHS
Not for Resale

7.6 General Stability Criteria: Tilting Platform Tests

7.6.1 Powered industrial trucks shall meet the design stability requirements set forth for the specific type truck.

7.6.2 Design stability is the measure of a truck's resistance to overturning under rigidly controlled static conditions that include consideration for dynamic factors encountered in normal application and operation. Factors that may influence stability include weight, weight distribution, wheelbase, wheel tread, method of suspension, truck speed, and tire and mast deflection under load.

7.6.3 Stability shall be determined by one of the following methods:

(a) Tilting Platform Tests. The tests described for the specific truck type verify truck stability. They may be used for confirming lift truck design and are intended to be applied to prototype trucks, but may also be applied to production trucks on a selective basis as required by the user or manufacturer.

(b) Calculated Stability Values. Calculations based on empirical data for similar trucks that include allowance for manufacturing variations and tire, mast, carriage, attachment, and other deflections, may be used to predict stability with reasonable accuracy.

(c) When comparing calculated and test values, the test values are considered the true measure of stability.

7.6.4 Guidelines for Conducting Tilting Platform Tests

(a) The tests shall be conducted on a completely operational truck.

(b) The test platform shall have a rigid, flat surface; otherwise, measurements or effect of slope may be erratic.

(c) The truck being tested shall be placed on a platform that is initially in a horizontal plane and in the position specified for each of the required tests.

(d) The platform shall be tilted to the slope specified for each of the required tests (see Tables 1–13).

(e) The truck is considered stable if it does not overturn when the test platform is tilted to the specified platform slope values. Overturn is defined as the point at which the truck completely tips over, not the point at which a wheel(s) leaves the platform or the truck frame contacts the platform.

EXCEPTION: For counterbalanced trucks handling freight containers, the overturning value for travel test C4 Table 1(b) is reached when a wheel loses contact with, or any part of the truck makes contact with, the test platform.

(f) When placed on the forks or engaged with an attachment, the center of mass of the test weight shall be located on the longitudinal centerline of the truck.

(g) The coefficient of friction of the platform surface may be increased, if necessary, by an appropriate friction-increasing material.

(h) When attachments are supplied as original equipment, the truck shall be equipped with the attachment, and the test load shall be representative of the capacity of the truck with attachment.

(i) When trucks are fitted with side shifting attachments that may displace the center of gravity, a substantial predetermined amount from the longitudinal center plane of the truck and the truck is to be used in that mode for depositing and retrieving a load with the mast approximately vertical on substantially firm, smooth, level, and prepared surfaces, and an additional lateral stability test shall be conducted with the load fully shifted to the least stable configuration.

(1) For trucks with a rated capacity up to and including 6 300 kg, a substantial predetermined amount shall mean more than 100 mm.

(2) For trucks with a rated capacity over 6 300 kg up to and including 10 000 kg, a substantial predetermined amount shall mean more than 150 mm.

(3) For trucks with a rated capacity over 10 000 kg up to and including 20 000 kg, a substantial predetermined amount shall mean more than 250 mm.

(4) For trucks with a rated capacity over 20 000 kg up to and including 50 000 kg, a substantial predetermined amount shall mean more than 350 mm.

7.6.5 Verification of the Vertical Position of the Mast.

Before proceeding with tests that specify a vertical mast, the vertical position of the mast with the platform level shall be verified.

(a) For trucks with tilting uprights and with the forks approximately 300 mm above the platform, with the stationary mast being vertical in relation to the level test platform, establish a plumb line at the theoretical intersection of the front and top surfaces of the forks to provide a reference point. This point will be used to indicate the maintaining of the original overhang when the forks are elevated to maximum height.

(b) Variations shall be corrected by varying the tilt (when provided) of the mast within the limits imposed by the design of the truck. For trucks with fixed masts, adjustments in the fork or carriage tilt (when provided) shall be used to correct variations. For trucks with nontiltable mast, carriage, and forks, no adjustments shall be made.

(c) When attachments are supplied as original equipment, the same stability tests shall apply, except the plumb line shall be established from the underside of the carriage, attachment, or load, whichever is lowest.

7.6.6 Test Procedure Considerations

(a) Special precautions should be taken to prevent complete overturning of the truck or the displacement of the test load during the course of the tests. Provisions for preventing total overturning of the truck should impose no measurable restriction on the truck until the overturning moment occurs.

Copyright ASME International
Provided by IHS under license with ASME
No reproduction or networking permitted without license from IHS Not for Resale

(b) Be certain of maintaining an accurate load center when the platform is tilted.

(c) Although the test load shall not be restrained in any manner that will affect the deflection of the forks or mast or free movement of the truck as the platform is tilted, the test load shall be secured against possible sliding on the forks in order to sustain an accurate load center and for safety reasons, in case the truck tips past the balance point.

(d) For tests requiring an elevated load, it is permissible to simulate a load by hanging the test load from a framework supported by the forks in the manner described in para. 7.6.6(c). This point of suspension shall be on the centerline of the truck and at a height above the forks and at a distance from the front face of the forks equal to the rated load center dimension before the weight of the test load has caused the forks to deflect. The point of suspension shall be free to pivot in any direction, such as by use of chain or cable.

(e) It is also permissible to use two test loads of equal weight suspended from the ends of a transverse beam fastened to a framework supported by the forks as described in para. 7.6.6(c), provided the loads are suspended from points equidistant from the center dimension before the weight of the test load has caused the forks to deflect. The points of suspension shall be free to pivot in any direction, such as by use of chain or cable. The transverse beam shall be strong enough to prevent deflection that would shift the load center.

(f) If test load is to be supported on top of the forks, care shall be taken to see that it contacts the front face of the forks adjacent to the heel. For this purpose, the edge of the test load shall be chamfered to clear the radius at the heel of the fork.

(g) Upon completion of the tests, checks shall be made to make sure the center of gravity of the load has not changed from the original position. Forward drift may be prevented during test by means of a positive shutoff valve in the hydraulic tilt lines, or equivalent.

(h) On pneumatic tire trucks, inflation of all tires shall be checked to make sure they are in accordance with truck manufacturer's recommendations. This is essential to provide accurate and repeatable results.

7.6.7 Test Load. For all trucks, except those counterbalanced trucks handling freight containers, the test load shall be such that its action corresponds to that of a homogeneous cube, the dimensions of which are twice the designated load center distance D [see Table 1(a), sketch (a) and paras. 7.3 and 7.4]. For counterbalanced trucks handling freight containers, the test load shall consist of a basic load corresponding to the mass of the freight container and a load or force simulating the effect of wind on the container.

7.7 Counterbalanced Lift Trucks: Tilting Platform Tests

7.7.1 Scope. The tests established in Table 1(a) set forth stability requirements to verify the rated capacity and to determine capacity of counterbalanced lift trucks having rated capacities up to, and including, 50 000 kg.

7.7.2 Test Conditions. Test conditions should be as follows:

(a) The general criteria are contained in para. 7.6.

(b) The tests are conducted without the operator.

(c) Point N is the intersection of the centerline of the load axle and the center of the outermost load tire projected to the platform.

(d) Point M is defined as follows:

(1) for trucks having a steering axle, the projection on the platform of the intersection of the longitudinal axis of the truck (C-B) with centerline (E-F) of the axle [see Table 1(a), sketch (g)]

(2) for trucks having steer wheels not connected by a common steer axle, the projection on the platform of the intersection of the longitudinal axis of the truck (C-B) with a line (E-F) connecting the vertical turning axes of the steerable wheels [see Table 1(a), sketch (g)]

(3) for trucks steering by means of a single swivelling wheel, the center of the steerable wheel on the platform [see Table 1(a), sketch (h)]

(4) for trucks steering by means of twin swivelling wheels, the center of the steerable wheel nearer the tilt axis on the platform [see Table 1(a), sketch (i)]

(e) When these tests are used to verify rated capacity, dimension D is the standard load center that applies to the capacity of the truck, i.e., 600 mm, 900 mm, or 1 200 mm [see Table 1(a), sketch (a)].

(f) When these tests are used to determine capacity, use appropriate load center(s) instead of that specified in para. 7.7.2(e).

(g) When trucks are equipped with attachments, the lift heights for Tests No. 2 and No. 4 shall be measured between the level platform and the underside of the load or the attachment, whichever is less.

(h) Blocks (chocks) having a maximum height not exceeding the value indicated below may be used, if necessary, to maintain the initial position of the truck on the test platform. Blocks (chocks), if used, shall not artificially improve stability.

Tire Outside Diameter, d	Maximum Height of Blocks (Chocks)
$d < 250$ mm	25 mm
$d > 250$ mm	$0.1d$

7.8 Counterbalanced Trucks Handling Freight Containers of 6 m Length and Above: Additional Stability Tests

7.8.1 Scope. The test established in Table 1(b) set forth the additional stability requirements to verify the

Copyright ASME International
Provided by IHS under license with ASME
No reproduction or networking permitted without license from IHS
Not for Resale

Table 1(a) Counterbalanced Lift Trucks

Table Number		1	2	3	4
Test		Longitudinal	Longitudinal	Lateral	Lateral
Operation		Stacking	Traveling	Stacking	Traveling
Load		Test load	Test load	Test load	None
Mast Position		Vertical	Full rearward tilt (for trucks with tiltable mast)	Full rearward tilt (for trucks with tiltable mast)	Full rearward tilt (for trucks with tiltable mast)
Lift Height		Maximum	300 mm	Maximum	300 mm
Platform Slope, %	Rated Capacity, Up to and Including 4 500 kg	4	18	6	15 + 1.4*V* (max. 50)
	Rated Capacity, Over 4 500 kg Up to and Including 50 000 kg	3.5			
		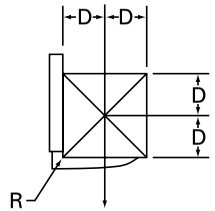 (a)	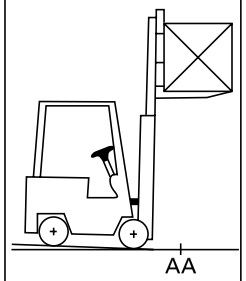 (b)	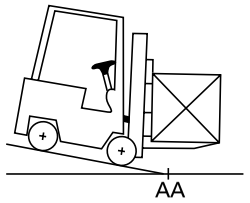 (c)	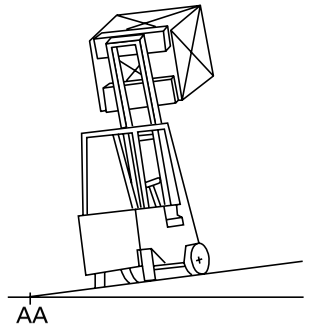 (d)	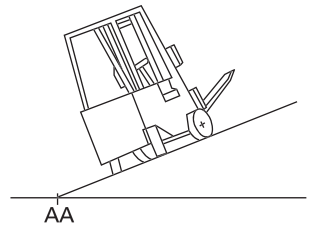 (e)
V = km/h A-A = Tilt axis C-B = Centerline of truck			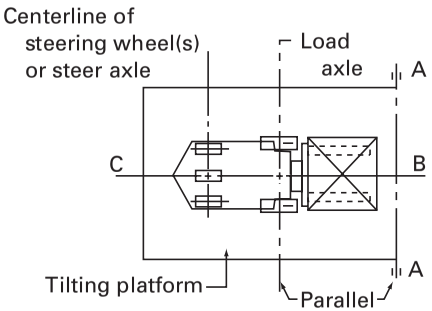 (f)	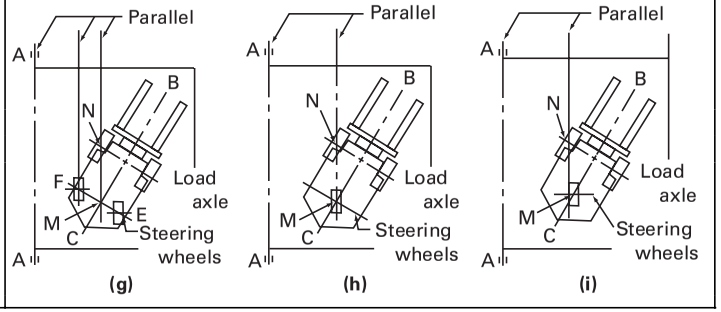 (g) (h) (i)		

Copyright ASME International
Provided by IHS under license with ASME
No reproduction or networking permitted without license from IHS

Not for Resale

Copyright ASME International
Provided by IHS under license with ASME
No reproduction or networking permitted without license from IHS
Not for Resale

(04)

Table 1(b) Counterbalanced Truck Handling Freight Containers

	Test for Longitudinal Stability		Test for Lateral Stability	
Test Number	C1	C2	C3	C4
Test of Stability When	Stacking	Traveling	Stacking	Traveling
Test Load	See para. 7.8.2	See para. 7.8.2	See para. 7.8.2	See para. 7.8.2
Load Center Distance	See para. 7.8.3	See para. 7.8.3	See para. 7.8.3	See para. 7.8.3
Height of Center of Gravity of Test Load	As specified by the manufacturer	Bottom of container located per para. 7.8.1(b)	As specified by the manufacturer	Bottom of container located per para. 7.8.1(b)
Tilt of Mast or Fork Arms	Vertical	Maximum backwards	Maximum backwards	Maximum backwards
Position on Test Slope	Sketches (b) and (f)	Sketches (c) and (f)	Sketches (d) and (g)	Sketches (e) and (g)
Test Slope	3.5%	18%	6%	5 + 1.1 V (max. 20%)
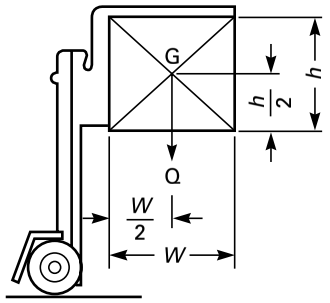 (a)	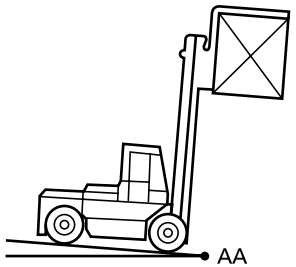 (b)	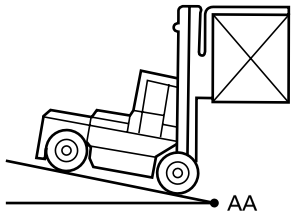 (c)	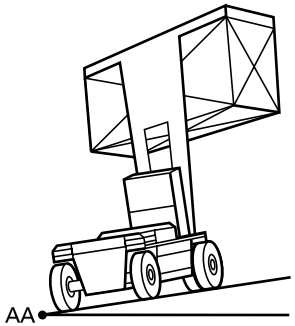 (d)	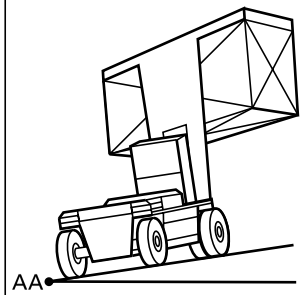 (e)
W = container width h = container height V = km/h A-A = tilt axis C-B = centerline of truck	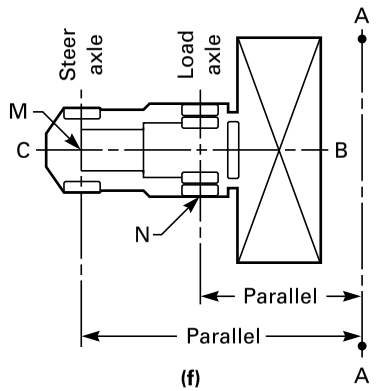 (f)		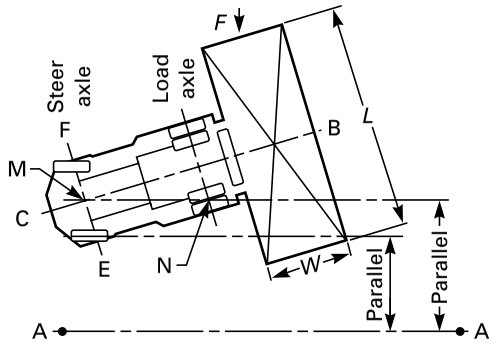 (g)	

rated capacity and to determine capacity of counterbalanced lift trucks handling freight containers of 6 m length and above. These tests are in addition to the tests for counterbalanced lift trucks in para. 7.7.

Meeting these stability tests ensures that counterbalanced trucks handling freight containers have satisfactory stability when reasonably and appropriately used under the following conditions:

(a) Wind speeds during operation do not exceed 12.2 m/s.

NOTE: Alternative ratings for higher wind speeds may be developed by appropriate use of Eqs. (1) and (2) in paras. 7.8.2.2 and 7.8.2.3.

(b) When the truck is traveling forward with the container leading, the container is elevated so that the bottom is not higher than 1 m above the point of maximum depression of the seat cushion under the operator and the mast is fully tilted back. This may not apply where it is not necessary to elevate the container to obtain adequate visibility in the direction of travel (high-level operator or driving in reverse).

7.8.2 Test Load. The test load shall consist of a basic load corresponding to the mass of the freight container and a load or force simulating the effect of wind on the container.

7.8.2.1 Basic Load. The basic test load shall be equivalent to a freight container of the size and mass as determined by the truck capacity and specified by the truck manufacturer, with its center of gravity, *G*, acting at its centroid [see Table 1(b), sketch (a)].

7.8.2.2 Longitudinal Test Wind Loads. For the longitudinal tests, the critical wind force acting on the freight container is calculated by the following formula:

$$F = khlv^2C_{f1} \quad (1)$$

where

C_{f1} = shape of coefficient (=1.3)
F = wind force, N
h = freight container height, m
k = 0.613 N·s^2/m^4
l = freight container length, m
v = wind speed [= 12.2 m/s (Beaufort Scale 6)]

The effect of this force can be simulated in the tests by one of the following methods:

(a) by applying this force in the direction of longitudinal forward overturn acting horizontally through the center of gravity of the test load

(b) by applying a vertical load, in addition to the test load, giving an equivalent moment to the wind force acting when the slope is at the required tilt angle as specified in Table 1(b)

7.8.2.3 Lateral Test Wind Loads. The effect of wind in lateral stability tests has been shown to be significant only when stacking empty containers. For the lateral tests, the critical wind force, *F*, acting on container is calculated by the following formula [see also Table 1(b), sketch (g)]:

$$F = kv^2C_{f2}h\ (1 \sin \alpha + w \cos \alpha) \quad (2)$$

where

C_{f2} = shape of coefficient = 0.8
F = wind force, N
h = freight container height, m
k = 0.613 N·s^2/m^4
l = freight container length, m
v = wind speed [= 12.2 m/s (Beaufort Scale 6)]
w = container width, m
α = angle of lateral tipping axis relative to the longitudinal axis of the truck, deg

The effect of this force can be simulated in the tests by one of the following methods:

(a) by applying this force in a direction normal to the lateral tipping axis of the truck horizontally through the center of gravity of the test load

(b) by applying a vertical load, in addition to the test load giving an equivalent moment to the wind force acting when the slope is at the required tilt angle as specified in Table 1(b)

7.8.3 Test Conditions. Test conditions should be as follows:

(a) The general criteria are specified in para. 7.6.

(b) The tests shall be conducted without an operator.

(c) Point N is the intersection of the centerline of the load axle and the center of the outermost load tire projected to the platform.

(d) Point M is defined as the projection on the platform of the intersection of the longitudinal axis of the truck (C-B) with the centerline (E-F) of the axle [see Table 1(b), sketch (g)].

(e) When using forks, the container shall be positioned with one side of the load touching the front face of the fork shank.

(f) When using an attachment such as a top lift or side lift spreader, the position of the center of gravity shall be determined by the connecting points to the test load [e.g., twist locks into the corner fittings (see Table 1(b), sketch (a)].

(g) When handling means can side shift the load laterally to the centerline of the truck, the load shall be positioned at the midpoint.

(h) When the handling means can adjust the load center longitudinally to the centerline of the truck (i.e., reach), the load shall be placed at the load center specified by the manufacturer for traveling for tests C2 and C4 or stacking for tests C1 and C3 [see Table 1(b)].

(i) When handling empty refrigerated containers with integral refrigeration units (reefers), the load shall be

Copyright ASME International
Provided by IHS under license with ASME
No reproduction or networking permitted without license from IHS Not for Resale

Table 2 Narrow Aisle High Lift Trucks

Test Number	N1	N2
Test	Forward longitudinal	Forward longitudinal
Operation	Stacking	Traveling
Load	Test load	Test load
Load Center, D	600 mm	600 mm
Load Position	Extended (if reach) and mast vertical	Retracted (if reach) and mast tilted fully rearward
Lift Height	Maximum	300 mm
Platform Slope, %	4	18
A-A = tilt axis C-B = centerline of truck	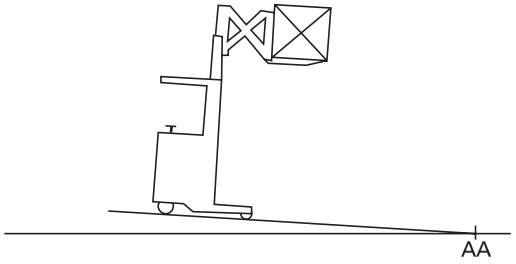 (a)	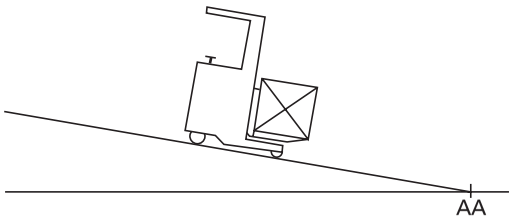 (b)
	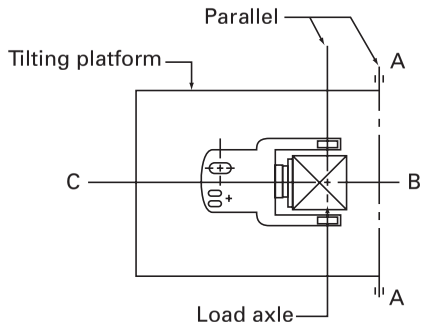 (c)	

Copyright ASME International
Provided by IHS under license with ASME
No reproduction or networking permitted without license from IHS

Not for Resale

--`,,```,,,,````-`-`,,`,,`,`,,`---

side shifted to the location specified by the manufacturer for travel or stacking and the lateral tests conducted with the truck in the least stable direction.

(j) Blocks (chocks) having a maximum height not exceeding 0.1d, where d is the tire outside diameter, may be used, if necessary, to maintain the initial position of the truck on the test platform. Blocks (chocks), if used, shall not artificially improve stability.

7.8.4 Test Requirements. All tests shall be made based on the standard wind speed as specified in para. 7.8.1(a) or at an alternative higher wind speed utilizing forces calculated in paras. 7.8.2.2 and 7.8.2.3, as required.

7.8.4.1 Loaded Container Handling Trucks. All loaded container handling trucks shall be tested in accordance with test C1 in Table 1(b). Trucks that operate under para. 7.8.1(b) shall be tested in accordance with tests C2 and C4 in Table 1(b).

7.8.4.2 Empty Container Handling Trucks. All empty container handling trucks shall be tested in accordance with tests C1 and C3 in Table 1(b). Trucks that operate under para. 7.8.1(b) shall be tested in accordance with tests C2 and C4 in Table 1(b).

7.8.5 The manufacturer shall include container size and the wind speed used for determining the truck's rated capacity and define the appropriate travel and stacking positions in the operator's instructions supplied with the truck.

7.9 Narrow Aisle High Lift Trucks: Tilting Platform Tests

7.9.1 Scope. The tests established in Tables 2, 3, and 4 set forth stability requirements to verify the rated capacity and to determine the capacity of narrow aisle high lift rider trucks and narrow aisle high lift motorized hand trucks having rated capacities up to, and including, 4 500 kg at 600 mm load center.

7.9.2 Test Conditions. Test conditions should be as follows:

(a) The general criteria are contained in para. 7.6.

(b) A weight simulating an operator shall be used only when it will worsen the stability condition being tested. This shall be a 90 kg weight located with its center of gravity centered 150 mm above the Seat Index Point or H-Point of the truck, as determined according to ISO 5353 for sit-down trucks, and centered 1 000 mm above the operator's platform for stand-up trucks.

(c) Point N [see Table 3, sketches (d), (e), (f), and (g)] is the projection to the platform of the intersection of the lateral and longitudinal centerlines of the tire.

(d) Point M is defined as follows:

(1) for trucks steering by means of a single steerable wheel off-center of C-B [see Table 3, sketch (d)], point M is either the midpoint of the centerline of the wheel(s) in the case of a swivel caster or the center of the steerable wheel, whichever indicates the lower stability value

(2) for trucks that steer by means of a single steerable wheel on center with C-B [see Table 3, sketch (e)], point M should be the center point of that wheel

(3) for trucks having a steering axle, the projection on the platform of the intersection of the longitudinal axis of the truck (C-B) with the axis of the axle [see Table 3, sketch (f)]

(4) for trucks with nonarticulated, nonsprung casters or wheel(s), point M is the center of the caster or wheel nearest the tilt axis A-A pivoted to the least stable position [see Table 3, sketch (g)]

(e) When these tests are used to verify rated capacity, dimension D shall be as listed in the table of tests.

(f) When these tests are used to determine capacity, use appropriate load center(s) instead of that specified in the table of tests.

EXCEPTION: Tests N3 and N6 shall always be conducted at the least stable load center.

(g) When trucks are equipped with attachments, the lift heights for all tests shall be measured between level platform and the underside of the load or the attachment, whichever is less.

(h) The truck shall be immobilized by the application of brake(s) or by the use of 12 mm high chocks to maintain truck position on the test platform.

7.10 High Lift Order Picker Trucks: Tilting Platform Tests

7.10.1 Scope. The tests established in Tables 5 and 6 set forth stability requirements to verify rated capacity and to determine capacity of high lift order picker trucks with traction control on the lifting devices, steer wheel brakes, and not restrained by external means, having rated capacities up to and including 4 500 kg at 600 mm load center.

7.10.2 Test Conditions. Test conditions should be as follows:

(a) the general criteria contained in para. 7.6.

(b) a weight simulating an operator shall be used. This shall be a 90 kg weight located with its center of gravity 1 000 mm above the center of the operator's platform.

(c) Point N [see Table 6, sketches (b), (c), (d), and (e)] is the projection to the platform of the intersection of the lateral and longitudinal centerlines of the tire.

(d) Point M is defined as follows:

(1) for trucks having nonarticulated steer wheel(s), sprung caster or wheels [see Table 6, sketch (b)], the center of the steering wheel(s) on the platform

(2) for trucks having nonarticulated, nonsprung caster or wheel(s) [see Table 6, sketches (c) and (d)], the center of the nonarticulated nonsprung caster or wheel(s)

Copyright ASME International
Provided by IHS under license with ASME
No reproduction or networking permitted without license from IHS Not for Resale

Table 3 Narrow Aisle High Lift Trucks

Test Number	N3	N4	N5
Test	Lateral	Lateral	Lateral
Operation	Stacking	Stacking	Traveling
Load	Test load	None	None
Load Center, D	400 mm or 600 mm [see para. 7.9.2(f)]	None	None
Load Position	Retracted (if reach) and vertical, or tilted fully rearward or upward to position of least stability	Retracted (if reach) and vertical, or tilted fully rearward or upward to position of least stability	Retracted (if reach) and vertical, or tilted fully rearward or upward to position of least stability
Lift Height	Maximum	Maximum	300 mm
Platform Slope, %	6	8	15 + 1.1*V* (max. 50)
V = km/h A-A = tilt axis C-B = centerline of truck	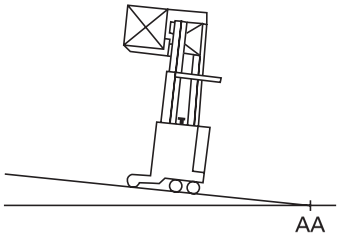 (a)	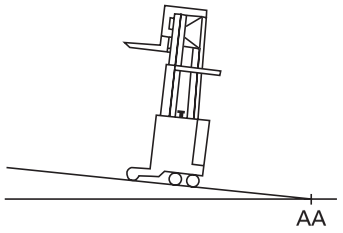 (b)	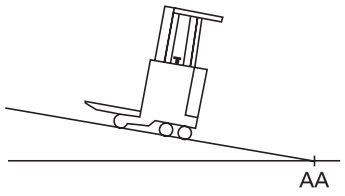 (c)
	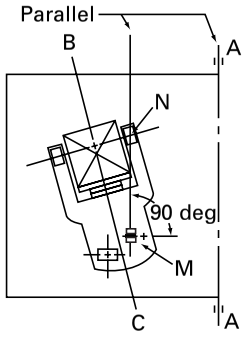 (d)	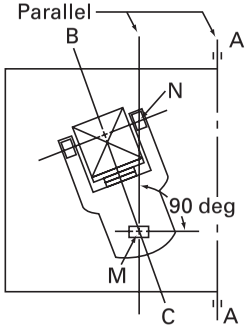 (e)	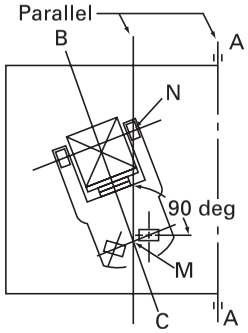 (f)	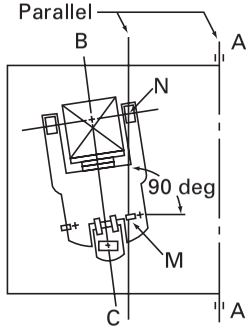 (g)

Copyright ASME International
Provided by IHS under license with ASME
No reproduction or networking permitted without license from IHS
Not for Resale

Table 4 Narrow Aisle High Lift Trucks

Test Number	N6	N7	N8
Test	Rearward longitudinal	Rearward longitudinal	Rearward longitudinal
Operation	Stacking	Stacking	Traveling
Load	Test load	None	None
Load Center, D	400 mm	None	None
Load Position	Retracted (if reach) and vertical, or tilted fully rearward or upward to position of least stability	Retracted (if reach) and vertical, or tilted fully rearward or upward to position of least stability	Retracted (if reach) and vertical, or tilted fully rearward or upward to position of least stability
Lift Height	Maximum	Maximum	300 mm
Platform Slope, %	14	14 — Single rear wheel drive (or brake) 18 — Dual rear wheel drive (or brake)	15 + 1.56V + 0.5G
V = km/h G = rated grade ability, % A-A = tilt axis C-B = centerline of truck	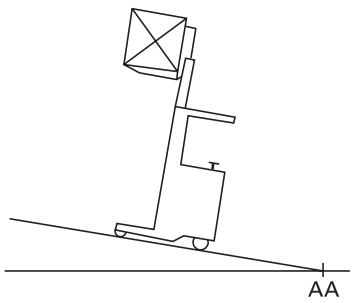 (a)	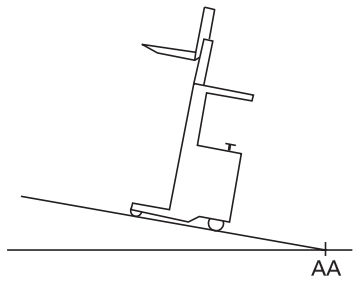 (b)	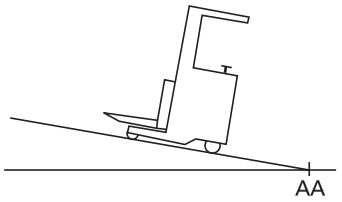 (c)
	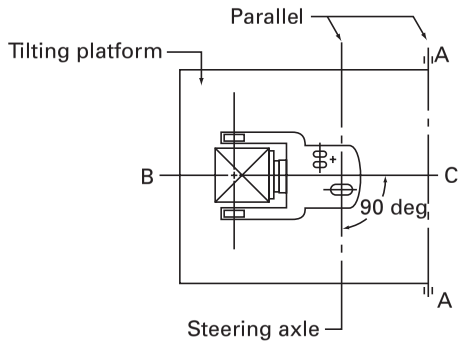 (d)		

Copyright ASME International
Provided by IHS under license with ASME
No reproduction or networking permitted without license from IHS

Not for Resale

(3) for trucks having single, double, or articulated steer wheel(s) [see Table 6, sketch (e)], the projection on the platform of the intersection of the longitudinal axis of the truck (C-B) with a line (E-F)

(e) when these tests are used to verify rated capacity, dimension *D* is 600 mm [see Table 1(a), sketch (a)].

(f) when these tests are used to determine capacity, use appropriate load center(s) instead of that specified in para. 7.10.2(e).

EXCEPTION: Tests OP2 and OP4 shall always be conducted at least stable load center.

(g) when trucks are equipped with attachments, the lift heights for all tests shall be measured between the level platform and the underside of the load or the attachment, whichever is less.

(h) the truck shall be immobilized by the application of brake(s) or by the use of 12 mm high chocks to maintain truck position on the test platform.

(i) for trucks with tilting masts, the mast shall be vertical or at full rearward tilt, whichever is less stable. For trucks with tilting forks, the forks shall be horizontal or at full rearward tilt, whichever is less stable [see Table 5, sketches (a) through (d) and Table 6, sketches (a) through (e)].

(j) any combination of fork height and travel speed(s) attainable that produces the least platform slope value. Travel speed *V* can be zero [see Table 5, sketches (a) through (d)].

(k) unrestricted steering (see Table 6).

(l) slope value applies to trucks operated in a guided aisle (guided for restricted steering purposes only) during stacking operations, or where the steerable wheel(s) can be positioned not more than 10 deg from the straight forward or reverse travel direction (see Table 6).

7.11 Counterbalanced Front/Side Loader Lift Trucks: Tilting Platform Tests

7.11.1 Scope. The tests established in Tables 7, 8, and 9 set forth stability requirements to verify the rated capacity and to determine the capacity of counterbalanced front/side loader lift trucks with rated capacities up to and including 13 600 kg at 600 mm load center.

7.11.2 Test Conditions. Test conditions should be as follows:

(a) the general criteria contained in para. 7.6.

(b) the tests are to be conducted without the operator.

(c) Point N [see Table 8, sketches (e), (f), (g), and (h) and Table 9, sketches (c) and (d)] is the projection to the platform of the intersection of the lateral and longitudinal centerlines of the tire.

(d) Point M [see Table 8, sketches (e), (f), (g), and (h) and Table 9, sketches (c) and (d)] is defined as follows:

(1) for trucks having a steerable axle: the projection on the platform of the intersection of the longitudinal axis of the truck (C-B) with centerline (E-F) of the axle

(2) for trucks having steerable wheels not connected by a common axle, see Table (8), sketch (f)

(e) when these tests are used to verify rated capacity, dimension *D* is 600 mm [see Table 1(a), sketch (a)].

(f) when these tests are used to determine capacity, use appropriate loads and load centers instead of that specified in para. 7.11.2(e).

(g) the truck should be immobilized by application of braking device(s) and/or by the use of 12 mm high chocks to maintain truck position on the test platform.

(h) Tests FS1, FS2, FS3, and FS4 apply to counterbalanced front/side loader lift trucks with fixed masts. Tests FS1, FS2, FS3, FS4, FS5, and FS6 apply to counterbalanced front/side loader lift trucks with tiltable masts capable of pivoting and shifting. These trucks may have an articulating steerable axle.

(i) unrestricted steering (see Tables 8 and 9).

(j) slope value applies to trucks operated in a guided aisle (guided for restricted steering purposes only) during stacking operations, or where the steerable wheel(s) can be positioned not more than 10 deg from the straight forward or reverse travel direction (see Tables 8 and 9).

7.12 Operator-Up Counterbalanced Front/Side Loader Lift Trucks: Tilting Platform Tests

7.12.1 Scope. The tests established in Tables 10 through 12 and Fig. 1 set forth stability requirements to verify the rated capacity and to determine the capacity of operator-up front/side loader lift trucks.

7.12.2 Test Conditions. Test conditions should be as follows:

(a) the general criteria contained in para. 7.6.

(b) a weight simulating an operator shall be used. This shall be a 90 kg weight located with its center of gravity centered 250 mm above the compressed operator's seat for sit-down trucks and centered 1 000 mm above the operator's platform for stand-up trucks.

(c) Point N or N_1, [see Table 12, sketches (c) and (d), and Fig. 1, sketches (e), (f), (g), and (h)] is the projection to the platform of the intersection of the lateral and longitudinal centerlines of the tire.

NOTES:

(1) For dual wheel assembly use centerlines of the outside tire.

(2) For nonarticulating tandem wheel assembly use centerlines of the furthermost outside tire when projecting centerline MN.

(3) For articulating tandem wheel assembly use intersection of articulating pivot axis and longitudinal centerline of the tires.

(d) point M or M_1 is defined for the following suspension types:

(1) three-wheel suspension on center [see Fig. 1, sketch (a)]

(2) three-wheel suspension off center [see Fig. 1, sketch (b)]

(3) four-wheel suspension, three solid and one sprung [see Fig. 1, sketch (c)]

Copyright ASME International
Provided by IHS under license with ASME
No reproduction or networking permitted without license from IHS
Not for Resale

Table 5 High Lift Order Picker Trucks

Test Number	OP 1	OP 2	OP 3	OP 3
Test	Longitudinal	Longitudinal	Longitudinal	Longitudinal
Load	Test load	Test load	None	None
Mast or Fork Tilt	See para. 7.10.2(i)	See para. 7.10.2(i)	See para. 7.10.2(i)	See para. 7.10.2(i)
Lift Height	See para. 7.10.2(j)	See para. 7.10.2(j)	See para. 7.10.2(j)	300 mm
Platform Slope, %	4 + 1.24V + 1.24V	8 + 1.24V	8 + 1.24V	8 + 1.24V + G
V = km/h G = rated grade ability, % A-A = tilt axis C-B = centerline of truck	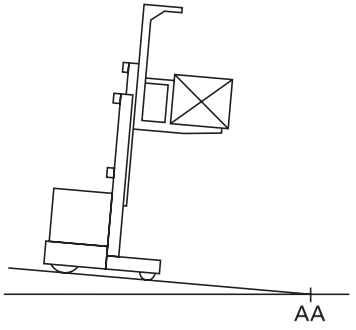 (a)	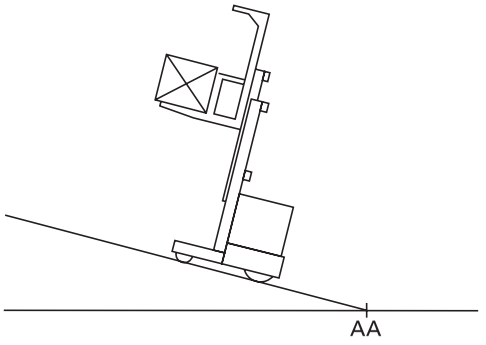 (b)		
	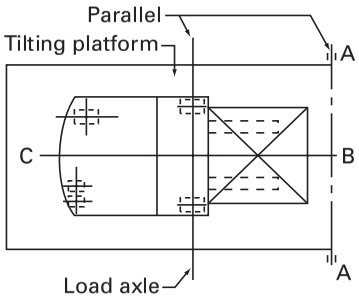 (c)	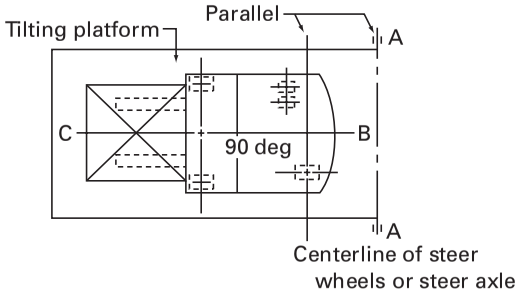 (d)		

Copyright ASME International
Provided by IHS under license with ASME
No reproduction or networking permitted without license from IHS

Not for Resale

Table 6 High Lift Order Picker Trucks

Test Number		OP-4	OP-5
Test		Lateral	Lateral
Load		Test load	None
Mast or Fork Tilt		See para. 7.10.2(i)	See para. 7.10.2(i)
Lift Height		See para. 7.10.2(j)	See para. 7.10.2(j)
Platform Slope, %	See para. 7.10.2(k)	6 + 1.24*V*	6 + 2.48*V*
	See para. 7.10.2(l)	6	6
V = km/h A-A = tilt axis C-B = centerline of truck		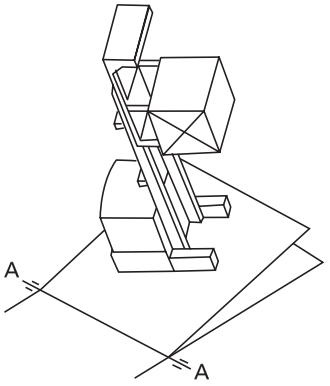 (a)	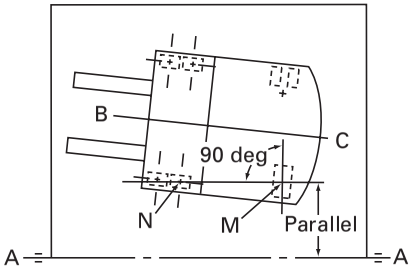 (b) Nonarticulated Steer Wheel(s)
		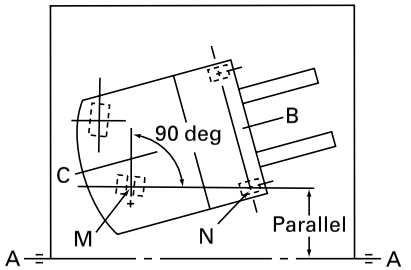 (c) Nonarticulated Caster or Wheel(s)	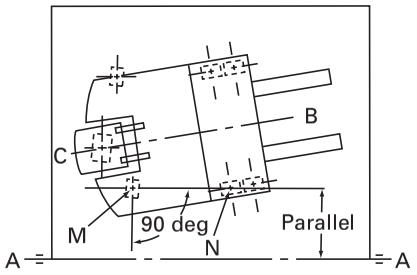 (d) Nonarticulated Nonsprung Caster or Wheel(s)
		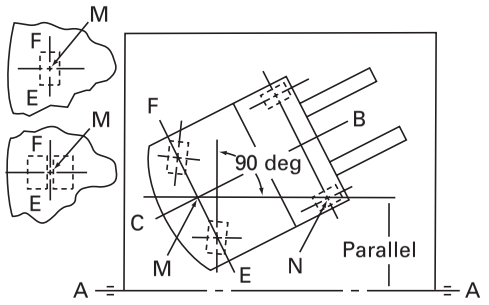 (e) Single– or Dual–Articulated Steer Wheel(s)	

Copyright ASME International
Provided by IHS under license with ASME
No reproduction or networking permitted without license from IHS
Not for Resale

Table 7 Counterbalanced Front/Side Loader Lift Trucks

Test Number		FS1	FS1	FS2	FS2
Test		Longitudinal	Longitudinal	Longitudinal	Longitudinal
Operation		Stacking	Stacking	Traveling	Traveling
Load		Test load	Test load	Test load	Test load
Mast Position		Vertical	Not adjustable	Full rearward tilt	Not adjustable
Mast Mounting		Pivoting	Fixed	Pivoting	Fixed
Load Carrier Position		Least stable condition	Least stable condition	Least stable condition	Least stable condition
Lift Height		Maximum	Maximum	300 mm	300 mm
Platform Slope, %	Rated Capacity Up to and Including 4 500 kg	4	4	18	18
	Rated Capacity Over 4 500 kg Up to and Including 13 600 kg	3.5	3.5		
A-A = tilt axis C-B = centerline of truck		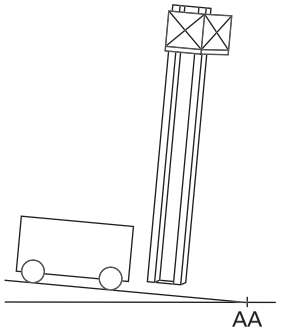 (a)	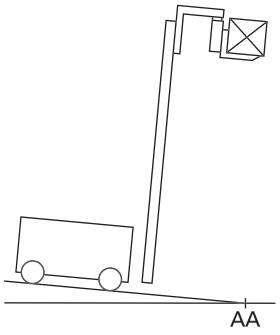 (b)	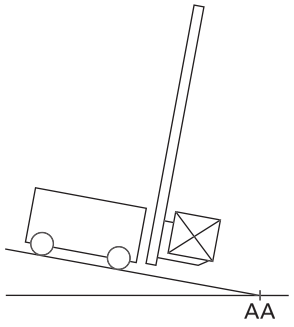 (c)	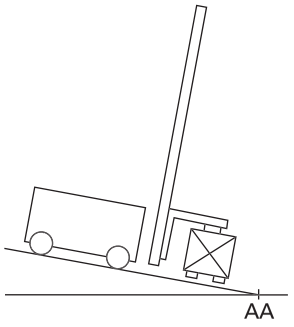 (d)
		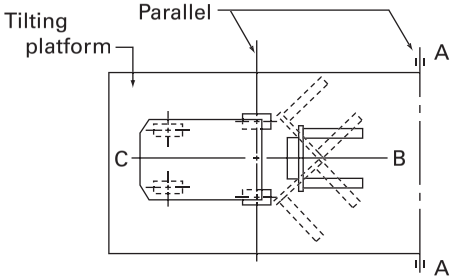 (e)		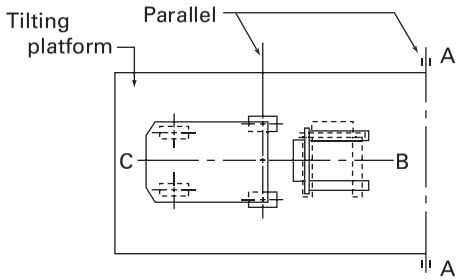 (f)	

Copyright ASME International
Provided by IHS under license with ASME
No reproduction or networking permitted without license from IHS

Not for Resale

Table 8 Counterbalanced Front/Side Loader Lift Trucks

Test Number	FS3	FS3	FS4	FS4
Test	Lateral	Lateral	Lateral	Lateral
Operation	Stacking	Stacking	Traveling	Traveling
Load	Test load	Test load	None	None
Mast Position	Vertical	Not adjustable	Full rearward tilt	Not adjustable
Mast Mounting	Pivoting	Fixed	Pivoting	Fixed
Load Carrier Position	Least stable condition	Least stable condition	Least stable condition	Least stable condition
Lift Height	Maximum	Maximum	300 mm	300 mm
Platform Slope, %	6 [see para. 7.11.2(i)] or 4 [see para. 7.11.2(j)]	6 [see para. 7.11.2(i)] or 4 [see para. 7.11.2(j)]	15 + 1.4*V*	15 + 1.4*V*
V = km/h A-A = tilt axis C-B = centerline of truck	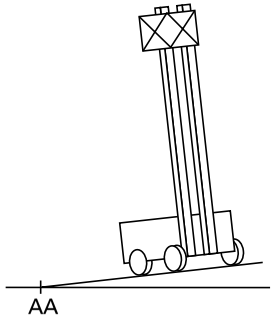 **(a)**	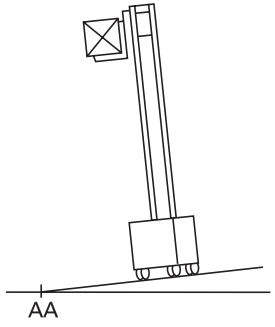 **(b)**	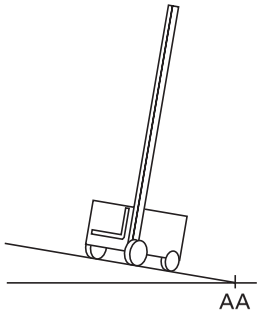 **(c)**	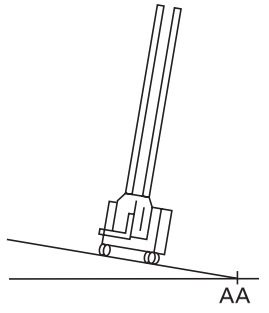 **(d)**
	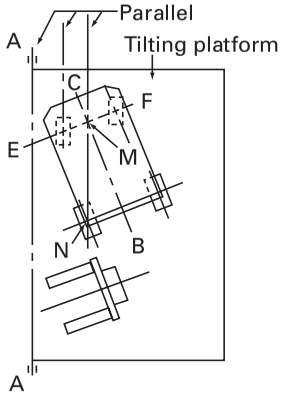 **(e)**	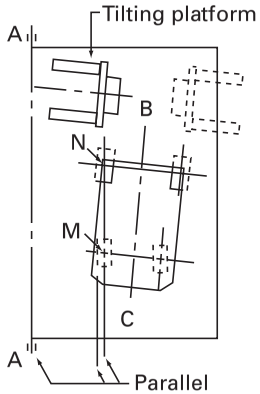 **(f)**	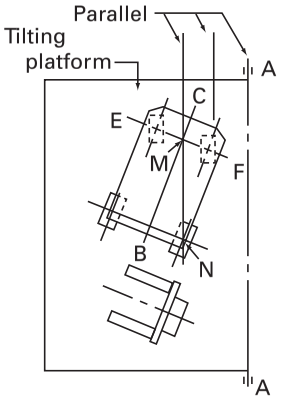 **(g)**	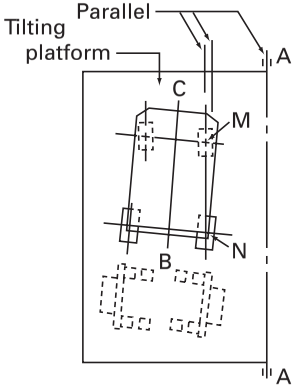 **(h)**

Copyright ASME International
Provided by IHS under license with ASME
No reproduction or networking permitted without license from IHS
Not for Resale

---,,,

Table 10 Operator-Up Counterbalanced Front/Side Loader Lift Truck

Test Number	OPFS-1	OPFS-2
Test	Longitudinal forward	Longitudinal forward
Load	Test load	Test load
Load Carrier Position	Least stable side extended	Least stable aisle transport
Lift Height(s)	See para. 7.12.2(m)	See para. 7.12.2(m)
Platform Slope, %	4 + 0.62*V*	4 + 1.24*V*
V = km/h A-A = tilt axis C-B = centerline of truck	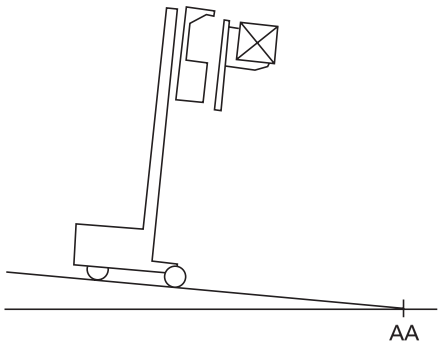 (a)	
	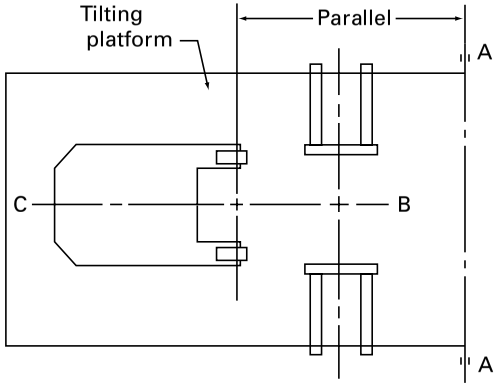 (b)	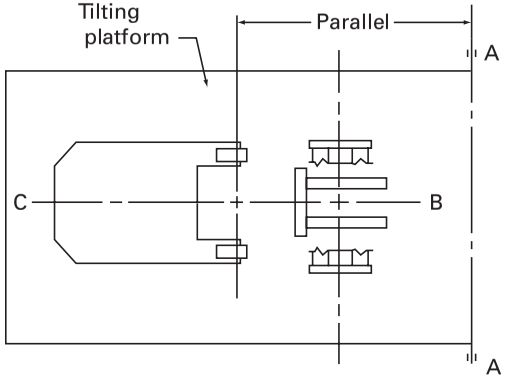 (c)

Copyright ASME International
Provided by IHS under license with ASME
No reproduction or networking permitted without license from IHS

Not for Resale

Table 11 Operator-Up Counterbalanced Front/Side Loader Lift Truck

Test Number	OPFS-3	OPFS-4	
Test	Longitudinal rearward	Longitudinal rearward	
Load	Test load	No load	
Load Carrier Position	Least stable aisle transport	Least stable aisle transport	
Lift height(s)	See para. 7.12.2(m)	See para. 7.12.2(m)	300 mm
Platform Slope, %	8 + 1.24*V*	8 + 1.24*V*	8 + 1.24*V* + *G*
V = km/h A-A = tilt axis C-B = centerline of truck *G* = rated grade ability, %	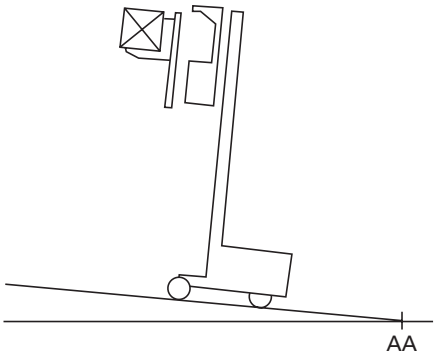 **(a)**		
	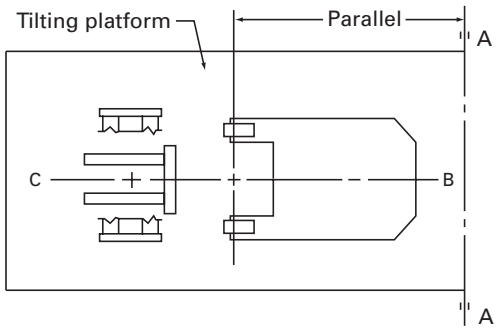 **(b)**		

(4) four-wheel suspension, articulated on center axle [see Fig. 1, sketch (d)]

(5) four-wheel suspension, articulated off center axle [see Fig. 1, sketch (e)]

(6) four-wheel solid suspension [see Fig. 1, sketch (f)]

(7) five-wheel suspension, three solid and two sprung [see Fig. 1, sketch (g)]

(8) five wheel suspension, four solid and one articulated [see Fig. 1, sketch (h)]

(9) five-wheel suspension, two solid and three articulated [see Fig. 1, sketch (i)]

(e) point M or M_1 is defined as follows:

(1) for sketches (a), (b), (c), (f), (g) and (h), of Fig. 1, the projection to the platform of the intersection of the lateral and longitudinal centerlines

(2) for sketches (d) and (e) of Fig. 1, the projection to the platform of the intersection of the pivot axis of the axle and the centerline between the tires

(3) for sketch (i) of Fig. 1, the projection to the platform of the intersection of the pivot axis of the three-wheel articulated frame and the centerline between the tires

NOTE: Center point of a dual wheel assembly is the midpoint between the intersection of the lateral and longitudinal centerlines of each tire.

(f) casters and tires that pivot and are located nearest the tilting axis of the tilt table are to be positioned for least stability. Their lateral axis is to be parallel to the table tilt axis.

(g) lateral tests are to be conducted about the truck axis M-N or M_1-N_1 that provides the least stability. Axis M-N or M_1-N_1 on the down side of tilt table to be parallel to axis A-A.

(h) when these tests are used to verify rated capacity, dimension *D* is 600 mm [see Table 1(a), sketch (a)].

Copyright ASME International
Provided by IHS under license with ASME
No reproduction or networking permitted without license from IHS Not for Resale

(i) when these tests are used to determine capacity, use appropriate loads and load center(s) instead of that specified in para. 7.12.2(e).

(j) the truck should be immobilized by application of braking device(s) and/or by the use of chocks approximately 10% of the diameter of the wheel, but not less then 25 mm nor more than 50 mm high.

(k) when trucks are equipped with attachments, the lift heights for Test OPFS-4 should be measured between the level platform and the load support surface of the load or of the underside of the attachment, whichever is less.

(l) unrestricted steering (see Tables 11 and 12).

(m) slope value applies to trucks where travel is reduced to zero speed when the steerable wheel(s) is positioned more than 10 deg from the straight forward or reverse travel direction or operated in a guided aisle (guided for restricted steering purposes only).

(n) Maximum fork height for an established travel speed(s), including zero travel speed.

7.13 Single Sided Loader Lift Trucks: Tilting Platform Tests

7.13.1 Scope. The tests established in Table 13 set forth stability requirements to verify the rated capacity and to determine the capacity of single side loader lift trucks having rated capacity up to and including 13 600 kg.

7.13.2 Test Conditions. Test conditions should be as follows:

(a) the general criteria contained in para. 7.6.

(b) the tests are conducted without the operator.

(c) all wheels to be in straight-ahead position as shown in Table 13, sketches (b) through (h).

(d) the vertical load dimension is 1 200 mm. Dimension *D* is the horizontal rated load center distance as specified by the manufacturer [see Table 13, sketch (a)].

(e) the truck shall be immobilized by the application of a brake(s) or by the use of 12 mm high chocks to maintain truck position on the test platform.

7.14 Steering Arrangements: Rider Trucks

7.14.1 Stand-up rider trucks employing a horizontal lever (vertical motion) or pump handle steering control shall steer as follows: The handle shall be mounted in such manner that the operator will steer with his left hand when facing the load end of the truck. An upward movement of the handle from the horizontal position shall steer the truck to the operator's right when moving with load end leading.

7.14.2 Stand-up rider trucks employing a horizontal lever (horizontal motion) or tiller bar steering control shall steer as follows: The handle shall be mounted in such a manner that the operator will steer with his left hand when facing the load end of the truck. Movement of the handle clockwise shall steer the truck to the operator's right when moving with the load end leading.

7.14.3 Trucks employing a handwheel with the operator facing the load end shall steer such that clockwise rotation of the handwheel will steer the truck to the operator's right when the truck is moving with load end leading.

7.14.4 Trucks employing a handwheel with the operator facing the load end (where steering must be accomplished with one hand) shall steer such that when the truck is traveling with load end leading, clockwise rotation of the handwheel shall steer the truck to the operator's right. (This is termed *directional forward steering*.)

EXCEPTION: For consistency of truck steering on standup end control rider trucks used in a plant where all directional reverse steering (see para. 7.14.5) is employed on these types of trucks, directional reverse steering may be used.

7.14.5 Trucks employing a handwheel with the operator facing at a right angle to the normal line of travel shall steer such that when the truck is traveling with load end trailing, clockwise rotation of the handwheel shall steer the truck clockwise.

7.14.6 Side loader trucks employing a handwheel with the operator facing at a right angle to the normal line of travel shall steer such that when the truck is traveling in a direction to the operator's right, a clockwise rotation of the handwheel shall steer the truck clockwise.

7.14.7 Motorized hand and hand/rider trucks employing a steering tongue control that extends beyond the confines of the truck shall steer such that with the operator facing in the direction of travel, with the load end trailing, clockwise movement of the steering tongue shall steer the truck clockwise.

7.14.8 Order picker high lift trucks employing a handwheel with the operator facing the direction of normal forward travel (with load end trailing) shall steer such that clockwise rotation of the handwheel shall steer the truck to the operator's right when the truck is moving forward. The handwheel shall be located to permit convenient operation by the left hand.

7.15 Steering Requirements

7.15.1 All steering controls, except for motorized hand and hand/rider trucks employing a steering tongue, shall be confined within the plan view outline of the truck or guarded against injury to the operator during movement of the controls when passing obstacles such as walls, columns, and racks.

7.15.2 Steering handles on motorized hand and motorized hand/rider trucks employing a steering tongue shall have means to provide protection for the

Copyright ASME International
Provided by IHS under license with ASME
No reproduction or networking permitted without license from IHS
Not for Resale

Table 12 Operator-Up Counterbalanced Front/Side Loader Lift Truck

Test Number		OPFS-5	OPFS-6	OPFS-7
Test		Lateral	Lateral	Lateral
Load		Test load	Test load	None
Load Carrier Position		Least stable side extended	Least stable aisle transport	Least stable aisle transport
Lift Height(s)		Maximum	See para. 7.12.2(m)	See para. 7.12.2(m)
Platform Slope, %	Type	6	6 + 1.24V	6 + 2.48V
		4	6	6

V = km/h
A-A = tilt Axis
C-B = centerline of truck
G = rated grade ability, %

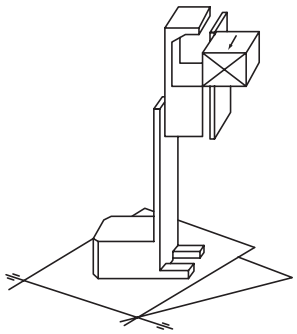

(a)

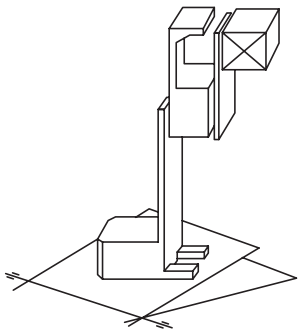

(b)

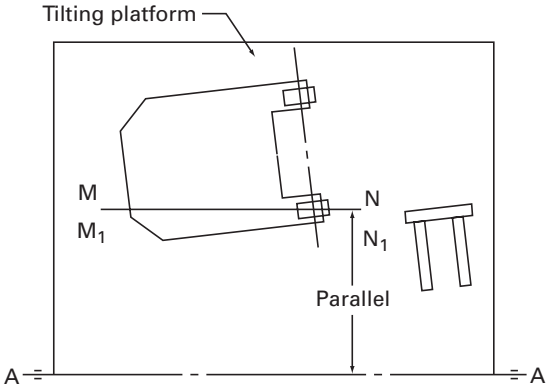

(c)

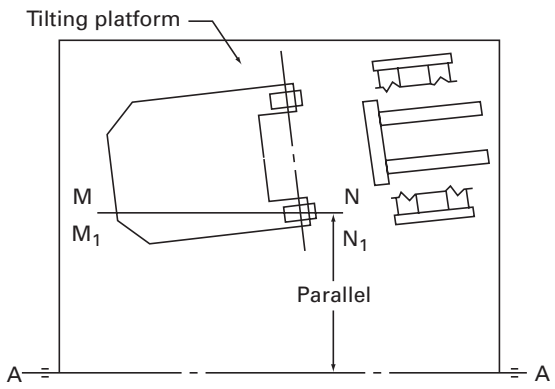

(d)

operator's hands against injury from items such as doors, walls, columns, and racks.

7.15.3 Where steering must be accomplished with one hand and a steering handwheel is used, a steering knob(s) or equivalent shall be used to promote safe and effective operation. The steering handwheel and knob configuration shall be a design that will minimize the hazard from a spinning handwheel due to a road reaction feedback, or the steering mechanism shall be of a type that prevents road reactions from causing the steering handwheel to spin. A steering knob(s) shall be within the periphery of the steering handwheel.

7.15.4 Where steering can be accomplished with either hand, and the steering mechanism is of a type that prevents road reactions from causing the handwheel to spin (power steering or equivalent), steering knobs may be used. When used, a steering knob shall be of a type that is engaged by the operator's hand from the top, and shall be within the periphery of the steering handwheel.

7.16 Service Brake System Performance for Trucks Up to and Including 50 000 kg Capacity

7.16.1 A service brake system that meets the performance requirements of this section shall be provided.

Copyright ASME International
Provided by IHS under license with ASME
No reproduction or networking permitted without license from IHS
Not for Resale

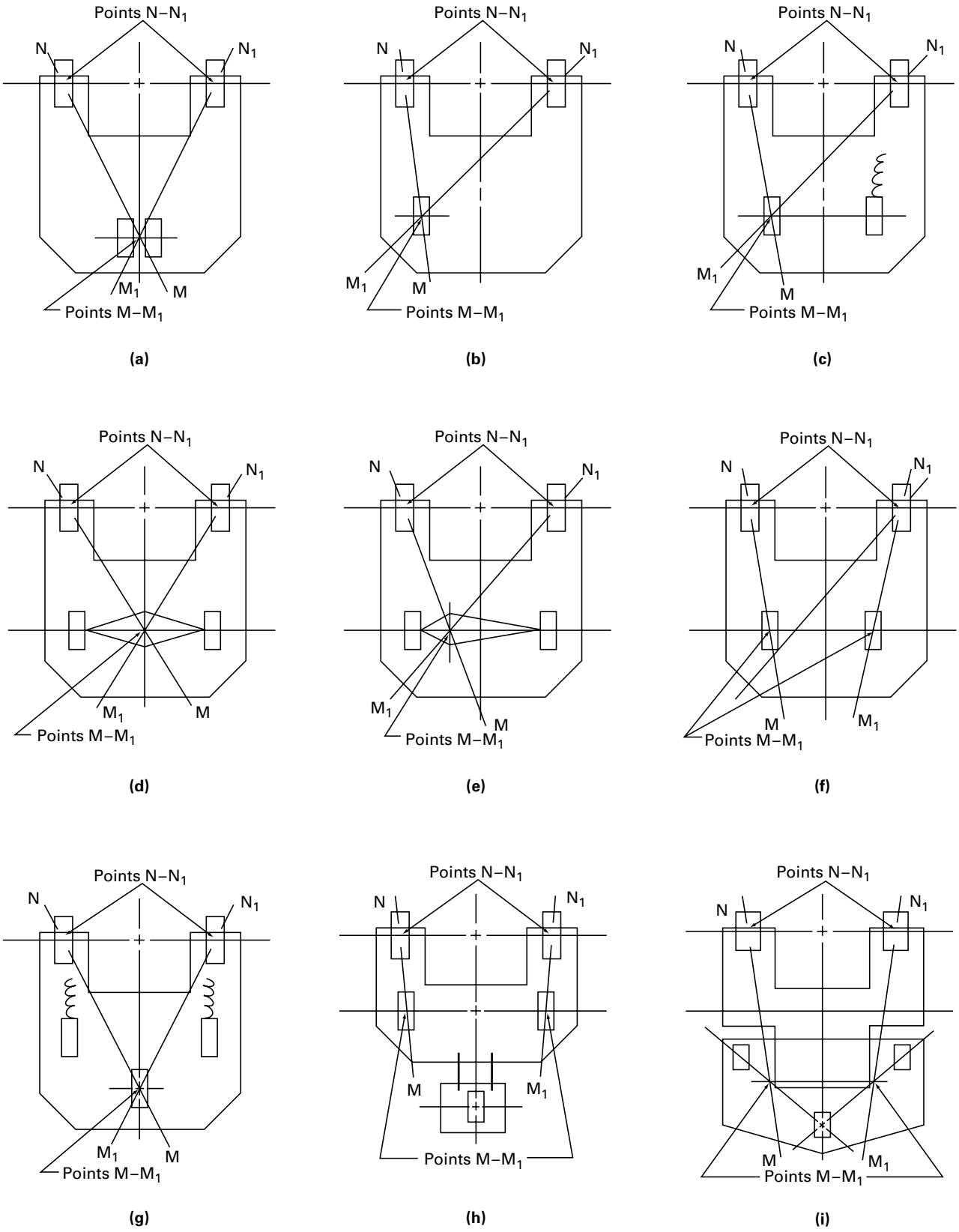

Fig. 1 Operator-Up Counterbalanced Front/Side Loader Lift Truck

Copyright ASME International
Provided by IHS under license with ASME
No reproduction or networking permitted without license from IHS
Not for Resale

Table 13 Single Side Loader Lift Trucks

Test Number	S1	S2	S3	S4
Load	Test load	Test load	None	None
Load Carrier Position	Elevated, extended	Elevated, retracted	Elevated, retracted	Lowered, retracted, least stable condition
Mast Position	Vertical	Full rearward tilt	Full rearward tilt	Full rearward tilt [sketch (d)] Vertical [sketch (h)]
Platform Slope, %	4	8 + 0.62*V* (max. 14)	8 + 0.62*V* (max. 14)	18 + 0.62*V* (max. 40)
	(a)	**(b)**	**(c)**	**(d)**
	(e)	**(f)**	**(g)**	**(h)**

V = km/h
A-A = tilt axis, sketches (d), (e), (f), and (g)
B-B = tilt axis, sketch (h)

--`,,```,,,,````-`-`,,`,,`,`,,`---

Copyright ASME International
Provided by IHS under license with ASME
No reproduction or networking permitted without license from IHS
Not for Resale

7.16.2 The service brake system performance shall be measured by one of two tests, the Drawbar Drag Test [see para. 7.16.5(a)] or the Stopping Distance Test [see para. 7.16.5(b)].

7.16.3 Brake Control Force Limits

(a) For pedals having a downward movement to apply the brakes, the required brake performance shall be attained with a pedal force of not more than 670 N.

(b) For brake pedals having an upward movement to apply brakes, the required brake performance shall be attained with the pedal fully released; however, the brake linkage shall be such that the pedal will be fully depressed and the brakes released by a force of not more than 290 N.

(c) For handgrip (squeeze) operated brakes, the required brake performance shall be attained with an operating force of not more than 225 N.

(d) Other types of brake actuation, including those applied to position of the steering tongue, may be used.

7.16.4 Test Conditions. Test conditions should be as follows:

(a) Road surface shall be level clean asphalt, brushed concrete, or equivalent, and of adequate length to permit safe conduct of the test. When using the stopping distance test procedure, it shall also be of sufficient length to permit stabilized travel speed of the truck before application of the brakes.

(b) Truck shall be loaded to the maximum permitted by the manufacturer. Power boost system, if supplied, shall be operating. Travel controls, including the transmission, shall be in neutral and all brake systems disengaged.

(c) Burnishing of brakes prior to test is optional. The following is a suggested procedure:

(1) load: 50% of truck rated capacity.

(2) initial road speed: maximum or 24 km/h, whichever is less.

(3) final road speed: zero (stop).

(4) deceleration rate: maximum without sliding tires or lifting steer tires.

(5) alternate: forward stop then reverse stop.

(6) rest: 30 min after each 50 stops. This is to be used as a guide; if smoke is evident, the rest time may be increased and the number of stops between rests decreased.

7.16.5 Test Methods

(a) Drawbar Drag Method

(1) Measure drawbar drag in both forward and reverse direction while pulling at no more than 1.6 km/h in both directions.

(2) The drawbar shall be horizontal and attached at the standard coupler height but not more than 900 mm above the road surface.

(3) The service brake system shall enable the truck to develop a drawbar drag at least equal to a percent of the loaded truck weight as follows (see Fig. 2):

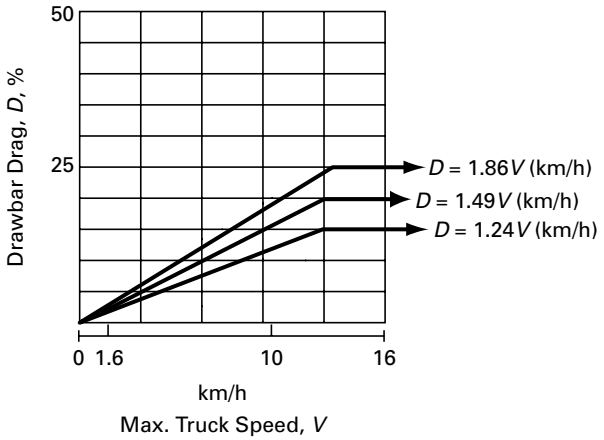

Fig. 2 Service Brake Performance Requirements

(a) for low lift and high lift trucks, except high lift order picker trucks

(1) capacities of 16 000 kg and less

$$D = 1.86V \text{ (km/h)}$$

but not required to exceed 25%.

(2) capacities greater than 16 000 kg, up to and including 50 000 kg

$$D = 1.49V \text{ (km/h)}$$

but not required to exceed 20%.

(b) for high lift order picker trucks

$$D = 1.24V \text{ (km/h)}$$

but not required to exceed 15%.

D = drawbar drag, as determined from Fig. 2, as a percent (e.g., 25 for 25%)

V = travel speed of the loaded truck, km/h

(b) Stopping Distance Method. Determine that the brakes will stop the loaded truck within the required distance, measured from the point of brake application, calculated from the following formulas:

$$s = \frac{0.394v^2}{D}$$

where

D = drawbar drag, as determined from Fig. 2, as a percent (e.g., 25 for 25%)

s = approximate theoretical stopping distance, m

v = speed, km/h

7.16.6 Strength

(a) For trucks having a downward movement of brake pedal to apply the service brake(s), the system shall be

Copyright ASME International
Provided by IHS under license with ASME
No reproduction or networking permitted without license from IHS
Not for Resale

capable of withstanding a brake pedal force of 1 335 N without failure of any component.

(b) For trucks having an upward movement of the brake pedal to apply the service brake(s), a force of 200% of the maximum possible setting of the spring shall not cause failure of any component.

(c) For trucks having hand grip (squeeze) operated brake(s), the system shall be capable of withstanding a force of 715 N at the midpoint of the brake handle.

7.17 Parking Brake System Performance for Trucks Up to and Including 50 000 kg Capacity

7.17.1 A parking brake (or mechanism) that may be a part of, or include the service brake shall be provided and be capable of holding the truck on the maximum grade that the truck can climb with rated capacity load, or on the following grade, whichever is the lesser:

(a) order picker, high lift: 5%

(b) order picker, low lift: 10%

(c) motorized hand and hand/rider: 10%

(d) sit-down rider, electric or combustion powered: 15%

(e) stand-up rider, electric or combustion powered: 15%

7.17.2 The parking brake system shall be capable of maintaining the specified performance requirement despite any contraction of the brake parts, exhaustion of the source of energy, or leakage of any kind.

7.17.3 The parking brake system shall be manually operable by hand or foot from the normal operating position or automatically applied by leaving the normal operating position. Trucks with only nonautomatically applied brakes shall have a warning to the operator to apply brakes before leaving truck.

7.17.4 Brakes may be burnished prior to test.

7.18 Travel Direction Control(s) Marking

Forward and reverse direction control(s) shall be clearly and durably identified on the control or in close proximity.

7.19 Travel Controls: Electric Trucks, Sit-Down Rider

7.19.1 Means shall be provided so that the travel circuit can be activated only by resetting the speed and directional control(s) when the operator assumes the operating position. A positive neutral position or control shall be provided.

(a) Directional Control — Hand Operated

(1) Motion of control away from the operator shall move the truck with load end leading.[3]

(2) Motion of control toward the operator shall move the truck with load end trailing.[3]

(b) Travel Speed Selector. Travel speed selector shall be conveniently located. The speed selection pattern shall be durably and clearly identified.

(c) Combination — Travel Speed and Direction Controls With One Pedal or Two Pedals Side by Side

(1) Forward or downward motion on left or forward portion shall move truck with load end leading.[3]

(2) Forward or downward motion on right or rear portion shall move truck with load end trailing.[3]

(3) Forward and/or downward motion of either portion shall increase speed.

(4) Pedals for side-seated operators shall be directional.[4]

(d) Combination — Travel Speed and Direction Controls With Two Pedals, Separated by the Service Brake Pedal

(1) Right pedal shall move truck with load end leading.[3]

(2) Left pedal shall move truck with load end trailing.[3]

(3) Depressing either pedal shall increase speed.

(4) Pedals for side-seated operators shall be directional.[4]

7.19.2 Means shall be provided to disconnect the travel circuit automatically when the operator leaves the operating position.

7.19.3 A manually operated switch (may be key type) to disconnect all control circuits shall be provided.

7.19.4 Service brakes shall be operable with the right foot and be depressed to apply.

7.19.5 Motor speed control shall be either right-hand or right-foot operated. If control is hand operated, motion shall be forward or up to increase speed. If control is foot operated, depress to increase speed.

7.19.6 If a single pedal controls both acceleration and braking, downward motion of the pedal shall increase speed, releasing the pedal shall apply brakes, and the pedal shall be located for right-foot operation.

7.19.7 Means readily accessible to the operator in the normal operating position shall be provided to shut off all power to the truck.

7.20 Travel Controls: Electric Trucks, Stand-Up Rider

7.20.1 Means shall be provided so that the travel circuit can be activated only by resetting the speed and/or directional control(s) when the operator assumes the operating position.

[3] On trucks with "turn-around operator stations," the controls for the normal operator position (facing load end) shall conform to this Standard. For hand-operated directional controls, motion of the control shall be in the same direction as truck travel.

[4] For side-seated operators, the pedal or portion of the pedal toward the load end of the truck shall move truck with load end leading and the pedal portion or portion of the pedal away from the load end shall move truck with load end trailing.

Copyright ASME International
Provided by IHS under license with ASME
No reproduction or networking permitted without license from IHS Not for Resale

7.20.2 Means shall be provided to disconnect the travel circuit automatically when the operator leaves the operating position.

7.20.3 A manually operated switch (may be key type) to disconnect all control circuits shall be provided.

7.20.4 Service brakes may be actuated by either an upward or downward motion.

7.20.5 Means readily accessible to the operator in the normal operating position shall be provided to shut off all power to the truck.

(04) **7.20.6** Powered travel movement of the truck shall be possible only if the operator is in the normal operating position.

(04) **7.20.7** Powered travel movement shall not occur automatically when the operator returns to the normal operating position without additional operation(s) (e.g., resetting the direction control, reactivating speed control, etc.).

7.21 Travel Controls: Internal Combustion-Powered Industrial Trucks, Sit-Down Rider

7.21.1 Travel controls shall be so arranged that power will be applied to the wheels only when the transmission or direction control has been actuated. A positive neutral position or control shall be provided.

(a) Directional Control — Hand Operated

(1) Motion of control away from the operator shall move truck with load end leading.[3]

(2) Motion of control toward operator shall move truck with load end trailing.[3]

EXCEPTION: An acceptable alternative is a properly labeled "H" pattern.

(b) Travel Speed Selector. Travel speed selector shall be conveniently located. The speed selection pattern shall be durably and clearly identified.

(c) Combination — Travel Speed and Direction Controls With One Pedal or Two Pedals Side by Side

(1) Forward or downward motion on left or forward position shall move truck with load end leading.[3]

(2) Forward or downward motion on right or rear portion shall move truck with load end trailing.[3]

(3) Forward and/or downward motion of either portion shall increase speed.

(4) Pedals for side-seated operators shall be directional.[4]

(d) Combination — Travel Speed and Direction Controls With Two Pedals, Separated by the Service Brake Pedal

(1) Right pedal shall move truck with load end leading.[3]

(2) Left pedal shall move truck with load end trailing.[3]

(3) Depressing either pedal shall increase speed.

(4) Pedals for side-seated operators shall be directional.[4]

7.21.2 Engine speed should be no greater than low idle unless the acceleration control has been intentionally actuated.

7.21.3 A manually operated engine shut-off device (may be key type) shall be provided.

7.21.4 Service brake shall be operable with the right foot and be depressed to apply.

7.21.5 Clutch pedal, if used, shall disengage the clutch by downward motion, and shall be located for left-foot operation.

7.21.6 If a combination clutch and service brake pedal is used, the initial downward movement shall disengage the clutch and the final downward movement shall apply the service brakes. The pedal shall be located for left-foot operation.

7.21.7 Engine speed control shall be either right-hand or right-foot operated. If control is hand operated, motion shall be forward or up to increase speed. If control is foot operated, depress to increase speed.

7.21.8 If a combination pedal controls both acceleration and service brakes, downward motion of the brake portion shall apply the service brakes. The combination pedal shall be located for right-foot operation.

7.21.9 The normal engine starting system shall not be operable if the operation will produce rotation of the drive wheels.

7.21.10 Powered travel movement of the truck shall be possible only if the operator is in the normal operating position. (04)

7.21.11 Powered travel movement shall not occur automatically when the operator returns to the normal operating position without additional operation(s) (e.g., resetting the directional control, reactivating speed control, etc.). (04)

7.22 Travel Controls: Internal Combustion-Powered Industrial Trucks, Stand-Up Rider

7.22.1 Travel controls shall be so arranged that power will be applied to the wheels only when the transmission or direction control has been actuated.

7.22.2 Accelerator, if foot operated, shall increase speed by downward motion of a pedal located for right-foot operation.

7.22.3 A manually operated engine shutoff device (may be key type) shall be provided.

7.22.4 Service brakes may be actuated by either an upward or downward motion.

Copyright ASME International
Provided by IHS under license with ASME
No reproduction or networking permitted without license from IHS
Not for Resale

7.22.5 The normal engine starting system shall not be operable if the operation will produce rotation of the drive wheels.

7.23 Travel Controls: Electric Motorized Hand, Hand/Rider, and Low Lift Order Picker Trucks

7.23.1 The travel circuit shall automatically return to a neutral position when released by the operator, or the travel circuit shall be interrupted when released by the operator and can be reactivated only by resetting the speed and direction control(s) when the operator assumes the operating position.

7.23.2 Forward and reverse motion of the truck shall be controlled or selected by means of a control device readily accessible when grasping the handle grip on the steering tongue. This control device shall operate directionally in one of the following manners:

(a) the control shall have a forward motion for forward travel and a rearward motion for reverse travel;

(b) the control shall consist of two buttons located at the top of the control handle when the steering tongue is approximately vertical, arranged so that the forward one is for forward travel and the rearward one is for reverse travel;

(c) the control shall have rotary motion, the rotation being in the same direction as the drive wheel rotation.

7.23.3 The control system shall provide the capability for the truck to travel at, or less than, walking speed (approximately 5.6 km/h).

7.23.4 Travel control for high-speed operation shall be designed to avoid inadvertent operation by the walking operator.

7.23.5 The brake shall be applied, and current to the drive motor shall be cut off, whenever the steering tongue is in approximately a vertical position, and the same conditions shall exist whenever the steering tongue is in approximately a horizontal position, or the brake shall be applied, and current to the drive motor cut off, by release of the device normally used to control travel motion of the truck.

EXCEPTION: Low lift order picker trucks may be provided with a coasting system which cuts off current to the drive motor but does not apply the brake when the travel control device is released. Means to apply the brake, and activate the vehicle's warning device shall be readily operable while walking alongside of truck. Speed with this system shall not exceed normal walking speed (approximately 5.6 km/h) whenever the coasting system is activated. Additionally, a label or symbol shall be affixed to the truck, indicating the truck is equipped with a coasting system.

7.23.6 On trucks equipped with a steering tongue which can be moved up or down for brake application, means shall be provided to

(a) reverse automatically the truck's travel direction if the steering tongue is in the operating range and its control end contacts the walking operator

(b) apply the brake in the steering tongue operating range when the control is released and allowed to return to the neutral position

7.23.7 Means readily accessible to the operator shall be provided to shut off all power to the truck.

7.24 Controls: High Lift Operator-Up Trucks

7.24.1 To minimize free-fall of the platform supporting the operator, automatic means shall be provided to prevent lowering of the elevating mechanism should the lift chains become slack. Such means shall

(a) not interfere with the normal operation unless actuated

(b) stop downward motion of the elevating mechanism supporting the operator platform

(c) permit the load lifting device/operator station to be raised to free the hang up

7.24.2 Travel control(s) shall be so arranged that the truck will not move unless controls have been actuated for both direction and speed.

7.24.3 Automatic means shall be provided to restrict the travel speed in accordance with good operating practices when the operator platform is occupied and elevated above 600 mm.

7.24.4 Means shall be provided to disconnect the travel circuit automatically when the operator leaves the operating position.

7.24.5 A manually operated switch (may be key type) to disconnect all control circuits shall be provided.

7.24.6 When more than one set of control stations exists, means shall be provided to render inoperative all operating controls other than those on the elevating platform when the controls on the elevating platform have been selected for use. Only one location of controls shall be capable of being operated at one time.

7.24.7 Means readily accessible to the operator in the normal operating position shall be provided to shut off all power to the truck.

7.25 Load-Handling Controls

7.25.1 Load-Handling Controls

(a) should preferably be located for right-hand operation

(b) shall be self-centering

(c) shall be clearly and durably identified on the control or in close proximity to indicate function(s) and direction of motion of load or equipment

7.25.2 A single lever may be used to perform more than one function.

7.25.3 The upper surface of a rotary control device should move in the same sense of direction as a lever.

Copyright ASME International
Provided by IHS under license with ASME
No reproduction or networking permitted without license from IHS Not for Resale

Table 14 Lever- or Handle-Type Controls: Sequence of Location and Direction of Motion

Function	Direction of Motion	
Listed in Sequence of Location	Of Load or Equipment	Predominant Motion of the Operator's Hand When Actuating the Control Handle While Facing the Load [Note (1)]
Hoist	Up Down	Rearward or up Forward or down
Reach	Retract Extend	Rearward [Note (2)] Forward
Tilt	Rearward Forward	Rearward or up [Note (2)] Forward or down
Side shift	Right Left	Rearward or up Forward or down
Push-pull	Rearward Forward	Rearward [Note (2)] Forward
Rotate laterally	Clockwise Counterclockwise	Rearward or up Forward or down
Rotate longitudinally	Rearward Forward	Rearward or up Forward or down
Load stabilizer	Down Up	Rearward or up Forward or down
Swing	Right Left	Rearward or up Forward or down
Slope	Clockwise Counterclockwise	Rearward or up Forward or down
Fork position	Together Apart	Rearward or up Forward or down
Trip	Engage Release	Rearward or up Forward or down
Grip	Engage Release	Rearward or up Forward or down
Truck stabilizer	Raise Lower	Rearward or up Forward or down
Clamp	Clamp Release	Rearward or up Forward or down

NOTES:
(1) EXCEPTION: For high lift order picker trucks and center control pallet trucks, predominant motion of operator's hand when actuating the control handle while facing away from the load.
(2) The sense of rotation of the control handle is intended to be in the same direction as the desired motion of the mast or load.

7.25.4 Special controls (such as for preselective or automatic devices) should preferably be identified and preferably be in accordance with the above recommendations.

7.25.5 For load-handling symbols, see ASME 3287.

7.25.6 Lever-or handle-type controls (including toggle switches) should preferably be arranged in sequence of location and direction of motion according to Table 14.

7.25.7 Where the operation of lifting, lowering, tilting, and/or auxiliary device is controlled by a pair of push buttons, they shall operate in the same sense as described in para. 7.25.6. For example, actuation of the button that is located to the rear (relative to the operator's position) should serve the same function as motion of a control lever to the rear.

7.25.8 Vertical masts shall be provided with a means to prevent the load from lowering at a rate in excess of 0.6 m/s in case of a failure in the load supporting hydraulic control circuits.

7.26 Tilt Mechanism

Tilting mechanism for high lift trucks, if provided, shall be capable of smooth, controlled operation.

Copyright ASME International
Provided by IHS under license with ASME
No reproduction or networking permitted without license from IHS Not for Resale

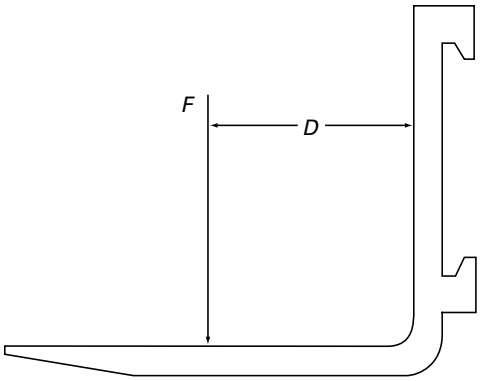

Fig. 3 Typical Fork

7.27 Forks

7.27.1 Forks shall be designed to avoid unintentional unhooking and/or excessive lateral movement.

7.27.2 Each fork shall be clearly stamped with its individual load rating in an area readily visible and not subject to wear; e.g., 2 000 × 600, meaning 2 000 kg load rating at 600 mm load center.

7.27.3 Fork strength shall permit the following loading and method of test.

(a) The test load *F* shall correspond to three times the load rating of the fork arm and shall be applied to it at the applicable distance *D* from the front face of the fork arm shank (see Fig. 3).

(b) The fork arm shall be restrained in a manner identical to that used on the forklift truck.

(c) The test load shall be applied twice, gradually and without shock, and maintained for 30 sec each time.

(d) The fork arm shall be checked before and after the second application of the test load. It shall not show any permanent deformation.

7.27.4 These tests are intended to be applied to prototype forks but may also be applied to production forks on a selective basis as required by the user or manufacturer.

7.28 Load Backrest Extension

7.28.1 The load backrest extension, if provided, should have height, width, and size of openings sufficient to minimize the possibility of the load falling toward the mast when the mast is in a position of maximum rearward tilt.

7.28.2 The load backrest extension, if provided, shall be constructed in a manner that does not interfere with good visibility, and size of openings should not exceed 150 mm in one of the two dimensions.

Table 15 Overhead Guard Impact Test Loads

Truck Rated Capacity at a 600 mm Load Center	Impact Test Energy, J [Note (1)]	Minimum Weight of Test Load, kg
1 360 kg and under	5 400	340
1 361 kg to 2 270 kg	10 800	680
2 271 kg to 3 630 kg	21 760	1 360
3 631 kg to 6 350 kg	32 640	1 360
6 351 kg to 11 300 kg	43 520	1 360
11 301 kg and over	48 960	1 360

NOTE:
(1) Drop distance in m $= \dfrac{\text{energy in joules}}{9.8 \times \text{actual weight of test load in kg}}$

7.29 Overhead Guard for High Lift Rider Powered Industrial Trucks

7.29.1 Design Requirements

(a) The overhead guard and its mounting shall be capable of withstanding the impact of a 45 kg hardwood covered cube (or equivalent) under the conditions specified in para. 7.29.2(b).

(b) The overhead guard and its mounting shall be capable of withstanding an impact test as specified in Table 15. Details of conducting the test and measuring the deformation are covered in para. 7.29.2(c).

(c) Openings in the top of the overhead guard shall not exceed 150 mm in one of the two dimensions, width or length.

(d) The overhead guard shall extend over the operator under all normal operating circumstances of truck operation except as provided for below. For overhead guards fixed to the mast, this also applies to all positions of the mast. The overhead guard shall not extend beyond the plan view outline of the truck.

The control levers in their neutral position, unprotected pedals, and the steering wheel may extend in the direction of the mast outside of the plan view of the overhead guard up to a distance of 150 mm. Control levers may extend to either side of the truck outside the plan view of the overhead guard, up to a maximum of 150 mm providing they do not extend outside the plan view of the truck at any point of their range of operation. Such coverage is not required of the parking brake control.

Feet and legs extending beyond the overhead guard will be considered protected if under cover of a cowl. Any portion of them without such cover shall be limited to a maximum exposure of 150 mm measured in the plan view.

(e) For sit-down rider trucks a vertical clearance of at least 890 mm should be maintained from the Seat Index Point or H-Point of the truck, as determined according to ISO 5353, to the underside of the section of the guard under which the operator's head is located in his normal position during truck operation.

Copyright ASME International
Provided by IHS under license with ASME
No reproduction or networking permitted without license from IHS
Not for Resale

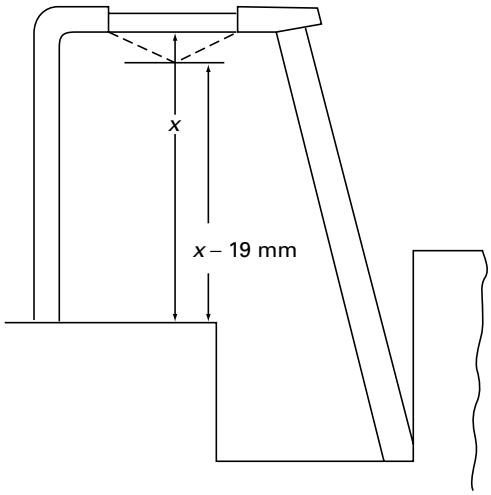

Fig. 4 Overhead Guard Cube Drop Test Deformation Limit

(f) For stand-up trucks, a vertical clearance of at least 1 880 mm should be maintained from the platform where the operator stands to the underside of the section of the guard under which the operator's head is located in his normal position during truck operation.

(g) High lift motorized hand trucks do not require overhead guards.

(h) When requested by the user, the manufacturers may reduce the normal overhead guard height and the vertical clearance for the operator's head under the guard to permit truck operation by the user with a guard in areas where overhead obstructions limit the overall lowered height of the truck.

7.29.2 Test Procedures

(a) General

(1) Tests shall be conducted with the overhead guard in place on a truck for which it is designed, or a simulated mounting may be used.

(2) If the 45 kg hardwood covered cube (or equivalent) drop test is conducted first, the same overhead guard and mounting can be used to conduct the impact drop test.

(b) Cube Drop Test — 45 kg

(1) The 45 kg test cube shall be covered with hardwood (or equivalent) and measure approximately 300 mm on a side.

(2) The test cube shall be dropped in free-fall vertically at random on the overhead guard and the center of the cube shall strike within a 600 mm diameter circle centered above the operator's seat or operator's standing position.

(3) The test cube shall be positioned to drop in free-fall with a flat surface approximately parallel to the top of the overhead guard, and not strike on a corner or edge of the cube.

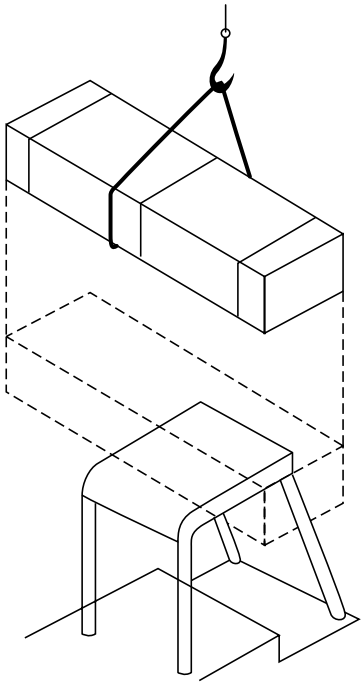

Fig. 5 Overhead Guard Impact Test Method

(4) The test cube shall be dropped as described, a distance of 1 525 mm ten times, without fracture (no parts separation; however, evidence of minor cracks is permissible) and without permanent deformation exceeding 19 mm based on the original head clearance provided by the guard (see Fig. 4).

(c) Impact Drop Test

(1) The test load shall be composed of construction grade two-by-four lumber, approximately 40 mm × 90 mm in cross section and 3 600 mm to 3 700 mm long and not to exceed 1 000 mm in width. Individual pieces should be placed with the 90 mm dimension flat. The lumber shall be bound together with at least three metal bands, one approximately in the center, and the others not further than 900 mm from each end (see Fig. 5). A test load of different dimensions and/or materials may be used, provided it results in a test not less severe than that described.

(2) The test load shall be dropped in free-fall from an approximate horizontal position and from a height to develop the required impact in joules specified in Table 15.

(3) The test load shall be centered above the overhead guard with the 3 600 mm to 3 700 mm length at right angles to the longitudinal centerline of the truck, the 1 000 mm dimension flat and shall strike the guard in this position (see Fig. 5).

(4) For sit-down rider trucks, the permanent deformation of the overhead guard and its mounting after impact shall be measured between a horizontal plane

Copyright ASME International
Provided by IHS under license with ASME
No reproduction or networking permitted without license from IHS
Not for Resale

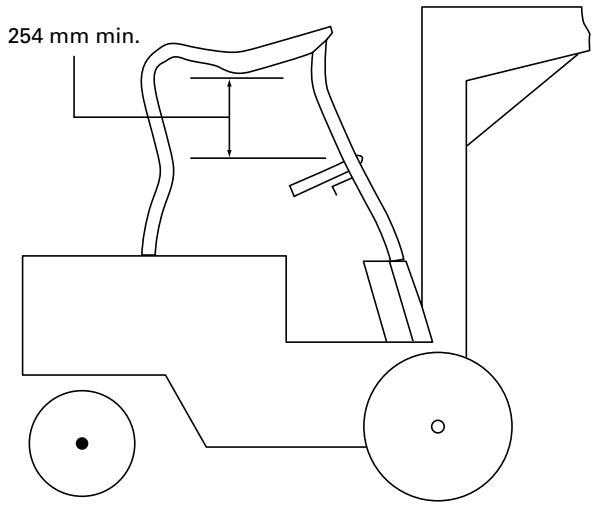

Fig. 6 Overhead Guard Impact Deformation Limit (Sit-Down)

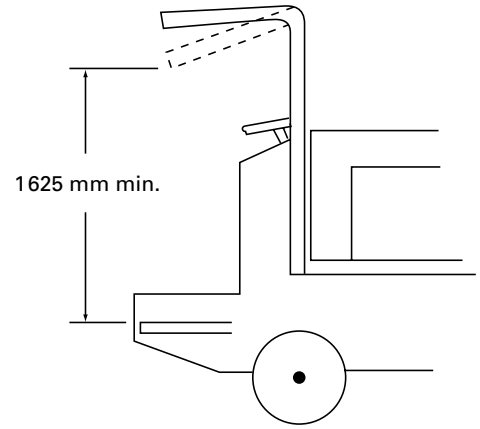

Fig. 7 Overhead Guard Impact Deformation Limit (Stand-Up)

tangent to the underside of the guard at the operator's position and a horizontal plane tangent to the upper surface of the steering wheel. There shall be not less than 254 mm between the planes (see Fig. 6).

(5) For stand-up rider trucks, the permanent deformation of the overhead guard and its mounting after impact shall leave a distance of not less than 1 625 mm between the surface on which the operator stands during truck operation and a horizontal plane tangent to the underside of the overhead guard (see Fig. 7).

7.30 Operator Protection for Stand-Up, End Controlled, Narrow Aisle and Counterbalanced Trucks

7.30.1 Guards or other means may be provided as part of the truck to limit intrusions into the operator's area of horizontal members (e.g., rack beams), oriented generally transverse to the direction of travel.

7.30.1.1 The means and its mounting shall be strong enough to withstand the impact of a load simulating the collision between a truck carrying a full rated load and traveling at 1.6 km/h and a horizontal rigid barrier simulating a rack beam with a 75 mm vertical dimension.

7.30.1.2 The direction and point of impact should be selected to produce the greatest intrusion into the operator's area.

7.30.1.3 After impact, there shall be no separation of parts or permanent deflection in excess of 100 mm in the horizontal plane.

7.30.2 These means are intended to offer protection to the operator from horizontal members substantially crosswise to the direction of travel, but cannot protect against intrusion by all possible objects, particularly those of small cross-section (e.g., rods or pipes) lying parallel with the travel direction.

7.30.3 Operator protection means shall be designed so as not to interfere with the normal operation of the controls, to allow getting on and off the truck easily, and to permit rapid exit in an emergency.

7.31 Guards for Wheels

Guards or other means shall be provided to protect the operator, in the normal operating position, from particles thrown by the tires or wheels.

7.32 Guards for Moving Parts

The operator, in the normal operating position, shall be protected from moving parts that represent a hazard.

7.33 Overtravel Limits

Provision shall be made to prevent travel of mechanical systems such as hoists, tilt, etc., beyond that intended by design.

7.34 Warning Device

7.34.1 Every truck shall be equipped with an operator controlled horn, whistle, gong, or other sound-producing device(s).

7.34.2 In addition, other devices (visible or audible) suitable for the intended area of use may be installed when requested by the user.

7.35 Pedal and Platform Surfaces

Control pedals and control platforms stood on, or engaged, by the operator's feet shall have slip resistant surfaces.

7.36 Operator Platforms: Nonelevating

End control, reach, narrow aisle, single side loader, and motorized hand/rider trucks shall be equipped with

--`,,```,,,,````-`-`,,`,,`,`,,`---

Copyright ASME International
Provided by IHS under license with ASME
No reproduction or networking permitted without license from IHS
Not for Resale

the platform extending beyond the operator's position, strong enough to withstand a compression load equal to 2.5 times the weight of the loaded truck applied along the longitudinal axis of the truck with the outermost projection of the platform against a flat vertical surface. The operator's area shall be constructed to provide space for the operator's lower extremities, including the operation of foot-operated controls, within the plan view outline of the truck when being operated as recommended by the manufacturer.

(a) End Control Trucks

(1) Operator enclosures may be provided in conjunction with the platform. If provided, they shall permit easy ingress and egress from the platform.

(2) On double end control baggage-type trucks or trucks that may be transported on short elevators, means shall be provided to prevent unintentional folding of the operator's folding platform.

(b) Reach, Narrow Aisle, and Single Side Loader Trucks. Operator enclosures may be provided in conjunction with the platform. If provided, they shall permit easy ingress and egress from the platform.

(c) Motorized Hand/Rider Trucks. Operator enclosures in conjunction with the platform are not recommended because of interference with the steering handle, and with rapid and unobstructed egress for the operator.

(d) Under certain operating conditions, either more or less guarding may be required for safe operation. These operating conditions, as identified by the user, shall be addressed in cooperation with the manufacturer.

7.37 Platforms: Elevating

7.37.1 Platforms used for elevating personnel shall have

(a) a slip resistant floor surface.

(b) a minimum floor space of 450 mm × 450 mm for each platform occupant.

(c) protection for personnel in their normal working position on the platform from moving parts of the truck that represent a hazard.

(d) restraining means such as a guard rail or a means for securing personnel such as a body belt or lanyard, whenever the platform can be elevated to a height greater than 1 200 mm.

(1) A guard rail shall have a height above the platform floor of not less than 915 mm or more than 1 065 mm around its upper periphery and include a midrail. To provide an access opening, the guard rail may be hinged or removable, or chains may be used if proper positioning is easily accomplished and a secured condition is discernible. Guard rails and access opening guards shall be capable of withstanding a concentrated horizontal force of 890 N applied at the point of least resistance without permanent deformation.

(2) Means for securing an operator are as follows:

(a) Lanyards shall be nylon rope (or equivalent stretch material). The length shall be such that the operator(s) has freedom of movement in his working area but shall be limited to a maximum free-fall of 1 525 mm measured from the point of attachment to the operator.

(b) Lanyards shall be so arranged as not to cause a condition where the operator(s) could trip on the lanyard.

(c) Lanyards shall be attached to an overhead member of the platform at a point located above and near the center of the platform.

(d) Deceleration devices shall incorporate an integral lanyard or lifeline that automatically limits free-fall.

(e) Body belts shall have a width of at least 44 mm.

(f) Testing

(1) Body Belts and Lanyards. The complete means for securing an operator shall be capable of withstanding three consecutive drop tests of 113 kg falling a distance of 1 825 mm without allowing the test weight to fall free to the ground. In testing, the waistband of the belt shall support the test weight in the same manner as it would support the worker.

(2) Deceleration Devices. When testing deceleration devices, the 136 kg load is supported directly below the deceleration device. The support is removed and the falling load shall come to a complete stop in no more than 1 220 mm.

(3) When a supplementary platform is utilized, it shall be provided with rails or other restraining means. The work area may be provided with a body belt and lanyard in lieu of, or in addition to, rails.

(4) When the supplementary platform is not utilized, a restraining means such as railings, chains, cable, or body belt(s) and lanyard(s) shall be provided on the open (load) side of the operator's platform.

(e) when controls are supplied for use on the elevating platform, they shall be readily accessible to the operator and protected from damage and inadvertent actuation. Provision to shut off power to the truck shall be provided. An emergency lowering means operable from the ground shall be provided for overriding the controls on the platform.

(f) hydraulic or pneumatic hoisting systems shall include means to prevent unintended descent in excess of 0.6 m/s in event of a hose failure.

(g) a structural safety factor of not less than 3 to 1 based on the minimum yield strength of the materials used for all load supporting structural elements and platform attachment means.

7.37.2 Operator platforms for operator-up, high lift trucks shall comply with para. 7.37.1 and shall have

(a) sufficient strength to withstand a compression load equal to 2.5 times the weight of the loaded truck applied along the longitudinal axis of the truck with

Copyright ASME International
Provided by IHS under license with ASME
No reproduction or networking permitted without license from IHS
Not for Resale

the outermost projection of the platform against a flat vertical surface

(b) an overhead guard manufactured in accordance with para. 7.29

7.37.3 Work platforms (does not include operator platforms) shall comply with para. 7.37.1 and shall have

(a) a 100 mm minimum height toe plate and restraining means per para. 7.37.1(d)(1).

(b) the floor of the platform located not more than 200 mm above the upper face of the supporting truck fork blade.

(c) means to securely attach the platform to the lifting carriage or forks, and to prevent the lifting carriage or forks from pivoting upward.

(d) means to correctly locate the platform centered laterally on the truck.

(e) floor dimensions that neither exceed two times the load center distance listed on the truck nameplate, measured parallel to the longitudinal center plane of the truck, nor have a width greater than the overall width of the truck (measured across the load bearing tires) plus 250 mm on either side.

(f) when controls for lift and lower are provided, means to render inoperative all operating controls other than those on the work platform when the controls on the elevating platform have been selected for use. Only one location of controls shall be capable of being operated at one time [with the exception of lowering means noted in para. 7.37.1(e)].

(g) an overhead guard manufactured in accordance with para. 7.29, when requested by the user.

(h) the combined weight of the platform, load, and personnel not to exceed one-half of the capacity as indicated on the nameplate of the truck on which the platform is used.

(i) the following information prominently indicated on the platform:

(1) maximum load including personnel and equipment

(2) weight of empty platform

(3) minimum capacity of truck on which the platform can be used

7.37.4 Trucks used for elevating personnel shall have

(a) When controls are supplied for use on the elevating platform, they shall be readily accessible to the operator and protected from damage and inadvertent actuation. Provision to shut off power to the truck shall be provided. An emergency lowering means operable from the ground shall be provided for overriding the controls on the platform.

(b) Hydraulic or pneumatic hoisting systems shall include means to prevent unintended descent in excess of 0.6 m/s in event of a hose failure.

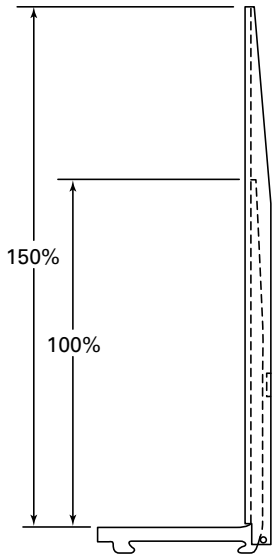

Fig. 8 Fork Extension

7.38 Radiator Caps

All pressurized, liquid-cooled, internal combustion engine-powered trucks shall have safety-type radiator caps such that a pressure relief step precedes the complete removal step.

7.39 Fork Extensions

7.39.1 Fork extensions should not be longer than 150% of the supporting fork's length (see Fig. 8).

7.39.2 Each fork extension shall be capable of supporting a uniformly distributed, or equivalent load of three times its rated capacity when mounted on a fork of the specified size.

No permanent deformation shall be produced by the application of this test load after having removed the effects of any local manufacturing irregularities by up to three preliminary applications of the test load.

7.39.3 For purpose of rating, the rated load center of the fork extension should be at 50% of the fork extension load supporting length.

7.39.4 Each fork extension shall be clearly stamped with its individual load rating and supporting fork size in an area readily visible and not subject to wear. For example, 2 000 × 600 – 80 × 180 × 800 means a 2 000 kg load at a 600 mm load center with a recommended supporting fork size of 80 mm × 180 mm and not less than 800 mm long.

7.39.5 Fork extensions shall be designed to avoid unintentional disengagement from the forks. Lateral clearance shall not exceed 12 mm between fork and extension.

Copyright ASME International
Provided by IHS under license with ASME
No reproduction or networking permitted without license from IHS Not for Resale

7.40 Battery Restraint for High Lift Rider Electric Trucks Up to and Including 5 500 kg Rated Capacity (Excluding High Lift Man-Up Trucks and High Lift Order Picker Trucks)

7.40.1 Means shall be provided, as part of the truck, to restrain the battery in a vertical and longitudinal direction so that if truck tipping should occur, the battery will not move more than 100 mm into the space normally occupied by the operator or move more than 100 mm in a lateral direction beyond the plan view outline of the truck.

7.40.2 The restraining means shall restrict the battery displacement within the required limits when up to a maximum 90 deg overturn is simulated by allowing a static truck to fall free from its critical balance point impacting on a horizontal plane. The movement of the battery shall not interfere with the operator's egress from the truck.

(04) 7.41 Operator Restraint Systems

Counterbalanced, center control, high lift trucks that have a sit-down, nonelevating operator position shall have a restraint device, system, or enclosure that is intended to assist the operator in reducing the risk of entrapment of the operator's head and/or torso between the truck and ground in the event of a tip-over. Such means shall not unduly restrict the operation of the truck, e.g., the operator's mounting, dismounting, movement, and/or visibility.

Warnings and instructions on the purpose and use of the operator protection provided shall be displayed in clear view on the truck and included in the operator's manual.

NOTE: Stand-ups, rear entry end control, narrow aisle, and reach trucks shall be designed with open operator compartments to permit easy ingress and egress. This allows the operator, where possible, a free and easy egress from the truck in the event of an imminent tipover or off-the-dock accident.

7.42 Visibility

The visibility of internal combustion engine powered and electric high lift, counterbalanced, sit-down rider industrial trucks with capacities up to and including 10 000 kg shall meet the acceptable visibility criteria of ASME B56.11.6.

EXCEPTION: When the design requirements for a specific truck application preclude meeting the visibility criteria of ASME B56.11.6, the manufacturer and user, in consultation with each other, shall determine the ancillary devices or alternate operating procedures that are necessary to assist the operator or alert personnel in the vicinity; however, this volume is not an endorsement of any ancillary device. These may include, but are not limited to, the use of audible and visible alarms, visual aids, restriction of pedestrians from the operating area, or additional personnel to assist the operator.

7.43 Sound

Sound testing, when conducted, shall be in accordance with the test procedures of ASME B56.11.5.

Copyright ASME International
Provided by IHS under license with ASME
No reproduction or networking permitted without license from IHS
Not for Resale

Part IV
Glossary of Commonly Used Words and Phrases

(04)

approved: the classification or listing as to fire, explosion, and/or electric shock hazard by a nationally recognized testing laboratory, i.e., a laboratory qualified and equipped to conduct examinations and tests such as those prescribed by Underwriters Laboratories, Inc.

attachment: a device other than conventional forks or load backrest extension, mounted permanently or removably on the elevating mechanism of a truck for handling the load. Popular types are fork extensions, clamps, rotating devices, side shifters, load stabilizers, rams, and booms.

attachment, removable: an attachment that can be mounted on the forks, or in place of the forks on the carriage, by means of such conventional fasteners as bolts, pins, etc., and that does not require the disassembly of any other portion of the lifting system to install or remove.

authorized personnel: persons designated by the user to operate or maintain the equipment.

battery-electric truck: see *truck, battery-electric.*

belt, body: a simple or compound strap with means for securing it about the waist and for securing a lanyard to it.

body belt: see *belt, body.*

brake system, parking: a means to prevent inadvertent movement of a stationary truck.

brake system, service: the primary means of any type used for stopping and holding the truck.

bridge plate: a portable device for spanning the gap between two rail cars.

cantilever truck: see *truck, cantilever.*

capacity: the capacity of a truck equipped with load carriage and forks, or with attachments, is the weight at a specified load center that a given truck can transport in a carry position and stack to the specified elevation of the load-engaging means.

NOTE: Capacity is used to designate the weight handling ability of a particular truck as equipped.

carriage: a support structure for forks or attachments, generally roller mounted, traveling vertically within the mast of a cantilever truck.

center control: the operator control position located near the center of the truck.

center of gravity (of load): that point at which the load mass is concentrated. It is located horizontally by its distance from the vertical fork face and vertically by its distance above the load bearing surface of the forks, or equivalents for other load-engaging means. Except where otherwise indicated, this point is located in the vertical plane of the truck's longitudinal centerline.

counterbalanced front/side loader lift truck: see *truck.*

counterbalanced truck: see *truck, counterbalanced.*

deceleration device: any mechanism that serves to reduce the falling speed and provide a complete stop in falling without interference and manipulation of the device.

diesel-electric truck: see *truck, diesel-electric.*

dockboard: a portable or fixed device for spanning the gap or compensating for difference in level between loading platforms and carriers.

electric truck: see *truck, electric.*

enclosure, operator: fixed vertical structure(s) added to the operator platform, generally to the sides or to the rear of that platform.

end control: the operator control position located at the end opposite the load end of the truck.

fork extension: a lift truck attachment that is added to the truck fork to increase the fork's effective length for handling oversized uniformly distributed loads.

fork height: the vertical distance from the floor to the horizontal load-carrying surface of the forks, measured adjacent to the heel of the forks, and in the case of reach trucks, with the forks extended.

forklift truck: see *truck, forklift.*

forks: horizontal tine-like projections, normally suspended from the carriage, for engaging and supporting loads.

gas-electric truck: see *truck, gas-electric.*

high lift platform truck: see *truck, high lift platform.*

high lift truck: see *truck, high lift.*

industrial tow tractor: see *tow tractor, industrial.*

internal combustion-engine truck: see *truck, internal combustion-engine.*

lanyard: a rope suitable for supporting one person. One end is fastened to a body belt or harness and the other end is secured to a substantial object or a lifeline.

Copyright ASME International
Provided by IHS under license with ASME
No reproduction or networking permitted without license from IHS Not for Resale

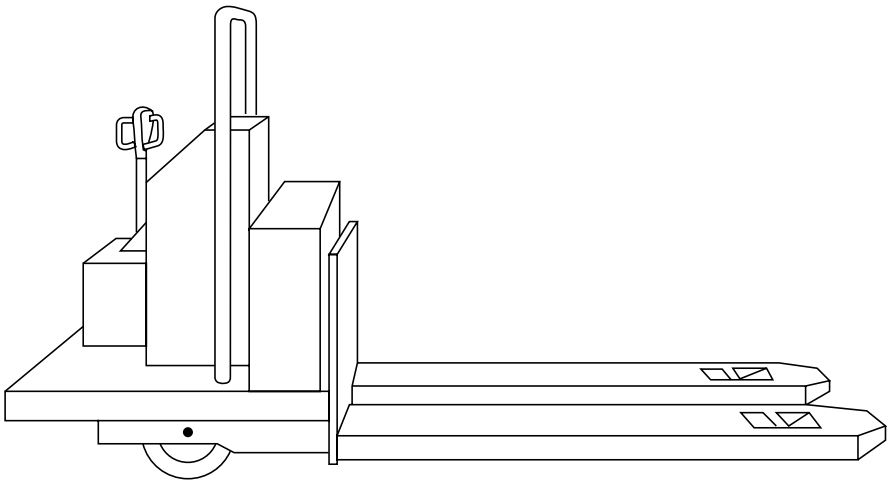

Fig. 9 Motorized Hand/Rider Truck

lifeline: a rope, suitable for supporting one person, to which a lanyard, deceleration device, or body belt (or harness) is attached.

lift truck: see *truck, forklift.*

load backrest: that portion of the carriage and forks serving to restrain the load when the load is tilted rearward or upward.

load backrest extension: a removable device that increases the load restraining area beyond that provided by the load backrest.

load center: the horizontal longitudinal distance from the intersection of the horizontal load carrying surfaces and vertical load-engaging faces of the forks (or equivalent load-positioning structure) to the center of gravity of the load.

low lift platform truck: see *truck, low lift platform.*

low lift truck: see *truck, low lift.*

maintenance platform: see *platform, work.*

manufacturer: individual(s) or organization(s) that develop(s) raw material(s) and (sub)assemblies into the end product(s).

mast: the support member providing the guideways permitting vertical movement of the carriage. It is usually constructed in the form of channels or similar sections providing the supporting pathway for the carriage rollers.

maximum fork height: the fork height attainable in fully raised position when loaded.

motorized hand/rider truck: see *truck, motorized hand/rider.* See Fig. 9.

motorized hand truck: see *truck, motorized hand.*

motorized walkie/rider truck: see *truck, motorized hand/rider.*

motorized walkie truck: see *truck, motorized hand.*

narrow aisle truck: see *truck, narrow aisle.*

normal operating position: that typical, correct, proper place, and body position from which a truck can be made to function safely when operated according to the truck manufacturer's recommendations.

operator: a trained and authorized person who controls any function(s) of a powered industrial truck.

operator enclosure: see *enclosure, operator.*

operator platform: see *platform, operator.*

order picker truck, high lift: see *truck, high lift order picker.*

order picker truck, low lift: see *truck, low lift order picker.*

overhead guard: a framework fitted to a truck over the head of a riding operator for the purpose of providing protection for the operator from falling objects.

pallet truck: see *truck, pallet.*

parking brake system: see *brake system, parking.*

platform, maintenance: see *platform, work.*

platform, operator: a platform or area from which a standing person controls the functions of a lift truck or other material-handling device.

platform, safety: see *platform, work.*

platform, supplementary: any platform which can be mounted on a high lift fork truck or other elevating device and does not require disassembly of any portion of the lifting system to install or remove, but not intended to elevate personnel.

platform, work: a platform intended to provide safe working conditions and designed to be mounted on a high lift fork truck or other elevating device, providing an area for person(s) elevated by and working from the platform safety work surface.

powered industrial truck: see *truck, powered industrial.*

Copyright ASME International
Provided by IHS under license with ASME
No reproduction or networking permitted without license from IHS Not for Resale

rated capacity: for a truck equipped with load carriage and forks or attachments it is the weight established by the manufacturer at a required load center that a given truck can transport and stack to a height established by the manufacturer.

NOTE: Rated capacity is used as a means for comparing the weight-handling ability of trucks.

reach truck: see *truck, reach.*

removable attachment: see *attachment, removable.*

rider truck: see *truck, rider.*

safety platform: see *platform, work.*

safety work surface: a surface intended to reduce the possibility of foot slippage.

service brake system: see *brake system, service.*

side loader: see *truck, side loader.*

straddle truck: see *truck, straddle.*

supplementary platform: see *platform, supplementary.*

tiering: the process of placing one load on or above another.

tow tractor, industrial: a powered industrial truck designed primarily to draw one or more nonpowered trucks, trailers, or other mobile loads.

transport vehicle: a cargo-carrying vehicle (e.g., truck, semitrailer, trailer, or railcar) that may be entered by a powered or nonpowered industrial truck to load or unload material.

truck: see *truck, powered industrial.*

truck, battery-electric: an electric truck in which the power source is a storage battery.

truck, cantilever: a self-loading counterbalanced or noncounterbalanced truck, equipped with cantilever load-engaging means such as forks.

truck, counterbalanced: a truck equipped with load-engaging means wherein all the load during normal transporting is external to the polygon formed by the wheel contacts.

truck, counterbalanced front/side loader lift: a self-loading high lift counterbalanced truck (equipped with a fixed or tiltable elevating mechanism) capable of transporting and tiering a load in both the counterbalanced forward position and any location up to and including 90 deg from the longitudinal centerline of the truck, while possessing the capability of transversing the load laterally. See Fig. 10.

truck, diesel-electric: an electric truck in which the power source is a diesel engine-driven generator.

truck, electric: a truck in which the principal energy is transmitted from power sources to motor(s) in the form of electricity.

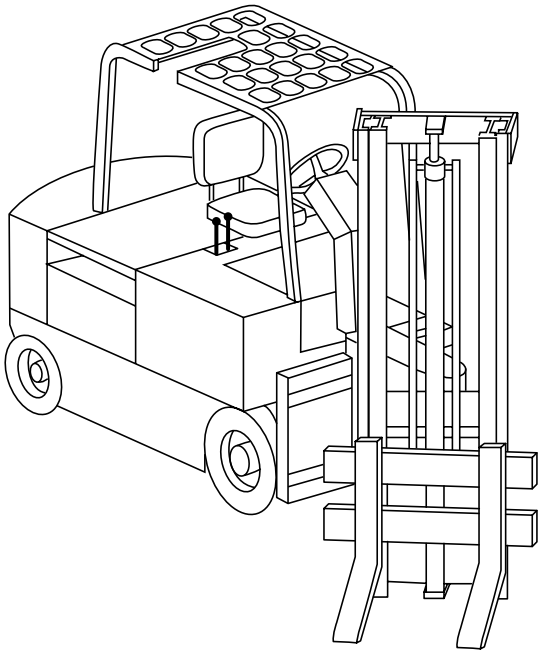

Fig. 10 Counterbalanced Front/Side Loader Lift Truck

truck, forklift: a self-loading truck, equipped with load carriage and forks for transporting and tiering loads.

truck, gas-electric: an electric truck in which the power source is a gasoline or LP gas engine-driven generator.

truck, high lift: a self-loading truck equipped with an elevating mechanism designed to permit tiering. Popular types are high lift fork truck, high lift ram truck, high lift boom truck, high lift clamp truck, and high lift platform truck. See Fig. 11.

truck, high lift order picker: a high lift truck controllable by the operator stationed on a platform movable with the load-engaging means and intended for (manual) stock selection. The truck may be capable of self-loading and/or tiering.

truck, high lift platform: a self-loading truck equipped with a load platform, intended primarily for transporting and tiering loaded skid platforms. See Fig. 12.

truck, internal combustion-engine: a truck in which the power source is a gasoline, LP gas, or diesel engine.

truck, lift: see *truck, forklift.*

truck, low lift: a self-loading truck equipped with an elevating mechanism designed to raise the load only sufficiently to permit horizontal movement. Popular types are low lift platform truck and pallet truck. See Fig. 13.

--`,,```,,,,````-`-`,,`,,`,`,,`---

Copyright ASME International
Provided by IHS under license with ASME
No reproduction or networking permitted without license from IHS Not for Resale

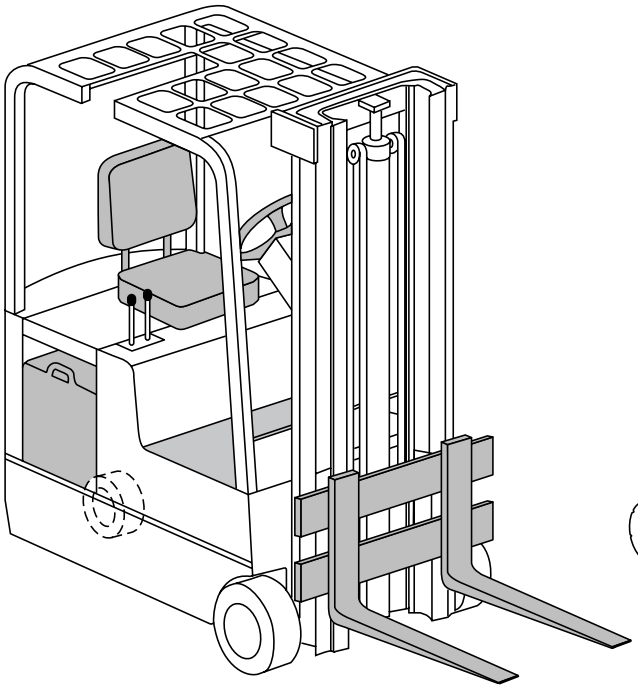

(a) Sit-Down Rider — Three-Wheel

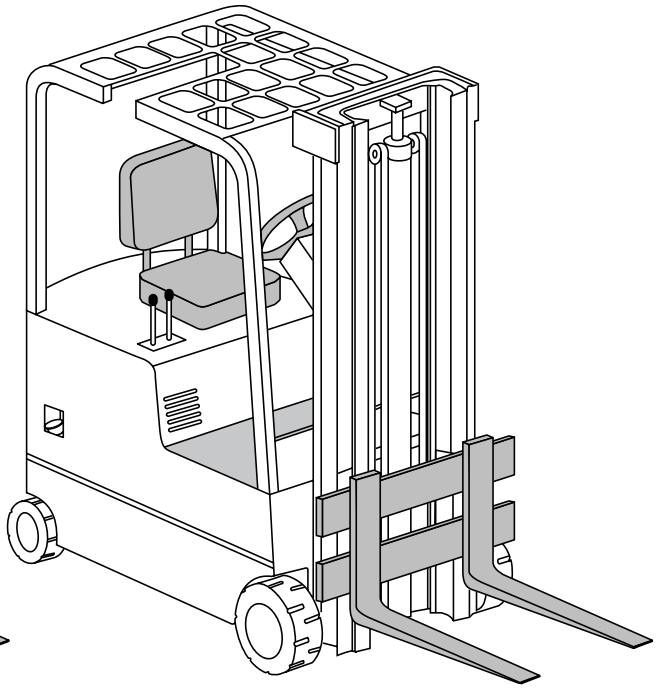

(b) Sit-Down Rider — Four Wheel

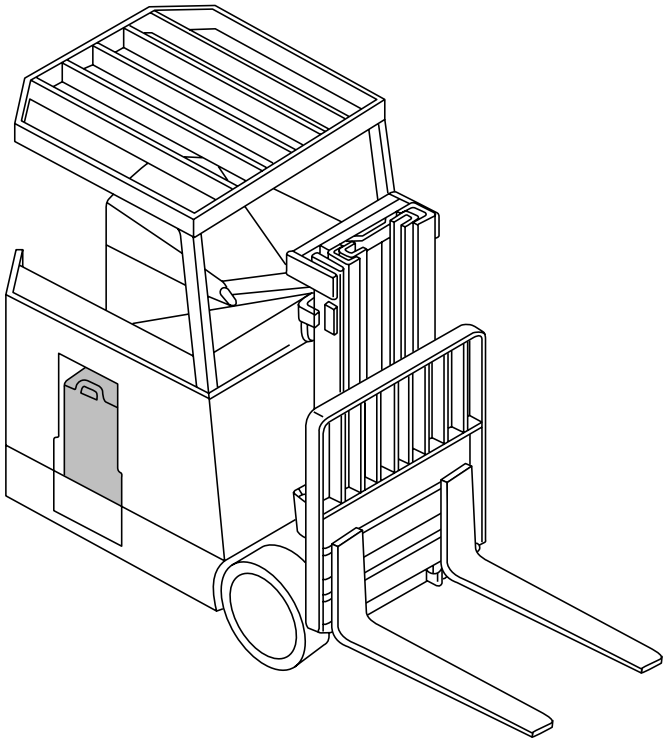

(c) Stand-Up Rider

GENERAL NOTE: The following illustrations are intended to represent basic truck configurations and not to define truck design.

Fig. 11 Types of Trucks: High Lift Counterbalanced Truck, Cantilever Truck, Rider Truck, Forklift Truck

Copyright ASME International
Provided by IHS under license with ASME
No reproduction or networking permitted without license from IHS Not for Resale

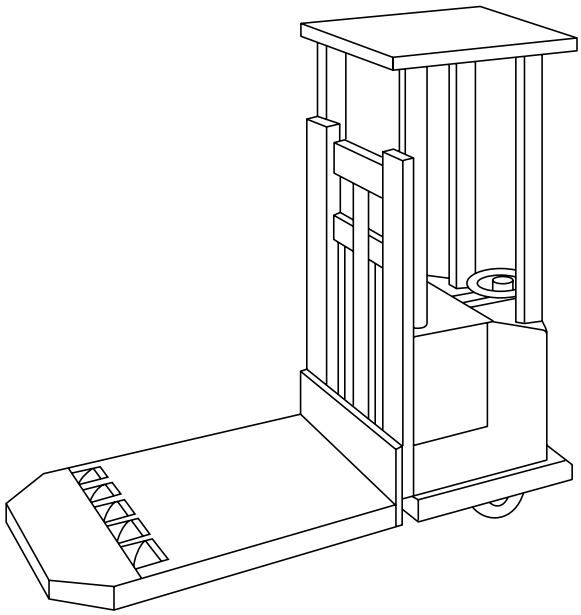

Fig. 12 High Lift Rider Platform Truck

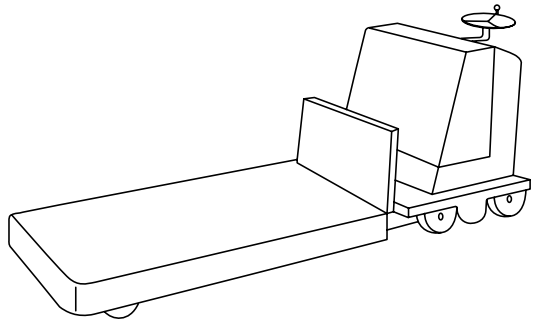

Fig. 13 Low Lift Truck, Low Lift Platform Truck

truck, low lift order picker: a low lift truck controllable by the operator when stationed on, or walking adjacent to, the truck, and intended for (manual) stock selection. The truck may be capable of self-loading, and neither the load-carrying surface nor the operators platform shall elevate higher than 1 200 mm (47.25 in.). See Figs. 14 and 15.

truck, low lift platform: a self-loading truck equipped with a load platform intended primarily for transporting loaded skid platforms.

truck, motorized hand: a truck that is designed to be controlled by a walking operator. See Figs. 16 and 17.

truck, motorized hand/rider: a dual purpose truck that is designed to be controlled by a walking or by a riding operator.

truck, narrow aisle: a self-loading truck primarily intended for right angle stacking in aisles narrower than

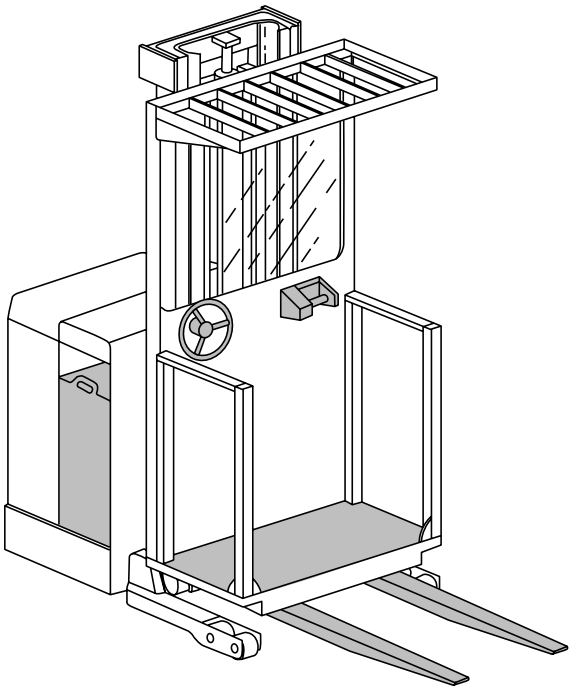

Fig. 14 High Lift Order Picker Rider Truck

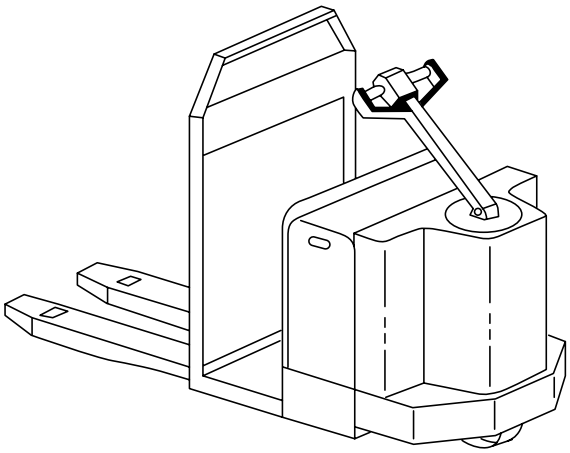

Fig. 15 Low Lift Order Picker Truck

those normally required by counterbalanced trucks of the same capacity. See Fig. 18.

truck, operator-up, high lift: a high lift truck controllable by an operator stationed on a platform that is elevatable. Some popular types are: high lift order picker trucks and operator-up counterbalanced front side loader trucks. See Fig. 19.

truck, pallet: a self-loading, low lift truck equipped with wheeled forks of dimensions to go between the top and bottom boards of a double-faced pallet and having

Copyright ASME International
Provided by IHS under license with ASME
No reproduction or networking permitted without license from IHS Not for Resale

wheels capable of lowering into spaces between the bottom boards so as to raise the pallet off the floor for transporting.

truck, powered industrial: a mobile power propelled truck used to carry, push, pull, lift, stack, or tier material.

truck, reach: a self-loading truck, generally high lift, having load-engaging means mounted so it can be extended forwardly under control to permit a load to be picked up and deposited in the extended position and transported in the retracted position. See Fig. 20.

truck, rider: a truck that is designed to be controlled by a riding operator.

truck, side loader: a self-loading truck, generally high lift, having load-engaging means mounted in such a manner that it can be extended laterally under control to permit a load to be picked up and deposited in the extended position and transported in the retracted position. See Fig. 21.

truck, straddle: a general class of cantilever truck with horizontal, structural wheel-supported members extending forward from the main body of the truck, generally high lift, for picking up and hauling loads between its outrigger arms.

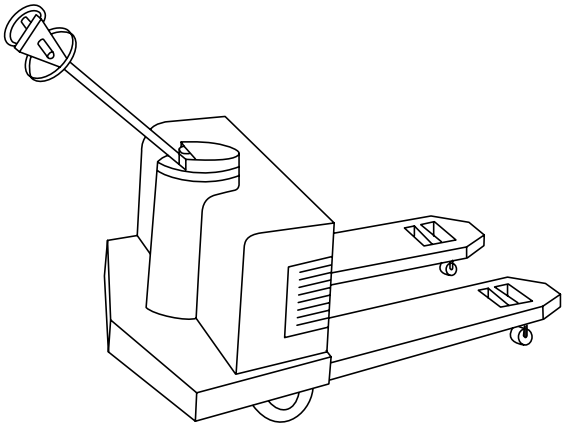

Fig. 16 Motorized Hand Truck, Pallet Truck

user: a person or organization responsible for employing powered industrial trucks.

work platform: see *platform, work.*

--`,,```,,,,````-`-`,,`,,`,`,,`---

Copyright ASME International
Provided by IHS under license with ASME
No reproduction or networking permitted without license from IHS Not for Resale

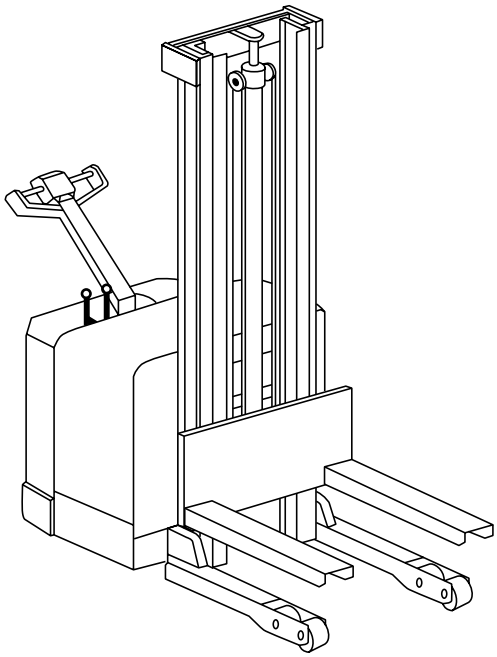

(a) Pallet Truck

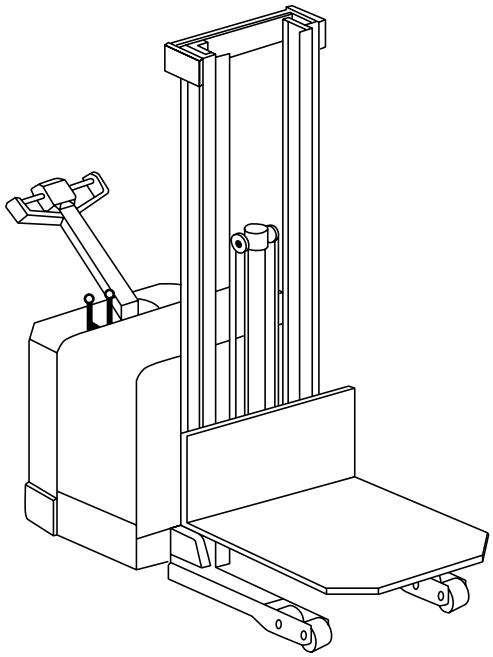

(b) Platform Truck

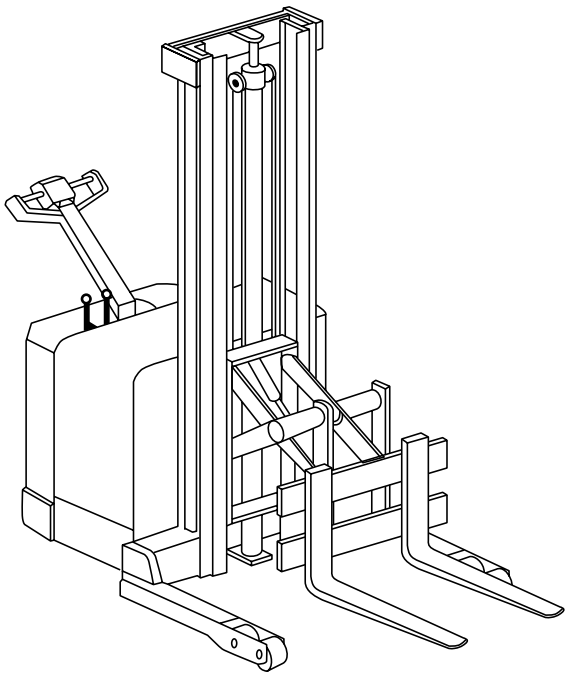

(c) Reach Truck

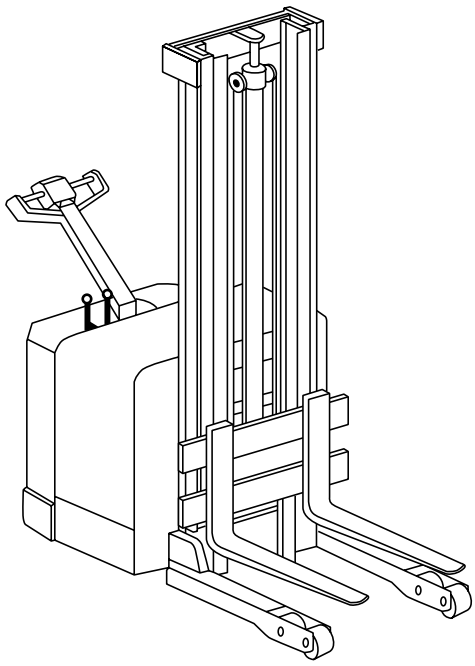

(d) Straddle Truck

Fig. 17 High Lift Motorized Hand Trucks

Copyright ASME International
Provided by IHS under license with ASME
No reproduction or networking permitted without license from IHS
Not for Resale

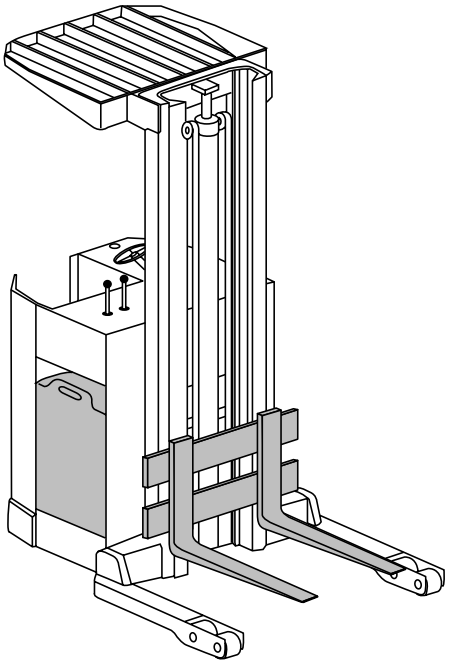

Fig. 18 Narrow Aisle Rider Truck, Straddle Truck

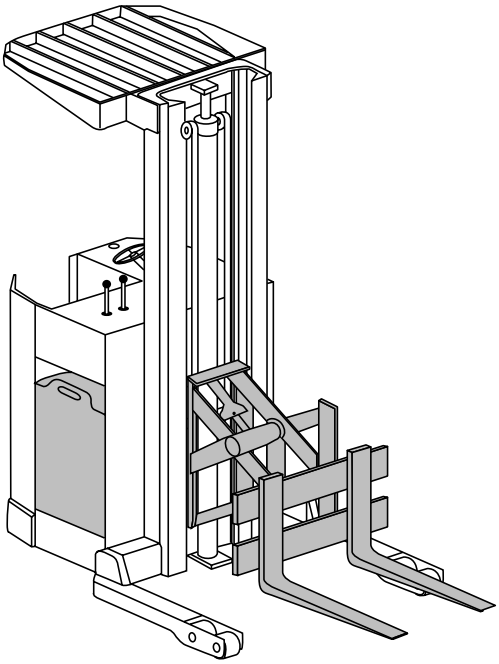

Fig. 20 Reach Rider Truck

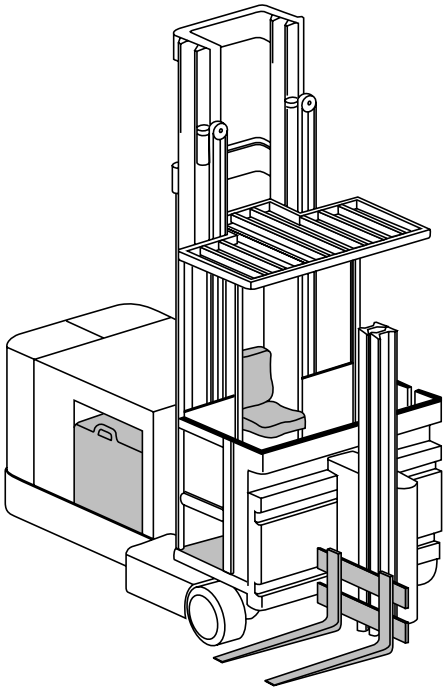

Fig. 19 Operator-Up Counterbalanced Front/Side Loader Truck

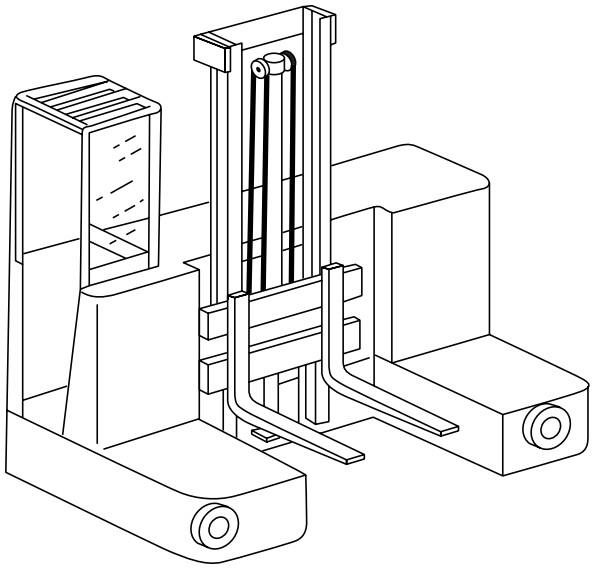

Fig. 21 Single Side Loader Rider Truck

Copyright ASME International
Provided by IHS under license with ASME
No reproduction or networking permitted without license from IHS Not for Resale

Part V
References

The following are safety standards and codes (unless otherwise noted) referenced within this Standard. It is the intent of this Standard to refer to the standards and codes listed below in their latest edition when they are referenced within the Standard.

ANSI/NFPA 30-1996, Flammable and Combustible Liquids Code

ANSI/NFPA 58-1995, Storage and Handling of Liquefied Petroleum Gases

ANSI/NFPA 505-1996, Fire Safety Standard for Powered Industrial Trucks Including Type Designations, Areas of Use, Maintenance, and Operation

Publisher: National Fire Protection Association (NFPA), 1 Batterymarch Park, Quincy, MA 02269-9101

ANSI/UL 558-1991 Standard for Safety for Internal Combustion-Engine-Powered Industrial Trucks

ANSI/UL 583-1991 Standard for Safety for Electric-Battery-Powered Industrial Trucks

Publisher: Underwriters Laboratories, Inc. (UL), 333 Pfingsten Road, Northbrook, IL 60062-2096

ASME B56.11.3-1992, Load Handling Symbols for Powered Industrial Trucks (not a safety standard)

ASME B56.11.5-1992, Measurement of Sound Emitted by Low Lift, High Lift, and Rough Terrain Powered Industrial Trucks (not a safety standard)

Publisher: The American Society of Mechanical Engineers (ASME International), Three Park Avenue, New York, NY 10016-5990; Order Department: 22 Law Drive, Box 2300, Fairfield, NJ 07007-2300

ANSI/IES RP7-1990, Practice for Industrial Lighting (not a safety standard)

ANSI Z535.2-1991, Environmental and Facility Safety Signs

ISO 5353-1978, Earth-Moving Machinery — Seat Index Point (International Standard)

Publisher: American National Standards Institute, Inc. (ANSI), 25 West 43rd Street, New York, NY 10036

The following are related documents:

ASME B20.1-1996, Safety Standard for Conveyors and Related Equipment

ASME B30.9-1996, Slings

ASME B56.11.4-1992, Hook-Type Forks and Fork Carriers for Powered Industrial Forklift Trucks (not a safety standard)

Publisher: The American Society of Mechanical Engineers (ASME International), Three Park Avenue, New York, NY 10016-5990

--`,,```,,,,````-`-`,,`,,`,`,,`---

Copyright ASME International
Provided by IHS under license with ASME
No reproduction or networking permitted without license from IHS Not for Resale

Copyright ASME International
Provided by IHS under license with ASME
No reproduction or networking permitted without license from IHS
Not for Resale

ASME B56.1-2004 INTERPRETATIONS

Replies to Technical Inquiries
May 2003 through January 2004

FOREWORD

This publication includes all of the written replies issued between the indicated dates by the Secretary, speaking for the ASME B56 Committee on Powered and Nonpowered Industrial Trucks, to inquiries concerning interpretations of technical aspects of ASME B56.1, Safety Standard for Low Lift and High Lift Trucks.

These replies are taken verbatim from the original letters except for a few typographical corrections and some minor editorial corrections made for the purpose of improved clarity. In some few instances, a review of the interpretation revealed a need for corrections of a technical nature; in these cases a corrected interpretation follows immediately after the original reply.

These interpretations were prepared in accordance with the accredited ASME procedures. ASME procedures provide for reconsideration of these interpretations when and if additional information is available which the inquirer believes might affect the interpretation. Further, persons aggrieved by this interpretation may appeal to the cognizant ASME Committee or Subcommittee. ASME does not "approve," "certify," "rate," or "endorse" any item, construction, proprietary device, or activity.

Copyright ASME International
Provided by IHS under license with ASME
No reproduction or networking permitted without license from IHS
Not for Resale

Interpretation: 1-75

Subject: ASME B56.1-2000, Para. 7.5.2, Nameplates and Markings

Date Issued: May 9, 2003

Question (1): Is it permissible that two nameplates are provided with a product, one of which describes item (a) truck model designation and serial number, (b) truck weight, and (d) type designation, and the other nameplate shows item (c) designation of compliance with ASME?

Reply (1): Yes, para. 7.5.2 allows for "nameplate(s)" meaning more than one is permissible.

Question (2): In the case of multiple nameplates, is it necessary to show the company name to the above nameplate (c)?

Reply (2): No, manufacturers name is not required, but if not, the two plates should appear in close proximity to each other.

Question (3): Is it permissible to use nonmetallic durable plate for the nameplates?

Reply (3): Yes, provided it is durable and corrosive resistant.

Copyright ASME International
Provided by IHS under license with ASME
No reproduction or networking permitted without license from IHS Not for Resale

Interpretation: 1-76

Subject: ASME B56.1-2000, Paras. 7.5.4(b) and 7.6.4(i), Sideshifting

Date Issued: May 16, 2003

Question (1): Paragraph 7.6.4(i) indicates how to test a truck equipped with a "sideshifting" attachment that displaces the center of gravity a predetermined amount. Would the requirements of this section apply to attachments, which allow two loads to be picked side-by-side, if the operator picks a load on one side only? Doing so would offset the load center well beyond the limits listed in para. 7.6.4(i). One could argue the attachment is not being used as intended by the attachment and/or truck manufacturer.

Reply (1): Side-by-side load capability is not a sideshift operation. Rating depends on what the attachment manufacturer and the truck manufacturer say. If the users expect to be picking up on one side, then that should be rated. Most attachment manufacturers expect an evenly distributed load. Some have a label that says, "must have an evenly distributed load." Also, many of these types of attachments are single double load pick-ups meaning they can collapse the forks down so that they pick up only one load.

Question (2): Similar to Question (1), how would one rate attachments such as a paper roll clamp with one fixed arm and one moving arm, or a clamp with a swinging frame? Both attachments offset the load center to one side, but do so by a means other than "sideshifting."

Reply (2): The truck should be rated for the attachment and the expected use. If it is intended on carrying and stacking off set then it need to be rated. The manufacturer will rate for the expected/intended use of the truck.

Question (3): How would one mark the capacity plate on the truck to indicate the capacity of the truck equipped with a swinging-frame paper roll clamp or multiload handler?

Reply (3): Dual rate may be needed if there are two distinct load positions/types. Or, it may have one rating based on the worst-case scenario.

Question (4): If a manufacturer ships a truck from the factory with an attachment on the truck, they must list the truck capacity with the attachment, according to para. 7.5.4(b). Must they also stamp the plate to indicate the capacity with forks only? After reading para. 7.5.4(a) the impression is that it may be required to list the capacity with forks only on trucks equipped with an attachment. The confusion is created by the use of the word "also" in the first sentence of para. 7.5.4(b). There are occasions when it is beneficial to list both capacities, but not every time.

Reply (4): The user needs to rate for the intended use. If the attachment is most likely to stay on for the life of the truck then a single rating is adequate. If the attachment is to be permanently removed, then there will have to be a new plate for forks only usage. If it will be going from forks to attachment use on a regular basis then a dual rating for two different set ups should be considered.

Question (5): When the load exceeds the predetermined amount, the capacity derived from testing the truck with the load shifted has to be listed. Can a list be created with what the rating would be if the attachment is still on the truck but the operator centers the load?

Reply (5): Yes, there can be dual ratings.

Copyright ASME International
Provided by IHS under license with ASME
No reproduction or networking permitted without license from IHS Not for Resale

Interpretation: 1-77

Subject: ASME B56.1b-2003, Para. 7.5.2(b), Nameplates and Markings

Date Issued: January 6, 2004

Question (1): If a manufacturer weighs a truck and places that exact weight on the nameplate, would the nameplate still require a tolerance?

Reply (1): No. If the actual weight is measured and recorded on the serial number plate, there would be no need to record a tolerance.

Copyright ASME International
Provided by IHS under license with ASME
No reproduction or networking permitted without license from IHS Not for Resale

ASME B56.1-2004

ISBN 0-7918-2924-3





J08504

Copyright ASME International
Provided by IHS under license with ASME
No reproduction or networking permitted without license from IHS

Not for Resale