ASME B31.3-2004

(Revision of ASME B31.3-2002)

Process Piping

ASME Code for Pressure Piping, B31

AN AMERICAN NATIONAL STANDARD



The American Society of Mechanical Engineers

--`,,```,,,,````-`-`,,`,,`,`,,`---

Copyright ASME International
Provided by IHS under license with ASME
No reproduction or networking permitted without license from IHS

Not for Resale

ASME B31.3-2004

(Revision of ASME B31.3-2002)

Process Piping

ASME CODE FOR PRESSURE PIPING, B31

AN AMERICAN NATIONAL STANDARD

The American Society of Mechanical Engineers

Three Park Avenue • New York, NY 10016

Copyright ASME International
Provided by IHS under license with ASME
No reproduction or networking permitted without license from IHS

Not for Resale

Date of Issuance: April 29, 2005

Mandatory Date: October 31, 2005

This edition was approved by the American National Standards Institute and designated ASME B31.3-2004 on June 24, 2004.

The next edition of this Code is scheduled for publication in 2006. There will be no addenda issued to ASME B31.3-2004.

ASME issues written replies to inquiries concerning interpretations of technical aspects of the Code. Interpretations are published on the ASME Web site under the Committee Pages at http://www.asme.org/codes/ as they are issued.

Periodically certain actions of the ASME B31 Committee will be published as Cases. While these Cases do not constitute formal revisions of the Code, they may be used in specifications, or otherwise, as representing considered opinions of the Committee. The Cases are not part of the Code and are published separately.

ASME is the registered trademark of The American Society of Mechanical Engineers.

This code or standard was developed under procedures accredited as meeting the criteria for American National Standards. The Standards Committee that approved the code or standard was balanced to assure that individuals from competent and concerned interests have had an opportunity to participate. The proposed code or standard was made available for public review and comment, which provides an opportunity for additional public input from industry, academia, regulatory agencies, and the public-at-large.

ASME does not "approve," "rate," or "endorse" any item, construction, proprietary device, or activity.

ASME does not take any position with respect to the validity of any patent rights asserted in connection with any items mentioned in this document, and does not undertake to insure anyone utilizing a standard against liability for infringement of any applicable Letters Patent, nor assume any such liability. Users of a code or standard are expressly advised that determination of the validity of any such patent rights, and the risk of infringement of such rights, is entirely their own responsibility.

Participation by federal agency representative(s) or person(s) affiliated with industry is not to be interpreted as government or industry endorsement of this code or standard.

ASME accepts responsibility for only those interpretations issued in accordance with governing ASME procedures and policies which preclude the issuance of interpretations by individual volunteers.

No part of this document may be reproduced in any form,
in an electronic retrieval system or otherwise,
without the prior written permission of the publisher.

The American Society of Mechanical Engineers
Three Park Avenue, New York, NY 10016-5990

Copyright © 2005 by
THE AMERICAN SOCIETY OF MECHANICAL ENGINEERS
All rights reserved
Printed in U.S.A.

--`,,```,,,,````-`-`,,`,,`,`,,`---

Copyright ASME International
Provided by IHS under license with ASME
No reproduction or networking permitted without license from IHS

Not for Resale

CONTENTS

Foreword		xi
Committee Personnel		xiii
Introduction		xvi
Summary of Changes		xviii
Chapter I	**Scope and Definitions**	1
300	General Statements	1
Chapter II	**Design**	9
Part 1	**Conditions and Criteria**	9
301	Design Conditions	9
302	Design Criteria	11
Part 2	**Pressure Design of Piping Components**	17
303	General	17
304	Pressure Design of Components	18
Part 3	**Fluid Service Requirements for Piping Components**	27
305	Pipe	27
306	Fittings, Bends, Miters, Laps, and Branch Connections	28
307	Valves and Specialty Components	29
308	Flanges, Blanks, Flange Facings, and Gaskets	30
309	Bolting	30
Part 4	**Fluid Service Requirements for Piping Joints**	31
310	General	31
311	Welded Joints	31
312	Flanged Joints	32
313	Expanded Joints	32
314	Threaded Joints	32
315	Tubing Joints	33
316	Caulked Joints	33
317	Soldered and Brazed Joints	33
318	Special Joints	33
Part 5	**Flexibility and Support**	33
319	Piping Flexibility	33
321	Piping Support	38
Part 6	**Systems**	40
322	Specific Piping Systems	40
Chapter III	**Materials**	42
323	General Requirements	42
325	Materials — Miscellaneous	51
Chapter IV	**Standards for Piping Components**	52
326	Dimensions and Ratings of Components	52
Chapter V	**Fabrication, Assembly, and Erection**	55
327	General	55
328	Welding	55
330	Preheating	61
331	Heat Treatment	62
332	Bending and Forming	66
333	Brazing and Soldering	67

Copyright ASME International
Provided by IHS under license with ASME
No reproduction or networking permitted without license from IHS
Not for Resale

335	Assembly and Erection	67
Chapter VI	**Inspection, Examination, and Testing**	69
340	Inspection	69
341	Examination	69
342	Examination Personnel	75
343	Examination Procedures	75
344	Types of Examination	75
345	Testing	76
346	Records	79
Chapter VII	**Nonmetallic Piping and Piping Lined With Nonmetals**	80
A300	General Statements	80
Part 1	**Conditions and Criteria**	80
A301	Design Conditions	80
A302	Design Criteria	80
Part 2	**Pressure Design of Piping Components**	82
A303	General	82
A304	Pressure Design of Piping Components	82
Part 3	**Fluid Service Requirements for Piping Components**	83
A305	Pipe	83
A306	Nonmetallic Fittings, Bends, Miters, Laps, and Branch Connections	83
A307	Nonmetallic Valves and Specialty Components	84
A308	Flanges, Blanks, Flange Facings, and Gaskets	84
A309	Bolting	84
Part 4	**Fluid Service Requirements for Piping Joints**	85
A310	General	85
A311	Bonded Joints in Plastics	85
A312	Flanged Joints	85
A313	Expanded Joints	85
A314	Threaded Joints	85
A315	Tubing Joints	85
A316	Caulked Joints	85
A318	Special Joints	85
Part 5	**Flexibility and Support**	86
A319	Flexibility of Nonmetallic Piping	86
A321	Piping Support	87
Part 6	**Systems**	88
A322	Specific Piping Systems	88
Part 7	**Materials**	88
A323	General Requirements	88
A325	Materials — Miscellaneous	90
Part 8	**Standards for Piping Components**	90
A326	Dimensions and Ratings of Components	90
Part 9	**Fabrication, Assembly, and Erection**	90
A327	General	90
A328	Bonding of Plastics	93
A329	Fabrication of Piping Lined With Nonmetals	96
A332	Bending and Forming	96
A334	Joining Nonplastic Piping	97
A335	Assembly and Erection	97
Part 10	**Inspection, Examination, and Testing**	98
A340	Inspection	98
A341	Examination	98
A342	Examination Personnel	98
A343	Examination Procedures	98

Copyright ASME International
Provided by IHS under license with ASME
No reproduction or networking permitted without license from IHS
Not for Resale

A344 Types of Examination 98
A345 Testing 99
A346 Records 100

Chapter VIII Piping for Category M Fluid Service 101
M300 General Statements 101
Part 1 Conditions and Criteria 101
M301 Design Conditions 101
M302 Design Criteria 101
Part 2 Pressure Design of Metallic Piping Components 102
M303 General 102
M304 Pressure Design of Metallic Components 102
Part 3 Fluid Service Requirements for Metallic Piping Components 102
M305 Pipe 102
M306 Metallic Fittings, Bends, Miters, Laps, and Branch Connections 102
M307 Metallic Valves and Specialty Components 102
M308 Flanges, Blanks, Flange Facings, and Gaskets 103
M309 Bolting 103
Part 4 Fluid Service Requirements for Metallic Piping Joints 103
M310 Metallic Piping, General 103
M311 Welded Joints in Metallic Piping 103
M312 Flanged Joints in Metallic Piping 103
M313 Expanded Joints in Metallic Piping 103
M314 Threaded Joints in Metallic Piping 103
M315 Tubing Joints in Metallic Piping 103
M316 Caulked Joints 104
M317 Soldered and Brazed Joints 104
M318 Special Joints in Metallic Piping 104
Part 5 Flexibility and Support of Metallic Piping 104
M319 Flexibility of Metallic Piping 104
M321 Piping Support 104
Part 6 Systems 104
M322 Specific Piping Systems 104
Part 7 Metallic Materials 104
M323 General Requirements 104
M325 Materials — Miscellaneous 104
Part 8 Standards for Piping Components 105
M326 Dimensions and Ratings of Components 105
Part 9 Fabrication, Assembly, and Erection of Metallic Piping 105
M327 General 105
M328 Welding of Metals 105
M330 Preheating of Metals 105
M331 Heat Treatment of Metals 105
M332 Bending and Forming of Metals 105
M335 Assembly and Erection of Metallic Piping 105
Part 10 Inspection, Examination, Testing, and Records of Metallic Piping 106
M340 Inspection 106
M341 Examination 106
M342 Examination Personnel 106
M343 Examination Procedures 106
M344 Types of Examination 106
M345 Testing 106
M346 Records 106

Parts 11 Through 20, Corresponding to Chapter VII 106
MA300 General Statements 106

Copyright ASME International
Provided by IHS under license with ASME
No reproduction or networking permitted without license from IHS
Not for Resale

Part 11	**Conditions and Criteria**	106
MA301	Design Conditions	106
MA302	Design Criteria	106
Part 12	**Pressure Design of Nonmetallic Piping Components**	106
MA303	General	106
MA304	Pressure Design of Nonmetallic Components	107
Part 13	**Fluid Service Requirements for Nonmetallic Piping Components**	107
MA305	Pipe	107
MA306	Nonmetallic Fittings, Bends, Miters, Laps, and Branch Connections	107
MA307	Nonmetallic Valves and Specialty Components	107
MA308	Flanges, Blanks, Flange Facings, and Gaskets	107
MA309	Bolting	107
Part 14	**Fluid Service Requirements for Nonmetallic Piping Joints**	107
MA310	General	107
MA311	Bonded Joints	107
MA312	Flanged Joints	107
MA313	Expanded Joints	107
MA314	Threaded Joints	107
MA315	Tubing Joints in Nonmetallic Piping	107
MA316	Caulked Joints	107
MA318	Special Joints	107
Part 15	**Flexibility and Support of Nonmetallic Piping**	107
MA319	Piping Flexibility	107
MA321	Piping Support	107
Part 16	**Nonmetallic and Nonmetallic Lined Systems**	107
MA322	Specific Piping Systems	107
Part 17	**Nonmetallic Materials**	108
MA323	General Requirements	108
Part 18	**Standards for Nonmetallic and Nonmetallic Lined Piping Components**	108
MA326	Dimensions and Ratings of Components	108
Part 19	**Fabrication, Assembly, and Erection of Nonmetallic and Nonmetallic Lined Piping**	108
MA327	General	108
MA328	Bonding of Plastics	108
MA329	Fabrication of Piping Lined With Nonmetals	108
MA332	Bending and Forming	108
MA334	Joining Nonplastic Piping	108
MA335	Assembly and Erection	108
Part 20	**Inspection, Examination, Testing, and Records of Nonmetallic and Nonmetallic Lined Piping**	108
MA340	Inspection	108
MA341	Examination	108
MA342	Examination Personnel	108
MA343	Examination Procedures	108
MA344	Types of Examination	108
MA345	Testing	108
MA346	Records	108
Chapter IX	**High Pressure Piping**	109
K300	General Statements	109
Part 1	**Conditions and Criteria**	109
K301	Design Conditions	109
K302	Design Criteria	110
Part 2	**Pressure Design of Piping Components**	112
K303	General	112

Copyright ASME International
Provided by IHS under license with ASME
No reproduction or networking permitted without license from IHS
Not for Resale

K304	Pressure Design of High Pressure Components	112
Part 3	**Fluid Service Requirements for Piping Components**	115
K305	Pipe	115
K306	Fittings, Bends, and Branch Connections	115
K307	Valves and Specialty Components	116
K308	Flanges, Blanks, Flange Facings, and Gaskets	116
K309	Bolting	116
Part 4	**Fluid Service Requirements for Piping Joints**	117
K310	General	117
K311	Welded Joints	117
K312	Flanged Joints	117
K313	Expanded Joints	117
K314	Threaded Joints	117
K315	Tubing Joints	117
K316	Caulked Joints	117
K317	Soldered and Brazed Joints	117
K318	Special Joints	118
Part 5	**Flexibility and Support**	118
K319	Flexibility	118
K321	Piping Support	118
Part 6	**Systems**	118
K322	Specific Piping Systems	118
Part 7	**Materials**	119
K323	General Requirements	119
K325	Miscellaneous Materials	122
Part 8	**Standards for Piping Components**	122
K326	Dimensions and Ratings of Components	122
Part 9	**Fabrication, Assembly, and Erection**	122
K327	General	122
K328	Welding	122
K330	Preheating	125
K331	Heat Treatment	125
K332	Bending and Forming	126
K333	Brazing and Soldering	127
K335	Assembly and Erection	127
Part 10	**Inspection, Examination, and Testing**	127
K340	Inspection	127
K341	Examination	127
K342	Examination Personnel	128
K343	Examination Procedures	128
K344	Types of Examination	128
K345	Testing	130
K346	Records	131

Figures

300.1.1	Diagram Illustrating Application of B31.3 Piping at Equipment	3
302.3.5	Stress Range Reduction Factor, f	16
304.2.1	Nomenclature for Pipe Bends	19
304.2.3	Nomenclature for Miter Bends	19
304.3.3	Branch Connection Nomenclature	21
304.3.4	Extruded Outlet Header Nomenclature	23
304.5.3	Blanks	27
319.4.4A	Moments in Bends	36
319.4.4B	Moments in Branch Connections	37
323.2.2A	Minimum Temperatures Without Impact Testing for Carbon Steel Materials	45

Copyright ASME International
Provided by IHS under license with ASME
No reproduction or networking permitted without license from IHS
Not for Resale

323.2.2B Reduction in Minimum Design Metal Temperature Without Impact Testing 47
328.3.2 Typical Backing Rings and Consumable Inserts 57
328.4.2 Typical Butt Weld End Preparation 58
328.4.3 Trimming and Permitted Misalignment 58
328.4.4 Preparation for Branch Connections 59
328.5.2A Fillet Weld Size 59
328.5.2B Typical Details for Double-Welded Slip-On and Socket Welding Flange Attachment Welds 59
328.5.2C Minimum Welding Dimensions for Socket Welding Components Other Than Flanges 60
328.5.4A, B, C Typical Welded Branch Connections 60
328.5.4D Acceptable Details for Branch Attachment Welds 60
328.5.4E Acceptable Details for Branch Attachment Suitable for 100% Radiography 61
328.5.5 Typical Fabricated Laps 61
335.3.3 Typical Threaded Joints Using Straight Threads 68
341.3.2 Typical Weld Imperfections 74
A328.5 Typical Plastic Piping Joints 95
K323.3.3 Example of an Acceptable Impact Test Specimen 122
K328.4.3 Pipe Bored for Alignment: Trimming and Permitted Misalignment 125
K328.5.4 Some Acceptable Welded Branch Connections Suitable for 100% Radiography 126

Tables

300.4 Status of Appendices in B31.3 8
302.3.3C Increased Casting Quality Factors, E_c 14
302.3.3D Acceptance Levels for Castings 14
302.3.4 Longitudinal Weld Joint Quality Factor, E_j 15
304.1.1 Values of Coefficient Y for $t < D/6$ 18
304.4.1 BPV Code References for Closures 25
308.2.1 Permissible Sizes/Rating Classes for Slip-On Flanges Used as Lapped Flanges 30
314.2.1 Minimum Thickness of Male Threaded Components 32
323.2.2 Requirements for Low Temperature Toughness Tests for Metals 43
323.2.2A Tabular Values for Minimum Temperatures Without Impact Testing for Carbon Steel Materials 46
323.3.1 Impact Testing Requirements for Metals 48
323.3.4 Charpy Impact Test Temperature Reduction 49
323.3.5 Minimum Required Charpy V-Notch Impact Values 50
326.1 Component Standards 53
330.1.1 Preheat Temperatures 63
331.1.1 Requirements for Heat Treatment 64
341.3.2 Acceptance Criteria for Welds and Examination Methods for Evaluating Weld Imperfections 71
A323.2.2 Requirements for Low Temperature Toughness Tests for Nonmetals 89
A323.4.2C Recommended Temperature Limits for Reinforced Thermosetting Resin Pipe 89
A323.4.3 Recommended Temperature Limits for Thermoplastics Used as Linings 90
A326.1 Component Standards 91
A341.3.2 Acceptance Criteria for Bonds 99
K302.3.3D Acceptable Severity Levels for Steel Castings 112
K305.1.2 Required Ultrasonic or Eddy Current Examination of Pipe and Tubing for Longitudinal Defects 116
K323.3.1 Impact Testing Requirements 121
K323.3.5 Minimum Required Charpy V-Notch Impact Values 123

Copyright ASME International
Provided by IHS under license with ASME
No reproduction or networking permitted without license from IHS
Not for Resale

K326.1 Component Standards 124
K341.3.2 Acceptance Criteria for Welds 129

Appendices

Appendix A Allowable Stresses and Quality Factors for Metallic Piping and Bolting Materials 133
Specification Index for Appendix A 134
Notes for Appendix A Tables 137
Table A-1 Basic Allowable Stresses in Tension for Metals 141
Iron
Castings 141
Carbon Steel
Pipes and Tubes 142
Pipes (Structural Grade) 146
Plates and Sheets 146
Plates and Sheets (Structural) 148
Forgings and Fittings 148
Castings 148
Low and Intermediate Alloy Steel
Pipes 150
Plates 152
Forgings and Fittings 154
Castings 156
Stainless Steel
Pipes and Tubes 158
Plates and Sheets 162
Forgings and Fittings 164
Bar 168
Castings 168
Copper and Copper Alloy
Pipes and Tubes 170
Plates and Sheets 170
Forgings 172
Castings 172
Nickel and Nickel Alloy
Pipes and Tubes 174
Plates and Sheets 176
Forgings and Fittings 178
Rod and Bar 180
Castings 180
Titanium and Titanium Alloy
Pipes and Tubes 182
Plates and Sheets 182
Forgings 182
Zirconium and Zirconium Alloy
Pipes and Tubes 182
Plates and Sheets 182
Forgings and Bar 182
Aluminum Alloy
Seamless Pipes and Tubes 184
Welded Pipes and Tubes 185
Structural Tubes 185
Plates and Sheets 186
Forgings and Fittings 188
Castings 189
Table A-1A Basic Casting Quality Factors E_c 190

--`,,```,,,,````-`-`,,`,,`,`,,`---

Copyright ASME International
Provided by IHS under license with ASME
No reproduction or networking permitted without license from IHS

Not for Resale

Table A-1B Basic Quality Factors for Longitudinal Weld Joints in Pipes, Tubes, and Fittings E_j 191
Carbon Steel 191
Low and Intermediate Alloy Steel 191
Stainless Steel 192
Copper and Copper Alloy 192
Nickel and Nickel Alloy 193
Titanium and Titanium Alloy 193
Zirconium and Zirconium Alloy 193
Aluminum Alloy 193
Table A-2 Design Stress Values for Bolting Materials 194
Carbon Steel 194
Alloy Steel 194
Stainless Steel 194
Copper and Copper Alloy 200
Nickel and Nickel Alloy 200
Aluminum Alloy 202
Appendix B Stress Tables and Allowable Pressure Tables for Nonmetals 204
Appendix C Physical Properties of Piping Materials 209
Appendix D Flexibility and Stress Intensification Factors 226
Appendix E Reference Standards 230
Appendix F Precautionary Considerations 236
Appendix G Safeguarding 241
Appendix H Sample Calculations for Branch Reinforcement 243
Appendix J Nomenclature 247
Appendix K Allowable Stresses for High Pressure Piping 257
Appendix L Aluminum Alloy Pipe Flanges 272
Appendix M Guide to Classifying Fluid Services 275
Appendix P Alternative Rules for Evaluating Stress Range 277
Appendix Q Quality System Program 279
Appendix S Piping System Stress Analysis Examples 280
Appendix V Allowable Variations in Elevated Temperature Service 285
Appendix X Metallic Bellows Expansion Joints 288
Appendix Z Preparation of Technical Inquiries 293

Index 294

Copyright ASME International
Provided by IHS under license with ASME
No reproduction or networking permitted without license from IHS
Not for Resale

FOREWORD

Responding to evident need and at the request of The American Society of Mechanical Engineers, the American Standards Association initiated Project B31 in March 1926, with ASME as sole administrative sponsor. The breadth of the field involved required that membership of the Sectional Committee be drawn from some 40 engineering societies, industries, government bureaus, institutes, and trade associations.

Initial publication in 1935 was as the American Tentative Standard Code for Pressure Piping. Revisions from 1942 through 1955 were published as American Standard Code for Pressure Piping, ASA B31.1. It was then decided to publish as separate documents the various industry Sections, beginning with ASA B31.8-1955, Gas Transmission and Distribution Piping Systems. The first Petroleum Refinery Piping Code Section was designated ASA B31.3-1959. ASA B31.3 revisions were published in 1962 and 1966.

In 1967–1969, the American Standards Association became first the United States of America Standards Institute, then the American National Standards Institute. The Sectional Committee became American National Standards Committee B31 and the Code was renamed the American National Standard Code for Pressure Piping. The next B31.3 revision was designated ANSI B31.3-1973. Addenda were published through 1975.

A draft Code Section for Chemical Plant Piping, prepared by Section Committee B31.6, was ready for approval in 1974. It was decided, rather than have two closely related Code Sections, to merge the Section Committees and develop a joint Code Section, titled Chemical Plant and Petroleum Refinery Piping. The first edition was published as ANSI B31.3-1976.

In this Code, responsibility for piping design was conceptually integrated with that for the overall processing facility, with safeguarding recognized as an effective safety measure. Three categories of Fluid Service were identified, with a separate Chapter for Category M Fluid Service. Coverage for nonmetallic piping was introduced. New concepts were better defined in five Addenda, the last of which added Appendix M, a graphic aid to selection of the proper Fluid Service category.

The Standards Committee was reorganized in 1978 as a Committee operating under ASME procedures with ANSI accreditation. It is now the ASME Code for Pressure Piping, B31 Committee. Section committee structure remains essentially unchanged.

The second edition of Chemical Plant and Petroleum Refinery Piping was compiled from the 1976 Edition and its five Addenda, with nonmetal requirements editorially relocated to a separate Chapter. Its new designation was ANSI/ASME B31.3-1980.

Section Committee B31.10 had a draft Code for Cryogenic Piping ready for approval in 1981. Again, it was decided to merge the two Section Committees and develop a more inclusive Code with the same title. The work of consolidation was partially completed in the ANSI/ASME B31.3-1984 Edition.

Significant changes were made in Addenda to the 1984 Edition: integration of cryogenic requirements was completed; a new stand-alone Chapter on high-pressure piping was added; and coverage of fabrication, inspection, testing, and allowable stresses was reorganized. The new Edition was redesignated as ASME/ANSI B31.3-1987 Edition.

Addenda to subsequent Editions, published at three-year intervals, have been primarily to keep the Code up-to-date. New Appendices have been added, however, on requirements for bellows expansion joints, estimating service life, submittal of Inquiries, aluminum flanges, and quality control in the 1990, 1993, 1999, and 2002 Editions, all designated as ASME B31.3.

In a program to clarify the application of all Sections of the Code for Pressure Piping, changes are being made in the Introduction and Scope statements of B31.3, and its title is changed to Process Piping.

Under direction of ASME Codes and Standards management, metric units of measurement are being emphasized. With certain exceptions, SI metric units were listed first in the 1996 Edition and were designated as the standard. Instructions for conversion are given where metric data

Copyright ASME International
Provided by IHS under license with ASME
No reproduction or networking permitted without license from IHS
Not for Resale

are not available. U.S. customary units also are given. By agreement, either system may be used.

In this Edition of the Code, SI metric units are given first, with U.S. customary units in parentheses. Appendices H and X, the tables in Appendices A and K, and Tables C-1, C-3, and C-6 in Appendix C are exceptions. Values in metric units are to be regarded as the standard, unless otherwise agreed between the contracting parties. Instructions are given, in those tables that have not been converted for converting tabular data in U.S. units to appropriate SI units.

Interpretations are published on the ASME Web site. (Go to www.asme.org, click on Codes and Standards, click on Committee Pages, click on B31 Code for Pressure Piping, and then click on B31.3 Process Piping Section Committee.)

Code Cases are published on the ASME Web site. (Go to www.asme.org, click on Codes and Standards, click on Committee Pages, click on B31 Code for Pressure Piping, and then click on B31.3 Process Piping Section Committee.)

--`,,```,,,,````-`-`,,`,,`,`,,`---

Copyright ASME International
Provided by IHS under license with ASME
No reproduction or networking permitted without license from IHS
Not for Resale

ASME CODE FOR PRESSURE PIPING, B31

(The following is the roster of the Committee at the time of approval of this Code.)

OFFICERS

A. D. Nance, Jr., *Chair*
L. E. Hayden, *Vice Chair*
P. D. Stumpf, *Secretary*

COMMITTEE PERSONNEL

H. A. Ainsworth, Consultant
R. J. Appleby, Exxonmobil Development Co.
A. E. Beyer, Fluor Daniel, Inc.
K. C. Bodenhamer, Enterprise Products Co.
P. A. Bourquin, Consultant
J. S. Chin, El Paso Corp.
D. L. Coym, Parsons E&C
P. D. Flenner, Consumers Energy Co., Flenner Engineering Services
D. M. Fox, Oncor
J. W. Frey, Reliant Resources, Inc.
D. R. Frikken, Becht Engineering Co.
P. H. Gardner, Consultant
R. A. Grichuk, Fluor Daniel, Inc.
R. W. Haupt, Pressure Piping Engineering Associates, Inc.
L. E. Hayden, Jr., Consultant
G. A. Jolly, Vogt Valves/Flowserve
J. M. Kelly, Consultant
W. J. Koves, UOP LLC
K. K. Kyser, York International Frick
W. B. McGehee, Consultant
J. E. Meyer, Middough Consulting, Inc.
E. Michalopoulos, General Engineering and Commercial Co.
A. D. Nance, A D Nance Associates, Inc.
T. J. O'Grady, Veco Alaska, Inc.
R. G. Payne, Alstom Power
J. T. Powers, Parsons Energy & Chemicals
W. V. Richards, Consultant
E. H. Rinaca, Dominion/Virginia Power
M. J. Rosenfeld, Kiefner & Associates, Inc.
R. J. Silvia, Process Engineers and Constructors, Inc.
W. J. Sperko, Sperko Engineering Services, Inc.
G.W. Spohn III, Coleman Spohn Corp.
P. D. Stumpf, The American Society of Mechanical Engineers
A. L. Watkins, The Perry Nuclear Power Plant
R. B. West, State of Iowa

B31.3 PROCESS PIPING SECTION COMMITTEE

W. J. Koves, *Chair,* UOP LLC
C. Becht IV, *Vice Chair,* Becht Engineering Co.
M. Aranzamendez, *Secretary,* The American Society of Mechanical Engineers
B. L. Agee, GE Gas Turbines
J. J. Ardner, Consultant
D. D. Christian, Victaulic Co. of America
D. L. Coym, Parsons Energy & Chemicals Group
J. A. D'Avanzo, Dupont Engineering
C. E. Davila, Crane Valves
D. W. Diehl, COADE, Inc.
D. R. Edwards, Conoco Phillips
J. P. Ellenberger, Consultant
R. W. Engle, The Dow Chemical Co.
W. H. Eskridge, Jr., Aker Kvaerner E&C
D. J. Fetzner, BPX Alaska, Inc.
D. R. Frikken, Becht Engineering Co.
P. H. Gardner, Consultant
D. C. Glover, Halliburton Tech Service Co.
O. R. Greulich, NASA Ames Research Center
R. A. Grichuk, Fluor Daniel, Inc.
B. S. Harris, Consultant
R. W. Haupt, Pressure Piping Engrg. Associates, Inc.
R. C. Hawthorne, PT&P US Bellows
R. B. Hinkley, Consultant
R. D. Hookway, Hookway Engineering
T. W. Johnson, ABB Lummus Global, Inc.
D. B. Kadakia, TD Williamson, Inc.
J. C. Luf, Black and Veatch Corp.
W. N. McLean, Newco Valves
R. A. McLeod, General Electric Gas Turbine
R. J. Medvick, Swagelok
J. E. Meyer, Middough Consulting, Inc.
T. M. Miller, Eastman Kodak Co. Materials Laboratory
V. B. Molina III, Air Products and Chemicals, Inc.
R. G. Nichols, Consultant
J. R. Offutt, Chevron Texaco
D. W. Rahoi, CCM 2000
A. P. Rangus, Bechtel
R. W. Rapp, Jr., Consultant
G. C. Reinhardt, II, Team Industries, Inc.
R. A. Sierra, Fluor Daniel
R. J. Silvia, Process Engineers and Constructors, Inc.
A. R. Simmons, Pipe Fabricating and Supply Co.
J. L. Smith, Jacobs Engineering Group
F. W. Tatar, FM Global
Q. N. Truong, Refinery Technology, Inc.
G. E. Woods, Technip USA
R. J. Young, Consultant
C. G. Ziu, Orion Fittings, Inc.
J. T. Wier, *Honorary Member*

Copyright ASME International
Provided by IHS under license with ASME
No reproduction or networking permitted without license from IHS
Not for Resale

B31.3 SUBGROUP ON ACTIVITIES

B. C. Bassett, Consultant
R. K. Broyles, SR Flexonixs, Inc., Pathway Division
G. Burnett, IPEX, Inc.
M. A. Clark, NIBCO, Inc.
R. B. Davis, Ershigs, Inc.
G. Guerra, J. Ray McDermott Engineering
D. A. McGriff, ISCO Industries, LLC
C. Moore, Fibercast
C. Nath, DuPont
J. M. Prawdzik, BP, Carson Business Unit
D. O. Rogell, Solutia, Inc.
K. E. Seil, The Shaw Group

B31.3 INTERNATIONAL REVIEW NETWORK OF EXPERTS

D. Saile, Shell Global Solutions International B. V.
R. W. Temple, Consultant
F. Zezula, BP Exploration

B31 ADMINISTRATIVE COMMITTEE

A. D. Nance, *Chair,* AD Nance Assoc., Inc.
L. E. Hayden, Jr. *Vice Chair,* Consultant
P. D. Stumpf, *Secretary,* The American Society of Mechanical Engineers
K. C. Bodenhamer, Enterprise Products Co.
P. D. Flenner, Flenner Engineering Services
D. M. Fox, Oncor
D. R. Frikken, Becht Engineering Co.
R. W. Haupt, *Ex-Officio Member,* Pressure Piping Engineering Assoc., Inc.
R. R. Hoffmann, Federal Energy Regulatory Commission
B. P. Holbrook, Babcock Power, Inc.
W. B. McGehee, *Ex-Officio Member,* Consultant
E. Michalopoulos, General Engineering and Commercial Co.
R. B. West, State of Iowa

B31 FABRICATION AND EXAMINATION COMMITTEE

P. D. Stumpf, *Secretary,* The American Society of Mechanical Engineers
W. G. Scruggs, DuPont
R. I. Seals, Consultant
R. J. Silvia, Process Engineering & Constructors, Inc.
W. J. Sperko, Sperko Engineering Services, Inc.

B31 MATERIALS TECHNICAL COMMITTEE

M. L. Nayyar, *Chair,* Bechtel Power Corp.
N. Lobo, *Secretary,* The American Society of Mechanical Engineers
P. S. Barham, City Public Services
M. H. Barnes, Sebesta Blomberg & Associates
J. A. Cox, Consultant
R. P. Deubler, BGA LLC
R. A. Grichuk, Fluor Daniel, Inc.
C. L. Henley, Black and Veatch
R. A. Mueller, Dynegy Midstream Services
D. W. Rahoi, CCM 2000
W. V. Richards, Consultant
D. Rogell, Solutia, Inc.
R. A. Schmidt, Trinity-Ladish
J. L. Smith, Foster Wheeler
R. J. Young, Consultant

B31 MECHANICAL DESIGN TECHNICAL COMMITTEE

R. W. Haupt, *Chair,* Pressure Piping Engineering Assoc., Inc.
S. J. Rossi, *Secretary,* The American Society of Mechanical Engineers
G. A. Antaki, Washington Group
C. Becht IV, Becht Engineering Co.
J. P. Breen, John J. McMullen Assoc.
J. P. Ellenberger, Consultant
D. J. Fetzner, BPX Alaska, Inc.
J. A. Graziano, Tennessee Valley Authority
J. D. Hart, SSD, Inc.
B. P. Holbrook, Babcock Power, Inc.
W. J. Koves, UOP LLC
G. Mayers, Anteon Corp.
T. Q. McCawley, TQM Engineering, PC
E. Michalopoulos, General Engineering and Commercial Co.
J. C. Minichiello, Framatome ANP
T. J. O'Grady II, Veco Alaska, Inc.
A. W. Paulin, Paulin Research Group
R. A. Robleto, Robert A. Robleto
M. J. Rosenfeld, Kiefner & Associates, Inc.
G. Stevick, Berkeley Engineering & Research, Inc.
E. A. Wais, Wais and Associates, Inc.
G. E. Woods, Technip USA
E. C. Rodabaugh, *Honorary Member,* Consultant

Copyright ASME International
Provided by IHS under license with ASME
No reproduction or networking permitted without license from IHS
Not for Resale

B31 CONFERENCE GROUP

T. A. Bell, Bonneville Power Admin.
G. Bynog, State of Texas, TDLS-Boiler Division
R. A. Coomes, State of Kentucky, Dept. of Housing/Boiler Section
D. H. Hanrath, Consultant
C. J. Harvey, Alabama Public Service Commission
D. T. Jagger, Ohio Department of Commerce
M. Kotb, Regie du Batiment du Quebec
K. T. Lau, Alberta Boilers Safety Association
R. G. Marini, New Hampshire Public Utilities Commission
I. W. Mault, Manitoba Department of Labour
A. W. Meiring, Fire and Building Boiler and Pressure Vessel Division
R. F. Mullaney, Boiler and Pressure Vessel Safety Branch
P. Sher, State of Connecticut
M. E. Skarda, Department of Labor
D. A. Starr, Nebraska Department of Labor
D. J. Stursma, Iowa Utilities Board
R. P. Sullivan, The National Board of Boiler and Pressure Vessel Inspectors
J. E. Troppman, Division of Labor/State of Colorado Boiler Inspections
C. H. Walters, National Board of Boiler and Pressure Vessel Inspectors
W. A. West, Lighthouse Assistance, Inc.
T. F. Wickham, Rhode Island Department of Labor

B31 NATIONAL INTEREST REVIEW GROUP

American Society of Heating, Refrigeration and Air Conditioning Engineers — H. R. Kornblum
Chemical Manufacturers Association — D. R. Frikken
Copper Development Association — A. Cohen
Ductile Iron Pipe Research Association — T. F. Stroud
Edison Electric Institute — R. L. Williams
International District Heating Association — G. M. Von Bargen
Manufacturers Standardization Society of the Valve and Fittings Industry — R. A. Schmidt
National Association of Plumbing-Heating-Cooling Contractors — R. E. White
National Certified Pipe Welding Bureau — D. Nikpourfard
National Fire Protection Association — T. C. Lemoff
Valve Manufacturers Association — R. A. Handschumacher

Copyright ASME International
Provided by IHS under license with ASME
No reproduction or networking permitted without license from IHS
Not for Resale

(04)

INTRODUCTION

The ASME B31 Code for Pressure Piping consists of a number of individually published Sections, each an American National Standard, under the direction of ASME Committee B31, Code for Pressure Piping.

Rules for each Section reflect the kinds of piping installations considered during its development, as follows:

B31.1 Power Piping: piping typically found in electric power generating stations, in industrial and institutional plants, geothermal heating systems, and central and district heating and cooling systems;

B31.3 Process Piping: piping typically found in petroleum refineries, chemical, pharmaceutical, textile, paper, semiconductor, and cryogenic plants, and related processing plants and terminals;

B31.4 Pipeline Transportation Systems for Liquid Hydrocarbons and Other Liquids: piping transporting products which are predominately liquid between plants and terminals and within terminals, pumping, regulating, and metering stations;

B31.5 Refrigeration Piping: piping for refrigerants and secondary coolants;

B31.8 Gas Transportation and Distribution Piping Systems: piping transporting products which are predominately gas between sources and terminals, including compressor, regulating, and metering stations; gas gathering pipelines;

B31.9 Building Services Piping: piping typically found in industrial, institutional, commercial, and public buildings, and in multi-unit residences, which does not require the range of sizes, pressures, and temperatures covered in B31.1;

B31.11 Slurry Transportation Piping Systems: piping transporting aqueous slurries between plants and terminals and within terminals, pumping, and regulating stations.

This is the B31.3 Process Piping Code Section. Hereafter, in this Introduction and in the text of this Code Section B31.3, where the word *Code* is used without specific identification, it means this Code Section.

It is the owner's responsibility to select the Code Section which most nearly applies to a proposed piping installation. Factors to be considered by the owner include: limitations of the Code Section; jurisdictional requirements; and the applicability of other codes and standards. All applicable requirements of the selected Code Section shall be met. For some installations, more than one Code Section may apply to different parts of the installation. The owner is also responsible for imposing requirements supplementary to those of the Code if necessary to assure safe piping for the proposed installation.

Certain piping within a facility may be subject to other codes and standards, including but not limited to:

ANSI Z223.1 National Fuel Gas Code: piping for fuel gas from the point of delivery to the connection of each fuel utilization device;

NFPA Fire Protection Standards: fire protection systems using water, carbon dioxide, halon, foam, dry chemicals, and wet chemicals;

NFPA 99 Health Care Facilities: medical and laboratory gas systems;

Building and plumbing codes, as applicable, for potable hot and cold water, and for sewer and drain systems.

The Code sets forth engineering requirements deemed necessary for safe design and construction of pressure piping. While safety is the basic consideration, this factor alone will not necessarily govern the final specifications for any piping installation. The designer is cautioned that the Code is not a design handbook; it does not do away with the need for the designer or for competent engineering judgment.

To the greatest possible extent, Code requirements for design are stated in terms of basic design principles and formulas. These are supplemented, as necessary, with specific requirements to assure uniform application of principles and to guide selection and application of piping elements.

Copyright ASME International
Provided by IHS under license with ASME
No reproduction or networking permitted without license from IHS
Not for Resale

The Code prohibits designs and practices known to be unsafe and contains warnings where caution, but not prohibition, is warranted.

This Code Section includes:

(a) references to acceptable material specifications and component standards, including dimensional requirements and pressure–temperature ratings;

(b) requirements for design of components and assemblies, including piping supports;

(c) requirements and data for evaluation and limitation of stresses, reactions, and movements associated with pressure, temperature changes, and other forces;

(d) guidance and limitations on the selection and application of materials, components, and joining methods;

(e) requirements for the fabrication, assembly, and erection of piping; and

(f) requirements for examination, inspection, and testing of piping.

ASME Committee B31 is organized and operates under procedures of The American Society of Mechanical Engineers which have been accredited by the American National Standards Institute. The Committee is a continuing one, and keeps all Code Sections current with new developments in materials, construction, and industrial practice. New editions are published at intervals of two years.

Code users will note that clauses in the Code are not necessarily numbered consecutively. Such discontinuities result from following a common outline, insofar as practical, for all Code Sections. In this way, corresponding material is correspondingly numbered in most Code Sections, thus facilitating reference by those who have occasion to use more than one Section.

It is intended that this Edition of Code Section B31.3 not be retroactive. Unless agreement is specifically made between contracting parties to use another issue, or the regulatory body having jurisdiction imposes the use of another issue, the latest Edition issued at least 6 months prior to the original contract date for the first phase of activity covering a piping installation shall be the governing document for all design, materials, fabrication, erection, examination, and testing for the piping until the completion of the work and initial operation.

Users of this Code are cautioned against making use of Code revisions without assurance that they are acceptable to the proper authorities in the jurisdiction where the piping is to be installed.

The B31 Committee has established an orderly procedure to consider requests for interpretation and revision of Code requirements. To receive consideration, such request must be in writing and must give full particulars in accordance with Appendix Z.

The approved reply to an inquiry will be sent directly to the inquirer. In addition, the question and reply will be published as part of an Interpretation supplement.

A Case is the prescribed form of reply when study indicates that the Code wording needs clarification, or when the reply modifies existing requirements of the Code or grants permission to use new materials or alternative constructions. Proposed Cases are published in *Mechanical Engineering* for public review. In addition, the Case will be published as part of a Case supplement.

A Case is normally issued for a limited period. If at the end of that period it has been incorporated in the Code, or if no further use of its provisions is anticipated, it will be allowed to expire. Otherwise, it will be renewed for a limited period.

A request for revision of the Code will be placed on the Committee's agenda. Further information or active participation on the part of the proponent may be requested during consideration of a proposed revision.

Materials ordinarily are listed in the Stress Tables only when sufficient usage in piping within the scope of the Code has been shown. Requests for listing shall include evidence of satisfactory usage and specific data to permit establishment of allowable stresses, maximum and minimum temperature limits, and other restrictions. Additional criteria can be found in the guidelines for addition of new materials in the ASME Boiler and Pressure Vessel Code, Section II and Section VIII, Division 1, Appendix B. (To develop usage and gain experience, unlisted materials may be used in accordance with para. 323.1.2.) Metric versions of Tables A-1 and A-2 are in the course of preparation. Please refer to the B31.3 Process Piping Web pages at http://cstools.asme.org/csconnect/CommitteePages.cfm.

--`,,```,,,,````-`-`,,`,,`,`,,`---

Copyright ASME International
Provided by IHS under license with ASME
No reproduction or networking permitted without license from IHS

Not for Resale

SUMMARY OF CHANGES

Changes given below are identified on the pages by a margin note, **(04),** placed next to the affected area.

Page	*Location*	*Change*
xvi, xvii	Introduction	Last paragraph revised
2, 3	300.2	(1) First paragraph revised (2) Footnote 3 added (3) Definition of *braze welding* deleted
8	Table 300.4	(1) Listings for Appendices P and S added (2) Notes (4) and (5) redesignated as (6) and (4), respectively, and new Note (5) added
10	301.5.2	Revised
	301.5.3	Revised
11	302.2.2	Last sentence added
12, 13	302.3.2(a)(3)	Revised
14, 16, 17	302.3.5	Revised in its entirety
	Fig. 302.3.5	Table 302.3.5 replaced
	302.3.6(a)	Revised
	303	Revised
18	304.1.1(b)	Nomenclature for W added
	304.1.2(a)	Equation (3b) revised
	304.2.1	Equation (3c) revised
19	304.2.2	Revised
	304.2.3	(1) Equations (4a), (4b), and (4c) revised (2) In subparagraph (d), nomenclature for W added
20, 22	304.3.3(a)	Nomenclature for t revised
24	304.3.4(f)(3)	Equation (12) corrected by errata
25	304.4.1(b)	Nomenclature for S revised
26	304.5.1(b)	Nomenclature for S_f revised
	304.5.3	Nomenclature for W added
28, 29	306.2.1	(1) Existing text designated as subparagraph (a) (2) Subparagraph (b) added
	306.4.1(c)	Revised
	306.4.2(a)	Revised

Copyright ASME International
Provided by IHS under license with ASME
No reproduction or networking permitted without license from IHS
Not for Resale

Page	*Location*	*Change*
33, 34	319.1.2	Last paragraph revised
44	Table 323.2.2	Note (3) corrected by errata to read 0.3
48	Table 323.3.1	Item A-5(a) revised
51	323.5	Revised
53, 54	Table 326.1	Revised in its entirety
57	328.4.2(b)(6)	Added
71	Table 341.3.2	Under Weld Imperfection, seventh entry corrected by errata to read slag and Note (5)
72	Criterion Value Notes for Table 341.3.2	Last line deleted
77	345.3.1	Revised
78	345.4.1	Revised
82	A302.3.4(a)	Revised
85	A314.2.1	Subparagraphs (b) and (d) revised
89	A323.4.2(a)(1)	Revised
90	Table A323.4.3	Note (1) [formerly Note (2)] corrected by errata to read A326.4
92	Table A326.1	(1) For AWWA C950, asterisk and corresponding Note deleted (2) ASTM F 1498 added
94	A328.5.3(a)	Revised
108	MA341.1	Added
	MA341.2	Added
	MA345	Revised in its entirety
110, 111	K302.3.1(d)	Revised
	K302.3.2	Revised in its entirety
	K302.3.5(c)	Revised
112	K302.3.6(a)	Revised
113	K304.1.2	(1) Nomenclature relocated by errata from end of K304.1.1(b) (2) Footnote (4) revised
114, 115	K304.8	Revised in its entirety
123	K328.2.1(d)	Revised
	K328.2.5(a)	Revised
124	Table K326.1	Asterisks and corresponding Note deleted
125	K330	K330 through K330.1.1 revised
130	K344.6.2	First paragraph revised
	K345.2.1(a)	Footnote 10 revised

Copyright ASME International
Provided by IHS under license with ASME
No reproduction or networking permitted without license from IHS
Not for Resale

Page	*Location*	*Change*
135	Specification Index for Appendix A	ASTM B 423, B 424, and B 425 added
154	Table A-1	For both ASTM A 202 entries, Material corrected by errata to read Cr–Mn–Si
162	Table A-1	(1) For ASTM A 451 Grade CPE20N, Material corrected by errata to read 24Cr–9Ni–N (2) For last entry, Grade corrected by errata to read 430
164	Table A-1	Under Forgings and Fittings, third Grade entry corrected by errata to read WP304L
174, 175	Table A-1	ASTM B 423 and B 705 added
176, 177	Table A-1	ASTM B 424 added
178	Table A-1	For fourth ASTM B 564, UNS No. corrected by errata to read N08811
180, 181	Table A-1	ASTM B 366 N08825, B 564 N08825, and B 425 N08825 added
194	Table A-2	Under Stainless Steel, fifth through eighth Material entries and third Size Range entry corrected by errata
229	Table D300	Note (11) corrected by errata to read $T_c \geq 1.5\overline{T}$
230–234	Appendix E	(1) Reference standards updated (2) ICBO address deleted
236	F300	Revised
238, 239	F323.4(b)(6)	NACE references in text and footnote 1 corrected by errata to read MR0175 and RP0472
	F323.4(c)(2)	NACE reference in footnote 1 and text corrected by errata to read RP0170
	F345.4.1	Added
247–256	Appendix J	(1) Nomenclature for f_m and P_j added (2) Nomenclature for R_Y updated (3) Nomenclature for S revised (4) Nomenclature for S_{yt}, T_i, and W added
257	Specification Index for Appendix K	Title of ASTM A 210 revised
258	Notes for Appendix K Tables	Note (21) added
260, 261	Table K-1	For eight API 5L entries, Note (21) references added and stresses for 200°F through 400°F deleted

Copyright ASME International
Provided by IHS under license with ASME
No reproduction or networking permitted without license from IHS
Not for Resale

Page	*Location*	*Change*
262, 263	Table K-1	(1) For 9Ni A 333 and A 334, stress line revised (2) For 9Ni A 420, Specified Min. Tensile Strength and stress line revised (3) Under Stainless Steel Pipes and Tubes, all four stress lines and first, fifth, and sixth Grades on p. 263 corrected by errata
269	Table K-1	(1) Under Pipes and Tubes, for last ASTM B 165, double bar at 700°F deleted by errata (2) Under Forgings and Fittings, ASTM B 564 N10276 added by errata
276	Fig. M300	In Col. 5's second box, second temperature corrected by errata to read 186°C
277, 278	Appendix P	Added
280–284	Appendix S	Added
286, 287	V304	Added
288	Appendix X	Second sentence below title deleted
289–291	X302.1.2(c)	Revised
	X302.1.2(e)	Footnote 1 revised
	X302.1.3(c)	Revised
	Fig. X302.1.3	Revised
	X302.2.2(b)	Revised

NOTE: The interpretations to ASME B31.3 issued between April 1, 2001 and October 31, 2003 follow the last page of this edition as a separate supplement, Interpretations No. 19.

Copyright ASME International
Provided by IHS under license with ASME
No reproduction or networking permitted without license from IHS
Not for Resale

Copyright ASME International
Provided by IHS under license with ASME
No reproduction or networking permitted without license from IHS
Not for Resale

Chapter I
Scope and Definitions

300 GENERAL STATEMENTS

(a) Identification. This Process Piping Code is a Section of the American Society of Mechanical Engineers Code for Pressure Piping, ASME B31, an American National Standard. It is published as a separate document for convenience of Code users.

(b) Responsibilities

(1) Owner. The owner of a piping installation shall have overall responsibility for compliance with this Code, and for establishing the requirements for design, construction, examination, inspection, and testing which will govern the entire fluid handling or process installation of which the piping is a part. The owner is also responsible for designating piping in certain fluid services and for determining if a specific Quality System is to be employed. [See paras. 300(d)(4), (d)(5), (e), and Appendix Q.]

(2) Designer. The designer is responsible to the owner for assurance that the engineering design of piping complies with the requirements of this Code and with any additional requirements established by the owner.

(3) Manufacturer, Fabricator, and Erector. The manufacturer, fabricator, and erector of piping are responsible for providing materials, components, and workmanship in compliance with the requirements of this Code and of the engineering design.

(4) Owner's Inspector. The owner's Inspector (see para. 340) is responsible to the owner for ensuring that the requirements of this Code for inspection, examination, and testing are met. If a Quality System is specified by the owner to be employed, the owner's inspector is responsible for verifying that it is implemented.

(c) Intent of the Code

(1) It is the intent of this Code to set forth engineering requirements deemed necessary for safe design and construction of piping installations.

(2) This Code is not intended to apply to the operation, examination, inspection, testing, maintenance, or repair of piping that has been placed in service. The provisions of this Code may optionally be applied for those purposes, although other considerations may also be necessary.

(3) Engineering requirements of this Code, while considered necessary and adequate for safe design, generally employ a simplified approach to the subject. A designer capable of applying a more rigorous analysis shall have the latitude to do so; however, the approach must be documented in the engineering design and its validity accepted by the owner. The approach used shall provide details of design, construction, examination, inspection, and testing for the design conditions of para. 301, with calculations consistent with the design criteria of this Code.

(4) Piping elements should, insofar as practicable, conform to the specifications and standards listed in this Code. Piping elements neither specifically approved nor specifically prohibited by this Code may be used provided they are qualified for use as set forth in applicable Chapters of this Code.

(5) The engineering design shall specify any unusual requirements for a particular service. Where service requirements necessitate measures beyond those required by this Code, such measures shall be specified by the engineering design. Where so specified, the Code requires that they be accomplished.

(6) Compatibility of materials with the service and hazards from instability of contained fluids are not within the scope of this Code. See para. F323.

(d) Determining Code Requirements

(1) Code requirements for design and construction include fluid service requirements, which affect selection and application of materials, components, and joints. Fluid service requirements include prohibitions, limitations, and conditions, such as temperature limits or a requirement for safeguarding (see para. 300.2 and Appendix G). Code requirements for a piping system are the most restrictive of those which apply to any of its elements.

(2) For metallic piping not in Category M or high pressure fluid service, Code requirements are found in Chapters I through VI (the base Code), and fluid service requirements are found in

(a) Chapter III for materials

(b) Chapter II, Part 3, for components

(c) Chapter II, Part 4, for joints

(3) For nonmetallic piping and piping lined with nonmetals, all requirements are found in Chapter VII. (Paragraph designations begin with "A.")

(4) For piping in a fluid service designated by the owner as Category M (see para. 300.2 and Appendix M), all requirements are found in Chapter VIII. (Paragraph designations begin with "M.")

(5) For piping in a fluid service designated by the owner as Category D (see para. 300.2 and Appendix M),

Copyright ASME International
Provided by IHS under license with ASME
No reproduction or networking permitted without license from IHS
Not for Resale

piping elements restricted to Category D Fluid Service in Chapters I through VII, as well as elements suitable for other fluid services, may be used.

(6) Metallic piping elements suitable for Normal Fluid Service in Chapters I through VI may also be used under severe cyclic conditions unless a specific requirement for severe cyclic conditions is stated.

(e) High Pressure Piping. Chapter IX provides alternative rules for design and construction of piping designated by the owner as being in High Pressure Fluid Service.

(1) These rules apply only when specified by the owner, and only as a whole, not in part.

(2) Chapter IX rules do not provide for Category M Fluid Service. See para. K300.1.4.

(3) Paragraph designations begin with "K."

(f) Appendices. Appendices of this Code contain Code requirements, supplementary guidance, or other information. See para. 300.4 for a description of the status of each Appendix.

300.1 Scope

Rules for the Process Piping Code Section B31.3[1] have been developed considering piping typically found in petroleum refineries; chemical, pharmaceutical, textile, paper, semiconductor, and cryogenic plants; and related processing plants and terminals.

300.1.1 Content and Coverage

(a) This Code prescribes requirements for materials and components, design, fabrication, assembly, erection, examination, inspection, and testing of piping.

(b) This Code applies to piping for all fluids, including

(1) raw, intermediate, and finished chemicals
(2) petroleum products
(3) gas, steam, air, and water
(4) fluidized solids
(5) refrigerants
(6) cryogenic fluids

(c) See Fig. 300.1.1 for a diagram illustrating the application of B31.3 piping at equipment. The joint connecting piping to equipment is within the scope of B31.3.

300.1.2 Packaged Equipment Piping. Also included within the scope of this Code is piping which interconnects pieces or stages within a packaged equipment assembly.

300.1.3 Exclusions. This Code excludes the following:

(a) piping systems designed for internal gage pressures at or above zero but less than 105 kPa (15 psi), provided the fluid handled is nonflammable, nontoxic, and not damaging to human tissues as defined in 300.2, and its design temperature is from −29°C (−20°F) through 186°C (366°F)

(b) power boilers in accordance with BPV Code[2] Section I and boiler external piping which is required to conform to B31.1

(c) tubes, tube headers, crossovers, and manifolds of fired heaters, which are internal to the heater enclosure

(d) pressure vessels, heat exchangers, pumps, compressors, and other fluid handling or processing equipment, including internal piping and connections for external piping

300.2 Definitions (04)

Some of the terms relating to piping are defined below. For welding, brazing, and soldering terms not shown here, definitions in accordance with AWS Standard A3.0[3] apply.

air-hardened steel: a steel that hardens during cooling in air from a temperature above its transformation range.

anneal heat treatment: see *heat treatment*.

arc cutting: a group of cutting processes wherein the severing or removing of metals is effected by melting with the heat of an arc between an electrode and the base metal. (Includes carbon-arc cutting, metal-arc cutting, gas metal-arc cutting, gas tungsten-arc cutting, plasma-arc cutting, and air carbon-arc cutting.) See also *oxygen-arc cutting*.

arc welding (AW): a group of welding processes which produces coalescence of metals by heating them with an arc or arcs, with or without the application of pressure and with or without the use of filler metal.

assembly: the joining together of two or more piping components by bolting, welding, bonding, screwing, brazing, soldering, cementing, or use of packing devices as specified by the engineering design.

automatic welding: welding with equipment which performs the welding operation without adjustment of the controls by an operator. The equipment may or may not perform the loading and unloading of the work.

backing filler metal: see *consumable insert*.

backing ring: material in the form of a ring used to support molten weld metal.

balanced piping system: see para. 319.2.2(a).

[1] B31 references here and elsewhere in this Code are to the ASME B31 Code for Pressure Piping and its various Sections, which are identified and briefly described in the Introduction.

[2] BPV Code references here and elsewhere in this Code are to the ASME Boiler and Pressure Vessel Code and its various Sections as follows:
Section I, Power Boilers
Section II, Materials, Part D
Section V, Nondestructive Examination
Section VIII, Pressure Vessels, Divisions 1 and 2
Section IX, Welding and Brazing Qualifications

[3] AWS A3.0, Standard Welding Terms and Definitions, Including Terms for Adhesive Bonding, Brazing, Soldering, Thermal Coupling and Thermal Spraying

Copyright ASME International
Provided by IHS under license with ASME
No reproduction or networking permitted without license from IHS
Not for Resale

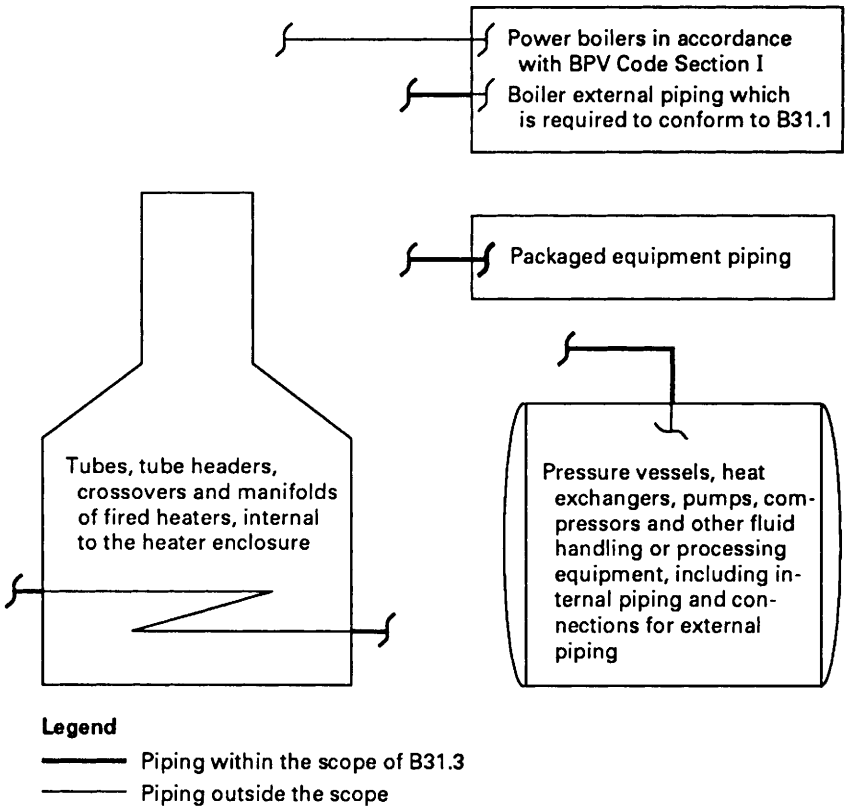

GENERAL NOTE: The means by which piping is attached to equipment is within the scope of the applicable piping code.

Fig. 300.1.1 Diagram Illustrating Application of B31.3 Piping at Equipment

base material: the material to be brazed, soldered, welded, or otherwise fused.

basic allowable stress: see *stress terms frequently used*.

bolt design stress: see *stress terms frequently used*.

bonded joint: a permanent joint in nonmetallic piping made by one of the following methods:

(a) adhesive joint: a joint made by applying an adhesive to the surfaces to be joined and pressing them together

(b) butt-and-wrapped joint: a joint made by butting together the joining surfaces and wrapping the joint with plies of reinforcing fabric saturated with resin

(c) heat fusion joint: a joint made by heating the surfaces to be joined and pressing them together to achieve fusion

(d) hot gas welded joint: a joint made by simultaneously heating the surfaces to be joined and a filler material with a stream of hot air or hot inert gas, then pressing the surfaces together and applying the filler material to achieve fusion

(e) solvent cemented joint: a joint made by using a solvent cement to soften the surfaces to be joined and pressing them together

(f) electrofusion joint: a joint made by heating the surfaces to be joined using an electrical resistance wire coil, which remains embedded in the joint.

bonder: one who performs a manual or semiautomatic bonding operation.

bonding operator: one who operates machine or automatic bonding equipment.

bonding procedure: the detailed methods and practices involved in the production of a bonded joint.

bonding procedure specification (BPS): the document which lists the parameters to be used in the construction of bonded joints in accordance with the requirements of this Code.

branch connection fitting: an integrally reinforced fitting welded to a run pipe and connected to a branch pipe by a buttwelding, socket welding, threaded, or flanged joint; includes a branch outlet fitting conforming to MSS SP-97.

brazing: a metal joining process wherein coalescence is produced by use of a nonferrous filler metal having a melting point above 427°C (800°F), but lower than that

Copyright ASME International
Provided by IHS under license with ASME
No reproduction or networking permitted without license from IHS
Not for Resale

of the base metals being joined. The filler metal is distributed between the closely fitted surfaces of the joint by capillary attraction.

butt joint: a joint between two members aligned approximately in the same plane.

Category D: see *fluid service*.

Category M: see *fluid service*.

caulked joint: a joint in which suitable material (or materials) is either poured or compressed by the use of tools into the annular space between a bell (or hub) and spigot (or plain end), thus comprising the joint seal.

chemical plant: an industrial plant for the manufacture or processing of chemicals, or of raw materials or intermediates for such chemicals. A chemical plant may include supporting and service facilities, such as storage, utility, and waste treatment units.

cold spring: see para. 319.2.4.

connections for external piping: those integral parts of individual pieces of equipment which are designed for attachment of external piping.

consumable insert: preplaced filler metal which is completely fused into the root of the joint and becomes part of the weld.

damaging to human tissues: for the purposes of this Code, this phrase describes a fluid service in which exposure to the fluid, caused by leakage under expected operating conditions, can harm skin, eyes, or exposed mucous membranes so that irreversible damage may result unless prompt restorative measures are taken. (Restorative measures may include flushing with water, administration of antidotes, or medication.)

design minimum temperature: see para. 301.3.1.

design pressure: see para. 301.2.

design temperature: see para. 301.3.

designer: the person or organization in responsible charge of the engineering design.

displacement stress range: see para. 319.2.3.

elements: see *piping elements*.

engineering design: the detailed design governing a piping system, developed from process and mechanical requirements, conforming to Code requirements, and including all necessary specifications, drawings, and supporting documents.

equipment connection: see *connections for external piping*.

erection: the complete installation of a piping system in the locations and on the supports designated by the engineering design including any field assembly, fabrication, examination, inspection, and testing of the system as required by this Code.

examination, examiner: see paras. 341.1 and 341.2.

examination, types of: see para. 344.1.3 for the following:

(a) 100% examination
(b) random examination
(c) spot examination
(d) random spot examination

extruded outlet header: see para. 304.3.4.

fabrication: the preparation of piping for assembly, including cutting, threading, grooving, forming, bending, and joining of components into subassemblies. Fabrication may be performed in the shop or in the field.

face of weld: the exposed surface of a weld on the side from which the welding was done.

filler material: the material to be added in making metallic or nonmetallic joints.

fillet weld: a weld of approximately triangular cross section joining two surfaces approximately at right angles to each other in a lap joint, tee joint, or corner joint. (See also *size of weld* and *throat of a fillet weld*.)

flammable: for the purposes of this Code, describes a fluid which under ambient or expected operating conditions is a vapor or produces vapors that can be ignited and continue to burn in air. The term thus may apply, depending on service conditions, to fluids defined for other purposes as *flammable* or *combustible.*

fluid service: a general term concerning the application of a piping system, considering the combination of fluid properties, operating conditions, and other factors which establish the basis for design of the piping system. See Appendix M.

(a) Category D Fluid Service: a fluid service in which all the following apply:

(1) the fluid handled is nonflammable, nontoxic, and not damaging to human tissues as defined in para. 300.2

(2) the design gage pressure does not exceed 1035 kPa (150 psi)

(3) the design temperature is from −29°C (−20°F) through 186°C (366°F)

(b) Category M Fluid Service: a fluid service in which the potential for personnel exposure is judged to be significant and in which a single exposure to a very small quantity of a toxic fluid, caused by leakage, can produce serious irreversible harm to persons on breathing or bodily contact, even when prompt restorative measures are taken

(c) High Pressure Fluid Service: a fluid service for which the owner specifies the use of Chapter IX for piping design and construction; see also para. K300

(d) Normal Fluid Service: a fluid service pertaining to most piping covered by this Code, i.e., not subject to the rules for Category D, Category M, or High Pressure Fluid Service

full fillet weld: a fillet weld whose size is equal to the thickness of the thinner member joined.

Copyright ASME International
Provided by IHS under license with ASME
No reproduction or networking permitted without license from IHS
Not for Resale

fusion: the melting together of filler material and base material, or of base material only, which results in coalescence.

gas metal-arc welding (GMAW): an arc-welding process which produces coalescence of metals by heating them with an arc between a continuous filler metal (consumable) electrode and the work. Shielding is obtained entirely from an externally supplied gas, or gas mixture. Some variations of this process are called MIG or CO_2 welding (nonpreferred terms).

gas tungsten-arc welding (GTAW): an arc-welding process which produces coalescence of metals by heating them with an arc between a single tungsten (nonconsumable) electrode and the work. Shielding is obtained from a gas or gas mixture. Pressure may or may not be used and filler metal may or may not be used. (This process has sometimes been called TIG welding.)

gas welding: a group of welding processes wherein coalescence is produced by heating with a gas flame or flames, with or without the application of pressure, and with or without the use of filler material.

groove weld: a weld made in the groove between two members to be joined.

heat affected zone: that portion of the base material which has not been melted, but whose mechanical properties or microstructure have been altered by the heat of welding, brazing, soldering, forming, or cutting.

heat treatment: terms used to describe various types and processes of heat treatment (sometimes called postweld heat treatment) are defined as follows:

(a) annealing: heating to and holding at a suitable temperature and then cooling at a suitable rate for such purposes as: reducing hardness, improving machinability, facilitating cold working, producing a desired microstructure, or obtaining desired mechanical, physical, or other properties

(b) normalizing: a process in which a ferrous metal is heated to a suitable temperature above the transformation range and is subsequently cooled in still air at room temperature

(c) preheating: see *preheating* (separate term)

(d) quenching: rapid cooling of a heated metal

(e) recommended or required heat treatment: the application of heat to a metal section subsequent to a cutting, forming, or welding operation, as provided in para. 331

(f) solution heat treatment: heating an alloy to a suitable temperature, holding at that temperature long enough to allow one or more constituents to enter into solid solution, and then cooling rapidly enough to hold the constituents in solution

(g) stress-relief: uniform heating of a structure or portion thereof to a sufficient temperature to relieve the major portion of the residual stresses, followed by uniform cooling slowly enough to minimize development of new residual stresses

(h) tempering: reheating a hardened metal to a temperature below the transformation range to improve toughness

(i) transformation range: a temperature range in which a phase change is initiated and completed

(j) transformation temperature: a temperature at which a phase change occurs

High Pressure Fluid Service: see *fluid service*.

indication, linear: in magnetic particle, liquid penetrant or similar examination, a closed surface area marking or denoting a discontinuity requiring evaluation, whose longest dimension is at least three times the width of the indication.

indication, rounded: in magnetic particle, liquid penetrant or similar examination, a closed surface area marking or denoting a discontinuity requiring evaluation, whose longest dimension is less than three times the width of the indication.

in-process examination: see para. 344.7.

inspection, Inspector: see para. 340.

joint design: the joint geometry together with the required dimensions of the welded joint.

listed: for the purposes of this Code, describes a material or component which conforms to a specification in Appendix A, Appendix B, or Appendix K or to a standard in Table 326.1, A326.1, or K326.1.

manual welding: a welding operation performed and controlled completely by hand.

may: a term which indicates that a provision is neither required nor prohibited.

mechanical joint: a joint for the purpose of mechanical strength or leak resistance, or both, in which the mechanical strength is developed by threaded, grooved, rolled, flared, or flanged pipe ends; or by bolts, pins, toggles, or rings; and the leak resistance is developed by threads and compounds, gaskets, rolled ends, caulking, or machined and mated surfaces.

miter: two or more straight sections of pipe matched and joined in a plane bisecting the angle of junction so as to produce a change in direction.

nominal: a numerical identification of dimension, capacity, rating, or other characteristic used as a designation, not as an exact measurement.

NPS: nominal pipe size (followed, when appropriate, by the specific size designation number without an inch symbol).

Normal Fluid Service: see *fluid service*.

normalizing: see *heat treatment*.

notch-sensitive: describes a metal subject to reduction in strength in the presence of stress concentration. The degree of notch sensitivity is usually expressed as the

Copyright ASME International
Provided by IHS under license with ASME
No reproduction or networking permitted without license from IHS Not for Resale

strength determined in a notched specimen divided by the strength determined in an unnotched specimen, and can be obtained from either static or dynamic tests.

oxygen-arc cutting (OAC): an oxygen-cutting process that uses an arc between the workpiece and a consumable electrode, through which oxygen is directed to the workpiece. For oxidation-resistant metals, a chemical flux or metal powder is used to facilitate the reaction.

oxygen cutting (OC): a group of thermal cutting processes that severs or removes metal by means of the chemical reaction between oxygen and the base metal at elevated temperature. The necessary temperature is maintained by the heat from an arc, an oxyfuel gas flame, or other source.

oxygen gouging: thermal gouging that uses an oxygen cutting process variation to form a bevel or groove.

packaged equipment: an assembly of individual pieces or stages of equipment, complete with inter-connecting piping and connections for external piping. The assembly may be mounted on a skid or other structure prior to delivery.

petroleum refinery: an industrial plant for processing or handling of petroleum and products derived directly from petroleum. Such a plant may be an individual gasoline recovery plant, a treating plant, a gas processing plant (including liquefaction), or an integrated refinery having various process units and attendant facilities.

pipe: a pressure-tight cylinder used to convey a fluid or to transmit a fluid pressure, ordinarily designated *pipe* in applicable material specifications. Materials designated *tube* or *tubing* in the specifications are treated as pipe when intended for pressure service. Types of pipe, according to the method of manufacture, are defined as follows:

(a) electric resistance-welded pipe: pipe produced in individual lengths or in continuous lengths from coiled skelp and subsequently cut into individual lengths, having a longitudinal butt joint wherein coalescence is produced by the heat obtained from resistance of the pipe to the flow of electric current in a circuit of which the pipe is a part, and by the application of pressure.

(b) furnace butt welded pipe, continuous welded: pipe produced in continuous lengths from coiled skelp and subsequently cut into individual lengths, having its longitudinal butt joint forge welded by the mechanical pressure developed in passing the hot-formed and edge-heated skelp through a set of round pass welding rolls.

(c) electric-fusion welded pipe: pipe having a longitudinal butt joint wherein coalescence is produced in the preformed tube by manual or automatic electric-arc welding. The weld may be single (welded from one side) or double (welded from inside and outside) and may be made with or without the addition of filler metal.

(d) double submerged-arc welded pipe: pipe having a longitudinal butt joint produced by at least two passes, one of which is on the inside of the pipe. Coalescence is produced by heating with an electric arc or arcs between the bare metal electrode or electrodes and the work. The welding is shielded by a blanket of granular fusible material on the work. Pressure is not used and filler metal for the inside and outside welds is obtained from the electrode or electrodes.

(e) seamless pipe: pipe produced by piercing a billet followed by rolling or drawing, or both.

(f) spiral welded pipe: pipe having a helical seam with either a butt, lap, or lock-seam joint which is welded using either an electrical resistance, electric fusion or double-submerged arc welding process.

pipe-supporting elements: pipe-supporting elements consist of fixtures and structural attachments as follows:

(a) fixtures: fixtures include elements which transfer the load from the pipe or structural attachment to the supporting structure or equipment. They include hanging type fixtures, such as hanger rods, spring hangers, sway braces, counterweights, turnbuckles, struts, chains, guides, and anchors; and bearing type fixtures, such as saddles, bases, rollers, brackets, and sliding supports.

(b) structural attachments: structural attachments include elements which are welded, bolted, or clamped to the pipe, such as clips, lugs, rings, clamps, clevises, straps, and skirts.

piping: assemblies of piping components used to convey, distribute, mix, separate, discharge, meter, control, or snub fluid flows. Piping also includes pipe-supporting elements, but does not include support structures, such as building frames, bents, foundations, or any equipment excluded from this Code (see para. 300.1.3).

piping components: mechanical elements suitable for joining or assembly into pressure-tight fluid-containing piping systems. Components include pipe, tubing, fittings, flanges, gaskets, bolting, valves, and devices such as expansion joints, flexible joints, pressure hoses, traps, strainers, in-line portions of instruments, and separators.

piping elements: any material or work required to plan and install a piping system. Elements of piping include design specifications, materials, components, supports, fabrication, examination, inspection, and testing.

piping installation: designed piping systems to which a selected Code Edition and Addenda apply.

piping system: interconnected piping subject to the same set or sets of design conditions.

plasma arc cutting (PAC): an arc cutting process that uses a constricted arc and removes molten metal with a high velocity jet of ionized gas issuing from the constricting orifice.

postweld heat treatment: see *heat treatment*.

preheating: the application of heat to the base material immediately before or during a forming, welding, or cutting process. See para. 330.

Copyright ASME International
Provided by IHS under license with ASME
No reproduction or networking permitted without license from IHS
Not for Resale

procedure qualification record (PQR): a document listing all pertinent data, including the essential variables employed and the test results, used in qualifying the procedure specification.

process unit: an area whose boundaries are designated by the engineering design within which reactions, separations, and other processes are carried out. Examples of installations which are *not* classified as process units are loading areas or terminals, bulk plants, compounding plants, and tank farms and storage yards.

quench annealing: see *solution heat treatment* under *heat treatment*.

quenching: see *heat treatment*.

reinforcement: see paras. 304.3 and A304.3. See also *weld reinforcement.*

root opening: the separation between the members to be joined, at the root of the joint.

safeguarding: provision of protective measures of the types outlined in Appendix G, where deemed necessary. See Appendix G for detailed discussion.

seal bond: a bond intended primarily to provide joint tightness against leakage in nonmetallic piping.

seal weld: a weld intended primarily to provide joint tightness against leakage in metallic piping.

semiautomatic arc welding: arc welding with equipment which controls only the filler metal feed. The advance of the welding is manually controlled.

severe cyclic conditions: conditions applying to specific piping components or joints in which S_E computed in accordance with para. 319.4.4 exceeds $0.8S_A$ (as defined in para. 302.3.5), and the equivalent number of cycles (N in para. 302.3.5) exceeds 7000; or other conditions which the designer determines will produce an equivalent effect.

shall: a term which indicates that a provision is a Code requirement.

shielded metal-arc welding (SMAW): an arc welding process which produces coalescence of metals by heating them with an arc between a covered metal electrode and the work. Shielding is obtained from decomposition of the electrode covering. Pressure is not used and filler metal is obtained from the electrode.

should: a term which indicates that a provision is recommended as good practice but is not a Code requirement

size of weld:

(a) fillet weld: the leg lengths (the leg length for equal-leg welds) of the sides, adjoining the members welded, of the largest triangle that can be inscribed within the weld cross section. For welds between perpendicular members, the definitions in Fig. 328.5.2A apply.

NOTE: When the angle between members exceeds 105 deg, size is of less significance than effective throat (see also *throat of a fillet weld*).

(b) groove weld: the joint penetration (depth of bevel plus the root penetration when specified). The size of a groove weld and its effective throat are the same.

slag inclusion: nonmetallic solid material entrapped in weld metal or between weld metal and base metal.

soldering: a metal joining process wherein coalescence is produced by heating to suitable temperatures and by using a nonferrous alloy fusible at temperatures below 427°C (800°F) and having a melting point below that of the base metals being joined. The filler metal is distributed between closely fitted surfaces of the joint by capillary attraction. In general, solders are lead-tin alloys and may contain antimony, bismuth, and other elements.

solution heat treatment: see *heat treatment*.

stress ratio: see Fig. 323.2.2B.

stress relief: see *heat treatment*.

stress terms frequently used:

(a) basic allowable stress: this term, symbol S, represents the stress value for any material determined by the appropriate stress basis in para. 302.3.2

(b) bolt design stress: this term represents the design stress used to determine the required cross-sectional area of bolts in a bolted joint

(c) hydrostatic design basis: selected properties of plastic piping materials to be used in accordance with ASTM D 2837 or D 2992 to determine the HDS [see (d) below] for the material

(d) hydrostatic design stress (HDS): the maximum continuous stress due to internal pressure to be used in the design of plastic piping, determined from the hydrostatic design basis by use of a service (design) factor

submerged arc welding (SAW): an arc welding process which produces coalescence of metals by heating them with an arc or arcs between a bare metal electrode or electrodes and the work. The arc is shielded by a blanket of granular, fusible material on the work. Pressure is not used and filler metal is obtained from the electrode and sometimes from a supplemental source (welding rod, flux, or metal granules).

tack weld: a weld made to hold parts of a weldment in proper alignment until the final welds are made.

tempering: see *heat treatment*.

thermoplastic: a plastic which is capable of being repeatedly softened by increase of temperature and hardened by decrease of temperature.

thermosetting resin: a resin capable of being changed into a substantially infusible or insoluble product when cured at room temperature, or by application of heat, or by chemical means.

throat of a fillet weld:

(a) theoretical throat: the perpendicular distance from the hypotenuse of the largest right triangle that can be inscribed in the weld cross section to the root of the joint

--`,,```,,,,````-`-`,,`,,`,`,,`---
Copyright ASME International
Provided by IHS under license with ASME
No reproduction or networking permitted without license from IHS
Not for Resale

(04)

Table 300.4 Status of Appendices in B31.3

Appendix	Title	Status
A	Stress Tables for Metallic Piping and Bolting Materials	Requirements
B	Stress Tables and Allowable Pressure Tables for Nonmetals	Requirements
C	Physical Properties of Piping Materials	Requirements (1)
D	Flexibility and Stress Intensification Factors	Requirements (1)
E	Reference Standards	Requirements
F	Precautionary Considerations	Guidance (2)
G	Safeguarding	Guidance (2)
H	Sample Calculations for Branch Reinforcement	Guidance
J	Nomenclature	Information
K	Allowable Stress for High Pressure Piping	Requirements (3)
L	Aluminum Alloy Pipe Flanges	Specification (4)
M	Guide to Classifying Fluid Services	Guidance (2)
P	Alternative Rules for Evaluating Stress Range	Requirements (5)
Q	Quality System Program	Guidance (2)
S	Piping System Stress Analysis Examples	Guidance (2)
V	Allowable Variations in Elevated Temperature Service	Guidance (2)
X	Metallic Bellows Expansion Joints	Requirements
Z	Preparation of Technical Inquiries	Requirements (6)

NOTES:
(1) Contains default requirements, to be used unless more directly applicable data are available.
(2) Contains no requirements but Code user is responsible for considering applicable items.
(3) Contains requirements applicable only when use of Chapter IX is specified.
(4) Contains pressure-temperature ratings, materials, dimensions, and markings of forged aluminum alloy flanges.
(5) Contains alternative requirements.
(6) Contains administrative requirements.

(b) actual throat: the shortest distance from the root of a fillet weld to its face

(c) effective throat: the minimum distance, minus any reinforcement (convexity), between the weld root and the face of a fillet weld

toe of weld: the junction between the face of a weld and the base material.

tube: see *pipe*.

tungsten electrode: a nonfiller-metal electrode used in arc welding or cutting, made principally of tungsten.

unbalanced piping system: see para. 319.2.2(b).

undercut: a groove melted into the base material adjacent to the toe or root of a weld and left unfilled by weld material.

visual examination: see para. 344.2.1.

weld: a localized coalescence of material wherein coalescence is produced either by heating to suitable temperatures, with or without the application of pressure, or by application of pressure alone, and with or without the use of filler material.

weld reinforcement: weld material in excess of the specified weld size.

welder: one who performs a manual or semi-automatic welding operation. (This term is sometimes erroneously used to denote a welding machine.)

welding operator: one who operates machine or automatic welding equipment.

welding procedure: the detailed methods and practices involved in the production of a weldment.

welding procedure specification (WPS): the document which lists the parameters to be used in construction of weldments in accordance with requirements of this Code.

weldment: an assembly whose component parts are joined by welding.

300.3 Nomenclature

Dimensional and mathematical symbols used in this Code are listed in Appendix J, with definitions and location references to each. Lowercase and uppercase English letters are listed alphabetically, followed by Greek letters.

300.4 Status of Appendices

Table 300.4 indicates for each Appendix of this Code whether it contains Code requirements, guidance, or supplemental information. See the first page of each Appendix for details.

Copyright ASME International
Provided by IHS under license with ASME
No reproduction or networking permitted without license from IHS
Not for Resale

Chapter II
Design

PART 1
CONDITIONS AND CRITERIA

301 DESIGN CONDITIONS

Paragraph 301 states the qualifications of the Designer, defines the temperatures, pressures, and forces applicable to the design of piping, and states the consideration that shall be given to various effects and their consequent loadings. See also Appendix F, para. F301.

301.1 Qualifications of the Designer

The Designer is the person(s) in charge of the engineering design of a piping system and shall be experienced in the use of this Code.

The qualifications and experience required of the Designer will depend on the complexity and criticality of the system and the nature of the individual's experience. The owner's approval is required if the individual does not meet at least one of the following criteria.

(a) Completion of an engineering degree, requiring four or more years of full-time study, plus a minimum of 5 years experience in the design of related pressure piping.

(b) Professional Engineering registration, recognized by the local jurisdiction, and experience in the design of related pressure piping.

(c) Completion of an engineering associates degree, requiring at least 2 years of full-time study, plus a minimum of 10 years experience in the design of related pressure piping.

(d) Fifteen years experience in the design of related pressure piping. Experience in the design of related pressure piping is satisfied by piping design experience that includes design calculations for pressure, sustained and occasional loads, and piping flexibility.

301.2 Design Pressure

301.2.1 General

(a) The design pressure of each component in a piping system shall be not less than the pressure at the most severe condition of coincident internal or external pressure and temperature (minimum or maximum) expected during service, except as provided in para. 302.2.4.

(b) The most severe condition is that which results in the greatest required component thickness and the highest component rating.

(c) When more than one set of pressure-temperature conditions exist for a piping system, the conditions governing the rating of components conforming to listed standards may differ from the conditions governing the rating of components designed in accordance with para. 304.

(d) When a pipe is separated into individualized pressure-containing chambers (including jacketed piping, blanks, etc.), the partition wall shall be designed on the basis of the most severe coincident temperature (minimum or maximum) and differential pressure between the adjoining chambers expected during service, except as provided in para. 302.2.4.

301.2.2 Required Pressure Containment or Relief

(a) Provision shall be made to safely contain or relieve (see para. 322.6.3) any pressure to which the piping may be subjected. Piping not protected by a pressure relieving device, or that can be isolated from a pressure relieving device, shall be designed for at least the highest pressure that can be developed.

(b) Sources of pressure to be considered include ambient influences, pressure oscillations and surges, improper operation, decomposition of unstable fluids, static head, and failure of control devices.

(c) The allowances of para. 302.2.4(f) are permitted, provided that the other requirements of para. 302.2.4 are also met.

301.3 Design Temperature

The design temperature of each component in a piping system is the temperature at which, under the coincident pressure, the greatest thickness or highest component rating is required in accordance with para. 301.2. (To satisfy the requirements of para. 301.2, different components in the same piping system may have different design temperatures.)

In establishing design temperatures, consider at least the fluid temperatures, ambient temperatures, solar radiation, heating or cooling medium temperatures, and the applicable provisions of paras. 301.3.2, 301.3.3, and 301.3.4.

301.3.1 Design Minimum Temperature. The design minimum temperature is the lowest component temperature expected in service. This temperature may establish special design requirements and material qualification requirements. See also paras. 301.4.4 and 323.2.2.

Copyright ASME International
Provided by IHS under license with ASME
No reproduction or networking permitted without license from IHS
Not for Resale

301.3.2 Uninsulated Components

(a) For fluid temperatures below 65°C (150°F), the component temperature shall be taken as the fluid temperature unless solar radiation or other effects result in a higher temperature.

(b) For fluid temperatures 65°C (150°F) and above, unless a lower average wall temperature is determined by test or heat transfer calculation, the temperature for uninsulated components shall be no less than the following values:

(1) valves, pipe, lapped ends, welding fittings, and other components having wall thickness comparable to that of the pipe: 95% of the fluid temperature

(2) flanges (except lap joint) including those on fittings and valves: 90% of the fluid temperature

(3) lap joint flanges: 85% of the fluid temperature

(4) bolting: 80% of the fluid temperature

301.3.3 Externally Insulated Piping. The component design temperature shall be the fluid temperature unless calculations, tests, or service experience based on measurements support the use of another temperature. Where piping is heated or cooled by tracing or jacketing, this effect shall be considered in establishing component design temperatures.

301.3.4 Internally Insulated Piping. The component design temperature shall be based on heat transfer calculations or tests.

301.4 Ambient Effects

See Appendix F, para. F301.4.

301.4.1 Cooling: Effects on Pressure. The cooling of a gas or vapor in a piping system may reduce the pressure sufficiently to create an internal vacuum. In such a case, the piping shall be capable of withstanding the external pressure at the lower temperature, or provision shall be made to break the vacuum.

301.4.2 Fluid Expansion Effects. Provision shall be made in the design either to withstand or to relieve increased pressure caused by the heating of static fluid in a piping component. See also para. 322.6.3(b)(2).

301.4.3 Atmospheric Icing. Where the design minimum temperature of a piping system is below 0°C (32°F), the possibility of moisture condensation and buildup of ice shall be considered and provisions made in the design to avoid resultant malfunctions. This applies to surfaces of moving parts of shutoff valves, control valves, pressure relief devices including discharge piping, and other components.

301.4.4 Low Ambient Temperature. Consideration shall be given to low ambient temperature conditions for displacement stress analysis.

301.5 Dynamic Effects

See Appendix F, para. F301.5.

301.5.1 Impact. Impact forces caused by external or internal conditions (including changes in flow rate, hydraulic shock, liquid or solid slugging, flashing, and geysering) shall be taken into account in the design of piping.

301.5.2 Wind. The effect of wind loading shall be taken into account in the design of exposed piping. The method of analysis may be as described in ASCE 7, Minimum Design Loads for Buildings and Other Structures. **(04)**

301.5.3 Earthquake. Piping shall be designed for earthquake-induced horizontal forces. The method of analysis may be as described in ASCE 7. **(04)**

301.5.4 Vibration. Piping shall be designed, arranged, and supported so as to eliminate excessive and harmful effects of vibration which may arise from such sources as impact, pressure pulsation, turbulent flow vortices, resonance in compressors, and wind.

301.5.5 Discharge Reactions. Piping shall be designed, arranged, and supported so as to withstand reaction forces due to let-down or discharge of fluids.

301.6 Weight Effects

The following weight effects, combined with loads and forces from other causes, shall be taken into account in the design of piping.

301.6.1 Live Loads. These loads include the weight of the medium transported or the medium used for test. Snow and ice loads due to both environmental and operating conditions shall be considered.

301.6.2 Dead Loads. These loads consist of the weight of piping components, insulation, and other superimposed permanent loads supported by the piping.

301.7 Thermal Expansion and Contraction Effects

The following thermal effects, combined with loads and forces from other causes, shall be taken into account in the design of piping. See also Appendix F, para. F301.7.

301.7.1 Thermal Loads Due to Restraints. These loads consist of thrusts and moments which arise when free thermal expansion and contraction of the piping are prevented by restraints or anchors.

301.7.2 Loads Due to Temperature Gradients. These loads arise from stresses in pipe walls resulting from large rapid temperature changes or from unequal temperature distribution as may result from a high heat flux through a comparatively thick pipe or stratified two-phase flow causing bowing of the line.

Copyright ASME International
Provided by IHS under license with ASME
No reproduction or networking permitted without license from IHS Not for Resale

301.7.3 Loads Due to Differences in Expansion Characteristics. These loads result from differences in thermal expansion where materials with different thermal expansion coefficients are combined, as in bimetallic, lined, jacketed, or metallic–nonmetallic piping.

301.8 Effects of Support, Anchor, and Terminal Movements

The effects of movements of piping supports, anchors, and connected equipment shall be taken into account in the design of piping. These movements may result from the flexibility and/or thermal expansion of equipment, supports, or anchors; and from settlement, tidal movements, or wind sway.

301.9 Reduced Ductility Effects

The harmful effects of reduced ductility shall be taken into account in the design of piping. The effects may, for example, result from welding, heat treatment, forming, bending, or low operating temperatures, including the chilling effect of sudden loss of pressure on highly volatile fluids. Low ambient temperatures expected during operation shall be considered.

301.10 Cyclic Effects

Fatigue due to pressure cycling, thermal cycling, and other cyclic loadings shall be considered in the design of piping. See Appendix F, para. F301.10.

301.11 Air Condensation Effects

At operating temperatures below −191°C (−312°F) in ambient air, condensation and oxygen enrichment occur. These shall be considered in selecting materials, including insulation, and adequate shielding and/or disposal shall be provided.

302 DESIGN CRITERIA

302.1 General

Paragraph 302 states pressure-temperature ratings, stress criteria, design allowances, and minimum design values together with permissible variations of these factors as applied to the design of piping.

302.2 Pressure-Temperature Design Criteria

302.2.1 Listed Components Having Established Ratings. Except as limited elsewhere in the Code, pressure-temperature ratings contained in standards for piping components listed in Table 326.1 are acceptable for design pressures and temperatures in accordance with this Code. The provisions of this Code may be used at the owner's responsibility to extend the pressure-temperature ratings of a component beyond the ratings of the listed standard.

(04) **302.2.2 Listed Components Not Having Specific Ratings.** Some of the standards for components in Table 326.1 (e.g., ASME B16.9, B16.11, and B16.28) state that pressure-temperature ratings are based on straight seamless pipe. Except as limited in the standard or elsewhere in this Code, such a component, made of a material having the same allowable stress as the pipe shall be rated using not more than 87.5% of the nominal thickness of seamless pipe corresponding to the schedule, weight, or pressure class of the fitting, less all allowances applied to the pipe (e.g., thread depth and/or corrosion allowance). For components with straight or spiral longitudinal welded joints in pressure containing components, the pressure rating determined above shall be further multiplied by W, as defined in para. 302.3.5(e).

302.2.3 Unlisted Components

(a) Components not listed in Table 326.1, but which conform to a published specification or standard, may be used within the following limitations.

(1) The designer shall be satisfied that composition, mechanical properties, method of manufacture, and quality control are comparable to the corresponding characteristics of listed components.

(2) Pressure design shall be verified in accordance with para. 304.

(b) Other unlisted components shall be qualified for pressure design as required by para. 304.7.2.

302.2.4 Allowances for Pressure and Temperature Variations. Occasional variations of pressure and/or temperature may occur in a piping system. Such variations shall be considered in selecting design pressure (para. 301.2) and design temperature (para. 301.3). The most severe coincident pressure and temperature shall determine the design conditions unless all of the following criteria are met:

(a) The piping system shall have no pressure containing components of cast iron or other nonductile metal.

(b) Nominal pressure stresses shall not exceed the yield strength at temperature (see para. 302.3 of this Code and S_y data in BPV Code, Section II, Part D, Table Y-1).

(c) Combined longitudinal stresses shall not exceed the limits established in para. 302.3.6.

(d) The total number of pressure-temperature variations above the design conditions shall not exceed 1000 during the life of the piping system.

(e) In no case shall the increased pressure exceed the test pressure used under para. 345 for the piping system.

(f) Occasional variations above design conditions shall remain within one of the following limits for pressure design.

(1) Subject to the owner's approval, it is permissible to exceed the pressure rating or the allowable stress for pressure design at the temperature of the increased condition by not more than

Copyright ASME International
Provided by IHS under license with ASME
No reproduction or networking permitted without license from IHS Not for Resale

(a) 33% for no more than 10 hr at any one time and no more than 100 hr/yr, or

(b) 20% for no more than 50 hr at any one time and no more than 500 hr/yr

The effects of such variations shall be determined by the designer to be safe over the service life of the piping system by methods acceptable to the owner. (See Appendix V.)

(2) When the variation is self-limiting (e.g., due to a pressure relieving event), and lasts no more than 50 hr at any one time and not more than 500 hr/year, it is permissible to exceed the pressure rating or the allowable stress for pressure design at the temperature of the increased condition by not more than 20%.

(g) The combined effects of the sustained and cyclic variations on the serviceability of all components in the system shall have been evaluated.

(h) Temperature variations below the minimum temperature shown in Appendix A are not permitted unless the requirements of para. 323.2.2 are met for the lowest temperature during the variation.

(i) The application of pressures exceeding pressure-temperature ratings of valves may under certain conditions cause loss of seat tightness or difficulty of operation. The differential pressure on the valve closure element should not exceed the maximum differential pressure rating established by the valve manufacturer. Such applications are the owner's responsibility.

302.2.5 Ratings at Junction of Different Services. When two services that operate at different pressure-temperature conditions are connected, the valve segregating the two services shall be rated for the more severe service condition. If the valve will operate at a different temperature due to its remoteness from a header or piece of equipment, this valve (and any mating flanges) may be selected on the basis of the different temperature, provided it can withstand the required pressure tests on each side of the valve. For piping on either side of the valve, however, each system shall be designed for the conditions of the service to which it is connected.

302.3 Allowable Stresses and Other Stress Limits

302.3.1 General. The allowable stresses defined in paras. 302.3.1(a), (b), and (c) shall be used in design calculations unless modified by other provisions of this Code.

(a) Tension. Basic allowable stresses S in tension for metals and design stresses S for bolting materials, listed in Tables A-1 and A-2, respectively, are determined in accordance with para. 302.3.2.

In equations elsewhere in the Code where the product SE appears, the value S is multiplied by one of the following quality factors:[1]

(1) casting quality factor E_c as defined in para. 302.3.3 and tabulated for various material specifications in Table A-1A, and for various levels of supplementary examination in Table 302.3.3C; or

(2) longitudinal weld joint factor E_j as defined in 302.3.4 and tabulated for various material specifications and classes in Table A-1B, and for various types of joints and supplementary examinations in Table 302.3.4.

The stress values in Tables A-1 and A-2 are grouped by materials and product forms, and are for stated temperatures up to the limit provided in para. 323.2.1(a). Straight line interpolation between temperatures is permissible. The temperature intended is the design temperature (see para. 301.3).

(b) Shear and Bearing. Allowable stresses in shear shall be 0.80 times the basic allowable stress in tension tabulated in Table A-1 or A-2. Allowable stress in bearing shall be 1.60 times that value.

(c) Compression. Allowable stresses in compression shall be no greater than the basic allowable stresses in tension as tabulated in Appendix A. Consideration shall be given to structural stability.

302.3.2 Bases for Design Stresses.[2] The bases for establishing design stress values for bolting materials and allowable stress values for other metallic materials in this Code are as follows.

(a) Bolting Materials. Design stress values at temperature for bolting materials shall not exceed the lowest of the following:

(1) except as provided in (3) below, the lower of one-fourth of specified minimum tensile strength at room temperature (S_T) and one-fourth of tensile strength at temperature

(2) except as provided in (3) below, the lower of two-thirds of specified minimum yield strength at room temperature (S_Y) and two-thirds of yield strength at temperature

(3) at temperatures below the creep range, for bolting materials whose strength has been enhanced by heat treatment or strain hardening, the least of one-fifth of S_T, one-fourth of the tensile strength at temperature, one-fourth of S_Y, and two-thirds of the yield strength at (04)

[1] If a component is made of castings joined by longitudinal welds, both a casting and a weld joint quality factor shall be applied. The equivalent quality factor E is the product of E_c, Table A-1A, and E_j, Table A-1B.

[2] These bases are the same as those for BPV Code, Section VIII, Division 2, given in Section II, Part D. Stress values in B31.3, Appendix A, at temperatures below the creep range generally are the same as those listed in Section II, Part D, Tables 2A and 2B, and in Table 3 for bolting, corresponding to those bases. They have been adjusted as necessary to exclude casting quality factors and longitudinal weld joint quality factors. Stress values at temperatures in the creep range generally are the same as those in Section II, Part D, Tables 1A and 1B, corresponding to the bases for section VIII, Division 1. Stress values for temperatures above those for which values are listed in the BPV Code, and for materials not listed in the BPV Code, are based on those listed in Appendix A of the 1966 Edition of ASA B31.3. Such values will be revised when reliable mechanical property data for elevated temperatures and/or for additional materials become available to the Committee.

Copyright ASME International
Provided by IHS under license with ASME
No reproduction or networking permitted without license from IHS
Not for Resale

temperature (unless these values are lower than corresponding values for annealed material, in which case the annealed values shall be used)

(4) two-thirds of the yield strength at temperature [see para. 302.3.2(f)]

(5) 100% of the average stress for a creep rate of 0.01% per 1 000 hr

(6) 67% of the average stress for rupture at the end of 100 000 hr

(7) 80% of minimum stress for rupture at the end of 100 000 hr

(b) Cast Iron. Basic allowable stress values at temperature for cast iron shall not exceed the lower of the following:

(1) one-tenth of the specified minimum tensile strength at room temperature

(2) one-tenth of the tensile strength at temperature [see para. 302.3.2(f)]

(c) Malleable Iron. Basic allowable stress values at temperature for malleable iron shall not exceed the lower of the following:

(1) one-fifth of the specified minimum tensile strength at room temperature

(2) one-fifth of the tensile strength at temperature [see para. 302.3.2(f)]

(d) Other Materials. Basic allowable stress values at temperature for materials other than bolting materials, cast iron, and malleable iron shall not exceed the lowest of the following:

(1) the lower of one-third of S_T and one-third of tensile strength at temperature.

(2) except as provided in (3) below, the lower of two-thirds of S_Y and two-thirds of yield strength at temperature.

(3) for austenitic stainless steels and nickel alloys having similar stress–strain behavior, the lower of two-thirds of S_Y and 90% of yield strength at temperature [see (e) below].

(4) 100% of the average stress for a creep rate of 0.01% per 1 000 hr.

(5) 67% of the average stress for rupture at the end of 100 000 hr.

(6) 80% of the minimum stress for rupture at the end of 100 000 hr.

(7) for structural grade materials, the basic allowable stress shall be 0.92 times the lowest value determined in paras. 302.3.2(d)(1) through (6).

(8) In the application of these criteria, the yield strength at room temperature is considered to be $S_Y R_Y$, and the tensile strength at room temperature is considered to be $1.1 S_T R_T$.

(e) Application Limits. Application of stress values determined in accordance with para. 302.3.2(d)(3) is not recommended for flanged joints and other components in which slight deformation can cause leakage or malfunction. [These values are shown in italics or boldface in Table A-1, as explained in Note (4) to Appendix A Tables.] Instead, either 75% of the stress value in Table A-1 or two-thirds of the yield strength at temperature listed in the BPV Code, Section II, Part D, Table Y-1 should be used.

(f) Unlisted Materials. For a material which conforms to para. 323.1.2, the tensile (yield) strength at temperature shall be derived by multiplying the average expected tensile (yield) strength at temperature by the ratio of S_T (S_Y) divided by the average expected tensile (yield) strength at room temperature.

302.3.3 Casting Quality Factor, E_c

(a) General. The casting quality factors, E_c, defined herein shall be used for cast components not having pressure-temperature ratings established by standards in Table 326.1.

(b) Basic Quality Factors. Castings of gray and malleable iron, conforming to listed specifications, are assigned a basic casting quality factor, E_c, of 1.00 (due to their conservative allowable stress basis). For most other metals, static castings which conform to the material specification and have been visually examined as required by MSS SP-55, Quality Standard for Steel Castings for Valves, Flanges and Fittings and Other Piping Components — Visual Method, are assigned a basic casting quality factor E_c of 0.80. Centrifugal castings which meet specification requirements only for chemical analysis, tensile, hydrostatic, and flattening tests, and visual examination are assigned a basic casting quality factor of 0.80. Basic casting quality factors are tabulated for listed specifications in Table A-1A.

(c) Increased Quality Factors. Casting quality factors may be increased when supplementary examinations are performed on each casting. Table 302.3.3C states the increased casting quality factors E_c which maybe used for various combinations of supplementary examination. Table 302.3.3D states the acceptance criteria for the examination methods specified in the Notes to Table 302.3.3C. Quality factors higher than those shown in Table 302.3.3C do not result from combining tests (2)(a) and (2)(b), or (3)(a) and (3)(b). In no case shall the quality factor exceed 1.00.

Several of the specifications in Appendix A require machining of all surfaces and/or one or more of these supplementary examinations. In such cases, the appropriate increased quality factor is shown in Table A-1A.

302.3.4 Weld Joint Quality Factor, E_j

(a) Basic Quality Factors. The weld joint quality factors, E_j, tabulated in Table A-1B are basic factors for straight or spiral longitudinal welded joints for pressure-containing components as shown in Table 302.3.4.

(b) Increased Quality Factors. Table 302.3.4 also indicates higher joint quality factors which may be substituted for those in Table A-1B for certain kinds of welds

Copyright ASME International
Provided by IHS under license with ASME
No reproduction or networking permitted without license from IHS Not for Resale

Table 302.3.3C Increased Casting Quality Factors, E_C

Supplementary Examination in Accordance With Note(s)	Factor, E_C
(1)	0.85
(2)(a) or (2)(b)	0.85
(3)(a) or (3)(b)	0.95
(1) and (2)(a) or (2)(b)	0.90
(1) and (3)(a) or (3)(b)	1.00
(2)(a) or (2)(b) and (3)(a) or (3)(b)	1.00

GENERAL NOTE: Titles of standards referenced in this Table's Notes are as follows:

ASTM E 114, Practice for Ultrasonic Pulse-Echo Straight-Beam Testing by the Contact Method

ASTM E 125, Reference Photographs for Magnetic Particle Indications on Ferrous Castings

ASTM E 142, Method for Controlling Quality of Radiographic Testing

ASTM E 165, Practice for Liquid Penetrant Inspection Method

ASTM E 709, Practice for Magnetic Particle Examination

ASME B46.1, Surface Texture (Surface Roughness, Waviness and Lay)

MSS SP-53, Quality Standard for Steel Castings for Valves, Flanges and Fittings and Other Piping Components—Magnetic Particle Examination Method

NOTES:

(1) Machine all surfaces to a finish of 6.3 μm R_a (250 μin. R_a per ASME B46.1), thus increasing the effectiveness of surface examination.

(2) (a) Examine all surfaces of each casting (magnetic material only) by the magnetic particle method in accordance with ASTM E 709. Judge acceptability in accordance with MSS SP-53, using reference photos in ASTM E 125.

(b) Examine all surfaces of each casting by the liquid penetrant method, in accordance with ASTM E 165. Judge acceptability of flaws and weld repairs in accordance with Table 1 of MSS SP-53, using ASTM E 125 as a reference for surface flaws.

(3) (a) Fully examine each casting ultrasonically in accordance with ASTM E 114, accepting a casting only if there is no evidence of depth of defects in excess of 5% of wall thickness.

(b) Fully radiograph each casting in accordance with ASTM E 142. Judge in accordance with the stated acceptance levels in Table 302.3.3D.

Table 302.3.3D Acceptance Levels for Castings

Material Examined Thickness, T	Applicable Standard	Acceptance Level (or Class)	Acceptable Discontinuities
Steel $T \le 25$ mm (1 in.)	ASTM E 446	1	Types A, B, C
Steel $T > 25$ mm, ≤ 51 mm (2 in.)	ASTM E 446	2	Types A, B, C
Steel $T > 51$ mm, ≤ 114 mm ($4\frac{1}{2}$ in.)	ASTM E 186	2	Categories A, B, C
Steel $T > 114$ mm, ≤ 305 mm (12 in.)	ASTM E 280	2	Categories A, B, C
Aluminum & magnesium	ASTM E 155	. . .	Shown in reference radiographs
Copper, Ni–Cu	ASTM E 272	2	Codes A, Ba, Bb
Bronze	ASTM E 310	2	Codes A and B

GENERAL NOTE: Titles of ASTM standards referenced in this Table are as follows:

ASTM

E 155 Reference Radiographs for Inspection of Aluminum and Magnesium Castings

E 186 Reference Radiographs for Heavy-Walled [2 to 4-$\frac{1}{2}$-in. (51 to 114-mm)] Steel Castings

E 272 Reference Radiographs for High-Strength Copper-Base and Nickel-Copper Castings

E 280 Reference Radiographs for Heavy-Walled [4-$\frac{1}{2}$ to 12-in. (114 to 305-mm)] Steel Castings

E 310 Reference Radiographs for Tin Bronze Castings

E 446 Reference Radiographs for Steel Castings Up to 2 in. (51 mm) in Thickness

if additional examination is performed beyond that required by the product specification.

(04) **302.3.5 Limits of Calculated Stresses Due to Sustained Loads and Displacement Strains**

(a) Internal Pressure Stresses. Stresses due to internal pressure shall be considered safe when the wall thickness of the piping component, including any reinforcement, meets the requirements of para. 304.

(b) External Pressure Stresses. Stresses due to external pressure shall be considered safe when the wall thickness of the piping component, and its means of stiffening, meet the requirements of para. 304.

(c) Longitudinal Stresses S_L. The sum of the longitudinal stresses S_L in any component in a piping system, due to sustained loads such as pressure and weight, shall not exceed the product S_hW; S_h and W are defined in (d) and (e) below. The weld joint strength reduction factor, W, may be taken as 1.0 for longitudinal welds. The thickness of pipe used in calculating S_L shall be the nominal thickness, $\overline{T}$, minus mechanical, corrosion, and erosion allowance, c, for the location under consideration. The loads due to weight should be based on the nominal thickness of all system components unless otherwise justified in a more rigorous analysis.

(d) Allowable Displacement Stress Range S_A. The computed displacement stress range S_E in a piping system (see para. 319.4.4) shall not exceed the allowable displacement stress range S_A (see paras. 319.2.3 and 319.3.4) calculated by Eq. (1a):

$$S_A = f(1.25S_c + 0.25S_h) \quad (1a)$$

Copyright ASME International
Provided by IHS under license with ASME
No reproduction or networking permitted without license from IHS
Not for Resale

Table 302.3.4 Longitudinal Weld Joint Quality Factor, E_j

No.	Type of Joint		Type of Seam	Examination	Factor, E_j
1	Furnace butt weld, continuous weld		Straight	As required by listed specification	0.60 [Note (1)]
2	Electric resistance weld		Straight or spiral	As required by listed specification	0.85 [Note (1)]
3	Electric fusion weld				
	(a) Single butt weld		Straight or spiral	As required by listed specification or this Code	0.80
	(with or without filler metal)			Additionally spot radiographed per para. 341.5.1	0.90
				Additionally 100% radiographed per para. 344.5.1 and Table 341.3.2	1.00
	(b) Double butt weld		Straight or spiral [except as provided in 4(a) below]	As required by listed specification or this Code	0.85
	(with or without filler metal)			Additionally spot radiographed per para. 341.5.1	0.90
				Additionally 100% radiographed per para. 344.5.1 and Table 341.3.2	1.00
4	Per specific specification				
	(a) API 5L	Submerged arc weld (SAW) Gas metal arc weld (GMAW) Combined GMAW, SAW 	Straight with one or two seams Spiral	As required by specification	0.95

NOTE:
(1) It is not permitted to increase the joint quality factor by additional examination for joint 1 or 2.

Copyright ASME International
Provided by IHS under license with ASME
No reproduction or networking permitted without license from IHS
Not for Resale

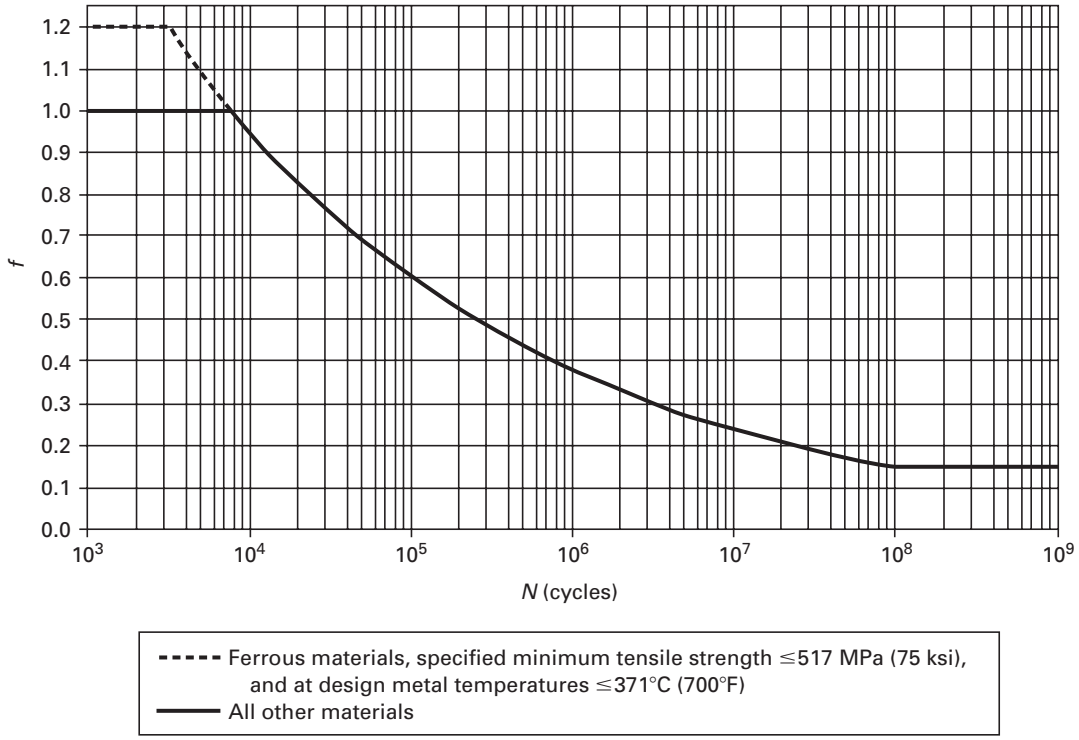

(04) **Fig. 302.3.5 Stress Range Reduction Factor, *f***

When S_h is greater than S_L, the difference between them may be added to the term $0.25S_h$ in Eq. (1a). In that case, the allowable stress range is calculated by Eq. (1b):

$$S_A = f\left[1.25(S_c + S_h) - S_L\right] \quad (1b)$$

For Eqs. (1a) and (1b):

f = stress range factor,[3] calculated by Eq. (1c)[4]. In Equations (1a) and (1b), S_c and S_h shall be limited to a maximum of 138 MPa (20 ksi) when using a value of $f > 1.0$.

$$f \text{ (see Fig. 302.3.5)} = 6.0(N)^{-0.2} \le f_m \quad (1c)$$

f_m = maximum value of stress range factor; 1.2 for ferrous materials with specified minimum tensile strengths ≤ 517 MPa (75 ksi) and at metal temperatures ≤ 371°C (700°F); otherwise f_m = 1.0

N = equivalent number of full displacement cycles during the expected service life of the piping system[5]

S_c = basic allowable stress[6] at minimum metal temperature expected during the displacement cycle under analysis

S_h = basic allowable stress[6] at maximum metal temperature expected during the displacement cycle under analysis

When the computed stress range varies, whether from thermal expansion or other conditions, S_E is defined as the greatest computed displacement stress range. The value of N in such cases can be calculated by Eq. (1d):

$$N = N_E + \sum(r_i^5 N_i) \text{ for } i = 1, 2, \ldots, n \quad (1d)$$

where

N_E = number of cycles of maximum computed displacement stress range, S_E

N_i = number of cycles associated with displacement stress range S_i

[3] Applies to essentially noncorroded piping. Corrosion can sharply decrease cyclic life; therefore, corrosion resistant materials should be considered where a large number of major stress cycles is anticipated.

[4] The minimum value for f is 0.15, which results in an allowable displacement stress range S_A for an indefinitely large number of cycles.

[5] The designer is cautioned that the fatigue life of materials operated at elevated temperature may be reduced.

[6] For castings, the basic allowable stress shall be multiplied by the applicable casting quality factor E_c. For longitudinal welds, the basic allowable stress need not be multiplied by the weld quality factor E_j.

Copyright ASME International
Provided by IHS under license with ASME
No reproduction or networking permitted without license from IHS Not for Resale

r_i = S_i/S_E
S_i = any computed displacement stress range smaller than S_E

(e) Weld Joint Strength Reduction Factor W. At elevated temperatures, the long term strength of weld joints may be lower than the long term strength of the base material. For welded pipe (i.e., not seamless), the product of the allowable stress and the applicable weld quality factor *SE* shall be multiplied by the weld joint strength reduction factor *W* when determining the required wall thickness for internal pressure per para. 304. When evaluating longitudinal stresses for sustained loads per para. 302.3.5(c), at circumferential welds the allowable stress S_h shall be adjusted by multiplying it by *W*. The weld joint strength reduction factor is not required when evaluating occasional loads such as wind and earthquake, or when evaluating permissible variations in accordance with para. 302.2.4. The pressure rating or allowable stress for the occasional load or variation condition is not required to be reduced by the weld joint strength reduction factor. It is also not required when calculating the allowable stress range for displacement stresses S_A in para. 302.3.5(d). The weld joint strength reduction factor only applies at weld locations.

The weld joint strength reduction factor is the ratio of the nominal stress to cause failure of the weld joint to that of the base material for the same duration. In the absence of more applicable data (e.g., creep testing), the factor shall be taken as 1.0 at temperatures of 510°C (950°F) and below, and 0.5 at 815°C (1500°F) for all materials. The strength reduction factor shall be linearly interpolated for intermediate temperatures. The designer is responsible for determining weld joint strength reduction factors for temperatures above 815°C (1500°F).

Creep testing of weld joints to determine weld joint strength reduction factors should be full thickness cross-weld specimens with test durations of at least 1000 hr. Full thickness tests shall be used unless the designer otherwise considers effects such as stress redistribution across the weld.

302.3.6 Limits of Calculated Stresses due to Occasional Loads

(04) *(a) Operation.* The sum of the longitudinal stresses S_L due to sustained loads, such as pressure and weight, and of the stresses produced by occasional loads, such as wind or earthquake, may be as much as 1.33 times the basic allowable stress given in Appendix A.

At temperatures greater than 427°C (800°F), as an alternative to the use of 1.33 times the basic allowable stress provided in Table A-1, the allowable stress for occasional loads of short duration, such as surge, extreme wind or earthquake, may be taken as the strength reduction factor times 90% of the yield strength at temperature for materials other than cast or ductile iron and other materials with non-ductile behavior. This yield strength shall be as listed in the BPV Code, Section II, Part D, Table Y-1 or Y-3, or determined in accordance with para. 302.3.2(f). The strength reduction factor represents the reduction in yield strength with long-term exposure of the material to elevated temperatures and, in the absence of more applicable data, shall be taken as 1.0 for austenitic stainless steel and 0.8 for other materials.

For castings, the basic allowable stress shall be multiplied by the casting quality factor E_c. Where the allowable stress value exceeds two-thirds of yield strength at temperature, the allowable stress value must be reduced as specified in para. 302.3.2(e). Wind and earthquake forces need not be considered as acting concurrently.

(b) Test. Stresses due to test conditions are not subject to the limitations in para. 302.3. It is not necessary to consider other occasional loads, such as wind and earthquake, as occurring concurrently with test loads.

302.4 Allowances

In determining the minimum required thickness of a piping component, allowances shall be included for corrosion, erosion, and thread depth or groove depth. See definition for *c* in para. 304.1.1(b).

302.4.1 Mechanical Strength. When necessary, the wall thickness shall be increased to prevent overstress, damage, collapse, or buckling due to superimposed loads from supports, ice formation, backfill, transportation, handling, or other causes. Where increasing the thickness would excessively increase local stresses or the risk of brittle fracture, or is otherwise impracticable, the required strength may be obtained through additional supports, braces, or other means without an increased wall thickness. Particular consideration should be given to the mechanical strength of small pipe connections to piping or equipment.

PART 2
PRESSURE DESIGN OF PIPING COMPONENTS

303 GENERAL (04)

Components manufactured in accordance with standards listed in Table 326.1 shall be considered suitable for use at pressure-temperature ratings in accordance with para. 302.2.1 or para. 302.2.2, as applicable. The rules in para. 304 are intended for pressure design of components not covered in Table 326.1, but may be used for a special or more rigorous design of such components, or to satisfy requirements of para. 302.2.2. Designs shall be checked for adequacy of mechanical strength under applicable loadings enumerated in para. 301.

Copyright ASME International
Provided by IHS under license with ASME
No reproduction or networking permitted without license from IHS Not for Resale

304 PRESSURE DESIGN OF COMPONENTS

304.1 Straight Pipe

304.1.1 General

(a) The required thickness of straight sections of pipe shall be determined in accordance with Eq. (2):

$$t_m = t + c \tag{2}$$

The minimum thickness T for the pipe selected, considering manufacturer's minus tolerance, shall be not less than t_m.

(04) *(b)* The following nomenclature is used in the equations for pressure design of straight pipe.

c = the sum of the mechanical allowances (thread or groove depth) plus corrosion and erosion allowances. For threaded components, the nominal thread depth (dimension h of ASME B1.20.1, or equivalent) shall apply. For machined surfaces or grooves where the tolerance is not specified, the tolerance shall be assumed to be 0.5 mm (0.02 in.) in addition to the specified depth of the cut.

D = outside diameter of pipe as listed in tables of standards or specifications or as measured

d = inside diameter of pipe. For pressure design calculation, the inside diameter of the pipe is the maximum value allowable under the purchase specification.

E = quality factor from Table A-1A or A-1B

P = internal design gage pressure

S = stress value for material from Table A-1

T = pipe wall thickness (measured or minimum per purchase specification)

t = pressure design thickness, as calculated in accordance with para. 304.1.2 for internal pressure or as determined in accordance with para. 304.1.3 for external pressure

t_m = minimum required thickness, including mechanical, corrosion, and erosion allowances

W = weld joint strength reduction factor per para. 302.3.5(e)

Y = coefficient from Table 304.1.1, valid for $t < D/6$ and for materials shown. The value of Y may be interpolated for intermediate temperatures. For $t \geq D/6$,

$$Y = \frac{d + 2c}{D + d + 2c}$$

304.1.2 Straight Pipe Under Internal Pressure

(04) *(a)* For $t < D/6$, the internal pressure design thickness for straight pipe shall be not less than that calculated in accordance with either Eq. (3a) or Eq. (3b):

$$t = \frac{PD}{2(SE + PY)} \tag{3a}$$

$$t = \frac{P(d + 2c)}{2[SEW - P(1 - Y)]} \tag{3b}$$

Table 304.1.1 Values of Coefficient Y for $t < D/6$

	Temperature, °C (°F)					
Materials	≤ 482 (900 & Lower)	510 (950)	538 (1000)	566 (1050)	593 (1100)	≥ 621 (1150 & Up)
Ferritic steels	0.4	0.5	0.7	0.7	0.7	0.7
Austenitic steels	0.4	0.4	0.4	0.4	0.5	0.7
Other ductile metals	0.4	0.4	0.4	0.4	0.4	0.4
Cast iron	0.0	...	...	...	...	...

(b) For $t \geq D/6$ or for $P/SE > 0.385$, calculation of pressure design thickness for straight pipe requires special consideration of factors such as theory of failure, effects of fatigue, and thermal stress.

304.1.3 Straight Pipe Under External Pressure. To determine wall thickness and stiffening requirements for straight pipe under external pressure, the procedure outlined in the BPV Code, Section VIII, Division 1, UG-28 through UG-30 shall be followed, using as the design length L the running centerline length between any two sections stiffened in accordance with UG-29. As an exception, for pipe with $D_o/t < 10$, the value of S to be used in determining P_{a2} shall be the lesser of the following values for pipe material at design temperature:

(a) 1.5 times the stress value from Table A-1 of this Code, or

(b) 0.9 times the yield strength tabulated in Section II, Part D, Table Y-1 for materials listed therein

(The symbol D_o in Section VIII is equivalent to D in this Code.)

304.2 Curved and Mitered Segments of Pipe

304.2.1 Pipe Bends. The minimum required thickness t_m of a bend, after bending, in its finished form, shall be determined in accordance with Eq. (2) and Eq. (3c): (04)

$$t = \frac{PD}{2[(SEW/I) + PY]} \tag{3c}$$

where at the intrados (inside bend radius)

$$I = \frac{4(R_1/D) - 1}{4(R_1/D) - 2} \tag{3d}$$

and at the extrados (outside bend radius)

$$I = \frac{4(R_1/D) + 1}{4(R_1/D) + 2} \tag{3e}$$

and at the sidewall on the bend centerline radius, $I = 1.0$.

Copyright ASME International
Provided by IHS under license with ASME
No reproduction or networking permitted without license from IHS
Not for Resale

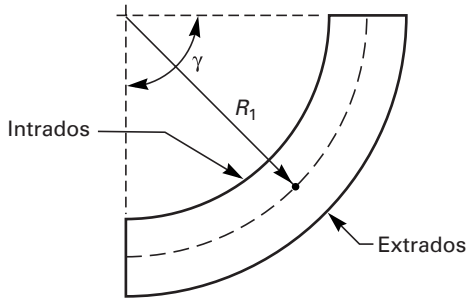

Fig. 304.2.1 Nomenclature for Pipe Bends

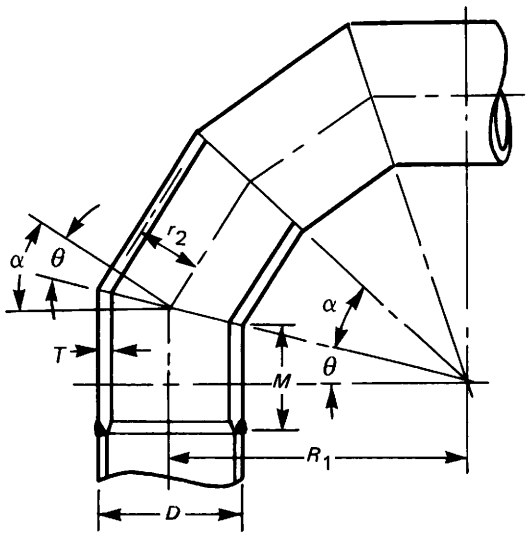

Fig. 304.2.3 Nomenclature for Miter Bends

R_1 = bend radius of welding elbow or pipe bend

Thickness variations from the intrados to the extrados and along the length of the bend shall be gradual. The thickness requirements apply at the mid-span of the bend, $\gamma/2$, at the intrados, extrados, and bend centerline radius. The minimum thickness at the end tangents shall not be less than the requirements of para. 304.1 for straight pipe (see Fig. 304.2.1).

(04) **304.2.2 Elbows.** Manufactured elbows not in accordance with para. 303 shall be qualified as required by para. 304.7.2 or designed in accordance with para. 304.2.1, except as provided in para. 328.4.2(b)(6).

(04) **304.2.3 Miter Bends.** An angular offset of 3 deg or less (angle α in Fig. 304.2.3) does not require design consideration as a miter bend. Acceptable methods for pressure design of multiple and single miter bends are given in (a) and (b) below.

(a) Multiple Miter Bends. The maximum allowable internal pressure shall be the lesser value calculated from Eqs. (4a) and (4b). These equations are not applicable when θ exceeds 22.5 deg.

$$P_m = \frac{SEW(T-c)}{r_2}\left(\frac{T-c}{(T-c)+0.643\tan\theta\sqrt{r_2(T-c)}}\right) \quad (4a)$$

$$P_m = \frac{SEW(T-c)}{r_2}\left(\frac{R_1-r_2}{R_1-0.5r_2}\right) \quad (4b)$$

(b) Single Miter Bends

(1) The maximum allowable internal pressure for a single miter bend with angle θ not greater than 22.5 deg shall be calculated by Eq. (4a).

(2) The maximum allowable internal pressure for a single miter bend with angle θ greater than 22.5 deg shall be calculated by Eq. (4c):

$$P_m = \frac{SEW(T-c)}{r_2}\left(\frac{T-c}{(T-c)+1.25\tan\theta\sqrt{r_2(T-c)}}\right) \quad (4c)$$

(c) The miter pipe wall thickness T used in Eqs. (4a), (4b), and (4c) shall extend a distance not less than M from the inside crotch of the end miter welds where

M = the larger of $2.5(r_2T)^{0.5}$ or $\tan\theta\,(R_1 - r_2)$

The length of taper at the end of the miter pipe may be included in the distance M.

(d) The following nomenclature is used in Eqs. (4a), (4b), and (4c) for the pressure design of miter bends:

c = same as defined in para. 304.1.1
E = same as defined in para. 304.1.1
P_m = maximum allowable internal pressure for miter bends
R_1 = effective radius of miter bend, defined as the shortest distance from the pipe centerline to the intersection of the planes of adjacent miter joints
r_2 = mean radius of pipe using nominal wall $\overline{T}$
S = same as defined in para. 304.1.1
T = miter pipe wall thickness (measured or minimum per purchase specification)
W = same as defined in para. 304.1.1
α = angle of change in direction at miter joint
= 2θ
θ = angle of miter cut

For compliance with this Code, the value of R_1 shall be not less than that given by Eq. (5):

$$R_1 = \frac{A}{\tan\theta} + \frac{D}{2} \quad (5)$$

where A has the following empirical values:

(1) for SI metric units:

Copyright ASME International
Provided by IHS under license with ASME
No reproduction or networking permitted without license from IHS
Not for Resale

$(T - c)$, mm	A
≤ 13	25
$13 < (T - c) < 22$	$2(T - c)$
≥ 22	$[2(T - c)/3] + 30$

(2) for U.S. customary units:

$(T - c)$, in.	A
≤ 0.5	1.0
$0.5 < (T - c) < 0.88$	$2(T - c)$
≥ 0.88	$[2(T - c)/3] + 1.17$

304.2.4 Curved and Mitered Segments of Pipe Under External Pressure. The wall thickness of curved and mitered segments of pipe subjected to external pressure may be determined as specified for straight pipe in para. 304.1.3.

304.3 Branch Connections

304.3.1 General

(a) Except as provided in (b) below, the requirements in paras. 304.3.2 through 304.3.4 are applicable to branch connections made in accordance with the following methods:

(1) fittings (tees, extruded outlets, branch outlet fittings per MSS SP-97, laterals, crosses)

(2) unlisted cast or forged branch connection fittings (see para. 300.2), and couplings not over DN 80 (NPS 3), attached to the run pipe by welding

(3) welding the branch pipe directly to the run pipe, with or without added reinforcement, as covered in para. 328.5.4

(b) The rules in paras. 304.3.2 through 304.3.4 are minimum requirements, valid only for branch connections in which (using the nomenclature of Fig. 304.3.3):

(1) the run pipe diameter-to-thickness ratio (D_h/T_h) is less than 100 and the branch-to-run diameter ratio (D_b/D_h) is not greater than 1.0

(2) for run pipe with $(D_h/T_h) \geq 100$, the branch diameter D_b is less than one-half the run diameter D_h;

(3) angle β is at least 45 deg

(4) the axis of the branch intersects the axis of the run

(c) Where the provisions of (a) and (b) above are not met, pressure design shall be qualified as required by para. 304.7.2.

(d) Other design considerations relating to branch connections are stated in para. 304.3.5.

304.3.2 Strength of Branch Connections. A pipe having a branch connection is weakened by the opening that must be made in it and, unless the wall thickness of the pipe is sufficiently in excess of that required to sustain the pressure, it is necessary to provide added reinforcement. The amount of reinforcement required to sustain the pressure shall be determined in accordance with para. 304.3.3 or 304.3.4. There are, however, certain branch connections which have adequate pressure strength or reinforcement as constructed. It may be assumed without calculation that a branch connection has adequate strength to sustain the internal and external pressure which will be applied to it if:

(a) the branch connection utilizes a listed fitting in accordance with para. 303;

(b) the branch connection is made by welding a threaded or socket welding coupling or half coupling directly to the run in accordance with para. 328.5.4, provided the size of the branch does not exceed DN 50 (NPS 2) nor one-fourth the nominal size of the run. The minimum wall thickness of the coupling anywhere in the reinforcement zone (if threads are in the zone, wall thickness is measured from root of thread to minimum outside diameter) shall be not less than that of the unthreaded branch pipe. In no case shall a coupling or half coupling have a rating less than Class 2000 per ASME B16.11.

(c) the branch connection utilizes an unlisted branch connection fitting (see para. 300.2), provided the fitting is made from materials listed in Table A-1 and provided that the branch connection is qualified as required by para. 304.7.2.

304.3.3 Reinforcement of Welded Branch Connections. Added reinforcement is required to meet the criteria in paras. 304.3.3(b) and (c) when it is not inherent in the components of the branch connection. Sample problems illustrating the calculations for branch reinforcement are shown in Appendix H.

(a) Nomenclature. The nomenclature below is used in the pressure design of branch connections. It is illustrated in Fig. 304.3.3, which does not indicate details for construction or welding. Some of the terms defined in Appendix J are subject to further definitions or variations, as follows: (04)

b = subscript referring to branch

d_1 = effective length removed from pipe at branch. For branch intersections where the branch opening is a projection of the branch pipe inside diameter (e.g., pipe-to-pipe fabricated branch), $d_1 = [D_b - 2(T_b - c)]/\sin \beta$

d_2 = "half width" of reinforcement zone
= d_1 or $(T_b - c) + (T_h - c) + d_1/2$, whichever is greater, but in any case not more than D_h

h = subscript referring to run or header

L_4 = height of reinforcement zone outside of run pipe
= $2.5(T_h - c)$ or $2.5(T_b - c) + T_r$, whichever is less

T_b = branch pipe thickness (measured or minimum per purchase specification) except for branch connection fittings (see para. 300.2). For such connections the value of T_b for use in calculating L_4, d_2, and A_3, is the thickness of the reinforcing barrel (minimum per purchase specification) provided that the barrel thickness is uniform

Copyright ASME International
Provided by IHS under license with ASME
No reproduction or networking permitted without license from IHS
Not for Resale

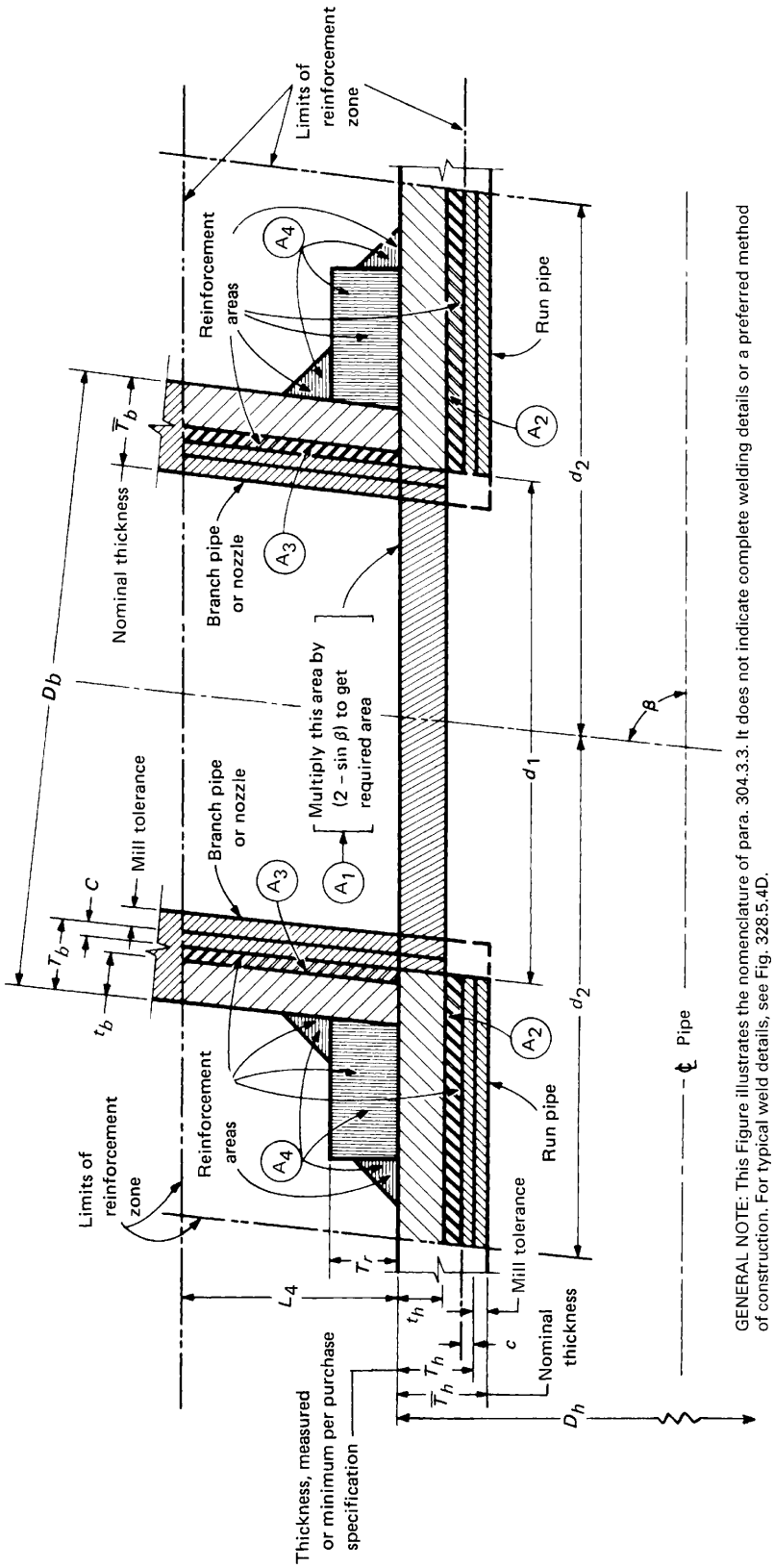

GENERAL NOTE: This Figure illustrates the nomenclature of para. 304.3.3. It does not indicate complete welding details or a preferred method of construction. For typical weld details, see Fig. 328.5.4D.

Fig. 304.3.3 Branch Connection Nomenclature

Copyright ASME International
Provided by IHS under license with ASME
No reproduction or networking permitted without license from IHS
Not for Resale

(see Fig. K328.5.4) and extends at least to the L_4 limit (see Fig. 304.3.3).

T_r = minimum thickness of reinforcing ring or saddle made from pipe (use nominal thickness if made from plate)
= 0, if there is no reinforcing ring or saddle

t = pressure design thickness of pipe, according to the appropriate wall thickness equation or procedure in para. 304.1. For welded pipe, when the branch does not intersect the longitudinal weld of the run, the basic allowable stress S for the pipe may be used in determining t_h for the purpose of reinforcement calculation only. When the branch does intersect the longitudinal weld of the run, the product SEW (of the stress value S and the appropriate weld joint quality factor E_j from Table A-1B), and the weld joint strength reduction factor, W (see para. 302.3.5) for the run pipe shall be used in the calculation. The product SEW of the branch shall be used in calculating t_b.

β = smaller angle between axes of branch and run

(b) Required Reinforcement Area. The reinforcement area A_1 required for a branch connection under internal pressure is

$$A_1 = t_h d_1 (2 - \sin \beta) \quad (6)$$

For a branch connection under external pressure, area A_1 is one-half the area calculated by Eq. (6), using as t_h the thickness required for external pressure.

(c) Available Area. The area available for reinforcement is defined as

$$A_2 + A_3 + A_4 \geq A_1 \quad (6a)$$

These areas are all within the reinforcement zone and are further defined below.

(1) Area A_2 is the area resulting from excess thickness in the run pipe wall:

$$A_2 = (2d_2 - d_1)(T_h - t_h - c) \quad (7)$$

(2) Area A_3 is the area resulting from excess thickness in the branch pipe wall:

$$A_3 = 2L_4(T_b - t_b - c)/\sin \beta \quad (8)$$

If the allowable stress for the branch pipe wall is less than that for the run pipe, its calculated area must be reduced in the ratio of allowable stress values of the branch to the run in determining its contributions to area A_3.

(3) Area A_4 is the area of other metal provided by welds and properly attached reinforcement. [See para. 304.3.3(f).] Weld areas shall be based on the minimum dimensions specified in para. 328.5.4, except that larger dimensions may be used if the welder has been specifically instructed to make the welds to those dimensions.

(d) Reinforcement Zone. The reinforcement zone is a parallelogram whose length extends a distance of d_2 on each side of the centerline of the branch pipe and whose width starts at the inside surface of the run pipe (in its corroded condition) and extends beyond the outside surface of the run pipe a perpendicular distance L_4.

(e) Multiple Branches. When two or more branch connections are so closely spaced that their reinforcement zones overlap, the distance between centers of the openings should be at least $1\frac{1}{2}$ times their average diameter, and the area of reinforcement between any two openings shall be not less than 50% of the total that both require. Each opening shall have adequate reinforcement in accordance with paras. 304.3.3(b) and (c). No part of the metal cross section may apply to more than one opening or be evaluated more than once in any combined area. (Consult PFI Standard ES-7 for detailed recommendations on spacing of welded nozzles.)

(f) Added Reinforcement

(1) Reinforcement added in the form of a ring or saddle as part of area A_4 shall be of reasonably constant width.

(2) Material used for reinforcement may differ from that of the run pipe provided it is compatible with run and branch pipes with respect to weldability, heat treatment requirements, galvanic corrosion, thermal expansion, etc.

(3) If the allowable stress for the reinforcement material is less than that for the run pipe, its calculated area must be reduced in the ratio of allowable stress values in determining its contribution to area A_4.

(4) No additional credit may be taken for a material having higher allowable stress value than the run pipe.

304.3.4 Reinforcement of Extruded Outlet Headers

(a) The principles of reinforcement stated in para. 304.3.3 are essentially applicable to extruded outlet headers. An extruded outlet header is a length of pipe in which one or more outlets for branch connection have been formed by extrusion, using a die or dies to control the radii of the extrusion. The extruded outlet projects above the surface of the header a distance h_x at least equal to the external radius of the outlet r_x (i.e., $h_x \geq r_x$).

(b) The rules in para. 304.3.4 are minimum requirements, valid only within the limits of geometry shown in Fig. 304.3.4, and only where the axis of the outlet intersects and is perpendicular to the axis of the header. Where these requirements are not met, or where nonintegral material such as a ring, pad, or saddle has been added to the outlet, pressure design shall be qualified as required by para. 304.7.2.

(c) Nomenclature. The nomenclature used herein is illustrated in Fig. 304.3.4. Note the use of subscript x signifying extruded. Refer to para. 304.3.3(a) for nomenclature not listed here.

Copyright ASME International
Provided by IHS under license with ASME
No reproduction or networking permitted without license from IHS
Not for Resale

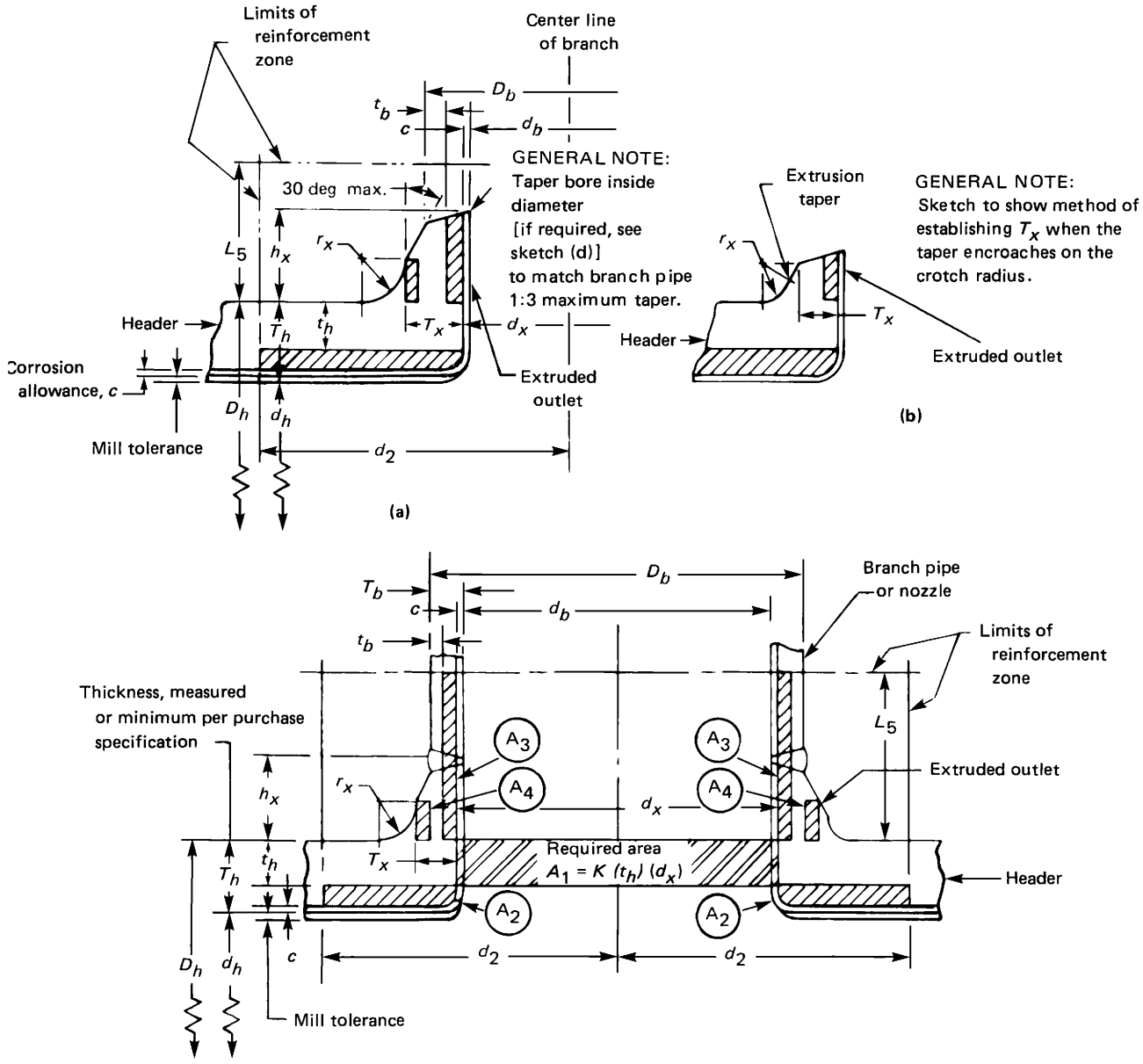

Fig. 304.3.4 Extruded Outlet Header Nomenclature

This Figure illustrates the nomenclature of para. 304.3.4. It does not indicate complete details or a preferred method of construction.

Copyright ASME International
Provided by IHS under license with ASME
No reproduction or networking permitted without license from IHS
Not for Resale

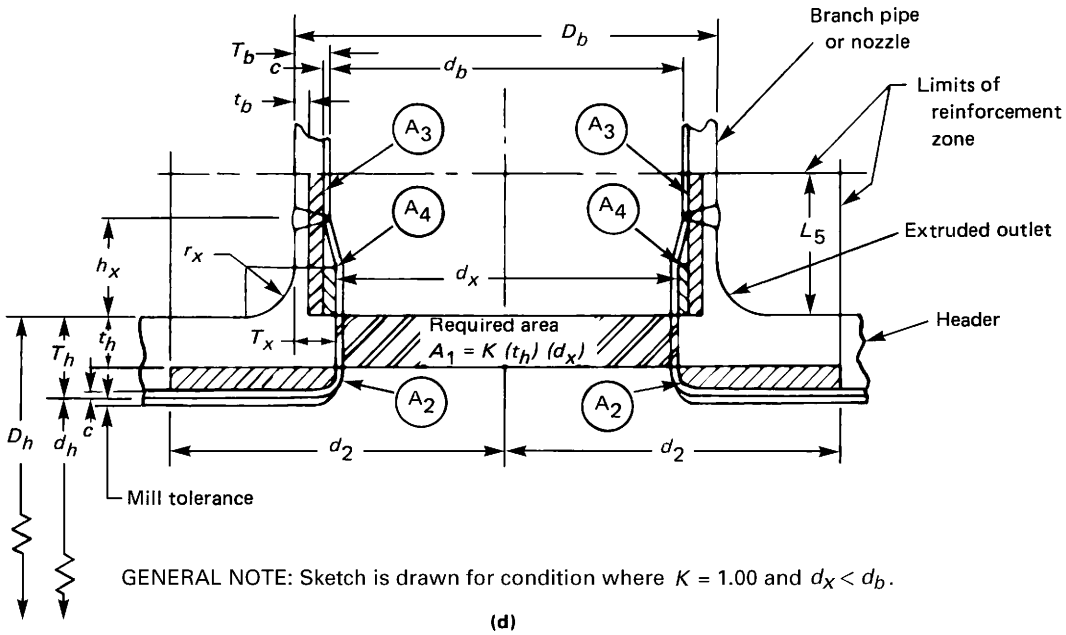

Fig. 304.3.4 Extruded Outlet Header Nomenclature (Cont'd)
This Figure illustrates the nomenclature of para. 304.3.4. It does not indicate complete details or a preferred method of construction.

d_x = the design inside diameter of the extruded outlet, measured at the level of the outside surface of the header. This dimension is taken after removal of all mechanical and corrosion allowances, and all thickness tolerances.
d_2 = half width of reinforcement zone (equal to d_x)
h_x = height of the extruded outlet. This must be equal to or greater than r_x [except as shown in sketch (b) in Fig. 304.3.4].
L_5 = height of reinforcement zone
$= 0.7\sqrt{D_b T_x}$
r_x = radius of curvature of external contoured portion of outlet, measured in the plane containing the axes of the header and branch
T_x = corroded finished thickness of extruded outlet, measured at a height equal to r_x above the outside surface of the header

(d) Limitations on Radius r_x. The external contour radius r_x is subject to the following limitations.

(1) minimum r_x: the lesser of $0.05D_b$ or 38 mm (1.50 in.)

(2) maximum r_x shall not exceed

(a) for $D_b <$ DN 200 (NPS 8), 32 mm (1.25 in.)

(b) for $D_b \geq$ DN 200, $0.1D_b$ + 13 mm (0.50 in.)

(3) for an external contour with multiple radii, the requirements of (1) and (2) above apply, considering the best-fit radius over a 45 deg arc as the maximum radius

(4) machining shall not be employed in order to meet the above requirements

(e) Required Reinforcement Area. The required area of reinforcement is defined by

$$A_1 = Kt_h d_x \tag{9}$$

where K is determined as follows:

(1) For $D_b/D_h > 0.60$, $K = 1.00$.

(2) For $0.60 \geq D_b/D_h > 0.15$, $K = 0.6 + \frac{2}{3}(D_b/D_h)$.

(3) For $D_b/D_h \leq 0.15$, $K = 0.70$.

(f) Available Area. The area available for reinforcement is defined as

$$A_2 + A_3 + A_4 \geq A_1 \tag{9a}$$

These areas are all within the reinforcement zone and are further defined below.

(1) Area A_2 is the area resulting from excess thickness in the header wall:

$$A_2 = (2d_2 - d_x)\,(T_h - t_h - c) \tag{10}$$

(2) Area A_3 is the area resulting from excess thickness in the branch pipe wall:

$$A_3 = 2L_5(T_b - t_b - c) \tag{11}$$

(3) Area A_4 is the area resulting from excess thickness in the extruded outlet lip: (04)

$$A_4 = 2r_x[T_x - (T_b - c)] \tag{12}$$

(g) Reinforcement of Multiple Openings. The rules of para. 304.3.3(e) shall be followed except that the required

Copyright ASME International
Provided by IHS under license with ASME
No reproduction or networking permitted without license from IHS
Not for Resale

area and reinforcement area shall be as given in para. 304.3.4.

(h) Identification. The manufacturer shall establish the design pressure and temperature for each extruded outlet header and shall mark the header with this information, together with the symbol "B31.3" (indicating the applicable Code Section) and the manufacturer's name or trademark.

304.3.5 Additional Design Considerations. The requirements of paras. 304.3.1 through 304.3.4 are intended to ensure satisfactory performance of a branch connection subject only to pressure. The designer shall also consider the following:

(a) In addition to pressure loadings, external forces and movements are applied to a branch connection by thermal expansion and contraction, dead and live loads, and movement of piping terminals and supports. Special consideration shall be given to the design of a branch connection to withstand these forces and movements.

(b) Branch connections made by welding the branch pipe directly to the run pipe should be avoided under the following circumstances.

(1) when branch size approaches run size, particularly if pipe formed by more than 1.5% cold expansion, or expanded pipe of a material subject to work hardening, is used as the run pipe

(2) where repetitive stresses may be imposed on the connection by vibration, pulsating pressure, temperature cycling, etc.

In such cases, it is recommended that the design be conservative and that consideration be given to the use of tee fittings or complete encirclement types of reinforcement.

(c) Adequate flexibility shall be provided in a small line which branches from a large run, to accommodate thermal expansion and other movements of the larger line (see para. 319.6).

(d) If ribs, gussets, or clamps are used to stiffen the branch connection, their areas cannot be counted as contributing to the reinforcement area determined in para. 304.3.3(c) or 304.3.4(f). However, ribs or gussets may be used for pressure-strengthening a branch connection in lieu of reinforcement covered in paras. 304.3.3 and 304.3.4 if the design is qualified as required by para. 304.7.2.

(e) For branch connections which do not meet the requirements of para. 304.3.1(b), integral reinforcement, complete encirclement reinforcement, or other means of reinforcement should be considered.

304.3.6 Branch Connections Under External Pressure. Pressure design for a branch connection subjected to external pressure may be determined in accordance with para. 304.3.1, using the reinforcement area requirement stated in para. 304.3.3(b).

Table 304.4.1 BPV Code References for Closures

Type of Closure	Concave to Pressure	Convex to Pressure
Ellipsoidal	UG-32(d)	UG-33(d)
Torispherical	UG-32(e)	UG-33(e)
Hemispherical	UG-32(f)	UG-33(c)
Conical (no transition to knuckle)	UG-32(g)	UG-33(f)
Toriconical	UG-32(h)	UG-33(f)
Flat (pressure on either side)	UG-34	

GENERAL NOTE: Paragraph numbers are from the BPV Code, Section VIII, Division 1.

304.4 Closures

304.4.1 General

(a) Closures not in accordance with para. 303 or 304.4.1(b) shall be qualified as required by para. 304.7.2.

(b) For materials and design conditions covered therein, closures may be designed in accordance with the rules in the BPV Code, Section VIII, Division 1, calculated from Eq. (13): (04)

$$t_m = t + c \quad (13)$$

where

c = sum of allowances defined in para. 304.1.1

t = pressure design thickness, calculated for the type of closure and direction of loading, shown in Table 304.4.1, except that the symbols used to determine t shall be:

E = same as defined in para. 304.1.1

P = design gage pressure

S = S times W, with S and W as defined in para. 304.1.1

t_m = minimum required thickness, including mechanical, corrosion, and erosion allowance

304.4.2 Openings in Closures

(a) The rules in paras. 304.4.2(b) through (g) apply to openings not larger than one-half the inside diameter of the closure as defined in Section VIII, Division 1, UG-36. A closure with a larger opening should be designed as a reducer in accordance with para. 304.6 or, if the closure is flat, as a flange in accordance with para. 304.5.

(b) A closure is weakened by an opening and, unless the thickness of the closure is sufficiently in excess of that required to sustain pressure, it is necessary to provide added reinforcement. The need for and amount of reinforcement required shall be determined in accordance with the subparagraphs below except that it shall be considered that the opening has adequate reinforcement if the outlet connection meets the requirements in para. 304.3.2(b) or (c).

(c) Reinforcement for an opening in a closure shall be so distributed that reinforcement area on each side of

Copyright ASME International
Provided by IHS under license with ASME
No reproduction or networking permitted without license from IHS Not for Resale

an opening (considering any plane through the center of the opening normal to the surface of the closure) will equal at least one-half the required area in that plane.

(d) The total cross-sectional area required for reinforcement in any given plane passing through the center of the opening shall not be less than that defined in UG-37(b), UG-38, and UG-39.

(e) The reinforcement area and reinforcement zone shall be calculated in accordance with para. 304.3.3 or 304.3.4, considering the subscript h and other references to the run or header pipe as applying to the closure. Where the closure is curved, the boundaries of the reinforcement zone shall follow the contour of the closure, and dimensions of the reinforcement zone shall be measured parallel to and perpendicular to the closure surface.

(f) If two or more openings are to be located in a closure, the rules in paras. 304.3.3 and 304.3.4 for the reinforcement of multiple openings apply.

(g) The additional design considerations for branch connections discussed in para. 304.3.5 apply equally to openings in closures.

304.5 Pressure Design of Flanges and Blanks

304.5.1 Flanges — General

(a) Flanges not in accordance with para. 303 or 304.5.1(b) or (c) shall be qualified as required by para. 304.7.2.

(04) *(b)* A flange may be designed in accordance with the BPV Code, Section VIII, Division 1, Appendix 2, using the allowable stresses and temperature limits of the B31.3 Code. Nomenclature shall be as defined in Appendix 2, except as follows:

P = design gage pressure
S_a = bolt design stress at atmospheric temperature
S_b = bolt design stress at design temperature
S_f = product SEW [of the stress value S, the appropriate quality factor E from Table A-1A or A-1B, and weld joint strength reduction factor per para. 302.3.5(e)] for flange or pipe material. See para. 302.3.2(e).

(c) The rules in (b) above are not applicable to a flanged joint having a gasket which extends outside the bolts (usually to the outside diameter of the flange). For flanges which make solid contact outside the bolts, Section VIII, Division 1, Appendix Y should be used.

(d) See Section VIII, Division 1, Appendix S, for considerations applicable to bolted joint assembly.

304.5.2 Blind Flanges

(a) Blind flanges not in accordance with para. 303 or 304.5.2(b) shall be qualified as required by para. 304.7.2.

(b) A blind flange may be designed in accordance with Eq. (14). The minimum thickness, considering the manufacturer's minus tolerance, shall be not less than t_m:

$$t_m = t + c \tag{14}$$

To calculate t, the rules of Section VIII, Division 1, UG-34 may be used with the following changes in nomenclature:

c = sum of allowances defined in para. 304.1.1
P = internal or external design gage pressure
S_f = product SE (of the stress value S and the appropriate quality factor E from Table A-1A or A-1B) for flange material. See para. 302.3.2(e).
t = pressure design thickness, as calculated for the given styles of blind flange, using the appropriate equations for bolted flat cover plates in UG-34

304.5.3 Blanks. The minimum required thickness of (04) a permanent blank (representative configurations shown in Fig. 304.5.3) shall be calculated in accordance with Eq. (15):

$$t_m = d_g \sqrt{\frac{3P}{16SE}} + c \tag{15}$$

where

c = sum of allowances defined in para. 304.1.1
d_g = inside diameter of gasket for raised or flat face flanges, or the gasket pitch diameter for ring joint and fully retained gasketed flanges
E = same as defined in para. 304.1.1
P = design gage pressure
S = same as defined in para. 304.1.1
W = same as defined in para. 304.1.1

304.6 Reducers

304.6.1 Concentric Reducers

(a) Concentric reducers not in accordance with para. 303 or 304.6.1(b) shall be qualified as required by para. 304.7.2.

(b) Concentric reducers made in a conical or reversed curve section, or a combination of such sections, may be designed in accordance with the rules for conical and toriconical closures stated in para. 304.4.1.

304.6.2 Eccentric Reducers. Eccentric reducers not in accordance with para. 303 shall be qualified as required by para. 304.7.2.

304.7 Pressure Design of Other Components

304.7.1 Listed Components. Other pressure containing components manufactured in accordance with standards in Table 326.1 may be utilized in accordance with para. 303.

304.7.2 Unlisted Components and Elements. Pressure design of unlisted components and other piping elements, to which the rules elsewhere in para. 304 do not apply, shall be based on calculations consistent with the design criteria of this Code. These calculations shall be

Copyright ASME International
Provided by IHS under license with ASME
No reproduction or networking permitted without license from IHS
Not for Resale

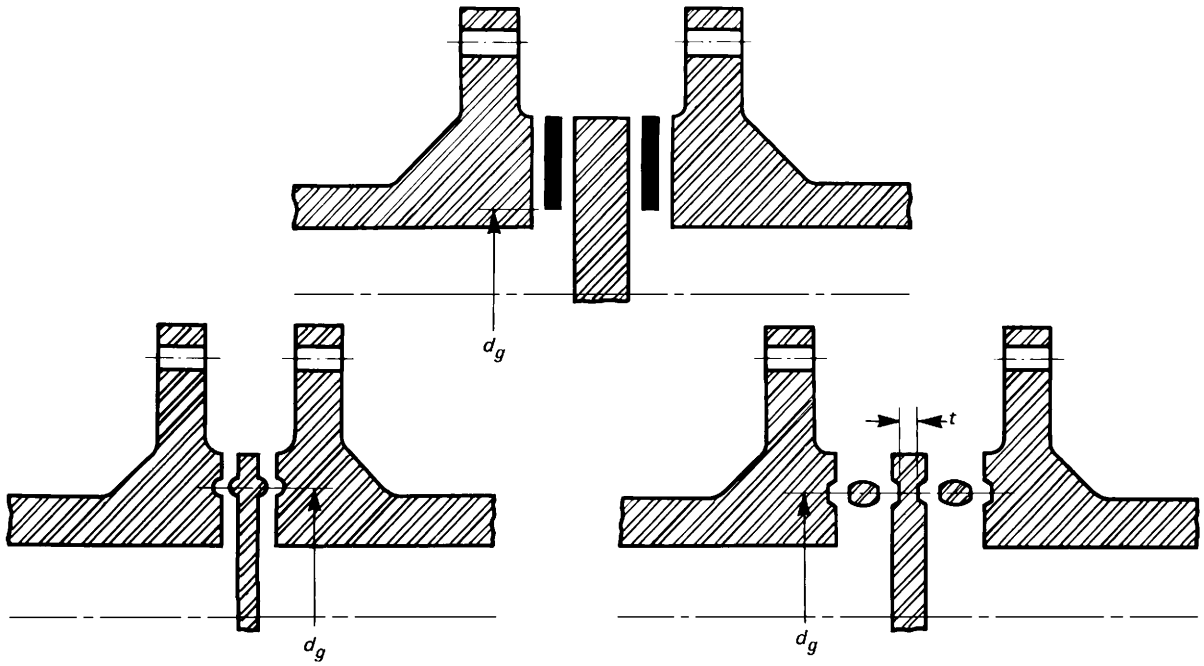

Fig. 304.5.3 Blanks

substantiated by one or more of the means stated in paras. 304.7.2(a), (b), (c), and (d), considering applicable dynamic, thermal, and cyclic effects in paras. 301.4 through 301.10, as well as thermal shock. Calculations and documentation showing compliance with paras. 304.7.2(a), (b), (c), or (d), and (e) shall be available for the owner's approval

(a) extensive, successful service experience under comparable conditions with similarly proportioned components of the same or like material.

(b) experimental stress analysis, such as described in the BPV Code, Section VIII, Division 2, Appendix 6.

(c) proof test in accordance with either ASME B16.9, MSS SP-97, or Section VIII, Division 1, UG-101.

(d) detailed stress analysis (e.g., finite element method) with results evaluated as described in Section VIII, Division 2, Appendix 4, Article 4-1. The basic allowable stress from Table A-1 shall be used in place of S_m in Division 2. At design temperatures in the creep range, additional considerations beyond the scope of Division 2 may be necessary.

(e) For any of the above, the designer may interpolate between sizes, wall thicknesses, and pressure classes, and may determine analogies among related materials.

304.7.3 Metallic Components With Nonmetallic Pressure Parts. Components not covered by standards listed in Table 326.1, in which both metallic and nonmetallic parts contain the pressure, shall be evaluated by applicable requirements of para. A304.7.2 as well as those of para. 304.7.2.

304.7.4 Expansion Joints

(a) Metallic Bellows Expansion Joints. The design of bellows type expansion joints shall be in accordance with Appendix X. See also Appendix F, para. F304.7.4 for further design considerations.

(b) Slip Type Expansion Joints

(1) Pressure containing elements shall be in accordance with para. 318 and other applicable requirements of this Code.

(2) External piping loads shall not impose excessive bending on the joint.

(3) The effective pressure thrust area shall be computed using the outside diameter of the pipe.

(c) Other Types of Expansion Joint. The design of other types of expansion joint shall be qualified as required by para. 304.7.2.

PART 3
FLUID SERVICE REQUIREMENTS FOR PIPING COMPONENTS

305 PIPE

Pipe includes components designated as "tube" or "tubing" in the material specification, when intended for pressure service.

305.1 General

Listed pipe may be used in Normal Fluid Service except as stated in paras. 305.2.1 and 305.2.2. Unlisted pipe may be used only as provided in para. 302.2.3.

Copyright ASME International
Provided by IHS under license with ASME
No reproduction or networking permitted without license from IHS
Not for Resale

305.2 Specific Requirements

305.2.1 Pipe for Category D Fluid Service. The following carbon steel pipe may be used only for Category D Fluid Service:

API 5L, Furnace Butt-Welded
ASTM A 53, Type F
ASTM A 134 made from other than ASTM A 285 plate

305.2.2 Pipe Requiring Safeguarding. When used for other than Category D Fluid Service, the following carbon steel pipe shall be safeguarded:

ASTM A 134 made from ASTM A 285 plate
ASTM A 139

305.2.3 Pipe for Severe Cyclic Conditions. Only the following pipe[7] may be used under severe cyclic conditions:

(a) Carbon Steel Pipe
API 5L, Grade A or B, seamless
API 5L, Grade A or B, SAW, str. seam, $E_j \geq 0.95$
API 5L, Grade X42, seamless
API 5L, Grade X46, seamless
API 5L, Grade X52, seamless
API 5L, Grade X56, seamless
API 5L, Grade X60, seamless
ASTM A 53, seamless
ASTM A 106
ASTM A 333, seamless
ASTM A 369
ASTM A 381, $E_j \geq 0.90$
ASTM A 524
ASTM A 671, $E_j \geq 0.90$
ASTM A 672, $E_j \geq 0.90$
ASTM A 691, $E_j \geq 0.90$

(b) Low and Intermediate Alloy Steel Pipe
ASTM A 333, seamless
ASTM A 335
ASTM A 369
ASTM A 426, $E_c \geq 0.90$
ASTM A 671, $E_j \geq 0.90$
ASTM A 672, $E_j \geq 0.90$
ASTM A 691, $E_j \geq 0.90$

(c) Stainless Steel Alloy Pipe
ASTM A 268, seamless
ASTM A 312, seamless
ASTM A 358, $E_j \geq 0.90$
ASTM A 376
ASTM A 451, $E_c \geq 0.90$

(d) Copper and Copper Alloy Pipe
ASTM B 42
ASTM B 466

(e) Nickel and Nickel Alloy Pipe
ASTM B 161
ASTM B 165
ASTM B 167
ASTM B 407

(f) Aluminum Alloy Pipe
ASTM B 210, Tempers O and H112
ASTM B 241, Tempers O and H112

[7] Casting or joint factors E_c or E_j specified for cast or welded pipe which do not correspond with E factors in Table A-1A or A-1B are established in accordance with paras. 302.3.3 and 302.3.4.

306 FITTINGS, BENDS, MITERS, LAPS, AND BRANCH CONNECTIONS

Fittings, bends, miters, laps, and branch connections may be used in accordance with paras. 306.1 through 306.5. Pipe and other materials used in such components shall be suitable for the manufacturing or fabrication process and the fluid service.

306.1 Pipe Fittings

306.1.1 Listed Fittings. Listed fittings may be used in Normal Fluid Service in accordance with para. 303.

306.1.2 Unlisted Fittings. Unlisted fittings may be used only in accordance with para. 302.2.3.

306.1.3 Specific Fittings

(a) Proprietary welding branch outlet fittings which have been design proof tested successfully as prescribed in ASME B16.9, MSS SP-97 or the BPV Code, Section VIII, Division 1, UG-101 may be used within their established ratings.

(b) The lap thickness of a proprietary "Type C" lap-joint stub-end buttwelding fitting shall conform to the requirements of para. 306.4.2 for flared laps.

306.1.4 Fittings for Severe Cyclic Conditions

(a) Only the following fittings may be used under severe cyclic conditions:

(1) forged
(2) wrought, with factor $E_j \geq 0.90$,[8] or
(3) cast, with factor $E_c \geq 0.90$[8]

(b) Fittings conforming to MSS SP-43, MSS SP-119, and proprietary "Type C" lap-joint stub-end welding fittings shall not be used under severe cyclic conditions.

306.2 Pipe Bends

306.2.1 General (04)

(a) A pipe bend made in accordance with paras. 332.2.1 and 332.2.2, and verified for pressure design in accordance with para. 304.2.1, is suitable for the same service as the pipe from which it is made.

(b) A pipe bend made in accordance with para. 332.2.2, but not meeting the flattening limits of para. 332.2.1, may be qualified for pressure design by para.

[8] See paras. 302.3.3 and 302.3.4.

Copyright ASME International
Provided by IHS under license with ASME
No reproduction or networking permitted without license from IHS
Not for Resale

304.7.2 and shall not exceed the rating of the straight pipe from which it is made.

306.2.2 Corrugated and Other Bends. Bends of other designs (such as creased or corrugated) shall be qualified for pressure design as required by para. 304.7.2.

306.2.3 Bends for Severe Cyclic Conditions. A pipe bend designed as creased or corrugated shall not be used under severe cyclic conditions.

306.3 Miter Bends

306.3.1 General. Except as stated in para. 306.3.2, a miter bend made in accordance with para. 304.2.3 and welded in accordance with para. 311.1 is suitable for use in Normal Fluid Service.

306.3.2 Miter Bends for Category D Fluid Service. A miter bend which makes a change in direction at a single joint (angle α in Fig. 304.2.3) greater than 45 deg, or is welded in accordance with para. 311.2.1, may be used only for Category D Fluid Service.

306.3.3 Miter Bends for Severe Cyclic Conditions. A miter bend to be used under severe cyclic conditions shall be made in accordance with para. 304.2.3 and welded in accordance with para. 311.2.2, and shall have an angle α (see Fig. 304.2.3) $\leq$ 22.5 deg.

306.4 Laps

The following requirements do not apply to fittings conforming to para. 306.1, specifically lap-joint stub ends conforming to ASME B16.9, nor to laps integrally hot-forged on pipe ends, except as noted in paras. 306.4.3 and 306.4.4(a).

306.4.1 Fabricated Laps. A fabricated lap is suitable for use in Normal Fluid Service, provided that all of the following requirements are met.

(a) The outside diameter of the lap shall be within the dimensional tolerances of the corresponding ASME B16.9 lap-joint stub end.

(b) The lap thickness shall be at least equal to the nominal wall thickness of the pipe to which it is attached.

(04) *(c)* The lap material shall have an allowable stress at least as great as that of the pipe.

(d) Welding shall be in accordance with para. 311.1 and fabrication shall be in accordance with para. 328.5.5.

306.4.2 Flared Laps. See para. 308.2.5 for requirements of lapped flanges for use with flared laps. A flared lap is suitable for use in Normal Fluid Service, provided that all of the following requirements are met.

(04) *(a)* The pipe used shall be of a specification and grade suitable for forming without cracks, surface buckling, or other defects.

(b) The outside diameter of the lap shall be within the dimensional tolerances of the corresponding ASME B16.9 lap-joint stub end.

(c) The radius of fillet shall not exceed 3 mm ($\frac{1}{8}$ in.).

(d) The lap thickness at any point shall be at least 95% of the minimum pipe wall thickness T multiplied by the ratio of the pipe outside diameter to the diameter at which the lap thickness is measured.

(e) Pressure design shall be qualified as required by para. 304.7.2.

306.4.3 Forged Laps. A lap integrally hot-forged on a pipe end is suitable for Normal Fluid Service only when the requirements of para. 332 are met. Its dimensions shall conform to those for lap-joint stub ends given in ASME B16.9.

306.4.4 Laps for Severe Cyclic Conditions

(a) A forged lap-joint stub end per para. 306.1 or a lap integrally hot-forged on a pipe end per para. 306.4.3 may be used under severe cyclic conditions.

(b) A fabricated lap to be used under severe cyclic conditions shall conform to the requirements of para. 306.4.1, except that welding shall be in accordance with para. 311.2.2. A fabricated lap shall conform to a detail shown in Fig. 328.5.5, sketch (d) or (e).

(c) A flared lap is not permitted under severe cyclic conditions.

306.5 Fabricated Branch Connections

The following requirements do not apply to fittings conforming to para. 306.1.

306.5.1 General. A fabricated branch connection made and verified for pressure design in accordance with para. 304.3, and welded in accordance with para. 311.1, is suitable for use in Normal Fluid Service.

306.5.2 Fabricated Branch Connections for Severe Cyclic Conditions. A fabricated branch connection to be used under severe cyclic conditions shall conform to the requirements of para. 306.5.1, except that welding shall be in accordance with para. 311.2.2, with fabrication limited to a detail equivalent to Fig. 328.5.4D sketch (2) or (4), or to Fig. 328.5.4E.

307 VALVES AND SPECIALTY COMPONENTS

The following requirements for valves shall also be met as applicable by other pressure containing piping components, such as traps, strainers, and separators. See also Appendix F, paras. F301.4 and F307.

307.1 General

307.1.1 Listed Valves. A listed valve is suitable for use in Normal Fluid Service, except as stated in para. 307.2.

307.1.2 Unlisted Valves. Unlisted valves may be used only in accordance with para. 302.2.3. Unless pressure-temperature ratings are established by the method set

Copyright ASME International
Provided by IHS under license with ASME
No reproduction or networking permitted without license from IHS Not for Resale

Table 308.2.1 Permissible Sizes/Rating Classes for Slip-On Flanges Used as Lapped Flanges

Rating		Maximum Flange Size	
PN	Class	DN	NPS
20	150	300	12
50	300	200	8

GENERAL NOTE: Actual thickness of flange at bolt circle shall at least equal minimum required flange thickness in ASME B16.5.

forth in Appendix F to ASME B16.34, pressure design shall be qualified as required by para. 304.7.2.

307.2 Specific Requirements

A bolted bonnet valve whose bonnet is secured to the body by less than four bolts, or by a U-bolt, may be used only for Category D Fluid Service.

308 FLANGES, BLANKS, FLANGE FACINGS, AND GASKETS

308.1 General

308.1.1 Listed Components. A listed flange, blank, or gasket is suitable for use in Normal Fluid Service, except as stated elsewhere in para. 308.

308.1.2 Unlisted Components. Unlisted flanges, blanks, and gaskets may be used only in accordance with para. 302.2.3.

308.2 Specific Requirements for Flanges

See Appendix F, paras. F308.2 and F312.

308.2.1 Slip-On Flanges

(a) A slip-on flange shall be double-welded as shown in Fig. 328.5.2B when the service is

(1) subject to severe erosion, crevice corrosion, or cyclic loading

(2) flammable, toxic, or damaging to human tissue

(3) under severe cyclic conditions

(4) at temperatures below −101°C (−150°F)

(b) The use of slip-on flanges should be avoided where many large temperature cycles are expected, particularly if the flanges are not insulated.

(c) Slip-on Flanges as Lapped Flanges. A slip-on flange may be used as a lapped flange only as shown in Table 308.2.1 unless pressure design is qualified in accordance with para. 304.5.1. A corner radius or bevel shall conform to one of the following as applicable:

(1) For an ASME B16.9 lap joint stub end or a forged lap (see para. 306.4.3) the corner radius shall be as specified in ASME B16.5, Tables 9 and 12, dimension *r*.

(2) For a fabricated lap, the corner bevel shall be at least half the nominal thickness of the pipe to which the lap is attached (see Fig. 328.5.5).

(3) For a flared lap see para. 308.2.5.

308.2.2 Expanded-Joint Flanges. A flange having an expanded-joint insert is subject to the requirements for expanded joints in para. 313.

308.2.3 Socket Welding and Threaded Flanges. A socket welding flange is subject to the requirements for socket welds in para. 311.2.4. A threaded flange is subject to the requirements for threaded joints in para. 314.4.

308.2.4 Flanges for Severe Cyclic Conditions. Unless it is safeguarded, a flange to be used under severe cyclic conditions shall be welding neck conforming to ASME B16.5 or ASME B16.47, or a similarly proportioned flange designed in accordance with para. 304.5.1.

308.2.5 Flanges for Flared Metallic Laps. For a flange used with a flared metallic lap (para. 306.4.2), the intersection of face and bore shall be beveled or rounded approximately 3 mm ($\frac{1}{8}$ in.). See also para. 308.2.1(c).

308.3 Flange Facings

The flange facing shall be suitable for the intended service and for the gasket and bolting employed.

308.4 Gaskets

Gaskets shall be selected so that the required seating load is compatible with the flange rating and facing, the strength of the flange, and its bolting. Materials shall be suitable for the service conditions. See also Appendix F, para. F308.4.

309 BOLTING

Bolting includes bolts, bolt studs, studs, cap screws, nuts, and washers. See also Appendix F, para. F309.

309.1 General

309.1.1 Listed Bolting. Listed bolting is suitable for use in Normal Fluid Service, except as stated elsewhere in para. 309.

309.1.2 Unlisted Bolting. Unlisted bolting may be used only in accordance with para. 302.2.3.

309.1.3 Bolting for Components. Bolting for components conforming to a listed standard shall be in accordance with that standard if specified therein.

309.1.4 Selection Criteria. Bolting selected shall be adequate to seat the gasket and maintain joint tightness under all design conditions.

309.2 Specific Bolting

309.2.1 Low Yield Strength Bolting. Bolting having not more than 207 MPa (30 ksi) specified minimum yield strength shall not be used for flanged joints rated ASME B16.5 PN 68 (Class 400) and higher, nor for flanged joints using metallic gaskets, unless calculations have been

Copyright ASME International
Provided by IHS under license with ASME
No reproduction or networking permitted without license from IHS
Not for Resale

made showing adequate strength to maintain joint tightness.

309.2.2 Carbon Steel Bolting. Except where limited by other provisions of this Code, carbon steel bolting may be used with nonmetallic gaskets in flanged joints rated ASME B16.5 PN 50 (Class 300) and lower for bolt metal temperatures at −29°C to 204°C (−20°F to 400°F), inclusive. If these bolts are galvanized, heavy hexagon nuts, threaded to suit, shall be used.

309.2.3 Bolting for Metallic Flange Combinations. Any bolting which meets the requirements of para. 309 may be used with any combination of flange material and facing. If either flange is to the ASME B16.1, ASME B16.24, MSS SP-42, or MSS SP-51 specification, the bolting material shall be no stronger than low yield strength bolting unless:

(a) both flanges have flat faces and a full face gasket is used, or

(b) sequence and torque limits for bolt-up are specified, with consideration of sustained loads, displacement strains, and occasional loads (see paras. 302.3.5 and 302.3.6), and strength of the flanges.

309.2.4 Bolting for Severe Cyclic Conditions. Low yield strength bolting (see para. 309.2.1) shall not be used for flanged joints under severe cyclic conditions.

309.3 Tapped Holes

Tapped holes for pressure retaining bolting in metallic piping components shall be of sufficient depth that the thread engagement will be at least seven-eighths times the nominal thread diameter.

PART 4
FLUID SERVICE REQUIREMENTS FOR PIPING JOINTS

310 GENERAL

Piping joints shall be selected to suit the piping material and the fluid service, with consideration of joint tightness and mechanical strength under expected service and test conditions of pressure, temperature, and external loading.

311 WELDED JOINTS

Joints may be made by welding in any material for which it is possible to qualify welding procedures, welders, and welding operators in conformance with the rules in Chapter V.

311.1 General

Except as provided in paras. 311.2.1 and 311.2.2, welds shall conform to the following:

(a) Welding shall be in accordance with para. 328.

(b) Preheating and heat treatment shall be in accordance with paras. 330 and 331, respectively.

(c) Examination shall be in accordance with para. 341.4.1.

(d) Acceptance criteria shall be those in Table 341.3.2 for Normal Fluid Service.

311.2 Specific Requirements

311.2.1 Welds for Category D Fluid Service. Welds which meet the requirements of para. 311.1, but for which examination is in accordance with para. 341.4.2, and acceptance criteria are those in Table 341.3.2 for Category D Fluid Service, may be used only in that service.

311.2.2 Welds for Severe Cyclic Conditions. Welds for use under severe cyclic conditions shall meet the requirements of para. 311.1 with the exceptions that examination shall be in accordance with para. 341.4.3, and acceptance criteria shall be those in Table 341.3.2 for severe cyclic conditions.

311.2.3 Backing Rings and Consumable Inserts

(a) If a backing ring is used where the resulting crevice is detrimental (e.g., subject to corrosion, vibration, or severe cyclic conditions), it should be removed and the internal joint face ground smooth. When it is impractical to remove the backing ring in such a case, consideration shall be given to welding without backing rings or to the use of consumable inserts or removable nonmetallic backing rings.

(b) Split backing rings shall not be used under severe cyclic conditions.

311.2.4 Socket Welds

(a) Socket welded joints (para. 328.5.2) should be avoided in any service where crevice corrosion or severe erosion may occur.

(b) Socket welded joints shall conform to the following.

(1) Socket dimensions shall conform to ASME B16.5 for flanges and ASME B16.11 or MSS SP-119 for other socket-welding components.

(2) Weld dimensions shall not be less than those shown in Figs. 328.5.2B and 328.5.2C.

(c) Socket welds larger than DN 50 (NPS 2) shall not be used under severe cyclic conditions.

(d) A drain or bypass in a component may be attached by socket welding, provided the socket dimensions conform to Fig. 4 in ASME B16.5.

311.2.5 Fillet Welds

(a) Fillet welds in accordance with para. 328.5.2 may be used as primary welds to attach socket welding components and slip-on flanges.

(b) Fillet welds may also be used to attach reinforcement and structural attachments, to supplement the

Copyright ASME International
Provided by IHS under license with ASME
No reproduction or networking permitted without license from IHS Not for Resale

strength or reduce stress concentration of primary welds, and to prevent disassembly of joints.

311.2.6 Seal Welds. Seal welds (para. 328.5.3) may be used only to prevent leakage of threaded joints and shall not be considered as contributing any strength to the joints.

312 FLANGED JOINTS

312.1 Joints Using Flanges of Different Ratings

Where flanges of different ratings are bolted together, the rating of the joint shall not exceed that of the lower rated flange. Bolting torque shall be limited so that excessive loads will not be imposed on the lower rated flange in obtaining a tight joint.

312.2 Metal to Nonmetal Flanged Joints

Where a metallic flange is bolted to a nonmetallic flange, both should be flat-faced. A full-faced gasket is preferred. If a gasket extending only to the inner edge of the bolts is used, bolting torque shall be limited so that the nonmetallic flange is not overloaded.

313 EXPANDED JOINTS

(a) Expanded joints shall not be used under severe cyclic conditions. For other services, adequate means shall be provided to prevent separation of the joint. If the fluid is toxic or damaging to human tissue, safeguarding is required.

(b) Consideration shall be given to the tightness of expanded joints when subjected to vibration, differential expansion or contraction due to temperature cycling, or external mechanical loads.

314 THREADED JOINTS

314.1 General

Threaded joints are suitable for Normal Fluid Service except as stated elsewhere in para. 314. They may be used under severe cyclic conditions only as provided in paras. 314.2.1(c) and 314.2.2.

(a) Threaded joints should be avoided in any service where crevice corrosion, severe erosion, or cyclic loading may occur.

(b) When threaded joints are intended to be seal welded, thread sealing compound shall not be used.

(c) Layout of piping employing threaded joints should, insofar as possible, minimize stress on joints, giving special consideration to stresses due to thermal expansion and operation of valves (particularly a valve at a free end). Provision should be made to counteract forces that would tend to unscrew the joints.

Table 314.2.1 Minimum Thickness of Male Threaded Components

Fluid Service	Notch-Sensitive Material	Size Range [Note (1)] DN	Size Range [Note (1)] NPS	Min. Wall Thickness [Note (2)]
Normal	Yes [Note (3)]	≤ 40	≤ 1½	Sch. 80
		50	2	Sch. 40
		65–150	2½–6	Sch. 40
Normal	No [Note (4)]	≤ 50	≤ 2	Sch. 40S
		65–150	2½–6	Sch. 40S
Category D	Either	≤ 300	≤ 12	Per para. 304.1.1

GENERAL NOTE: Use the greater of para. 304.1.1 or thickness shown in this Table.

NOTES:

(1) For sizes > DN 50 (NPS 2), the joint shall be safeguarded (see Appendix G) for a fluid service that is flammable, toxic, or damaging to human tissue.

(2) Nominal wall thicknesses is listed for Sch. 40 and 80 in ASME B36.10M and for Sch. 40S in ASME B36.19M.

(3) For example, carbon steel.

(4) For example, austenitic stainless steel.

(d) Except for specially designed joints employing lens rings or similar gaskets, threaded flanges in which the pipe ends project through to serve as the gasket surface may be used only for Category D Fluid Service.

314.2 Specific Requirements

314.2.1 Taper-Threaded Joints. Requirements in (a) through (c) below apply to joints in which the threads of both mating components conform to ASME B1.20.1.

(a) Male threaded components may be used in accordance with Table 314.2.1 and its Notes.

(b) Female threaded components shall be at least equivalent in strength and toughness to threaded components listed in Table 326.1 and otherwise suitable for the service.

(c) Threaded components of a specialty nature which are not subject to external moment loading, such as thermometer wells, may be used under severe cyclic conditions.

(d) A coupling having straight threads may be used only for Category D Fluid Service, and only with taper-threaded mating components.

314.2.2 Straight-Threaded Joints. Threaded joints in which the tightness of the joint is provided by a seating surface other than the threads (e.g., a union comprising male and female ends joined with a threaded union nut, or other constructions shown typically in Fig. 335.3.3) may be used. If such joints are used under severe cyclic conditions and are subject to external moment loadings, safeguarding is required.

Copyright ASME International
Provided by IHS under license with ASME
No reproduction or networking permitted without license from IHS
Not for Resale

315 TUBING JOINTS

315.1 General

In selecting and applying flared, flareless, and compression type tubing fittings, the designer shall consider the possible adverse effects on the joints of such factors as assembly and disassembly, cyclic loading, vibration, shock, and thermal expansion and contraction.

315.2 Joints Conforming to Listed Standards

Joints using flared, flareless, or compression type tubing fittings covered by listed standards may be used in Normal Fluid Service provided that

(a) the fittings and joints are suitable for the tubing with which they are to be used (considering maximum and minimum wall thickness) and are used within the pressure-temperature limitations of the fitting and the joint

(b) the joints are safeguarded when used under severe cyclic conditions

315.3 Joints Not Conforming to Listed Standards

Joints using flared, flareless, or compression type tubing fittings not listed in Table 326.1 may be used in accordance with para. 315.2 provided that the type of fitting selected is also adequate for pressure and other loadings. The design shall be qualified as required by para. 304.7.2.

316 CAULKED JOINTS

Caulked joints such as bell type joints shall be limited to Category D fluid service and to a temperature not over 93°C (200°F). They shall be used within the pressure-temperature limitations of the joint and pipe. Provisions shall be made to prevent disengagement of joints, to prevent buckling of the piping, and to sustain lateral reactions produced by branch connections or other causes.

317 SOLDERED AND BRAZED JOINTS

317.1 Soldered Joints

Soldered joints shall be made in accordance with the provisions of para. 333 and may be used only in Category D fluid service. Fillet joints made with solder metal are not permitted. The low melting point of solder shall be considered where possible exposure to fire or elevated temperature is involved.

317.2 Brazed and Braze Welded Joints

(a) Brazed and braze welded joints made in accordance with the provisions in para. 333 are suitable for Normal Fluid Service. They shall be safeguarded in fluid services which are flammable, toxic, or damaging to human tissue. They shall not be used under severe cyclic conditions. The melting point of brazing alloys shall be considered where possible exposure to fire is involved.

(b) Fillet joints made with brazing filler metal are not permitted.

318 SPECIAL JOINTS

Special joints are those not covered elsewhere in Chapter II, Part 4, such as bell type and packed gland type joints.

318.1 General

318.1.1 Listed Joints. Joints using listed components are suitable for Normal Fluid Service.

318.1.2 Unlisted Joints. For joints which utilize unlisted components, pressure design shall be qualified as required by para. 304.7.2.

318.2 Specific Requirements

318.2.1 Joint Integrity. Separation of the joint shall be prevented by a means which has sufficient strength to withstand anticipated conditions of service.

318.2.2 Joint Interlocks. Either mechanical or welded interlocks shall be provided to prevent separation of any joint used for a fluid service which is flammable, toxic, or damaging to human tissues, of any joint to be used under severe cyclic conditions, and of any joint exposed to temperatures in the creep range.

318.2.3 Bell and Gland Type Joints. If not covered in para. 316, bell type and gland type joints used under severe cyclic conditions require safeguarding.

PART 5
FLEXIBILITY AND SUPPORT

319 PIPING FLEXIBILITY

319.1 Requirements

319.1.1 Basic Requirements. Piping systems shall have sufficient flexibility to prevent thermal expansion or contraction or movements of piping supports and terminals from causing:

(a) failure of piping or supports from overstress or fatigue

(b) leakage at joints

(c) detrimental stresses or distortion in piping and valves or in connected equipment (pumps and turbines, for example), resulting from excessive thrusts and moments in the piping

319.1.2 Specific Requirements. In para. 319, concepts, data, and methods are given for determining the requirements for flexibility in a piping system and for (04)

Copyright ASME International
Provided by IHS under license with ASME
No reproduction or networking permitted without license from IHS
Not for Resale

assuring that the system meets all of these requirements. In brief, these requirements are:

(a) that the computed stress range at any point due to displacements in the system shall not exceed the allowable stress range established in para. 302.3.5

(b) that reaction forces computed in para. 319.5 shall not be detrimental to supports or connected equipment

(c) that computed movement of the piping shall be within any prescribed limits, and properly accounted for in the flexibility calculations

If it is determined that a piping system does not have adequate inherent flexibility, means for increasing flexibility shall be provided in accordance with para. 319.7.

Alternative rules for evaluating the stress range are provided in Appendix P.

319.2 Concepts

Concepts characteristic of piping flexibility analysis are covered in the following paragraphs. Special consideration is given to displacements (strains) in the piping system, and to resultant bending and torsional stresses.

319.2.1 Displacement Strains

(a) Thermal Displacements. A piping system will undergo dimensional changes with any change in temperature. If it is constrained from free expansion or contraction by connected equipment and restraints such as guides and anchors, it will be displaced from its unrestrained position.

(b) Restraint Flexibility. If restraints are not considered rigid, their flexibility may be considered in determining displacement stress range and reactions.

(c) Externally Imposed Displacements. Externally caused movement of restraints will impose displacements on the piping in addition to those related to thermal effects. Movements may result from tidal changes (dock piping), wind sway (e.g., piping supported from a tall slender tower), or temperature changes in connected equipment.

Movement due to earth settlement, since it is a single cycle effect, will not significantly influence fatigue life. A displacement stress range greater than that permitted by para. 302.3.5(d) may be allowable if due consideration is given to avoidance of excessive localized strain and end reactions.

(d) Total Displacement Strains. Thermal displacements, reaction displacements, and externally imposed displacements all have equivalent effects on the piping system, and shall be considered together in determining the total displacement strains (proportional deformation) in various parts of the piping system.

319.2.2 Displacement Stresses

(a) Elastic Behavior. Stresses may be considered proportional to the total displacement strains in a piping system in which the strains are well-distributed and not excessive at any point (a balanced system). Layout of systems should aim for such a condition, which is assumed in flexibility analysis methods provided in this Code.

(b) Overstrained Behavior. Stresses cannot be considered proportional to displacement strains throughout a piping system in which an excessive amount of strain may occur in localized portions of the system (an unbalanced system). Operation of an unbalanced system in the creep range may aggravate the deleterious effects due to creep strain accumulation in the most susceptible regions of the system. Unbalance may result from one or more of the following:

(1) highly stressed small size pipe runs in series with large or relatively stiff pipe runs.

(2) a local reduction in size or wall thickness, or local use of material having reduced yield strength (for example, girth welds of substantially lower strength than the base metal).

(3) a line configuration in a system of uniform size in which the expansion or contraction must be absorbed largely in a short offset from the major portion of the run.

(4) variation of piping material or temperature in a line. When differences in the elastic modulus within a piping system will significantly affect the stress distribution, the resulting displacement stresses shall be computed based on the actual elastic moduli at the respective operating temperatures for each segment in the system and then multiplied by the ratio of the elastic modulus at ambient temperature to the modulus used in the analysis for each segment.

Unbalance should be avoided or minimized by design and layout of piping systems, particularly those using materials of low ductility. Many of the effects of unbalance can be mitigated by selective use of cold spring. If unbalance cannot be avoided, the designer shall use appropriate analytical methods in accordance with para. 319.4 to assure adequate flexibility as defined in para. 319.1.

319.2.3 Displacement Stress Range

(a) In contrast with stresses from sustained loads, such as internal pressure or weight, displacement stresses may be permitted to attain sufficient magnitude to cause local yielding in various portions of a piping system. When the system is initially operated at the condition of greatest displacement (highest or lowest temperature, or greatest imposed movement) from its installed condition, any yielding or creep brings about a reduction or relaxation of stress. When the system is later returned to its original condition (or a condition of opposite displacement), a reversal and redistribution of stresses occurs which is referred to as self-springing. It is similar to cold springing in its effects.

(b) While stresses resulting from displacement strains diminish with time due to yielding or creep, the algebraic difference between strains in the extreme displacement condition and the original (as-installed) condition

--`,,```,,,,````-`-`,,`,,`,`,,`---

Copyright ASME International
Provided by IHS under license with ASME
No reproduction or networking permitted without license from IHS Not for Resale

(or any anticipated condition with a greater differential effect) remains substantially constant during any one cycle of operation. This difference in strains produces a corresponding stress differential, the displacement stress range, which is used as the criterion in the design of piping for flexibility. See para. 302.3.5(d) for the allowable stress range S_A and para. 319.4.4(a) for the computed stress range S_E.

(c) Average axial stresses (over the pipe cross section) due to longitudinal forces caused by displacement strains are not normally considered in the determination of displacement stress range, since this stress is not significant in typical piping layouts. In special cases, however, consideration of average axial displacement stress is necessary. Examples include buried lines containing hot fluids, double wall pipes, and parallel lines with different operating temperatures, connected together at more than one point.

319.2.4 Cold Spring. Cold spring is the intentional deformation of piping during assembly to produce a desired initial displacement and stress. Cold spring is beneficial in that it serves to balance the magnitude of stress under initial and extreme displacement conditions. When cold spring is properly applied there is less likelihood of overstrain during initial operation; hence, it is recommended especially for piping materials of limited ductility. There is also less deviation from as-installed dimensions during initial operation, so that hangers will not be displaced as far from their original settings.

Inasmuch as the service life of a piping system is affected more by the range of stress variation than by the magnitude of stress at a given time, no credit for cold spring is permitted in stress range calculations. However, in calculating the thrusts and moments where actual reactions as well as their range of variations are significant, credit is given for cold spring.

319.3 Properties for Flexibility Analysis

The following paragraphs deal with properties of piping materials and their application in piping flexibility stress analysis.

319.3.1 Thermal Expansion Data

(a) Values for Stress Range. Values of thermal displacements to be used in determining total displacement strains for computing the stress range shall be determined from Appendix C as the algebraic difference between the value at maximum metal temperature and that at the minimum metal temperature for the thermal cycle under analysis.

(b) Values for Reactions. Values of thermal displacements to be used in determining total displacement strains for computation of reactions on supports and connected equipment shall be determined as the algebraic difference between the value at maximum (or minimum) temperature for the thermal cycle under analysis and the value at the temperature expected during installation.

319.3.2 Modulus of Elasticity. The reference modulus of elasticity at 21°C (70°F), E_a, and the modulus of elasticity at maximum or minimum temperature, E_m, shall be taken as the values shown in Appendix C for the temperatures determined in para. 319.3.1(a) or (b). For materials not included in Appendix C, reference shall be made to authoritative source data, such as publications of the National Institute of Standards and Technology.

319.3.3 Poisson's Ratio. Poisson's ratio may be taken as 0.3 at all temperatures for all metals. More accurate and authoritative data may be used if available.

319.3.4 Allowable Stresses

(a) The allowable displacement stress range S_A and permissible additive stresses shall be as specified in para. 302.3.5(d) for systems primarily stressed in bending and/or torsion.

(b) The stress intensification factors in Appendix D have been developed from fatigue tests of representative piping components and assemblies manufactured from ductile ferrous materials. The allowable displacement stress range is based on tests of carbon and austenitic stainless steels. Caution should be exercised when using Eqs. (1a) and (1b) (para. 302.3.5) for allowable displacement stress range for some nonferrous materials (e.g., certain copper and aluminum alloys) for other than low cycle applications.

319.3.5 Dimensions. Nominal thicknesses and outside diameters of pipe and fittings shall be used in flexibility calculations.

319.3.6 Flexibility and Stress Intensification Factors. In the absence of more directly applicable data, the flexibility factor k and stress intensification factor i shown in Appendix D shall be used in flexibility calculations in para. 319.4. For piping components or attachments (such as valves, strainers, anchor rings, or bands) not covered in the Table, suitable stress intensification factors may be assumed by comparison of their significant geometry with that of the components shown.

319.4 Flexibility Analysis

319.4.1 Formal Analysis Not Required. No formal analysis of adequate flexibility is required for a piping system which

(a) duplicates, or replaces without significant change, a system operating with a successful service record

(b) can readily be judged adequate by comparison with previously analyzed systems

Copyright ASME International
Provided by IHS under license with ASME
No reproduction or networking permitted without license from IHS
Not for Resale

(c) is of uniform size, has no more than two points of fixation, no intermediate restraints, and falls within the limitations of empirical Eq. (16)[9]

$$\frac{Dy}{(L-U)^2} \le K_1 \tag{16}$$

where

D = outside diameter of pipe, mm (in.)
E_a = reference modulus of elasticity at 21°C (70°F), MPa (ksi)
K_1 = 208 000 S_A/E_a, $(\text{mm/m})^2$
= 30 S_A/E_a, $(\text{in./ft})^2$
L = developed length of piping between anchors, m (ft)
S_A = allowable displacement stress range per Eq. (1a), MPa (ksi)
U = anchor distance, straight line between anchors, m (ft)
y = resultant of total displacement strains, mm (in.), to be absorbed by the piping system

319.4.2 Formal Analysis Requirements

(a) Any piping system which does not meet the criteria in para. 319.4.1 shall be analyzed by a simplified, approximate, or comprehensive method of analysis, as appropriate.

(b) A simplified or approximate method may be applied only if used within the range of configurations for which its adequacy has been demonstrated.

(c) Acceptable comprehensive methods of analysis include analytical and chart methods which provide an evaluation of the forces, moments, and stresses caused by displacement strains (see para. 319.2.1).

(d) Comprehensive analysis shall take into account stress intensification factors for any component other than straight pipe. Credit may be taken for the extra flexibility of such a component.

319.4.3 Basic Assumptions and Requirements. Standard assumptions specified in para. 319.3 shall be followed in all cases. In calculating the flexibility of a piping system between anchor points, the system shall be treated as a whole. The significance of all parts of the line and of all restraints introduced for the purpose of reducing moments and forces on equipment or small branch lines, and also the restraint introduced by support friction, shall be recognized. Consider all displacements, as outlined in para. 319.2.1, over the temperature range defined by para. 319.3.1.

[9] *WARNING*: No general proof can be offered that this equation will yield accurate or consistently conservative results. It is not applicable to systems used under severe cyclic conditions. It should be used with caution in configurations such as unequal leg U-bends ($L/U > 2.5$) or near-straight "sawtooth" runs, or for large thin-wall pipe ($i \ge 5$), or where extraneous displacements (not in the direction connecting anchor points) constitute a large part of the total displacement. There is no assurance that terminal reactions will be acceptably low, even if a piping system falls within the limitations of Eq. (16).

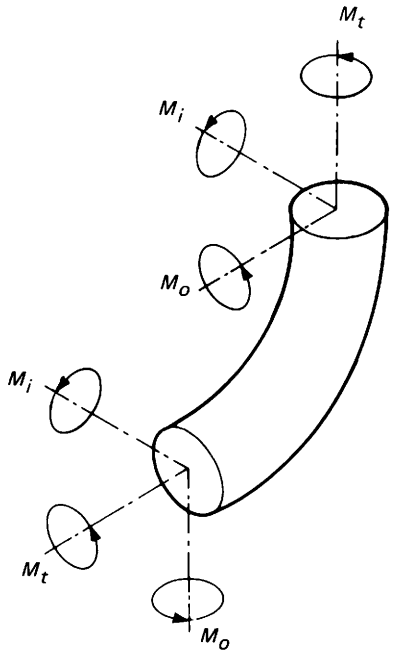

Fig. 319.4.4A Moments in Bends

319.4.4 Flexibility Stresses

(a) The range of bending and torsional stresses shall be computed using the reference modulus of elasticity at 21°C (70°F), E_a, except as provided in para. 319.2.2(b)(4), and then combined in accordance with Eq. (17) to determine the computed displacement stress range S_E, which shall not exceed the allowable stress range S_A in para. 302.3.5(d).

$$S_E = \sqrt{S_b^2 + 4S_t^2} \tag{17}$$

where

M_t = torsional moment
S_b = resultant bending stress
S_t = torsional stress
= $M_t/2Z$
Z = section modulus of pipe

(b) The resultant bending stresses S_b to be used in Eq. (17) for elbows, miter bends, and full size outlet branch connections (Legs 1, 2, and 3) shall be calculated in accordance with Eq. (18), with moments as shown in Figs. 319.4.4A and 319.4.4B.

$$S_b = \frac{\sqrt{(i_i M_i)^2 + (i_o M_o)^2}}{Z} \tag{18}$$

where

Copyright ASME International
Provided by IHS under license with ASME
No reproduction or networking permitted without license from IHS
Not for Resale

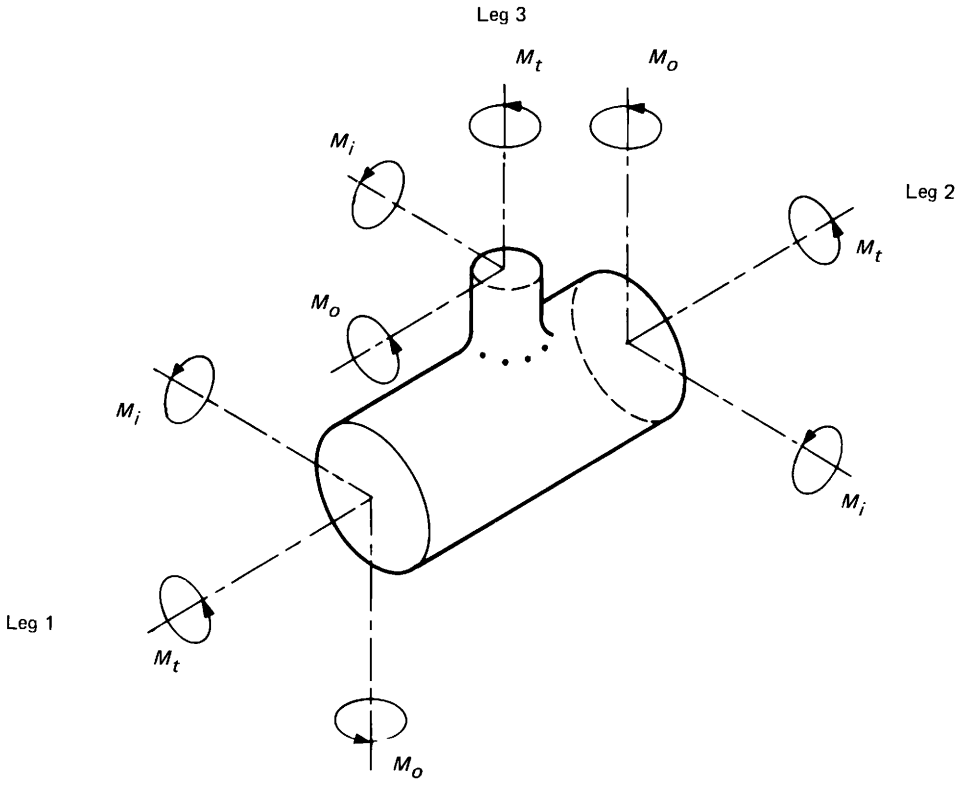

Fig. 319.4.4B Moments in Branch Connections

i_i = in-plane stress intensification factor from Appendix D
i_o = out-plane stress intensification factor from Appendix D
M_i = in-plane bending moment
M_o = out-plane bending moment
S_b = resultant bending stress
Z = section modulus of pipe

(c) The resultant bending stress S_b to be used in Eq. (17) for reducing outlet branch connections shall be calculated in accordance with Eqs. (19) and (20), with moments as shown in Fig. 319.4.4B.
For header (Legs 1 and 2):

$$S_b = \frac{\sqrt{(i_i M_i)^2 + (i_o M_o)^2}}{Z} \quad (19)$$

For branch (Leg 3):

$$S_b = \frac{\sqrt{(i_i M_i)^2 + (i_o M_o)^2}}{Z_e} \quad (20)$$

where
i_i = in-plane stress intensification factor (Appendix D)
i_o = out-plane stress intensification factor (Appendix D)
r_2 = mean branch cross-sectional radius
S_b = resultant bending stress
$\overline{T}_b$ = thickness of pipe matching branch
$\overline{T}_h$ = thickness of pipe matching run of tee or header exclusive of reinforcing elements
T_S = effective branch wall thickness, lesser of $\overline{T}_h$ and $(i_i)(\overline{T}_b)$
Z_e = effective section modulus for branch
$= \pi r_2^2 T_S$ (21)

319.4.5 Required Weld Quality Assurance. Any weld at which S_E exceeds $0.8S_A$ (as defined in para. 302.3.5) and the equivalent number of cycles N exceeds 7000 shall be fully examined in accordance with para. 341.4.3.

319.5 Reactions

Reaction forces and moments to be used in design of restraints and supports for a piping system, and in evaluating the effects of piping displacements on connected equipment, shall be based on the reaction range R for the extreme displacement conditions, considering the temperature range defined in para. 319.3.1(b), and using E_a. The designer shall consider instantaneous maximum values of forces and moments in the original and

Copyright ASME International
Provided by IHS under license with ASME
No reproduction or networking permitted without license from IHS
Not for Resale

extreme displacement conditions (see para. 319.2.3), as well as the reaction range, in making these evaluations.

319.5.1 Maximum Reactions for Simple Systems. For a two-anchor piping system without intermediate restraints, the maximum instantaneous values of reaction forces and moments may be estimated from Eqs. (22) and (23).

(a) For Extreme Displacement Conditions, R_m. The temperature for this computation is the maximum or minimum metal temperature defined in para. 319.3.1(b), whichever produces the larger reaction:

$$R_m = R\left(1 - \frac{2C}{3}\right)\frac{E_m}{E_a} \tag{22}$$

where

C = cold-spring factor varying from zero for no cold spring to 1.0 for 100% cold spring. (The factor two-thirds is based on experience which shows that specified cold spring cannot be fully assured, even with elaborate precautions.)

E_a = reference modulus of elasticity at 21°C (70°F)

E_m = modulus of elasticity at maximum or minimum metal temperature

R = range of reaction forces or moments (derived from flexibility analysis) corresponding to the full displacement stress range and based on E_a

R_m = estimated instantaneous maximum reaction force or moment at maximum or minimum metal temperature

(b) For Original Condition, R_a. The temperature for this computation is the expected temperature at which the piping is to be assembled.

$R_a = CR$ or C_1R, whichever is greater

where nomenclature is as in para. 319.5.1(a) and

$$C_1 = 1 - \frac{S_h E_a}{S_E E_m} \tag{23}$$

= estimated self-spring or relaxation factor; use zero if value of C_1 is negative

R_a = estimated instantaneous reaction force or moment at installation temperature

S_E = computed displacement stress range (see para. 319.4.4)

S_h = see definition in para. 302.3.5(d)

319.5.2 Maximum Reactions for Complex Systems. For multianchor piping systems and for two-anchor systems with intermediate restraints, Eqs. (22) and (23) are not applicable. Each case must be studied to estimate location, nature, and extent of local overstrain, and its effect on stress distribution and reactions.

319.6 Calculation of Movements

Calculations of displacements and rotations at specific locations may be required where clearance problems are involved. In cases where small-size branch pipes attached to stiffer run pipes are to be calculated separately, the linear and angular movements of the junction point must be calculated or estimated for proper analysis of the branch.

319.7 Means of Increasing Flexibility

The layout of piping often provides inherent flexibility through changes in direction, so that displacements produce chiefly bending and torsional strains within prescribed limits. The amount of axial tension or compression strain (which produces large reactions) usually is small.

Where the piping lacks built-in changes of direction, or where it is unbalanced [see para. 319.2.2(b)], large reactions or detrimental overstrain may be encountered. The designer should consider adding flexibility by one or more of the following means: bends, loops, or offsets; swivel joints; corrugated pipe; expansion joints of the bellows or slip-joint type; or other devices permitting angular, rotational, or axial movement. Suitable anchors, ties, or other devices shall be provided as necessary to resist end forces produced by fluid pressure, frictional resistance to movement, and other causes. When expansion joints or other similar devices are provided, the stiffness of the joint or device should be considered in any flexibility analysis of the piping.

321 PIPING SUPPORT

321.1 General

The design of support structures (not covered by this Code) and of supporting elements (see definitions of piping and pipe supporting elements in para. 300.2) shall be based on all concurrently acting loads transmitted into such supports. These loads, defined in para. 301, include weight effects, loads introduced by service pressures and temperatures, vibration, wind, earthquake, shock, and displacement strain (see para. 319.2.2).

For piping containing gas or vapor, weight calculations need not include the weight of liquid if the designer has taken specific precautions against entrance of liquid into the piping, and if the piping is not to be subjected to hydrostatic testing at initial construction or subsequent inspections.

321.1.1 Objectives. The layout and design of piping and its supporting elements shall be directed toward preventing the following:

(a) piping stresses in excess of those permitted in this Code

(b) leakage at joints

(c) excessive thrusts and moments on connected equipment (such as pumps and turbines)

Copyright ASME International
Provided by IHS under license with ASME
No reproduction or networking permitted without license from IHS
Not for Resale

(d) excessive stresses in the supporting (or restraining) elements

(e) resonance with imposed or fluid-induced vibrations

(f) excessive interference with thermal expansion and contraction in piping which is otherwise adequately flexible

(g) unintentional disengagement of piping from its supports

(h) excessive piping sag in piping requiring drainage slope

(i) excessive distortion or sag of piping (e.g., thermoplastics) subject to creep under conditions of repeated thermal cycling

(j) excessive heat flow, exposing supporting elements to temperature extremes outside their design limits

321.1.2 Analysis. In general, the location and design of pipe supporting elements may be based on simple calculations and engineering judgment. However, when a more refined analysis is required and a piping analysis, which may include support stiffness, is made, the stresses, moments, and reactions determined thereby shall be used in the design of supporting elements.

321.1.3 Stresses for Pipe Supporting Elements. Allowable stresses for materials used for pipe supporting elements, except springs, shall be in accordance with para. 302.3.1. Longitudinal weld joint factors E_j, however, need not be applied to the allowable stresses for welded piping components which are to be used for pipe supporting elements.

321.1.4 Materials

(a) Permanent supports and restraints shall be of material suitable for the service conditions. If steel is cold-formed to a centerline radius less than twice its thickness, it shall be annealed or normalized after forming.

(b) Cast, ductile, and malleable iron may be used for rollers, roller bases, anchor bases, and other supporting elements subject chiefly to compressive loading. Cast iron is not recommended if the piping may be subject to impact-type loading resulting from pulsation or vibration. Ductile and malleable iron may be used for pipe and beam clamps, hanger flanges, clips, brackets, and swivel rings.

(c) Steel of an unknown specification may be used for pipe supporting elements that are not welded directly to pressure containing piping components. (Compatible intermediate materials of known specification may be welded directly to such components.) Basic allowable stress in tension or compression shall not exceed 82 MPa (12 ksi) and the support temperature shall be within the range of −29°C to 343°C (−20°F to 650°F). For stress values in shear and bearing, see para. 302.3.1(b).

(d) Wood or other materials may be used for pipe supporting elements, provided the supporting element is properly designed, considering temperature, strength, and durability.

(e) Attachments welded or bonded to the piping shall be of a material compatible with the piping and service. For other requirements, see para. 321.3.2.

321.1.5 Threads. Screw threads shall conform to ASME B1.1 unless other threads are required for adjustment under heavy loads. Turnbuckles and adjusting nuts shall have the full length of internal threads engaged. Any threaded adjustment shall be provided with a locknut, unless locked by other means.

321.2 Fixtures

321.2.1 Anchors and Guides

(a) A supporting element used as an anchor shall be designed to maintain an essentially fixed position.

(b) To protect terminal equipment or other (weaker) portions of the system, restraints (such as anchors and guides) shall be provided where necessary to control movement or to direct expansion into those portions of the system which are designed to absorb them. The design, arrangement, and location of restraints shall ensure that expansion joint movements occur in the directions for which the joint is designed. In addition to the other thermal forces and moments, the effects of friction in other supports of the system shall be considered in the design of such anchors and guides.

(c) Piping layout, anchors, restraints, guides, and supports for all types of expansion joints shall be designed in accordance with para. X301.2 of Appendix X.

321.2.2 Inextensible Supports Other Than Anchors and Guides [10]

(a) Supporting elements shall be designed to permit the free movement of piping caused by thermal expansion and contraction.

(b) Hangers include pipe and beam clamps, clips, brackets, rods, straps, chains, and other devices. They shall be proportioned for all required loads. Safe loads for threaded parts shall be based on the root area of the threads.

(c) Sliding Supports. Sliding supports (or shoes) and brackets shall be designed to resist the forces due to friction in addition to the loads imposed by bearing. The dimensions of the support shall provide for the expected movement of the supported piping.

321.2.3 Resilient Supports [10]

(a) Spring supports shall be designed to exert a supporting force, at the point of attachment to the pipe, equal to the load as determined by weight balance calculations. They shall be provided with means to prevent misalignment, buckling, or eccentric loading of the

[10] Various types of inextensible (solid) and resilient supports are illustrated in MSS SP-58.

Copyright ASME International
Provided by IHS under license with ASME
No reproduction or networking permitted without license from IHS
Not for Resale

springs, and to prevent unintentional disengagement of the load.

(b) Constant-support spring hangers provide a substantially uniform supporting force throughout the range of travel. The use of this type of spring hanger is advantageous at locations subject to appreciable movement with thermal changes. Hangers of this type should be selected so that their travel range exceeds expected movements.

(c) Means shall be provided to prevent overstressing spring hangers due to excessive deflections. It is recommended that all spring hangers be provided with position indicators.

321.2.4 Counterweight Supports. Counterweights shall be provided with stops to limit travel. Weights shall be positively secured. Chains, cables, hangers, rocker arms, or other devices used to attach the counterweight load to the piping shall be subject to the requirements of para. 321.2.2.

321.2.5 Hydraulic Supports. An arrangement utilizing a hydraulic cylinder may be used to give a constant supporting force. Safety devices and stops shall be provided to support the load in case of hydraulic failure.

321.3 Structural Attachments

External and internal attachments to piping shall be designed so that they will not cause undue flattening of the pipe, excessive localized bending stresses, or harmful thermal gradients in the pipe wall. It is important that attachments be designed to minimize stress concentration, particularly in cyclic services.

321.3.1 Nonintegral Attachments. Nonintegral attachments, in which the reaction between the piping and the attachment is by contact, include clamps, slings, cradles, U-bolts, saddles, straps, and clevises. If the weight of a vertical pipe is supported by a clamp, it is recommended to prevent slippage that the clamp be located below a flange, fitting, or support lugs welded to the pipe.

321.3.2 Integral Attachments. Integral attachments include plugs, ears, shoes, plates, and angle clips, cast on or welded to the piping. The material for integral attachments attached by welding shall be of good weldable quality. [See para. 321.1.4(e) for material requirements.] Preheating, welding, and heat treatment shall be in accordance with Chapter V. Consideration shall be given to the localized stresses induced in the piping component by welding the integral attachment.

(a) Integral reinforcement, complete encirclement reinforcement, or intermediate pads of suitable alloy and design may be used to reduce contamination or undesirable heat effects in alloy piping.

(b) Intermediate pads, integral reinforcement, complete encirclement reinforcement, or other means of reinforcement may be used to distribute stresses.

321.4 Structural Connections

The load from piping and pipe supporting elements (including restraints and braces) shall be suitably transmitted to a pressure vessel, building, platform, support structure, foundation, or to other piping capable of bearing the load without deleterious effects. See Appendix F, para. F321.4.

PART 6
SYSTEMS

322 SPECIFIC PIPING SYSTEMS

322.3 Instrument Piping

322.3.1 Definition. Instrument piping within the scope of this Code includes all piping and piping components used to connect instruments to other piping or equipment, and control piping used to connect air or hydraulically operated control apparatus. It does not include instruments, or permanently sealed fluid-filled tubing systems furnished with instruments as temperature or pressure responsive devices.

322.3.2 Requirements. Instrument piping shall meet the applicable requirements of the Code and the following.

(a) The design pressure and temperature for instrument piping shall be determined in accordance with para. 301. If more severe conditions are experienced during blowdown of the piping, they may be treated as occasional variations in accordance with para. 302.2.4.

(b) Consideration shall be given to the mechanical strength (including fatigue) of small instrument connections to piping or apparatus (see para. 304.3.5).

(c) Instrument piping containing fluids which are normally static and subject to freezing shall be protected by heat tracing or other heating methods, and insulation.

(d) If it will be necessary to blow down (or bleed) instrument piping containing toxic or flammable fluids, consideration shall be given to safe disposal.

322.6 Pressure Relieving Systems

Pressure relieving systems within the scope of this Code shall conform to the following requirements. See also Appendix F, para. F322.6.

322.6.1 Stop Valves in Pressure Relief Piping. If one or more stop valves are installed between the piping being protected and its protective device or devices, or between the protective device or devices and the point of discharge, they shall meet the requirements of (a) and either (b) or (c), below.

(a) A full-area stop valve may be installed on the inlet side of a pressure relieving device. A full area stop valve may be placed on the discharge side of a pressure relieving device when its discharge is connected to a common

Copyright ASME International
Provided by IHS under license with ASME
No reproduction or networking permitted without license from IHS
Not for Resale

header with other discharge lines from other pressure relieving devices. Stop valves of less than full area may be used on both the inlet side and discharge side of pressure relieving devices as outlined herein if the stop valves are of such type and size that the increase in pressure drop will not reduce the relieving capacity below that required, nor adversely affect the proper operation of the pressure relieving device.

(b) Stop valves to be used in pressure relief piping shall be so constructed or positively controlled that the closing of the maximum number of block valves possible at one time will not reduce the pressure relieving capacity provided by the unaffected relieving devices below the required relieving capacity.

(c) As an alternative to (b) above, stop valves shall be so constructed and arranged that they can be locked or sealed in either the open or closed position. See Appendix F, para. F322.6.

322.6.2 Pressure Relief Discharge Piping. Discharge lines from pressure relieving safety devices shall be designed to facilitate drainage. When discharging directly to the atmosphere, discharge shall not impinge on other piping or equipment and shall be directed away from platforms and other areas used by personnel. Reactions on the piping system due to actuation of safety relief devices shall be considered, and adequate strength shall be provided to withstand these reactions.

322.6.3 Pressure Relieving Devices

(a) Pressure relieving devices required by para. 301.2.2(a) shall be in accordance with the BPV Code, Section VIII, Division 1, UG-125(c), UG-126 through UG-128, and UG-132 through UG-136, excluding UG-135(e) and UG-136(c). The terms *design pressure*[11] and *piping system* shall be substituted for *maximum allowable working pressure* and *vessel*, respectively, in these paragraphs. The required relieving capacity of any pressure relieving device shall include consideration of all piping systems which it protects.

(b) Relief set pressure[12] shall be in accordance with Section VIII, Division 1, with the exceptions stated in alternatives (1) and (2), below.

(1) With the owner's approval the set pressure may exceed the limits in Section VIII, Division 1, provided that the limit on maximum relieving pressure stated in (c) below will not be exceeded.

(2) For a liquid thermal expansion relief device which protects only a blocked-in portion of a piping system, the set pressure shall not exceed the lesser of the system test pressure or 120% of design pressure.

(c) The maximum relieving pressure[13] shall be in accordance with Section VIII, Division 1, with the exception that the allowances in para. 302.2.4(f) are permitted, provided that all other requirements of para. 302.2.4 are also met.

---

[11] The *design pressure* for pressure relief is the maximum design pressure permitted, considering all components in the piping system.

[12] *Set pressure* is the pressure at which the device begins to relieve, e.g., lift pressure of a spring-actuated relief valve, bursting pressure of a rupture disk, or breaking pressure of a breaking pin device.

[13] *Maximum relieving pressure* is the maximum system pressure during a pressure relieving event.

--`,,```,,,,````-`-`,,`,,`,`,,`---

Copyright ASME International
Provided by IHS under license with ASME
No reproduction or networking permitted without license from IHS
Not for Resale

Chapter III
Materials

323 GENERAL REQUIREMENTS

Chapter III states limitations and required qualifications for materials based on their inherent properties. Their use in piping is also subject to requirements and limitations in other parts of this Code [see para. 300(d)]. See also para. 321.1.4 for support materials, and Appendix F, para. F323, for precautionary considerations.

323.1 Materials and Specifications

323.1.1 Listed Materials. Any material used in pressure containing piping components shall conform to a listed specification except as provided in para. 323.1.2.

323.1.2 Unlisted Materials. Unlisted materials may be used provided they conform to a published specification covering chemistry, physical and mechanical properties, method and process of manufacture, heat treatment, and quality control, and otherwise meet the requirements of this Code. Allowable stresses shall be determined in accordance with the applicable allowable stress basis of this Code or a more conservative basis.

323.1.3 Unknown Materials. Materials of unknown specification shall not be used for pressure-containing piping components.

323.1.4 Reclaimed Materials. Reclaimed pipe and other piping components may be used, provided they are properly identified as conforming to a listed or published specification (para. 323.1.1 or 323.1.2) and otherwise meet the requirements of this Code. Sufficient cleaning and inspection shall be made to determine minimum wall thickness and freedom from imperfections which would be unacceptable in the intended service.

323.2 Temperature Limitations

The designer shall verify that materials which meet other requirements of the Code are suitable for service throughout the operating temperature range. Attention is directed to Note (7) in Appendix A, which explains the means used to set both cautionary and restrictive temperature limits in Tables A-1 and A-2.

323.2.1 Upper Temperature Limits, Listed Materials. A listed material may be used at a temperature above the maximum for which a stress value or rating is shown, only if

(a) there is no prohibition in Appendix A or elsewhere in the Code

(b) the designer verifies the serviceability of the material in accordance with para. 323.2.4

323.2.2 Lower Temperature Limits, Listed Materials

(a) A listed material may be used at any temperature not lower than the minimum shown in Table A-1, provided that the base metal, weld deposits, and heat-affected zone (HAZ) are qualified as required by the applicable entry in Column A of Table 323.2.2.

(b) For carbon steels with a letter designation in the Min. Temp. column of Table A-1, the minimum temperature is defined by the applicable curve and Notes in Fig. 323.2.2A. If a design minimum metal temperature-thickness combination is on or above the curve, impact testing is not required.

(c) A listed material may be used at a temperature lower than the minimum shown in Table A-1 or Fig. 323.2.2A (including Notes), unless prohibited in Table 323.2.2, Table A-1, or elsewhere in the Code, and provided that the base metal, weld deposits, and HAZ are qualified as required by the applicable entry in Column B of Table 323.2.2.

(d) Where the Stress Ratio defined in Fig. 323.2.2B is less than one, Fig. 323.2.2B provides a further basis for the use of carbon steels covered by paras. 323.2.2(a) and (b), without impact testing.

(1) For design minimum temperatures of −48°C (−55°F) and above, the minimum design metal temperature without impact testing determined in para. 323.2.2(b), for the given material and thickness, may be reduced by the amount of the temperature reduction provided in Fig. 323.2.2B for the applicable Stress Ratio. If the resulting temperature is lower than the minimum design metal temperature, impact testing of the material is not required. Where this is applied, the piping system shall also comply with the following requirements:

(a) The piping shall be subjected to a hydrostatic test at no less than $1\frac{1}{2}$ times the design pressure.

(b) Except for piping with a nominal wall thickness of 13 mm ($\frac{1}{2}$ in.) or less, the piping system shall be safeguarded (see Appendix G) from external loads such as maintenance loads, impact loads, and thermal shock.

(2) For design minimum temperatures lower than −48°C (−55°F), impact testing is required for all materials, except as provided by Note (3) of Table 323.2.2.

(e) The allowable stress or component rating at any temperature below the minimum shown in Table A-1

Copyright ASME International
Provided by IHS under license with ASME
No reproduction or networking permitted without license from IHS
Not for Resale

Table 323.2.2 Requirements for Low Temperature Toughness Tests for Metals

These Toughness Test Requirements Are in Addition to Tests Required by the Material Specification

	Type of Material	Column A Design Minimum Temperature at or Above Min. Temp. in Table A-1 or Fig. 323.2.2A		Column B Design Minimum Temperature Below Min. Temp. in Table A-1 or Fig. 323.2.2A
Listed Materials	1 Gray cast iron	**A-1** No additional requirements		**B-1** No additional requirements
	2 Malleable and ductile cast iron; carbon steel per Note (1)	**A-2** No additional requirements		**B-2** Materials designated in Box 2 shall not be used.
		(a) Base Metal	**(b) Weld Metal and Heat Affected Zone (HAZ) [Note (2)]**	
	3 Other carbon steels, low and intermediate alloy steels, high alloy ferritic steels, duplex stainless steels	**A-3** (a) No additional requirements	**A-3** (b) Weld metal deposits shall be impact tested per para. 323.3 if design min. temp. < −29°C (−20°F), except as provided in Notes (3) and (5), and except as follows: for materials listed for Curves C and D of Fig. 323.2.2A, where corresponding welding consumables are qualified by impact testing at the design minimum temperature or lower in accordance with the applicable AWS specification, additional testing is not required.	**B-3** Except as provided in Notes (3) and (5), heat treat base metal per applicable ASTM specification listed in para. 323.3.2; then impact test base metal, weld deposits, and HAZ per para. 323.3 [see Note (2)]. When materials are used at design min. temp. below the assigned curve as permitted by Notes (2) and (3) of Fig. 323.2.2A, weld deposits and HAZ shall be impact tested [see Note (2)].
	4 Austenitic stainless steels	**A-4** (a) If: (1) carbon content by analysis > 0.1%; or (2) material is not in solution heat treated condition; then, impact test per para. 323.3 for design min. temp. < −29°C (−20°F) except as provided in Notes (3) and (6)	**A-4** (b) Weld metal deposits shall be impact tested per para. 323.3 if design min. temp. < −29°C (−20°F) except as provided in para. 323.2.2 and in Notes (3) and (6)	**B-4** Base metal and weld metal deposits shall be impact tested per para. 323.3. See Notes (2), (3), and (6).
	5 Austenitic ductile iron, ASTM A 571	**A-5** (a) No additional requirements	**A-5** (b) Welding is not permitted	**B-5** Base metal shall be impact tested per para. 323.3. Do not use < −196°C (−320°F). Welding is not permitted.
	6 Aluminum, copper, nickel, and their alloys; unalloyed titanium	**A-6** (a) No additional requirements	**A-6** (b) No additional requirements unless filler metal composition is outside the range for base metal composition; then test per column B-6	**B-6** Designer shall be assured by suitable tests [see Note (4)] that base metal, weld deposits, and HAZ are suitable at the design min. temp.
Unlisted Materials	7 An unlisted material shall conform to a published specification. Where composition, heat treatment, and product form are comparable to those of a listed material, requirements for the corresponding listed material shall be met. Other unlisted materials shall be qualified as required in the applicable section of column B.			

Notes to this Table follow on next page

--`,,```,,,,````-`-`,,`,,`,`,,`---

Copyright ASME International
Provided by IHS under license with ASME
No reproduction or networking permitted without license from IHS

Not for Resale

(04) **Table 323.2.2 Requirements for Low Temperature Toughness Tests for Metals (Cont'd)**

NOTES:

(1) Carbon steels conforming to the following are subject to the limitations in Box B-2; plates per ASTM A 36, A 283, and A 570; pipe per ASTM A 134 when made from these plates; and pipe per ASTM A 53 Type F and API 5L Gr. A25 butt weld.

(2) Impact tests that meet the requirements of Table 323.3.1, which are performed as part of the weld procedure qualification, will satisfy all requirements of para. 323.2.2, and need not be repeated for production welds.

(3) Impact testing is not required if the design minimum temperature is below −29°C (−20°F) but at or above −104°C (−155°F) and the Stress Ratio defined in Fig. 323.2.2B does not exceed 0.3.

(4) Tests may include tensile elongation, sharp-notch tensile strength (to be compared with unnotched tensile strength), and/or other tests, conducted at or below design minimum temperature. See also para. 323.3.4.

(5) Impact tests are not required when the maximum obtainable Charpy specimen has a width along the notch of less than 2.5 mm (0.098 in.). Under these conditions, the design minimum temperature shall not be less than the lower of −48°C (−55°F) or the minimum temperature for the material in Table A-1.

(6) Impact tests are not required when the maximum obtainable Charpy specimen has a width along the notch of less than 2.5 mm (0.098 in.).

or Fig. 323.2.2A shall not exceed the stress value or rating at the minimum temperature in Table A-1 or the component standard.

(f) Impact testing is not required for the following combinations of weld metals and design minimum temperatures:

(1) for austenitic stainless steel base materials having a carbon content not exceeding 0.10%, welded without filler metal, at design minimum temperatures of −101°C (−150°F) and higher

(2) for austenitic weld metal

(a) having a carbon content not exceeding 0.10%, and produced with filler metals conforming to AWS A5.4, A5.9, A5.11, A5.14, or A5.22[1] at design minimum temperatures of −101°C (−150°F) and higher, or

(b) having a carbon content exceeding 0.10%, and produced with filler metals conforming to AWS A5.4, A5.9, A5.11, A5.14, or A5.22[1] at design minimum temperatures of −48°C (−55°F) and higher

323.2.3 Temperature Limits, Unlisted Materials. An unlisted material, acceptable under para. 323.1.2, shall be qualified for service at all temperatures within a stated range, from design minimum temperature to design maximum temperature, in accordance with para. 323.2.4.

323.2.4 Verification of Serviceability

(a) When an unlisted material is to be used, or when a listed material is to be used above the highest temperature for which stress values appear in Appendix A, the designer is responsible for demonstrating the validity of the allowable stresses and other limits used in design and of the approach taken in using the material, including the derivation of stress data and the establishment of temperature limits.

(b) Data for the development of design limits shall be obtained from a sound scientific program carried out in accordance with recognized technology for both the material and the intended service conditions. Factors to be considered include

(1) applicability and reliability of the data, especially for extremes of the temperature range

(2) resistance of the material to deleterious effects of the fluid service and of the environment throughout the temperature range

(3) determination of allowable stresses in accordance with para. 302.3

323.3 Impact Testing Methods and Acceptance Criteria

323.3.1 General. When impact testing is required by Table 323.2.2, provisions elsewhere in this Code, or the engineering design, it shall be done in accordance with Table 323.3.1 using the testing methods and acceptance criteria described in paras. 323.3.2 through 323.3.5.

323.3.2 Procedure. Impact testing of each product form of material for any specification (including welds in the components) shall be done using procedures and apparatus in accordance with ASTM A 370, and in conformance with impact testing requirements of the following specifications, except that specific requirements of this Code which conflict with requirements of those specifications shall take precedence.

Product Form	ASTM Spec. No.
Pipe	A 333
Tube	A 334
Fittings	A 420
Forgings	A 350
Castings	A 352
Bolting	A 320
Plate	A 20

[1] Titles of referenced AWS standards are as follows: AWS A5.4, Stainless Steel Electrodes for Shielded Metal Arc Welding; AWS A5.9, Bare Stainless Steel Welding Electrodes and Rods; AWS A5.11, Nickel and Nickel Alloy Welding Electrodes for Shielded Metal Arc Welding; AWS A5.14, Nickel and Nickel Alloy Bare Welding Electrodes and Rods; and AWS A5.22, Flux Cored Corrosion-Resisting Chromium and Chromium-Nickel Steel Electrodes.

Copyright ASME International
Provided by IHS under license with ASME
No reproduction or networking permitted without license from IHS Not for Resale

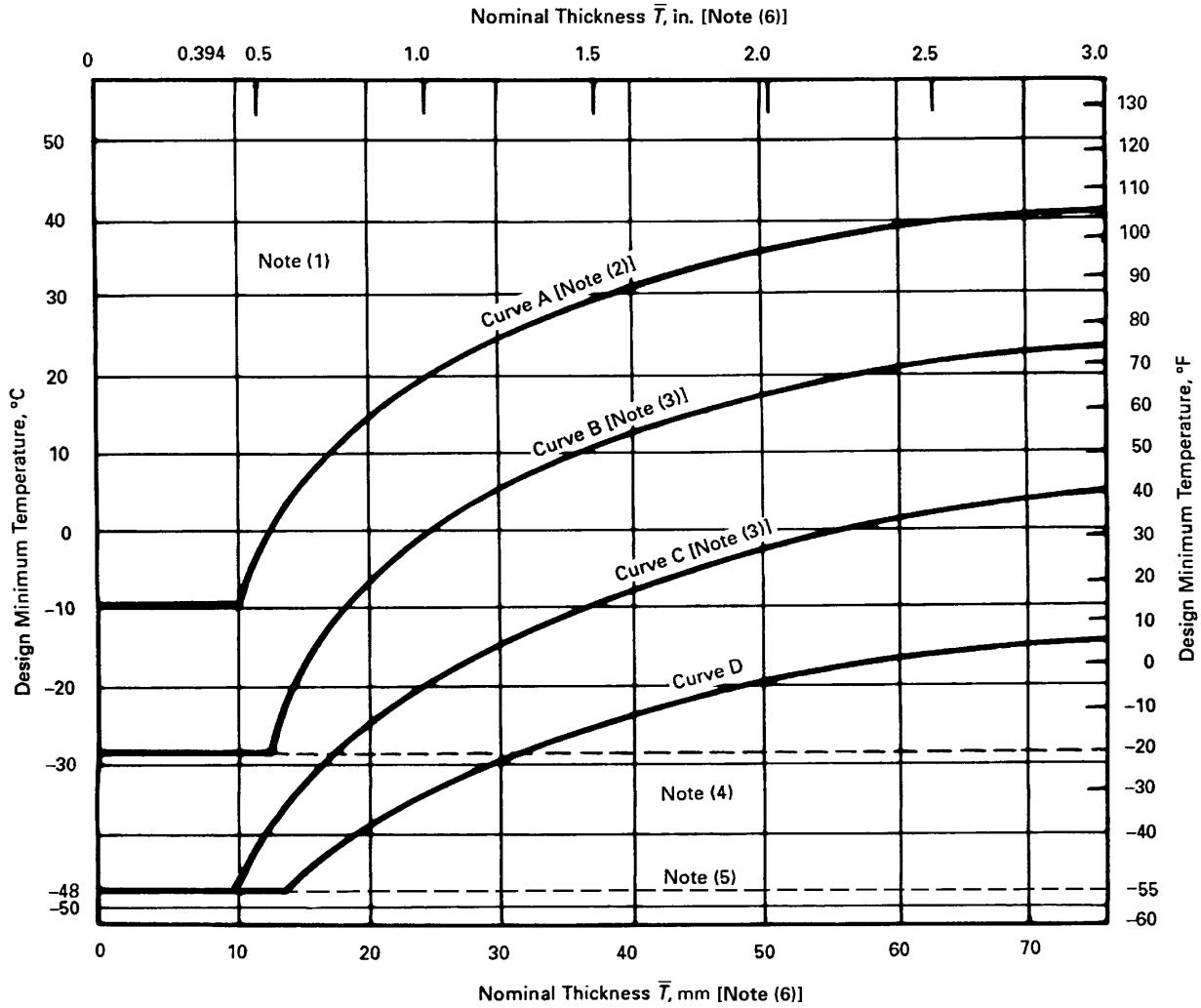

NOTES:

(1) Any carbon steel material may be used to a minimum temperature of −29°C (−20°F) for Category D Fluid Service.

(2) X Grades of API 5L, and ASTM A 381 materials, may be used in accordance with Curve B if normalized or quenched and tempered.

(3) The following materials may be used in accordance with Curve D if normalized:
- (a) ASTM A 516 Plate, all grades
- (b) ASTM A 671 Pipe, Grades CE55, CE60, and all grades made with A 516 plate
- (c) ASTM A 672 Pipe, Grades E55, E60, and all grades made with A 516 plate

(4) A welding procedure for the manufacture of pipe or components shall include impact testing of welds and HAZ for any design minimum temperature below −29°C (−20°F), except as provided in Table 323.2.2, A-3(b).

(5) Impact testing in accordance with para. 323.3 is required for any design minimum temperature below −48°C (−55°F), except as permitted by Note (3) in Table 323.2.2.

(6) For blind flanges and blanks, $\overline{T}$ shall be $\frac{1}{4}$ of the flange thickness.

Fig. 323.2.2A Minimum Temperatures Without Impact Testing for Carbon Steel Materials
(See Table A-1 for Designated Curve for a Listed Material; see Table 323.2.2A for Tabular Values)

Copyright ASME International
Provided by IHS under license with ASME
No reproduction or networking permitted without license from IHS
Not for Resale

Table 323.2.2A Tabular Values for Minimum Temperatures Without Impact Testing for Carbon Steel Materials (See Fig. 323.2.2A for Curves and Applicable Notes)

Nominal Thickness, T [Note (6)]		Design Minimum Temperature							
		Curve A [Note (2)]		Curve B [Note (3)]		Curve C [Note (3)]		Curve D	
mm	in.	°C	°F	°C	°F	°C	°F	°C	°F
6.4	0.25	−9.4	15	−28.9	−20	−48.3	−55	−48.3	−55
7.9	0.3125	−9.4	15	−28.9	−20	−48.3	−55	−48.3	−55
9.5	0.375	−9.4	15	−28.9	−20	−48.3	−55	−48.3	−55
10.0	0.394	−9.4	15	−28.9	−20	−48.3	−55	−48.3	−55
11.1	0.4375	−6.7	20	−28.9	−20	−41.7	−43	−48.3	−55
12.7	0.5	−1.1	30	−28.9	−20	−37.8	−36	−48.3	−55
14.3	0.5625	2.8	37	−21.7	−7	−35.0	−31	−45.6	−50
15.9	0.625	6.1	43	−16.7	2	−32.2	−26	−43.9	−47
17.5	0.6875	8.9	48	−12.8	9	−29.4	−21	−41.7	−43
19.1	0.75	11.7	53	−9.4	15	−27.2	−17	−40.0	−40
20.6	0.8125	14.4	58	−6.7	20	−25.0	−13	−38.3	−37
22.2	0.875	16.7	62	−3.9	25	−23.3	−10	−36.7	−34
23.8	0.9375	18.3	65	−1.7	29	−21.7	−7	−35.6	−32
25.4	1.0	20.0	68	0.6	33	−19.4	−3	−34.4	−30
27.0	1.0625	22.2	72	2.2	36	−18.3	−1	−33.3	−28
28.6	1.125	23.9	75	3.9	39	−16.7	2	−32.2	−26
30.2	1.1875	25.0	77	5.6	42	−15.6	4	−30.6	−23
31.8	1.25	26.7	80	6.7	44	−14.4	6	−29.4	−21
33.3	1.3125	27.8	82	7.8	46	−13.3	8	−28.3	−19
34.9	1.375	28.9	84	8.9	48	−12.2	10	−27.8	−18
36.5	1.4375	30.0	86	9.4	49	−11.1	12	−26.7	−16
38.1	1.5	31.1	88	10.6	51	−10.0	14	−25.6	−14
39.7	1.5625	32.2	90	11.7	53	−8.9	16	−25.0	−13
41.3	1.625	33.3	92	12.8	55	−8.3	17	−23.9	−11
42.9	1.6875	33.9	93	13.9	57	−7.2	19	−23.3	−10
44.5	1.75	34.4	94	14.4	58	−6.7	20	−22.2	−8
46.0	1.8125	35.6	96	15.0	59	−5.6	22	−21.7	−7
47.6	1.875	36.1	97	16.1	61	−5.0	23	−21.1	−6
49.2	1.9375	36.7	98	16.7	62	−4.4	24	−20.6	−5
50.8	2.0	37.2	99	17.2	63	−3.3	26	−20.0	−4
51.6	2.0325	37.8	100	17.8	64	−2.8	27	−19.4	−3
54.0	2.125	38.3	101	18.3	65	−2.2	28	−18.9	−2
55.6	2.1875	38.9	102	18.9	66	−1.7	29	−18.3	−1
57.2	2.25	38.9	102	19.4	67	−1.1	30	−17.8	0
58.7	2.3125	39.4	103	20.0	68	−0.6	31	−17.2	1
60.3	2.375	40.0	104	20.6	69	0.0	32	−16.7	2
61.9	2.4375	40.6	105	21.1	70	0.6	33	−16.1	3
63.5	2.5	40.6	105	21.7	71	1.1	34	−15.6	4
65.1	2.5625	41.1	106	21.7	71	1.7	35	−15.0	5
66.7	2.625	41.7	107	22.8	73	2.2	36	−14.4	6
68.3	2.6875	41.7	107	22.8	73	2.8	37	−13.9	7
69.9	2.75	42.2	108	23.3	74	3.3	38	−13.3	8
71.4	2.8125	42.2	108	23.9	75	3.9	39	−13.3	8
73.0	2.875	42.8	109	24.4	76	4.4	40	−12.8	9
74.6	2.9375	42.8	109	25.0	77	4.4	40	−12.2	10
76.2	3.0	43.3	110	25.0	77	5.0	41	−11.7	11

Copyright ASME International
Provided by IHS under license with ASME
No reproduction or networking permitted without license from IHS
Not for Resale

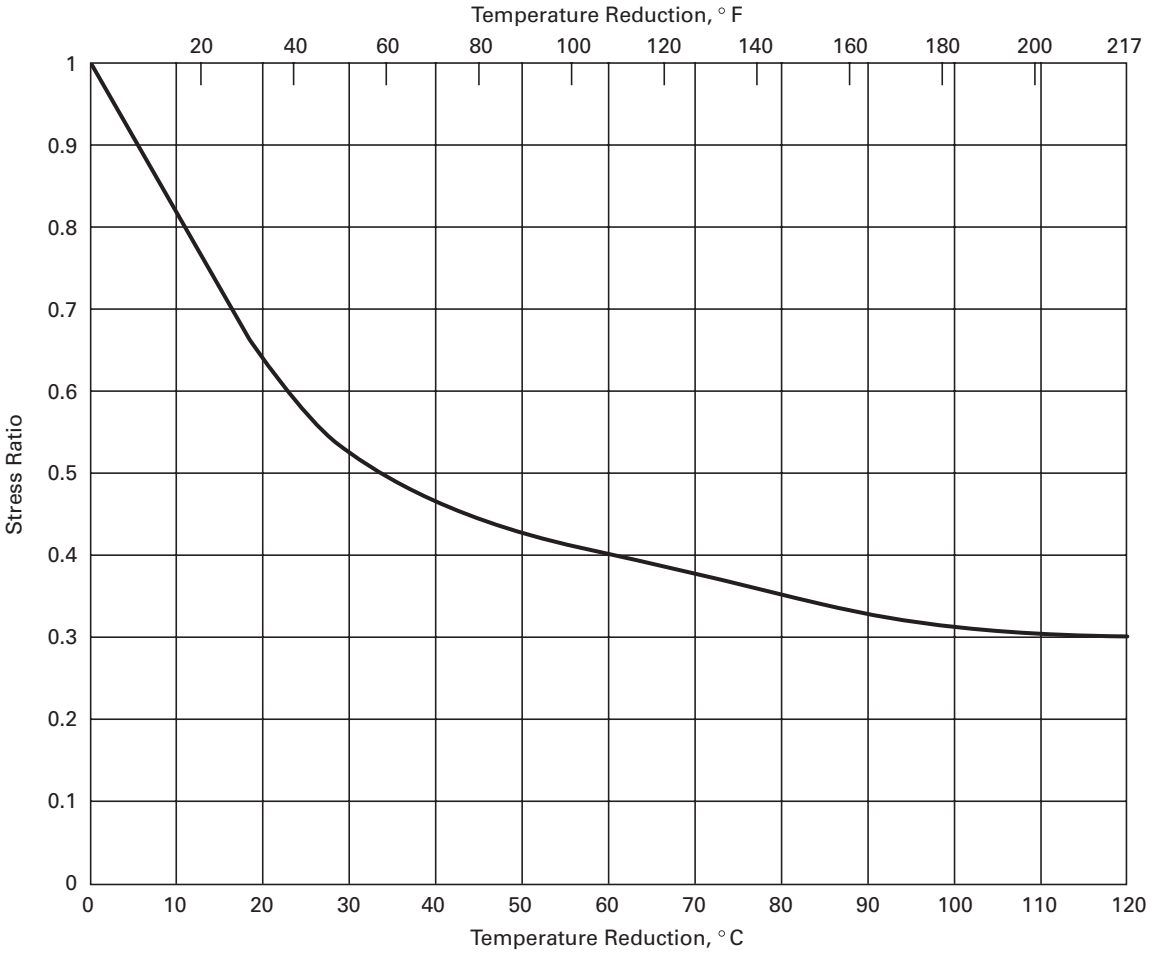

GENERAL NOTES:

(a) The Stress Ratio is defined as the maximum of the following:

(1) nominal pressure stress (based on minimum pipe wall thickness less allowances) divided by *S* at the design minimum temperature;

(2) for piping components with pressure ratings, the pressure for the condition under consideration divided by the pressure rating at the design minimum termperature;

(3) combined longitudinal stess due to pressure, dead weight, and displacement strain (stress intensification factors are not included in this calulation) divided by *S* at the design minimum temperature. In calculating longitudinal stress, the forces and moments in the piping system shall be calculated using nominal dimensions and the stresses shall be calculated using section properties based on the nominal dimensions less corrosion, erosion, and mechanical allowances.

(b) Loadings coincident with the metal temperature under consideration shall be used in determining the Stress Ratio as defined above.

Fig. 323.2.2B Reduction in Minimum Design Metal Temperature Without Impact Testing

Copyright ASME International
Provided by IHS under license with ASME
No reproduction or networking permitted without license from IHS
Not for Resale

(04)

Table 323.3.1 Impact Testing Requirements for Metals

	Test Characteristics	Column A Materials Tested by the Manufacturer [Note (1)] or Those in Table 323.2.2 Requiring Impact Tests Only on Welds	Column B Materials Not Tested by the Manufacturer or Those Tested But Heat Treated During or After Fabrication
Tests on Materials	Number of tests	**A-1** The greater of the number required by: (a) the material specification; or (b) the applicable specification listed in para. 323.3.2 [Note (2)].	**B-1** The number required by the applicable specification listed in para. 323.3.2 [Note (2)].
	Location and orientation of specimens	**A-2** As required by the applicable specification listed in para. 323.3.2.	
	Tests by	**A-3** The manufacturer	**B-3** The fabricator or erector
Tests on Welds in Fabrication or Assembly	Test piece for preparation of impact specimens	**A-4** One required for each welding procedure, for each type of filler metal (i.e., AWS E-XXXX classification), and for each flux to be used. Test pieces shall be subjected to essentially the same heat treatment (including time at temperature or temperatures and cooling rate) as the erected piping will have received.	
	Number of test pieces [Note (3)]	**A-5** (a) One piece, thickness *T*, for each range of material thickness from *T*/2 to *T* + 6 mm ($^1/_4$ in.). (b) Unless required by the engineering design, pieces need not be made from each lot, nor from material for each job, provided that welds have been tested as required by Section 4 above, for the same type and grade of material (or for the same P-Number and Group Number in BPV Code, Section IX), and of the same thickness range, and that records of the tests are made available.	**B-5** (a) One piece from each lot of material in each specification and grade including heat treatment [Note (4)] unless; (b) materials are qualified by the fabricator or erector as specified in Sections B-1 and B-2 above, in which case the requirements of Section A-5 apply.
	Location and orientation of specimens	**6** (a) Weld metal: across the weld, with notch in the weld metal; notch axis shall be normal to material surface, with one face of specimen ≤ 1.5 mm ($^1/_{16}$ in.) from the material surface. (b) Heat affected zone (HAZ): across the weld and long enough to locate notch in the HAZ after etching; notch axis shall be approximately normal to material surface and shall include as much as possible of the HAZ in the fracture.	
	Tests by	**7** The fabricator or erector	

NOTES:

(1) A certified report of impact tests performed (after being appropriately heat treated as required by Table 323.2.2, item B-3) by the manufacturer shall be obtained as evidence that the material (including any welds used in its manufacture) meets the requirements of this Code, and that:

(a) the tests were conducted on specimens representative of the material delivered to and used by the fabricator or erector, or

(b) the tests were conducted on specimens removed from test pieces of the material which received heat treatment separately in the same manner as the material (including heat treatment by the manufacturer) so as to be representative of the finished piping.

(2) If welding is used in manufacture, fabrication, or erection, tests of the HAZ will suffice for the tests of the base material.

(3) The test piece shall be large enough to permit preparing three specimens from the weld metal and three from the HAZ (if required) per para. 323.3. If this is not possible, preparation of additional test pieces is required.

(4) For purposes of this requirement, "lot" means the quantity of material described under the "Number of tests" provision of the specification applicable to the product term (i.e., plate, pipe, etc.) listed in para. 323.3.2.

Copyright ASME International
Provided by IHS under license with ASME
No reproduction or networking permitted without license from IHS
Not for Resale

GENERAL NOTE: Titles of referenced standards not listed in the Specifications Index for Appendix A are: A 20 General Requirements for Steel Plates for Pressure Vessels and A 370 Test Methods and Definitions for Mechanical Testing of Steel Products.

323.3.3 Test Specimens. Each set of impact test specimens shall consist of three specimen bars. All impact tests shall be made using standard 10 mm (0.394 in.) square cross section Charpy V-notch specimen bars, except when the material shape or thickness does not permit. Charpy impact tests may be performed on specimens of full material thickness, which may be machined to remove surface irregularities. Alternatively, such material may be reduced in thickness to produce the largest possible Charpy subsize specimen. See Table 323.3.4.

323.3.4 Test Temperatures. For all Charpy impact tests, the test temperature criteria in para. 323.3.4(a) or (b) shall be observed. The test specimens, as well as the handling tongs, shall be cooled for a sufficient length of time to reach the test temperature.

(a) For Materials of Thickness Equal to or Greater Than 10 mm (0.394 in.). Where the largest attainable Charpy V-notch specimen has a width along the notch of at least 8 mm (0.315 in.), the Charpy test using such a specimen shall be conducted at a temperature not higher than the design minimum temperature. Where the largest possible test specimen has a width along the notch less than 8 mm, the test shall be conducted at a temperature lower than the design minimum temperature by the amount shown in Table 323.3.4 for that specimen width.

(b) For Materials With Thickness Less Than 10 mm (0.394 in.). Where the largest attainable Charpy V-notch specimen has a width along the notch of at least 80% of the material thickness, the Charpy test of such a specimen shall be conducted at a temperature not higher than the design minimum temperature. Where the largest possible test specimen has a width along the notch of less than 80% of the material thickness, the test shall be conducted at a temperature lower than the design minimum temperature by an amount equal to the difference (referring to Table 323.3.4) between the temperature reduction corresponding to the actual material thickness and the temperature reduction corresponding to the Charpy specimen width actually tested.

Table 323.3.4 Charpy Impact Test Temperature Reduction

Actual Material Thickness [See Para. 323.3.4(b)] or Charpy Impact Specimen Width Along the Notch [Note (1)]		Temperature Reduction Below Design Minimum Temperature	
mm	in.	°C	°F
10 (full size standard bar)	0.394	0	0
9	0.354	0	0
8	0.315	0	0
7.5 (3/4 size bar)	0.295	2.8	5
7	0.276	4.4	8
6.67 (2/3 size bar)	0.262	5.6	10
6	0.236	8.3	15
5 (1/2 size bar)	0.197	11.1	20
4	0.157	16.7	30
3.33 (1/3 size bar)	0.131	19.4	35
3	0.118	22.2	40
2.5 (1/4 size bar)	0.098	27.8	50

GENERAL NOTE: These temperature reduction criteria do not apply when Table 323.3.5 specifies lateral expansion for minimum required values.

NOTES:

(1) Straight line interpolation for intermediate values is permitted.

323.3.5 Acceptance Criteria

(a) Minimum Energy Requirements. Except for bolting materials, the applicable minimum energy requirement for carbon and low alloy steels with specified minimum tensile strengths less than 656 MPa (95 ksi) shall be those shown in Table 323.3.5.

(b) Lateral Expansion Requirements. Other carbon and low alloy steels having specified minimum tensile strengths equal to or greater than 656 MPa (95 ksi), all bolting materials, and all high alloy steels (P-Nos. 6, 7, and 8) shall have a lateral expansion opposite the notch of not less than 0.38 mm (0.015 in.) for all specimen sizes. The lateral expansion is the increase in width of the broken impact specimen over that of the unbroken specimen measured on the compression side, parallel to the line constituting the bottom of the V-notch (see ASTM A 370).

(c) Weld Impact Test Requirements. Where two base metals having different required impact energy values are joined by welding, the impact test energy requirements shall conform to the requirements of the base material having a specified minimum tensile strength most closely matching the specified minimum tensile strength of the weld metal.

(d) Retests

(1) For Absorbed Energy Criteria. When the average value of the three specimens equals or exceeds the minimum value permitted for a single specimen and the value for more than one specimen is below the required average value, or when the value for one specimen is below the minimum value permitted for a single specimen, a retest of three additional specimens shall be made. The value for each of these retest specimens shall equal or exceed the required average value.

Copyright ASME International
Provided by IHS under license with ASME
No reproduction or networking permitted without license from IHS Not for Resale

Table 323.3.5 Minimum Required Charpy V-Notch Impact Values

Specified Minimum Tensile Strength	No. of Specimens [Note (1)]	Energy [Note (2)]			
		Fully Deoxidized Steels		Other Than Fully Deoxidized Steels	
		Joules	ft-lbf	Joules	ft-lbf
(a) Carbon and Low Alloy Steels					
448 MPa (65 ksi) and less	Average for 3 specimens	18	13	14	10
	Minimum for 1 specimen	16	10	10	7
Over 448 to 517 MPa (75 ksi)	Average for 3 specimens	20	15	18	13
	Minimum for 1 specimen	16	12	14	10
Over 517 but not incl. 656 MPa (95 ksi)	Average for 3 specimens	27	20	...	...
	Minimum for 1 specimen	20	15	...	...
		Lateral Expansion			
656 MPa and over [Note (3)]	Minimum for 3 specimens	0.38 mm (0.015 in.)			
(b) Steels in P-Nos. 6, 7, and 8	Minimum for 3 specimens	0.38 mm (0.015 in.)			

NOTES:
(1) See para. 323.3.5(d) for permissible retests.
(2) Energy values in this Table are for standard size specimens. For subsize specimens, these values shall be multiplied by the ratio of the actual specimen width to that of a full-size specimen, 10 mm (0.394 in.).
(3) For bolting of this strength level in nominal sizes M 52 (2 in.) and under, the impact requirements of ASTM A 320 may be applied. For bolting over M 52, requirements of this Table shall apply.

(2) For Lateral Expansion Criterion. If the value of lateral expansion for one specimen in a group of three is below 0.38 mm (0.015 in.) but not below 0.25 mm (0.01 in.), and if the average value for three specimens equals or exceeds 0.38 mm (0.015 in.), a retest of three additional specimens may be made, each of which must equal or exceed the specified minimum value of 0.38 mm (0.015 in.). In the case of heat treated materials, if the required values are not obtained in the retest or if the values in the initial test are below the minimum allowed for retest, the material may be reheat treated and retested. After reheat treatment, a set of three specimens shall be made. For acceptance, the lateral expansion of each of the specimens must equal or exceed the specified minimum value of 0.38 mm (0.015 in.).

(3) For Erratic Test Results. When an erratic result is caused by a defective specimen or there is uncertainty in the test procedure, a retest will be allowed.

323.4 Fluid Service Requirements for Materials

323.4.1 General. Requirements in para. 323.4 apply to pressure containing parts. They do not apply to materials used for supports, gaskets, packing, or bolting. See also Appendix F, para. F323.4.

323.4.2 Specific Requirements

(a) Ductile Iron. Ductile iron shall not be used for pressure containing parts at temperatures below −29°C (−20°F) (except austenitic ductile iron) or above 343°C (650°F). Austenitic ductile iron conforming to ASTM A 571 may be used at temperatures below −29°C (−20°F) down to the temperature of the impact test conducted in accordance with that specification but not below −196°C (−320°F).

Valves having bodies and bonnets or covers made of materials conforming to ASTM A 395 and meeting the requirements of ASME B16.42 and additional requirements of ASME B16.34 Standard Class, API 594, API 599, or API 609 may be used within the pressure-temperature ratings given in ASME B16.42.

Welding shall not be performed in the fabrication or repair of ductile iron components nor in assembly of such components in a piping system.

(b) Other Cast Irons. The following shall not be used under severe cyclic conditions. If safeguarding is provided against excessive heat and thermal shock and mechanical shock and abuse, they may be used in other services subject to the following requirements.

(1) Cast iron shall not be used above ground within process unit limits in hydrocarbon or other flammable fluid service at temperatures above 149°C (300°F) nor at gage pressures above 1035 kPa (150 psi). In other locations the pressure limit shall be 2760 kPa (400 psi).

(2) Malleable iron shall not be used in any fluid service at temperatures below −29°C (−20°F) or above 343°C (650°F) and shall not be used in flammable fluid service at temperatures above 149°C (300°F) nor at gage pressures above 2760 kPa (400 psi).

Copyright ASME International
Provided by IHS under license with ASME
No reproduction or networking permitted without license from IHS Not for Resale

(3) High silicon iron (14.5% Si) shall not be used in flammable fluid service. The manufacturer should be consulted for pressure-temperature ratings and for precautionary measures when using this material.

(c) Other Materials

(1) If welding or thermal cutting is performed on aluminum castings, the stress values in Appendix A and component ratings listed in Table 326.1 are not applicable. It is the designer's responsibility to establish such stresses and ratings consistent with the requirements of this Code.

(2) Lead and tin and their alloys shall not be used in flammable fluid services.

323.4.3 Cladding and Lining Materials. Materials with metallic cladding or metallic lining may be used in accordance with the following provisions.

(a) If piping components are made from integrally clad plate conforming to

(1) ASTM A 263, Corrosion-Resisting Chromium Steel Clad Plate, Sheet, and Strip,

(2) ASTM A 264, Stainless Chromium-Nickel Steel Clad Plate, Sheet, and Strip,

(3) ASTM A 265, Nickel and Nickel-Base Alloy Clad Plate, Sheet, and Strip,

pressure design in accordance with rules in para. 304 may be based upon the total thickness of base metal and cladding after any allowance for corrosion has been deducted, provided that both the base metal and the cladding metal are acceptable for Code use under para. 323.1, and provided that the clad plate has been shear tested and meets all shear test requirements of the applicable ASTM specification. The allowable stress for each material (base and cladding) shall be taken from Appendix A, or determined in accordance with the rules in para. 302.3, provided, however, that the allowable stress used for the cladding portion of the design thickness shall never be greater than the allowable stress used for the base portion.

(b) For all other metallic clad or lined piping components, the base metal shall be an acceptable Code material as defined in para. 323.1 and the thickness used in pressure design in accordance with para. 304 shall not include the thickness of the cladding or lining. The allowable stress used shall be that for the base metal at the design temperature. For such components, the cladding or lining may be any material that, in the judgment of the user, is suitable for the intended service and for the method of manufacture and assembly of the piping component.

(c) Except for components designed in accordance with provisions of para. 323 4.3(a), fluid service requirements for materials stated in this Code shall not restrict their use as cladding or lining in pipe or other components. Fluid service requirements for the outer material (including those for components and joints) shall govern, except that temperature limitations of both inner and outer materials, and of any bond between them, shall be considered.

(d) Fabrication by welding of clad or lined piping components and the inspection and testing of such components shall be done in accordance with applicable provisions of the BPV Code, Section VIII, Division 1, UCL-30 through UCL-52, or the provisions of Chapters V and VI of this Code, whichever are more stringent.

323.5 Deterioration of Materials in Service (04)

Selection of material to resist deterioration in service is not within the scope of this Code. See para. 300(c)(6). Recommendations based on experience are presented for guidance in Appendix F, para. F323.

325 MATERIALS — MISCELLANEOUS

325.1 Joining and Auxiliary Materials

When selecting materials such as adhesives, cements, solvents, solders, brazing materials, packing, and O-rings for making or sealing joints, the designer shall consider their suitability for the fluid service. (Consideration should also be given to the possible effects of the joining or auxiliary materials on the fluid handled.)

Copyright ASME International
Provided by IHS under license with ASME
No reproduction or networking permitted without license from IHS
Not for Resale

Chapter IV
Standards for Piping Components

326 DIMENSIONS AND RATINGS OF COMPONENTS

326.1 Dimensional Requirements

326.1.1 Listed Piping Components. Dimensional standards[1] for piping components are listed in Table 326.1. Dimensional requirements contained in specifications listed in Appendix A shall also be considered requirements of this Code.

326.1.2 Unlisted Piping Components. Dimensions of piping components not listed in Table 326.1 or Appendix A shall conform to those of comparable listed components insofar as practicable. In any case, dimensions shall be such as to provide strength and performance equivalent to standard components except as provided in paras. 303 and 304.

326.1.3 Threads. The dimensions of piping connection threads not otherwise covered by a governing component standard or specification shall conform to the requirements of applicable standards listed in Table 326.1 or Appendix A.

[1]It is not practical to refer to a specific edition of each standard throughout the Code text. Instead, the approved edition references, along with the names and address of sponsoring organizations, are shown in Appendix E.

326.2 Ratings of Components

326.2.1 Listed Components. The pressure-temperature ratings of components listed in Table 326.1 are accepted for pressure design in accordance with para. 303.

326.2.2 Unlisted Components. The pressure-temperature ratings of unlisted piping components shall conform to the applicable provisions of para. 304.

326.3 Reference Documents

The documents listed in Table 326.1 contain references to codes, standards, and specifications not listed in Table 326.1. Such unlisted codes, standards, and specifications shall be used only in the context of the listed documents in which they appear.

The design, materials, fabrication, assembly, examination, inspection, and testing requirements of this Code are not applicable to components manufactured in accordance with the documents listed in Table 326.1, unless specifically stated in this Code, or the listed document.

Copyright ASME International
Provided by IHS under license with ASME
No reproduction or networking permitted without license from IHS
Not for Resale

Table 326.1 Component Standards (04)

Standard or Specification	Designation
Bolting	
Square and Hex Bolts and Screws (Inch Series)	ASME B18.2.1
Square and Hex Nuts (Inch Series)	ASME B18.2.2
Metallic Fittings, Valves, and Flanges	
Cast Iron Pipe Flanges and Flanged Fittings	ASME B16.1
Malleable Iron Threaded Fittings	ASME B16.3
Gray Iron Threaded Fittings	ASME B16.4
Pipe Flanges and Flanged Fittings	ASME B16.5
Factory-Made Wrought Steel Buttwelding Fittings	ASME B16.9
Face-to-Face and End-To-End Dimensions of Valves	ASME B16.10
Forged Fittings, Socket-Welding and Threaded	ASME B16.11
Ferrous Pipe Plugs, Bushings, and Locknuts With Pipe Threads	ASME B16.14
Cast Bronze Threaded Fittings, Class 125 and 250 [Notes (1), (2)]	ASME B16.15
Cast Copper Alloy Solder Joint Pressure Fittings	ASME B16.18
Wrought Copper and Copper Alloy Solder Joint Pressure Fittings	ASME B16.22
Cast Copper Alloy Pipe Flanges and Flanged Fittings: Classes 150, 300, 600, 900, 1500, and 2500	ASME B16.24
Cast Copper Alloy Fittings for Flared Copper Tubes	ASME B16.26
Wrought Steel Buttwelding Short Radius Elbows and Returns [Note (3)]	ASME B16.28
Valves-Flanged, Threaded, and Welding End	ASME B16.34
Orifice Flanges, Class 300, 600, 900, 1500, and 2500	ASME B16.36
Malleable Iron Threaded Pipe Unions, Class 150, 250, and 300	ASME B16.39
Ductile Iron Pipe Flanges and Flanged Fittings, Class 150 and 300	ASME B16.42
Large Diameter Steel Flanges, NPS 26 Through NPS 60	ASME B16.47
Steel Line Blanks	ASME B16.48
Flanged Steel Pressure-Relief Valves	API 526
Wafer and Wafer-Lug Check Valves	API 594
Metal Plug Valves—Flanged, Threaded, and Welding Ends	API 599
Bolted Bonnet Steel Gate Valves for Petroleum and Natural Gas Industries	API 600
Compact Steel Gate Valves — Flanged, Threaded, Welding and Extended Body Ends	API 602
Class 150, Cast, Corrosion-Resistant, Flanged-End Gate Valves	API 603
Metal Ball Valves-Flanged, Threaded, and Welding End	API 608
Lug- and Wafer-Type Butterfly Valves	API 609
Ductile-Iron and Gray-Iron Fittings, 3 Inch Through 48 Inch (75 mm Through 1200 mm), for Water and Other Liquids	AWWA C110
Flanged Ductile-Iron with Ductile-Iron or Gray-Iron Threaded Flanges	AWWA C115
Steel Pipe Flanges for Waterworks Service, Sizes 4 inch Through 144 inch (100 mm Through 3,600 mm)	AWWA C207
Dimensions for Fabricated Steel Water Pipe Fittings	AWWA C208
Metal-Seated Gate Valves for Water Supply Service	AWWA C500
Rubber-Seated Butterfly Valves	AWWA C504
Standard Finishes for Contact Faces of Pipe Flanges and Connecting-End Flanges of Valves and Fittings	MSS SP-6
Spot Facing for Bronze, Iron and Steel Flanges	MSS SP-9
Standard Marking Systems for Valves, Fittings, Flanges, and Unions	MSS SP-25
Class 150 (PN 20) Corrosion Resistant Gate, Globe, Angle and Check Valves With Flanged and Butt Weld Ends	MSS SP-42
Wrought Stainless Steel Butt-Welding Fittings Including Reference to Other Corrosion Resistant Materials	MSS SP-43
Steel Pipe Line Flanges	MSS SP-44
Bypass and Drain Connections	MSS SP-45
Class 150LW Corrosion Resistant Flanges and Cast Flanged Fittings	MSS SP-51
High Pressure Chemical Industry Flanges and Threaded Stubs for Use with Lens Gaskets	MSS SP-65
Cast Iron Gate Valves, Flanged and Threaded Ends	MSS SP-70
Gray Iron Swing Check Valves, Flanged and Threaded Ends	MSS SP-71
Ball Valves With Flanged or Buttwelding Ends for General Service	MSS SP-72

Copyright ASME International
Provided by IHS under license with ASME
No reproduction or networking permitted without license from IHS
Not for Resale

(04)

Table 326.1 Component Standards (Cont'd)

Standard or Specification	Designation
Metallic Fittings, Valves, and Flanges (Cont'd)	
Specifications for High Test Wrought Buttwelding Fittings	MSS SP-75
Socket-Welding Reducer Inserts	MSS SP-79
Bronze Gate, Globe, Angle and Check Valves	MSS SP-80
Stainless Steel, Bonnetless, Flanged, Knife Gate Valves	MSS SP-81
Class 3000 Steel Pipe Unions, Socket-Welding and Threaded	MSS SP-83
Gray Iron Globe and Angle Valves, Flanged and Threaded Ends	MSS SP-85
Diaphragm Type Valves	MSS SP-88
Swage(d) Nipples and Bull Plugs	MSS SP-95
Integrally Reinforced Forged Branch Outlet Fittings — Socket Welding, Threaded, and Buttwelding Ends	MSS SP-97
Instrument Valves for Code Applications	MSS SP-105
Factory-Made Wrought Belled End Socket Welding Fittings [Note (4)]	MSS SP-119
Refrigeration Tube Fittings — General Specifications	SAE J513
Hydraulic Tube Fittings	SAE J514
Hydraulic Flanged Tube, Pipe, and Hose Connections, Four-Bolt Split Flanged Type	SAE J518
Metallic Pipe and Tubes [Note (5)]	
Welded and Seamless Wrought Steel Pipe	ASME B36.10M
Stainless Steel Pipe	ASME B36.19M
Flanged Ductile-Iron Pipe with Ductile-Iron or Gray-Iron Threaded Flanges	AWWA C115
Thickness Design of Ductile-Iron Pipe	AWWA C150
Ductile-Iron Pipe, Centrifugally Cast, for Water	AWWA C151
Steel Water Pipe 6 inches (150 mm) and Larger	AWWA C200
Miscellaneous	
Unified Inch Screw Threads (UN and UNR Thread Form)	ASME B1.1
Pipe Threads, General Purpose (Inch)	ASME B1.20.1
Dryseal Pipe Threads (Inch)	ASME B1.20.3
Hose Coupling Screw Threads (Inch)	ASME B1.20.7
Metallic Gaskets for Pipe Flanges — Ring: Joint, Spiral Wound, and Jacketed	ASME B16.20
Nonmetallic Flat Gaskets for Pipe Flanges	ASME B16.21
Buttwelding Ends	ASME B16.25
Surface Texture (Surface Roughness, Waviness, and Lay)	ASME B46.1
Specification for Threading, Gaging and Thread Inspection of Casing, Tubing, and Line Pipe Threads	API 5B
Rubber Gasket Joints for Ductile-Iron Pressure Pipe and Fittings	AWWA C111
Flexible Metal Hose [Notes (1), (6), and (7)]	BS 6501, Part 1
Pipe Hangers and Supports — Materials, Design, and Manufacture	MSS SP-58
Brazing Joints for Copper and Copper Alloy Solder Joint Fittings	MSS SP-73
Standard for Fire Hose Connections	NFPA 1963

GENERAL NOTE: It is not practical to refer to a specific edition of each standard throughout the Code text. Instead, the approved edition references, along with the names and addresses of the sponsoring organizations, are shown in Appendix E.

NOTES:

(1) This standard allows the use of unlisted materials; see para. 323.1.2.

(2) This standard allows straight pipe threads in sizes ≤ DN 15 (NPS $\frac{1}{2}$); see para. 314.2.1(d).

(3) *Cautionary Note:* Pressure ratings of components manufactured in accordance with editions prior to the 1994 Edition of this standard were derated to 80% of equivalent seamless pipe. This derating is no longer required for components manufactured in accordance with the 1994 Edition.

(4) MSS SP-119 includes three classes of fittings: MP, MARINE, and CR. Only the MP class fittings are considered a "Listed Component" for the purpose of this Code. *Cautionary Note*: See MSS SP-119 (Section 6) for special provisions concerning ratings. (In accordance with MSS SP-119, the pressure ratings for MP class fittings are 87.5% of those calculated for straight seamless pipe of *minimum* wall thickness.)

(5) See also Appendix A.

(6) Welding and brazing to be in accordance with paras. 328 and 333, respectively in lieu of the referenced specifications in this standard.

(7) This standard contains recommended materials of construction for certain chemical services; the responsibility for the ultimate selection of material is the responsibility of the Owner and is, therefore, not within the scope of this Code.

Copyright ASME International
Provided by IHS under license with ASME
No reproduction or networking permitted without license from IHS
Not for Resale

Chapter V
Fabrication, Assembly, and Erection

327 GENERAL

Metallic piping materials and components are prepared for assembly and erection by one or more of the fabrication processes covered in paras. 328, 330, 331, 332, and 333. When any of these processes is used in assembly or erection, requirements are the same as for fabrication.

328 WELDING

Welding shall conform to paras. 328.1 through 328.6 in accordance with applicable requirements of para. 311.2.

328.1 Welding Responsibility

Each employer is responsible for the welding done by the personnel of his organization and, except as provided in paras. 328.2.2 and 328.2.3, shall conduct the tests required to qualify welding procedures, and to qualify and as necessary requalify welders and welding operators.

328.2 Welding Qualifications

328.2.1 Qualification Requirements

(a) Qualification of the welding procedures to be used and of the performance of welders and welding operators shall conform to the requirements of the BPV Code, Section IX except as modified herein.

(b) Where the base metal will not withstand the 180 deg. guided bend required by Section IX, a qualifying welded specimen is required to undergo the same degree of bending as the base metal, within 5 deg.

(c) The requirements for preheating in para. 330 and for heat treatment in para. 331, as well as such requirements in the engineering design, shall apply in qualifying welding procedures.

(d) When impact testing is required by the Code or the engineering design, those requirements shall be met in qualifying welding procedures.

(e) If consumable inserts [Fig. 328.3.2 sketch (d), (e), (f), or (g)] or their integrally machined equivalents, or backing rings, are used, their suitability shall be demonstrated by procedure qualification, except that a procedure qualified without use of a backing ring is also qualified for use with a backing ring in a single-welded butt joint.

(f) To reduce the number of welding procedure qualifications required, P-Numbers or S-Numbers, and Group Numbers are assigned, in the BPV Code, Section IX, to groupings of metals generally based on composition, weldability, and mechanical properties, insofar as practicable. The P-Numbers or S-Numbers for most metals are listed for the convenience of the Code user in a separate column in Table A-1. See Section IX, QW/QB-422, for Group Numbers for respective P-Numbers and S-Numbers. Use of Section IX, QW-420.2, is required for this Code.

328.2.2 Procedure Qualification by Others. Each employer is responsible for qualifying any welding procedure that personnel of the organization will use. Subject to the specific approval of the Inspector, welding procedures qualified by others may be used, provided that the following conditions are met.

(a) The Inspector shall be satisfied that

(1) the proposed welding procedure specification (WPS) has been prepared, qualified, and executed by a responsible, recognized organization with expertise in the field of welding

(2) the employer has not made any change in the welding procedure

(b) The base material P-Number is either 1, 3, 4 Gr. No. 1 ($1\frac{1}{4}$ Cr max.), or 8; and impact testing is not required.

(c) The base metals to be joined are of the same P-Number, except that P-Nos. 1, 3, and 4 Gr. No. 1 may be welded to each other as permitted by Section IX.

(d) The material to be welded is not more than 19 mm ($\frac{3}{4}$ in.) in thickness. Postweld heat treatment shall not be required.

(e) The design pressure does not exceed the ASME B16.5 PN 50 (Class 300) rating for the material at design temperature; and the design temperature is in the range −29°C to 399°C (−20°F to 750°F), inclusive.

(f) The welding process is SMAW or GTAW or a combination thereof.

Copyright ASME International
Provided by IHS under license with ASME
No reproduction or networking permitted without license from IHS
Not for Resale

(g) Welding electrodes for the SMAW process are selected from the following classifications.

AWS A5.1[1]	AWS A5.4[1]	AWS A5.5[1]
E6010	E308-15, -16	E7010-A1
E6011	E308L-15, -16	E7018-A1
E7015	E309-15, -16	E8016-B1
E7016	E310-15, -16	E8018-B1
E7018	E-16-8-2-15, -16	E8015-B2L
	E316-15, -16	E8016-B2
	E316L-15, -16	E8018-B2
	E347-15, -16	E8018-B2L

(h) By signature, the employer accepts responsibility for both the WPS and the procedure qualification record (PQR).

(i) The employer has at least one currently employed welder or welding operator who, while in his employ, has satisfactorily passed a performance qualification test using the procedure and the P-Number material specified in the WPS. The performance bend test required by Section IX, QW-302 shall be used for this purpose. Qualification by radiography is not acceptable.

328.2.3 Performance Qualification by Others. To avoid duplication of effort, an employer may accept a performance qualification made for another employer, provided that the Inspector specifically approves. Acceptance is limited to qualification on piping using the same or equivalent procedure wherein the essential variables are within the limits in Section IX. The employer shall obtain a copy from the previous employer of the performance qualification test record, showing the name of the employer, name of the welder or welding operator, procedure identification, date of successful qualification, and the date that the individual last used the procedure on pressure piping.

328.2.4 Qualification Records. The employer shall maintain a self-certified record, available to the owner (and the owner's agent) and the Inspector, of the procedures used and the welders and welding operators employed, showing the date and results of procedure and performance qualifications, and the identification symbol assigned to each welder and welding operator.

328.3 Welding Materials

328.3.1 Filler Metal. Filler metal shall conform to the requirements of Section IX. A filler metal not yet incorporated in Section IX may be used with the owner's approval if a procedure qualification test is first successfully made.

328.3.2 Weld Backing Material. When backing rings are used, they shall conform to the following.

(a) Ferrous Metal Backing Rings. These shall be of weldable quality. Sulfur content shall not exceed 0.05%.

(b) If two abutting surfaces are to be welded to a third member used as a backing ring and one or two of the three members are ferritic and the other member or members are austenitic, the satisfactory use of such materials shall be demonstrated by welding procedure qualified as required by para. 328.2.

Backing rings may be of the continuous machined or split-band type. Some commonly used types are shown in Fig. 328.3.2.

(c) Nonferrous and Nonmetallic Backing Rings. Backing rings of nonferrous or nonmetallic material may be used, provided the designer approves their use and the welding procedure using them is qualified as required by para. 328.2.

328.3.3 Consumable Inserts. Consumable inserts may be used, provided they are of the same nominal composition as the filler metal, will not cause detrimental alloying of the weld metal, and the welding procedure using them is qualified as required by para. 328.2. Some commonly used types are shown in Fig. 328.3.2.

328.4 Preparation for Welding

328.4.1 Cleaning. Internal and external surfaces to be thermally cut or welded shall be clean and free from paint, oil, rust, scale, and other material that would be detrimental to either the weld or the base metal when heat is applied.

328.4.2 End Preparation

(a) General

(1) End preparation is acceptable only if the surface is reasonably smooth and true, and slag from oxygen or arc cutting is cleaned from thermally cut surfaces. Discoloration remaining on a thermally cut surface is not considered detrimental oxidation.

(2) End preparation for groove welds specified in ASME B16.25, or any other which meets the WPS, is acceptable. [For convenience, the basic bevel angles of ASME B16.25 and some additional J-bevel angles are shown in Fig. 328.4.2 sketches (a) and (b).]

(b) Circumferential Welds

(1) If component ends are trimmed as shown in Fig. 328.3.2 sketch (a) or (b) to fit backing rings or consumable inserts, or as shown in Fig. 328.4.3 sketch (a) or (b) to correct internal misalignment, such trimming shall not reduce the finished wall thickness below the required minimum wall thickness t_m.

(2) Component ends may be bored to allow for a completely recessed backing ring, provided the remaining net thickness of the finished ends is not less than t_m.

(3) It is permissible to size pipe ends of the same nominal size to improve alignment if wall thickness requirements are maintained.

[1] AWS A5.1, Carbon Steel Electrodes for Shielded Metal Arc Welding; AWS A5.4, Stainless Steel Electrodes for Shielded Metal Arc Welding; and AWS A5.5, Low Alloy Steel Covered Arc Welding Electrodes.

Copyright ASME International
Provided by IHS under license with ASME
No reproduction or networking permitted without license from IHS
Not for Resale

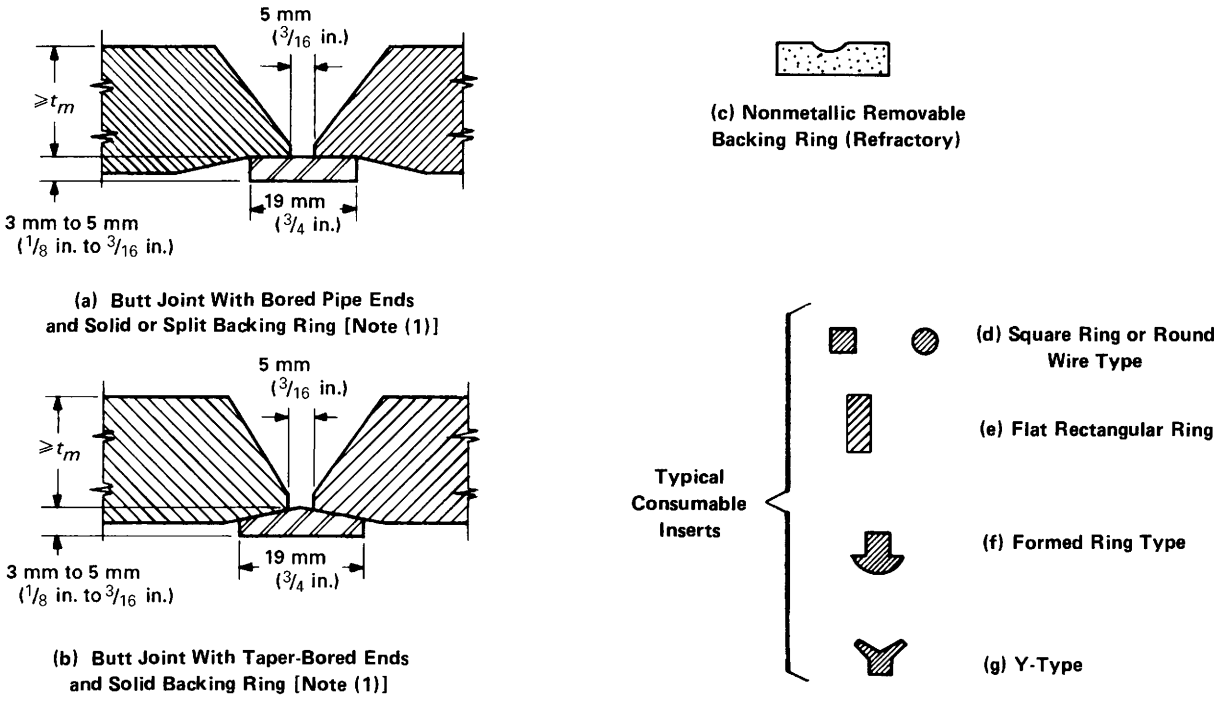

NOTE:
(1) Refer to ASME B16.25 for detailed dimensional information on welding ends.

Fig. 328.3.2 Typical Backing Rings and Consumable Inserts

(4) Where necessary, weld metal may be deposited inside or outside of the component to permit alignment or provide for machining to ensure satisfactory seating of rings or inserts.

(5) When a girth or miter groove weld joins components of unequal wall thickness and one is more than 1½ times the thickness of the other, end preparation and geometry shall be in accordance with acceptable designs for unequal wall thickness in ASME B16.25.

(04) *(6)* Buttweld fittings manufactured in accordance with ASME B16.9 may be trimmed to produce an angular joint offset in their connections to pipe or to other buttweld fittings without being subject to design qualifications in accordance with para. 304.7.2 provided the total angular offset produced between the two jointed parts does not exceed three degrees.

328.4.3 Alignment

(a) Circumferential Welds

(1) Inside surfaces of components at ends to be joined in girth or miter groove welds shall be aligned within the dimensional limits in the WPS and the engineering design.

(2) If the external surfaces of the components are not aligned, the weld shall be tapered between them.

(b) Longitudinal Welds. Alignment of longitudinal groove welds (not made in accordance with a standard listed in Table A-1 or Table 326.1) shall conform to the requirements of para. 328.4.3(a).

(c) Branch Connection Welds

(1) Branch connections which abut the outside surface of the run pipe shall be contoured for groove welds which meet the WPS requirements [see Fig. 328.4.4 sketches (a) and (b)].

(2) Branch connections which are inserted through a run opening shall be inserted at least as far as the inside surface of the run pipe at all points [see Fig. 328.4.4 sketch (c)] and shall otherwise conform to para. 328.4.3(c)(1).

(3) Run openings for branch connections shall not deviate from the required contour more than the dimension *m* in Fig. 328.4.4. In no case shall deviations of the shape of the opening cause the root spacing tolerance limits in the WPS to be exceeded. Weld metal may be added and refinished if necessary for compliance.

(d) Spacing. The root opening of the joint shall be within the tolerance limits in the WPS.

328.5 Welding Requirements

328.5.1 General

(a) Welds, including addition of weld metal for alignment [paras. 328.4.2(b)(4) and 328.4.3(c)(3)], shall be

Copyright ASME International
Provided by IHS under license with ASME
No reproduction or networking permitted without license from IHS
Not for Resale

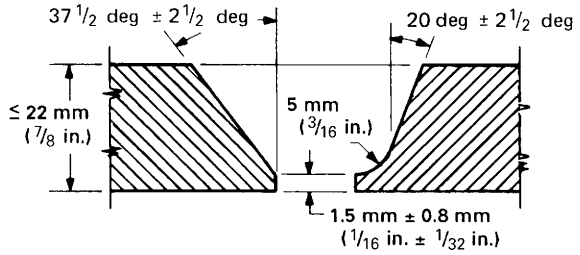

(a) Wall Thickness 6 mm to 22 mm, Inclusive (3/16 in. to 7/8 in.)

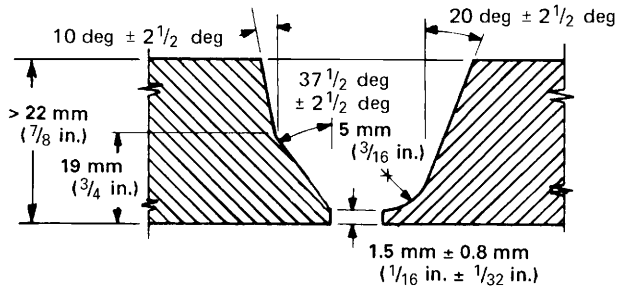

(b) Wall Thickness Over 22 mm (7/8 in.)

Fig. 328.4.2 Typical Butt Weld End Preparation

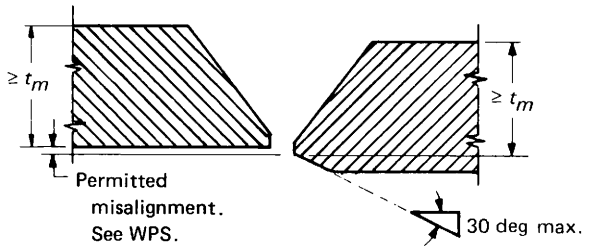

(a) Thicker Pipe Taper-Bored to Align

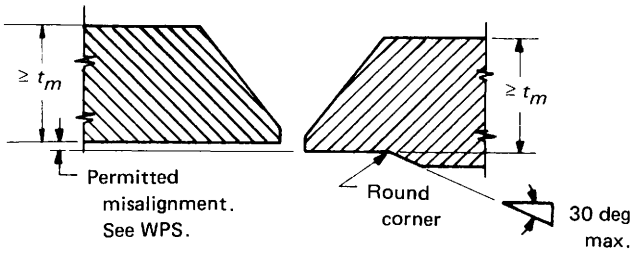

(b) Thicker Pipe Bored for Alignment

Fig. 328.4.3 Trimming and Permitted Misalignment

made in accordance with a qualified procedure and by qualified welders or welding operators.

(b) Each qualified welder and welding operator shall be assigned an identification symbol. Unless otherwise specified in the engineering design, each pressure containing weld or adjacent area shall be marked with the identification symbol of the welder or welding operator. In lieu of marking the weld, appropriate records shall be filed.

(c) Tack welds at the root of the joint shall be made with filler metal equivalent to that used in the root pass. Tack welds shall be made by a qualified welder or welding operator. Tack welds shall be fused with the root pass weld, except that those which have cracked shall be removed. Bridge tacks (above the weld) shall be removed.

(d) Peening is prohibited on the root pass and final pass of a weld.

(e) No welding shall be done if there is impingement on the weld area of rain, snow, sleet, or excessive wind, or if the weld area is frosted or wet.

(f) Welding End Valves. The welding sequence and procedure and any heat treatment for a welding end valve shall be such as to preserve the seat tightness of the valve.

328.5.2 Fillet and Socket Welds. Fillet welds (including socket welds) may vary from convex to concave. The size of a fillet weld is determined as shown in Fig. 328.5.2A.

(a) Typical weld details for slip-on and socket welding flanges are shown in Fig. 328.5.2B; minimum welding dimensions for other socket welding components are shown in Fig. 328.5.2C or MSS SP-119.

(b) If slip-on flanges are single welded, the weld shall be at the hub.

328.5.3 Seal Welds. Seal welding shall be done by a qualified welder. Seal welds shall cover all exposed threads.

328.5.4 Welded Branch Connections

(a) Figures 328.5.4A through 328.5.4E show acceptable details of branch connections with and without added reinforcement, in which the branch pipe is connected directly to the run pipe. The illustrations are typical and are not intended to exclude acceptable types of construction not shown.

(b) Figure 328.5.4D shows basic types of weld attachments used in the fabrication of branch connections. The location and minimum size of attachment welds shall conform to the requirements herein. Welds shall be calculated in accordance with para. 304.3.3 but shall be not less than the sizes shown in Fig. 328.5.4D.

(c) The nomenclature and symbols used herein and in Fig. 328.5.4D are:

Copyright ASME International
Provided by IHS under license with ASME
No reproduction or networking permitted without license from IHS
Not for Resale

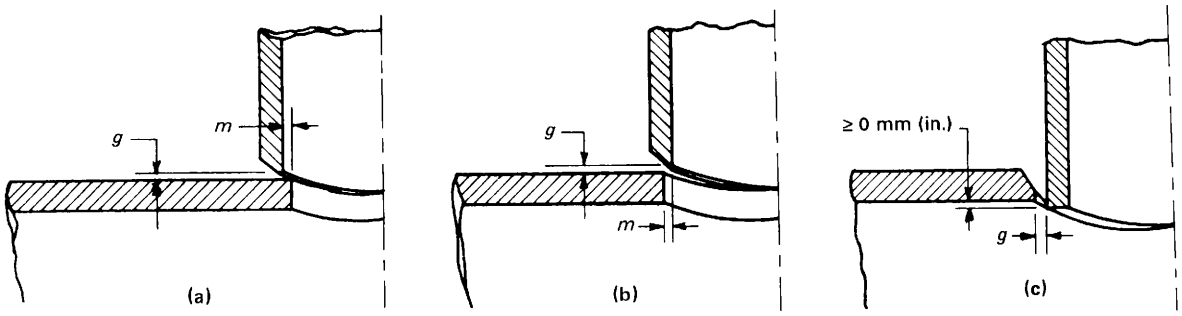

g = root gap per welding specification
m = the lesser of 3.2 mm ($^1/_8$ in.) or 0.5 $\overline{T}_b$

Fig. 328.4.4 Preparation for Branch Connections

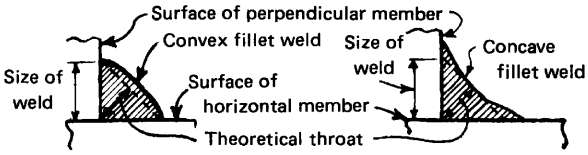

Equal Leg Fillet Weld

GENERAL NOTE: The size of an equal leg fillet weld is the leg length of the largest inscribed isosceles right triangle (theoretical throat = 0.707 × size).

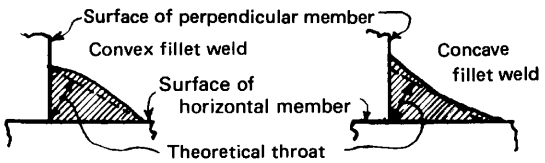

Unequal Leg Fillet Weld

GENERAL NOTE: The size of unequal leg fillet weld is the leg lengths of the largest right triangle which can be inscribed within the weld cross section [e.g., 13 mm × 19 mm ($^1/_2$ in. × $^3/_4$ in.)].

Fig. 328.5.2A Fillet Weld Size

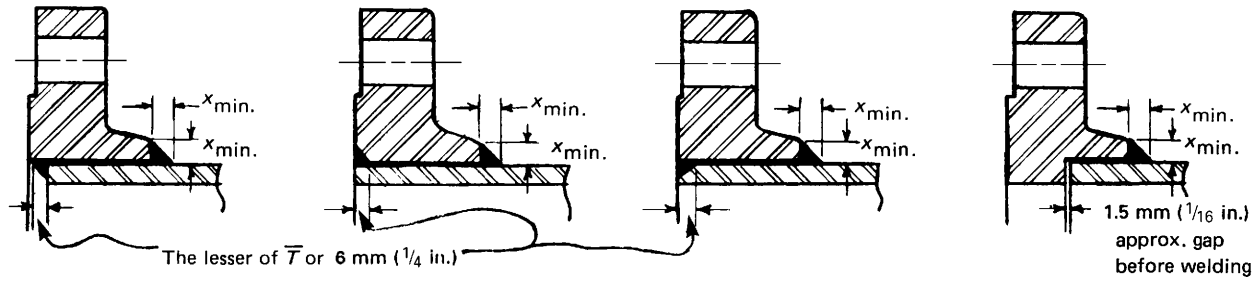

(1) Front and Back Welds **(2) Face and Back Welds** **(3) Socket Welding Flange**

$X_{min.}$ = the lesser of $1.4\overline{T}$ or the thickness of the hub

Fig. 328.5.2B Typical Details for Double-Welded Slip-On and Socket Welding Flange Attachment Welds

$\overline{T}_b$ = nominal thickness of branch
$\overline{T}_h$ = nominal thickness of header
$\overline{T}_r$ = nominal thickness of reinforcing pad or saddle
t_c = lesser of $0.7\overline{T}_b$ or 6 mm ($^1/_4$ in.)
$t_{min.}$ = lesser of $\overline{T}_b$ or $\overline{T}_r$

(d) Branch connections, including branch connection fittings (see paras. 300.2 and 304.3.2), which abut the outside of the run or which are inserted in an opening in the run shall be attached by fully penetrated groove welds. The welds shall be finished with cover fillet welds having a throat dimension not less than t_c. See Fig. 328.5.4D sketches (1) and (2).

(e) A reinforcing pad or saddle shall be attached to the branch pipe by either

Copyright ASME International
Provided by IHS under license with ASME
No reproduction or networking permitted without license from IHS
Not for Resale

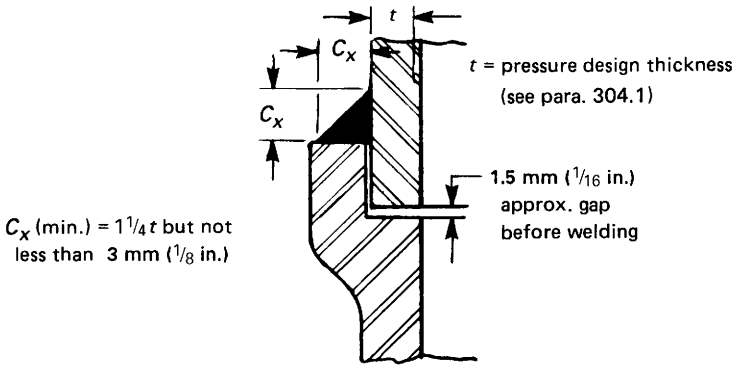

Fig. 328.5.2C Minimum Welding Dimensions for Socket Welding Components Other Than Flanges

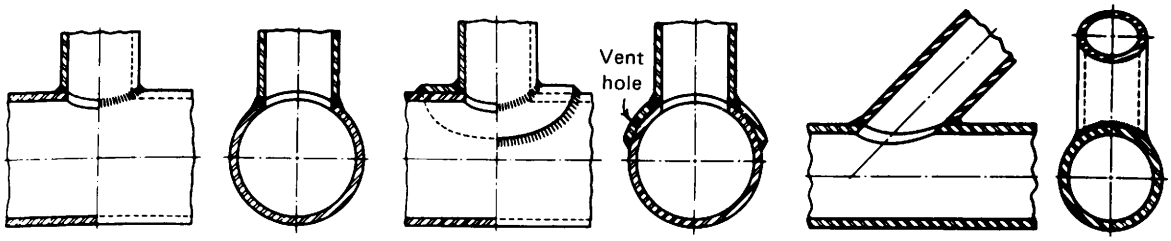

Figs. 328.5.4A, B, C Typical Welded Branch Connections

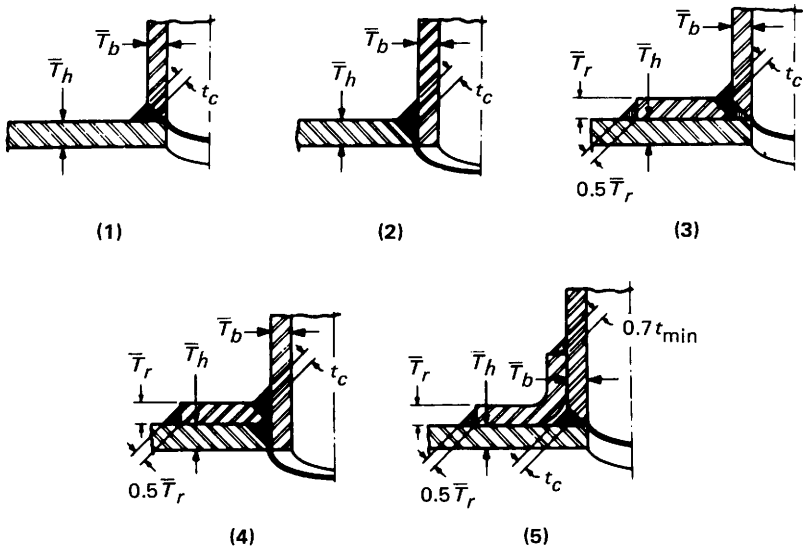

GENERAL NOTE: These sketches show minimum acceptable welds. Welds may be larger than those shown here.

Fig. 328.5.4D Acceptable Details for Branch Attachment Welds

Copyright ASME International
Provided by IHS under license with ASME
No reproduction or networking permitted without license from IHS
Not for Resale

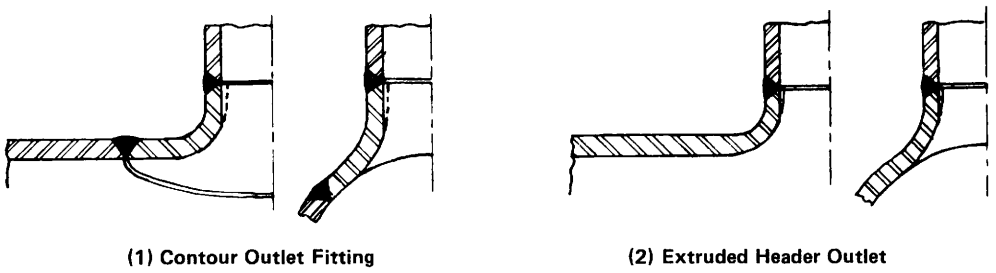

Fig. 328.5.4E Acceptable Details for Branch Attachment Suitable for 100% Radiography

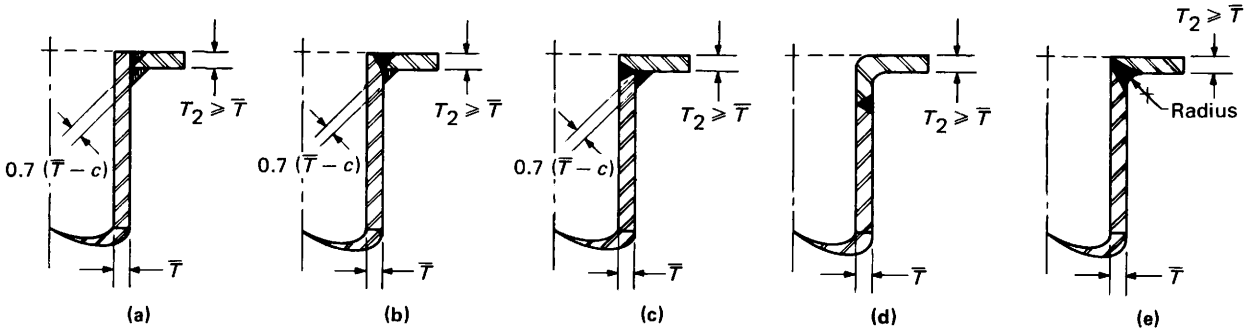

GENERAL NOTE: Laps shall be machined (front and back) or trued after welding. Plate flanges per para. 304.5 or lap joint flanges per ASME B16.5 may be used. Welds may be machined to radius, as in sketch (e), if necessary to match ASME B16.5 lap joint flanges.

Fig. 328.5.5 Typical Fabricated Laps

(1) a fully penetrated groove weld finished with a cover fillet weld having a throat dimension not less than t_c, or

(2) a fillet weld having a throat dimension not less than $0.7t_{\min.}$. See Fig. 328.5.4D sketch (5)

(f) The outer edge of a reinforcing pad or saddle shall be attached to the run pipe by a fillet weld having a throat dimension not less than $0.5\overline{T}_r$. See Fig. 328.5.4D sketches (3), (4), and (5).

(g) Reinforcing pads and saddles shall have a good fit with the parts to which they are attached. A vent hole shall be provided at the side (not at the crotch) of any pad or saddle to reveal leakage in the weld between branch and run and to allow venting during welding and heat treatment. A pad or saddle may be made in more than one piece if joints between pieces have strength equivalent to pad or saddle parent metal, and if each piece has a vent hole.

(h) Examination and any necessary repairs of the completed weld between branch and run shall be made before adding a pad or saddle.

328.5.5 Fabricated Laps. Figure 328.5.5 shows typical fabricated laps. Fabrication shall be in accordance with the applicable requirements of para. 328.5.4.

328.5.6 Welding for Severe Cyclic Conditions. A welding procedure shall be employed which provides a smooth, regular, fully penetrated inner surface.

328.6 Weld Repair

A weld defect to be repaired shall be removed to sound metal. Repair welds shall be made using a welding procedure qualified in accordance with para. 328.2.1, recognizing that the cavity to be repaired may differ in contour and dimensions from the original joint. Repair welds shall be made by welders or welding operators qualified in accordance with para. 328.2.1. Preheating and heat treatment shall be as required for the original welding. See also para. 341.3.3.

330 PREHEATING

330.1 General

Preheating is used, along with heat treatment, to minimize the detrimental effects of high temperature and severe thermal gradients inherent in welding. The necessity for preheating and the temperature to be used shall be specified in the engineering design and demonstrated

Copyright ASME International
Provided by IHS under license with ASME
No reproduction or networking permitted without license from IHS
Not for Resale

by procedure qualification. The requirements and recommendations herein apply to all types of welding including tack welds, repair welds, and seal welds of threaded joints.

330.1.1 Requirements and Recommendations. Required and recommended minimum preheat temperatures for materials of various P-Numbers are given in Table 330.1.1. If the ambient temperature is below 0°C (32°F), the recommendations in Table 330.1.1 become requirements. The thickness intended in Table 330.1.1 is that of the thicker component measured at the joint.

330.1.2 Unlisted Materials. Preheat requirements for an unlisted material shall be specified in the WPS.

330.1.3 Temperature Verification

(a) Preheat temperature shall be checked by use of temperature indicating crayons, thermocouple pyrometers, or other suitable means to ensure that the temperature specified in the WPS is obtained prior to and maintained during welding.

(b) Thermocouples may be temporarily attached directly to pressure containing parts using the capacitor discharge method of welding without welding procedure and performance qualifications. After thermocouples are removed, the areas shall be visually examined for evidence of defects to be repaired.

330.1.4 Preheat Zone. The preheat zone shall extend at least 25 mm (1 in.) beyond each edge of the weld.

330.2 Specific Requirements

330.2.3 Dissimilar Materials. When materials having different preheat requirements are welded together, it is recommended that the higher temperature shown in Table 330.1.1 be used.

330.2.4 Interrupted Welding. If welding is interrupted, the rate of cooling shall be controlled or other means shall be used to prevent detrimental effects in the piping. The preheat specified in the WPS shall be applied before welding is resumed.

331 HEAT TREATMENT

Heat treatment is used to avert or relieve the detrimental effects of high temperature and severe temperature gradients inherent in welding, and to relieve residual stresses created by bending and forming. Provisions in para. 331 are basic practices which are suitable for most welding, bending, and forming operations, but not necessarily appropriate for all service conditions.

331.1 General

331.1.1 Heat Treatment Requirements

(a) Heat treatment shall be in accordance with the material groupings and thickness ranges in Table 331.1.1 except as provided in paras. 331.2.1 and 331.2.2.

(b) Heat treatment to be used after production welding shall be specified in the WPS and shall be used in qualifying the welding procedure.

(c) The engineering design shall specify the examination and/or other production quality control (not less than the requirements of this Code) to ensure that the final welds are of adequate quality.

(d) Heat treatment for bending and forming shall be in accordance with para. 332.4.

331.1.3 Governing Thickness. When components are joined by welding, the thickness to be used in applying the heat treatment provisions of Table 331.1.1 shall be that of the thicker component measured at the joint, except as follows.

(a) In the case of branch connections, metal (other than weld metal) added as reinforcement, whether an integral part of a branch fitting or attached as a reinforcing pad or saddle, shall not be considered in determining heat treatment requirements. Heat treatment is required, however, when the thickness through the weld in any plane through the branch is greater than twice the minimum material thickness requiring heat treatment, even though the thickness of the components at the joint is less than the minimum thickness. Thickness through the weld for the details shown in Fig. 328.5.4D shall be computed using the following formulas:

$$\text{sketch (1)} = \overline{T}_b + t_c$$

$$\text{sketch (2)} = \overline{T}_h + t_c$$

$$\text{sketch (3)} = \text{greater of } \overline{T}_b + t_c \text{ or } \overline{T}_r + t_c$$

$$\text{sketch (4)} = \overline{T}_h + \overline{T}_r + t_c$$

$$\text{sketch (5)} = \overline{T}_b + t_c$$

(b) In the case of fillet welds at slip-on and socket welding flanges and piping connections DN 50 (NPS 2) and smaller, for seal welding of threaded joints in piping DN 50 and smaller, and for attachment of external nonpressure parts such as lugs or other pipe supporting elements in all pipe sizes, heat treatment is required when the thickness through the weld in any plane is more than twice the minimum material thickness requiring heat treatment (even though the thickness of the components at the joint is less than that minimum thickness) except as follows:

(1) not required for P-No. 1 materials when weld throat thickness is 16 mm ($\frac{5}{8}$ in.) or less, regardless of base metal thickness.

(2) not required for P-No. 3, 4, 5, or 10A materials when weld throat thickness is 13 mm ($\frac{1}{2}$ in.) or less, regardless of base metal thickness, provided that not less than the recommended preheat is applied, and the

Copyright ASME International
Provided by IHS under license with ASME
No reproduction or networking permitted without license from IHS
Not for Resale

Table 330.1.1 Preheat Temperatures

Base Metal P-No. or S-No. [Note (1)]	Weld Metal Analysis A-No. [Note (2)]	Base Metal Group	Nominal Wall Thickness		Specified Min. Tensile Strength, Base Metal		Min. Temperature			
							Required		Recommended	
			mm	in.	MPa	ksi	°C	°F	°C	°F
1	1	Carbon steel	< 25	< 1	≤ 490	≤ 71	...	...	10	50
			≥ 25	≥ 1	All	All	...	...	79	175
			All	All	> 490	> 71	...	...	79	175
3	2, 11	Alloy steels, Cr ≤ ½%	< 13	< ½	≤ 490	≤ 71	...	...	10	50
			≥ 13	≥ ½	All	All	...	...	79	175
			All	All	> 490	> 71	...	...	79	175
4	3	Alloy steels, ½% < Cr ≤ 2%	All	All	All	All	149	300	...	...
5A, 5B, 5C	4, 5	Alloy steels, 2¼% ≤ Cr ≤ 10%	All	All	All	All	177	350	...	...
6	6	High alloy steels martensitic	All	All	All	All	...	...	149[4]	300[4]
7	7	High alloy steels ferritic	All	All	All	All	...	...	10	50
8	8, 9	High alloy steels austenitic	All	All	All	All	...	...	10	50
9A, 9B	10	Nickel alloy steels	All	All	All	All	...	...	93	200
10	...	Cr–Cu steel	All	All	All	All	149–204	300–400	...	...
10I	...	27Cr steel	All	All	All	All	149[3]	300[3]	...	...
11A SG 1	...	8Ni, 9Ni steel	All	All	All	All	...	...	10	50
11A SG 2	...	5Ni steel	All	All	All	All	10	50	...	...
21–52	...	...	All	All	All	All	...	...	10	50

NOTES:
(1) P-Number or S-Number from BPV Code, Section IX, QW/QB-422.
(2) A-Number from Section IX, QW-442.
(3) Maintain interpass temperature between 177°C–232°C (350°F–450°F).
(4) Maximum interpass temperature 316°C (600°F).

Copyright ASME International
Provided by IHS under license with ASME
No reproduction or networking permitted without license from IHS
Not for Resale

Copyright ASME International
Provided by IHS under license with ASME
No reproduction or networking permitted without license from IHS

Table 331.1.1 Requirements for Heat Treatment

Base Metal P-No. or S-No. [Note (1)]	Weld Metal Analysis A-Number [Note (2)]	Base Metal Group	Nominal Wall Thickness		Specified Min. Tensile Strength, Base Metal		Metal Temperature Range		Holding Time			Brinell Hardness, Max. [Note (4)]
									Nominal Wall [Note (3)]		Min. Time,	
			mm	in.	MPa	ksi	°C	°F	min/mm	hr/in.	hr	
1	1	Carbon steel	≤ 19	≤ 3/4	All	All	None	None	...	...	...	...
			> 19	> 3/4	All	All	593–649	1100–1200	2.4	1	1	...
3	2, 11	Alloy steels,	≤ 19	≤ 3/4	≤ 490	≤ 71	None	None	...	...	...	...
		Cr ≤ 1/2%	> 19	> 3/4	All	All	593–718	1100–1325	2.4	1	1	225
			All	All	> 490	> 71	593–718	1100–1325	2.4	1	1	225
4 [Note (5)]	3	Alloy steels,	≤ 13	≤ 1/2	≤ 490	≤ 71	None	None	...	...	...	...
		1/2% < Cr ≤ 2%	> 13	> 1/2	All	All	704–746	1300–1375	2.4	1	2	225
			All	All	> 490	> 71	704–746	1300–1375	2.4	1	2	225
5A, 5B, 5C [Note (5)]	4, 5	Alloy steels (2 1/4% ≤ Cr ≤ 10%)										
		≤ 3% Cr and ≤ 0.15% C	≤ 13	≤ 1/2	All	All	None	None	...	...	...	...
		≤ 3% Cr and ≤ 0.15% C	> 13	> 1/2	All	All	704–760	1300–1400	2.4	1	2	241
		> 3% Cr or > 0.15% C	All	All	All	All	704–760	1300–1400	2.4	1	2	241
6	6	High alloy steels martensitic	All	All	All	All	732–788	1350–1450	2.4	1	2	241
		A 240 Gr. 429	All	All	All	All	621–663	1150–1225	2.4	1	2	241
7	7	High alloy steels ferritic	All	All	All	All	None	None	...	...	...	...
8	8, 9	High alloy steels austenitic	All	All	All	All	None	None	...	...	...	...
9A, 9B	10	Nickel alloy steels	≤ 19	≤ 3/4	All	All	None	None	...	...	...	...
			> 19	> 3/4	All	All	593–635	1100–1175	1.2	1/2	1	...
10	...	Cr–Cu steel	All	All	All	All	760–816 [Note (6)]	1400–1500 [Note (6)]	1.2	1/2	1/2	...

Not for Resale

Copyright ASME International
Provided by IHS under license with ASME
No reproduction or networking permitted without license from IHS

Table 331.1.1 Requirements for Heat Treatment (Cont'd)

Base Metal P-No. or S-No. [Note (1)]	Weld Metal Analysis A-Number [Note (2)]	Base Metal Group	Nominal Wall Thickness		Specified Min. Tensile Strength, Base Metal		Metal Temperature Range		Holding Time			Brinell Hardness, Max. [Note (4)]
									Nominal Wall [Note (3)]		Min. Time, hr	
			mm	in.	MPa	ksi	°C	°F	min/mm	hr/in.		
10H	...	Duplex stainless steel	All	All	All	All	Note (7)	Note (7)	1.2	1/2	1/2	...
10I	...	27Cr steel	All	All	All	All	663–704 [Note (8)]	1225–1300 [Note (8)]	2.4	1	1	...
11A SG 1	...	8Ni, 9Ni steel	≤ 51	≤ 2	All	All	None	None	...	...	...	...
			> 51	> 2	All	All	552–585 [Note (9)]	1025–1085 [Note (9)]	2.4	1	1	...
11A SG 2	...	5Ni steel	> 51	> 2	All	All	552–585 [Note (9)]	1025–1085 [Note (9)]	2.4	1	1	...
62	...	Zr R60705	All	All	All	All	538–593 [Note (10)]	1000–1100 [Note (10)]	Note (10)	Note (10)	1	...

NOTES:

(1) P-Number or S-Number from BPV Code, Section IX, QW/QB-422.

(2) A-Number from Section IX, QW-442.

(3) For holding time in SI metric units, use min/mm (minutes per mm thickness). For U.S. units, use hr/in. thickness.

(4) See para. 331.1.7.

(5) See Appendix F, para. F331.1.

(6) Cool as rapidly as possible after the hold period.

(7) Postweld heat treatment is neither required nor prohibited, but any heat treatment applied shall be as required in the material specification.

(8) Cooling rate to 649°C (1200°F) shall be less than 56°C (100°F)/hr; thereafter, the cooling rate shall be fast enough to prevent embrittlement.

(9) Cooling rate shall be > 167°C (300°F)/hr to 316°C (600°F).

(10) Heat treat within 14 days after welding. Hold time shall be increased by 1/2 hr for each 25 mm (1 in.) over 25 mm thickness. Cool to 427°C (800°F) at a rate ≤ 278°C (500°F)/hr, per 25 mm (1 in.) nominal thickness, 278°C (500°F)/hr max. Cool in still air from 427°C (800°F).

Not for Resale

specified minimum tensile strength of the base metal is less than 490 MPa (71 ksi)

(3) not required for ferritic materials when welds are made with filler metal which does not air harden. Austenitic welding materials may be used for welds to ferritic materials when the effects of service conditions, such as differential thermal expansion due to elevated temperature, or corrosion, will not adversely affect the weldment.

331.1.4 Heating and Cooling. The heating method shall provide the required metal temperature, metal temperature uniformity, and temperature control, and may include an enclosed furnace, local flame heating, electric resistance, electric induction, or exothermic chemical reaction. The cooling method shall provide the required or desired cooling rate and may include cooling in a furnace, in air, by application of local heat or insulation, or by other suitable means.

331.1.6 Temperature Verification. Heat treatment temperature shall be checked by thermocouple pyrometers or other suitable methods to ensure that the WPS requirements are met. See para. 330.1.3(b) for attachment of thermocouples by the capacitor discharge method of welding.

331.1.7 Hardness Tests. Hardness tests of production welds and of hot bent and hot formed piping are intended to verify satisfactory heat treatment. The hardness limit applies to the weld and to the heat affected zone (HAZ) tested as close as practicable to the edge of the weld.

(a) Where a hardness limit is specified in Table 331.1.1, at least 10% of welds, hot bends, and hot formed components in each furnace heat treated batch and 100% of those locally heat treated shall be tested.

(b) When dissimilar metals are joined by welding, the hardness limits specified for the base and welding materials in Table 331.1.1 shall be met for each material.

331.2 Specific Requirements

Where warranted by experience or knowledge of service conditions, alternative methods of heat treatment or exceptions to the basic heat treatment provisions of para. 331.1 may be adopted as provided in paras. 331.2.1 and 331.2.2.

331.2.1 Alternative Heat Treatment. Normalizing, or normalizing and tempering, or annealing may be applied in lieu of the required heat treatment after welding, bending, or forming, provided that the mechanical properties of any affected weld and base metal meet specification requirements after such treatment and that the substitution is approved by the designer.

331.2.2 Exceptions to Basic Requirements. As indicated in para. 331, the basic practices therein may require modification to suit service conditions in some cases. In such cases, the designer may specify more stringent requirements in the engineering design, including heat treatment and hardness limitations for lesser thickness, or may specify less stringent heat treatment and hardness requirements, including none.

When provisions less stringent than those in para. 331 are specified, the designer must demonstrate to the owner's satisfaction the adequacy of those provisions by comparable service experience, considering service temperature and its effects, frequency and intensity of thermal cycling, flexibility stress levels, probability of brittle failure, and other pertinent factors. In addition, appropriate tests shall be conducted, including WPS qualification tests.

331.2.3 Dissimilar Materials

(a) Heat treatment of welded joints between dissimilar ferritic metals or between ferritic metals using dissimilar ferritic filler metal shall be at the higher of the temperature ranges in Table 331.1.1 for the materials in the joint.

(b) Heat treatment of welded joints including both ferritic and austenitic components and filler metals shall be as required for the ferritic material or materials unless otherwise specified in the engineering design.

331.2.4 Delayed Heat Treatment. If a weldment is allowed to cool prior to heat treatment, the rate of cooling shall be controlled or other means shall be used to prevent detrimental effects in the piping.

331.2.5 Partial Heat Treatment. When an entire piping assembly to be heat treated cannot be fitted into the furnace, it is permissible to heat treat in more than one heat, provided there is at least 300 mm (1 ft) overlap between successive heats, and that parts of the assembly outside the furnace are protected from harmful temperature gradients.

331.2.6 Local Heat Treatment. When heat treatment is applied locally, a circumferential band of the run pipe, and of the branch where applicable, shall be heated until the specified temperature range exists over the entire pipe section(s), gradually diminishing beyond a band which includes the weldment or the bent or formed section and at least 25 mm (1 in.) beyond the ends thereof.

332 BENDING AND FORMING

332.1 General

Pipe may be bent and components may be formed by any hot or cold method which is suitable for the material, the fluid service, and the severity of the bending or forming process. The finished surface shall be free of cracks and substantially free from buckling. Thickness after bending or forming shall be not less than that required by the design.

Copyright ASME International
Provided by IHS under license with ASME
No reproduction or networking permitted without license from IHS
Not for Resale

332.2 Bending

332.2.1 Bend Flattening. Flattening of a bend, the difference between maximum and minimum diameters at any cross section, shall not exceed 8% of nominal outside diameter for internal pressure and 3% for external pressure. Removal of metal shall not be used to achieve these requirements.

332.2.2 Bending Temperature

(a) Cold bending of ferritic materials shall be done at a temperature below the transformation range.

(b) Hot bending shall be done at a temperature above the transformation range and in any case within a temperature range consistent with the material and the intended service.

332.2.3 Corrugated and Other Bends. Dimensions and configuration shall conform to the design qualified in accordance with para. 306.2.2.

332.3 Forming

The temperature range for forming shall be consistent with material, intended service, and specified heat treatment.

332.4 Required Heat Treatment

Heat treatment shall be performed in accordance with para. 331.1.1 when required by the following.

332.4.1 Hot Bending and Forming. After hot bending and forming, heat treatment is required for P-Nos. 3, 4, 5, 6, and 10A materials in all thicknesses. Durations and temperatures shall be in accordance with para. 331.

332.4.2 Cold Bending and Forming. After cold bending and forming, heat treatment is required (for all thicknesses, and with temperature and duration as given in Table 331.1.1) when any of the following conditions exist:

(a) for P-Nos. 1 through 6 materials, where the maximum calculated fiber elongation after bending or forming exceeds 50% of specified basic minimum elongation (in the direction of severest forming) for the applicable specification, grade, and thickness. This requirement may be waived if it can be demonstrated that the selection of pipe and the choice of bending or forming process provide assurance that, in the finished condition, the most severely strained material retains at least 10% elongation.

(b) for any material requiring impact testing, where the maximum calculated fiber elongation after bending or forming will exceed 5%.

(c) when specified in the engineering design.

333 BRAZING AND SOLDERING

333.1 Qualification

333.1.1 Brazing Qualification. The qualification of brazing procedures, brazers, and brazing operators shall be in accordance with the requirements of the BPV Code, Section IX, Part QB. For Category D Fluid Service at design temperature not over 93°C (200°F), such qualification is at the owner's option.

333.2 Brazing and Soldering Materials

333.2.1 Filler Metal. The brazing alloy or solder shall melt and flow freely within the specified or desired temperature range and, in conjunction with a suitable flux or controlled atmosphere, shall wet and adhere to the surfaces to be joined.

333.2.2 Flux. A flux that is fluid and chemically active at brazing or soldering temperature shall be used when necessary to eliminate oxidation of the filler metal and the surfaces to be joined, and to promote free flow of brazing alloy or solder.

333.3 Preparation

333.3.1 Surface Preparation. The surfaces to be brazed or soldered shall be clean and free from grease, oxides, paint, scale, and dirt of any kind. A suitable chemical or mechanical cleaning method shall be used if necessary to provide a clean wettable surface.

333.3.2 Joint Clearance. The clearance between surfaces to be joined by soldering or brazing shall be no larger than necessary to allow complete capillary distribution of the filler metal.

333.4 Requirements

333.4.1 Soldering Procedure. Solderers shall follow the procedure in the Copper Tube Handbook of the Copper Development Association.

333.4.2 Heating. To minimize oxidation, the joint shall be brought to brazing or soldering temperature in as short a time as possible without localized underheating or overheating.

333.4.3 Flux Removal. Residual flux shall be removed if detrimental.

335 ASSEMBLY AND ERECTION

335.1 Alignment

(a) Piping Distortions. Any distortion of piping to bring it into alignment for joint assembly which introduces a detrimental strain in equipment or piping components is prohibited.

(b) Cold Spring. Before assembling any joints to be cold sprung, guides, supports, and anchors shall be examined for errors which might interfere with desired movement or lead to undesired movement. The gap or overlap of piping prior to assembly shall be checked against the drawing and corrected if necessary. Heating shall not be used to help in closing the gap because it defeats the purpose of cold springing.

Copyright ASME International
Provided by IHS under license with ASME
No reproduction or networking permitted without license from IHS
Not for Resale

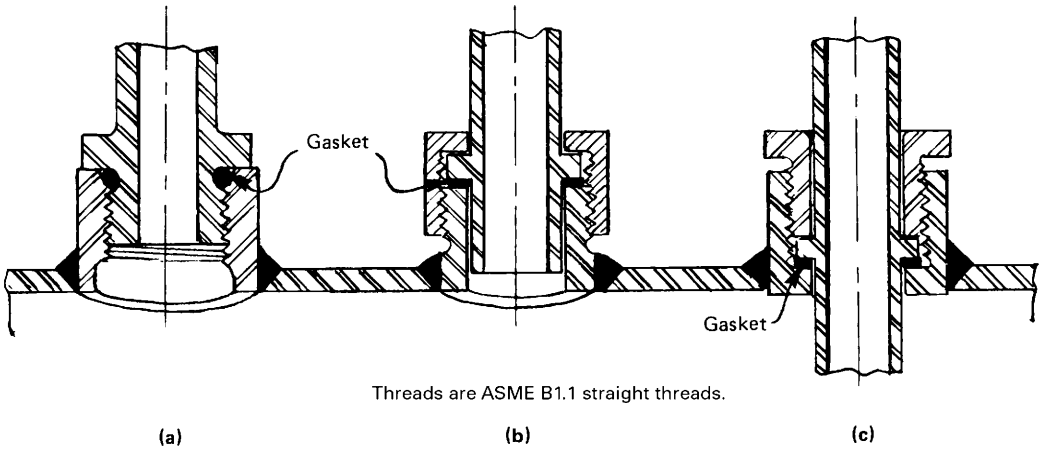

Fig. 335.3.3 Typical Threaded Joints Using Straight Threads

(c) Flanged Joints. Before bolting up, flange faces shall be aligned to the design plane within 1 mm in 200 mm ($\frac{1}{16}$ in./ft) measured across any diameter; flange bolt holes shall be aligned within 3 mm ($\frac{1}{8}$ in.) maximum offset.

335.2 Flanged Joints

335.2.1 Preparation for Assembly. Any damage to the gasket seating surface which would prevent gasket seating shall be repaired, or the flange shall be replaced.

335.2.2 Bolting Torque

(a) In assembling flanged joints, the gasket shall be uniformly compressed to the proper design loading.

(b) Special care shall be used in assembling flanged joints in which the flanges have widely differing mechanical properties. Tightening to a predetermined torque is recommended.

335.2.3 Bolt Length. Bolts should extend completely through their nuts. Any which fail to do so are considered acceptably engaged if the lack of complete engagement is not more than one thread.

335.2.4 Gaskets. No more than one gasket shall be used between contact faces in assembling a flanged joint.

335.3 Threaded Joints

335.3.1 Thread Compound or Lubricant. Any compound or lubricant used on threads shall be suitable for the service conditions and shall not react unfavorably with either the service fluid or the piping material.

335.3.2 Joints for Seal Welding. A threaded joint to be seal welded shall be made up without thread compound. A joint containing thread compound which leaks during leak testing may be seal welded in accordance with para. 328.5.3, provided all compound is removed from exposed threads.

335.3.3 Straight Threaded Joints. Typical joints using straight threads, with sealing at a surface other than the threads, are shown in Fig. 335.3.3 sketches (a), (b), and (c). Care shall be taken to avoid distorting the seat when incorporating such joints into piping assemblies by welding, brazing, or bonding.

335.4 Tubing Joints

335.4.1 Flared Tubing Joints. The sealing surface of the flare shall be examined for imperfections before assembly and any flare having imperfections shall be rejected.

335.4.2 Flareless and Compression Tubing Joints. Where the manufacturer's instructions call for a specified number of turns of the nut, these shall be counted from the point at which the nut becomes finger tight.

335.5 Caulked Joints

Caulked joints shall be installed and assembled in accordance with the manufacturer's instructions, as modified by the engineering design. Care shall be taken to ensure adequate engagement of joint members.

335.6 Expanded Joints and Special Joints

335.6.1 General. Expanded joints and special joints (as defined in para. 318) shall be installed and assembled in accordance with the manufacturer's instructions, as modified by the engineering design. Care shall be taken to ensure adequate engagement of joint members.

335.6.2 Packed Joints. Where a packed joint is used to absorb thermal expansion, proper clearance shall be provided at the bottom of the socket to permit this movement.

335.9 Cleaning of Piping

See Appendix F, para. F335.9.

Copyright ASME International
Provided by IHS under license with ASME
No reproduction or networking permitted without license from IHS
Not for Resale

Chapter VI
Inspection, Examination, and Testing

340 INSPECTION

340.1 General

This Code distinguishes between examination (see para. 341) and inspection. Inspection applies to functions performed for the owner by the owner's Inspector or the Inspector's delegates. References in this Code to the "Inspector" are to the owner's Inspector or the Inspector's delegates.

340.2 Responsibility for Inspection

It is the owner's responsibility, exercised through the owner's Inspector, to verify that all required examinations and testing have been completed and to inspect the piping to the extent necessary to be satisfied that it conforms to all applicable examination requirements of the Code and of the engineering design.

340.3 Rights of the Owner's Inspector

The owner's Inspector and the Inspector's delegates shall have access to any place where work concerned with the piping installation is being performed. This includes manufacture, fabrication, heat treatment, assembly, erection, examination, and testing of the piping. They shall have the right to audit any examination, to inspect the piping using any examination method specified by the engineering design, and to review all certifications and records necessary to satisfy the owner's responsibility stated in para. 340.2.

340.4 Qualifications of the Owner's Inspector

(a) The owner's Inspector shall be designated by the owner and shall be the owner, an employee of the owner, an employee of an engineering or scientific organization, or of a recognized insurance or inspection company acting as the owner's agent. The owner's Inspector shall not represent nor be an employee of the piping manufacturer, fabricator, or erector unless the owner is also the manufacturer, fabricator, or erector.

(b) The owner's Inspector shall have not less than 10 years experience in the design, fabrication, or inspection of industrial pressure piping. Each 20% of satisfactorily completed work toward an engineering degree recognized by the Accreditation Board for Engineering and Technology (Three Park Avenue, New York, NY 10016) shall be considered equivalent to 1 year of experience, up to 5 years total.

(c) In delegating performance of inspection, the owner's Inspector is responsible for determining that a person to whom an inspection function is delegated is qualified to perform that function.

341 EXAMINATION

341.1 General

Examination applies to quality control functions performed by the manufacturer (for components only), fabricator, or erector. Reference in this Code to an examiner is to a person who performs quality control examinations.

341.2 Responsibility for Examination

Inspection does not relieve the manufacturer, the fabricator, or the erector of the responsibility for:

(a) providing materials, components, and workmanship in accordance with the requirements of this Code and of the engineering design [see para. 300(b)(3)]

(b) performing all required examinations

(c) preparing suitable records of examinations and tests for the Inspector's use

341.3 Examination Requirements

341.3.1 General. Prior to initial operation each piping installation, including components and workmanship, shall be examined in accordance with the applicable requirements of para. 341. The type and extent of any additional examination required by the engineering design, and the acceptance criteria to be applied, shall be specified. Joints not included in examinations required by para. 341.4 or by the engineering design are accepted if they pass the leak test required by para. 345.

(a) For P-Nos. 3, 4, and 5 materials, examination shall be performed after completion of any heat treatment.

(b) For a welded branch connection the examination of and any necessary repairs to the pressure containing weld shall be completed before any reinforcing pad or saddle is added.

341.3.2 Acceptance Criteria. Acceptance criteria shall be as stated in the engineering design and shall at least meet the applicable requirements stated below, in para. 344.6.2 for ultrasonic examination of welds, and elsewhere in the Code.

Copyright ASME International
Provided by IHS under license with ASME
No reproduction or networking permitted without license from IHS
Not for Resale

(a) Table 341.3.2 states acceptance criteria (limits on imperfections) for welds. See Fig. 341.3.2 for typical weld imperfections.

(b) Acceptance criteria for castings are specified in para. 302.3.3.

341.3.3 Defective Components and Workmanship. An examined item with one or more defects (imperfections of a type or magnitude exceeding the acceptance criteria of this Code) shall be repaired or replaced; and the new work shall be reexamined by the same methods, to the same extent, and by the same acceptance criteria as required for the original work.

341.3.4 Progressive Sampling for Examination. When required spot or random examination reveals a defect:

(a) two additional samples of the same kind (if welded or bonded joints, by the same welder, bonder, or operator) shall be given the same type of examination

(b) if the items examined as required by (a) above are acceptable, the defective item shall be repaired or replaced and reexamined as specified in para. 341.3.3, and all items represented by these two additional samples shall be accepted, but

(c) if any of the items examined as required by (a) above reveals a defect, two further samples of the same kind shall be examined for each defective item found by that sampling

(d) if all the items examined as required by (c) above are acceptable, the defective item(s) shall be repaired or replaced and reexamined as specified in para. 341.3.3, and all items represented by the additional sampling shall be accepted, but

(e) if any of the items examined as required by (c) above reveals a defect, all items represented by the progressive sampling shall be either:

(1) repaired or replaced and reexamined as required, or

(2) fully examined and repaired or replaced as necessary, and reexamined as necessary to meet the requirements of this Code

341.4 Extent of Required Examination

341.4.1 Examination Normally Required. Piping in Normal Fluid Service shall be examined to the extent specified herein or to any greater extent specified in the engineering design. Acceptance criteria are as stated in para. 341.3.2 and in Table 341.3.2, for Normal Fluid Service unless otherwise specified.

(a) Visual Examination. At least the following shall be examined in accordance with para. 344.2:

(1) sufficient materials and components, selected at random, to satisfy the examiner that they conform to specifications and are free from defects.

(2) at least 5% of fabrication. For welds, each welder's and welding operator's work shall be represented.

(3) 100% of fabrication for longitudinal welds, except those in components made in accordance with a listed specification. See para 341.5.1(a) for examination of longitudinal welds required to have a joint factor E_j of 0.90.

(4) random examination of the assembly of threaded, bolted, and other joints to satisfy the examiner that they conform to the applicable requirements of para. 335. When pneumatic testing is to be performed, all threaded, bolted, and other mechanical joints shall be examined.

(5) random examination during erection of piping, including checking of alignment, supports, and cold spring.

(6) examination of erected piping for evidence of defects that would require repair or replacement, and for other evident deviations from the intent of the design.

(b) Other Examination

(1) Not less than 5% of circumferential butt and miter groove welds shall be examined fully by random radiography in accordance with para. 344.5 or by random ultrasonic examination in accordance with para. 344.6. The welds to be examined shall be selected to ensure that the work product of each welder or welding operator doing the production welding is included. They shall also be selected to maximize coverage of intersections with longitudinal joints. When a circumferential weld with an intersecting longitudinal weld(s) is examined, at least the adjacent 38 mm ($1\frac{1}{2}$ in.) of each intersecting weld shall be examined. In-process examination in accordance with para. 344.7 may be substituted for all or part of the radiographic or ultrasonic examination on a weld-for-weld basis if specified in the engineering design or specifically authorized by the Inspector.

(2) Not less than 5% of all brazed joints shall be examined by in-process examination in accordance with para. 344.7, the joints to be examined being selected to ensure that the work of each brazer making the production joints is included.

(c) Certifications and Records. The examiner shall be assured, by examination of certifications, records, and other evidence, that the materials and components are of the specified grades and that they have received required heat treatment, examination, and testing. The examiner shall provide the Inspector with a certification that all the quality control requirements of the Code and of the engineering design have been carried out.

341.4.2 Examination — Category D Fluid Service. Piping and piping elements for Category D Fluid Service as designated in the engineering design shall be visually examined in accordance with para. 344.2 to the extent necessary to satisfy the examiner that components, materials, and workmanship conform to the requirements of this Code and the engineering design. Acceptance criteria are as stated in para. 341.3.2 and in Table

Copyright ASME International
Provided by IHS under license with ASME
No reproduction or networking permitted without license from IHS Not for Resale

Copyright ASME International
Provided by IHS under license with ASME
No reproduction or networking permitted without license from IHS

(04)

Table 341.3.2 Acceptance Criteria for Welds and Examination Methods for Evaluating Weld Imperfections

Criteria (A to M) for Types of Welds and for Service Conditions [Note (1)]											Examination Methods			
Normal and Category M Fluid Service			Severe Cyclic Conditions			Category D Fluid Service								
Type of Weld			Type of Weld			Type of Weld								
Girth, Miter Groove & Branch Connection [Note (4)]	Longitudinal Groove [Note (2)]	Fillet [Note (3)]	Girth, Miter Groove & Branch Connection [Note (4)]	Longitudinal Groove [Note (2)]	Fillet [Note (3)]	Girth and Miter Groove	Longitudinal Groove [Note (2)]	Fillet [Note (3)]	Branch Connection [Note (4)]	Weld Imperfection	Visual	Radiography	Magnetic Particle	Liquid Penetrant
A	A	A	A	A	A	A	A	A	A	Crack	✓	✓	✓	✓
A	A	A	A	A	A	C	A	N/A	A	Lack of fusion	✓	✓	. . .	. . .
B	A	N/A	A	A	N/A	C	A	N/A	B	Incomplete penetration	✓	✓	. . .	. . .
E	E	N/A	D	D	N/A	N/A	N/A	N/A	N/A	Internal porosity	. . .	✓	. . .	. . .
G	G	N/A	F	F	N/A	N/A	N/A	N/A	N/A	Internal slag inclusion, tungsten inclusion, or elongated indication	. . .	✓	. . .	. . .
H	A	H	A	A	A	I	A	H	H	Undercutting	. . .	✓	. . .	. . .
A	A	A	A	A	A	A	A	A	A	Surface porosity or exposed slag inclusion [Note (5)]	✓	. . .	. . .	. . .
N/A	N/A	N/A	J	J	J	N/A	N/A	N/A	N/A	Surface finish	✓	. . .	. . .	. . .
K	K	N/A	K	K	N/A	K	K	N/A	K	Concave root surface (suck up)	✓	✓	. . .	. . .
L	L	L	L	L	L	M	M	M	M	Weld reinforcement or internal protrusion	✓	. . .	. . .	. . .

GENERAL NOTES:

(a) Weld imperfections are evaluated by one or more of the types of examination methods given, as specified in paras. 341.4.1, 341.4.2, 341.4.3, and M341.4, or by the engineering design.

(b) "N/A" indicates the Code does not establish acceptance criteria or does not require evaluation of this kind of imperfection for this type of weld.

(c) Check (✓) indicates examination method generally used for evaluating this kind of weld imperfection.

(d) Ellipsis (. . .) indicates examination method not generally used for evaluating this kind of weld imperfection.

Not for Resale

Copyright ASME International
Provided by IHS under license with ASME
No reproduction or networking permitted without license from IHS

(04)

Criterion Value Notes for Table 341.3.2

Symbol	Criterion Measure	Acceptable Value Limits [Note (6)]	
A	Extent of imperfection	Zero (no evident imperfection)	
B	Depth of incomplete penetration Cumulative length of incomplete penetration	≤ 1 mm ($^1/_{32}$ in.) and ≤ $0.2\overline{T}_w$ ≤ 38 mm (1.5 in.) in any 150 mm (6 in.) weld length	
C	Depth of lack of fusion and incomplete penetration Cumulative length of lack of fusion and incomplete penetration [Note (7)]	≤ $0.2\overline{T}_w$ ≤ 38 mm (1.5 in.) in any 150 mm (6 in.) weld length	
D	Size and distribution of internal porosity	See BPV Code, Section VIII, Division 1, Appendix 4	
E	Size and distribution of internal porosity	For $\overline{T}_w$ ≤ 6 mm ($^1/_4$ in.), limit is same as D For $\overline{T}_w$ > 6 mm ($^1/_4$ in.), limit is 1.5 × D	
F	Slag inclusion, tungsten inclusion, or elongated indication Individual length Individual width Cumulative length	 ≤ $\overline{T}_w/3$ ≤ 2.5 mm ($^3/_{32}$ in.) and ≤ $\overline{T}_w/3$ ≤ $\overline{T}_w$ in any $12\overline{T}_w$ weld length	
G	Slag inclusion, tungsten inclusion, or elongated indication Individual length Individual width Cumulative length	 ≤ $2\overline{T}_w$ ≤ 3 mm ($^1/_8$ in.) and ≤ $\overline{T}_w/2$ ≤ $4\overline{T}_w$ in any 150 mm (6 in.) weld length	
H	Depth of undercut	≤ 1 mm ($^1/_{32}$ in.) and ≤ $\overline{T}_w/4$	
I	Depth of undercut	≤ 1.5 mm ($^1/_{16}$ in.) and ≤ [$\overline{T}_w/4$ or 1 mm ($^1/_{32}$ in.)]	
J	Surface roughness	≤ 500 min. *Ra* per ASME B46.1	
K	Depth of root surface concavity	Total joint thickness, incl. weld reinf., ≥ $\overline{T}_w$	
L	Height of reinforcement or internal protrusion [Note (8)] in any plane through the weld shall be within limits of the applicable height value in the tabulation at right, except as provided in Note (9). Weld metal shall merge smoothly into the component surfaces.	For $\overline{T}_w$, mm (in.) ≤ 6 ($^1/_4$) > 6 ($^1/_4$), ≤ 13 ($^1/_2$) > 13 ($^1/_2$), ≤ 25 (1) > 25 (1)	Height, mm (in.) ≤ 1.5 ($^1/_{16}$) ≤ 3 ($^1/_8$) ≤ 4 ($^5/_{32}$) ≤ 5 ($^3/_{16}$)
M	Height of reinforcement or internal protrusion [Note (8)] as described in L. Note (9) does not apply.	Limit is twice the value applicable for L above	

Notes follow on next page

Not for Resale

Table 341.3.2 Acceptance Criteria for Welds and Examination Methods for Evaluating Weld Imperfections (Cont'd)

NOTES:
(1) Criteria given are for required examination. More stringent criteria may be specified in the engineering design. See also paras. 341.5 and 341.5.3.
(2) Longitudinal groove weld includes straight and spiral seam. Criteria are not intended to apply to welds made in accordance with a standard listed in Table A-1 or Table 326.1. Alternative Leak Test requires examination of these welds; see para. 345.9.
(3) Fillet weld includes socket and seal welds, and attachment welds for slip-on flanges, branch reinforcement, and supports.
(4) Branch connection weld includes pressure containing welds in branches and fabricated laps.
(5) These imperfections are evaluated only for welds ≤ 5 mm ($^3/_{16}$ in.) in nominal thickness.
(6) Where two limiting values are separated by "and," the lesser of the values determines acceptance. Where two sets of values are separated by "or," the larger value is acceptable. $\overline{T}_w$ is the nominal wall thickness of the thinner of two components joined by a butt weld.
(7) Tightly butted unfused root faces are unacceptable.
(8) For groove welds, height is the lesser of the measurements made from the surfaces of the adjacent components; both reinforcement and internal protrusion are permitted in a weld. For fillet welds, height is measured from the theoretical throat, Fig. 328.5.2A; internal protrusion does not apply.
(9) For welds in aluminum alloy only, internal protrusion shall not exceed the following values:
(a) for thickness ≤ 2 mm ($^5/_{64}$ in.): 1.5 mm ($^1/_{16}$ in.);
(b) for thickness > 2 mm and ≤ 6 mm ($^1/_4$ in.): 2.5 mm ($^3/_{32}$ in.).
For external reinforcement and for greater thicknesses, see the tabulation for Symbol L.

341.3.2, for Category D fluid service, unless otherwise specified.

341.4.3 Examination — Severe Cyclic Conditions. Piping to be used under severe cyclic conditions shall be examined to the extent specified herein or to any greater extent specified in the engineering design. Acceptance criteria are as stated in para. 341.3.2 and in Table 341.3.2, for severe cyclic conditions, unless otherwise specified.

(a) Visual Examination. The requirements of para. 341.4.1(a) apply with the following exceptions.

(1) All fabrication shall be examined.

(2) All threaded, bolted, and other joints shall be examined.

(3) All piping erection shall be examined to verify dimensions and alignment. Supports, guides, and points of cold spring shall be checked to ensure that movement of the piping under all conditions of startup, operation, and shutdown will be accommodated without undue binding or unanticipated constraint.

(b) Other Examination. All circumferential butt and miter groove welds and all fabricated branch connection welds comparable to those shown in Fig. 328.5.4E shall be examined by 100% radiography in accordance with para. 344.5, or (if specified in the engineering design) by 100% ultrasonic examination in accordance with para. 344.6. Socket welds and branch connection welds which are not radiographed shall be examined by magnetic particle or liquid penetrant methods in accordance with para. 344.3 or 344.4.

(c) In-process examination in accordance with para. 344.7, supplemented by appropriate nondestructive examination, may be substituted for the examination required in (b) above on a weld-for-weld basis if specified in the engineering design or specifically authorized by the Inspector.

(d) Certification and Records. The requirements of para. 341.4.1(c) apply.

341.5 Supplementary Examination

Any of the methods of examination described in para. 344 may be specified by the engineering design to supplement the examination required by para. 341.4. The extent of supplementary examination to be performed and any acceptance criteria that differ from those in para. 341.3.2 shall be specified in the engineering design.

341.5.1 Spot Radiography

(a) Longitudinal Welds. Spot radiography for longitudinal groove welds required to have a weld joint factor E_j of 0.90 requires examination by radiography in accordance with para. 344.5 of at least 300 mm (1 ft) in each 30 m (100 ft) of weld for each welder or welding operator. Acceptance criteria are those stated in Table 341.3.2 for radiography under Normal Fluid Service.

(b) Circumferential Butt Welds and Other Welds. It is recommended that the extent of examination be not less than one shot on one in each 20 welds for each welder or welding operator. Unless otherwise specified, acceptance criteria are as stated in Table 341.3.2 for radiography under Normal Fluid Service for the type of joint examined.

(c) Progressive Sampling for Examination. The provisions of para. 341.3.4 are applicable.

(d) Welds to Be Examined. The locations of welds and the points at which they are to be examined by spot

Copyright ASME International
Provided by IHS under license with ASME
No reproduction or networking permitted without license from IHS Not for Resale

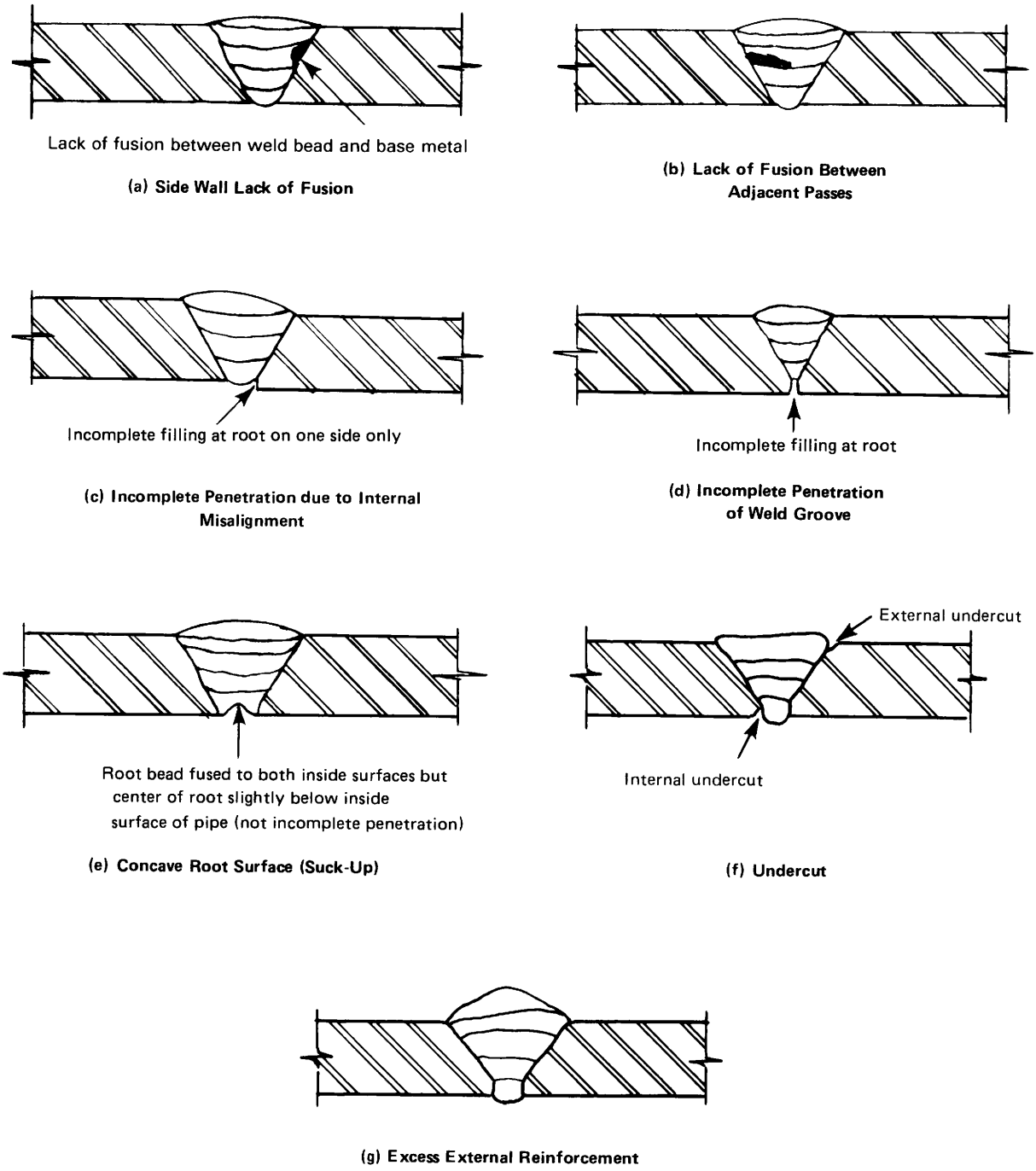

(a) Side Wall Lack of Fusion

(b) Lack of Fusion Between Adjacent Passes

(c) Incomplete Penetration due to Internal Misalignment

(d) Incomplete Penetration of Weld Groove

(e) Concave Root Surface (Suck-Up)

(f) Undercut

(g) Excess External Reinforcement

Fig. 341.3.2 Typical Weld Imperfections

Copyright ASME International
Provided by IHS under license with ASME
No reproduction or networking permitted without license from IHS
Not for Resale

radiography shall be selected or approved by the Inspector.

341.5.2 Hardness Tests. The extent of hardness testing required shall be in accordance with para. 331.1.7 except as otherwise specified in the engineering design.

341.5.3 Examinations to Resolve Uncertainty. Any method may be used to resolve doubtful indications. Acceptance criteria shall be those for the required examination.

342 EXAMINATION PERSONNEL

342.1 Personnel Qualification and Certification

Examiners shall have training and experience commensurate with the needs of the specified examinations.[1] The employer shall certify records of the examiners employed, showing dates and results of personnel qualifications, and shall maintain them and make them available to the Inspector.

342.2 Specific Requirement

For in-process examination, the examinations shall be performed by personnel other than those performing the production work.

343 EXAMINATION PROCEDURES

Any examination shall be performed in accordance with a written procedure that conforms to one of the methods specified in para. 344, including special methods (see para. 344.1.2). Procedures shall be written as required in the BPV Code, Section V, Article 1, T-150. The employer shall certify records of the examination procedures employed, showing dates and results of procedure qualifications, and shall maintain them and make them available to the Inspector.

344 TYPES OF EXAMINATION

344.1 General

344.1.1 Methods. Except as provided in para. 344.1.2, any examination required by this Code, by the engineering design, or by the Inspector shall be performed in accordance with one of the methods specified herein.

344.1.2 Special Methods. If a method not specified herein is to be used, it and its acceptance criteria shall be specified in the engineering design in enough detail to permit qualification of the necessary procedures and examiners.

[1] For this purpose, SNT-TC-1A, Recommended Practice for Nondestructive Testing Personnel Qualification and Certification, may be used as a guide.

344.1.3 Definitions. The following terms apply to any type of examination:

100% examination: complete examination of all of a specified kind of item in a designated lot of piping[2]

random examination:[3] complete examination of a percentage of a specified kind of item in a designated lot of piping[2]

spot examination:[3] a specified partial examination of each of a specified kind of item in a designated lot of piping,[2] e.g., of part of the length of all shop-fabricated welds in a lot of jacketed piping

random spot examination:[3] a specified partial examination of a percentage of a specified kind of item in a designated lot of piping[2]

344.2 Visual Examination

344.2.1 Definition. Visual examination is observation of the portion of components, joints, and other piping elements that are or can be exposed to view before, during, or after manufacture, fabrication, assembly, erection, examination, or testing. This examination includes verification of Code and engineering design requirements for materials, components, dimensions, joint preparation, alignment, welding, bonding, brazing, bolting, threading, or other joining method, supports, assembly, and erection.

344.2.2 Method. Visual examination shall be performed in accordance with the BPV Code, Section V, Article 9. Records of individual visual examinations are not required, except for those of in-process examination as specified in para. 344.7.

344.3 Magnetic Particle Examination

Examination of castings is covered in para. 302.3.3. Magnetic particle examination of welds and of components other than castings shall be performed in accordance with BPV Code, Section V, Article 7.

344.4 Liquid Penetrant Examination

Examination of castings is covered in para. 302.3.3. Liquid penetrant examination of welds and of components other than castings shall be performed in accordance with BPV Code, Section V, Article 6.

[2] A designated lot is that quantity of piping to be considered in applying the requirements for examination in this Code. The quantity or extent of a designated lot should be established by agreement between the contracting parties before the start of work. More than one kind of designated lot may be established for different kinds of piping work.

[3] Random or spot examination will not ensure a fabrication product of a prescribed quality level throughout. Items not examined in a lot of piping represented by such examination may contain defects which further examination could disclose. Specifically, if all radiographically disclosable weld defects must be eliminated from a lot of piping, 100% radiographic examination must be specified.

Copyright ASME International
Provided by IHS under license with ASME
No reproduction or networking permitted without license from IHS
Not for Resale

344.5 Radiographic Examination

344.5.1 Method. Radiography of castings is covered in para. 302.3.3. Radiography of welds and of components other than castings shall be performed in accordance with BPV Code, Section V, Article 2.

344.5.2 Extent of Radiography

(a) 100% Radiography. This applies only to girth and miter groove welds and to fabricated branch connection welds comparable to Fig. 328.5.4E, unless otherwise specified in the engineering design.

(b) Random Radiography. This applies only to girth and miter groove welds.

(c) Spot Radiography. This requires a single exposure radiograph in accordance with para. 344.5.1 at a point within a specified extent of welding. For girth, miter, and branch groove welds the minimum requirement is

(1) for sizes ≤ DN 65 (NPS 2½), a single elliptical exposure encompassing the entire weld circumference

(2) for sizes > DN 65, the lesser of 25% of the inside circumference or 152 mm (6 in.)

For longitudinal welds the minimum requirement is 152 mm (6 in.) of weld length.

344.6 Ultrasonic Examination

344.6.1 Method. Examination of castings is covered in para. 302.3.3; other product forms are not covered. Ultrasonic examination of welds shall be performed in accordance with BPV Code, Section V, Article 5, except that the alternative specified in (a) and (b) below is permitted for basic calibration blocks specified in T-542.2.1 and T-542.8.1.1.

(a) When the basic calibration blocks have not received heat treatment in accordance with T-542.1.1(c) and T-542.8.1.1, transfer methods shall be used to correlate the responses from the basic calibration block and the component. Transfer is accomplished by noting the difference between responses received from the same reference reflector in the basic calibration block and in the component and correcting for the difference.

(b) The reference reflector may be a V-notch (which must subsequently be removed), an angle beam search unit acting as a reflector, or any other reflector which will aid in accomplishing the transfer.

(c) When the transfer method is chosen as an alternative, it shall be used, at the minimum

(1) for sizes ≤ DN 50 (NPS 2), once in each 10 welded joints examined

(2) for sizes > DN 50 and ≤ DN 450 (NPS 18), once in each 1.5 m (5 ft) of welding examined

(3) for sizes > DN 450, once for each welded joint examined

(d) Each type of material and each size and wall thickness shall be considered separately in applying the transfer method. In addition, the transfer method shall be used at least twice on each type of weld joint.

(e) The reference level for monitoring discontinuities shall be modified to reflect the transfer correction when the transfer method is used.

344.6.2 Acceptance Criteria. A linear-type discontinuity is unacceptable if the amplitude of the indication exceeds the reference level and its length exceeds:

(a) 6 mm (¼ in.) for $\overline{T}_w \le 19$ mm (¾ in.)

(b) $\overline{T}_w/3$ for 19 mm < $\overline{T}_w \le 57$ mm (2¼ in.)

(c) 19 mm for $\overline{T}_w > 57$ mm

344.7 In-Process Examination

344.7.1 Definition. In-process examination comprises examination of the following, as applicable:

(a) joint preparation and cleanliness

(b) preheating

(c) fit-up, joint clearance, and internal alignment prior to joining

(d) variables specified by the joining procedure, including filler material

(1) (for welding) position and electrode

(2) (for brazing) position, flux, brazing temperature, proper wetting, and capillary action

(e) (for welding) condition of the root pass after cleaning — external and, where accessible, internal — aided by liquid penetrant or magnetic particle examination when specified in the engineering design

(f) (for welding) slag removal and weld condition between passes

(g) appearance of the finished joint

344.7.2 Method. The examination is visual, in accordance with para. 344.2, unless additional methods are specified in the engineering design.

345 TESTING

345.1 Required Leak Test

Prior to initial operation, and after completion of the applicable examinations required by para. 341, each piping system shall be tested to ensure tightness. The test shall be a hydrostatic leak test in accordance with para. 345.4 except as provided herein.

(a) At the owner's option, a piping system in Category D fluid service may be subjected to an initial service leak test in accordance with para. 345.7, in lieu of the hydrostatic leak test.

(b) Where the owner considers a hydrostatic leak test impracticable, either a pneumatic test in accordance with para. 345.5 or a combined hydrostatic-pneumatic test in accordance with para. 345.6 may be substituted, recognizing the hazard of energy stored in compressed gas.

(c) Where the owner considers both hydrostatic and pneumatic leak testing impracticable, the alternative specified in para. 345.9 may be used if both of the following conditions apply:

Copyright ASME International
Provided by IHS under license with ASME
No reproduction or networking permitted without license from IHS
Not for Resale

(1) a hydrostatic test would damage linings or internal insulation, or contaminate a process which would be hazardous, corrosive, or inoperative in the presence of moisture, or would present the danger of brittle fracture due to low metal temperature during the test; and

(2) a pneumatic test would present an undue hazard of possible release of energy stored in the system, or would present the danger of brittle fracture due to low metal temperature during the test.

345.2 General Requirements for Leak Tests

Requirements in para. 345.2 apply to more than one type of leak test.

345.2.1 Limitations on Pressure

(a) Stress Exceeding Yield Strength. If the test pressure would produce a nominal pressure stress or longitudinal stress in excess of yield strength at test temperature, the test pressure may be reduced to the maximum pressure that will not exceed the yield strength at test temperature. [See paras. 302.3.2(e) and (f).]

(b) Test Fluid Expansion. If a pressure test is to be maintained for a period of time and the test fluid in the system is subject to thermal expansion, precautions shall be taken to avoid excessive pressure.

(c) Preliminary Pneumatic Test. A preliminary test using air at no more than 170 kPa (25 psi) gage pressure may be made prior to hydrostatic testing to locate major leaks.

345.2.2 Other Test Requirements

(a) Examination for Leaks. A leak test shall be maintained for at least 10 min, and all joints and connections shall be examined for leaks.

(b) Heat Treatment. Leak tests shall be conducted after any heat treatment has been completed.

(c) Low Test Temperature. The possibility of brittle fracture shall be considered when conducting leak tests at metal temperatures near the ductile-brittle transition temperature.

345.2.3 Special Provisions for Testing

(a) Piping Subassemblies. Piping subassemblies may be tested either separately or as assembled piping.

(b) Flanged Joints. A flanged joint at which a blank is inserted to isolate other equipment during a test need not be tested.

(c) Closure Welds. The final weld connecting piping systems or components which have been successfully tested in accordance with para. 345 need not be leak tested provided the weld is examined in-process in accordance with para. 344.7 and passes with 100% radiographic examination in accordance with para. 344.5 or 100% ultrasonic examination in accordance with para. 344.6.

345.2.4 Externally Pressured Piping. Piping subject to external pressure shall be tested at an internal gage pressure 1.5 times the external differential pressure, but not less than 105 kPa (15 psi).

345.2.5 Jacketed Piping

(a) The internal line shall be leak tested on the basis of the internal or external design pressure, whichever is critical. This test must be performed before the jacket is completed if it is necessary to provide visual access to joints of the internal line as required by para. 345.3.1.

(b) The jacket shall be leak tested in accordance with para. 345.1 on the basis of the jacket design pressure unless otherwise specified in the engineering design.

345.2.6 Repairs or Additions After Leak Testing. If repairs or additions are made following the leak test, the affected piping shall be retested, except that for minor repairs or additions the owner may waive retest requirements when precautionary measures are taken to assure sound construction.

345.2.7 Test Records. Records shall be made of each piping system during the testing, including:

(a) date of test
(b) identification of piping system tested
(c) test fluid
(d) test pressure
(e) certification of results by examiner

These records need not be retained after completion of the test if a certification by the Inspector that the piping has satisfactorily passed pressure testing as required by this Code is retained.

345.3 Preparation for Leak Test

345.3.1 Joints Exposed. All joints, welds (including structural attachment welds to pressure-containing components), and bonds shall be left uninsulated and exposed for examination during leak testing, except that joints previously tested in accordance with this Code may be insulated or covered. All joints may be primed and painted prior to leak testing unless a sensitive leak test (para. 345.8) is required. (04)

345.3.2 Temporary Supports. Piping designed for vapor or gas shall be provided with additional temporary supports, if necessary, to support the weight of test liquid.

345.3.3 Piping With Expansion Joints

(a) An expansion joint that depends on external main anchors to restrain pressure end load shall be tested in place in the piping system.

(b) A self-restrained expansion joint previously shop-tested by the manufacturer [see Appendix X, para. X302.2.3(a)] may be excluded from the system under test, except that such expansion joints shall be installed in the system when a sensitive leak test in accordance with para. 345.8 is required.

Copyright ASME International
Provided by IHS under license with ASME
No reproduction or networking permitted without license from IHS
Not for Resale

(c) A piping system containing expansion joints shall be leak tested without temporary joint or anchor restraint at the lesser of

(1) 150 % of design pressure for a bellows-type expansion joint, or

(2) the system test pressure determined in accordance with para. 345

In no case shall a bellows-type expansion joint be subjected to a test pressure greater than the manufacturer's test pressure.

(d) When a system leak test at a pressure greater than the minimum test pressure specified in (c), or greater than 150% of the design pressure within the limitations of para. 345.2.1(a) is required, bellows-type expansion joints shall be removed from the piping system or temporary restraints shall be added to limit main anchor loads if necessary.

345.3.4 Limits of Tested Piping. Equipment which is not to be tested shall be either disconnected from the piping or isolated by blinds or other means during the test. A valve may be used provided the valve (including its closure mechanism) is suitable for the test pressure.

345.4 Hydrostatic Leak Test

(04) **345.4.1 Test Fluid.** The fluid shall be water unless there is the possibility of damage due to freezing or to adverse effects of water on the piping or the process (see para. F345.4.1). In that case another suitable nontoxic liquid may be used. If the liquid is flammable, its flash point shall be at least 49°C (120°F), and consideration shall be given to the test environment.

345.4.2 Test Pressure. Except as provided in para. 345.4.3, the hydrostatic test pressure at any point in a metallic piping system shall be as follows:

(a) not less than $1\frac{1}{2}$ times the design pressure;

(b) for design temperature above the test temperature, the minimum test pressure shall be calculated by Eq. (24), except that the value of S_T/S shall not exceed 6.5:

$$P_T = \frac{1.5\,PS_T}{S} \qquad (24)$$

where

P = internal design gage pressure
P_T = minimum test gage pressure
S = stress value at design temperature (see Table A-1)
S_T = stress value at test temperature

(c) if the test pressure as defined above would produce a nominal pressure stress or longitudinal stress in excess of the yield strength at test temperature, the test pressure may be reduced to the maximum pressure that will not exceed the yield strength at test temperature. [See paras. 302.3.2(e) and (f).] For metallic bellows expansion joints, see Appendix X, para. X302.2.3(a).

345.4.3 Hydrostatic Test of Piping With Vessels as a System [4]

(a) Where the test pressure of piping attached to a vessel is the same as or less than the test pressure for the vessel, the piping may be tested with the vessel at the piping test pressure.

(b) Where the test pressure of the piping exceeds the vessel test pressure, and it is not considered practicable to isolate the piping from the vessel, the piping and the vessel may be tested together at the vessel test pressure, provided the owner approves and the vessel test pressure is not less than 77% of the piping test pressure calculated in accordance with para. 345.4.2(b).

345.5 Pneumatic Leak Test

345.5.1 Precautions. Pneumatic testing involves the hazard of released energy stored in compressed gas. Particular care must therefore be taken to minimize the chance of brittle failure during a pneumatic leak test. Test temperature is important in this regard and must be considered when the designer chooses the material of construction. See para. 345.2.2(c) and Appendix F, para. F323.4.

345.5.2 Pressure Relief Device. A pressure relief device shall be provided, having a set pressure not higher than the test pressure plus the lesser of 345 kPa (50 psi) or 10% of the test pressure.

345.5.3 Test Fluid. The gas used as test fluid, if not air, shall be nonflammable and nontoxic.

345.5.4 Test Pressure. The test pressure shall be 110% of design pressure.

345.5.5 Procedure. The pressure shall be gradually increased until a gage pressure which is the lesser of one-half the test pressure or 170 kPa (25 psi) is attained, at which time a preliminary check shall be made, including examination of joints in accordance with para. 341.4.1(a). Thereafter, the pressure shall be gradually increased in steps until the test pressure is reached, holding the pressure at each step long enough to equalize piping strains. The pressure shall then be reduced to the design pressure before examining for leakage in accordance with para. 345.2.2(a).

345.6 Hydrostatic-Pneumatic Leak Test

If a combination hydrostatic-pneumatic leak test is used, the requirements of para. 345.5 shall be met, and the pressure in the liquid filled part of the piping shall not exceed the limits stated in para. 345.4.2.

345.7 Initial Service Leak Test

This test is applicable only to piping in Category D Fluid Service, at the owner's option. See para. 345.1(a).

[4] The provisions of para. 345.4.3 do not affect the pressure test requirements of any applicable vessel code.

Copyright ASME International
Provided by IHS under license with ASME
No reproduction or networking permitted without license from IHS
Not for Resale

345.7.1 Test Fluid. The test fluid is the service fluid.

345.7.2 Procedure. During or prior to initial operation, the pressure shall be gradually increased in steps until the operating pressure is reached, holding the pressure at each step long enough to equalize piping strains. A preliminary check shall be made as described in para. 345.5.5 if the service fluid is a gas or vapor.

345.7.3 Examination for Leaks. In lieu of para. 345.2.2(a), it is permissible to omit examination for leakage of any joints and connections previously tested in accordance with this Code.

345.8 Sensitive Leak Test

The test shall be in accordance with the Gas and Bubble Test method specified in the BPV Code, Section V, Article 10, or by another method demonstrated to have equal sensitivity. Sensitivity of the test shall be not less than 10^{-3} atm·ml/sec under test conditions.

(a) The test pressure shall be at least the lesser of 105 kPa (15 psi) gage or 25% of the design pressure.

(b) The pressure shall be gradually increased until a gage pressure the lesser of one-half the test pressure or 170 kPa (25 psi) is attained, at which time a preliminary check shall be made. Then the pressure shall be gradually increased in steps until the test pressure is reached, the pressure being held long enough at each step to equalize piping strains.

345.9 Alternative Leak Test

The following procedures and leak test method may be used only under the conditions stated in para. 345.1(c).

345.9.1 Examination of Welds. Welds, including those used in the manufacture of welded pipe and fittings, which have not been subjected to hydrostatic or pneumatic leak tests in accordance with this Code, shall be examined as follows.

(a) Circumferential, longitudinal, and spiral groove welds shall be 100% radiographed in accordance with para. 344.5 or 100% ultrasonically examined in accordance with para. 344.6.

(b) All welds, including structural attachment welds, not covered in (a) above, shall be examined using the liquid penetrant method (para. 344.4) or, for magnetic materials, the magnetic particle method (para. 344.3).

345.9.2 Flexibility Analysis. A flexibility analysis of the piping system shall have been made in accordance with the requirements of para. 319.4.2 (b), if applicable, or (c) and (d).

345.9.3 Test Method. The system shall be subjected to a sensitive leak test in accordance with para. 345.8.

346 RECORDS

346.2 Responsibility

It is the responsibility of the piping designer, the manufacturer, the fabricator, and the erector, as applicable, to prepare the records required by this Code and by the engineering design.

346.3 Retention of Records

Unless otherwise specified by the engineering design, the following records shall be retained for at least 5 years after the record is generated for the project:

(a) examination procedures

(b) examination personnel qualifications

Copyright ASME International
Provided by IHS under license with ASME
No reproduction or networking permitted without license from IHS
Not for Resale

Chapter VII
Nonmetallic Piping and Piping Lined With Nonmetals

A300 GENERAL STATEMENTS

(a) Chapter VII pertains to nonmetallic piping and to piping lined with nonmetals.

(b) The organization, content, and paragraph designations of this Chapter correspond to those of the first six Chapters (the base Code). The prefix A is used.

(c) Provisions and requirements of the base Code apply only as stated in this Chapter.

(d) Metallic piping which provides the pressure containment for a nonmetallic lining shall conform to the requirements of Chapters I through VI, and to those in Chapter VII not limited to nonmetals.

(e) This Chapter makes no provision for piping to be used under severe cyclic conditions.

(f) With the exceptions stated above, Chapter I applies in its entirety.

PART 1
CONDITIONS AND CRITERIA

A301 DESIGN CONDITIONS

Paragraph 301 applies in its entirety, with the exception of paras. 301.2 and 301.3. See below.

A301.2 Design Pressure

Paragraph 301.2 applies in its entirety, except that references to paras. A302.2.4 and A304 replace references to paras. 302.2.4 and 304, respectively.

A301.3 Design Temperature

Paragraph 301.3 applies with the following exceptions.

A301.3.1 Design Minimum Temperature. Paragraph 301.3.1 applies; but see para. A323.2.2, rather than para. 323.2.2.

A301.3.2 Uninsulated Components. The component design temperature shall be the fluid temperature, unless a higher temperature will result from solar radiation or other external heat sources.

A302 DESIGN CRITERIA

Paragraph A302 states pressure-temperature ratings, stress criteria, design allowances, and minimum design values, together with permissible variations of these factors as applied to the design of piping.

A302.1 General

The designer shall be satisfied as to the adequacy nonmetallic material and its manufacture, considering at least the following:

(a) tensile, compressive, flexural, and shear strength, and modulus of elasticity, at design temperature (long term and short term)
(b) creep rate at design conditions
(c) design stress and its basis
(d) ductility and plasticity
(e) impact and thermal shock properties
(f) temperature limits
(g) transition temperature: melting and vaporization
(h) porosity and permeability
(i) testing methods
(j) methods of making joints and their efficiency
(k) possibility of deterioration in service

A302.2 Pressure-Temperature Design Criteria

A302.2.1 Listed Components Having Established Ratings. Paragraph 302.2.1 applies, except that reference to Table A326.1 replaces reference to Table 326.1.

A302.2.2 Listed Components Not Having Specific Ratings. Nonmetallic piping components for which design stresses have been developed in accordance with para. A302.3, but which do not have specific pressure-temperature ratings, shall be rated by rules for pressure design in para. A304, within the range of temperatures for which stresses are shown in Appendix B, modified as applicable by other rules of this Code.

Piping components which do not have allowable stresses or pressure-temperature ratings shall be qualified for pressure design as required by para. A304.7.2.

A302.2.3 Unlisted Components. Paragraph 302.2.3 applies, except that references to Table A326.1 and paras. A304 and A304.7.2 replace references to Table 326.1 and paras. 304 and 304.7.2, respectively.

A302.2.4 Allowances for Pressure and Temperature Variations

(a) Nonmetallic Piping. Allowances for variations of pressure or temperature, or both, above design conditions are not permitted. The most severe conditions of coincident pressure and temperature shall be used to

Copyright ASME International
Provided by IHS under license with ASME
No reproduction or networking permitted without license from IHS
Not for Resale

determine the design conditions for a piping system. See paras. 301.2 and 301.3.

(b) Metallic Piping With Nonmetallic Lining. Allowances for pressure and temperature variations provided in para. 302.2.4 are permitted only if the suitability of the lining material for the increased conditions is established through prior successful service experience or tests under comparable conditions.

A302.2.5 Rating at Junction of Different Services. When two services that operate at different pressure-temperature conditions are connected, the valve segregating the two services shall be rated for the more severe service condition.

A302.3 Allowable Stresses and Other Design Limits for Nonmetals

A302.3.1 General

(a) Table B-1 contains hydrostatic design stresses (HDS). Tables B-2 and B-3 are listings of specifications which meet the criteria of paras. A302.3.2(b) and (c), respectively. Tables B-4 and B-5 contain allowable pressures. These HDS values, allowable stress criteria, and pressures shall be used in accordance with the Notes to Appendix B, and may be used in design calculations (where the allowable stress S means the appropriate design stress) except as modified by other provisions of this Code. Use of hydrostatic design stresses for calculations other than pressure design has not been verified. The bases for determining allowable stresses and pressures are outlined in para. A302.3.2.

(b) The stresses and allowable pressures are grouped by materials and listed for stated temperatures. Straight-line interpolation between temperatures is permissible.

A302.3.2 Bases for Allowable Stresses and Pressures [1]

(a) Thermoplastics. The method of determining HDS is described in ASTM D 2837. HDS values are given in Table B-1 for those materials and temperatures for which sufficient data have been compiled to substantiate the determination of stress.

(b) Reinforced Thermosetting Resin (Laminated). The design stress (DS) values for materials listed in Table B-2 shall be one-tenth of the minimum tensile strengths specified in Table 1 of ASTM C 582 and are valid only in the temperature range from −29°C (−20°F) through 82°C (180°F).

(c) Reinforced Thermosetting Resin and Reinforced Plastic Mortar (Filament Wound and Centrifugally Cast). The hydrostatic design basis stress (HDBS) values for materials listed in Table B-3 shall be obtained by the procedures in ASTM D 2992 and are valid only at 23°C (73°F). HDS shall be obtained by multiplying the HDBS by a service (design) factor[2] selected for the application, in accordance with procedures described in ASTM D 2992, within the following limits.

(1) When using the cyclic HDBS, the service (design) factor F shall not exceed 1.0.

(2) When using the static HDBS, the service (design) factor F shall not exceed 0.5.

(d) Other Materials. Allowable pressures in Tables B-4 and B-5 have been determined conservatively from physical properties of materials conforming to the listed specifications, and have been confirmed by extensive experience. Use of other materials shall be qualified as required by para. A304.7.2.

A302.3.3 Limits of Calculated Stresses Due to Sustained Loads [1]

(a) Internal Pressure Stresses. Limits of stress due to internal pressure are covered in para. A304.

(b) External Pressure Stresses. Stresses due to uniform external pressure shall be considered safe when the wall thickness of the component and its means of stiffening have been qualified as required by para. A304.7.2.

(c) External Loading Stresses. Design of piping under external loading shall be based on the following:

(1) Thermoplastic Piping. ASTM D 2321 or AWWA C900.

(2) Reinforced Thermosetting Resin (RTR) and Reinforced Plastic Mortar (RPM) Piping. ASTM D 3839 or Appendix A of AWWA C950.

(3) Strain and possible buckling shall be considered when determining the maximum allowable deflection in (1) or (2) above, but in no case shall the allowable diametral deflection exceed 5% of the pipe inside diameter.

(4) Nonmetallic piping not covered in (1) or (2) above shall be subjected to a crushing or three-edge bearing test in accordance with ASTM C 14 or C 301; the allowable load shall be 25% of the minimum value obtained.

---

[1] Titles of ASTM Specifications and AWWA Standards referenced herein are:
ASTM C 14, Concrete Sewer, Storm Drain, and Culvert Pipe
ASTM C 301, Method of Testing Vitrified Clay Pipe
ASTM C 582, Contact-Molded Reinforced Thermosetting Plastic (RTP) Laminates for Corrosion Resistant Equipment
ASTM D 2321, Practice for Underground Installation of Flexible Thermoplastic Pipe
ASTM D 2837, Test Method for Obtaining Hydrostatic Design Basis for Thermoplastic Pipe Materials
ASTM D 2992, Practice for Obtaining Hydrostatic or Pressure Design Basis for "Fiberglass" (Glass-Fiber-RTR) Pipe and Fittings
ASTM D 3839, Underground Installation of Fiberglass Pipe
AWWA C900, PVC Pressure Pipe, 4-inch through 12-inch, for Water
AWWA C950, Glass-Fiber-Reinforced Thermosetting Resin Pressure Pipe

[2] The service (design) factor F should be selected by the designer after evaluating fully the service conditions and the engineering properties of the specific material under consideration. Aside from the limits in paras. A302.3.2(c)(1) and (2), it is not the intent of this Code to specify service (design) factors.

Copyright ASME International
Provided by IHS under license with ASME
No reproduction or networking permitted without license from IHS
Not for Resale

A302.3.4 Limits of Calculated Stresses Due to Occasional Loads

(04) *(a) Operation.* The sum of the stresses in any component in a piping system due to sustained loads, such as pressure and weight, and of the stresses produced by occasional loads, such as wind or earthquake, shall not exceed the limits in the applicable part of para. A302.3.3. Wind and earthquake forces need not be considered as acting concurrently.

(b) Test. Stresses due to test conditions are not subject to the limitations in para. A302.3.3. It is not necessary to consider other occasional loads, such as wind and earthquake, as occurring concurrently with test loads.

A302.4 Allowances

Paragraph 302.4 applies in its entirety.

PART 2
PRESSURE DESIGN OF PIPING COMPONENTS

A303 GENERAL

Paragraph 303 applies, except that references to Table A326.1 and para. A302.2.1 replace references to Table 326.1 and para. 302.2.1. For nonmetallic components, reference to para. A304 replaces reference to para. 304.

A304 PRESSURE DESIGN OF PIPING COMPONENTS

A304.1 Straight Pipe

A304.1.1 General

(a) The required thickness of straight sections of pipe shall be determined by Eq. (25).

$$t_m = t + c \tag{25}$$

The minimum thickness T for the pipe selected, considering manufacturer's minus tolerance, shall be not less than t_m.

(b) The following nomenclature is used in the equations for pressure design of straight pipe.

c = the sum of mechanical allowances (thread or groove depth) plus corrosion and erosion allowance. For threaded components, the nominal thread depth (dimension h of ASME B1.20.1 or equivalent) shall apply. For machined surfaces or grooves where the tolerance is not specified, the tolerance shall be assumed to be 0.5 mm (0.02 in.) in addition to the specified depth of the cut.

D = outside diameter of pipe

F = service (design) factor. See para. A302.3.2(c).

P = internal design gage pressure

S = design stress from applicable Table in Appendix B

T = pipe wall thickness (measured or minimum per purchase specification)

t = pressure design thickness, as calculated in accordance with para. A304.1.2 for internal pressure or as determined in accordance with para. A304.1.3 for external pressure

t_m = minimum required thickness, including mechanical, corrosion, and erosion allowances

A304.1.2 Straight Pipe Under Internal Pressure. The internal pressure design thickness t shall be not less than that calculated by one of the following equations, using stress values listed in or derived from the appropriate table in Appendix B.

(a) Thermoplastic Pipe [See Para. A302.3.2(a)]

$$t = \frac{PD}{2S + P} \text{(Table B-1)} \tag{26a}$$

(b) RTR (Laminated) Pipe [See Para. A302.3.2(b)]

$$t = \frac{PD}{2S + P} \text{(Table B-2)} \tag{26b}$$[3]

(c) RTR (Filament Wound) and RPM (Centrifugally Cast) Pipe [See Para. A302.3.2(c)]

$$t = \frac{PD}{2SF + P} \text{(Table B-3)} \tag{26c}$$[3]

A304.1.3 Straight Pipe Under External Pressure

(a) Nonmetallic Pipe. The external pressure design thickness t shall be qualified as required by para. A304.7.2.

(b) Metallic Pipe Lined With Nonmetals

(1) The external pressure design thickness t for the base (outer) material shall be determined in accordance with para. 304.1.3.

(2) The external pressure design thickness t for the lining material shall be qualified as required by para. A304.7.2.

A304.2 Curved and Mitered Segments of Pipe

A304.2.1 Pipe Bends. The minimum required thickness t_m of a bend, after bending, shall be determined as for straight pipe in accordance with para. A304.1.

A304.2.2 Elbows. Manufactured elbows not in accordance with para. A303 shall be qualified as required by para. A304.7.2.

A304.2.3 Miter Bends. Miter bends shall be qualified as required by para. A304.7.2.

A304.3 Branch Connections

A304.3.1 General. A pipe having a branch connection is weakened by the opening that must be made in it

[3] The internal design pressure thickness t shall not include any thickness of the pipe wall reinforced with less than 20% by weight of reinforcing fibers.

Copyright ASME International
Provided by IHS under license with ASME
No reproduction or networking permitted without license from IHS
Not for Resale

and, unless the wall thickness of the pipe is sufficiently in excess of that required to sustain the pressure, it is necessary to provide added reinforcement. The amount of reinforcement shall be qualified as required by para. A304.7.2 except as provided in para. A304.3.2.

A304.3.2 Branch Connections Using Fittings. It may be assumed without calculation that a branch connection has adequate strength to sustain the internal and external pressure which will be applied to it if it utilizes a fitting (a tee, lateral, or cross) in accordance with para. A303.

A304.3.3 Additional Design Considerations. The requirements of paras. A304.3.1 and A304.3.2 are intended to assure satisfactory performance of a branch connection subjected only to internal or external pressure. The designer shall also consider paras. 304.3.5(a), (c), and (d).

A304.4 Closures

Closures not in accordance with para. A303 shall be qualified as required by para. A304.7.2.

A304.5 Pressure Design of Flanges

A304.5.1 General

(a) Flanges not in accordance with para. A303 or A304.5.1(b) or (c) shall be qualified as required by para. A304.7.2.

(b) Flanges for use with flat ring gaskets may be designed in accordance with BPV Code, Section VIII, Division 1, Appendix 2, except that the allowable stresses and temperature limits of this Code shall govern. Nomenclature shall be as defined in the BPV Code, except for the following:

P = design gage pressure
S_a = bolt design stress at atmospheric temperature[4]
S_b = bolt design stress at design temperature[4]
S_f = allowable stress for flange material from Table B-1, B-2, or B-3

(c) The flange design rules in para. A304.5.1(b) are not applicable to designs employing full face gaskets which extend beyond the bolts, usually to the outside diameter of the flange, or whose flanges are in solid contact beyond the bolts. The forces and reactions in such a joint differ from those joints employing flat ring gaskets, and the flange should be designed in accordance with BPV Code, Section VIII, Division 1, Appendix Y.

A304.5.2 Blind Flanges. Blind flanges not in accordance with para. A303 may be designed in accordance with para. 304.5.2, except that allowable stress S shall be taken from Tables in Appendix B. Otherwise, they shall be qualified as required by para. A304.7.2.

[4] Bolt design stresses shall not exceed those in Table A-2.

A304.6 Reducers

Reducers not in accordance with para. A303 shall be qualified as required by para. A304.7.2.

A304.7 Pressure Design of Other Components

A304.7.1 Listed Components. Other pressure containing components, manufactured in accordance with standards in Table A326.1 but not covered elsewhere in para. A304, may be utilized in accordance with para. A303.

A304.7.2 Unlisted Components and Elements. Pressure design of unlisted components and joints, to which the rules elsewhere in para. A304 do not apply, shall be based on calculations consistent with the design criteria of this Code. Calculations shall be substantiated by one or both of the means stated in (a) and (b) below, considering applicable ambient and dynamic effects in paras. 301.4 through 301.11:

(a) extensive, successful service experience under comparable design conditions with similarly proportioned components made of the same or like material;

(b) performance test under design conditions including applicable dynamic and creep effects, continued for a time period sufficient to determine the acceptability of the component or joint for its design life;

(c) for (a) or (b) above, the designer may interpolate between sizes, wall thicknesses, and pressure classes, and may determine analogies among related materials.

A304.7.3 Nonmetallic Components With Metallic Pressure Parts. Components not covered by standards in Table A326.1, in which both nonmetallic and metallic parts contain the pressure, shall be evaluated by applicable requirements of para. 304.7.2 as well as those of para. A304.7.2.

PART 3
FLUID SERVICE REQUIREMENTS FOR PIPING COMPONENTS

A305 PIPE

Listed nonmetallic pipe may be used in Normal Fluid Service, subject to the limitations of the pressure-containing material and para. A323.4. Unlisted pipe may be used only in accordance with para. A302.2.3.

A306 NONMETALLIC FITTINGS, BENDS, MITERS, LAPS, AND BRANCH CONNECTIONS

General. Fittings, bends, miters, laps, and branch connections may be used in accordance with paras. A306.1 through A306.5. Pipe and other materials used in such components shall be suitable for the manufacturing process and the fluid service.

Copyright ASME International
Provided by IHS under license with ASME
No reproduction or networking permitted without license from IHS
Not for Resale

A306.1 Pipe Fittings

A306.1.1 Listed Fittings. Listed fittings may be used in Normal Fluid Service subject to limitations on materials.

A306.1.2 Unlisted Fittings. Unlisted fittings may be used only in accordance with para. A302.2.3.

A306.2 Pipe Bends

A306.2.1 General. A bend made in accordance with para. A332 and verified for pressure design in accordance with para. A304.2.1 shall be suitable for the same service as the pipe from which it is made.

A306.2.2 Corrugated and Other Bends. Bends of other designs (such as creased or corrugated) shall be qualified for pressure design as required by para. A304.7.2.

A306.3 Miter Bends

Except as specified in para. 306.3.2, a miter bend which conforms to para. A304.2.3 may be used in Normal Fluid Service.

A306.4 Fabricated or Flared Laps

The following requirements do not apply to fittings conforming to para. A306.1.

A306.4.1 Fabricated Laps

(a) The requirements in paras. 306.4.1(a) and (b) shall be met.

(b) Lap material shall be suitable for the service conditions. Pressure design shall be qualified as required by para. A304.7.2.

A306.4.2 Flared Laps. Flared laps shall not be used in nonmetallic piping.

A306.5 Fabricated Branch Connections

The following requirements do not apply to fittings conforming to para. A306.1.

A306.5.1 General. A fabricated branch connection made by bonding the branch pipe directly to the header pipe, with or without added reinforcement as stated in para. 328.5.4, and shown in Fig. 328.5.4, may be used in Normal Fluid Service, provided that pressure design is qualified as required by para. A304.7.2.

A306.5.2 Specific Requirements. Fabricated branch connections shall be made as specified in para. A328.5.

A307 NONMETALLIC VALVES AND SPECIALTY COMPONENTS

Paragraph 307 applies in its entirety, except that in para. 307.1.2 reference to paras. A302.2.3 and A304.7.2 replaces reference to paras. 302.2.3 and 304.7.2, respectively.

A308 FLANGES, BLANKS, FLANGE FACINGS, AND GASKETS

A308.1 General

Paragraph 308.1 applies, except that in para. 308.1.2 reference to para. A302.2.3 replaces reference to para. 302.2.3.

A308.2 Nonmetallic Flanges

A308.2.1 General

(a) Nonmetallic flanges shall be adequate, with suitable facing, gasketing, and bolting, to develop the full rating of the joint and to withstand expected external loadings.

(b) The designer should consult the manufacturer for ratings of nonmetallic flanges.

A308.2.2 Threaded Flanges. Threaded flanges are subject to the requirements for threaded joints in para. A314.

A308.3 Flange Facings

Paragraph 308.3 applies in its entirety.

A308.4 Limitations on Gaskets

See also Appendix F, para. F308.4.

A308.4.1 Lining Used as Facing or Gasket. Lining material extended over the flange face and used as a gasket shall conform to para. 308.4.

A309 BOLTING

Bolting includes bolts, bolt studs, studs, cap screws, nuts, and washers. See Appendix F, para. F309.

A309.1 General

Paragraph 309.1 applies in its entirety.

Copyright ASME International
Provided by IHS under license with ASME
No reproduction or networking permitted without license from IHS
Not for Resale

A309.2 Specific Bolting

Any bolting which meets the requirements of para. 309.1 may be used with any combination of flange materials and flange facings. Joint assembly shall conform to the requirements of para. A335.2.

A309.3 Tapped Holes in Nonmetallic Components

Tapped holes for pressure retaining bolting in nonmetallic piping components may be used provided pressure design is qualified as required by para. A304.7.2.

PART 4
FLUID SERVICE REQUIREMENTS FOR PIPING JOINTS

A310 GENERAL

Paragraph 310 applies in its entirety.

A311 BONDED JOINTS IN PLASTICS

A311.1 General

Bonding shall be in accordance with para. A328 and examination shall be in accordance with para. A341.4.1 for use in Normal Fluid Service, subject to the limitations of the material.

A311.2 Specific Requirements

A311.2.1 Fillet Bonds. A fillet bond may be used only in conjunction with a qualified hot gas welding procedure for bonding (see para. A328.5.2).

A311.2.2 Seal Bonds. A seal bond may be used only to prevent leakage of a threaded joint and only if it has been demonstrated that there will be no deleterious effect on the materials bonded.

A311.2.3 Joints Limited to Category D Fluid Service. Joints which have been examined in accordance with para. 341.4.2 may be used only for Category D Fluid Service.

A312 FLANGED JOINTS

The designer should consult the manufacturer for ratings of flanged joints in nonmetallic piping and in piping lined with nonmetals.

A313 EXPANDED JOINTS

Paragraph 313 applies in its entirety.

A314 THREADED JOINTS

A314.1 General

A threaded joint is suitable for use in Normal Fluid Service, subject to the limitations of the material and requirements elsewhere in para. A314. A joint conforming to para. 314.1(d) shall not be used.

A314.2 Specific Requirements

A314.2.1 Thermoplastic Piping. Threaded joints shall conform to all of the following. (04)

(a) The pipe wall shall be at least as thick as Schedule 80 as defined in ASTM D 1785.

(b) Threads shall be NPT, and shall conform to ASME B1.20.1 or ASTM F 1498.

(c) Threads shall conform to applicable standards in Table A326.1.

(d) A suitable thread sealant shall be used.

A314.2.2 Reinforced Thermosetting Resin Piping. Threaded joints in reinforced thermosetting resin (RTR) piping shall conform to the following.

(a) Male threads shall be factory cut or molded on special thick-walled pipe ends.

(b) Matching female threads shall be factory cut or molded in the fittings.

(c) Threading of plain ends of RTR pipe is not permitted, except where such threads are limited to the function of a mechanical lock to matching female threads factory cut or molded in the bottom portions of fittings with deep sockets.

(d) Factory cut or molded threaded nipples, couplings, or adapters, bonded to plain-end RTR pipe and fittings, may be used where it is necessary to provide connections to threaded metallic piping.

A314.2.3 Reinforced Plastic Mortar Piping. Threaded joints are not permitted in reinforced plastic mortar (RPM) piping.

A315 TUBING JOINTS

Paragraph 315 applies in its entirety, subject to material limitations, exclusion of 315.2(b) regarding severe cyclic conditions, and replacement of reference to Table 326.1 and para. 304.7.2 with reference to Table A326.1 and para. A304.7.2, respectively.

A316 CAULKED JOINTS

Paragraph 316 applies in its entirety.

A318 SPECIAL JOINTS

Special joints are those not covered elsewhere in Chapter VII, Part 4, such as bell type and packed gland type joints.

A318.1 General

Paragraph 318.1 applies in its entirety, except that, in para. 318.1.2, reference to para. A304.7.2 replaces reference to para. 304.7.2.

Copyright ASME International
Provided by IHS under license with ASME
No reproduction or networking permitted without license from IHS
Not for Resale

A318.2 Specific Requirements

Paragraph 318.2 applies with the exception of para. 318.2.3.

A318.3 Piping Lined With Nonmetals

A318.3.1 Welding of Metallic Piping

(a) General. Joints made in accordance with the rules in para. A329.1 may be used in Normal Fluid Service, subject to material limitations.

(b) Specific Requirements. Welds shall be limited to those which do not affect the serviceability of the lining.

A318.3.2 Flared Linings

(a) General. Flared ends of linings made in accordance with the rules in para. A329.2 may be used in Normal Fluid Service, subject to material limitations.

(b) Specific Requirements. Flaring shall be limited to applications which do not affect the serviceability of the lining.

A318.4 Flexible Elastomeric Sealed Joints

Flexible elastomeric seals conforming to the following may be used in Normal Fluid Service, subject to material limitations.

(a) Seals for joints in thermoplastic piping shall conform to ASTM D 3139.

(b) Seals for joints in RTR and RPM piping shall conform to ASTM D 4161.

PART 5
FLEXIBILITY AND SUPPORT

A319 FLEXIBILITY OF NONMETALLIC PIPING

A319.1 Requirements

A319.1.1 Basic Requirements. Piping systems shall be designed to prevent thermal expansion or contraction, pressure expansion, or movement of piping supports and terminals from causing

(a) failure of piping or supports from overstrain or fatigue

(b) leakage at joints, or

(c) detrimental stresses or distortion in piping or in connected equipment (pumps, for example), resulting from excessive thrusts and moments in the piping

A319.1.2 Specific Requirements

(a) In para. A319, guidance, concepts, and data are given to assist the designer in assuring adequate flexibility in piping systems. No specific stress-limiting criteria or methods of stress analysis are presented since stress–strain behavior of most nonmetals differs considerably from that of metals covered by para. 319 and is less well defined for mathematical analysis.

(b) Piping systems should be designed and laid out so that flexural stresses resulting from displacement due to expansion, contraction, and other movement are minimized. This concept requires special attention to supports, terminals, and other restraints, as well as to the techniques outlined in para. A319.7. See also para. A319.2.2(b).

(c) Further information on design of thermoplastic piping can be found in PPI Technical Report TR-21.

A319.2 Concepts

A319.2.1 Displacement Strains. The concepts of strain imposed by restraint of thermal expansion or contraction, and by external movement, described in para. 319.2.1, apply in principle to nonmetals. Nevertheless, the assumption that stresses throughout the piping system can be predicted from these strains because of fully elastic behavior of the piping materials is not generally valid.

(a) In thermoplastics and some RTR and RPM piping, displacement strains are not likely to produce immediate failure but may result in detrimental distortion. Especially in thermoplastic piping, progressive deformation may occur upon repeated thermal cycling or on prolonged exposure to elevated temperature.

(b) In brittle piping (such as porcelain, glass, etc.) and some RTR and RPM piping, the materials show rigid behavior and develop high displacement stresses up to the point of sudden breakage due to overstrain.

A319.2.2 Displacement Stresses

(a) Elastic Behavior. The assumption that displacement strains will produce proportional stress over a sufficiently wide range to justify an elastic stress analysis often is not valid for nonmetals. In brittle piping, strains initially will produce relatively large elastic stresses. The total displacement strain must be kept small, however, since overstrain results in failure rather than plastic deformation. In thermoplastic and thermosetting resin piping, strains generally will produce stresses of the overstrained (plastic) type, even at relatively low values of total displacement strain. If a method of flexibility analysis which assumes elastic behavior is selected, the designer must be able to demonstrate its validity for the piping system under consideration, and shall establish safe limits for computed stresses.

(b) Overstrained Behavior. Stresses cannot be considered proportional to displacement strains throughout a piping system in which an excessive amount of strain may occur in localized portions of the piping [an unbalanced system; see para. 319.2.2(b)] or in which elastic behavior of the piping material cannot be assumed. Overstrain shall be minimized by system layout and excessive displacements shall be minimized by special joints or expansion devices (see para. A319.7).

A319.2.3 Cold Spring. Cold spring is the intentional deformation of piping during assembly to produce a desired initial displacement or stress. Cold spring may

Copyright ASME International
Provided by IHS under license with ASME
No reproduction or networking permitted without license from IHS
Not for Resale

be beneficial in serving to balance the magnitude of stress under initial and extreme displacement conditions. When cold spring is properly applied, there is less likelihood of overstrain during initial operation. There is also less deviation from as-installed dimensions during initial operation, so that hangers will not be displaced as far from their original settings. No credit for cold spring is permitted in stress range calculations, or in calculating thrusts and moments.

A319.3 Properties for Flexibility Analysis

A319.3.1 Thermal Expansion Data. Appendix C lists coefficients of thermal expansion for several nonmetals. More precise values in some instances may be obtainable from manufacturers of components. If these values are to be used in stress analysis, the thermal displacements shall be determined as stated in para. 319.3.1.

A319.3.2 Modulus of Elasticity. Appendix C lists representative data on the tensile modulus of elasticity E for several nonmetals as obtained under typical laboratory rate of strain (loading) conditions. Because of their viscoelasticity, the effective moduli of plastics under actual conditions of use will depend on both the specific course of the strain (or load) with time and the specific characteristics of the plastic. More precise values of the short term and working estimates of effective moduli of elasticity for given conditions of loading and temperature may be obtainable from the manufacturer. The modulus may also vary with the orientation of the specimen, especially for resins with filament-wound reinforcement. For materials and temperatures not listed, refer to ASTM or PPI documents, or to manufacturer's data.

A319.3.3 Poisson's Ratio. Poisson's ratio varies widely depending upon material and temperature. For that reason simplified formulas used in stress analysis for metals may not be valid for nonmetals.

A319.3.4 Dimensions. Nominal thicknesses and outside diameters of pipe and fittings shall be used in flexibility calculations.

A319.4 Analysis

A319.4.1 Formal Analysis Not Required. No formal analysis is required for a piping system which

(a) duplicates, or replaces without significant change, a system operating with a successful service record

(b) can readily be judged adequate by comparison with previously analyzed systems, or

(c) is laid out with a conservative margin of inherent flexibility, or employs joining methods or expansion joint devices, or a combination of these methods, in accordance with manufacturers' instructions

A319.4.2 Formal Analysis Requirements. For a piping system which does not meet the above criteria, the designer shall demonstrate adequate flexibility by simplified, approximate, or comprehensive stress analysis, using a method which can be shown to be valid for the specific case. If substantially elastic behavior can be demonstrated for the piping system [see para. A319.2.2(a)], methods outlined in para. 319.4 may be applicable.

A319.5 Reactions

Paragraph 319.5 may be applicable if a formal stress analysis can be shown to be valid for the specific case.

A319.6 Movements

Special attention shall be given to movement (displacement or rotation) of piping with respect to supports and points of close clearance. Movements of the run pipe at the junction of a small branch connection shall be considered in determining the need for flexibility in the branch pipe.

A319.7 Means of Increasing Flexibility

Piping layout often provides adequate inherent flexibility through changes in direction, wherein displacements produce chiefly bending and torsional strains of low magnitude. The amount of tension or compression strain (which can produce larger reactions) usually is small.

Where piping lacks inherent flexibility or is unbalanced, additional flexibility shall be provided by one or more of the following means: bends, loops, or offsets; swivel or flexible joints; corrugated, bellows, or slip-joint expansion joints; or other devices permitting angular, rotational, or axial movement. Suitable anchors, ties, or other devices shall be provided as necessary to resist end forces produced by fluid pressure, frictional resistance to movement, and other causes.

A321 PIPING SUPPORT

Paragraph 321 applies in its entirety.

A321.5 Supports for Nonmetallic Piping

A321.5.1 General. In addition to other applicable requirements of para. 321, supports, guides, and anchors shall be selected and applied to comply with the principles and requirements of para. A319 and the following.

(a) Piping shall be supported, guided, and anchored in such a manner as to prevent damage to the piping. Point loads and narrow areas of contact between piping and supports shall be avoided. Suitable padding shall be placed between piping and supports where damage to piping may occur.

(b) Valves and equipment which would transmit excessive loads to the piping shall be independently supported to prevent such loads.

(c) Consideration shall be given to mechanical guarding in traffic areas.

Copyright ASME International
Provided by IHS under license with ASME
No reproduction or networking permitted without license from IHS Not for Resale

(d) Manufacturers' recommendations for support shall be considered.

A321.5.2 Supports for Thermoplastic, RTR, and RPM Piping. Supports shall be spaced to avoid excessive sag or deformation at the design temperature and within the design life of the piping system. Decreases in the modulus of elasticity with increasing temperature and creep of material with time shall be considered when applicable. The coefficient of thermal expansion shall be considered in the design and location of supports.

A321.5.3 Supports for Brittle Piping. Brittle piping, such as glass, shall be well supported but free of hindrance to expansion or other movement. Not more than one anchor shall be provided in any straight run without an expansion joint.

PART 6
SYSTEMS

A322 SPECIFIC PIPING SYSTEMS

A322.3 Instrument Piping

Paragraph 322.3 applies in its entirety, except that references to paras. A301 and A302.2.4 replace references to paras. 301 and 302.2.4, respectively.

A322.6 Pressure Relieving Systems

Paragraph 322.6 applies in its entirety, except for para. 322.6.3. See para. A322.6.3 below.

A322.6.3 Overpressure Protection. Paragraph 322.6.3 applies, except that maximum relieving pressure shall be in accordance with para. A302.2.4.

PART 7
MATERIALS

A323 GENERAL REQUIREMENTS

A323.1 Materials and Specifications

Paragraph 323.1 applies except for para. 323.1.4. See para. A323.1.4 below.

A323.1.4 Reclaimed Materials. Reclaimed piping components may be used, provided they are properly identified as conforming to a listed or published specification (see para. 323.1.1) and otherwise meet the requirements of this Code. The user shall verify that components are suitable for the intended service. Sufficient cleaning, examination, and testing shall be performed to determine the minimum available wall thickness and freedom from any of the following to an extent that would be unacceptable in the intended service:

(a) imperfections
(b) reduction of mechanical properties, or
(c) absorption of deleterious substances

A323.2 Temperature Limitations, Nonmetals

The designer shall verify that materials which meet other requirements of the Code are suitable for service throughout the operating temperature range. Also see the Notes for Tables B-1 through B-5 in Appendix B.

A323.2.1 Upper Temperature Limits, Listed Materials

(a) Except as provided in (b) below, a listed material shall not be used at a design temperature higher than the maximum for which a stress value or rating is shown, or higher than the maximum recommended temperature in Table A323.4.2C for RTR materials and in Table A323.4.3 for thermoplastics used as linings.

(b) A listed material may be used at a temperature higher than the maximum stated in (a) above if there is no prohibition in Appendix B or elsewhere in the Code, and if the designer verifies the serviceability of the material in accordance with para. 323.2.4.

A323.2.2 Lower Temperature Limits, Listed Materials

(a) Materials for use at design minimum temperatures below certain limits must usually be tested to determine that they have suitable toughness for use in Code piping. Table A323.2.2 sets forth those requirements.

(b) When materials are qualified for use at temperatures below the minimum temperature listed in Appendix B, the allowable stresses or pressures shall not exceed the values for the lowest temperatures shown.

(c) See also the recommended limits in Table A323.4.2C for reinforced thermosetting resin pipe and in Table A323.4.3 for thermoplastics used as linings.

A323.2.3 Temperature Limits, Unlisted Materials. Paragraph 323.2.3 applies.

A323.2.4 Verification of Serviceability. When an unlisted material is to be used, or when a listed material is to be used above or below the limits in Appendix B or Table A323.4.2C or Table A323.4.3, the designer shall comply with the requirements of para. 323.2.4.

A323.4 Fluid Service Requirements for Nonmetallic Materials

A323.4.1 General

(a) Nonmetallic materials shall be safeguarded against excessive temperature, shock, vibration, pulsation, and mechanical abuse in all fluid services.

(b) Requirements in para. A323.4 apply to pressure containing parts. They do not apply to materials used for supports, gaskets, or packing. See also Appendix F, para. FA323.4.

A323.4.2 Specific Requirements

(a) Thermoplastics

Copyright ASME International
Provided by IHS under license with ASME
No reproduction or networking permitted without license from IHS
Not for Resale

Table A323.2.2 Requirements for Low Temperature Toughness Tests for Nonmetals
In addition to the requirements of the material specification

Type of Material	Column A At or Above Listed Minimum Temperature	Column B Below Listed Minimum Temperature
Listed nonmetallic materials	No added requirement	The designer shall have test results at or below the lowest expected service temperature, which assure that the materials and bonds will have adequate toughness and are suitable at the design minimum temperature.
Unlisted materials	An unlisted material shall conform to a published specification. Where composition, properties, and product form are comparable to those of a listed material, requirements for the corresponding listed material shall be met. Other unlisted materials shall be qualified as required in Column B.	

Table A323.4.2C Recommended Temperature Limits for Reinforced Thermosetting Resin Pipe

Materials		Recommended Temperature Limits			
		Minimum		Maximum	
Resin	Reinforcing	°C	°F	°C	°F
Epoxy	Glass fiber	−29	−20	149	300
Phenolic	Glass fiber	−29	−20	149	300
Furan	Carbon	−29	−20	93	200
Furan	Glass fiber	−29	−20	93	200
Polyester	Glass fiber	−29	−20	93	200
Vinyl ester	Glass fiber	−29	−20	93	200

GENERAL NOTE: These temperature limits apply only to materials listed and do not reflect evidence of successful use in specific fluid services at these temperatures. The designer should consult the manufacturer for specific applications, particularly as the temperature limits are approached.

(04) *(1)* They shall not be used in flammable fluid service above ground, unless all of the following are met:

(a) The size of the piping does not exceed DN 25 (NPS 1).

(b) Owner's approval is obtained.

(c) Safeguarding per Appendix G is provided.

(d) The precautions of Appendix F, paras. F323.1(a) through (c) are considered.

(2) They shall be safeguarded when used in other than Category D Fluid Service.

(3) PVC and CPVC shall not be used in compressed air or other compressed gas service.

(b) Reinforced Plastic Mortars (RPM) Piping. This piping shall be safeguarded when used in other than Category D Fluid Service.

(c) Reinforced Thermosetting Resins (RTR) Piping. This piping shall be safeguarded when used in toxic or flammable fluid services. Table A323.4.2C gives the recommended temperature limits for reinforced thermosetting resins.

(d) Borosilicate Glass and Porcelain

(1) They shall be safeguarded when used in toxic or flammable fluid services.

(2) They shall be safeguarded against large, rapid temperature changes in fluid services.

A323.4.3 Piping Lined With Nonmetals

(a) Metallic Piping Lined With Nonmetals. Fluid service requirements for the base (outer) material in para. 323.4 govern except as stated in (d) below.

(b) Nonmetallic Piping Lined With Nonmetals. Fluid service requirements for the base (outer) material in para. A323.4.2 govern, except as stated in (d) below.

(c) Nonmetallic Lining Materials. The lining may be any material that, in the judgment of the user, is suitable for the intended service and for the method of manufacture and assembly of the piping. Fluid service requirements in para. A323.4.2 do not apply to materials used as linings.

(d) Properties of both the base and lining materials, and of any bond between them, shall be considered in establishing temperature limitations. Table A323.4.3 gives recommended temperature limits for thermoplastic materials used as linings.

A323.5 Deterioration of Materials in Service

Paragraph 323.5 applies in its entirety.

--`,,```,,,,````-`-`,,`,,`,`,,`---

Copyright ASME International
Provided by IHS under license with ASME
No reproduction or networking permitted without license from IHS Not for Resale

(04)

Table A323.4.3 Recommended Temperature Limits for Thermoplastics Used as Linings

Materials [Note (1)]	Minimum °C	Minimum °F	Maximum °C	Maximum °F
PFA	−198	−325	260	500
PTFE	−198	−325	260	500
FEP	−198	−325	204	400
ECTFE	−198	−325	171	340
ETFE	−198	−325	149	300
PVDF	−18	0	135	275
PP	−18	0	107	225
PVDC	−18	0	79	175

GENERAL NOTE: These temperature limits are based on material tests and do not necessarily reflect evidence of successful use as piping component linings in specific fluid services at these temperatures. The designer should consult the manufacturer for specific applications, particularly as temperature limits are approached.

NOTE:

(1) See para. A326.4 for definitions of materials.

A325 MATERIALS — MISCELLANEOUS

Paragraph 325 applies in its entirety.

PART 8
STANDARDS FOR PIPING COMPONENTS

A326 DIMENSIONS AND RATINGS OF COMPONENTS

A326.1 Requirements

Paragraph 326 applies in its entirety except that references to Table A326.1 and Appendix B replace references to Table 326.1 and Appendix A, respectively.

A326.4 Abbreviations in Table A326.1 and Appendix B

The abbreviations tabulated below are used in this Chapter to replace lengthy phrases in the text and in the titles of standards in Table A326.1 and the Specifications Index for Appendix B. Those marked with an asterisk (*) are in accordance with ASTM D 1600, Terminology Relating to Abbreviations, Acronyms, and Codes for Terms Relating to Plastics.

Abbreviation	Term
*ABS	Acrylonitrile-Butadiene-Styrene
*CAB	Cellulose Acetate-Butyrate
CP	Chlorinated Polyether
*CPVC	Chlorinated Poly (Vinyl Chloride)
ECTFE	Ethylene-Chlorotrifluoroethylene
ETFE	Ethylene-Tetrafluoroethylene
*FEP	Perfluoro (Ethylene-Propylene) copolymer
PB	Polybutylene
*PE	Polyethylene
PFA	Perfluoro (Alkoxyalkane) copolymer
*POM	Polyacetal, Poly (Oxymethylene)
POP	Poly (Phenylene Oxide)
*PP	Polypropylene
*PPS	Poly (Phenylene Sulfide)
PR	Pressure Rated
*PTFE	Polytetrafluoroethylene
*PVC	Poly (Vinyl Chloride)
*PVDC	Poly (Vinylidene Chloride)
*PVDF	Poly (Vinylidene Fluoride)
RPM	Reinforced Plastic Mortar
RTR	Reinforced Thermosetting Resin
SDR	Standard Dimensional Ratio

PART 9
FABRICATION, ASSEMBLY, AND ERECTION

A327 GENERAL

Piping materials and components are prepared for assembly and erection by one or more of the fabrication processes in paras. A328, A329, A332, and A334. When

Copyright ASME International
Provided by IHS under license with ASME
No reproduction or networking permitted without license from IHS
Not for Resale

Table A326.1 Component Standards

Standard or Specification	Designation
Nonmetallic Fittings	
Process Glass Pipe and Fittings	ASTM C 599
Threaded PVC Plastic Pipe Fittings, Sch 80	ASTM D 2464
PVC Plastic Pipe Fittings, Sch 40	ASTM D 2466
Socket-Type PVC Plastic Pipe Fittings, Sch 80	ASTM D 2467
Socket-Type ABS Plastic Pipe Fittings, Sch 40	ASTM D 2468
Thermoplastic Gas Pressure Pipe, Tubing, and Fittings	ASTM D 2513
Reinforced Epoxy Resin Gas Pressure Pipe and Fittings	ASTM D 2517
Plastic Insert Fittings for PE Plastic Pipe	ASTM D 2609
Socket-Type PE Fittings for Outside Diameter-Controlled PE Pipe and Tubing	ASTM D 2683
CPVC Plastic Hot and Cold Water Distribution Systems	ASTM D 2846
Butt Heat Fusion PE Plastic Fittings for PE Plastic Pipe and Tubing	ASTM D 3261
PB Plastic Hot-Water Distribution Systems	ASTM D 3309
Fiberglass RTR Pipe Fittings for Nonpressure Applications [Note (1)]	ASTM D 3840
RTR Flanges	ASTM D 4024
Contact Molded Fiberglass RTR Flanges [Note (1)]	ASTM D 5421
PTFE Plastic-Lined Ferrous Metal Pipe and Fittings [Notes (2), (3)]	ASTM F 423
Threaded CPVC Plastic Pipe Fittings, Sch 80	ASTM F 437
Socket-Type CPVC Plastic Pipe Fittings, Sch 40	ASTM F 438
Socket-Type CPVC Plastic Pipe Fittings, Sch 80	ASTM F 439
PVDF Plastic-Lined Ferrous Metal Pipe and Fittings [Notes (2), (3)]	ASTM F 491
Propylene and PP Plastic-Lined Ferrous Metal Pipe and Fittings [Notes (2), (3)]	ASTM F 492
FEP Plastic-Lined Ferrous Metal Pipe and Fittings [Notes (2), (3)]	ASTM F 546
PVDC Plastic-Lined Ferrous Metal Pipe and Fittings [Notes (2), (3)]	ASTM F 599
PFA Plastic-Lined Ferrous Metal Pipe and Fittings [Notes (2), (3)]	ASTM F 781
Electrofusion Type Polyethylene Fittings for Outside Diameter Controlled Polyethylene Pipe and Tubing	ASTM F 1055
Plastic-Lined Ferrous Metal Pipe, Fittings, and Flanges [Note (2), (3)]	ASTM F 1545
Nonmetallic Pipes and Tubes	
PE Line Pine	API 15LE
Low Pressure Fiberglass Line Pipe	API 15LR
Reinforced Concrete Low-Head Pressure Pipe	ASTM C 361
Process Glass Pipe and Fittings	ASTM C 599
ABS Plastic Pipe, Sch 40 and 80	ASTM D 1527
PVC Plastic Pipe, Sch 40, 80 and 120	ASTM D 1785
PE Plastic Pipe, Sch 40	ASTM D 2104
PE Plastic Pipe (SIDR-PR) Based on Controlled Inside Diameter	ASTM D 2239
PVC Plastic Pressure-Rated Pipe (SDR Series)	ASTM D 2241
ABS Plastic Pipe (SDR-PR)	ASTM D 2282
Classification for Machine-Made RTR Pipe	ASTM D 2310
PE Plastic Pipe, Sch 40 & 80, Based on Outside Diameter	ASTM D 2447
Thermoplastic Gas Pressure Pipe, Tubing, and Fittings	ASTM D 2513
Reinforced Epoxy Resin Gas Pressure Pipe and Fittings	ASTM D 2517
PB Plastic Pipe (SDR-PR)	ASTM D 2662
PB Plastic Tubing	ASTM D 2666

Copyright ASME International
Provided by IHS under license with ASME
No reproduction or networking permitted without license from IHS
Not for Resale

(04)

Table A326.1 Component Standards (Cont'd)

Standard or Specification	Designation
Bell End PVC Plastic Pipe	ASTM D 2672
PE Plastic Tubing	ASTM D 2737
CPVC Plastic Hot and Cold Water Distribution System	ASTM D 2846
Filament-Wound Fiberglass RTR Pipe [Note (1)]	ASTM D 2996
Centrifugally Cast RTR Pipe	ASTM D 2997
PB Plastic Pipe (SDR-PR) Based on Outside Diameter	ASTM D 3000
PE Plastic Pipe (SDR-PR) Based on Controlled Outside Diameter	ASTM D 3035
PB Plastic Hot-Water Distribution Systems	ASTM D 3309
Fiberglass RTR Pressure Pipe [Note (1)]	ASTM D 3517
Fiberglass RTR Sewer and Industrial Pressure Pipe [Note (1)]	ASTM D 3754
PTFE Plastic-Lined Ferrous Metal Pipe and Fittings [Notes (2), (3)]	ASTM F 423
CPVC Plastic Pipe	ASTM F 441
CPVC Plastic Pipe (SDR-PR)	ASTM F 442
PVDF Plastic-Lined Ferrous Metal Pipe and Fittings [Notes (2), (3)]	ASTM F 491
Propylene and PP Plastic-Lined Ferrous Metal Pipe and Fittings [Notes (2), (3)]	ASTM F 492
FEP Plastic-Lined Ferrous Metal Pipe and Fittings [Notes (2), (3)]	ASTM F 546
PVDC Plastic-Lined Ferrous Metal Pipe and Fittings [Notes (2), (3)]	ASTM F 599
PFA Plastic-Lined Ferrous Metal Pipe and Fittings [Notes (2), (3)]	ASTM F 781
Standard Specification for Polyolefin Pipe and Fittings for Corrosive Waste Drainage Systems [Notes (2), (3)]	ASTM F 1412
Plastic-Lined Ferrous Metal Pipe, Fittings, and Flanges [Notes (2), (3)]	ASTM F 1545
Standard Specification for Polyvinylidene Fluorine (PVDF) Corrosive Water Drainage Systems	ASTM F 1673
Reinforced Concrete Pressure Pipe, Steel Cylinder Type, for Water and Other Liquids	AWWA C300
Prestressed Concrete Pressure Pipe, Steel Cylinder Type, for Water and Other Liquids	AWWA C301
Reinforced Concrete Pressure Pipe, Noncylinder Type, for Water and Other Liquids	AWWA C302
PVC Pressure Pipe, 4-inch through 12-inch, for Water	AWWA C900
Glass-Fiber-Reinforced Thermosetting Resin Pressure Pipe	AWWA C950
Miscellaneous	
Contact-Molded Reinforced Thermosetting Plastic (RTP) Laminates for Corrosion Resistant Equipment	ASTM C 582
Threads for Fiberglass RTR Pipe (60 deg stub) [Note (1)]	ASTM D 1694
Solvent Cements for ABS Plastic Pipe and Fittings	ASTM D 2235
Solvent Cements for PVC Plastic Pipe and Fittings	ASTM D 2564
Bell End PVC Plastic Pipe	ASTM D 2672
Joints for Plastic Pressure Pipes Using Flexible Elastomeric Seals	ASTM D 3139
Fiberglass RTR Pipe Joints Using Flexible Elastomeric Seals [Note (1)]	ASTM D 4161
Design and Construction of Nonmetallic Enveloped Gaskets for Corrosive Service	ASTM F 336
Solvent Cements for CPVC Plastic Pipe and Fittings	ASTM F 493
Taper Pipe Threads for 60° Thermoplastic Pipe and Fittings	ASTM F 1498

GENERAL NOTE: It is not practical to refer to a specific edition of each standard throughout the Code text. Instead, the approved edition references, along with the names and addresses of the sponsoring organizations, are shown in Appendix E.

NOTES:

(1) The term *fiberglass RTR* takes the place of the ASTM designation *fiberglass* (*glass-fiber-reinforced thermosetting resin*).

(2) This Standard allows the use of unlisted materials; see para. 323.1.2.

(3) This Standard contains no pressure-temperature ratings.

Copyright ASME International
Provided by IHS under license with ASME
No reproduction or networking permitted without license from IHS
Not for Resale

any of these processes is used in assembly and erection, requirements are the same as for fabrication.

A328 BONDING OF PLASTICS

Paragraph A328 applies only to joints in thermoplastic, RTR, and RPM piping. Bonding shall conform to paras. A328.1 through A328.7 and the applicable requirements of para. A311.

A328.1 Bonding Responsibility

Each employer is responsible for the bonding done by personnel of his organization and, except as provided in paras. A328.2.2 and A328.2.3, shall conduct the required performance qualification tests to qualify bonding procedure specifications (BPS) and bonders or bonding operators.

A328.2 Bonding Qualifications

A328.2.1 Qualification Requirements

(a) Qualification of the BPS to be used, and of the performance of bonders and bonding operators, is required. To qualify a BPS, all tests and examinations specified therein and in para. A328.2.5 shall be completed successfully.

(b) In addition to the procedure for making the bonds, the BPS shall specify at least the following:

(1) all materials and supplies (including storage requirements)

(2) tools and fixtures (including proper care and handling)

(3) environmental requirements (e.g., temperature, humidity, and methods of measurement)

(4) joint preparation

(5) dimensional requirements and tolerances

(6) cure time

(7) protection of work

(8) tests and examinations other than those required by para. A328.2.5

(9) acceptance criteria for the completed test assembly

A328.2.2 Procedure Qualification by Others. Subject to the specific approval of the Inspector, a BPS qualified by others may be used provided that

(a) the Inspector satisfies him/herself that the proposed qualified BPS has been prepared and executed by a responsible recognized organization with expertise in the field of bonding

(b) by signature, the employer accepts both the BPS and procedure qualification record (PQR) as his own

(c) the employer has at least one currently employed bonder who, while in his employ, has satisfactorily passed a performance qualification test using the proposed qualified BPS

A328.2.3 Performance Qualification by Others. Without the Inspector's specific approval, an employer shall not accept a performance qualification test made by a bonder or bonding operator for another employer. If approval is given, it is limited to work on piping using the same or equivalent BPS. An employer accepting such performance qualification tests shall obtain a copy of the performance qualification test record from the previous employer showing the name of the employer by whom the bonder or bonding operator was qualified, the date of such qualification, and the date the bonder or bonding operator last bonded pressure piping under such performance qualification.

A328.2.4 Qualification Records. The employer shall maintain a self-certified record, available to the owner or owner's agent and to the Inspector, of the BPS used and the bonders or bonding operators employed by him/her, and showing the dates and results of BPS qualifications and bonding performance qualifications.

A328.2.5 Qualification Tests. Tests, as specified in para. A328.2.1(a), shall be performed to qualify each BPS and the performance of each bonder and bonding operator. Test assemblies shall conform to (a) below and the test method shall be in accordance with either (b) or (c).

(a) Test Assembly. The assembly shall be fabricated in one pipe size in accordance with the BPS and shall contain at least one of each different type of joint identified in the BPS. More than one test assembly may be prepared if necessary to accommodate all of the joint types or to assure that at least one of each joint type is loaded in both circumferential and longitudinal directions. The size of pipe and fittings in the assembly shall be as follows.

(1) When the largest size to be joined is DN 100 (NPS 4) or smaller, the test assembly shall be the largest size to be joined.

(2) When the largest size to be joined is greater than DN 100 (NPS 4), the size of the test assembly shall be between 25% and 100% of the largest piping size to be joined, but shall be a minimum of DN 100 (NPS 4).

(b) Burst Test Method. The test assembly shall be subjected to a burst test in accordance with the applicable sections of ASTM D 1599.[5] The time to burst in this standard may be extended. The test is successful if failure initiates outside of any bonded joint.

(c) Hydrostatic Test Method. The test assembly shall be subjected to hydrostatic pressure of at least P_T for not less than 1 hr with no leakage or separation of joints.

(1) For thermoplastics, P_T shall be determined in accordance with Eq. (27):

[5] Titles of referenced standards and specifications are listed in Table A326.1, except ASTM D 1599 and ASTM D 2855, Practice for Making Solvent-Cemented Joints with PVC Pipe and Fittings.

--`,,```,,,,````-`-`,,`,,`,`,,`---

Copyright ASME International
Provided by IHS under license with ASME
No reproduction or networking permitted without license from IHS Not for Resale

$$P_T = 0.80\overline{T}\left(\frac{(S_S + S_H)}{D - \overline{T}}\right) \quad (27)$$

where

D = outside diameter of pipe
S_H = mean long term hydrostatic strength (LTHS) in accordance with ASTM D 2837. Use twice the 23°C (73°F) HDB design stress from Table B-1 if listed, or use manufacturer's data.
S_S = mean short term burst stress in accordance with ASTM D 1599,[5] from Table B-1 if listed, otherwise from manufacturer's data
$\overline{T}$ = nominal thickness of pipe

(2) For RTR (laminated and filament-wound) and RPM, P_T shall be three times the manufacturer's allowable pressure for the components being joined.

(3) The test shall be conducted so that the joint is loaded in both the circumferential and longitudinal directions.

A328.2.6 Performance Requalification. Renewal of a bonding performance qualification is required when:

(a) a bonder or bonding operator has not used the specific bonding process for a period of 6 months or more, or

(b) there is specific reason to question the individual's ability to make bonds that meet the BPS

A328.3 Bonding Materials and Equipment

A328.3.1 Materials. Bonding materials that have deteriorated by exposure to air or prolonged storage, or will not spread smoothly, shall not be used in making joints.

A328.3.2 Equipment. Fixtures and tools used in making joints shall be in such condition as to perform their functions satisfactorily.

A328.4 Preparation for Bonding

Preparation shall be defined in the BPS and shall specify such requirements as

(a) cutting
(b) cleaning
(c) preheat
(d) end preparation
(e) fit-up

A328.5 Bonding Requirements

A328.5.1 General

(a) Production joints shall be made only in accordance with a written bonding procedure specification (BPS) that has been qualified in accordance with para. A328.2. Manufacturers of piping materials, bonding materials, and bonding equipment should be consulted in the preparation of the BPS.

(b) Production joints shall be made only by qualified bonders or bonding operators who have appropriate training or experience in the use of the applicable BPS and have satisfactorily passed a performance qualification test that was performed in accordance with a qualified BPS.

(c) Each qualified bonder and bonding operator shall be assigned an identification symbol. Unless otherwise specified in the engineering design, each pressure containing bond or adjacent area shall be stenciled or otherwise suitably marked with the identification symbol of the bonder or bonding operator. Identification stamping shall not be used and any marking paint or ink shall not be detrimental to the piping material. In lieu of marking the bond, appropriate records may be filed.

(d) Qualification in one BPS does not qualify a bonder or bonding operator for any other bonding procedure.

(e) Longitudinal joints are not covered in para. A328.

A328.5.2 Hot Gas Welded Joints in Thermoplastic Piping [5]

(a) Preparation. Surfaces to be hot gas welded together shall be cleaned of any foreign material. For butt welds, the joining edges should be beveled at 20 deg to 40 deg with 1 mm ($\frac{1}{32}$ in.) root face and root gap.

(b) Procedure. Joints shall be made in accordance with the qualified BPS.

(c) Branch Connections. A fabricated branch connection shall be made by inserting the branch pipe in the hole in the run pipe. Dimensions of the joint shall conform to Fig. 328.4.4 sketch (c). The hole in the run pipe shall be beveled at 45 deg. Alternatively, a fabricated branch connection shall be made using a manufactured full reinforcement saddle with integral socket.

A328.5.3 Solvent Cemented Joints in Thermoplastic Piping [5]

(a) Preparation. Thermoplastic pipe and fitting surfaces shall be prepared in accordance with ASTM D 2855 for PVC, ASTM F 493 for CPVC, and ASTM D 2235 for ABS. A dry fit test of each joint is required before solvent cementing. The pipe shall enter the fitting socket between $\frac{1}{3}$ and $\frac{2}{3}$ of the full socket depth when assembled by hand. (04)

(b) Procedure. Joints shall be made in accordance with the qualified BPS. ASTM D 2855 provides a suitable basis for development of such a procedure. Solvent cements for PVC, CPVC, and ABS shall conform to ASTM D 2564, D 2846, and D 2235, respectively. Application of cement to both surfaces to be joined and assembly of these surfaces shall produce a continuous bond between them with visual evidence of cement at least flush with the outer end of the fitting bore around the entire joint perimeter. See Fig. A328.5.3.

(c) Branch Connections. A fabricated branch connection shall be made using a manufactured full reinforcement saddle with integral branch socket. The reinforcement saddle shall be solvent cemented to the run pipe over its entire contact surface.

Copyright ASME International
Provided by IHS under license with ASME
No reproduction or networking permitted without license from IHS
Not for Resale

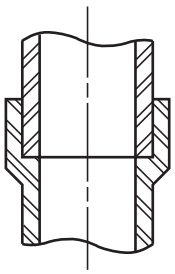

Socket Joint

FIG. A328.5.3 THERMOPLASTIC SOLVENT CEMENTED JOINT

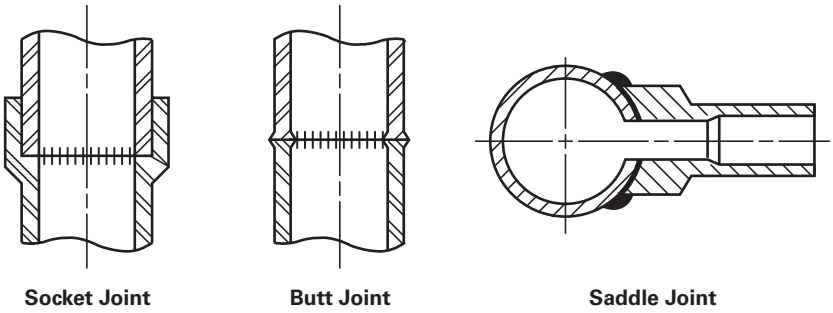

FIG. A328.5.4 THERMOPLASTIC HEAT FUSION JOINTS

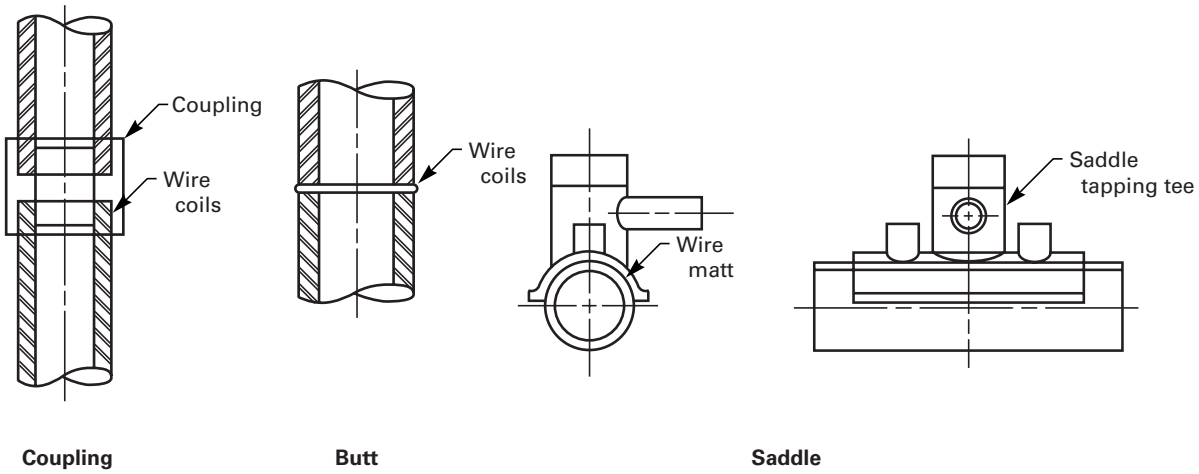

FIG. A328.5.5 THERMOPLASTIC ELECTROFUSION JOINTS

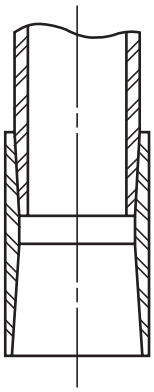

FIG. A328.5.6 FULLY TAPERED THERMOSETTING ADHESIVE JOINT

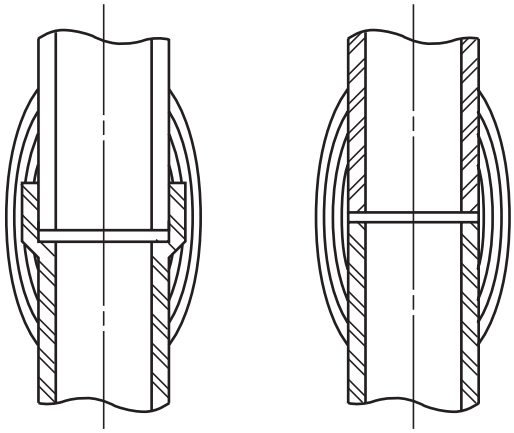

FIG. A328.5.7 THERMOSETTING WRAPPED JOINTS

Fig. A328.5 Typical Plastic Piping Joints

Copyright ASME International
Provided by IHS under license with ASME
No reproduction or networking permitted without license from IHS
Not for Resale

A328.5.4 Heat Fusion Joints in Thermoplastic Piping [5]

(a) Preparation. Surfaces to be heat fused together shall be cleaned of all foreign material.

(b) Procedure. Joints shall be made in accordance with the qualified BPS. The general procedures in ASTM D 2657, Techniques I — Socket Fusion, II — Butt Fusion, and III — Saddle Fusion, provide a suitable basis for development of such a procedure. Uniform heating of both surfaces to be joined and assembly of these surfaces shall produce a continuous homogeneous bond between them and shall produce a small fillet of fused material at the outer limits of the joint. See Fig. A328.5.4 for typical heat fusion joints. Fixtures shall be used to align components when joints are made.

(c) Branch Connections. A fabricated branch connection is permitted only where molded fittings are unavailable.

A328.5.5 Electrofusion Joints in Thermoplastic Piping

(a) Preparation. Surfaces to be heat fused together shall be cleaned of all foreign material.

(b) Procedure. Joints shall be made in accordance with the qualified BPS. The general procedures in ASTM F 1290, Technique I — Coupling Procedure and Technique II — Saddle Procedure provide a suitable basis for the development of such a procedure. See Fig. A328.5.5.

A328.5.6 Adhesive Joints in RTR and RPM Piping

(a) Procedure. Joints shall be made in accordance with the qualified BPS. Application of adhesive to the surfaces to be joined and assembly of these surfaces shall produce a continuous bond between them and shall seal over all cuts to protect the reinforcement from the service fluid. See Fig. A328.5.6.

(b) Branch Connections. A fabricated branch connection shall be made using a manufactured full reinforcement saddle having a socket or integral length of branch pipe suitable for a nozzle or coupling. The hole in the run pipe shall be made with a hole saw; the cut edges of the hole shall be sealed with adhesive at the time the saddle is bonded to the run pipe.

A328.5.7 Butt-and-Wrapped Joints in RTR and RPM Piping [5]

(a) Procedure. Joints shall be made in accordance with the qualified BPS. Application of plies of reinforcement saturated with catalyzed resin to the surfaces to be joined shall produce a continuous structure with them. Cuts shall be sealed to protect the reinforcement from the service fluid. See Fig. A328.5.7.

(b) Branch Connections. For a fabricated branch connection made by inserting the branch pipe into a hole in the run pipe, the hole shall be made with a hole saw.

A328.6 Bonding Repair

Defective material, joints, and other workmanship that fails to meet the requirements of this Code and of the engineering design shall be repaired or replaced. See also para. 341.3.3.

A328.7 Seal Bonds

If threaded joints are to be seal bonded in accordance with para. A311.2.2, the work shall be done by qualified bonders and all exposed threads shall be covered by the seal bond.

A329 FABRICATION OF PIPING LINED WITH NONMETALS

A329.1 Welding of Metallic Piping

A329.1.1 General

(a) Paragraph A329.1 applies only to welding subassemblies of metallic piping that have previously been lined with nonmetals.

(b) Welding which conforms to para. A329.1 may be used in accordance with para. A318.3.1.

A329.1.2 Specific Welding Requirements. Welding shall conform to the requirements of para. 328 and the following additional requirements.

(a) Modifications made in preparation for welding to suit manufacturer's recommendations shall be specified in the engineering design.

(b) Welding shall be performed so as to maintain the continuity of the lining and its serviceability.

(c) If a lining has been damaged, it shall be repaired or replaced.

(d) Qualification to one WPS for a specific lining material does not qualify a welder or welding operator for any other welding procedure involving different lining materials.

A329.2 Flaring of Nonmetallic Linings

A329.2.1 General

(a) Paragraph A329.2 applies only to the flaring of linings in pipe that has previously been lined with nonmetals.

(b) Flaring which conforms to para. A329.2 may be used in accordance with para. A318.3.2.

(c) Flaring shall be performed only in accordance with a written flaring procedure specification, and only by qualified operators who have appropriate training or experience in the use of the applicable flaring procedure specification.

A332 BENDING AND FORMING

A332.1 General

Paragraph 332.1 applies in its entirety.

A332.2 Bending

Paragraph 332.2 applies, except para. 332.2.2.

Copyright ASME International
Provided by IHS under license with ASME
No reproduction or networking permitted without license from IHS
Not for Resale

A332.3 Forming

Paragraph 332.3 applies, except for heat treatment.

A334 JOINING NONPLASTIC PIPING

A334.1 Borosilicate Glass Piping

Short unflanged pieces used to correct for differences between fabrication drawings and field dimensions may be cut to length and finished in the field.

A334.2 Repair of Defects

Defective material, joints, and other workmanship in nonplastic piping that fail to meet the requirements of para. A334 or of the engineering design shall be repaired or replaced.

Completed repairs and replacements shall be examined, subject to the same limitations on imperfections as the original work.

A335 ASSEMBLY AND ERECTION

A335.1 Alignment

Paragraph 335.1 applies in its entirety.

A335.2 Flanged and Mechanical Joints

Paragraph 335.2 applies in its entirety.

A335.2.5 Nonmetallic Bolted Joints

(a) Bolted joints in nonmetallic piping may be assembled with any combination of flange material and flange facings, except that when other than flat face flanges and full face gaskets are used:

(1) consideration shall be given to the strength of the flanges, and to sustained loads, displacement strains, and occasional loads described in paras. A302.3.4 and A302.3.5; and

(2) an appropriate bolt-up sequence shall be specified.

(b) Appropriate limits shall be specified for bolt-up torque, and those limits shall not be exceeded.

(c) Flat washers shall be used under bolt heads and nuts.

A335.2.6 Metallic Piping Lined With Nonmetals. In assembling mechanical joints in metallic piping lined with nonmetals, consideration shall be given to means for maintaining electrical continuity between pipe sections, where static sparking could cause ignition of flammable vapors. See Appendix F, para. FA323.4(a).

A335.3 Threaded Joints

Paragraph 335.3 applies except for para. 335.3.2. See para. A335.3.2.

A335.3.2 Joints for Seal Bonding. A threaded joint to be seal bonded shall be made up without thread compound. A joint containing thread compound which leaks during leak testing may be seal bonded in accordance with para. A328.6, provided all compound is removed from exposed threads.

A335.3.4 General, Nonmetallic Piping. Either strap wrenches or other full circumference wrenches shall be used to tighten threaded pipe joints. Tools and other devices used to hold or apply forces to the pipe shall be such that the pipe surface is not scored or deeply scratched.

A335.3.5 RTR and RPM Piping. In assembling threaded joints in RTR and RPM piping, where threads may be exposed to fluids which can attack the reinforcing material, threads shall be coated with sufficient resin to cover the threads and completely fill the clearance between the pipe and the fitting.

A335.4 Tubing Joints

A335.4.1 Flared Joints in Thermoplastic Tubing. In addition to preparation in accordance with para. 335.4.1, flared joints shall be made in accordance with ASTM D 3140, Flared Joints for Polyolefins.

A335.4.2 Flareless and Compression Tubing Joints. Paragraph 335.4.2 applies.

A335.5 Caulked Joints

Paragraph 335.5 applies.

A335.6 Special Joints

Paragraph 335.6 applies, except that expanded joints are not permitted.

A335.6.3 Flexible Elastomeric Sealed Joints. Assembly of flexible elastomeric sealed joints shall be in accordance with the manufacturer's recommendations and the following.

(a) Seal and bearing surfaces shall be free from injurious imperfections.

(b) Any lubricant used to facilitate joint assembly shall be compatible with the joint components and the intended service.

(c) Proper joint clearances and piping restraints (if not integral in the joint design) shall be provided to prevent joint separation when expansion can occur due to thermal and/or pressure effects.

A335.8 Assembly of Brittle Piping

Care shall be used to avoid scratching of brittle nonmetallic piping in handling and supporting. Any scratched or chipped components shall be replaced. Care shall be used in handling glass-lined and cement-lined steel pipe because the lining can be injured or broken by blows which do not dent or break the pipe.

A335.8.1 Borosilicate Glass Piping. In addition to the precaution in para. A335.8, borosilicate glass piping

Copyright ASME International
Provided by IHS under license with ASME
No reproduction or networking permitted without license from IHS
Not for Resale

components shall be protected from weld spatter. Any component so damaged shall be replaced. Flanges and cushion inserts shall be carefully fitted and aligned to pipe, fitting, and valve ends. Gaskets shall be of the construction recommended for the joint. Installation and torquing of bolts shall be in accordance with the manufacturer's recommendations.

A335.9 Cleaning of Piping

See Appendix F, para. F335.9.

PART 10
INSPECTION, EXAMINATION, AND TESTING

A340 INSPECTION

Paragraph 340 applies in its entirety.

A341 EXAMINATION

A341.1 General

Paragraph 341.1 applies.

A341.2 Responsibility for Examination

Paragraph 341.2 applies in its entirety.

A341.3 Examination Requirements

A341.3.1 Responsibility for Examination. Paragraph 341.3.1 applies, except for (a) and (b), which apply only for metals.

A341.3.2 Acceptance Criteria. Acceptance criteria shall be as stated in the engineering design and shall at least meet the applicable requirements for bonds in Table A341.3.2 and requirements elsewhere in the Code.

A341.3.3 Defective Components and Workmanship. Paragraph 341.3.3 applies in its entirety.

A341.3.4 Progressive Sampling for Examination. Paragraph 341.3.4 applies in its entirety.

A341.4 Extent of Required Examination

A341.4.1 Examination Normally Required. Piping in Normal Fluid Service shall be examined to the extent specified herein or to any greater extent specified in the engineering design. Acceptance criteria are as stated in para. A341.3.2 unless otherwise specified.

(a) Visual Examination. At least the following shall be examined in accordance with para. 344.2:

(1) materials and components in accordance with para. 341.4.1(a)(1).

(2) at least 5% of fabrication. For bonds, each type of bond made by each bonder and bonding operator shall be represented.

(3) 100% of fabrication for bonds other than circumferential, except those in components made in accordance with a listed specification.

(4) assembly and erection of piping in accordance with paras. 341.4.1(a)(4), (5), and (6).

(b) Other Examination. Not less than 5% of all bonded joints shall be examined by in-process examination in accordance with para. 344.7, the joints to be examined being selected to ensure that the work of each bonder and bonding operator making the production joints is examined.

(c) Certifications and Records. Paragraph 341.4.1(c) applies.

A341.4.2 Examination — Category D Fluid Service. Piping and piping elements for Category D Fluid Service as designated in the engineering design shall be visually examined to the extent necessary to satisfy the examiner that components, materials, and workmanship conform to the requirements of this Code and the engineering design.

A341.5 Supplementary Examination

A341.5.1 General. Any applicable method of examination described in para. 344 may be specified by the engineering design to supplement the examination required by para. A341.4. The extent of supplementary examination to be performed and any acceptance criteria that differ from those in para. A341.3.2 shall be specified in the engineering design.

A341.5.2 Examinations to Resolve Uncertainty. Paragraph 341.5.3 applies.

A342 EXAMINATION PERSONNEL

Paragraph 342 applies in its entirety.

A343 EXAMINATION PROCEDURES

Paragraph 343 applies in its entirety.

A344 TYPES OF EXAMINATION

A344.1 General

Paragraph 344.1 applies in its entirety.

A344.2 Visual Examination

Paragraph 344.2 applies in its entirety.

A344.5 Radiographic Examination

Radiographic examination may be used in accordance with para. 344.1.2.

A344.6 Ultrasonic Examination

Ultrasonic examination may be used in accordance with para. 344.1.2.

Copyright ASME International
Provided by IHS under license with ASME
No reproduction or networking permitted without license from IHS
Not for Resale

Table A341.3.2 Acceptance Criteria for Bonds

Kind of Imperfection	Thermoplastic			RTR and RPM [Note (1)]
	Hot Gas Welded	Solvent Cemented	Heat Fusion	Adhesive Cemented
Cracks	None permitted	Not applicable	Not applicable	Not applicable
Unfilled areas in joint	None permitted	None permitted	None permitted	None permitted
Unbonded areas in joint	Not applicable	None permitted	None permitted	None permitted
Inclusions of charred material	None permitted	Not applicable	Not applicable	Not applicable
Unfused filler material inclusions	None permitted	Not applicable	Not applicable	Not applicable
Protrusion of material into pipe bore, % of pipe wall thickness	Not applicable	Cement, 50%	Fused material, 25%	Adhesive, 25%

NOTE:
(1) RTR = reinforced thermosetting resin; RPM = reinforced plastic mortar.

A344.7 In-Process Examination

Paragraph 344.7 applies in its entirety.

A345 TESTING

A345.1 Required Leak Test

(a) Prior to initial operation, each piping system shall be tested to ensure tightness. The test shall be a hydrostatic leak test in accordance with para. A345.4, except as provided herein.

(b) Paragraphs 345.1(a) and (b) apply.

A345.2 General Requirements for Leak Test

Requirements in para. A345.2 apply to more than one type of leak test.

A345.2.1 Limitations on Pressure. Paragraphs 345.2.1(b) and (c) apply.

A345.2.2 Other Test Requirements

(a) Paragraph 345.2.2(a) applies.

(b) The possibility of brittle fracture shall be considered when conducting leak tests on brittle materials or at low temperature.

(c) Paragraphs 345.2.3 through 345.2.7 apply.

A345.3 Preparation for Leak Test

Paragraph 345.3 applies in its entirety, considering bonds in place of welds, and excluding expansion joints.

A345.4 Hydrostatic Leak Test

A345.4.1 Test Fluid. Paragraph 345.4.1 applies.

A345.4.2 Test Pressure

(a) Nonmetallic Piping. Except as provided in para. 345.4.3(b), the hydrostatic test pressure at any point in a nonmetallic piping system shall be not less than 1.5 times the design pressure, but shall not exceed 1.5 times the maximum rated pressure of the lowest-rated component in the system.

(b) Thermoplastic Piping. For piping systems in which the design temperature is above the test temperature, para. 345.4.2(b) applies, except that S and S_T shall be from Table B-1 instead of A-1.

(c) Metallic Piping with Nonmetallic Lining. Paragraph 345.4.2 applies.

A345.4.3 Hydrostatic Test of Piping With Vessels as a System. Paragraph 345.4.3 applies.

A345.5 Pneumatic Leak Test

A345.5.1 Precautions. In addition to the requirements of para. 345.5.1, a pneumatic test of nonmetallic piping is permitted only with the owner's approval, and precautions in Appendix F, para. FA323.4 should be considered.

A345.5.2 Other Requirements

(a) Paragraphs 345.5.2 through 345.5.5 apply.

(b) PVC and CPVC piping shall not be pneumatically tested.

A345.6 Hydrostatic-Pneumatic Leak Test

If a combined hydrostatic-pneumatic leak test is used, the requirements of para. A345.5 shall be met, and the

Copyright ASME International
Provided by IHS under license with ASME
No reproduction or networking permitted without license from IHS Not for Resale

pressure in the liquid-filled part of the piping shall not exceed the values calculated in accordance with para. A345.4.2 or 345.4.2, as applicable.

A345.7 Initial Service Leak Test

Paragraph 345.7 applies in its entirety for Category D Fluid Service only.

A345.8 Sensitive Leak Test

Paragraph 345.8 applies.

A346 RECORDS

Paragraph 346 applies in its entirety.

Copyright ASME International
Provided by IHS under license with ASME
No reproduction or networking permitted without license from IHS Not for Resale

Chapter VIII
Piping for Category M Fluid Service

M300 GENERAL STATEMENTS

(a) Chapter VIII pertains to piping designated by the owner as being in Category M Fluid Service. See also Appendix M.

(b) The organization, content, and paragraph designations of this Chapter correspond to those of the base Code (Chapters I through VI) and Chapter VII. The prefix M is used.

(c) Provisions and requirements of the base Code and Chapter VII apply only as stated in this Chapter.

(d) Consideration shall be given to the possible need for engineered safeguards (see Appendix G, para. G300.3) in addition to the safeguards already provided (paras. G300.1 and G300.2).

(e) This Chapter makes no provision for piping to be used under severe cyclic conditions. The occurrence of such conditions can ordinarily be circumvented by piping layout, component selection, and other means. If this is not feasible, the engineering design shall specify any necessary provisions in accordance with para. 300(c)(5).

(f) Chapter I applies in its entirety.

PART 1
CONDITIONS AND CRITERIA

M301 DESIGN CONDITIONS

Paragraph 301 applies in its entirety, with the exceptions of paras. 301.3 and 301.5. See paras. M301.3 and M301.5.

M301.3 Design Temperature, Metallic Piping

Use of any temperature other than the fluid temperature as the design temperature shall be substantiated by heat transfer calculations confirmed by tests or by experimental measurements.

M301.5 Dynamic Effects

Paragraph 301.5 applies with the exception of paras. 301.5.1 and 301.5.4. See paras. M301.5.1 and M301.5.4.

M301.5.1 Impact. Design, layout, and operation of piping shall be conducted so as to minimize impact and shock loads. In the event that such loadings are unavoidable, para. 301.5.1 applies.

M301.5.4 Vibration. Suitable dynamic analysis, such as computer simulation, shall be made where necessary to avoid or minimize conditions which lead to detrimental vibration, pulsation, or resonance effects in the piping.

M302 DESIGN CRITERIA

M302.1 General

Paragraph M302 pertains to pressure-temperature ratings, stress criteria, design allowances, and minimum design values, together with permissible variations of these factors as applied to piping design.

Paragraph 302 applies in its entirety, with the exception of paras. 302.2 and 302.3. See paras. M302.2 and M302.3.

M302.2 Pressure-Temperature Design Criteria

Paragraph 302.2 applies in its entirety, with the exception of paras. 302.2.4 and 302.2.5. See paras. M302.2.4 and M302.2.5.

M302.2.4 Allowance for Pressure and Temperature Variations, Metallic Piping. Use of allowances in para. 302.2.4 is not permitted. Design temperature and pressure shall be based on coincident pressure-temperature conditions requiring the greatest wall thickness or the highest component rating.

M302.2.5 Ratings at Junction of Different Services, Metallic Piping. When two services that operate at different pressure-temperature conditions are connected, the valve segregating the services shall be rated for the more severe service condition.

M302.3 Allowable Stresses and Other Stress Limits for Metallic Piping

Paragraph 302.3 applies in its entirety, with the exception of para. 302.3.2. See para. M302.3.2.

M302.3.2 Bases for Allowable Stresses. The designer shall fully document the basis for using any stress limit not in accordance with the stress Tables in Appendix A.

M302.4 Allowances

Paragraph 302.4 applies in its entirety.

Copyright ASME International
Provided by IHS under license with ASME
No reproduction or networking permitted without license from IHS
Not for Resale

PART 2
PRESSURE DESIGN OF METALLIC PIPING COMPONENTS

M303 GENERAL

Paragraph 303 applies in its entirety.

M304 PRESSURE DESIGN OF METALLIC COMPONENTS

Paragraph 304 applies in its entirety.

PART 3
FLUID SERVICE REQUIREMENTS FOR METALLIC PIPING COMPONENTS

M305 PIPE

M305.1 General

Listed pipe may be used in accordance with para. M305.2. Unlisted pipe may be used only as provided in para. 302.2.3.

M305.2 Specific Requirements for Metallic Pipe

Pipe listed in para. 305.2.2 shall not be used. The provision for severe cyclic conditions in para. 305.2.3 does not apply [see para. M300(e)].

M306 METALLIC FITTINGS, BENDS, MITERS, LAPS, AND BRANCH CONNECTIONS

General. Fittings, bends, miters, laps, and branch connections may be used in accordance with paras. M306.1 through M306.6. Pipe and other materials used in such components shall be suitable for the manufacturing process and the fluid service.

M306.1 Pipe Fittings

Paragraph 306.1 applies in its entirety, with the exception of para. 306.1.3. See para. M306.1.3 below. The provision for severe cyclic conditions in para. 306.1.4 does not apply [see para. M300(e)].

M306.1.3 Specific Fittings. The following shall not be used:

(a) fittings conforming to MSS SP-43 and MSS SP-119

(b) proprietary "Type C" lap-joint stub-end butt welding fittings

M306.2 Pipe Bends

Paragraph 306.2 applies, except that bends in accordance with para. 306.2.2 shall not be used and para. 306.2.3 does not apply [see para. M300(e)].

M306.3 Miter Bends

A miter bend shall conform to para. 306.3.1 and shall not make a change in direction at a single joint (angle α in Fig. 304.2.3) greater than 22.5 deg. Paragraph 306.3.3 does not apply [see para. M300(e)].

M306.4 Fabricated or Flared Laps

M306.4.1 General. The following requirements do not apply to fittings conforming to para. M306.1, nor to laps integrally forged on pipe ends. Paragraph 306.4.1 applies.

M306.4.2 Flared Laps. A flared lap shall meet the requirements of para. 306.4.2. In addition,

(a) pipe size shall be ≤ DN 100 (NPS 4), with wall thickness before flaring ≥ the value of T for Schedule 10S

(b) pressure-temperature rating shall be ≤ that of an ASME B16.5 PN 20 (Class 150) Group 1.1 flange

(c) service temperature shall be ≤ 204°C (400°F)

M306.5 Fabricated Branch Connections

The following requirements do not apply to fittings conforming to para. M306.1. Paragraph 306.5.1 applies, with the following exceptions:

(a) Of the methods listed in para. 304.3.1(a), the one in subpara. (3) may be used only if those in (1) and (2) are unavailable.

(b) Of the branch connections described in paras. 304.3.2(b) and (c), those having threaded outlets are permitted only in accordance with para. M314 and those having socket welding outlets are permitted only in accordance with para. M311.2.

M306.6 Closures

The following requirements do not apply to blind flanges or to fittings conforming to para. M306.1. Of the closures described in para. 304.4, flat closures in accordance with the BPV Code, Section VIII, Division 1, UG-34 and UW-13, and conical closures without transition knuckles [UG-32(g) and UG-33(f)], may be used only if others are not available. The requirements in M306.5 apply to openings in closures [see also para. 304.4.2(b)].

M307 METALLIC VALVES AND SPECIALTY COMPONENTS

The following requirements for valves shall also be met as applicable by other pressure containing piping components, such as strainers and separators. See also Appendix F, para. F307.

M307.1 General

Paragraph 307.1 applies, subject to the requirements in para. M307.2.

Copyright ASME International
Provided by IHS under license with ASME
No reproduction or networking permitted without license from IHS
Not for Resale

M307.2 Specific Requirements

(a) Valves having threaded bonnet joints (other than union joints) shall not be used.

(b) Only metallic valves conforming to the following requirements may be used.

(1) Special consideration shall be given to valve design to prevent stem leakage to the environment.

(2) Bonnet or cover plate closures shall be: flanged, secured by at least four bolts with gasketing conforming to para. 308.4; or proprietary, attached by bolts, lugs, or other substantial means, and having a gasket design that increases gasket compression as fluid pressure increases; or secured with a full penetration weld made in accordance with para. M311; or secured by a straight thread sufficient for mechanical strength, a metal-to-metal seat, and a seal weld made in accordance with para. M311, all acting in series.

(3) Body joints, other than bonnet or cover plate joints, shall conform to para. M307.2(b)(2).

M308 FLANGES, BLANKS, FLANGE FACINGS, AND GASKETS

Paragraph 308.1 applies in its entirety.

M308.2 Specific Requirements for Metallic Flanges

Paragraph 308.2.4 does not apply [see para. M300(e)]. The following shall not be used:

(a) single-welded slip-on flanges

(b) expanded-joint flanges

(c) slip-on flanges used as lapped flanges unless the requirements in para. 308.2.1(c) are met

(d) threaded metallic flanges, except those employing lens rings or similar gaskets and those used in lined pipe where the liner extends over the gasket face

M308.3 Flange Facings

Paragraph 308.3 applies.

M308.4 Gaskets

Paragraph 308.4 applies.

M308.5 Blanks

All blanks shall be marked with material, rating, and size.

M309 BOLTING

Paragraph 309 applies, except for para. 309.2.4 [see para. M300(e)].

PART 4
FLUID SERVICE REQUIREMENTS FOR METALLIC PIPING JOINTS

M310 METALLIC PIPING, GENERAL

Paragraph 310 applies in its entirety.

M311 WELDED JOINTS IN METALLIC PIPING

Welded joints may be made in any metal for which it is possible to qualify welding procedures, welders, and welding operators in accordance with para. M328.

M311.1 General

Paragraph 311.1 applies with the following exceptions.

(a) Split backing rings shall not be used.

(b) Socket welded joints greater than DN 50 (NPS 2) are not permitted.

(c) Examination shall be in accordance with para. M341.4.

M311.2 Specific Requirements

Paragraphs 311.2.3(a); 311.2.4(a), (b), and (d); 311.2.5; and 311.2.6 apply.

M312 FLANGED JOINTS IN METALLIC PIPING

Paragraph 312 applies in its entirety.

M313 EXPANDED JOINTS IN METALLIC PIPING

Expanded joints shall not be used.

M314 THREADED JOINTS IN METALLIC PIPING

M314.1 General

Paragraphs 314.1(a), (b), and (c) apply.

M314.2 Specific Requirements

M314.2.1 Taper-Threaded Joints. Paragraph 314.2.1 applies except that only components suitable for Normal Fluid Service in sizes $8 \le DN \le 25$ ($\frac{1}{4} \le NPS \le 1$) are permitted (see Table 314.2.1). Sizes smaller than DN 20 (NPS $\frac{3}{4}$) shall be safeguarded (see Appendix G).

M314.2.2 Straight-Threaded Joints. Paragraph 314.2.2 applies. In addition, components shall have adequate mechanical strength and the joint shall have a confined seating surface not subject to relative rotation as or after the joint is tightened. [See Fig. 335.3.3 sketches (b) and (c) for acceptable construction.]

M315 TUBING JOINTS IN METALLIC PIPING

Paragraph 315 applies, except for para. 315.2(b).

Copyright ASME International
Provided by IHS under license with ASME
No reproduction or networking permitted without license from IHS
Not for Resale

M316 CAULKED JOINTS

Caulked joints shall not be used.

M317 SOLDERED AND BRAZED JOINTS

Soldered, brazed, and braze welded joints shall not be used.

M318 SPECIAL JOINTS IN METALLIC PIPING

Paragraph 318 applies, with the exception that adhesive joints and bell type joints shall not be used.

PART 5
FLEXIBILITY AND SUPPORT OF METALLIC PIPING

M319 FLEXIBILITY OF METALLIC PIPING

Paragraph 319 applies, with the exception that the simplified rules in para. 319.4.1(c) do not apply.

M321 PIPING SUPPORT

Paragraph 321 applies, except that supporting elements shall be of listed material.

PART 6
SYSTEMS

M322 SPECIFIC PIPING SYSTEMS

M322.3 Instrument Piping

Paragraph 322.3 applies, with the exception that, for signal lines in contact with process fluids and process temperature–pressure conditions

(a) tubing shall be not larger than 16 mm ($\frac{5}{8}$ in.) O.D. and shall be suitable for the service

(b) an accessible block valve shall be provided to isolate the tubing from the pipeline

(c) joining methods shall conform to the requirements of paras. 315.1 and 315.2

M322.6 Pressure Relieving Systems

Paragraph 322.6 applies, except for para. 322.6.3. See para. M322.6.3.

M322.6.3 Overpressure Protection. For metallic piping, the design pressure may be exceeded by no more than 10% during operation of a pressure relieving system.

PART 7
METALLIC MATERIALS

M323 GENERAL REQUIREMENTS

M323.1 Materials and Specifications

Paragraphs 323.1.1 and 323.1.2 apply. See paras. M323.1.3 and M323.1.4.

M323.1.3 Unknown Materials. Materials of unknown specification shall not be used.

M323.1.4 Reclaimed Metallic Materials. Reclaimed materials may be used when the material certification records are available for the specific materials employed, and the designer is assured that the material is sound and free from harmful defects.

M323.2 Temperature Limitations

Paragraph 323.2 applies with the exception that, in regard to lower temperature limits, the relaxation of minimum temperature limits stated in Note (3) of Table 323.2.2 is not permitted.

M323.3 Impact Testing Methods and Acceptance Criteria

Paragraph 323.3 applies in its entirety.

M323.4 Fluid Service Requirements for Metallic Materials

Paragraph 323.4.1 applies.

M323.4.2 Specific Requirements. Paragraph 323.4.2 applies, except that cast irons other than ductile iron shall not be used for pressure-containing parts, and lead and tin shall be used only as linings.

M323.4.3 Metallic Cladding and Lining Materials. In addition to the requirements of para. 323.4.3, where materials covered in paras. 323.4.2(c)(2) and 323.4.3 are used as cladding or lining in which the cladding or lining also serves as a gasket or as part of the flange facing, consideration shall be given to the design of the flanged joint to prevent leakage to the environment.

M323.5 Deterioration of Materials in Service

Paragraph 323.5 applies in its entirety.

M325 MATERIALS — MISCELLANEOUS

M325.1 Joining and Auxiliary Materials

In applying para. 325, materials such as solvents, brazes, and solders shall not be used. Nonmetallic materials used as gaskets and packing materials shall be suitable for the fluid service.

Copyright ASME International
Provided by IHS under license with ASME
No reproduction or networking permitted without license from IHS
Not for Resale

PART 8
STANDARDS FOR PIPING COMPONENTS

M326 DIMENSIONS AND RATINGS OF COMPONENTS

Paragraph 326.1.3 applies.

M326.1 Dimensional Requirements

M326.1.1 Listed Piping Components. Except for prohibitions and restrictions stated elsewhere in Chapter VIII, components made in accordance with standards and specifications listed in Table 326.1 may be used in Category M service.

M326.1.2 Unlisted Piping Components. Dimensions of unlisted components shall be governed by requirements in paras. 303 and 304.

M326.2 Ratings of Components

Paragraph 326.2 applies in its entirety.

M326.3 Reference Documents

Paragraph 326.3 applies in its entirety.

PART 9
FABRICATION, ASSEMBLY, AND ERECTION OF METALLIC PIPING

M327 GENERAL

Metallic piping materials and components are prepared for assembly and erection by one or more of the fabrication processes in paras. M328, M330, M331, and M332. When any of these processes is used in assembly and erection, requirements are the same as for fabrication.

M328 WELDING OF METALS

Welding shall be in accordance with paras. M311.1 and 328, except see para. M328.3.

M328.3 Welding Materials

Paragraph 328.3 applies in its entirety, except that split backing rings shall not be used, and removable backing rings and consumable inserts may be used only where their suitability has been demonstrated by procedure qualification.

M330 PREHEATING OF METALS

Paragraph 330 applies in its entirety.

M331 HEAT TREATMENT OF METALS

Paragraph 331 applies in its entirety, with the exception that no requirements less stringent than those of Table 331.1.1 shall be specified.

M332 BENDING AND FORMING OF METALS

Paragraph 332 applies in its entirety, except that bending which conforms to para. 332.2.3 is not permitted.

M335 ASSEMBLY AND ERECTION OF METALLIC PIPING

M335.1 General

M335.1.1 Alignment. In addition to the requirements of para. 335.1.1, any bending or forming required for alignment and fit-up shall be heat treated if required by para. 332.4.

M335.2 Flanged Joints

Paragraph 335.2 applies in its entirety.

M335.3 Threaded Joints

Paragraphs 335.3.1 and 335.3.2 apply. See paras. M335.3.3 and M335.3.4.

M335.3.3 Straight-Threaded Joints. The requirements of para. 335.3.3 are subject to the limitations in para. M322.

M335.3.4 Condition of Threads. Taper-threaded components and threaded ends permitted under para. M314.2.1 shall be examined before assembly for cleanliness and continuity of threads and shall be rejected if not in conformance with ASME B1.20.1 or other applicable standards.

M335.4 Tubing Joints

M335.4.1 Flared Tubing Joints. The requirements of para. 335.4.1 apply; however, see para. M322 for limitations associated with specific piping systems.

M335.4.2 Flareless and Compression Tubing Joints. The requirements of para. 335.4.2 apply; however, see para. M322 for limitations associated with specific piping systems.

M335.6 Special Joints

Special joints shall be in accordance with paras. M318 and 335.6.1.

Copyright ASME International
Provided by IHS under license with ASME
No reproduction or networking permitted without license from IHS Not for Resale

M335.9 Cleaning of Piping

See Appendix F, para. F335.9.

PART 10
INSPECTION, EXAMINATION, TESTING, AND RECORDS OF METALLIC PIPING

M340 INSPECTION

Paragraph 340 applies in its entirety.

M341 EXAMINATION

Paragraphs 341.1, 341.2, 341.3, and 341.5 apply in their entirety. See para. M341.4.

M341.4 Extent of Required Examination

Paragraph 341.4.1 applies with the following exceptions:

(a) Visual Examination

(1) All fabrication shall be examined.

(2) All threaded, bolted, and other mechanical joints shall be examined.

(b) Other Examination

(1) The random radiography/ultrasonic examination requirements of para. 341.4.1(b)(1) apply except that at least 20% of circumferential butt and miter welds and of fabricated lap and branch connection welds comparable to those shown in Figs. 328.5.4E and 328.5.5 sketches (d) and (e) shall be examined.

(2) The in-process examination alternative permitted in para. 341.4.1(b)(1) may be specified on a weld-for-weld basis in the engineering design or by the Inspector. It shall be supplemented by appropriate nondestructive examination.

M342 EXAMINATION PERSONNEL

Paragraph 342 applies.

M343 EXAMINATION PROCEDURES

Paragraph 343 applies.

M344 TYPES OF EXAMINATION

Paragraph 344 applies in its entirety.

M345 TESTING

Paragraph 345 applies in its entirety, except that

(a) a sensitive leak test in accordance with para. 345.8 shall be included in the required leak test (para. 345.1) and

(b) the initial service leak test (para. 345.7) does not apply

M346 RECORDS

Paragraph 346 applies in its entirety.

PARTS 11 THROUGH 20, CORRESPONDING TO CHAPTER VII

See para. M300(b).

MA300 GENERAL STATEMENTS

Paragraphs MA300 through MA346 apply to nonmetallic piping and piping lined with nonmetals, based on Chapter VII. Paragraph A300(d) applies.

PART 11
CONDITIONS AND CRITERIA

MA301 DESIGN CONDITIONS

Paragraph A301 applies in its entirety.

MA302 DESIGN CRITERIA

Paragraphs A302.1 and A302.4 apply. See paras. MA302.2 and MA302.3.

MA302.2 Pressure-Temperature Design Criteria

Paragraph A302.2 applies, with the exception of para. A302.2.4. See para. MA302.2.4.

MA302.2.4 Allowances for Pressure and Temperature Variation. Paragraph A302.2.4(a) applies to both nonmetallic piping and to metallic piping with nonmetallic lining.

MA302.3 Allowable Stresses and Other Design Limits

Paragraph A302.3 applies, with the exception of para. A302.3.2. See para. MA302.3.2.

MA302.3.2 Bases for Allowable Stress. The designer shall fully document the bases for using any stress or allowable pressure limit not in accordance with both para. A302.3.2 and the Tables in Appendix B.

MA302.4 Allowances

Paragraph 302.4 applies in its entirety.

PART 12
PRESSURE DESIGN OF NONMETALLIC PIPING COMPONENTS

MA303 GENERAL

Paragraph A303 applies.

Copyright ASME International
Provided by IHS under license with ASME
No reproduction or networking permitted without license from IHS
Not for Resale

MA304 PRESSURE DESIGN OF NONMETALLIC COMPONENTS

Paragraph A304 applies in its entirety.

PART 13
FLUID SERVICE REQUIREMENTS FOR NONMETALLIC PIPING COMPONENTS

MA305 PIPE

Paragraph A305 applies without further restrictions.

MA306 NONMETALLIC FITTINGS, BENDS, MITERS, LAPS, AND BRANCH CONNECTIONS

Paragraphs A306.1 and A306.2 apply without further restrictions. See para. MA306.3.

MA306.3 Miter Bends

Miter bends not designated as fittings conforming to para. A306.1 shall not be used.

MA306.4 Fabricated Laps

Fabricated laps shall not be used.

MA306.5 Fabricated Branch Connections

Nonmetallic fabricated branch connections shall not be used.

MA307 NONMETALLIC VALVES AND SPECIALTY COMPONENTS

Nonmetallic valves and specialty components shall not be used.

MA308 FLANGES, BLANKS, FLANGE FACINGS, AND GASKETS

Paragraphs A308.1, 308.3, and A308.4 apply without further restrictions. See para. MA308.2.

MA308.2 Nonmetallic Flanges

Threaded nonmetallic flanges shall not be used.

MA309 BOLTING

Paragraph A309 applies without further restrictions.

PART 14
FLUID SERVICE REQUIREMENTS FOR NONMETALLIC PIPING JOINTS

MA310 GENERAL

Paragraph 310 applies in its entirety.

MA311 BONDED JOINTS

MA311.1 General

Paragraph A311.1 applies in its entirety.

MA311.2 Specific Requirements

Hot gas welded, heat fusion, solvent cemented, and adhesive bonded joints are not permitted except in linings.

MA312 FLANGED JOINTS

Paragraph 312 applies in its entirety.

MA313 EXPANDED JOINTS

Expanded joints shall not be used.

MA314 THREADED JOINTS

MA314.1 General

Threaded joints shall not be used in nonmetallic piping.

MA315 TUBING JOINTS IN NONMETALLIC PIPING

Paragraph A315 applies in its entirety.

MA316 CAULKED JOINTS

Caulked joints shall not be used.

MA318 SPECIAL JOINTS

Paragraph A318 applies in its entirety.

PART 15
FLEXIBILITY AND SUPPORT OF NONMETALLIC PIPING

MA319 PIPING FLEXIBILITY

Paragraph A319 applies in its entirety.

MA321 PIPING SUPPORT

Paragraph A321 applies in its entirety.

PART 16
NONMETALLIC AND NONMETALLIC LINED SYSTEMS

MA322 SPECIFIC PIPING SYSTEMS

Paragraph A322 applies in its entirety.

Copyright ASME International
Provided by IHS under license with ASME
No reproduction or networking permitted without license from IHS Not for Resale

PART 17
NONMETALLIC MATERIALS

MA323 GENERAL REQUIREMENTS

Paragraphs A323.1 and A323.2 apply in their entirety. See para. MA323.4.

MA323.4 Fluid Service Requirements for Nonmetallic Materials

Paragraph A323.4.1 applies. See paras. MA323.4.2 and MA323.4.3.

MA323.4.2 Specific Requirements. Materials listed under paras. A323.4.2(a) and (b) may be used only as linings, except that thermoplastics may be used as gaskets in accordance with paras. M325.1 and MA323.4.3.

MA323.4.3 Nonmetallic Lining Materials. Where a material in para. A323.4.2 is used as a lining which also serves as a gasket or as part of the flange facing, consideration shall be given to design of the flanged joint to prevent leakage to the environment.

PART 18
STANDARDS FOR NONMETALLIC AND NONMETALLIC LINED PIPING COMPONENTS

MA326 DIMENSIONS AND RATINGS OF COMPONENTS

Paragraph A326 applies in its entirety. Table A326.1 applies, except for components and systems prohibited or restricted elsewhere in this Chapter.

PART 19
FABRICATION, ASSEMBLY, AND ERECTION OF NONMETALLIC AND NONMETALLIC LINED PIPING

MA327 GENERAL

Paragraph A327 applies.

MA328 BONDING OF PLASTICS

Paragraph A328 applies in its entirety.

MA329 FABRICATION OF PIPING LINED WITH NONMETALS

Paragraph A329 applies in its entirety.

MA332 BENDING AND FORMING

Paragraph A332 applies.

MA334 JOINING NONPLASTIC PIPING

Paragraph A334 applies in its entirety.

MA335 ASSEMBLY AND ERECTION

Paragraph A335 applies in its entirety.

PART 20
INSPECTION, EXAMINATION, TESTING, AND RECORDS OF NONMETALLIC AND NONMETALLIC LINED PIPING

MA340 INSPECTION

Paragraph 340 applies in its entirety.

MA341 EXAMINATION

Paragraph A341 applies in its entirety.

MA341.1 General (04)

Paragraphs 341.1, 341.2, A341.3, and A341.5 apply in their entirety. See para. MA341.2.

MA341.2 Extent of Required Examination (04)

Paragraph A341.4.1 applies, except:

(a) Visual Examination

(1) All fabrication shall be visually examined.

(2) All bolted and other mechanical joints shall be examined.

MA342 EXAMINATION PERSONNEL

Paragraph 342 applies.

MA343 EXAMINATION PROCEDURES

Paragraph 343 applies.

MA344 TYPES OF EXAMINATION

Paragraph A344 applies in its entirety.

MA345 TESTING (04)

Paragraph A345 applies in its entirety, except that

(a) a sensitive leak test in accordance with para. 345.8 shall be included in the required leak test (para. A345.1)

(b) the initial service leak test (para. A345.7) does not apply

MA346 RECORDS

Paragraph 346 applies in its entirety.

Copyright ASME International
Provided by IHS under license with ASME
No reproduction or networking permitted without license from IHS
Not for Resale

Chapter IX
High Pressure Piping

K300 GENERAL STATEMENTS

(a) Applicability. This Chapter pertains to piping designated by the owner as being in High Pressure Fluid Service. Its requirements are to be applied in full to piping so designated. High pressure is considered herein to be pressure in excess of that allowed by the ASME B16.5 PN 420 (Class 2500) rating for the specified design temperature and material group. However, there are no specified pressure limitations for the application of these rules.

(b) Responsibilities. In addition to the responsibilities stated in para. 300(b),

(1) for each piping system designated as being in High Pressure Fluid Service, the owner shall provide all information necessary to perform the analyses and testing required by this Chapter

(2) the designer shall make a written report to the owner summarizing the design calculations and certifying that the design has been performed in accordance with this Chapter

(c) The identification, intent, and Code requirements in paras. 300(a), (c), (d), (e), and (f) apply.

(d) The organization, content, and, wherever possible, paragraph designations of this Chapter correspond to those of the first six Chapters (the base Code). The prefix K is used.

(e) Provisions and requirements of the base Code apply only as stated in this Chapter.

K300.1 Scope

K300.1.1 Content and Coverage. Paragraph 300.1.1 applies with the exceptions stated in paras. K300.1.3 and K300.1.4.

K300.1.2 Packaged Equipment Piping. Interconnecting piping as described in para. 300.1.2 shall conform to the requirements of this Chapter.

K300.1.3 Exclusions. In addition to the exclusions stated in para. 300.1.3, this Chapter excludes nonmetallic and nonmetallic-lined piping.

K300.1.4 Category M Fluid Service. This Chapter makes no provision for piping in Category M Fluid Service. If such piping is required by the owner, the engineering design shall be developed as provided in para. 300(c)(5).

K300.2 Definitions

Paragraph 300.2 applies except for terms relating only to nonmetals and severe cyclic conditions.

The term allowable stress is used in lieu of basic allowable stress.

The term safeguarding and other terms characterizing hazardous fluid services are not used in this Chapter but should be taken into account in design.

K300.3 Nomenclature

Paragraph 300.3 applies.

K300.4 Status of Appendices

Paragraph 300.4 and Table 300.4 apply, except for Appendices A, B, H, L, V, and X.

PART 1
CONDITIONS AND CRITERIA

K301 DESIGN CONDITIONS

Paragraph 301 applies with the exceptions of paras. 301.1, 301.2, 301.3, and 301.5.

K301.1 General

Paragraph 301.1 applies but refer to para. K301 instead of para. 301.

K301.2 Design Pressure

K301.2.1 General. Paragraph 301.2.1(a) applies except that reference to para. 302.2.4 is not applicable. Paragraphs 301.2.1(b) and (c) apply, but refer to para. K304 instead of para. 304.

K301.2.2 Required Pressure Containment or Relief. Paragraphs 301.2.2(a) and (b) apply, but refer to para. K322.6.3 instead of para. 322.6.3. Paragraph 301.2.2(c) is not applicable.

K301.3 Design Temperature

Paragraph 301.3 applies with the exceptions of paras. 301.3.1 and 301.3.2 and the following exceptions in the text.

(a) Refer to para. K301.2 instead of para. 301.2.

(b) Refer to para. K301.3.2 instead of para. 301.3.2.

K301.3.1 Design Minimum Temperature. Paragraph 301.3.1 applies, but refer to para. K323.2.2 instead of para. 323.2.2.

Copyright ASME International
Provided by IHS under license with ASME
No reproduction or networking permitted without license from IHS
Not for Resale

K301.3.2 Uninsulated Components. The fluid temperature shall be used as the component temperature.

K301.5 Dynamic Effects

Paragraph 301.5 applies with the exception of para. 301.5.4.

K301.5.4 Vibration. Suitable dynamic analysis shall be made where necessary, to avoid or minimize conditions which lead to detrimental vibration, pulsation, or resonance effects in the piping.

K302 DESIGN CRITERIA

K302.1 General

In para. K302, pressure-temperature ratings, stress criteria, design allowances, and minimum design values are stated, and permissible variations of these factors as applied to design of high pressure piping systems are formulated.

The designer shall be satisfied as to the adequacy of the design, and of materials and their manufacture, considering at least the following:

(a) tensile, compressive, flexural, and shear strength at design temperature
(b) fatigue strength
(c) design stress and its basis
(d) ductility and toughness
(e) possible deterioration of mechanical properties in service
(f) thermal properties
(g) temperature limits
(h) resistance to corrosion and erosion
(i) fabrication methods
(j) examination and testing methods
(k) hydrostatic test conditions
(l) bore imperfections

K302.2 Pressure-Temperature Design Criteria

K302.2.1 Listed Components Having Established Ratings. Pressure-temperature ratings for certain piping components have been established and are contained in some of the standards in Table K326.1. Unless limited elsewhere in this Chapter, those ratings are acceptable for design pressures and temperatures under this Chapter. With the owner's approval, the rules and limits of this Chapter may be used to extend the pressure-temperature ratings of a component beyond the ratings of the listed standard, but not beyond the limits stated in para. K323.2.

K302.2.2 Listed Components Not Having Specific Ratings

(a) Piping components for which design stresses have been developed in accordance with para. K302.3, but which do not have specific pressure-temperature ratings, shall be rated by rules for pressure design in para. K304, within the range of temperatures for which stresses are shown in Table K-1, modified as applicable by other rules of this Chapter.

(b) Piping components which do not have allowable stresses or pressure-temperature ratings shall be qualified for pressure design as required by para. K304.7.2.

K302.2.3 Unlisted Components

(a) Piping components not listed in Table K326.1 or Table K-1, but which conform to a published specification or standard, may be used subject to the following requirements:

(1) The designer shall determine that composition, mechanical properties, method of manufacture, and quality control are comparable to the corresponding characteristics of listed components.

(2) Pressure design shall be verified in accordance with para. K304, including the fatigue analysis required by para. K304.8.

(b) Other unlisted components shall be qualified for pressure design as required by para. K304.7.2.

K302.2.4 Allowance for Pressure and Temperature Variations. Variations in pressure above the design pressure at the coincident temperature, except for accumulation during pressure relieving (see para. K322.6.3), are not permitted for any piping system.

K302.2.5 Ratings at Junction of Different Services. Paragraph 302.2.5 applies.

K302.3 Allowable Stresses and Other Design Limits

K302.3.1 General. The allowable stresses defined below shall be used in design calculations unless modified by other provisions of this Chapter.

(a) Tension. Allowable stresses in tension for use in design in accordance with this Chapter are listed in Table K-1, except that maximum allowable stress values and design stress intensity values for bolting, respectively, are listed in the BPV Code, Section II, Part D, Tables 3 and 4.

The tabulated stress values in Table K-1 are grouped by materials and product form and are for stated temperatures up to the limit provided for the materials in para. K323.2.1. Straight line interpolation between temperatures to determine the allowable stress for a specific design temperature is permissible. Extrapolation is not permitted.

(b) Shear and Bearing. Allowable stress in shear shall be 0.80 times the allowable stress in tension tabulated in Table K-1. Allowable stress in bearing shall be 1.60 times the allowable stress in tension.

(c) Compression. Allowable stress in compression shall be no greater than the allowable stress in tension tabulated in Table K-1. Consideration shall be given to structural stability.

(d) Fatigue. Allowable values of stress amplitude, which are plotted as a function of design life in the BPV (04)

Copyright ASME International
Provided by IHS under license with ASME
No reproduction or networking permitted without license from IHS
Not for Resale

Code, Section VIII, Division 2, Appendix 5, or Division 3, Article KD-3, as applicable, may be used in fatigue analysis in accordance with para. K304.8.

(04) **K302.3.2 Bases for Allowable Stresses.** The bases for establishing allowable stress values for materials in this Chapter are as follows.

(a) Bolting Materials. The criteria of Section II, Part D, Appendix 2, para. 2-120 or 2-130, or Section VIII, Division 3, Article KD-6, para. KD-620, as applicable, apply.

(b) Other Materials. For materials other than bolting materials, the following rules apply.

(1) Except as provided in (b)(2) below, allowable stress values at design temperature for materials shall not exceed the lower of two-thirds of S_Y and two-thirds of S_{yt}. S_{yt} is determined in accordance with Equation (31)

$$S_{yt} = S_Y R_Y \quad (31)$$

where

R_Y = ratio of the average temperature dependent trend curve value of yield strength to the room temperature yield strength
S_Y = specified minimum yield strength at room temperature
S_{yt} = yield strength at temperature

(2) For solution heat treated austenitic stainless steels and certain nickel alloys with similar stress-strain behavior, allowable stress values shall not exceed the lower of two-thirds of S_Y and 90% of S_{yt}.

Application of stress values so determined is not recommended for flanged joints and other components in which slight deformation can cause leakage or malfunction. [These values are shown in *italics* or **boldface** in Table K-1, as explained in Note (5) to Appendix K Tables.] Instead, either 75% of the stress value in Table K-1 or two-thirds of the yield strength at temperature listed in Section II, Part D, Table Y-1 or Table Y-3, as applicable, should be used.

(c) Unlisted Materials. For a material that conforms to para. K323.1.2, allowable stress values at design temperature shall not exceed the lower of: two-thirds of S_Y and two-thirds of S_{yt}.

(1) Except as provided in (c)(2) below, S_{yt} shall be determined in accordance with Eq. (31).

(2) If the yield strength at temperature for an unlisted material is contained in Section II, Part D, Table Y-1 or Table Y-3, that yield strength at temperature value may be used directly in the determination of allowable stress.

(d) Cyclic Stresses. Allowable values of alternating stress or equipment alternating stress, as applicable shall be in accordance with Section VIII, Division 2, Appendices, 4 and 5 or Division, 3, Article KD-3, respectively.

K302.3.3 Casting Quality Factor.[1] The casting quality factor E_c shall be 1.00 by conformance to all of the following supplementary requirements.

(a) All surfaces shall have a surface finish not rougher than 6.3 μm R_a (250 μin. R_a per ASME B46.1).

(b) All surfaces shall be examined by either the liquid penetrant method in accordance with ASTM E 165, or the magnetic particle method in accordance with ASTM E 709. Acceptability of imperfections and weld repairs shall be judged in accordance with MSS SP-53, using ASTM E 125 as reference.

(c) Each casting shall be fully examined either ultrasonically in accordance with ASTM E 114, or radiographically in accordance with ASTM E 142. Cracks and hot tears (Category D and E discontinuities per the standards listed in Table K302.3.3D) and imperfections whose depth exceeds 3% of nominal wall thickness are not permitted. Acceptable severity levels for radiographic examination of castings shall be in accordance with Table K302.3.3D.

K302.3.4 Weld Joint Quality Factor. Piping components containing welds shall have a weld joint quality factor E_j = 1.00 (see Table 302.3.4 for requirements) except that the acceptance criteria for these welds shall be in accordance with para. K341.3.2. Spiral welds are not permitted.

K302.3.5 Limits of Calculated Stresses Due to Sustained Loads and Displacement Strains

(a) Internal Pressure Stresses. Stresses due to internal pressure shall be considered safe when the wall thickness of the piping component, and its means of stiffening, meet the requirements of para. K304.

(b) External Pressure Stresses. Stresses due to external pressure shall be considered safe when the wall thickness of the piping component, and its means of stiffening, meet the requirements of para. K304.

(c) Longitudinal Stresses S_L. The sum of the longitudinal (04) stresses S_L in any component in a piping system due to sustained loads, such as pressure and weight, shall not exceed S_h in (d) below. The thickness of pipe used in calculating S_L shall be the nominal thickness minus mechanical, corrosion, and erosion allowance c.

(d) Allowable Displacement Stress Range S_A. The computed displacement stress range S_E in a piping system (see para. 319.4.4) shall not exceed the allowable displacement stress range S_A (see para. 319.2.3) calculated by

$$S_A = 1.25S_c + 0.25S_h \quad (32)$$

where

[1] See Notes to Tables 302.3.3C and 302.3.3D for titles of standards referenced herein.

Copyright ASME International
Provided by IHS under license with ASME
No reproduction or networking permitted without license from IHS
Not for Resale

Table K302.3.3D Acceptable Severity Levels for Steel Castings

Thickness Examined, mm (in.)	Applicable Standards	Acceptable Severity Level	Acceptable Discontinuity Categories
$\overline{T} \le 51$ (2)	ASTM E 446	1	A, B, C
$51 < \overline{T} \le 114$ (4.5)	ASTM E 186	1	A, B, C
$114 < \overline{T} \le 305$ (12)	ASTM E 280	1	A, B, C

S_c = allowable stress from Table K-1 at minimum metal temperature expected during the displacement cycle under analysis

S_h = allowable stress from Table K-1 at maximum metal temperature expected during the displacement cycle under analysis

K302.3.6 Limits of Calculated Stresses Due to Occasional Loads

(04) *(a) Operation.* The sum of the longitudinal stresses S_L due to sustained loads, such as pressure and weight, and of the stresses produced by occasional loads, such as wind or earthquake, may be as much as 1.2 times the allowable stress given in Table K-1. Wind and earthquake forces need not be considered as acting concurrently.

(b) Test. Stresses due to test conditions are not subject to the limitations in para. K302.3. It is not necessary to consider other occasional loads, such as wind and earthquake, as occurring concurrently with test loads.

K302.4 Allowances

In determining the minimum required thickness of a piping component, allowances shall be included for corrosion, erosion, and thread or groove depth. See the definition of c in para. K304.1.1(b).

K302.4.1 Mechanical Strength. Paragraph 302.4.1 applies. In addition, a fatigue analysis in accordance with para. K304.8 shall be performed for any means used to increase the strength of a piping component.

PART 2
PRESSURE DESIGN OF PIPING COMPONENTS

K303 GENERAL

Components manufactured in accordance with standards listed in Table K326.1 shall be considered suitable for use at pressure-temperature ratings in accordance with para. K302.2.

K304 PRESSURE DESIGN OF HIGH PRESSURE COMPONENTS

K304.1 Straight Pipe

K304.1.1 General

(a) The required wall thickness of straight sections of pipe shall be determined in accordance with Eq. (33).

$$t_m = t + c \tag{33}$$

The minimum wall thickness T for the pipe selected, considering manufacturer's minus tolerance, shall be not less than t_m.

(b) The following nomenclature is used in the equation for pressure design of straight pipe.

$c = c_I + c_o$

= the sum of mechanical allowances[2] (thread or groove depth) plus corrosion and erosion allowances (where c_I = the sum of *internal* allowances and c_o = the sum of *external* allowances). For threaded components, the nominal thread depth (dimension h of ASME B1.20.1 or equivalent) shall apply, except that for straight threaded connections, the external thread groove depth need not be considered provided:

(a) it does not exceed 20% of the wall thickness;

(b) the ratio of outside to inside diameter, D/d, is greater than 1.1;

(c) the internally threaded attachment provides adequate reinforcement; and

(d) the thread plus the undercut area, if any, does not extend beyond the reinforcement for a distance more than the nominal wall thickness of the pipe.

t = pressure design wall thickness, as calculated in para. K304.1.2 for internal pressure, or in accordance with the procedure listed in para. K304.1.3 for external pressure

t_m = minimum required wall thickness, including mechanical, corrosion, and erosion allowances

Adequate reinforcement by the attachment is defined as that necessary to ensure that the static burst pressure of the connection will equal or exceed that of the

[2] For machined surfaces or grooves where the tolerance is not specified, the tolerance shall be assumed to be 0.5 mm (0.02 in.) in addition to the specified depth of the cut.

Copyright ASME International
Provided by IHS under license with ASME
No reproduction or networking permitted without license from IHS
Not for Resale

unthreaded portion of the pipe. The adequacy of the reinforcement shall be substantiated as required by para. K304.7.2.

(04) **K304.1.2 Straight Pipe Under Internal Pressure.** The internal pressure design wall thickness t shall be not less than that calculated in accordance with Eq. (34a) for pipe with a specified outside diameter and minimum wall thickness, or Eq. (34b) for pipe with a specified inside diameter and minimum wall thickness.

$$t = \frac{D - 2c_o}{2}\left[1 - \exp\left(\frac{-1.155P}{S}\right)\right] \qquad (34a)^{3,4,5}$$

or

$$t = \frac{d + 2c_I}{2}\left[\exp\left(\frac{1.155P}{S}\right) - 1\right] \qquad (34b)^{3,4,5}$$

Alternatively, the internal design gage pressure P may be calculated by Eq. (35a) or (35b).

$$P = \frac{S}{1.155}\ln\left[\frac{D - 2c_o}{D - 2(T - c_I)}\right] \qquad (35a)^{4,5}$$

or

$$P = \frac{S}{1.155}\ln\left[\frac{d + 2(T - c_o)}{d + 2c_I}\right] \qquad (35b)^{4,5}$$

where

D = outside diameter of pipe. For design calculations in accordance with this Chapter, the outside diameter of the pipe is the maximum value allowable under the specifications.
d = inside diameter of pipe. For design calculations in accordance with this Chapter, the inside diameter of the pipe is the maximum value allowable under the specifications.
P = internal design gage pressure
S = allowable stress from Table K-1
T = pipe wall thickness (measured or minimum per purchase specification)

K304.1.3 Straight Pipe Under External Pressure. The pressure design thickness for straight pipe under external pressure shall be determined in accordance with para. K304.1.2 for pipe where $D/t < 3.33$, if at least one end of the pipe is exposed to full external pressure, producing a compressive axial stress. For $D/t \geq 3.33$, and for $D/t < 3.33$ where external pressure is not applied to at least one end of the pipe, the pressure design wall thickness shall be determined in accordance with para. 304.1.3 except that the stress values shall be taken from Table K-1.

K304.2 Curved and Mitered Segments of Pipe

K304.2.1 Pipe Bends. The minimum required wall thickness t_m of a bend, after bending, may be determined as for straight pipe in accordance with para. K304.1, provided that the bend radius of the pipe centerline is equal to or greater than ten times the nominal pipe outside diameter and the tolerances and strain limits of para. K332 are met. Otherwise the design shall be qualified as required by para. K304.7.2.

K304.2.2 Elbows. Manufactured elbows not in accordance with para. K303 and pipe bends not in accordance with para. K304.2.1 shall be qualified as required by para. K304.7.2.

K304.2.3 Miter Bends. Miter bends are not permitted.

K304.2.4 Curved Segments of Pipe Under External Pressure. The wall thickness of curved segments of pipe subjected to external pressure may be determined as specified for straight pipe in para. K304.1.3 provided the design length L is the running centerline length between any two sections which are stiffened in accordance with para. 304.1.3.

K304.3 Branch Connections

K304.3.1 General. Acceptable branch connections include: a fitting in accordance with para. K303; an extruded outlet in accordance with para. 304.3.4; or a branch connection fitting (see para. 300.2) similar to that shown in Fig. K328.5.4.

K304.3.2 Strength of Branch Connections

(a) The opening made for a branch connection reduces both static and fatigue strength of the run pipe. There shall be sufficient material in the branch connection to contain pressure and meet reinforcement requirements.

(b) Static pressure design of a branch connection not in accordance with para. K303 shall conform to para. 304.3.4 for an extruded outlet or shall be qualified as required by para. K304.7.2.

K304.3.3 Reinforcement of Welded Branch Connections. Branch connections made as provided in para. 304.3.3 are not permitted.

K304.4 Closures

(a) Closures not in accordance with para. K303 or (b) below shall be qualified as required by para. K304.7.2.

(b) Closures may be designed in accordance with the rules, allowable stresses, and temperature limits of the

[3] An exponential [e.g., the term exp (−1.155P/S)] represents the base of natural logarithms e raised to the stated power (i.e., −1.155P/S).

[4] The intent of this equation is to provide a factor of not less than 2.0 on the pressure required, according to the von Mises theory, to initiate yielding on the outside surface of a cylinder made from an elastic-perfectly plastic material, when the allowable stress of the material is based on $^2/_3$ of the yield strength. When the allowable stress is based on 90% of the yield strength, the factor is reduced from 2.0 to approximately 1.5.

[5] Any mechanical, corrosion, or erosion allowance c not specified as internal c_I or external c_o shall be assumed to be internal, i.e., $c = c_I$ and $c_o = 0$.

Copyright ASME International
Provided by IHS under license with ASME
No reproduction or networking permitted without license from IHS
Not for Resale

BPV Code, Section VIII, Division 2 or Division 3, and Section II, Part D.

K304.5 Pressure Design of Flanges and Blanks

K304.5.1 Flanges — General

(a) Flanges not in accordance with para. K303 or (b) below shall be qualified as required by para. K304.7.2.

(b) A flange may be designed in accordance with the rules, allowable stresses, and temperature limits of Section VIII, Division 2, Appendix 3 (or Appendices 4, 5, and 6) or Division 3, Article KD-6, and Section II, Part D.

K304.5.2 Blind Flanges

(a) Blind flanges not in accordance with para. K303 or (b) or (c) below shall be qualified as required by para. K304.7.2.

(b) A blind flange may be designed in accordance with Eq. (36). The thickness of the flange selected shall be not less than t_m (see para. K304.1.1 for nomenclature), considering manufacturing tolerance:

$$t_m = t + c \tag{36}$$

The rules, allowable stresses, and temperature limits of Section VIII, Division 2, AD-700 may be used, with the following changes in nomenclature, to calculate t_m:

c = sum of mechanical allowances, defined in para. K304.1.1

t = pressure design thickness (in place of T) as calculated for the given style of blind flange using the appropriate equation of AD-700

(c) A blind flange may be designed in accordance with the rules, allowable stresses, and temperature limits of Section VIII, Division 3, Article KD-6 and Section II, Part D.

K304.5.3 Blanks. Design of blanks shall be in accordance with para. 304.5.3, except that E shall be 1.00 and the definitions of S and c shall be in accordance with para. K304.1.1.

K304.6 Reducers

Reducers not in accordance with para. K303 shall be qualified as required by para. K304.7.2.

K304.7 Pressure Design of Other Components

K304.7.1 Listed Components. Other pressure containing components manufactured in accordance with standards in Table K326.1 may be utilized in accordance with para. K303.

K304.7.2 Unlisted Components and Elements. Static pressure design of unlisted components and other piping elements, to which the rules in paras. K304.1 through K304.6 do not apply, shall be based on calculations consistent with the design philosophy of this Chapter. These calculations shall be substantiated by one or more of the means stated in (a), (b), and (c) below, considering applicable ambient and dynamic effects in paras. 301.4 through 301.11:

(a) extensive, successful service experience under comparable design conditions with similarly proportioned components made of the same or like material;

(b) performance testing sufficient to substantiate both the static pressure design and fatigue life at the intended operating conditions. Static pressure design may be substantiated by demonstrating that failure or excessive plastic deformation does not occur at a pressure equivalent to two times the internal design pressure P. The test pressure shall be two times the design pressure multiplied by the ratio of allowable stress at test temperature to the allowable stress at design temperature, and by the ratio of actual yield strength to the specified minimum yield strength at room temperature from Table K-1;

(c) detailed stress analysis (e.g., finite element method) with results evaluated as described in Section VIII, Division 3, Article KD-2;

(d) for (a), (b), and (c) above, interpolations supported by analysis, are permitted between sizes, wall thicknesses, and pressure classes, as well as analogies among related materials with supporting material property data. Extrapolation is not permitted.

K304.7.3 Components With Nonmetallic Parts. Except for gaskets and packing, nonmetallic parts are not permitted.

K304.7.4 Bellows Type Expansion Joints. Bellows type expansion joints are not permitted.

K304.8 Fatigue Analysis (04)

K304.8.1 General. A fatigue analysis shall be performed on each piping system, including all components[6] and joints therein, and considering the stresses resulting from attachments, to determine its suitability for the cyclic operating conditions[7] specified in the engineering design. Except as permitted in (a) and (b) below, or in paras. K304.8.4 and K304.8.5, this analysis shall be in accordance with the BPV Code, Section VIII, Division 2 or Division 3.[8] The cyclic conditions shall include pressure variations as well as thermal variations or displacement stresses. The requirements of para. K304.8 are in addition to the requirements for a flexibility analysis stated in para. K319. No formal fatigue analysis is required in systems that:

[6] Bore imperfections may reduce fatigue life.

[7] If the range of temperature change varies, equivalent full temperature cycles N may be computed as provided in footnote 6 to para. 302.3.5.

[8] Fatigue analysis in accordance with Section VIII, Division 2 or Division 3, requires that stress concentration factors be used in computing the cyclic stresses.

Copyright ASME International
Provided by IHS under license with ASME
No reproduction or networking permitted without license from IHS
Not for Resale

(a) are duplicates of successfully operating installations or replacements without significant change of systems with a satisfactory service record; or

(b) can readily be judged adequate by comparison with previously analyzed systems.

K304.8.2 Amplitude of Alternating Stress

(a) Fatigue Analysis Based Upon Section VIII, Division 2. The value of the alternating stress amplitude for comparison with design fatigue curves shall be determined in accordance with Appendices 4 and 5. The allowable amplitude of alternating stress shall be determined from the applicable design fatigue curve in Appendix 5.

(b) Fatigue Analysis Based Upon Section VIII, Division 3

(1) The values of the alternating stress intensity, the associated mean stress, and the equivalent alternating stress intensity shall be determined in accordance with Articles KD-2 and KD-3. The allowable amplitude of the equivalent alternating stress shall be determined from the applicable design fatigue curve in Article KD-3.

(2) If it can be shown that the piping component will fail in a leak-before-burst mode, the number of design cycles (design fatigue life) may be calculated in accordance with either Article KD-3 or Article KD-4. If a leak-before-burst mode of failure cannot be shown, the fracture mechanics evaluation outlined in Article KD-4 shall be used to determine the number of design cycles of the component.

(c) Additional Considerations. The designer is cautioned that the considerations listed in para. K302.1 may reduce the fatigue life of the component below the value predicted by para. (a) or (b) above.

K304.8.3 Pressure Stress Evaluation for Fatigue Analysis

(a) For fatigue analysis of straight pipe, Eq. (37) may be used to calculate the stress intensity[9] at the inside surface due only to internal pressure.

$$S = \frac{PD^2}{2(T - c)\left[D - (T - c)\right]} \qquad (37)$$

(b) For fatigue analysis of curved pipe, Eq. (37) may be used, with the dimensions of the straight pipe from which it was formed, to calculate the maximum stress intensity at the inside surface due only to internal pressure, provided that the centerline bend radius is not less than ten times the nominal outside diameter of the pipe, and that the tolerance and strain limits of para. K332 are met. Bends of smaller radius shall be qualified as required by para. K304.7.2.

(c) If the value of S calculated by Eq. (37) exceeds three times the allowable stress from Table K-1 at the average temperature during the loading cycle, an inelastic analysis is required.

[9] The term *stress intensity* is defined in Section VIII, Division 2 and Division 3.

K304.8.4 Fatigue Evaluation by Test. With the owner's approval, the design fatigue life of a component may be established by destructive testing in accordance with para. K304.7.2 in lieu of the above analysis requirements.

K304.8.5 Extended Fatigue Life. The design fatigue life of piping components may be extended beyond that determined by the Section VIII, Division 2, Appendix 5, or Division 3, Article KD-3, fatigue curves, as applicable, by the use of one of the methods listed below, provided that the component is qualified in accordance with para. K304.7.2:

(a) surface treatments, such as improved surface finish

(b) prestressing methods, such as autofrettage, shot peening, or shrink fit

The designer is cautioned that the benefits of prestress may be reduced due to thermal, strain softening, or other effects.

PART 3
FLUID SERVICE REQUIREMENTS FOR PIPING COMPONENTS

K305 PIPE

Pipe includes components designated as "tube" or "tubing" in the material specification, when intended for pressure service.

K305.1 Requirements

K305.1.1 General. Pipe and tubing shall be either seamless or longitudinally welded with straight seam and a joint quality factor $E_j = 1.00$, examined in accordance with Note (2) of Table K341.3.2.

K305.1.2 Additional Examination. Pipe and tubing shall have passed a 100% examination for longitudinal defects in accordance with Table K305.1.2. This examination is in addition to acceptance tests required by the material specification.

K305.1.3 Heat Treatment. Heat treatment, if required, shall be in accordance with para. K331.

K305.1.4 Unlisted Pipe and Tubing. Unlisted pipe and tubing may be used only in accordance with para. K302.2.3.

K306 FITTINGS, BENDS, AND BRANCH CONNECTIONS

Pipe and other materials used in fittings, bends, and branch connections shall be suitable for the manufacturing or fabrication process and otherwise suitable for the service.

Copyright ASME International
Provided by IHS under license with ASME
No reproduction or networking permitted without license from IHS
Not for Resale

Table K305.1.2 Required Ultrasonic or Eddy Current Examination of Pipe and Tubing for Longitudinal Defects

Diameter, mm (in.)	Examination Required	Paragraph Reference
$d < 3.2$ ($1/8$) or $D < 6.4$ ($1/4$)	None	. . .
$3.2 \le d \le 17.5$ ($11/16$) and $6.4 \le D \le 25.4$ (1)	Eddy current (ET) [Note (1)] or ultrasonic (UT)	K344.8 or K344.6
$d > 17.5$ or $D > 25.4$	Ultrasonic (UT)	K344.6

NOTE:
(1) This examination is limited to cold drawn austenitic stainless steel pipe and tubing.

K306.1 Pipe Fittings

K306.1.1 General. All castings shall have a casting quality factor $E_c = 1.00$, with examination and acceptance criteria in accordance with para. K302.3.3. All welds shall have a weld quality factor $E_j = 1.00$, with examination and acceptance criteria in accordance with paras. K341 through K344. Listed fittings may be used in accordance with para. K303. Unlisted fittings may be used only in accordance with para. K302.2.3.

K306.1.2 Specific Fittings

(a) Socket welding fittings are not permitted.

(b) Threaded fittings are permitted only in accordance with para. K314.

(c) Branch connection fittings (see para. 300.2) whose design has been performance tested successfully as required by para. K304.7.2(b) may be used within their established ratings.

K306.2 Pipe Bends

K306.2.1 General. A bend made in accordance with para. K332.2 and verified for pressure design in accordance with para. K304.2.1 shall be suitable for the same service as the pipe from which it is made.

K306.2.2 Corrugated and Other Bends. Bends of other design (such as creased or corrugated) are not permitted.

K306.3 Miter Bends

Miter bends are not permitted.

K306.4 Fabricated or Flared Laps

Only forged laps are permitted.

K306.5 Fabricated Branch Connections

Fabricated branch connections constructed by welding shall be fabricated in accordance with para. K328.5.4 and examined in accordance with para. K341.4.

K307 VALVES AND SPECIALTY COMPONENTS

The following requirements for valves shall also be met, as applicable, by other pressure containing piping components, such as traps, strainers, and separators.

K307.1 General

Pressure design of unlisted valves shall be qualified as required by para. K304.7.2.

K308 FLANGES, BLANKS, FLANGE FACINGS, AND GASKETS

K308.1 General

Pressure design of unlisted flanges shall be verified in accordance with para. K304.5.1 or qualified as required by para. K304.7.2.

K308.2 Specific Flanges

K308.2.1 Threaded Flanges. Threaded flanges may be used only within the limitations on threaded joints in para. K314.

K308.2.2 Other Flange Types. Slip-on, socket welding, and expanded joint flanges, and flanges for flared laps, are not permitted.

K308.3 Flange Facings

The flange facing shall be suitable for the service and for the gasket and bolting employed.

K308.4 Gaskets

Gaskets shall be selected so that the required seating load is compatible with the flange rating and facing, the strength of the flange, and its bolting. Materials shall be suitable for the service conditions. Mode of gasket failure shall be considered in gasket selection and joint design.

K308.5 Blanks

Blanks shall have a marking identifying material, pressure-temperature rating, and size, which is visible after installation.

K309 BOLTING

Bolting, including bolts, bolt studs, studs, cap screws, nuts, and washers, shall meet the requirements of the

Copyright ASME International
Provided by IHS under license with ASME
No reproduction or networking permitted without license from IHS
Not for Resale

BPV Code, Section VIII, Division 2, Article M-5. See also Appendix F, para. F309, of this Code.

PART 4
FLUID SERVICE REQUIREMENTS FOR PIPING JOINTS

K310 GENERAL

Joints shall be suitable for the fluid handled, and for the pressure-temperature and other mechanical loadings expected in service.

K311 WELDED JOINTS

K311.1 General

Welds shall conform to the following.

(a) Welding shall be in accordance with para. K328.

(b) Preheating and heat treatment shall be in accordance with paras. K330 and K331, respectively.

(c) Examination shall be in accordance with para. K341.4, with acceptance criteria as shown in Table K341.3.2.

K311.2 Specific Requirements

K311.2.1 Backing Rings and Consumable Inserts. Backing rings shall not be used. Consumable inserts shall not be used in butt welded joints except when specified by the engineering design.

K311.2.2 Fillet Welds. Fillet welds may be used only for structural attachments in accordance with the requirements of paras. K321 and K328.5.2.

K311.2.3 Other Weld Types. Socket welds and seal welds are not permitted.

K312 FLANGED JOINTS

Flanged joints shall be selected for leak tightness, considering the requirements of para. K308, flange facing finish, and method of attachment. See also para. F312.

K312.1 Joints Using Flanges of Different Ratings

Paragraph 312.1 applies.

K313 EXPANDED JOINTS

Expanded joints are not permitted.

K314 THREADED JOINTS

K314.1 General

Except as provided in paras. K314.2 and K314.3, threaded joints are not permitted as pipeline assembly joints.

(a) Layout of piping should be such as to minimize strain on threaded joints which could adversely affect sealing.

(b) Supports shall be designed to control or minimize strain and vibration on threaded joints and seals.

K314.2 Special Threaded Joints

Special threaded joints may be used to attach flanges or fittings for joints in which the pipe end projects through the flange or fitting and is machined to form the sealing surface with a lens ring, cone ring, the mating pipe end, or other similar sealing device.

K314.3 Other Threaded Joints

Threaded joints not in accordance with para. K314.2 shall be used only for instrumentation, vents, drains, and similar purposes, and shall be not larger than DN 15 (NPS $\frac{1}{2}$). Such joints shall not be subject to bending or vibration loads.

K314.3.1 Taper-Threaded Joints. For mechanical strength, male-threaded components shall be at least Schedule 160 in nominal wall thickness. The nominal thickness of Schedule 160 piping is listed in ASME B36.10M for DN 15 (NPS $\frac{1}{2}$) and in ASME B16.11 for sizes smaller than DN 15 (NPS $\frac{1}{2}$).

K314.3.2 Straight-Threaded Joints. Threaded joints in which the tightness of the joint is provided by a seating surface other than the threads (e.g., construction shown in Fig. 335.3.3) shall be qualified as required by para. K304.7.2.

K315 TUBING JOINTS

Tubing joints of the flared, flareless, and compression type are not permitted.

K316 CAULKED JOINTS

Caulked joints are not permitted.

K317 SOLDERED AND BRAZED JOINTS

K317.1 Soldered Joints

Soldered joints are not permitted.

K317.2 Brazed Joints

(a) Braze welded joints and fillet joints made with brazing filler metal are not permitted.

(b) Brazed joints shall be made in accordance with para. K333 and shall be qualified as required by para. K304.7.2. Such application is the owner's responsibility. The melting point of brazing alloys shall be considered when exposure to fire is possible.

Copyright ASME International
Provided by IHS under license with ASME
No reproduction or networking permitted without license from IHS
Not for Resale

K318 SPECIAL JOINTS

Special joints include coupling, mechanical, and gland nut and collar types of joints.

K318.1 General

Joints may be used in accordance with para. 318.2 and the requirements for materials and components in this Chapter.

K318.2 Specific Requirements

K318.2.1 Prototype Tests. A prototype joint shall have been subjected to performance tests in accordance with para. K304.7.2(b) to determine the safety of the joint under test conditions simulating all expected service conditions. Testing shall include cyclic simulation.

K318.2.2 Prohibited Joints. Bell type and adhesive joints are not permitted.

PART 5
FLEXIBILITY AND SUPPORT

K319 FLEXIBILITY

Flexibility analysis shall be performed for each piping system. Paragraphs 319.1 through 319.7 apply, except for paras. 319.4.1(c) and 319.4.5. The computed displacement stress range shall be within the allowable displacement stress range in para. K302.3.5 and shall also be included in the fatigue analysis in accordance with para. K304.8.

K321 PIPING SUPPORT

Piping supports and methods of attachment shall be in accordance with para. 321 except as modified below, and shall be detailed in the engineering design.

K321.1.1 Objectives. Paragraph 321.1.1 applies, but substitute "Chapter" for "Code" in (1).

K321.1.4 Materials. Paragraph 321.1.4 applies, but replace (e) with the following:

(e) Attachments welded to the piping shall be of a material compatible with the piping and the service. Other requirements are specified in paras. K321.3.2 and K323.4.2(b).

K321.3.2 Integral Attachments. Paragraph 321.3.2 applies, but substitute "K321.1.4(e)" for "321.1.4(e)" and "Chapter IX" for "Chapter V."

PART 6
SYSTEMS

K322 SPECIFIC PIPING SYSTEMS

K322.3 Instrument Piping

K322.3.1 Definition. Instrument piping within the scope of this Chapter includes all piping and piping components used to connect instruments to high pressure piping or equipment. Instruments, permanently sealed fluid-filled tubing systems furnished with instruments as temperature- or pressure-responsive devices, and control piping for air or hydraulically operated control apparatus (not connected directly to the high pressure piping or equipment) are not within the scope of this Chapter.

K322.3.2 Requirements. Instrument piping within the scope of this Chapter shall be in accordance with para. 322.3.2 except that the design pressure and temperature shall be determined in accordance with para. K301, and the requirements of para. K310 shall apply. Instruments, and control piping not within the scope of this Chapter, shall be designed in accordance with para. 322.3.

K322.6 Pressure Relieving Systems

Paragraph 322.6 applies, except for para. 322.6.3.

K322.6.3 Overpressure Protection. Overpressure protection for high pressure piping systems shall conform to the following:

(a) The cumulative capacity of the pressure relieving devices shall be sufficient to prevent the pressure from rising more than 10% above the piping design pressure at the operating temperature during the relieving condition for a single relieving device or more than 16% above the design pressure when more than one device is provided, except as provided in (c) below.

(b) System protection must include one relief device set at or below the design pressure at the operating temperature for the relieving condition, with no device set to operate at a pressure greater than 105% of the design pressure, except as provided in (c) below.

(c) Supplementary pressure relieving devices provided for protection against overpressure due to fire or other unexpected sources of external heat shall be set to operate at a pressure not greater than 110% of the design pressure of the piping system and shall be capable of limiting the maximum pressure during relief to no more than 121% of the design pressure.

Copyright ASME International
Provided by IHS under license with ASME
No reproduction or networking permitted without license from IHS
Not for Resale

PART 7
MATERIALS

K323 GENERAL REQUIREMENTS

(a) Paragraph K323 states limitations and required qualifications for materials based on their inherent properties. Their use is also subject to requirements elsewhere in Chapter IX and in Table K-1.

(b) Specific attention should be given to the manufacturing process to ensure uniformity of properties throughout each piping component.

(c) See para. K321.1.4 for support materials.

K323.1 Materials and Specifications

K323.1.1 Listed Materials. Any material used in a pressure-containing piping component shall conform to a listed specification, except as provided in para. K323.1.2.

K323.1.2 Unlisted Materials. An unlisted material may be used, provided it conforms to a published specification covering chemistry, physical and mechanical properties, method and process of manufacture, heat treatment, and quality control, and otherwise meets the requirements of this Chapter. Allowable stresses shall be determined in accordance with the applicable allowable stress basis of this Chapter or a more conservative basis.

K323.1.3 Unknown Materials. Materials of unknown specification, type, or grade are not permitted.

K323.1.4 Reclaimed Materials. Reclaimed pipe and other piping components may be used provided they are properly identified as conforming to a listed specification, have documented service history for the material and fatigue life evaluation, and otherwise meet the requirements of this Chapter. Sufficient cleaning and inspection shall be made to determine minimum wall thickness and freedom from defects which would be unacceptable in the intended service.

K323.1.5 Product Analysis. Conformance of materials to the product analysis chemical requirements of the applicable specification shall be verified, and certification shall be supplied. Requirements for product analysis are defined in the applicable materials specification.

K323.1.6 Repair of Materials by Welding. A material defect may be repaired by welding, provided that all of the following criteria are met.

(a) The material specification provides for weld repair.

(b) The welding procedure and welders or welding operators are qualified as required by para. K328.2.

(c) The repair and its examination are performed in accordance with the material specification and with the owner's approval.

K323.2 Temperature Limitations

The designer shall verify that materials which meet other requirements of this Chapter are suitable for service throughout the operating temperature range. Attention is directed to Note (4) in Appendix K, and para. K323.2.1 following. [Note (7) of Appendix A explains the means used to set both cautionary and restrictive temperature limits for materials.]

K323.2.1 Upper Temperature Limits, Listed Materials. A listed material may be used at a temperature above the maximum for which a stress value is shown in Table K-1, but only if:

(a) there is no prohibition in Appendix K or elsewhere in this Chapter;

(b) the designer verifies the serviceability of the material in accordance with para. K323.2.4; and

(c) the upper temperature limit shall be less than the temperature for which an allowable stress determined in accordance with para. 302.3.2 is governed by the creep or stress rupture provisions of that paragraph.

K323.2.2 Lower Temperature Limits, Listed Materials

(a) The lowest permitted service temperature for a component or weld shall be the impact test temperature determined in accordance with para. K323.3.4(a), except as provided in (b) or (c) below.

(b) For a component or weld subjected to a longitudinal or circumferential stress ≤ 41 MPa (6 ksi), the lowest service temperature shall be the lower of −46°C (−50°F) or the impact test temperature determined in para. K323.3.4(a).

(c) For materials exempted from Charpy testing by Note (6) of Table K323.3.1, the service temperature shall not be lower than −46°C (−50°F).

K323.2.3 Temperature Limits, Unlisted Materials. An unlisted material acceptable under para. K323.1.2 shall be qualified for service at all temperatures within a stated range from design minimum temperature to design (maximum) temperature, in accordance with para. K323.2.4. The requirements of para. K323.2.1(c) also apply.

K323.2.4 Verification of Serviceability

(a) When an unlisted material is used, or when a listed material is to be used above the highest temperature for which stress values appear in Appendix K, the designer is responsible for demonstrating the validity of the allowable stresses and other design limits, and of the approach taken in using the material, including the derivation of stress data and the establishment of temperature limits.

(b) Paragraph 323.2.4(b) applies except that allowable stress values shall be determined in accordance with para. K302.3.

Copyright ASME International
Provided by IHS under license with ASME
No reproduction or networking permitted without license from IHS
Not for Resale

K323.3 Impact Testing Methods and Acceptance Criteria

K323.3.1 General. Impact testing shall be performed in accordance with Table K323.3.1 on representative samples using the testing methods described in paras. K323.3.2, K323.3.3, and K323.3.4. Acceptance criteria are described in para. K323.3.5.

K323.3.2 Procedure. Paragraph 323.3.2 applies.

K323.3.3 Test Specimens

(a) Each set of impact test specimens shall consist of three specimen bars. Impact tests shall be made using standard 10 mm (0.394 in.) square cross section Charpy V-notch specimen bars oriented in the transverse direction.

(b) Where component size and/or shape does not permit specimens as specified in (a) above, standard 10 mm square cross-section longitudinal Charpy specimens may be prepared.

(c) Where component size and/or shape does not permit specimens as specified in (a) or (b) above, subsize longitudinal Charpy specimens may be prepared. Test temperature shall be reduced in accordance with Table 323.3.4. See also Table K323.3.1, Note (6).

(d) If necessary in (a), (b), or (c) above, corners of specimens parallel to and on the side opposite the notch may be as shown in Fig. K323.3.3.

K323.3.4 Test Temperatures. For all Charpy impact tests, the test temperature criteria in (a) or (b) below shall be observed.

(a) Charpy impact tests shall be conducted at a temperature no higher than the lowest metal temperature at which a piping component or weld will be subjected to a stress greater than 41 MPa (6 ksi). In specifying the required test temperature, the following shall be considered:

(1) range of operating conditions
(2) upset conditions
(3) ambient temperature extremes
(4) required leak test temperature

(b) Where the largest possible test specimen has a width along the notch less than the lesser of 80% of the material thickness or 8 mm (0.315 in.), the test shall be conducted at a reduced temperature in accordance with Table 323.3.4, considering the temperature as reduced below the test temperature required by (a) above.

K323.3.5 Acceptance Criteria

(a) Minimum Energy Requirements for Materials Other Than Bolting. The applicable minimum impact energy requirements for materials shall be those shown in Table K323.3.5. Lateral expansion shall be measured in accordance with ASTM A 370 (for title see para. 323.3.2). The results shall be included in the impact test report.

(b) Minimum Energy Requirements for Bolting Materials. The applicable minimum energy requirements shall be those shown in Table K323.3.5 except as provided in Table K323.3.1.

(c) Weld Impact Test Requirements. Where two base metals having different required impact energy values are joined by welding, the impact test energy requirements shall equal or exceed the requirements of the base material having the lower required impact energy.

(d) Retests

(1) Retest for Absorbed Energy Criteria. When the average value of the three specimens equals or exceeds the minimum value permitted for a single specimen, and the value for more than one specimen is below the required average value, or when the value for one specimen is below the minimum value permitted for a single specimen, a retest of three additional specimens shall be made. The value for each of these retest specimens shall equal or exceed the required average value.

(2) Retest for Erratic Test Results. When an erratic result is caused by a defective specimen or uncertainty in the test, a retest will be allowed. The report giving test results shall specifically state why the original specimen was considered defective or which step of the test procedure was carried out incorrectly.

K323.4 Requirements for Materials

K323.4.1 General. Requirements in para. K323.4 apply to pressure-containing parts, not to materials used as supports, gaskets, packing, or bolting. See also Appendix F, para. F323.4.

K323.4.2 Specific Requirements

(a) Ductile iron and other cast irons are not permitted.

(b) Zinc-coated materials are not permitted for pressure containing components and may not be attached to pressure-containing components by welding.

K323.4.3 Metallic Clad and Lined Materials. Materials with metallic cladding or lining may be used in accordance with the following provisions.

(a) For metallic clad or lined piping components, the base metal shall be an acceptable material as defined in para. K323, and the thickness used in pressure design in accordance with para. K304 shall not include the thickness of the cladding or lining. The allowable stress used shall be that for the base metal at the design temperature. For such components, the cladding or lining may be any material that, in the judgment of the user, is suitable for the intended service and for the method of manufacture and assembly of the piping component.

(b) Fabrication by welding of clad or lined piping components and the inspection and testing of such components shall be done in accordance with applicable provisions of the BPV Code, Section VIII, Division 1, UCL-30 through UCL-52, and the provisions of this Chapter.

Copyright ASME International
Provided by IHS under license with ASME
No reproduction or networking permitted without license from IHS
Not for Resale

Table K323.3.1 Impact Testing Requirements

Test Characteristics		Column A Pipe, Tubes, and Components Made From Pipe or Tubes	Column B Other Components, Fittings, Etc.	Column C Bolts
Tests on Materials	Number of tests	As required by the material specification, or one test set per lot [see Note (1)], whichever is greater, except as permitted by Note (6).		
	Location and orientation of specimens [see Note (2)]	(a) Transverse to the longitudinal axis, with notch parallel to axis. [See Note (3).] (b) Where component size and/or shape does not permit specimens as specified in (a) above, paras. K323.3.3(b), (c), and (d) apply as needed.	(a) Transverse to the direction of maximum elongation during rolling or to direction of major working during forging. Notch shall be oriented parallel to direction of maximum elongation or major working. (b) If there is no single identifiable axis, e.g., for castings or triaxial forgings, specimens shall either meet the longitudinal values of Table K323.3.5, or three sets of orthogonal specimens shall be prepared, and the lowest impact values obtained from any set shall meet the transverse values of Table K323.3.5. (c) Where component size and/or shape does not permit specimens as specified in (a) or (b) above, paras. K323.3.3(c) and (d) apply as needed.	(a) Bolts ≤ 52 mm (2 in.) nominal size made in accordance with ASTM A 320 shall meet the impact requirements of that specification. (b) For all other bolts, longitudinal specimens shall be taken. The impact values obtained shall meet the transverse values of Table K323.3.5.
Tests on Welds in Fabrication or Assembly	Test pieces [see Note (5)]	Test pieces for preparation of impact specimens shall be made for each welding procedure, type of electrode, or filler metal (i.e., AWS E-XXXX classification) and each flux to be used. All test pieces shall be subject to heat treatment, including cooling rates and aggregate time at temperature or temperatures, essentially the same as the heat treatment which the finished component will have received.		
	Number of test pieces [see Note (4)]	(1) One test piece with a thickness T for each range of material thicknesses which can vary from $\frac{1}{2}T$ to $T + 6$ mm ($\frac{1}{4}$ in.). (2) Unless otherwise specified in this Chapter [see Note (3)] or the engineering design, test pieces need not be made from individual material lots, or from material for each job, provided welds in other certified material of the same thickness ranges and to the same specification (type and grade, not heat or lot) have been tested as required and the records of those tests are made available.		
	Location and orientation of specimens	(1) Weld metal impact specimens shall be taken across the weld with the notch in the weld metal. Each specimen shall be oriented so that the notch axis is normal to the surface of the material and one face of the specimen shall be within 1.5 mm ($\frac{1}{16}$ in.) of the surface of the material. (2) Heat affected zone impact specimens shall be taken across the weld and have sufficient length to locate the notch in the heat affected zone, after etching. The notch shall be cut approximately normal to the material surface in such a manner as to include as much heat affected zone material as possible in the resulting fracture. (3) The impact values obtained from both the weld metal and heat affected zone specimens shall be compared to the transverse values in Table K323.3.5 for the determination of acceptance criteria.		

Copyright ASME International
Provided by IHS under license with ASME
No reproduction or networking permitted without license from IHS
Not for Resale

Table K323.3.1 Impact Testing Requirements (Cont'd)

NOTES:
(1) A lot shall consist of pipe or components of the same nominal size, made from the same heat of material, and heat treated together. If a continuous type furnace is used, pipe or components may be considered to have been heat treated together if they are processed during a single continuous time period at the same furnace conditions.
(2) Impact tests shall be performed on a representative sample of material after completion of all heat treatment and forming operations involving plastic deformation, except that cold bends made in accordance with para. K304.2.1 need not be tested after bending.
(3) For longitudinally welded pipe, specimens shall be taken from the base metal, weld metal, and the heat affected zone.
(4) The test piece shall be large enough to permit preparing the number of specimens required by para. K323.3. If this is not possible, additional test pieces shall be prepared.
(5) For welds in the fabrication or assembly of piping or components, including repair welds.
(6) Impact tests are not required when the maximum obtainable longitudinal Charpy specimen has a width along the notch less than 2.5 mm (0.098 in.). See para. K323.2.2(c).

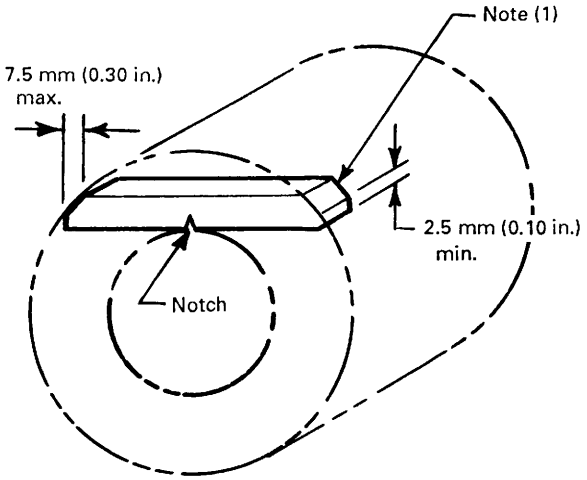

GENERAL NOTE: This Figure illustrates how an acceptable transverse Charpy specimen can be obtained from a tubing or component shape too small for a full length standard specimen in accordance with ASTM A 370. The corners of a longitudinal specimen parallel to and on the side opposite the notch may be as shown.

NOTE:
(1) Corners of the Charpy specimen [see para. K323.3.3(d)] may follow the contour of the component within the dimension limits shown.

Fig. K323.3.3 Example of an Acceptable Impact Test Specimen

(c) If a metallic liner also serves as a gasket or as part of the flange facing, the requirements and limitations in para. K308.4 apply.

K323.5 Deterioration of Materials in Service

Paragraph 323.5 applies.

K325 MISCELLANEOUS MATERIALS

Paragraph 325 applies.

PART 8
STANDARDS FOR PIPING COMPONENTS

K326 DIMENSIONS AND RATINGS OF COMPONENTS

Paragraph 326 applies in its entirety, except as follows:
(a) Refer to Table K326.1 instead of Table 326.1.
(b) Refer to Appendix K instead of Appendix A.
(c) Refer to para. K303 instead of para. 303.
(d) Refer to para. K304 instead of para. 304.

PART 9
FABRICATION, ASSEMBLY, AND ERECTION

K327 GENERAL

Piping materials and components are prepared for assembly and erection by one or more of the fabrication processes covered in paras. K328, K330, K331, K332, and K333. When any of these processes is used in assembly or erection, requirements are the same as for fabrication.

K328 WELDING

Welding which conforms to the requirements of para. K328 may be used in accordance with para. K311.

K328.1 Welding Responsibility

Each employer is responsible for the welding done by the personnel of his organization and shall conduct the tests required to qualify welding procedures, and to qualify and as necessary requalify welders and welding operators.

K328.2 Welding Qualifications

K328.2.1 Qualification Requirements. Qualification of the welding procedures to be used and of the performance of welders and welding operators shall comply with the requirements of the BPV Code, Section IX, except as modified herein.

(a) Impact tests shall be performed for all procedure qualifications in accordance with para. K323.3.

(b) Test weldments shall be made using the same specification and type or grade of base metal(s), and the

Copyright ASME International
Provided by IHS under license with ASME
No reproduction or networking permitted without license from IHS
Not for Resale

Table K323.3.5 Minimum Required Charpy V-Notch Impact Values

Specimen Orientation	Pipe Wall or Component Thickness, mm (in.)	No. of Specimens [Note (1)]	Energy, J (ft-lbf) [Note (2)] Specified Minimum Yield Strength, MPa (ksi) ≤ 932 (≤ 135)	Energy, J (ft-lbf) [Note (2)] Specified Minimum Yield Strength, MPa (ksi) > 932 (> 135)
Transverse	≤ 25 (≤ 1)	Average for 3	27 (20)	34 (25)
		Minimum for 1	20 (15)	27 (20)
	> 25 and ≤ 51 (> 1 and ≤ 2)	Average for 3	34 (25)	41 (30)
		Minimum for 1	27 (20)	33 (24)
	> 51 (> 2)	Average for 3	41 (30)	47 (35)
		Minimum for 1	33 (24)	38 (28)
Longitudinal	≤ 25 (≤ 1)	Average for 3	54 (40)	68 (50)
		Minimum for 1	41 (30)	54 (40)
	> 25 and ≤ 51 (> 1 and ≤ 2)	Average for 3	68 (50)	81 (60)
		Minimum for 1	54 (40)	65 (48)
	> 51 (> 2)	Average for 3	81 (60)	95 (70)
		Minimum for 1	65 (48)	76 (56)

NOTES:
(1) See para. K323.3.5(c) for permissible retests.
(2) Energy values in this Table are for standard size specimens. For subsize specimens, these values shall be multiplied by the ratio of the actual specimen width to that of a full-size specimen, 10 mm (0.394 in.).

same specification and classification of filler metal(s) as will be used in production welding.

(c) Test weldments shall be subjected to essentially the same heat treatment, including cooling rate and cumulative time at temperature, as the production welds.

(04) *(d)* When tensile specimens are required by Section IX, the yield strength shall also be determined, using the method required for the base metal. The yield strength of each test specimen shall be not less than the specified minimum yield strength at room temperature (S_Y) for the base metals joined. Where two base metals having different S_Y values are joined by welding, the yield strength of each test specimen shall be not less than the lower of the two S_Y values.

(e) Mechanical testing is required for all performance qualification tests.

(f) Qualification on pipe or tubing shall also qualify for plate, but qualification on plate does not qualify for pipe or tubing.

(g) For thickness greater than 51 mm (2 in.), the procedure test coupon shall be at least 75% as thick as the thickest joint to be welded in production.

(h) Paragraph 328.2.1(f) applies.

K328.2.2 Procedure Qualification by Others. Qualification of welding procedures by others is not permitted.

K328.2.3 Performance Qualification by Others. Welding performance qualification by others is not permitted.

K328.2.4 Qualification Records. Paragraph 328.2.4 applies.

K328.2.5 Performance Requalification. Requalification of welders and welding operators is required in accordance with para. K328.2.1 when:

(a) welder or welding operator has not used the specific process for a period of 6 months or more; or (04)

(b) there is specific reason to question the individual's ability to produce welds that meet the requirements of this Chapter.

K328.3 Materials

K328.3.1 Filler Metal. Filler metal shall be specified in the engineering design and shall conform to the requirements of the BPV Code, Section IX. A filler metal not yet incorporated in Section IX may be used with the owner's approval if a procedure qualification test, including an all-weld-metal test, is first successfully made.

K328.3.2 Weld Backing Material. Backing rings shall not be used.

Copyright ASME International
Provided by IHS under license with ASME
No reproduction or networking permitted without license from IHS Not for Resale

(04)

Table K326.1 Component Standards

Standard or Specification	Designation
Bolting	
Square and Hex Bolts and Screws, Inch Series; Including Hex Cap Screws and Lag Screws	ASME B18.2.1
Square and Hex Nuts (Inch Series)	ASME B18.2.2
Metallic Fittings, Valves, and Flanges	
Pipe Flanges and Flanged Fittings [Note (1)]	ASME B16.5
Factory-Made Wrought Steel Buttwelding Fittings [Note (1)]	ASME B16.9
Forged Fittings, Socket Welding and Threaded [Note (1)]	ASME B16.11
Valves—Flanged, Threaded, and Welding End [Note (1)]	ASME B16.34
Standard Marking System for Valves, Fittings, Flanges, and Unions	MSS SP-25
High Pressure Chemical Industry Flanges and Threaded Stubs for Use with Lens Gaskets	MSS SP-65
Metallic Pipe and Tubes	
Welded and Seamless Wrought Steel Pipe [Note (1)]	ASME B36.10M
Stainless Steel Pipe [Note (1)]	ASME B36.19M
Miscellaneous	
Unified Inch Screw Threads (UN and UNR Thread Form)	ASME B1.1
Specification for Threading, Gaging and Thread Inspection of Casing, Tubing, and Line Pipe Threads	API 5B
Metallic Gaskets for Pipe Flanges	ASME B16.20
Buttwelding Ends	ASME B16.25
Surface Texture (Surface Roughness, Waviness, and Lay)	ASME B46.1

GENERAL NOTE: It is not practical to refer to a specific edition of each standard throughout the Code text. Instead, the approved edition references, along with the names and addresses of the sponsoring organizations, are shown in Appendix E.

NOTE:

(1) The use of components made in accordance with these standards is permissible provided they meet all of the requirements of this Chapter.

K328.3.3 Consumable Inserts. Paragraph 328.3.3 applies, except that procedures shall be qualified as required by para. K328.2.

K328.4 Preparation for Welding

K328.4.1 Cleaning. Paragraph 328.4.1 applies.

K328.4.2 End Preparation

(a) General

(1) Butt weld end preparation is acceptable only if the surface is machined or ground to bright metal.

(2) Butt welding end preparation contained in ASME B16.25 or any other end preparation which meets the procedure qualification is acceptable. [For convenience, the basic bevel angles taken from B16.25, with some additional J-bevel angles, are shown in Fig. 328.4.2 sketches (a) and (b).]

(b) Circumferential Welds

(1) If components ends are trimmed as shown in Fig. 328.4.2 sketch (a) or (b) to accommodate consumable inserts, or as shown in Fig. K328.4.3 to correct internal misalignment, such trimming shall not result in a finished wall thickness before welding less than the required minimum wall thickness t_m.

(2) It is permissible to size pipe ends of the same nominal size to improve alignment, if wall thickness requirements are maintained.

(3) Where necessary, weld metal may be deposited on the inside or outside of the component to permit alignment or provide for machining to ensure satisfactory seating of inserts.

(4) When a butt weld joins sections of unequal wall thickness and the thicker wall is more than $1\frac{1}{2}$ times the thickness of the other, end preparation and geometry shall be in accordance with acceptable designs for unequal wall thickness in ASME B16.5.

K328.4.3 Alignment

(a) Girth Butt Welds

(1) Inside diameters of components at the ends to be joined shall be aligned within the dimensional limits in the welding procedure and the engineering design, except that no more than 1.6 mm ($\frac{1}{16}$ in.) misalignment is permitted as shown in Fig. K328.4.3.

(2) If the external surfaces of the two components are not aligned, the weld shall be tapered between the two surfaces with a slope not steeper than 1:4.

Copyright ASME International
Provided by IHS under license with ASME
No reproduction or networking permitted without license from IHS
Not for Resale

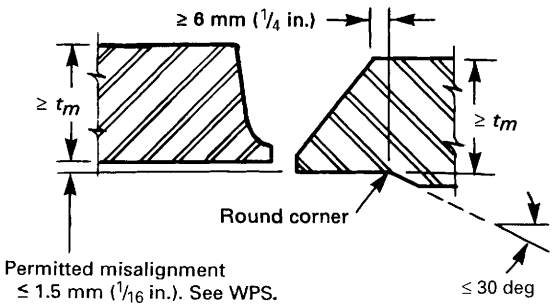

Fig. K328.4.3 Pipe Bored for Alignment: Trimming and Permitted Misalignment

(b) Longitudinal Butt Joints. Preparation for longitudinal butt welds (not made in accordance with a standard listed in Table K-1 or Table K326.1) shall conform to the requirements of para. K328.4.3(a).

(c) Branch Connection Welds

(1) The dimension m in Fig. K328.5.4 shall not exceed ±1.5 mm (1/16 in.).

(2) The dimension g in Fig. K328.5.4 shall be specified in the engineering design and the welding procedure.

K328.5 Welding Requirements

K328.5.1 General. The requirements of paras. 328.5.1 (b), (d), (e), and (f) apply in addition to the requirements specified below.

(a) All welds, including tack welds, repair welds, and the addition of weld metal for alignment [paras. K328.4.2(b)(3) and K328.4.3(c)(1)], shall be made by qualified welders or welding operators, in accordance with a qualified procedure.

(b) Tack welds at the root of the joint shall be made with filler metal equivalent to that used for the root pass. Tack welds shall be fused with the root pass weld, except that those which have cracked shall be removed. Bridge tacks (above the root) shall be removed.

K328.5.2 Fillet Welds. Fillet welds, where permitted (see para. K311.2.2), shall be fused with and shall merge smoothly into the component surfaces.

K328.5.3 Seal Welds. Seal welds are not permitted.

K328.5.4 Welded Branch Connections. Branch connection fittings (see para. 300.2), attached by smoothly contoured full penetration groove welds of a design that permits 100% interpretable radiographic examination are the only types acceptable.

Figure K328.5.4 shows acceptable details of welded branch connections. The illustrations are typical and are not intended to exclude acceptable types of construction not shown.

K328.5.5 Fabricated Laps. Fabricated laps are not permitted.

K328.6 Weld Repair

Paragraph 328.6 applies, except that procedures and performance shall be qualified as required by para. K328.2.1. See also para. K341.3.3.

K330 PREHEATING (04)

K330.1 General

The requirements in para. K330 apply to all types of welding, including tack welds and repair welds.

K330.1.1 Requirements. The necessity for preheating prior to welding, and the temperature to be used, shall be established by the engineering design. However, the preheat temperatures for the various P-Number materials shall be not less than those shown in Table 330.1.1, including those shown as "Recommended." The suitability of the preheat temperature shall also be demonstrated by the procedure qualification. For joints of dissimilar thickness, the nominal wall thickness stated in Table 330.1.1 shall be that of the thicker component at the joint.

K330.1.2 Unlisted Materials. Preheat requirements for an unlisted material shall be specified in the WPS.

K330.1.3 Temperature Verification. Preheat temperature shall be checked by use of temperature-indicating crayons, thermocouple pyrometers, or other suitable means to ensure that the temperature specified in the WPS is obtained prior to and maintained during welding. Temperature-indicating materials and techniques shall not be detrimental to the base metals.

K330.1.4 Preheat Zone. The preheat zone shall extend at least 25 mm (1 in.) beyond each edge of the weld.

K330.2 Specific Requirements

Paragraph 330.2 applies in its entirety.

K331 HEAT TREATMENT

The text introducing para. 331 applies.

K331.1 General

K331.1.1 Heat Treatment Requirements. The provisions of para. 331 and Table 331.1.1 apply, except as specified below.

(a) Heat treatment is required for all thicknesses of P-Nos. 4 and 5 materials.

(b) For welds other than longitudinal in quenched and tempered materials, when heat treatment is required by the engineering design, the temperature shall not be higher than 28°C (50°F) below the tempering temperature of the material.

Copyright ASME International
Provided by IHS under license with ASME
No reproduction or networking permitted without license from IHS
Not for Resale

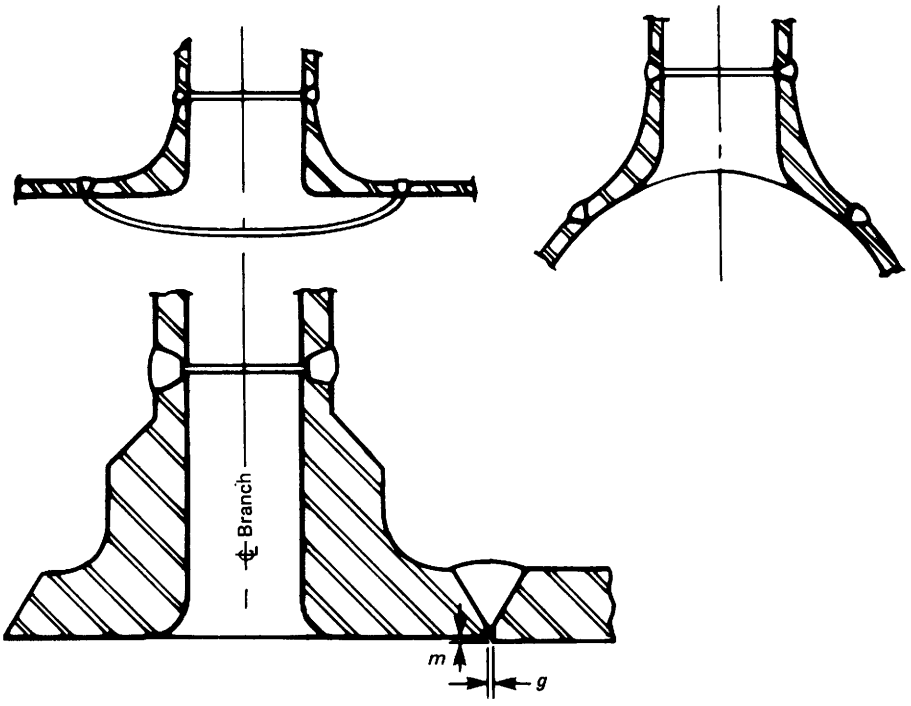

Fig. K328.5.4 Some Acceptable Welded Branch Connections Suitable for 100% Radiography

(c) Longitudinal welds in quenched and tempered material shall be heat treated in accordance with the applicable material specification.

K331.1.3 Governing Thickness. When components are joined by welding, the thickness to be used in applying the heat treatment provisions of Table 331.1.1 shall be that of the thicker component measured at the joint, except as follows.

In the case of fillet welds used for attachment of external nonpressure parts, such as lugs or other pipe-supporting elements, heat treatment is required when the thickness through the weld and base metal in any plane is more than twice the minimum material thickness requiring heat treatment (even though the thickness of the components at the joint is less than that minimum thickness) except as follows:

(a) not required for P-No. 1 materials when weld throat thickness is 16 mm ($\frac{5}{8}$ in.) or less, regardless of base metal thickness.

(b) not required for P-Nos. 3, 4, 5, 10A, and 10B materials when weld throat thickness is 6 mm ($\frac{1}{4}$ in.) or less, regardless of base metal thickness, provided that not less than the recommended minimum preheat is applied and the specified minimum tensile strength of the base metal is less than 490 MPa (71 ksi).

(c) not required for ferritic materials when welds are made with filler metal which does not air harden. Austenitic welding materials may be used for welds to ferritic materials when the effects of service conditions, such as differential thermal expansion due to elevated temperature, or corrosion, will not adversely affect the weldment.

K331.1.4 Heating and Cooling. Paragraph 331.1.4 applies.

K331.1.6 Temperature Verification. Heat treatment temperature shall be checked by thermocouple pyrometers or other suitable methods to ensure that the WPS requirements are met. Temperature-indicating materials and techniques shall not be detrimental to the base metals.

K331.1.7 Hardness Tests. Paragraph 331.1.7 applies.

K331.2 Specific Requirements

Paragraph 331.2 applies in its entirety.

K332 BENDING AND FORMING

K332.1 General

Pipe shall be hot or cold bent in accordance with a written procedure to any radius which will result in surfaces free of cracks and free of buckles. The procedure shall address at least the following, as applicable:

(a) material specification and range of size and thickness

(b) range of bend radii and fiber elongation;

(c) minimum and maximum metal temperature during bending

Copyright ASME International
Provided by IHS under license with ASME
No reproduction or networking permitted without license from IHS Not for Resale

(d) method of heating and maximum hold time
(e) description of bending apparatus and procedure to be used
(f) mandrels or material and procedure used to fill the bore
(g) method for protection of thread and machined surfaces
(h) examination to be performed
(i) required heat treatment
(j) postheat treatment dimensional adjustment technique

K332.2 Bending

K332.2.1 Bend Flattening. The difference between the maximum and the minimum diameters at any cross section of a bend shall not exceed 8% of nominal outside diameter for internal pressure and 3% for external pressure.

K332.2.2 Bending Temperature. Paragraph 332.2.2 applies, except that in cold bending of quenched and tempered ferritic materials, the temperature shall be at least 28°C (50°F) below the tempering temperature.

K332.3 Forming

Piping components shall be formed in accordance with a written procedure. The temperature range shall be consistent with material characteristics, end use, and specified heat treatment. The thickness after forming shall be not less than required by design. The procedure shall address at least the following, as applicable:
(a) material specification and range of size and thickness
(b) maximum fiber elongation expected during forming
(c) minimum and maximum metal temperature during bending
(d) method of heating and maximum hold time
(e) description of forming apparatus and procedure to be used
(f) materials and procedures used to provide internal support during forming
(g) examination to be performed
(h) required heat treatment

K332.4 Required Heat Treatment

K332.4.1 Hot Bending and Forming. After hot bending and forming, heat treatment is required for all thicknesses of P-Nos. 3, 4, 5, 6, 10A, and 10B materials that are not quenched and tempered. Times and temperatures shall be in accordance with para. 331. Quenched and tempered materials shall be reheat treated to the original material specification.

K332.4.2 Cold Bending and Forming
(a) After cold bending and forming, heat treatment in accordance with (b) below is required, regardless of thickness, when specified in the engineering design or when the maximum calculated fiber elongation exceeds 5% strain or 50% of the basic minimum specified longitudinal elongation for the applicable specification, grade, and thickness for P-Nos. 1 through 6 materials (unless it has been demonstrated that the selection of the pipe and the procedure for making the components provide assurance that the most severely formed portion of the material has retained an elongation of not less than 10%).
(b) Heat treatment is required regardless of thickness and shall conform to the temperatures and durations given in Table 331.1.1, except that for quenched and tempered materials, the stress relieving temperature shall not exceed a temperature 28°C (50°F) below the tempering temperature of the material.

K333 BRAZING AND SOLDERING

Brazing shall be in accordance with para. 333. The owner shall specify examination requirements for brazed joints.

K335 ASSEMBLY AND ERECTION

K335.1 General

Paragraph 335.1 applies.

K335.2 Flanged Joints

Paragraph 335.2 applies, except that bolts shall extend completely through their nuts.

K335.3 Threaded Joints

Paragraph 335.3 applies, except that threaded joints shall not be seal welded.

K335.4 Special Joints

Special joints (as defined in para. K318) shall be installed and assembled in accordance with the manufacturer's instructions, as modified by the engineering design. Care shall be taken to ensure full engagement of joint members.

K335.5 Cleaning of Piping

See Appendix F, para. F335.9.

PART 10
INSPECTION, EXAMINATION, AND TESTING

K340 INSPECTION

Paragraphs 340.1 through 340.4 apply.

K341 EXAMINATION

Paragraphs 341.1 and 341.2 apply.

Copyright ASME International
Provided by IHS under license with ASME
No reproduction or networking permitted without license from IHS Not for Resale

K341.3 Examination Requirements

K341.3.1 General. Prior to initial operation, each piping installation, including components and workmanship, shall be examined in accordance with para. K341.4 and the engineering design. If heat treatment is performed, examination shall be conducted after its completion.

K341.3.2 Acceptance Criteria. Acceptance criteria shall be as stated in the engineering design and shall at least meet the applicable requirements stated in (a) and (b) below, and elsewhere in this Chapter.

(a) Table K341.3.2 states acceptance criteria (limits on imperfections) for welds. See Fig. 341.3.2 for typical weld imperfections.

(b) Acceptance criteria for castings are specified in para. K302.3.3.

K341.3.3 Defective Components and Workmanship

(a) Defects (imperfections of a type or magnitude not acceptable by the criteria specified in para. K341.3.2) shall be repaired, or the defective item shall be replaced.

(b) Repaired or replaced items shall be examined as required for the original work.

K341.4 Extent of Required Examination

Piping shall be examined to the extent specified herein or to any greater extent specified in the engineering design.

K341.4.1 Visual Examination

(a) The requirements of para. 341.4.1(a) apply with the following exceptions in regard to extent of examination:

(1) Materials and Components. 100%.

(2) Fabrication. 100%.

(3) Threaded, Bolted, and Other Joints. 100%.

(4) Piping Erection. All piping erection shall be examined to verify dimensions and alignment. Supports, guides, and points of cold spring shall be checked to ensure that movement of the piping under all conditions of startup, operation, and shutdown will be accommodated without undue binding or unanticipated constraint.

(b) Pressure-Containing Threads. 100% examination for finish and fit is required. Items with visible imperfections in thread finish and/or the following defects shall be rejected:

(1) Tapered Threads. Failure to meet gaging requirements in API Std 5B.

(2) Straight Threads. Excessively loose or tight fit when gaged for light interference fit.

K341.4.2 Radiographic Examination

(a) All girth, longitudinal, and branch connection welds shall be 100% examined as specified in para. K344.5.

(b) Ultrasonic examination shall not be substituted for radiography, but may supplement it.

(c) In-process examination (see para. 344.7) shall not be substituted for radiography.

K341.4.3 Certifications and Records. Paragraph 341.4.1(c) applies.

K341.5 Supplementary Examination

Any of the examination methods described in para. K344 may be specified by the engineering design to supplement the examination required by para. K341.4. The extent of supplementary examination to be performed and any acceptance criteria that differ from those specified in para. K341.3.2 shall be specified in the engineering design.

K341.5.1 Hardness Tests. Paragraph 341.5.2 applies.

K341.5.2 Examinations to Resolve Uncertainty. Paragraph 341.5.3 applies.

K342 EXAMINATION PERSONNEL

Paragraph 342 applies in its entirety.

K343 EXAMINATION PROCEDURES

Paragraph 343 applies. See also para. 344.6.1.

K344 TYPES OF EXAMINATION

K344.1 General

Paragraphs 344.1.1 and 344.1.2 apply. In para. 344.1.3, terms other than "100% examination" apply only to supplementary examinations.

K344.2 Visual Examination

Paragraph 344.2 applies in its entirety.

K344.3 Magnetic Particle Examination

The method for magnetic particle examination shall be as specified in

(a) paragraph K302.3.3(b) for castings

(b) BPV Code, Section V, Article 7 for welds and other components

K344.4 Liquid Penetrant Examination

The method for liquid penetrant examination shall be as specified in

(a) paragraph K302.3.3(b) for castings

(b) BPV Code, Section V, Article 6 for welds and other components

K344.5 Radiographic Examination

The method for radiographic examination shall be as specified in

(a) paragraph K302.3.3(c) for castings

(b) BPV Code, Section V, Article 2 for welds and other components

Copyright ASME International
Provided by IHS under license with ASME
No reproduction or networking permitted without license from IHS
Not for Resale

Table K341.3.2 Acceptance Criteria for Welds

Type of Imperfection	Criteria (A–E) for Types of Welds, and for Required Examination Methods [Note (1)]					
	Methods		Type of Weld			
	Visual	100% Radiography	Girth Groove	Longitudinal Groove [Note (2)]	Fillet [Note (3)]	Branch Connection [Note (4)]
Crack	X	X	A	A	A	A
Lack of fusion	X	X	A	A	A	A
Incomplete penetration	X	X	A	A	A	A
Internal porosity	. . .	X	B	B	NA	B
Slag inclusion or elongated indication	. . .	X	C	C	NA	C
Undercutting	X	X	A	A	A	A
Surface porosity or exposed slag inclusion	X	. . .	A	A	A	A
Concave root surface (suck-up)	X	X	D	D	NA	D
Surface finish	X	. . .	E	E	E	E
Reinforcement or internal protrusion	X	. . .	F	F	F	F

GENERAL NOTE: X = required examination; NA = not applicable; . . . = not required.

Criterion Value Notes for Table K341.3.2

Criterion		
Symbol	Measure	Acceptable Value Limits [Note (5)]
A	Extent of imperfection	Zero (no evident imperfection)
B	Size and distribution of internal porosity	See BPV Code, Section VIII, Division 1, Appendix 4
C	Slag inclusion or elongated indication	
	Individual length	$\leq \overline{T}_w/4$ and $\leq$ 4 mm ($^5/_{32}$ in.)
	Individual width	$\leq \overline{T}_w/4$ and $\leq$ 2.5 mm ($^3/_{32}$ in.)
	Cumulative length	$\leq \overline{T}_w$ in any 12 $\overline{T}_w$ weld length
D	Depth of surface concavity	Total joint thickness including weld reinforcement, $\geq \overline{T}_w$
E	Surface roughness	$\leq$ 12.5 μm R_a (500 μin. R_a per ASME B46.1)
F	Height of reinforcement or internal protrusion [Note (6)] in any plane through the weld shall be within the limits of the applicable height value in the tabulation at the right. Weld metal shall be fused with and merge smoothly into the component surfaces.	Wall Thickness $\overline{T}_w$, mm (in.) / External Weld Reinforcement or Internal Weld Protrusion $\leq$ 13 ($^1/_2$) / 1.5 ($^1/_{16}$) > 13 ($^1/_2$) and $\leq$ 51 (2) / 3 ($^1/_8$) > 51 / 4 ($^5/_{32}$)

NOTES:
(1) Criteria given are for required examination. More stringent criteria may be specified in the engineering design.
(2) Longitudinal welds include only those permitted in paras. K302.3.4 and K305. The radiographic criteria shall be met by all welds, including those made in accordance with a standard listed in Table K326.1 or in Appendix K.
(3) Fillet welds include only those permitted in para. 311.2.5(b).
(4) Branch connection welds include only those permitted in para. K328.5.4.
(5) Where two limiting values are given, the lesser measured value governs acceptance. $\overline{T}_w$ is the nominal wall thickness of the thinner of two components joined by a butt weld.
(6) For groove welds, height is the lesser of the measurements made from the surfaces of the adjacent components. For fillet welds, height is measured from the theoretical throat; internal protrusion does not apply. Required thickness t_m shall not include reinforcement or internal protrusion.

Copyright ASME International
Provided by IHS under license with ASME
No reproduction or networking permitted without license from IHS
Not for Resale

K344.6 Ultrasonic Examination

K344.6.1 Method. The method for ultrasonic examination shall be as specified in

(a) paragraph K302.3.3(c) for castings

(b) paragraph 344.6.1 for welds and other components

(c) paragraph K344.6.2 for pipe

(04) **K344.6.2 Examination of Pipe and Tubing.** Pipe and tubing, required or selected in accordance with Table K305.1.2 to undergo ultrasonic examination, shall pass a 100% examination for longitudinal defects in accordance with ASTM E 213, Ultrasonic Examination of Metal Pipe and Tubing. The following specific requirements shall be met.

(a) A calibration (reference) standard shall be prepared from a representative sample. Longitudinal (axial) reference notches shall be introduced on the outer and inner surfaces of the standard in accordance with Fig. 2(c) of E 213 to a depth not greater than the larger of 0.1 mm (0.004 in.) or 4% of specimen thickness and a length not more than 10 times the notch depth.

(b) The pipe or tubing shall be scanned in both circumferential directions in accordance with Supplemental Requirement S1 of E 213. (Removal of external weld reinforcement of welded pipe may be necessary prior to this examination.)

K344.6.3 Acceptance Criteria. Any indication greater than that produced by the calibration notch represents a defect; defective pipe and tubing shall be rejected.

K344.6.4 Records. For pipe and tubing which passes this examination, records specified in Supplemental Requirement S5 of ASTM E 213 shall be prepared. [See para. K346.2(g).]

K344.7 In-Process Examination

Paragraph 344.7 applies in its entirety.

K344.8 Eddy Current Examination

K344.8.1 Method. The method for eddy current examination of pipe and tubing shall follow the general guidelines of the ASME BPV Code, Section V, Article 8, subject to the following specific requirements.

(a) Cold drawn austenitic stainless steel pipe and tubing, selected in accordance with Table K305.1.2 for eddy current examination, shall pass a 100% examination for longitudinal defects.

(b) A calibration (reference) standard shall be prepared from a representative sample. A longitudinal (axial) reference notch shall be introduced on the inner surface of the standard to a depth not greater than the larger of 0.1 mm (0.004 in.) or 5% of specimen thickness and a length not more than 6.4 mm (0.25 in.).

K344.8.2 Acceptance Criteria. Any indication greater than that produced by the calibration notch represents a defect; defective pipe or tubing shall be rejected.

K344.8.3 Records. For pipe and tubing which passes this examination, a report shall be prepared which includes at least the following information:

(a) material identification by type, size, lot, heat, etc.

(b) listing of examination equipment and accessories

(c) details of examination technique (including examination speed and frequency) and end effects, if any

(d) description of the calibration standard, including dimensions of the notch, as measured

(e) examination results

K345 TESTING

K345.1 Required Leak Test

Prior to initial operation, each piping system shall be leak tested.

(a) Each weld and each piping component, except bolting and individual gaskets to be used during final system assembly, shall be hydrostatically or pneumatically leak tested in accordance with para. K345.4 or K345.5, respectively. The organization conducting the test shall ensure that during the required leak testing of components and welds, adequate protection is provided to prevent injury to people and damage to property from missile fragments, shock waves, or other consequences of any failure which might occur in the pressurized system.

(b) In addition to the requirements of (a) above, a leak test of the installed piping system shall be conducted at a pressure not less than 110% of the design pressure to ensure tightness, except as provided in (c) below.

(c) If the leak test required in (a) above is conducted on the installed piping system, the additional test in (b) above is not required.

(d) For systems that are all welded, the closing weld may be leak tested in accordance with para. 345.2.3(c).

(e) None of the following leak tests may be used in lieu of the leak tests required in para. K345.1:

(1) initial service leak test (para. 345.7)

(2) sensitive leak test (para. 345.8), or

(3) alternative leak test (para. 345.9)

K345.2 General Requirements for Leak Tests

Paragraphs 345.2.3 through 345.2.7 apply. See below for paras. K345.2.1 and K345.2.2.

K345.2.1 Limitations on Pressure

(a) Through-Thickness Yielding. If the test pressure (04) would produce stress in excess of the specified minimum yield strength throughout the thickness of a component[10] at test temperature, as determined by calculation or by testing in accordance with para. K304.7.2(b), the test pressure may be reduced to the maximum pressure

[10] See para. K304.1.2, footnote 4.

Copyright ASME International
Provided by IHS under license with ASME
No reproduction or networking permitted without license from IHS
Not for Resale

that will result in a stress which will not exceed the specified minimum yield strength.

(b) The provisions of paras. 345.2.1(b) and (c) apply.

K345.2.2 Other Test Requirements. Paragraph 345.2.2 applies. In addition, the minimum metal temperature during testing shall be not less than the impact test temperature (see para. K323.3.4).

K345.3 Preparation for Leak Test

Paragraph 345.3 applies in its entirety.

K345.4 Hydrostatic Leak Test

Paragraph 345.4.1 applies. See paras. K345.4.2 and K345.4.3 below.

K345.4.2 Test Pressure for Components and Welds. The hydrostatic test pressure shall be as calculated in paras. 345.4.2(a) and (b), excluding the limitation of 6.5 for the maximum value of S_T/S, and using allowable stresses from Table K-1 in Eq. (24), rather than stress values from Table A-1.

K345.4.3 Hydrostatic Test of Piping With Vessels as a System. Paragraph 345.4.3(a) applies.

K345.5 Pneumatic Leak Test

Paragraph 345.5 applies, except para. 345.5.4. See para. K345.5.4 below.

K345.5.4 Test Pressure. The pneumatic test pressure for components and welds shall be identical to that required for the hydrostatic test in accordance with para. K345.4.2.

K345.6 Hydrostatic-Pneumatic Leak Test for Components and Welds

If a combination hydrostatic-pneumatic leak test is used, the requirements of para. K345.5 shall be met, and the pressure in the liquid-filled part of the piping shall not exceed the limits stated in para. K345.4.2.

K346 RECORDS

K346.1 Responsibility

It is the responsibility of the piping designer, the manufacturer, the fabricator, and the erector, as applicable, to prepare the records required by this Chapter and by the engineering design.

K346.2 Required Records

At least the following records, as applicable, shall be provided to the owner or the Inspector by the person responsible for their preparation:

(a) the engineering design

(b) material certifications

(c) procedures used for fabrication, welding, heat treatment, examination, and testing

(d) repair of materials including the procedure used for each, and location of repairs

(e) performance qualifications for welders and welding operators

(f) qualifications of examination personnel

(g) records of examination of pipe and tubing for longitudinal defects as specified in paras. K344.6.4 and K344.8.3

K346.3 Retention of Records

The owner shall retain one set of the required records for at least 5 years after they are received.

Copyright ASME International
Provided by IHS under license with ASME
No reproduction or networking permitted without license from IHS
Not for Resale

Copyright ASME International
Provided by IHS under license with ASME
No reproduction or networking permitted without license from IHS
Not for Resale

APPENDIX A
ALLOWABLE STRESSES AND QUALITY FACTORS FOR METALLIC PIPING AND BOLTING MATERIALS

Copyright ASME International
Provided by IHS under license with ASME
No reproduction or networking permitted without license from IHS
Not for Resale

Specification Index for Appendix A

Spec. No.	Title
ASTM	
A 36	Structural Steel
A 47	Ferritic Malleable Iron Castings
A 48	Gray Iron Castings
A 53	Pipe, Steel, Black and Hot-Dipped, Zinc Coated, Welded and Seamless
A 105	Forgings, Carbon Steel, for Piping Components
A 106	Seamless Carbon Steel Pipe for High-Temperature Service
A 126	Gray Cast Iron Castings for Valves, Flanges, and Pipe Fittings
A 134	Pipe, Steel, Electric-Fusion (Arc)-Welded (Sizes NPS 16 and Over)
A 135	Electric-Resistance-Welded Steel Pipe
A 139	Electric-Fusion (Arc)-Welded Steel Pipe (NPS 4 and Over)
A 167	Stainless and Heat-Resisting Chromium-Nickel Steel Plate, Sheet and Strip
A 179	Seamless Cold-Drawn Low-Carbon Steel Heat-Exchanger and Condenser Tubes
A 181	Forgings, Carbon Steel For General Purpose Piping
A 182	Forged or Rolled Alloy-Steel Pipe Flanges, Forged Fittings, and Valves and Parts for High-Temperature Service
A 197	Cupola Malleable Iron
A 202	Pressure Vessel Plates, Alloy Steel, Chromium-Manganese-Silicon
A 203	Pressure Vessel Plates, Alloy Steel, Nickel
A 204	Pressure Vessel Plates, Alloy Steel, Molybdenum
A 216	Steel Castings, Carbon, Suitable for Fusion Welding for High-Temperature Service
A 217	Steel Castings, Martensitic Stainless and Alloy, for Pressure-Containing Parts Suitable for High-Temperature Service
A 234	Piping Fittings of Wrought Carbon Steel and Alloy Steel for Moderate and Elevated Temperatures
A 240	Heat-Resisting Chromium and Chromium-Nickel Stainless Steel Plate, Sheet and Strip for Pressure Vessels
A 268	Seamless and Welded Ferritic Stainless Steel Tubing for General Service
A 269	Seamless and Welded Austenitic Stainless Steel Tubing for General Service
A 278	Gray Iron Castings for Pressure-Containing Parts for Temperatures Up to 650°F
A 283	Low and Intermediate Tensile Strength Carbon Steel Plates, Shapes and Bars
A 285	Pressure Vessel Plates, Carbon Steel, Low- and Intermediate-Tensile Strength
A 299	Pressure Vessel Plates, Carbon Steel, Manganese-Silicon
ASTM (Cont'd)	
A 302	Pressure Vessel Plates, Alloy Steel, Manganese-Molybdenum and Manganese-Molybdenum-Nickel
A 312	Seamless and Welded Austenitic Stainless Steel Pipe
A 333	Seamless and Welded Steel Pipe for Low-Temperature Service
A 334	Seamless and Welded Carbon and Alloy-Steel Tubes for Low-Temperature Service
A 335	Seamless Ferritic Alloy Steel Pipe for High-Temperature Service
A 350	Forgings, Carbon and Low-Alloy Steel Requiring Notch Toughness Testing for Piping Components
A 351	Steel Castings, Austenitic, Austenitic-Ferritic (Duplex) for Pressure-Containing Parts
A 352	Steel Castings, Ferritic and Martensitic, for Pressure-Containing Parts Suitable for Low-Temperature Service
A 353	Pressure Vessel Plates, Alloy Steel, 9 Percent Nickel, Double Normalized and Tempered
A 358	Electric-Fusion-Welded Austenitic Chromium-Nickel Alloy Steel Pipe for High-Temperature Service
A 369	Carbon Steel and Ferritic Alloy Steel Forged and Bored Pipe for High-Temperature Service
A 376	Seamless Austenitic Steel Pipe for High-Temperature Central-Station Service
A 381	Metal-Arc-Welded Steel Pipe for Use with High-Pressure Transmission Systems
A 387	Pressure Vessel Plates, Alloy Steel, Chromium-Molybdenum
A 395	Ferritic Ductile Iron Pressure-Retaining Castings for Use at Elevated Temperatures
A 403	Wrought Austenitic Stainless Steel Piping Fittings
A 409	Welded Large Diameter Austenitic Steel Pipe for Corrosive or High-Temperature Service
A 420	Piping Fittings of Wrought Carbon Steel and Alloy Steel for Low-Temperature Service
A 426	Centrifugally Cast Ferritic Alloy Steel Pipe for High-Temperature Service
A 451	Centrifugally Cast Austenitic Steel Pipe for High-Temperature Service
A 479	Stainless and Heat-Resisting Steel Bars and Shapes for Use in Boilers and Other Pressure Vessels
A 487	Steel Castings Suitable for Pressure Service
A 494	Castings, Nickel and Nickel Alloy
A 515	Pressure Vessel Plates, Carbon Steel, for Intermediate- and Higher-Temperature Service
A 516	Pressure Vessel Plates, Carbon Steel, for Moderate- and Lower-Temperature Service
A 524	Seamless Carbon Steel Pipe for Atmospheric and Lower Temperatures
A 537	Pressure Vessel Plates, Heat-Treated, Carbon-Manganese-Silicon Steel

--`,,```,,,,````-`-`,,`,,`,`,,`---
Copyright ASME International
Provided by IHS under license with ASME
No reproduction or networking permitted without license from IHS
Not for Resale

Specification Index for Appendix A (Cont'd) (04)

Spec. No.	Title
ASTM (Cont'd)	
A 553	Pressure Vessel Plates, Alloy Steel, Quenched and Tempered 8 and 9 Percent Nickel
A 570	Hot-Rolled Carbon Steel Sheet and Strip, Structural Quality
A 571	Austenitic Ductile Iron Castings for Pressure-Containing Parts Suitable for Low-Temperature Service
A 587	Electric-Welded Low-Carbon Steel Pipe for the Chemical Industry
A 645	Pressure Vessel Plates, 5 Percent Nickel Alloy Steel, Specially Heat Treated
A 671	Electric-Fusion-Welded Steel Pipe for Atmospheric and Lower Temperatures
A 672	Electric-Fusion-Welded Steel Pipe for High-Pressure Service at Moderate Temperatures
A 691	Carbon and Alloy Steel Pipe, Electric Fusion-Welded for High-Pressure Service at High Temperatures
A 789	Seamless and Welded Ferritic/Austenitic Stainless Steel Tubing for General Service
A 790	Seamless and Welded Ferritic/Austenitic Stainless Steel Pipe
A 815	Wrought Ferritic, Ferritic/Austenitic and Martensitic Stainless Steel Fittings
B 21	Naval Brass Rod, Bar, and Shapes
B 26	Aluminum-Alloy Sand Castings
B 42	Seamless Copper Pipe, Standard Sizes
B 43	Seamless Red Brass Pipe, Standard Sizes
B 61	Steam or Valve Bronze Castings
B 62	Composition Bronze or Ounce Metal Castings
B 68	Seamless Copper Tube, Bright Annealed
B 75	Seamless Copper Tube
B 88	Seamless Copper Water Tube
B 96	Copper-Silicon Alloy Plate, Sheet, Strip, and Rolled Bar for General Purposes and Pressure Vessels
B 98	Copper-Silicon Alloy Rod, Bar and Shapes
B 127	Nickel-Copper Alloy (UNS N04400) Plate, Sheet, and Strip
B 133	Copper Rod, Bar and Shapes
B 148	Aluminum-Bronze Castings
B 150	Aluminum-Bronze Rod, Bar and Shapes
B 152	Copper Sheet, Strip, Plate and Rolled Bar
B 160	Nickel Rod and Bar
B 161	Nickel Seamless Pipe and Tube
B 162	Nickel Plate, Sheet and Strip
B 164	Nickel-Copper Alloy Rod, Bar and Wire
B 165	Nickel-Copper Alloy (UNS N04400) Seamless Pipe and Tube
B 166	Nickel-Chromium-Iron Alloy (UNS N06600) Rod, Bar and Wire
B 167	Nickel-Chromium-Iron Alloy (UNS N06600-N06690) Seamless Pipe and Tube
B 168	Nickel-Chromium-Iron Alloy (UNS N06600-N06690) Plate, Sheet and Strip
ASTM (Cont'd)	
B 169	Aluminum Bronze Plate, Sheet, Strip, and Rolled Bar
B 171	Copper-Alloy Condenser Tube Plates
B 187	Copper Bar, Bus Bar, Rod, and Shapes
B 209	Aluminum and Aluminum-Alloy Sheet and Plate
B 210	Aluminum-Alloy Drawn Seamless Tubes
B 211	Aluminum-Alloy Bars, Rods and Wire
B 221	Aluminum-Alloy Extruded Bars, Rods, Wire, Shapes, and Tubes
B 241	Aluminum-Alloy Seamless Pipe and Seamless Extruded Tube
B 247	Aluminum-Alloy Die, Hand and Rolled Ring Forgings
B 280	Seamless Copper Tube for Air Conditioning and Refrigeration Fluid Service
B 283	Copper and Copper-Alloy Die Forgings (Hot-Pressed)
B 265	Titanium and Titanium Alloy Strip, Sheet, and Plate
B 333	Nickel-Molybdenum Alloy Plate, Sheet, and Strip
B 335	Nickel-Molybdenum Alloy Rod
B 337	Seamless and Welded Titanium and Titanium Alloy Pipe
B 345	Aluminum-Alloy Seamless Extruded Tube and Seamless Pipe for Gas and Oil Transmission and Distribution Piping Systems
B 361	Factory-Made Wrought Aluminum and Aluminum-Alloy Welding Fittings
B 366	Factory-Made Wrought Nickel and Nickel-Alloy Welding Fittings
B 381	Titanium and Titanium Alloy Forgings
B 407	Nickel-Iron-Chromium Alloy Seamless Pipe and Tube
B 409	Nickel-Iron-Chromium Alloy Plate, Sheet, and Strip
B 423	Nickel-Iron-Chromium-Molybdenum-Copper Alloy (UNS N08825 and N08221) Seamless Pipe and Tube
B 424	Nickel-Iron-Chromium-Molybdenum-Copper Alloy (UNS N08825 and N08221) Plate, Sheet and Strip
B 425	Nickel-Iron-Chromium-Molybdenum-Copper Alloy (UNS N08825 and N08221) Rod and Bar
B 435	UNS N06022, UNS N06230, and UNS R30556 Plate, Sheet, and Strip
B 443	Nickel-Chromium-Molybdenum-Columbium Alloy (UNS N06625) Plate, Sheet and Strip
B 444	Nickel-Chromium-Molybdenum-Columbium Alloy (UNS N06625) Seamless Pipe and Tube
B 446	Nickel-Chromium-Molybdenum-Columbium Alloy (UNS N06625) Rod and Bar
B 462	Forged or Rolled UNS N08020, UNS N08024, UNS N08026, and UNS N08367 Alloy Pipe Fittings, and Valves and Parts for Corrosive High-Temperature Service
B 463	Forged or Rolled UNS N08020, UNS N08026, and UNS N08024 Alloy Plate, Sheet, and Strip
B 464	Welded Chromium-Nickel-Iron-Molybdenum-Copper-Columbium Stabilized Alloy (UNS N08020) Pipe
B 466	Seamless Copper-Nickel Pipe and Tube
B 467	Welded Copper-Nickel Pipe

Copyright ASME International
Provided by IHS under license with ASME
No reproduction or networking permitted without license from IHS
Not for Resale

Specification Index for Appendix A (Cont'd)

Spec. No.	Title
ASTM (Cont'd)	
B 491	Aluminum and Aluminum Alloy Extruded Round Tubes for General-Purpose Applications
B 493	Zirconium and Zirconium Alloy Forgings
B 514	Welded Nickel-Iron-Chromium Alloy Pipe
B 517	Welded Nickel-Chromium-Iron Alloy (UNS N06600, UNS N06603, UNS N06025, and UNS N06045) Pipe
B 523	Seamless and Welded Zirconium and Zirconium Alloy Tubes
B 547	Aluminum and Aluminum-Alloy Formed and Arc-Welded Round Tube
B 550	Zirconium and Zirconium Alloy Bar and Wire
B 551	Zirconium and Zirconium Alloy Strip, Sheet, and Plate
B 564	Nickel Alloy Forgings
B 574	Low-Carbon Nickel-Molybdenum-Chromium Alloy Rod
B 575	Low-Carbon Nickel-Molybdenum-Chromium Alloy Plate, Sheet and Strip
B 581	Nickel-Chromium-Iron-Molybdenum-Copper Alloy Rod
B 582	Nickel-Chromium-Iron-Molybdenum-Copper Alloy Plate, Sheet and Strip
B 584	Copper Alloy Sand Castings for General Applications
B 619	Welded Nickel and Nickel-Cobalt Alloy Pipe
B 620	Nickel-Iron-Chromium-Molybdenum Alloy (UNS N08320) Plate, Sheet and Strip
B 621	Nickel-Iron-Chromium-Molybdenum Alloy (UNS N08320) Rod
B 622	Seamless Nickel and Nickel-Cobalt Alloy Pipe and Tube
B 625	Nickel Alloy Plate and Sheet
B 649	Ni-Fe-Cr-Mo-Cu Low Carbon Alloy (UNS N08904) and Ni-Fe-Cr-Mo-Cu-N Low Carbon Alloy UNS N08925, UNS N08031, and UNS N08926) Bar and Wire
B 658	Zirconium and Zirconium Alloy Seamless and Welded Pipe
B 675	UNS N08366 and UNS N08367 Welded Pipe
B 688	Chromium-Nickel-Molybdenum-Iron (UNS N08366 and UNS N08367) Plate, Sheet, and Strip
B 690	Iron-Nickel-Chromium-Molybdenum Alloys (UNS N08366 and UNS N08367) Seamless Pipe and Tube
B 705	Nickel-Alloy (UNS N06625 and N08825) Welded Pipe
B 725	Welded Nickel (UNS N02200/UNS N02201) and Nickel-Copper Alloy (UNS N04400) Pipe
B 729	Seamless UNS N08020, UNS N08026, UNS N08024 Nickel-Alloy Pipe and Tube
B 804	UNS N08367 Welded Pipe
E 112	Methods for Determining Average Grain Size
API	
5L	Line Pipe

GENERAL NOTE: It is not practical to refer to a specific edition of each standard throughout the Code text. Instead, the approved edition references, along with the names and addresses of the sponsoring organizations, are shown in Appendix E.

Copyright ASME International
Provided by IHS under license with ASME
No reproduction or networking permitted without license from IHS Not for Resale

NOTES FOR APPENDIX A TABLES

GENERAL NOTES:

(a) The allowable stress values, P-Number or S-Number assignments, weld joint and casting quality factors, and minimum temperatures in Tables A-1, A-1A, A-1B and A-2, together with the referenced Notes and single or double bars in the stress tables, are requirements of this Code.

(b) Notes (1) through (7) are referenced in table headings and in headings for material type and product form; Notes (8) and following are referenced in the Notes column for specific materials. Notes marked with an asterisk (*) restate requirements found in the text of the Code.

(c) At this time, metric equivalents have not been provided in Appendix A tables. To convert stress values in Table A-1 to MPa at a given temperature in °C, determine the equivalent temperature in °F and interpolate to calculate the stress value in ksi at the given temperature. Multiply that value by 6.895 to determine basic allowable stress S in MPa at the given temperature.

NOTES:

(1) *The stress values in Table A-1 and the design stress values in Table A-2 are basic allowable stresses in tension in accordance with para. 302.3.1(a). For pressure design, the stress values from Table A-1 are multiplied by the appropriate quality factor E (E_c from Table A-1A or E_j from Table A-1B). Stress values in shear and bearing are stated in para. 302.3.1(b); those in compression in para. 302.3.1(c).

(2) *The quality factors for castings E_c in Table A-1A are basic factors in accordance with para. 302.3.3(b). The quality factors for longitudinal weld joints E_j in Table A-1B are basic factors in accordance with para. 302.3.4(a). See paras. 302.3.3(c) and 302.3.4(b) for enhancement of quality factors. See also para. 302.3.1(a), footnote 1.

(3) The stress values for austenitic stainless steels in these Tables may not be applicable if the material has been given a final heat treatment other than that required by the material specification or by reference to Note (30) or (31).

(4) *Stress values printed in *italics* exceed two-thirds of the expected yield strength at temperature. Stress values in **boldface** are equal to 90% of expected yield strength at temperature. See paras. 302.3.2(d)(3) and (e).

(5) *See para. 328.2.1(f) for description of P-Number and S-Number groupings. P-Numbers are indicated by number or by a number followed by a letter (e.g., 8, or 5B, or 11A). S-Numbers are preceded by an S (e.g., S-1).

(6) *The minimum temperature shown is that design minimum temperature for which the material is normally suitable without impact testing other than that required by the material specification. However, the use of a material at a design minimum temperature below −29°C (−20°F) is established by rules elsewhere in this Code, including para. 323.2.2(a) and other impact test requirements. For carbon steels with a letter designation in the Min. Temp. column, see para. 323.2.2(b) and the applicable curve and Notes in Fig. 323.2.2A.

(7) *A single bar (|) adjacent to a stress value indicates that use of the material above (if the bar is to the right) or (if the bar is to the left) below the corresponding temperature is affected as described in a referenced Note. A single bar adjacent to the "Min. Temp." value has the same significance. A double bar (‖) adjacent to a stress value indicates that use of a material is prohibited above the corresponding temperature or above some lower temperature, depending on location (as described above) and on the referenced Note. A double bar to the left of "Min. Temp." indicates prohibition below that temperature. Where no stress values are listed, a material may be used in accordance with para. 323.2 unless prohibited by a double bar.

(8) *There are restrictions on the use of this material in the text of the Code as follows.

(a) See para. 305.2.1; temperature limits are −29°C to 186°C (−20°F to 366°F).

(b) See para. 305.2.2; pipe shall be safeguarded when used outside the temperature limits in Note (8a).

(c) See Table 323.2.2, Section B-2.

(d) See para. 323.4.2(a).

(e) See para. 323.4.2(b).

(f) See para. 309.2.1.

(g) See para. 309.2.2.

(9) *For pressure-temperature ratings of components made in accordance with standards listed in Table 326.1, see para. 326.2.1. Stress values in Table A-1 may be used to calculate ratings for unlisted components, and special ratings for listed components, as permitted by para. 303.

(9a) Component standards listed in Table 326.1 impose the following restrictions on this material when used as a forging: composition, properties, heat treatment, and grain size shall conform to this specification: manufacturing procedures, tolerances, tests, certification, and markings shall be in accordance with ASTM B 564.

(10) *This casting quality factor is applicable only when proper supplementary examination has been performed (see para. 302.3.3).

(11) *For use under this Code, radiography shall be performed after heat treatment.

(12) *Certain forms of this material, as stated in Table 323.2.2, must be impact tested to qualify for service below −29°C (−20°F). Alternatively, if provisions for impact testing are included in the material specification as supplementary requirements and are invoked, the material may be used down to the temperature at which the test was conducted in accordance with the specification.

(13) Properties of this material vary with thickness or size. Stress values are based on minimum properties for the thickness listed.

(14) For use in Code piping at the stated stress values, the required minimum tensile and yield properties must be verified by tensile test. If such tests are not required by the material specification, they shall be specified in the purchase order.

Copyright ASME International
Provided by IHS under license with ASME
No reproduction or networking permitted without license from IHS
Not for Resale

(15) These stress values are established from a consideration of strength only and will be satisfactory for average service. For bolted joints where freedom from leakage over a long period of time without retightening is required, lower stress values may be necessary as determined from the flexibility of the flange and bolts and corresponding relaxation properties.

(16) An E_j factor of 1.00 may be applied only if all welds, including welds in the base material, have passed 100% radiographic examination. Substitution of ultrasonic examination for radiography is not permitted for the purpose of obtaining an E_j of 1.00.

(17) Filler metal shall not be used in the manufacture of this pipe or tube.

(18) *This specification does not include requirements for 100% radiographic inspection. If this higher joint factor is to be used, the material shall be purchased to the special requirements of Table 341.3.2 for longitudinal butt welds with 100% radiography in accordance with Table 302.3.4.

(19) *This specification includes requirements for random radiographic inspection for mill quality control. If the 0.90 joint factor is to be used, the welds shall meet the requirements of Table 341.3.2 for longitudinal butt welds with spot radiography in accordance with Table 302.3.4. This shall be a matter of special agreement between purchaser and manufacturer.

(20) For pipe sizes ≥ DN 200 (NPS 8) with wall thicknesses ≥ Sch 140, the specified minimum tensile strength is 483 MPa (70 ksi).

(21) For material thickness > 127 mm (5 in.), the specified minimum tensile strength is 483 MPa (70 ksi).

(21a) For material thickness > 127 mm (5 in.), the specified minimum tensile strength is 448 MPa (65 ksi).

(22) The minimum tensile strength for weld (qualification) and stress values shown shall be multiplied by 0.90 for pipe having an outside diameter less than 51 mm (2 in.) and a D/t value less than 15. This requirement may be waived if it can be shown that the welding procedure to be used will consistently produce welds that meet the listed minimum tensile strength of 165 MPa (24 ksi).

(23) Lightweight aluminum alloy welded fittings conforming to dimensions in MSS SP-43 shall have full penetration welds.

(24) Yield strength is not stated in the material specification. The value shown is based on yield strengths of materials with similar characteristics.

(25) This steel may develop embrittlement after service at approximately 316°C (600°F) and higher temperature.

(26) This unstabilized grade of stainless steel increasingly tends to precipitate intergranular carbides as the carbon content increases above 0.03%. See also para. F323.4(c)(2).

(27) For temperatures above 427°C (800 °F), these stress values apply only when the carbon content is 0.04% or higher.

(28) For temperatures above 538°C (1000°F), these stress values apply only when the carbon content is 0.04% or higher.

(29) The stress values above 538°C (1000°F) listed here shall be used only when the steel's austenitic micrograin size, as defined in ASTM E 112, is No. 6 or less (coarser grain). Otherwise, the lower stress values listed for the same material, specification, and grade shall be used.

(30) For temperatures above 538°C (1000°F), these stress values may be used only if the material has been heat treated at a temperature of 1093°C (2000°F) minimum.

(31) For temperatures above 538°C (1000°F), these stress values may be used only if the material has been heat treated by heating to a minimum temperature of 1038°C (1900°F) and quenching in water or rapidly cooling by other means.

(32) Stress values shown are for the lowest strength base material permitted by the specification to be used in the manufacture of this grade of fitting. If a higher strength base material is used, the higher stress values for that material may be used in design.

(33) For welded construction with work hardened grades, use the stress values for annealed material; for welded construction with precipitation hardened grades, use the special stress values for welded construction given in the Tables.

(34) If material is welded, brazed, or soldered, the allowable stress values for the annealed condition shall be used.

(35) This steel is intended for use at high temperatures; it may have low ductility and/or low impact properties at room temperature, however, after being used above the temperature indicated by the single bar (|). See also para. F323.4(c)(4).

(36) The specification permits this material to be furnished without solution heat treatment or with other than a solution heat treatment. When the material has not been solution heat treated, the minimum temperature shall be −29°C (−20°F) unless the material is impact tested per para. 323.3.

(37) Impact requirements for seamless fittings shall be governed by those listed in this Table for the particular base material specification in the grades permitted (A 312, A 240, and A 182). When A 276 materials are used in the manufacture of these fittings, the Notes, minimum temperatures, and allowable stresses for comparable grades of A 240 materials shall apply.

(38) Deleted

(39) This material when used below −29°C (−20°F) shall be impact tested if the carbon content is above 0.10%.

(40) *This casting quality factor can be enhanced by supplementary examination in accordance with para. 302.3.3(c) and Table 302.3.3C. The higher factor from Table 302.3.3C may be substituted for this factor in pressure design equations.

(41) Design stresses for the cold drawn temper are based on hot rolled properties until required data on cold drawn are submitted.

(42) This is a product specification. No design stresses are necessary. Limitations on metal temperature for materials covered by this specification are:

Grade(s)	Metal Temperature, °C (°F)
1	−29 to 482 (−20 to 900)
2, 2H, and 2HM	−48 to 593 (−55 to 1100)
3	−29 to 593 (−20 to 1100)
4 [see Note (42a)]	−101 to 593 (−150 to 1100)
6	−29 to 427 (−20 to 800)
7 and 7M [see Note (42a)]	−101 to 593 (−150 to 1100)
8FA [see Note (39)]	−29 to 427 (−20 to 800)
8MA and 8TA	−198 to 816 (−325 to 1500)
8, 8A, and 8CA	−254 to 816 (−425 to 1500)

(42a) When used below −46°C (−50°F), this material shall be impact tested as required by A 320 for Grade L7.

(42b) This is a product specification. No design stresses are necessary. For limitations on usage, see paras. 309.2.1 and 309.2.2.

(43) *The stress values given for this material are not applicable when either welding or thermal cutting is employed [see para. 323.4.2(c)].

Copyright ASME International
Provided by IHS under license with ASME
No reproduction or networking permitted without license from IHS
Not for Resale

(44) This material shall not be welded.

(45) Stress values shown are applicable for "die" forgings only.

(46) The letter "a" indicates alloys which are not recommended for welding and which, if welded, must be individually qualified. The letter "b" indicates copper base alloys which must be individually qualified.

(47) If no welding is employed in fabrication of piping from these materials, the stress values may be increased to 230 MPa (33.3 ksi).

(48) The stress value to be used for this gray cast iron material at its upper temperature limit of 232°C (450°F) is the same as that shown in the 204°C (400°F) column.

(49) If the chemical composition of this Grade is such as to render it hardenable, qualification under P-No. 6 is required.

(50) This material is grouped in P-No. 7 because its hardenability is low.

(51) This material may require special consideration for welding qualification. See the BPV Code, Section IX, QW/QB-422. For use in this Code, a qualified WPS is required for each strength level of material.

(52) Copper-silicon alloys are not always suitable when exposed to certain media and high temperature, particularly above 100°C (212°F). The user should satisfy himself that the alloy selected is satisfactory for the service for which it is to be used.

(53) Stress relief heat treatment is required for service above 232°C (450°F).

(54) The maximum operating temperature is arbitrarily set at 260°C (500°F) because hard temper adversely affects design stress in the creep rupture temperature ranges.

(55) Pipe produced to this specification is not intended for high temperature service. The stress values apply to either nonexpanded or cold expanded material in the as-rolled, normalized, or normalized and tempered condition.

(56) Because of thermal instability, this material is not recommended for service above 427°C (800°F).

(57) Conversion of carbides to graphite may occur after prolonged exposure to temperatures over 427°C (800°F). See para. F323.4(b)(2).

(58) Conversion of carbides to graphite may occur after prolonged exposure to temperatures over 468°C (875°F). See para. F323.4(b)(3).

(59) For temperatures above 482°C (900°F), consider the advantages of killed steel. See para. F323.4(b)(4).

(60) For all design temperatures, the maximum hardness shall be Rockwell C35 immediately under the thread roots. The hardness shall be taken on a flat area at least 3 mm ($\frac{1}{8}$ in.) across, prepared by removing threads. No more material than necessary shall be removed to prepare the area. Hardness determination shall be made at the same frequency as tensile tests.

(61) Annealed at approximately 982°C (1800°F).

(62) Annealed at approximately 1121°C (2050°F).

(63) For stress relieved tempers (T351, T3510, T3511, T451, T4510, T4511, T651, T6510, T6511), stress values for material in the listed temper shall be used.

(64) The minimum tensile strength of the reduced section tensile specimen in accordance with the BPV Code, Section IX, QW-462.1, shall not be less than 758 MPa (110.0 ksi).

(65) The minimum temperature shown is for the heaviest wall permissible by the specification. The minimum temperature for lighter walls shall be as shown in the following tabulation:

Impact Test Temp. (°C) for Plate Thicknesses Shown

Spec. No. & Grade	25 mm Max.	51 mm Max.	Over 51 to 76 mm
A 203 A	–68	–68	–59
A 203 B	–68	–68	–59
A 203 D	–101	–101	–87
A 203 E	–101	–101	–87

Impact Test Temp. (°F) for Plate Thicknesses Shown

Spec. No. & Grade	1 in. Max.	2 in. Max.	Over 2 in. to 3 in.
A 203 A	–90	–90	–75
A 203 B	–90	–90	–75
A 203 D	–150	–150	–125
A 203 E	–150	–150	–125

(66) Stress values shown are 90% of those for the corresponding core material.

(67) For use under this Code, the heat treatment requirements for pipe manufactured to A 671, A 672, and A 691 shall be as required by para. 331 for the particular material being used.

(68) The tension test specimen from plate 12.7 mm ($\frac{1}{2}$ in.) and thicker is machined from the core and does not include the cladding alloy; therefore, the stress values listed are those for materials less than 12.7 mm.

(69) This material may be used only in nonpressure applications.

(70) Alloy 625 (UNS N06625) in the annealed condition is subject to severe loss of impact strength at room temperature after exposure in the range of 538°C to 760°C (1000°F to 1400°F).

(71) These materials are normally microalloyed with Cb, V, and/or Ti. Supplemental specifications agreed to by manufacturer and purchaser commonly establish chemistry more restrictive than the base specification, as well as plate rolling specifications and requirements for weldability (i.e., C-equivalent) and toughness.

(72) For service temperature > 454°C (850°F), weld metal shall have a carbon content > 0.05%.

(73) Heat treatment is required after welding for all products of zirconium Grade R60705. See Table 331.1.1.

(74) Mechanical properties of fittings made from forging stock shall meet the requirements of one of the bar, forging, or rod specifications listed in Table 1 of B 366.

(75) Stress values shown are for materials in the normalized and tempered condition, or when the heat treatment is unknown. If material is annealed, use the following values above 510°C (950°F):

Temp., °F	1000	1050	1100	1150	1200
S, ksi	8.0	5.7	3.8	2.4	1.4

Copyright ASME International
Provided by IHS under license with ASME
No reproduction or networking permitted without license from IHS
Not for Resale

(76) Hydrostatic testing is an option (not required) in this specification. For use under this Code, hydrostatic testing is required.

(77) The pipe grades listed below, produced in accordance with CSA (Canadian Standards Association) Z245.1, shall be considered as equivalents to API 5L and treated as listed materials.

Grade Equivalents

API 5L	CSA Z245.1
A25	172
A	207
B	241
X42	290
X46	317
X52	359
X56	386
X60	414
X65	448
X70	483
X80	550

--`,,```,,,,````-`-`,,`,,`,`,,`---

Copyright ASME International
Provided by IHS under license with ASME
No reproduction or networking permitted without license from IHS Not for Resale

Table A-1 Basic Allowable Stresses in Tension for Metals[1]

Numbers in Parentheses Refer to Notes for Appendix A Tables; Specifications Are ASTM Unless Otherwise Indicated

Material	Spec. No.	P-No. or S-No. (5)	Grade	Notes	Min. Temp., °F (6)	Specified Min. Strength, ksi		Basic Allowable Stress *S*, ksi (1), at Metal Temperature, °F (7)						
						Tensile	Yield	Min. Temp. to 100	200	300	400	500	600	650
Iron Castings (2)														
Gray	A 48	...	20	(8e)(48)	−20	20	...	2.0	2.0	2.0	2.0	...	...	...
Gray	A 278													
Gray	A 126	...	A	(8e)(9)(48)	−20	21	...	2.0	2.0	2.0	2.0	...	...	...
Gray	A 48	...	25	(8e)(48)	−20	25	...	2.5	2.5	2.5	2.5	...	...	...
Gray	A 278													
Gray	A 48	...	30	(8e)(48)	−20	30	...	3.0	3.0	3.0	3.0	...	...	...
Gray	A 278													
Gray	A 126	...	B	(8e)(9)(48)	−20	31	...	3.0	3.0	3.0	3.0	...	...	...
Gray	A 48	...	35	(8e)(48)	−20	35	...	3.5	3.5	3.5	3.5	...	...	...
Gray	A 278													
Gray	A 48	...	40	(8e)(9)(48)	−20	40	...	4.0	4.0	4.0	4.0	...	...	...
Gray	A 126	...	C	(8e)(9)(48)	−20	41	...	4.0	4.0	4.0	4.0	...	...	...
Gray	A 278	...	40	(8e)(9)(53)	−20	40	...	4.0	4.0	4.0	4.0	4.0	4.0	4.0
Gray	A 48	...	45	(8e)(48)	−20	45	...	4.5	4.5	4.5	4.5	...	...	...
Gray	A 48	...	50	(8e)(48)	−20	50	...	5.0	5.0	5.0	5.0	...	...	...
Gray	A 278	...	50	(8e)(53)	−20	50	...	5.0	5.0	5.0	5.0	5.0	5.0	5.0
Gray	A 48	...	55	(8e)(48)	−20	55	...	5.5	5.5	5.5	5.5	...	...	...
Gray	A 48	...	60	(8e)(48)	−20	60	...	6.0	6.0	6.0	6.0	...	...	...
Gray	A 278	...	60	(8e)(53)	−20	60	...	6.0	6.0	6.0	6.0	6.0	6.0	6.0
Cupola malleable	A 197	...	...	(8e)(9)	−20	40	30	8.0	8.0	8.0	8.0	8.0	8.0	8.0
Malleable	A 47	...	32510	(8e)(9)	−20	50	32.5	10.0	10.0	10.0	10.0	10.0	10.0	10.0
Ferritic ductile	A 395	...	...	(8d)(9)	−20	60	40	20.0	19.0	17.9	16.9	15.9	14.9	14.1
Austenitic ductile	A 571	...	Type D-2M, Cl.1	(8d)	−20	65	30	20.0	...	...	...	...	...	...

Copyright ASME International
Provided by IHS under license with ASME
No reproduction or networking permitted without license from IHS
Not for Resale

Table A-1 Basic Allowable Stresses in Tension for Metals[1] (Cont'd)

Numbers in Parentheses Refer to Notes for Appendix A Tables; Specifications Are ASTM Unless Otherwise Indicated

Material	Spec. No.	P-No. or S-No. (5)	Grade	Notes	Min. Temp., °F (6)	Specified Min. Strength, ksi		Min. Temp. to 100	200	300
						Tensile	Yield			
Carbon Steel Pipes and Tubes (2)										
A 285 Gr. A	A 134	1	...	(8b)(57)	B	45	24	15.0	14.6	14.2
A 285 Gr. A	A 672	1	A45	(57)(59)(67)	B	45	24	15.0	14.6	14.2
Butt weld	API 5L	S-1	A25	(8a)	−20	45	25	15.0	15.0	14.5
Smls & ERW	API 5L	S-1	A25	(57)(59)	B	45	25	15.0	15.0	14.5
...	A 179	1	...	(57)(59)	−20	47	26	15.7	15.0	14.2
Type F	A 53	1	A	(8a)(77)	20	48	30	16.0	16.0	16.0
...	A 139	S-1	A	(8b)(77)	A	48	30	16.0	16.0	16.0
...	A 587	1	...	(57)(59)	−20	48	30	16.0	16.0	16.0
...	A 53	1	A	(57)(59)	B	48	30	16.0	16.0	16.0
...	A 106	1	A	(57)						
...	A 135	1	A	(57)(59)						
...	A 369	1	FPA	(57)						
...	API 5L	S-1	A	(57)(59)(77)						
A 285 Gr. B	A 134	1	...	(8b)(57)	B	50	27	16.7	16.4	16.0
A 285 Gr. B	A 672	1	A50	(57)(59)(67)	B	50	27	16.7	16.4	16.0
A 285 Gr. C	A 134	1	...	(8b)(57)	A	55	30	18.3	18.3	17.7
...	A 524	1	II	(57)	−20	55	30	18.3	18.3	17.7
...	A 333	1	1	(57)(59)	−50	55	30	18.3	18.3	17.7
...	A 334	1	1							
A 285 Gr. C	A 671	1	CA55	(59)(67)	A	55	30	18.3	18.3	17.7
A 285 Gr. C	A 672	1	A55	(57)(59)(67)	A					
A 516 Gr. 55	A 672	1	C55	(57)(67)	C					
A 516 Gr. 60	A 671	1	CC60	(57)(67)	C	60	32	20.0	19.5	18.9
A 515 Gr. 60	A 671	1	CB60	(57)(67)	B	60	32	20.0	19.5	18.9
A 515 Gr. 60	A 672	1	B60							
A 516 Gr. 60	A 672	1	C60	(57)(67)	C					
...	A 139	S-1	B	(8b)	A	60	35	20.0	20.0	20.0
...	A 135	1	B	(57)(59)	B	60	35	20.0	20.0	20.0
...	A 524	1	I	(57)	−20					
...	A 53	1	B	(57)(59)	B	60	35	20.0	20.0	20.0
...	A 106	1	B	(57)						
...	A 333	1	6	(57)	−50					
...	A 334									
...	A 369	1	FPB	(57)	−20					
...	A 381	S-1	Y35	...	A					
...	API 5L	S-1	B	(57)(59)(77)	B					

Copyright ASME International
Provided by IHS under license with ASME
No reproduction or networking permitted without license from IHS
Not for Resale

Table A-1 Basic Allowable Stresses in Tension for Metals[1] (Cont'd)

Numbers in Parentheses Refer to Notes for Appendix A Tables; Specifications Are ASTM Unless Otherwise Indicated

Basic Allowable Stress *S*, ksi (1), at Metal Temperature, °F (7)														
400	500	600	650	700	750	800	850	900	950	1000	1050	1100	Grade	Spec. No.
														Carbon Steel Pipes and Tubes (2)
13.7	13.0	11.8	11.6	11.5	10.3	9.0	7.8	6.5	. . .	. . .	. . .	. . .	. . .	A 134
13.7	13.0	11.8	11.6	11.5	10.3	9.0	7.8	6.5	4.5	2.5	1.6	1.0	A45	A 672
13.8	. . .	. . .	. . .	. . .	. . .	. . .	. . .	. . .	. . .	. . .	. . .	. . .	A25	API 5L
13.8	. . .	. . .	. . .	. . .	. . .	. . .	. . .	. . .	. . .	. . .	. . .	. . .	A25	API 5L
13.5	12.8	12.1	11.8	11.5	10.6	9.2	7.9	6.5	4.5	2.5	1.6	1.0	. . .	A 179
16.0	. . .	. . .	. . .	. . .	. . .	. . .	. . .	. . .	. . .	. . .	. . .	. . .	A	A 53
. . .	. . .	. . .	. . .	. . .	. . .	. . .	. . .	. . .	. . .	. . .	. . .	. . .	A	A 139
16.0	16.0	14.8	14.5	14.4	10.7	9.3	7.9	. . .	. . .	. . .	. . .	. . .	. . .	A 587
16.0	16.0	14.8	14.5	14.4	10.7	9.3	7.9	6.5	4.5	2.5	1.6	1.0	A	A 53
													A	A 106
													A	A 135
													FPA	A 369
													A	API 5L
15.4	14.6	13.3	13.1	13.0	11.2	9.6	8.1	6.5	. . .	. . .	. . .	. . .	. . .	A 134
15.4	14.6	13.3	13.1	13.0	11.2	9.6	8.1	6.5	4.5	2.5	1.6	1.0	A 50	A 672
17.2	16.2	14.8	14.5	14.4	12.0	10.2	8.3	6.5	. . .	. . .	. . .	. . .	. . .	A 134
17.2	16.2	14.8	14.5	14.4	12.0	10.2	8.3	6.5	4.5	2.5	. . .	. . .	II	A 524
17.2	16.2	14.8	14.5	14.4	12.0	10.2	8.3	6.5	4.5	2.5	1.6	1.0	1	A 333
													1	A 334
													CA55	A 671
													A55	A 672
17.2	16.2	14.8	14.5	14.4	12.1	10.2	8.4	6.5	4.5	2.5	1.6	1.0	C55	A 672
18.3	17.3	15.8	15.5	15.4	13.0	10.8	8.7	6.5	4.5	2.5	. . .	. . .	CC60	A 671
18.3	17.3	15.8	15.5	15.4	13.0	10.8	8.7	6.5	4.5	2.5	1.6	1.0	CB60	A 671
													B60	A 672
													C60	A 672
. . .	. . .	. . .	. . .	. . .	. . .	. . .	. . .	. . .	. . .	. . .	. . .	. . .	B	A 139
20.0	18.9	17.3	17.0	16.5	13.0	10.8	8.7	6.5	4.5	2.5	. . .	. . .	B	A 135
													I	A 524
20.0	18.9	17.3	17.0	16.5	13.0	10.8	8.7	6.5	4.5	2.5	1.6	1.0	B	A 53
													B	A 106
													6	A 333
													6	A 334
													FPB	A 369
													Y35	A 381
													B	API 5L

Copyright ASME International
Provided by IHS under license with ASME
No reproduction or networking permitted without license from IHS
Not for Resale

Table A-1 Basic Allowable Stresses in Tension for Metals[1] (Cont'd)

Numbers in Parentheses Refer to Notes for Appendix A Tables; Specifications Are ASTM Unless Otherwise Indicated

Material	Spec. No.	P-No. or S-No. (5)	Grade	Notes	Min. Temp., °F (6)	Specified Min. Strength, ksi		Min. Temp. to 100	200	300
						Tensile	Yield			
Carbon Steel (Cont'd)										
Pipes and Tubes (2) (Cont'd)										
...	A 139	S-1	C	(8b)	A	60	42			
...	A 139	S-1	D	(8b)	A	60	46	20.0	20.0	20.0
...	API 5L	S-1	X42	(55)(77)	A	60	42	20.0	20.0	20.0
...	A 381	S-1	Y42	...	A	60	42	20.0	20.0	20.0
...	A 381	S-1	Y48	...	A	62	48	20.6	19.7	18.7
...	API 5L	S-1	X46	(55)(77)	A	63	46	21.0	21.0	21.0
...	A 381	S-1	Y46	...	A	63	46	21.0	21.0	21.0
...	A 381	S-1	Y50	...	A	64	50	21.3	20.3	19.3
A 516 Gr. 65	A 671	1	CC65	(57)(67)	B	65	35	21.7	21.3	20.7
A 515 Gr. 65	A 671	1	CB65							
A 515 Gr. 65	A 672	1	B65	(57)(67)	A	65	35	21.7	21.3	20.7
A 516 Gr. 65	A 672	1	C65	(57)(67)	B					
...	A 139	S-1	E	(8b)	A	66	52	22.0	22.0	22.0
...	API 5L	S-1	X52	(55)(77)	A	66	52	22.0	22.0	22.0
...	A 381	S-1	Y52	...	A	66	52	22.0	22.0	22.0
A 516 Gr. 70	A 671	1	CC70	(57)(67)	B	70	38	23.3	23.1	22.5
A 515 Gr. 70	A 671	1	CB70							
A 515 Gr. 70	A 672	1	B70	(57)(67)	A	70	38	23.3	23.1	22.5
A 516 Gr. 70	A 672	1	C70	(57)(67)	B					
...	A 106	1	C	(57)	B	70	40	23.3	23.3	23.3
A 537 Cl. 1 ($\leq 2\frac{1}{2}$ in. thick)	A 671	1	CD70							
A 537 Cl. 1 ($\leq 2\frac{1}{2}$ in. thick)	A 672	1	D70	(67)	D	70	50	23.3	23.3	22.9
A 537 Cl. 1 ($\leq 2\frac{1}{2}$ in. thick)	A 691	1	CMSH70							
...	API 5L	S-1	X56	(51)(55)(71)(77)	A	71	56	23.7	23.7	23.7
...	A 381	S-1	Y56	(51)(55)(71)	A	71	56	23.7	23.7	23.7
A 299 (> 1 in. thick)	A 671	1	CK75							
A 299 (> 1 in. thick)	A 672	1	N75	(57)(67)	A	75	40	25.0	24.4	23.7
A 299 (> 1 in. thick)	A 691	1	CMS75							
A 299 ($\leq$ 1 in. thick)	A 671	1	CK75							
A 299 ($\leq$ 1 in. thick)	A 672	1	N75	(57)(67)	A	75	42	25.0	25.0	24.8
A 299 ($\leq$ 1 in. thick)	A 691	1	CMS75							

Copyright ASME International
Provided by IHS under license with ASME
No reproduction or networking permitted without license from IHS
Not for Resale

Table A-1 Basic Allowable Stresses in Tension for Metals[1] (Cont'd)

Numbers in Parentheses Refer to Notes for Appendix A Tables; Specifications Are ASTM Unless Otherwise Indicated

Basic Allowable Stress *S*, ksi (1), at Metal Temperature, °F (7)														
400	500	600	650	700	750	800	850	900	950	1000	1050	1100	Grade	Spec. No.
														Carbon Steel (Cont'd) Pipes and Tubes (2) (Cont'd)
													C	A 139
...	...	...	...	...	...	...	...	...	...	...	...	...	D	A 139
20.0‖	...	...	...	...	...	...	...	...	...	...	...	...	X42	API 5L
20.0	...	...	...	...	...	...	...	...	...	...	...	...	Y42	A 381
17.8	16.9	16.0	15.5	...	...	...	...	...	...	...	...	...	Y48	A 381
21.0‖	...	...	...	...	...	...	...	...	...	...	...	...	X46	API 5L
21.0	...	...	...	...	...	...	...	...	...	...	...	...	Y46	A 381
18.4	17.4	16.5	16.0	...	...	...	...	...	...	...	...	...	Y50	A 381
20.0	18.9	17.3	17.0	16.8	13.9	11.4	9.0	6.5	4.5	2.5	...	...	CC65	A 671
													CB65	A 671
20.0	18.9	17.3	17.0	16.8	13.9	11.4	9.0	6.5	4.5	2.5	1.6	1.0	B65	A 672
													C65	A 672
...	...	...	...	...	...	...	...	...	...	...	...	...	E	A 139
22.0‖	...	...	...	...	...	...	...	...	...	...	...	...	X52	API 5L
22.0	...	...	...	...	...	...	...	...	...	...	...	...	Y52	A 381
21.7	20.5	18.7	18.4	18.3	14.8	12.0	9.3	6.5	4.5	2.5	...	...	CC70	A 671
													CB70	A 671
21.7	20.5	18.7	18.4	18.3	14.8	12.0	9.3	6.5	4.5	2.5	1.6	1.0	B70	A 672
													C70	A 672
22.9	21.6	19.7	19.4	19.2	14.8	12.0	...	...	...	...	...	...	C	A 106
													CD70	A 671
22.9	22.9	22.6	22.0	21.4	...	...	...	...	...	...	...	...	D70	A 672
													CMSH70	A 691
23.7‖	...	...	...	...	...	...	...	...	...	...	...	...	X56	API 5L
23.7	...	...	...	...	...	...	...	...	...	...	...	...	Y56	A 381
													CK75	A 671
22.9	21.6	19.7	19.4	19.2	15.7	12.6	9.5	6.5	4.5	2.5	1.6	1.0	N75	A 672
													CMS75	A 691
													CK75	A 671
24.0	22.7	20.7	20.4	20.2	...	...	...	...	...	...	...	...	N75	A 672
													CMS75	A 691

Copyright ASME International
Provided by IHS under license with ASME
No reproduction or networking permitted without license from IHS
Not for Resale

Table A-1 Basic Allowable Stresses in Tension for Metals[1] (Cont'd)

Numbers in Parentheses Refer to Notes for Appendix A Tables; Specifications Are ASTM Unless Otherwise Indicated

Material	Spec. No.	P-No. or S-No. (5)	Grade	Notes	Min. Temp., °F (6)	Specified Min. Strength, ksi		Min. Temp. to 100	200	300
						Tensile	Yield			
Carbon Steel (Cont'd)										
Pipes and Tubes (2) (Cont'd)										
. . .	API 5L	S-1	X60	(51)(55)(71)(77)	A	75	60	25.0	25.0	25.0
. . .	API 5L	S-1	X65	(51)(55)(71)	A	77	65	25.7	25.7	25.7
. . .	API 5L	S-1	X70	(51)(55)(71)	A	82	70	27.3	27.3	27.3
. . .	API 5L	S-1	X80	(51)(55)(71)	A	90	80	30.0	30.0	30.0
. . .	A 381	S-1	Y60	(51)(71)	A	75	60	25.0	25.0	25.0
Pipes (Structural Grade) (2)										
A 283 Gr. A	A 134	1	. . .	(8a)(8c)	−20	45	24	13.7	13.0	12.4
A 570 Gr. 30	A 134	S-1	. . .	(8a)(8c)	−20	49	30	15.0	15.0	15.0
A 283 Gr. B	A 134	1	. . .	(8a)(8c)	−20	50	27	15.3	14.4	13.9
A 570 Gr. 33	A 134	S-1	. . .	(8a)(8c)	−20	52	33	15.9	15.9	15.9
A 570 Gr. 36	A 134	S-1	. . .	(8a)(8c)	−20	53	36	16.3	16.3	16.3
A 570 Gr. 40	A 134	1	. . .	(8a)(8c)	−20	55	40	16.9	16.9	16.9
A 36	A 134	1	. . .	(8a)(8c)	−20	58	36	17.6	16.8	16.8
A 283 Gr. D	A 134	1	. . .	(8a)(8c)	−20	60	33	18.4	17.4	16.6
A 570 Gr. 45	A 134	S-1	. . .	(8a)(8c)	−20	60	45	18.4	18.4	18.4
A 570 Gr. 50	A 134	1	. . .	(8a)(8c)	−20	65	50	19.9	19.9	19.9
Plates and Sheets										
. . .	A 285	1	A	(57)(59)	B	45	24	15.0	14.6	14.2
. . .	A 285	1	B	(57)(59)	B	50	27	16.7	16.4	16.0
. . .	A 516	1	55	(57)	C	55	30	18.3	18.3	17.7
. . .	A 285	1	C	(57)(59)	A	55	30	18.3	18.3	17.7
. . .	A 516	1	60	(57)	C	60	32	20.0	19.5	18.9
. . .	A 515	1	60	(57)	B	60	32	20.0	19.5	18.9
. . .	A 516	1	65	(57)	B	65	35	21.7	21.3	20.7
. . .	A 515	1	65	(57)	A	65	35	21.7	21.3	20.7
. . .	A 516	1	70	(57)	B	70	38	23.3	23.1	22.5
. . .	A 515	1	70	(57)	A	70	38	23.3	23.1	22.5
(≤ $2\frac{1}{2}$ in. thick)	A 537	1	Cl. 1	. . .	D	70	50	23.3	23.3	22.9
(> 1 in. thick)	A 299	1	. . .	(57)	A	75	40	25.0	24.4	23.7
(≤ 1 in. thick)	A 299	1	. . .	(57)	A	75	42	25.0	25.0	24.8

Copyright ASME International
Provided by IHS under license with ASME
No reproduction or networking permitted without license from IHS
Not for Resale

Table A-1 Basic Allowable Stresses in Tension for Metals[1] (Cont'd)

Numbers in Parentheses Refer to Notes for Appendix A Tables; Specifications Are ASTM Unless Otherwise Indicated

Basic Allowable Stress *S*, ksi (1), at Metal Temperature, °F (7)														
400	500	600	650	700	750	800	850	900	950	1000	1050	1100	Grade	Spec. No.
													Carbon Steel (Cont'd) Pipes and Tubes (2) (Cont'd)	
25.0	...	...	...	...	...	...	...	...	...	...	...	...	X60	API 5L
25.7	...	...	...	...	...	...	...	...	...	...	...	...	X65	API 5L
27.3	...	...	...	...	...	...	...	...	...	...	...	...	X70	API 5L
30.0	...	...	...	...	...	...	...	...	...	...	...	...	X80	API 5L
25.0	...	...	...	...	...	...	...	...	...	...	...	...	X60	A 381
													Pipes (Structural Grade) (2)	
11.8	...	...	...	...	...	...	...	...	...	...	...	...	...	A 134
15.0	...	...	...	...	...	...	...	...	...	...	...	...	...	A 134
...	...	...	...	...	...	...	...	...	...	...	...	...	...	A 134
15.9	...	...	...	...	...	...	...	...	...	...	...	...	...	A 134
16.3	...	...	...	...	...	...	...	...	...	...	...	...	...	A 134
16.9	...	...	...	...	...	...	...	...	...	...	...	...	...	A 134
16.8	...	...	...	...	...	...	...	...	...	...	...	...	...	A 134
...	...	...	...	...	...	...	...	...	...	...	...	...	...	A 134
18.4	...	...	...	...	...	...	...	...	...	...	...	...	...	A 134
19.9	...	...	...	...	...	...	...	...	...	...	...	...	...	A 134
													Plates and Sheets	
13.7	13.0	11.8	11.6	11.5	10.2	9.0	7.7	6.5	4.5	2.5	1.6	1.0	A	A 285
15.4	14.6	13.3	13.1	13.0	11.1	9.6	8.0	6.5	4.5	2.5	1.6	1.0	B	A 285
17.2	16.2	14.8	14.5	14.4	12.0	10.2	8.3	...	...	...	...	...	55	A 516
17.2	16.2	14.8	14.5	14.4	12.0	10.2	8.3	6.5	4.5	2.5	1.6	1.0	C	A 285
18.3	17.3	15.8	15.5	15.4	12.9	10.8	8.6	...	...	...	...	...	60	A 516
18.3	17.3	15.8	15.5	15.4	12.9	10.8	8.6	6.5	4.5	2.5	...	...	60	A 515
20.0	18.9	17.3	17.0	16.8	13.8	11.4	8.9	...	...	...	...	...	65	A 516
20.0	18.9	17.3	17.0	16.8	13.8	11.4	8.9	6.5	4.5	2.5	...	...	65	A 515
21.7	20.5	18.7	18.4	18.3	14.7	12.0	9.2	...	...	...	...	...	70	A 516
21.7	20.5	18.7	18.4	18.3	14.7	12.0	9.2	6.5	4.5	2.5	...	...	70	A 515
22.9	22.9	22.6	22.0	21.4	...	...	...	...	...	...	...	...	Cl. 1	A 537
22.9	21.6	19.7	19.4	19.2	15.6	12.6	9.5	6.5	4.5	2.5	1.6	1.0	...	A 299
24.0	22.7	20.7	20.4	20.2	15.6	12.6	9.5	6.5	4.5	2.5	1.6	1.0	...	A 299

Copyright ASME International
Provided by IHS under license with ASME
No reproduction or networking permitted without license from IHS
Not for Resale

Table A-1 Basic Allowable Stresses in Tension for Metals[1] (Cont'd)

Numbers in Parentheses Refer to Notes for Appendix A Tables; Specifications Are ASTM Unless Otherwise Indicated

Material	Spec. No.	P-No. or S-No. (5)	Grade	Notes	Min. Temp., °F (6)	Specified Min. Strength, ksi		Min. Temp. to 100	200	300
						Tensile	Yield			
Carbon Steel (Cont'd)										
Plates and Sheets (Structural)										
...	A 283	1	A	(8c)(57)	A	45	24	13.8	13.2	12.5
...	A 570	S-1	30	(8c)(57)	A	49	30	15.0	15.0	15.0
...	A 283	1	B	(8c)(57)	A	50	27	15.3	14.6	14.0
...	A 570	S-1	33	(8c)(57)	A	52	33	15.9	15.9	15.9
...	A 570	S-1	36	(8c)(57)	A	53	36	16.3	16.3	16.3
...	A 283	1	C	(8c)(57)	A	55	30	16.9	16.1	15.3
...	A 570	S-1	40	(8c)(57)	A	55	40	16.9	16.9	16.9
...	A 36	1	...	(8c)	A	58	36	17.8	16.9	16.9
...	A 283	1	D	(8c)(57)	A	60	33	18.4	17.5	16.7
...	A 570	S-1	45	(8c)(57)	A	60	45	18.4	18.4	18.4
...	A 570	S-1	50	(8c)(57)	A	65	50	19.9	19.9	19.9
Forgings and Fittings (2)										
...	A 350	1	LF1	(9)(57)(59)	−20	60	30	20.0	18.3	17.7
...	A 181	1	Cl. 60	(9)(57)(59)	A	60	30	20.0	18.3	17.7
...	A 420	1	WPL6	(57)	−50	60	35	20.0	20.0	20.0
...	A 234	1	WPB	(57)(59)	B	60	35	20.0	20.0	20.0
...	A 350	1	LF2	(9)(57)	−50	70	36	23.3	21.9	21.3
...	A 105	1	...	(9)(57)(59)	−20	70	36	23.3	21.9	21.3
...	A 181	1	Cl. 70	(9)(57)(59)	A					
...	A 234	1	WPC	(57)(59)	B	70	40	23.3	23.3	23.3
Castings (2)										
...	A 216	1	WCA	(57)	−20	60	30	20.0	18.3	17.7
...	A 352	1	LCB	(9)(57)	−50	65	35	21.7	21.3	20.7
...	A 216	1	WCB	(9)(57)	−20	70	36	23.3	21.9	21.3
...	A 216	1	WCC	(9)(57)	−20	70	40	23.3	23.3	23.3

Copyright ASME International
Provided by IHS under license with ASME
No reproduction or networking permitted without license from IHS
Not for Resale

Table A-1 Basic Allowable Stresses in Tension for Metals[1] (Cont'd)

Numbers in Parentheses Refer to Notes for Appendix A Tables; Specifications Are ASTM Unless Otherwise Indicated

Basic Allowable Stress *S*, ksi (1), at Metal Temperature, °F (7)														
400	500	600	650	700	750	800	850	900	950	1000	1050	1100	Grade	Spec. No.
														Carbon Steel (Cont'd)
														Plates and Sheets (Structural)
11.9	11.3	10.7	10.3	10.1	9.4	...	...	...	...	...	...	...	A	A 283
15.0	15.0	13.8	13.5	13.4	10.5	...	...	...	...	...	...	...	30	A 570
13.3	12.5	11.8	11.5	11.1	10.2	...	...	...	...	...	...	...	B	A 283
15.9	15.9	14.7	14.4	14.3	11.2	...	...	...	...	...	...	...	33	A 570
16.3	16.3	15.0	14.7	14.6	11.4	...	...	...	...	...	...	...	36	A 570
14.6	13.8	13.0	12.6	12.2	11.1	...	...	...	...	...	...	...	C	A 283
16.9	16.9	15.6	15.3	15.2	11.6	...	...	...	...	...	...	...	40	A 570
16.9	16.9	16.9	16.9	16.9	...	...	...	...	...	...	...	...	...	A 36
15.9	15.0	14.2	13.8	13.2	11.9	...	...	...	...	...	...	...	D	A 283
18.4	17.2	15.7	15.4	15.2	12.2	...	...	...	...	...	...	...	45	A 570
19.9	18.6	17.2	16.9	16.7	12.9	...	...	...	...	...	...	...	50	A 570
														Forgings and Fittings (2)
17.2	16.2	14.8	14.5	14.4	13.0	10.8	7.8	5.0	3.0	1.5	...	...	LF1	A 350
17.2	16.2	14.8	14.5	14.4	13.0	10.8	8.7	6.5	4.5	2.5	1.6	1.0	Cl. 60	A 181
20.0	18.9	17.3	17.0	16.8	13.0	10.8	7.8	5.0	3.0	1.5	...	...	WPL6	A 420
20.0	18.9	17.3	17.0	16.8	13.0	10.8	8.7	6.5	4.5	2.5	1.6	1.0	WPB	A 234
20.6	19.4	17.8	17.4	17.3	14.8	12.0	7.8	5.0	3.0	1.5	...	...	LF2	A 350
20.6	19.4	17.8	17.4	17.3	14.8	12.0	9.3	6.5	4.5	2.5	1.6	1.0	... Cl. 70	A 105 A 181
22.9	21.6	19.7	19.4	19.2	14.8	12.0	...	...	...	...	...	...	WPC	A 234
														Castings (2)
17.2	16.2	14.8	14.5	14.4	13.0	10.8	8.6	6.5	4.5	2.5	1.6	1.0	WCA	A 216
20.0	18.9	17.3	17.0	16.8	13.8	11.4	8.9	6.5	4.5	2.5	1.6	1.0	LCB	A 352
20.6	19.4	17.8	17.4	17.3	14.8	12.0	9.3	6.5	4.5	2.5	1.6	1.0	WCB	A 216
22.9	21.6	19.7	19.4	19.2	14.8	12.0	9.3	6.5	4.5	2.5	...	...	WCC	A 216

Copyright ASME International
Provided by IHS under license with ASME
No reproduction or networking permitted without license from IHS
Not for Resale

Table A-1 Basic Allowable Stresses in Tension for Metals[1] (Cont'd)

Numbers in Parentheses Refer to Notes for Appendix A Tables; Specifications Are ASTM Unless Otherwise Indicated

Material	Spec. No.	P-No. or S-No. (5)	Grade	Notes	Min. Temp., °F (6)	Specified Min. Strength, ksi		Min. Temp.	
						Tensile	Yield	to 100	200
Low and Intermediate Alloy Steel Pipes (2)									
½Cr–½Mo	A 335	3	P2	. . .	−20	55	30	18.3	18.3
½Cr–½Mo A 387 Gr. 2 Cl. 1	A 691	3	½CR	(11)(67)	−20	55	33	18.3	18.3
C–½Mo	A 335	3	P1						
C–½Mo	A 369	3	FP1	(58)	−20	55	30	18.3	18.3
½Cr–½Mo	A 369	3	FP2	. . .	−20	55	30	18.3	18.3
1Cr–½Mo A 387 Gr. 12 Cl. 1	A 691	4	1CR	(11)(67)	−20	55	33	18.3	18.3
½Cr–½Mo	A 426	3	CP2	(10)	−20	60	30	18.4	17.7
1½Si–½Mo	A 335	3	P15	. . .					
1½Si–½Mo	A 426	3	CP15	(10)	−20	60	30	18.8	18.2
1Cr–½Mo	A 426	4	CP12	(10)	−20	60	30	18.8	18.3
5Cr–½Mo–1½Si	A 426	5B	CP5b	(10)	−20	60	30	18.8	17.9
3Cr–Mo	A 426	5A	CP21	(10)	−20	60	30	18.8	18.1
¾Cr–¾Ni–Cu–Al	A 333	4	4	. . .	−150	60	35	20.0	19.1
2Cr–½Mo	A 369	4	FP3b	. . .	−20	60	30	20.0	18.5
1Cr–½Mo	A 335	4	P12						
1Cr–½Mo	A 369	4	FP12	. . .	−20	60	32	20.0	18.7
1¼Cr–½Mo	A 335	4	P11						
1¼Cr–½Mo	A 369	4	FP11	. . .	−20	60	30	20.0	18.7
1¼Cr–½Mo A 387 Gr. 11 Cl. 1	A 691	4	1¼CR	(11)(67)	−20	60	35	20.0	20.0
5Cr–½Mo A 387 Gr. 5 Cl. 1	A 691	5B	5CR	(11)(67)	−20	60	30	20.0	18.1
5Cr–½Mo	A 335	5B	P5						
5Cr–½Mo–Si	A 335	5B	P5b	. . .	−20	60	30	20.0	18.1
5Cr–½Mo–Ti	A 335	5B	P5c						
5Cr–½Mo	A 369	5B	FP5						
9Cr–1Mo	A 335	5B	P9						
9Cr–1Mo	A 369	5B	FP9	. . .	−20	60	30	20.0	18.1
9Cr–1Mo A 387 Gr. 9 Cl. 1	A 691	5B	9CR						
3Cr–1Mo	A 335	5A	P21						
3Cr–1Mo	A 369	5A	FP21	. . .	−20	60	30	20.0	18.7
3Cr–1Mo A 387 Gr. 21 Cl. 1	A 691	5A	3CR	(11)(67)	−20	60	30	20.0	18.5

Copyright ASME International
Provided by IHS under license with ASME
No reproduction or networking permitted without license from IHS
Not for Resale

Table A-1 Basic Allowable Stresses in Tension for Metals[1] (Cont'd)

Numbers in Parentheses Refer to Notes for Appendix A Tables; Specifications Are ASTM Unless Otherwise Indicated

Basic Allowable Stress *S*, ksi (1), at Metal Temperature, °F (7)																	
300	400	500	600	650	700	750	800	850	900	950	1000	1050	1100	1150	1200	Grade	Spec. No.
																Low and Intermediate Alloy Steel Pipes (2)	
17.5	16.9	16.3	15.7	15.4	15.1	13.8	13.5	13.2	12.8	9.2	5.9	...	...	...	...	P2	A 335
18.3	18.3	17.9	17.3	16.9	16.6	13.8	13.8	13.4	12.8	9.2	5.9	...	...	...	...	½CR	A 691
																P1	A 335
17.5	16.9	16.3	15.7	15.4	15.1	13.8	13.5	13.2	12.7	8.2	4.8	4.0	2.4	...	...	FP1	A 369
17.5	16.9	16.3	15.7	15.4	15.1	13.8	13.5	13.2	12.8	9.2	5.9	4.0	2.4	...	...	FP2	A 369
18.3	18.3	17.9	17.3	16.9	16.6	16.3	15.9	15.4	14.0	11.3	7.2	4.5	2.8	1.8	1.1	1CR	A 691
17.0	16.3	15.6	14.9	14.6	14.2	13.9	13.5	13.2	12.5	10.0	6.3	4.0	2.4	...	...	CP2	A 426
																P15	A 335
17.6	17.0	16.5	15.9	15.6	15.3	15.0	14.4	13.8	12.5	10.0	6.3	4.0	2.4	...	...	CP15	A 426
17.6	17.1	16.5	15.9	15.7	15.4	15.1	14.8	14.2	13.1	11.3	7.2	4.5	2.8	1.8	1.1	CP12	A 426
17.1	16.2	15.4	14.5	14.1	13.7	13.3	12.8	12.4	10.9	9.0	5.5	3.5	2.5	1.8	1.2	CP5b	A 426
17.4	16.8	16.1	15.5	15.2	14.8	14.5	13.9	13.2	12.0	9.0	7.0	5.5	4.0	2.7	1.5	CP21	A 426
18.2	17.3	16.4	15.5	15.0	...	...	...	...	...	...	...	...	...	...	...	4	A 333
17.5	16.4	16.3	15.7	15.4	15.1	13.9	13.5	13.1	12.5	10.0	6.2	4.2	2.6	1.4	1.0	FP3b	A 369
																P12	A 335
18.0	17.5	17.2	16.7	16.2	15.6	15.2	15.0	14.5	12.8	11.3	7.2	4.5	2.8	1.8	1.1	FP12	A 369
																P11	A 335
18.0	17.5	17.2	16.7	16.2	15.6	15.2	15.0	14.5	12.8	9.3	6.3	4.2	2.8	1.9	1.2	FP11	A 369
20.0	19.7	18.9	18.3	18.0	17.6	17.3	16.8	16.3	15.0	9.9	6.3	4.2	2.8	1.9	1.2	1¼CR	A 691
17.4	17.2	17.1	16.8	16.6	16.3	13.2	12.8	12.1	10.9	8.0	5.8	4.2	2.8	2.0	1.3	5CR	A 691
																P5	A 335
17.4	17.2	17.1	16.8	16.6	16.3	13.2	12.8	12.1	10.9	8.0	5.8	4.2	2.9	1.8	1.0	P5b	A 335
																P5c	A 335
																FP5	A 369
																F9	A 335
17.4	17.2	17.1	16.8	16.6	16.3	13.2	12.8	12.1	11.4	10.6	7.4	5.0	3.3	2.2	1.5	FP9	A 369
																9CR	A 691
																P21	A 335
18.0	17.5	17.2	16.7	16.2	15.6	15.2	15.0	14.0	12.0	9.0	7.0	5.5	4.0	2.7	1.5	FP21	A 369
18.1	17.9	17.9	17.9	17.9	17.9	17.9	17.8	14.0	12.0	9.0	7.0	5.5	4.0	2.7	1.5	3CR	A 691

--`,,```,,,,````-`-`,,`,,`,`,,`---
Copyright ASME International
Provided by IHS under license with ASME
No reproduction or networking permitted without license from IHS
Not for Resale

Table A-1 Basic Allowable Stresses in Tension for Metals[1] (Cont'd)

Numbers in Parentheses Refer to Notes for Appendix A Tables; Specifications Are ASTM Unless Otherwise Indicated

Material	Spec. No.	P-No. or S-No. (5)	Grade	Notes	Min. Temp., °F (6)	Specified Min. Strength, ksi		Min. Temp.	
						Tensile	Yield	to 100	200
Low and Intermediate Alloy Steel (Cont'd)									
Pipes (2) (Cont'd)									
2¼Cr–1Mo	A 691	5A	2¼CR	(11)(67)					
A 387 Gr. 22 Cl. 1				(72)(75)					
2¼Cr–1Mo	A 369	5A	FP22	(72)(75)	−20	60	30	20.0	18.5
2¼Cr–1Mo	A 335	5A	P22	(72)(75)					
2Ni–1Cu	A 333								
2Ni–1Cu	A 334	9A	9	...	−100	63	46	21.0	...
2¼Ni	A 333								
2¼Ni	A 334	9A	7	...	−100	65	35	21.7	19.6
3½Ni	A 333								
3½Ni	A 334	9B	3	...	−150	65	35	21.7	19.6
C–½Mo	A 426	3	CP1	(10)(58)	−20	65	35	21.7	21.7
C–Mo A 204 Gr. A	A 672	3	L65						
C–Mo A 204 Gr. A	A 691	3	CM65	(11)(58)(67)	−20	65	37	21.7	21.7
2¼Ni A 203 Gr. B	A 671	9A	CF70						
3½Ni A 203 Gr. E	A 671	9B	CF71	(11)(65)(67)	−20	70	40	23.3	...
C–Mo A 204 Gr. B	A 672	3	L70						
C–Mo A 204 Gr. B	A 691	3	CM70	(11)(58)(67)	−20	70	40	23.3	23.3
1¼Cr–½Mo	A 426	4	CP11	(10)	−20	70	40	23.3	23.3
2¼Cr–1Mo	A 426	5A	CP22	(10)(72)	−20	70	40	23.3	23.3
C–Mo A 204 Gr. C	A 672	3	L75						
C–Mo A 204 Gr. C	A 691	3	CM75	(11)(58)(67)	−20	75	43	25.0	25.0
9Cr–1Mo–V ≤ 3 in. thick	A 335								
9Cr–1Mo–V ≤ 3 in. thick	A 691	5B	P91	...	−20	85	60	28.3	28.3
5Cr–½Mo	A 426	5B	CP5	(10)	−20	90	60	30.0	28.0
9Cr–1Mo	A 426	5B	CP9	(10)	−20	90	60	30.0	22.5
9Ni	A 333	11A	8	(47)					
9Ni	A 334	11A	8	...	−320	100	75	31.7	31.7
Plates									
½Cr–½Mo	A 387	3	2 Cl. 1	...	−20	55	33	18.3	18.3
1Cr–½Mo	A 387	4	12 Cl. 1	...	−20	55	33	18.3	18.3
9Cr–1Mo	A 387	5	9 Cl. 1	...	−20	60	30	20.0	18.1

Copyright ASME International
Provided by IHS under license with ASME
No reproduction or networking permitted without license from IHS
Not for Resale

Table A-1 Basic Allowable Stresses in Tension for Metals[1] (Cont'd)

Numbers in Parentheses Refer to Notes for Appendix A Tables; Specifications Are ASTM Unless Otherwise Indicated

Basic Allowable Stress *S*, ksi (1), at Metal Temperature, °F (7)																	
300	400	500	600	650	700	750	800	850	900	950	1000	1050	1100	1150	1200	Grade	Spec. No.
																Low and Intermediate Alloy Steel (Cont'd) Pipes (2) (Cont'd)	
																$2\frac{1}{4}$CR	A 691
18.0	17.9	17.9	17.9	17.9	17.9	17.9	17.8	14.5	12.8	10.8	7.8	5.1	3.2	2.0	1.6	FP22	A 369
																P22	A 335
...	...	...	...	...	...	...	...	...	...	...	...	...	...	...	...	9	A 333, A 334
19.6	18.7	17.6	16.8	16.3	15.5	13.9	11.4	9.0	6.5	4.5	2.5	1.6	1.0	...	...	7	A 333, A 334
19.6	18.7	17.8	16.8	16.3	15.5	13.9	11.4	9.0	6.5	4.5	2.5	1.6	1.0	...	...	3	A 333, A 334
21.7	21.7	21.3	20.7	20.4	20.0	16.3	15.7	14.4	12.5	10.0	6.3	4.0	2.4	...	...	CP1	A 426
21.7	20.7	20.0	19.3	19.0	18.6	16.3	15.8	15.3	13.7	8.2	4.8	4.0	2.4	...	...	L65	A 672
																CM65	A 691
...	...	...	...	...	...	...	...	...	...	...	...	...	...	...	...	CF70	A 671
																CF71	A 671
23.3	22.5	21.7	20.9	20.5	20.1	17.5	17.5	17.1	13.7	8.2	4.8	4.0	2.4	...	...	L70	A 672
																CM70	A 691
23.3	23.3	22.9	22.3	21.6	20.9	15.5	15.0	14.4	13.7	9.3	6.3	4.2	2.8	1.9	1.2	CP11	A 426
23.3	23.3	22.9	22.3	21.6	20.9	17.5	17.5	16.0	14.0	11.0	7.8	5.1	3.2	2.0	1.2	CP22	A 426
25.0	24.1	23.3	22.5	22.1	21.7	18.8	18.8	18.3	13.7	8.2	4.8	4.0	2.4	...	...	L75	A 672
																CM75	A 691
28.3	28.2	28.1	27.7	27.3	26.7	25.9	24.9	23.7	22.3	20.7	18.0	14.0	10.3	7.0	4.3	P91	A 335, A 691
26.1	24.1	22.1	20.1	19.0	17.5	16.0	14.5	12.8	10.4	7.6	5.6	4.2	3.1	1.8	1.0	CP5	A 426
22.5	22.5	22.5	22.5	22.5	22.0	21.0	19.4	17.3	15.0	10.7	8.5	5.5	3.3	2.2	1.5	CP9	A 426
...	...	...	...	...	...	...	...	...	...	...	...	...	...	...	...	8	A 333
																8	A 334
																Plates	
18.3	18.3	17.9	17.3	16.9	16.6	13.8	13.8	13.4	12.8	9.2	5.9	...	...	...	...	2 Cl. 1	A 387
18.3	18.3	17.9	17.3	16.9	16.6	16.3	15.9	15.4	14.0	11.3	7.2	4.5	2.8	1.8	1.1	12 Cl. 1	A 387
17.4	17.2	17.1	16.8	16.6	16.3	13.2	12.8	12.1	11.4	10.6	7.4	5.0	3.3	2.2	1.5	9 Cl. 1	A 387

Copyright ASME International
Provided by IHS under license with ASME
No reproduction or networking permitted without license from IHS
Not for Resale

(04)

Table A-1 Basic Allowable Stresses in Tension for Metals[1] (Cont'd)

Numbers in Parentheses Refer to Notes for Appendix A Tables; Specifications Are ASTM Unless Otherwise Indicated

Material	Spec. No.	P-No. or S-No. (5)	Grade	Notes	Min. Temp., °F (6)	Specified Min. Strength, ksi		Min. Temp.	
						Tensile	Yield	to 100	200
Low and Intermediate Alloy Steel (Cont'd)									
Plates (Cont'd)									
1¼Cr–½Mo	A 387	4	11 Cl. 1	...	−20	60	35	20.0	20.0
5Cr–½Mo	A 387	5B	5 Cl. 1	...	−20	60	30	20.0	18.1
3Cr–1Mo	A 387	5A	21 Cl. 1	...	−20	60	30	20.0	18.5
2¼Cr–1Mo	A 387	5A	22 Cl. 1	(72)	−20	60	30	20.0	18.5
2¼Ni	A 203	9A	A	(12)(65)	−20	65	37	21.7	19.6
3½Ni	A 203	9B	D						
C–½Mo	A 204	3	A	(58)	−20	65	37	21.7	21.7
1Cr–½Mo	A 387	4	12 Cl. 2	...	−20	65	40	21.7	21.7
2¼Ni	A 203	9A	B	(12)(65)	−20	70	40	23.3	21.1
3½Ni	A 203	9B	E						
½Cr–½Mo	A 387	3	2 Cl. 2	...	−20	70	45	23.3	17.5
C–½Mo	A 204	3	B	(58)	−20	70	40	23.3	23.3
Cr–Mn–Si	A 202	4	A	...	−20	75	45	25.0	23.9
Mn–Mo	A 302	3	A	...	−20	75	45	25.0	25.0
C–½Mo	A 204	3	C	(58)	−20	75	43	25.0	25.0
1¼Cr–½Mo	A 387	4	11 Cl. 2	...	−20	75	45	25.0	25.0
5Cr–½Mo	A 387	5B	5 Cl. 2	...	−20	75	45	25.0	24.9
3Cr–½Mo	A 387	5A	21 Cl. 2	...	−20	75	45	25.0	25.0
2¼Cr–1Mo	A 387	5A	22 Cl. 2	(72)	−20	75	45	25.0	25.0
Mn–Mo	A 302	3	B	...	−20	80	50	26.7	26.7
Mn–Mo–Ni	A 302	3	C						
Mn–Mo–Ni	A 302	3	D						
Cr–Mn–Si	A 202	4	B	...	−20	85	47	28.4	27.1
9Cr–1Mo–V ≤ 3 in. thick	A 387	5B	91 Cl. 2	...	−20	85	60	28.3	28.3
8Ni	A 553	11A	Type II	(47)	−275	100	85	31.7	...
5Ni	A 645	11A	...	...	−275	95	65	31.7	31.6
9Ni	A 553	11A	Type I	(47)	−320	100	85	31.7	31.7
9Ni	A 353	11A	...	(47)	−320	100	75		
Forgings and Fittings (2)									
C–½Mo	A 234	3	WP1	(58)	−20	55	30	18.3	18.3
1Cr–½Mo	A 182	4	F12 Cl. 1	(9)	−20	60	30	20.0	18.7
1Cr–½Mo	A 234	4	WP12 Cl. 1	...	−20	60	32		
1¼Cr–½Mo	A 182	4	F11 Cl. 1	(9)	−20	60	30	20.0	18.7
1¼Cr–½Mo	A 234	4	WP11b Cl. 1	...					

Copyright ASME International
Provided by IHS under license with ASME
No reproduction or networking permitted without license from IHS
Not for Resale

Table A-1 Basic Allowable Stresses in Tension for Metals[1] (Cont'd)

Numbers in Parentheses Refer to Notes for Appendix A Tables; Specifications Are ASTM Unless Otherwise Indicated

Basic Allowable Stress *S*, ksi (1), at Metal Temperature, °F (7)																	
300	400	500	600	650	700	750	800	850	900	950	1000	1050	1100	1150	1200	Grade	Spec. No.
																Low and Intermediate Alloy Steel (Cont'd) Plates (Cont'd)	
20.0	19.7	18.9	18.3	18.0	17.6	17.3	16.8	16.3	13.7	9.3	6.3	4.2	2.8	1.9	1.2	11 Cl. 1	A 387
17.4	17.2	17.1	16.8	16.6	16.3	13.2	12.8	12.1	10.9	8.0	5.8	4.2	2.9	1.8	1.0	5 Cl. 1	A 387
18.1	17.9	17.9	17.9	17.9	17.9	17.9	17.8	14.0	12.0	9.0	7.0	5.5	4.0	2.7	1.5	21 Cl. 1	A 387
18.0	17.9	17.9	17.9	17.9	17.9	17.9	17.8	14.5	12.8	10.8	8.0	5.7	3.8	2.4	1.4	22 Cl. 1	A 387
																A	A 203
19.6	16.3	16.3	16.3	16.3	15.5	13.9	11.4	9.0	6.5	4.5	2.5	...	...	...	...	D	A 203
21.7	20.7	20.0	19.3	19.0	18.6	16.3	15.8	15.3	13.7	8.2	4.8	4.0	2.4	...	...	A	A 204
21.7	21.7	21.7	20.9	20.5	20.1	19.7	19.2	18.7	18.0	11.3	7.2	4.5	2.8	1.8	1.1	12 Cl. 2	A 387
																B	A 203
21.1	17.5	17.5	17.5	17.5	16.6	14.8	12.0	9.3	6.5	4.5	2.5	...	...	...	...	E	A 203
17.5	17.5	17.5	17.5	17.5	17.5	17.5	17.5	16.8	14.5	10.0	6.3	...	...	...	...	2 Cl. 2	A 387
23.3	22.5	21.7	20.9	20.5	20.1	17.5	17.5	17.1	13.7	8.2	4.8	4.0	2.4	...	...	B	A 204
22.8	21.6	20.5	19.3	18.8	17.7	15.7	12.0	7.8	5.0	3.0	1.5	...	...	...	...	A	A 202
25.0	25.0	25.0	25.0	25.0	25.0	18.3	17.7	16.8	13.7	8.2	4.8	...	...	...	...	A	A 302
25.0	24.1	23.3	22.5	22.1	21.7	18.8	18.8	18.3	13.7	8.2	4.8	4.0	2.4	...	...	C	A 204
25.0	25.0	24.3	23.5	23.1	22.7	22.2	21.6	21.1	13.7	9.3	6.3	4.2	2.8	1.9	1.2	11 Cl. 2	A 387
24.2	24.1	23.9	23.6	23.2	22.8	16.5	16.0	15.1	10.9	8.0	5.8	4.2	2.9	1.8	1.0	5 Cl. 2	A 387
24.5	24.1	23.9	23.8	23.6	23.4	23.0	22.5	19.0	13.1	9.5	6.8	4.9	3.2	2.4	1.3	21 Cl. 2	A 387
24.5	24.1	23.9	23.8	23.6	23.4	23.0	22.5	21.8	17.0	11.4	7.8	5.1	3.2	2.0	1.2	22 Cl. 2	A 387
																B	A 302
26.7	26.7	26.7	26.7	26.7	26.7	19.6	18.8	17.9	13.7	8.2	4.8	...	...	...	...	C	A 302
																D	A 302
25.8	24.5	23.2	21.9	21.3	19.8	17.7	12.0	7.8	5.0	3.0	1.5	...	...	...	...	B	A 202
28.3	28.2	28.1	27.7	27.3	26.7	25.9	24.9	23.7	22.3	20.7	18.0	14.0	10.3	7.0	4.3	91 Cl. 2	A 387
...	...	...	...	...	...	...	...	...	...	...	...	...	...	...	...	Type II	A 553
...	...	...	...	...	...	...	...	...	...	...	...	...	...	...	...	...	A 645
																Type I	A 553
...	...	...	...	...	...	...	...	...	...	...	...	...	...	...	...	...	A 353
																Forgings and Fittings (2)	
17.5	16.9	16.3	15.7	15.4	15.1	13.8	13.5	13.2	12.7	8.2	4.8	4.0	2.4	...	...	WP1	A 234
																F12 Cl. 1	A 182
18.0	17.5	17.2	16.7	16.2	15.6	15.2	15.0	14.5	12.8	11.3	7.2	4.5	2.8	1.8	1.1	WP12 Cl. 1	A 234
																F11 Cl. 1	A 182
18.0	17.5	17.2	16.7	16.2	15.6	15.2	15.0	14.5	12.8	9.3	6.3	4.2	2.8	1.9	1.2	WP11b Cl. 1	A 234

Copyright ASME International
Provided by IHS under license with ASME
No reproduction or networking permitted without license from IHS
Not for Resale

Table A-1 Basic Allowable Stresses in Tension for Metals[1] (Cont'd)

Numbers in Parentheses Refer to Notes for Appendix A Tables; Specifications Are ASTM Unless Otherwise Indicated

Material	Spec. No.	P-No. or S-No. (5)	Grade	Notes	Min. Temp., °F (6)	Specified Min. Strength, ksi		Min. Temp.	
						Tensile	Yield	to 100	200
Low and Intermediate Alloy Steel (Cont'd)									
Forgings and Fittings (2) (Cont'd)									
2¼Cr–1Mo	A 182	...	F22 Cl. 1	(9)(72)(75)					
2¼Cr–1Mo	A 234	5A	WP22 Cl. 1	(72)	−20	60	30	20.0	18.5
5Cr–½Mo	A 234	5B	WP5	...	−20	60	30	20.0	18.1
9Cr–1Mo	A 234	5B	WP9	...	−20	60	30	20.0	18.1
3½Ni	A 420	9B	WPL3	...	−150	65	35	21.7	...
3½Ni	A 350	9B	LF3	(9)	−150	70	37.5	23.3	...
½Cr–½Mo	A 182	3	F2	(9)	−20	70	40	23.3	23.3
C–½Mo	A 182	3	F1	(9)(58)	−20	70	40	23.3	23.3
1Cr–½Mo	A 182	4	F12 Cl. 2	(9)					
1Cr–½Mo	A 234	4	WP12 Cl. 2	...	−20	70	40	23.3	23.3
1¼Cr–½Mo	A 182	4	F11 Cl. 2	(9)					
1¼Cr–½Mo	A 234	4	WP11 Cl. 2	...	−20	70	40	23.3	23.3
5Cr–½Mo	A 182	5B	F5	(9)	−20	70	40	23.3	23.3
3Cr–1Mo	A 182	5A	F21	(9)	−20	75	45	25.0	25.0
2¼Cr–1Mo	A 182	5A	F22 Cl. 3	(9)(72)					
2¼Cr–1Mo	A 234	5A	WP22 Cl. 3	(72)	−20	75	45	25.0	25.0
9Cr–1Mo	A 182	5B	F9	(9)	−20	85	55	28.3	28.3
9Cr–1Mo–V ≤ 3 in. thick	A 182	5B	F91						
9Cr–1Mo–V ≤ 3 in. thick	A 234	5B	WP91	...	−20	85	60	28.3	28.3
5Cr–½Mo	A 182	5B	F5a	(9)	−20	90	65	30.0	29.9
9Ni	A 420	11A	WPL8	(47)	−320	110	75	31.7	31.7
Castings (2)									
C–½Mo	A 352	3	LC1	(9)(58)	−75	65	35	21.7	21.5
C–½Mo	A 217	3	WC1	(9)(58)	−20	65	35	21.7	21.5
2½Ni	A 352	9A	LC2	(9)	−100				
3½Ni	A 352	9B	LC3	(9)	−150	70	40	23.3	17.5
Ni–Cr–½Mo	A 217	4	WC4	(9)	−20	70	40	23.3	23.3
Ni–Cr–1Mo	A 217	4	WC5	(9)	−20	70	40	23.3	23.3
1¼Cr–½Mo	A 217	4	WC6	(9)	−20	70	40	23.3	23.3
2¼Cr–1Mo	A 217	5A	WC9	(9)	−20	70	40	23.3	23.3
5Cr–½Mo	A 217	5B	C5	(9)	−20	90	60	30.0	29.9
9Cr–1Mo	A 217	5B	C12	(9)	−20	90	60	30.0	29.9

Copyright ASME International
Provided by IHS under license with ASME
No reproduction or networking permitted without license from IHS
Not for Resale

Table A-1 Basic Allowable Stresses in Tension for Metals[1] (Cont'd)

Numbers in Parentheses Refer to Notes for Appendix A Tables; Specifications Are ASTM Unless Otherwise Indicated

Basic Allowable Stress *S*, ksi (1), at Metal Temperature, °F (7)																	
300	400	500	600	650	700	750	800	850	900	950	1000	1050	1100	1150	1200	Grade	Spec. No.
																Low and Intermediate Alloy Steel (Cont'd) Forgings and Fittings (2) (Cont'd)	
																F22 Cl. 1	A 182
18.0	17.9	17.9	17.9	17.9	17.9	17.9	17.8	14.5	12.8	10.8	7.8	5.1	3.2	2.0	1.2	WP22 Cl. 1	A 234
17.4	17.2	17.1	16.8	16.6	16.3	13.2	12.8	12.1	10.9	8.0	5.8	4.2	2.9	1.8	1.0	WP5	A 234
17.4	17.2	17.1	16.8	16.6	16.3	13.2	12.8	12.1	11.4	10.6	7.4	5.0	3.3	2.2	1.5	WP9	A 234
...	...	...	...	...	...	...	...	...	...	...	...	...	...	...	...	WPL3	A 420
...	...	...	...	...	...	...	...	...	...	...	...	...	...	...	...	LF3	A 350
23.3	22.5	21.7	20.9	20.5	20.1	17.5	17.5	17.1	15.0	9.2	5.9	...	...	...	...	F2	A 182
23.3	22.5	21.7	20.9	20.5	20.1	17.5	17.5	17.1	13.7	8.2	4.8	4.0	2.4	...	...	F1	A 182
																F12 Cl. 2	A 182
23.3	22.5	21.7	20.9	20.5	20.1	19.7	19.2	18.7	18.0	11.3	7.2	4.5	2.8	1.8	1.1	WP12 Cl. 2	A 234
																F11 Cl. 2	A 182
23.3	22.5	21.7	20.9	20.5	20.1	19.7	19.2	18.7	13.7	9.3	6.3	4.2	2.8	1.9	1.2	WP11 Cl. 2	A 234
22.6	22.4	22.4	22.0	21.7	21.3	15.4	14.8	14.1	10.9	8.0	5.8	4.2	2.9	1.8	1.0	F5	A 182
24.5	24.1	23.9	23.8	23.6	23.4	23.0	22.5	19.0	13.1	9.5	6.8	4.9	3.2	2.4	1.3	F21	A 182
																F22 Cl. 3	A 182
24.5	24.1	23.9	23.8	23.6	23.4	23.0	22.5	21.8	17.0	11.4	7.8	5.1	3.2	2.0	1.2	WP22 Cl. 3	A 234
27.5	27.2	27.1	26.8	26.3	25.8	18.7	18.1	17.1	16.2	11.0	7.4	5.0	3.3	2.2	1.5	F9	A 182
																F91	A 182
28.3	28.2	28.1	27.7	27.3	26.7	25.9	24.9	23.7	22.3	20.7	18.0	14.0	10.3	7.0	4.3	WP91	A 234
29.1	28.9	28.7	28.3	27.9	27.3	19.8	19.1	14.3	10.9	8.0	5.8	4.2	2.9	1.8	1.0	F5a	A 182
...	...	...	...	...	...	...	...	...	...	...	...	...	...	...	...	WPL8	A 420
																	Castings (2)
20.5	19.7	18.9	18.3	18.0	17.6	...	...	...	...	...	...	...	...	...	...	LC1	A 352
20.5	19.7	18.9	18.3	18.0	17.6	16.2	15.8	15.3	13.7	8.2	4.8	4.0	2.4	...	...	WC1	A 352
																LC2	A 352
17.5	17.5	17.5	17.5	17.5	...	...	...	...	...	...	...	...	...	...	...	LC3	A 352
23.3	22.5	21.7	20.9	20.5	20.1	17.5	17.5	17.1	15.0	9.2	5.9	...	...	...	...	WC4	A 217
23.3	22.5	21.7	20.9	20.5	20.1	17.5	17.5	17.1	16.3	11.0	6.9	4.6	2.8	...	...	WC5	A 217
23.3	22.5	21.7	20.9	20.5	20.1	19.7	19.2	18.7	14.5	11.0	6.9	4.6	2.8	2.5	1.3	WC6	A 217
23.1	22.5	22.4	22.4	22.2	21.9	21.5	21.0	19.8	17.0	11.4	7.8	5.1	3.2	2.0	1.2	WC9	A 217
29.1	28.9	28.7	28.3	27.9	27.3	19.8	19.1	14.3	10.9	8.0	5.8	4.2	2.9	1.8	1.0	C5	A 217
29.1	28.9	28.7	28.3	27.9	27.3	19.8	19.1	18.2	16.5	11.0	7.4	5.0	3.3	2.2	1.5	C12	A 217

Copyright ASME International
Provided by IHS under license with ASME
No reproduction or networking permitted without license from IHS
Not for Resale

Table A-1 Basic Allowable Stresses in Tension for Metals[1] (Cont'd)

Numbers in Parentheses Refer to Notes for Appendix A Tables; Specifications Are ASTM Unless Otherwise Indicated

Material	Spec. No.	P-No. or S-No. (5)	Grade	Notes	Min. Temp., °F (6)	Specified Min. Strength, ksi		Min. Temp. to 100	200	300	400	500	600
						Tensile	Yield						
Stainless Steel (3)(4) Pipes and Tubes (2)													
18Cr–10Ni–Ti pipe smls > 3/8 in. thick	A 312	8	TP321	(30)(36)	–425	70	25	16.7	*16.7*	*16.7*	**16.7**	**16.1**	**15.2**
18Cr–10Ni–Ti pipe > 3/8 in. thick	A 376	8	TP321	(30)(36)	–425	70	25	16.7	*16.7*	*16.7*	**16.7**	**16.1**	**15.2**
18Cr–8Ni tube	A 269	8	TP304L	(14)(36)	–425	70	25	16.7	*16.7*	*16.7*	**15.8**	**14.8**	**14.0**
18Cr–8Ni pipe	A 312	8	TP304L	. . .	–425								
Type 304L A 240	A 358	8	304L	(36)	–425								
16Cr–12Ni–2Mo tube	A 269	8	TP316L	(14)(36)	–425	70	25	16.7	*16.7*	*16.7*	**15.5**	**14.4**	**13.5**
16Cr–12Ni–2Mo pipe	A 312	8	TP316L	. . .	–425								
Type 316L A 240	A 358	8	316L	(36)	–425								
18Cr–10Ni–Ti pipe smls > 3/8 in. thick	A 312	8	TP321	(28)(30)(36)	–425	70	25	16.7	*16.7*	*16.7*	**16.7**	**16.1**	**15.2**
18Cr–10Ni–Ti pipe > 3/8 in. thick	A 376	8	TP321	(28)(30)(36)	–425								
18Cr–10Ni–Ti pipe smls > 3/8 in. thick	A 312	8	TP321H	(30)(36)	–325								
18Cr–10Ni–Ti pipe > 3/8 in. thick	A 376	8	TP321H	. . .	–325								
23Cr–13Ni	A 451	8	CPH8	(26)(28)(35)	–325	65	28	18.7	*18.7*	*18.7*	*18.7*	*18.7*	**18.0**
25Cr–20Ni	A 451	8	CPK20	(12)(28)(35)(39)	–325	65	28	18.7	*18.7*	*18.7*	*18.7*	*18.7*	**18.0**
11Cr–Ti tube	A 268	7	TP409	(35)	–20	60	30	20.0	. . .	. . .	. . .	. . .	. . .
18Cr–Ti tube	A 268	7	TP430Ti	(35)(49)	–20	60	40	20.0	. . .	. . .	. . .	. . .	. . .
15Cr–13Ni–2Mo–Cb	A 451	S-8	CPF10MC	(28)	–325	70	30	20.0	. . .	. . .	. . .	. . .	. . .
16Cr–8Ni–2Mo pipe	A 376	8	16-8-2H	(26)(31)(35)	–325	75	30	20.0	. . .	. . .	. . .	. . .	. . .
12Cr–Al tube	A 268	7	TP405	(35)	–20	60	30	20.0	18.4	17.7	17.4	17.2	16.8
13Cr tube	A 268	6	TP410	(35)	–20	60	30	20.0	18.4	17.7	17.4	17.2	16.8
16Cr tube	A 268	7	TP430	(35)(49)	–20	60	35	20.0	20.0	19.6	19.2	19.0	18.5
18Cr–13Ni–3Mo pipe	A 312	8	TP317L	. . .	–325	75	30	20.0	*20.0*	*20.0*	**18.9**	**17.7**	**16.8**
25Cr–20Ni pipe	A 312	8	TP310	(28)(35)(39)	–325	75	30	20.0	*20.0*	*20.0*	*20.0*	**20.0**	**19.2**
Type 310S A 240	A 358	8	310S	(28)(31)(35)(36)									
25Cr–20Ni pipe	A 409	8	TP310	(28)(31)(35)(36)(39)									
18Cr–10Ni–Ti pipe smls ≤ 3/8 in. thk & wld	A 312	8	TP321	(30)	–425	75	30	20.0	*20.0*	*20.0*	*20.0*	**19.3**	**18.3**
18Cr–10Ni–Ti pipe	A 358	8	321	(30)(36)									
18Cr–10Ni–Ti pipe ≤ 3/8 in. thick	A 376	8	TP321	(30)(36)									
18Cr–10Ni–Ti pipe	A 409	8	TP321	(30)(36)									
23Cr–12Ni pipe	A 312	8	TP309	(28)(35)(39)	–325	75	30	20.0	*20.0*	*20.0*	*20.0*	*20.0*	**19.2**
Type 309S A 240	A 358	8	309S	(28)(31)(35)(36)	–325								
23Cr–12Ni pipe	A 409	8	TP309	(28)(31)(35)(36)(39)	–325								
18Cr–8Ni	A 451	8	CPF8	(26)(28)	–425	70	30	20.0	*20.0*	*19.8*	**17.5**	**16.4**	**15.7**

Copyright ASME International
Provided by IHS under license with ASME
No reproduction or networking permitted without license from IHS
Not for Resale

Table A-1 Basic Allowable Stresses in Tension for Metals[1] (Cont'd)

Numbers in Parentheses Refer to Notes for Appendix A Tables; Specifications Are ASTM Unless Otherwise Indicated

Basic Allowable Stress *S*, ksi (1), at Metal Temperature, °F (7)																			
650	700	750	800	850	900	950	1000	1050	1100	1150	1200	1250	1300	1350	1400	1450	1500	Grade	Spec. No.
																		Stainless Steel (3)(4) Pipes and Tubes (2)	
14.9	**14.6**	**14.3**	**14.1**	**14.0**	**13.8**	**13.6**	**13.5**	9.6	6.9	5.0	3.6	2.6	1.7	1.1	0.8	0.5	0.3	TP321	A 312 A 376
13.7	**13.5**	**13.3**	**13.0**	**12.8**	*11.9*	*9.9*	7.8	6.3	5.1	4.0	3.2	2.6	2.1	1.7	1.1	1.0	0.9	TP304L TP304L 304L	A 269 A 312 A 358
13.2	**12.9**	**12.6**	**12.4**	**12.1**	**11.8**	**11.5**	**11.2**	**10.8**	*10.2*	*8.8*	6.4	4.7	3.5	2.5	1.8	1.3	1.0	TP316L TP316L 316L	A 269 A 312 A 358
14.9	**14.6**	**14.3**	**14.1**	**14.0**	**13.8**	**13.6**	**13.5**	11.7	9.1	6.9	5.4	4.1	3.2	2.5	1.9	1.5	1.1	TP321 TP321 TP321H TP321H	A 312 A 376 A 312 A 376
17.4	**17.1**	**16.8**	**16.3**	*12.8*	*12.4*	*11.8*	10.4	8.4	6.4	5.0	3.7	2.9	2.3	1.7	1.3	0.9	0.8	CPH8	A 451
17.4	**17.1**	**16.8**	**16.3**	*12.8*	*12.4*	*11.9*	11.0	9.8	8.4	7.2	6.0	4.8	3.4	2.3	1.5	1.1	0.8	CPK20	A 451
...	...	...	...	...	...	...	...	...	...	...	...	...	...	...	...	...	...	TP409	A 268
...	...	...	...	...	...	...	...	...	...	...	...	...	...	...	...	...	...	TP430Ti	A 268
...	...	...	...	...	...	...	...	...	...	...	...	...	...	...	...	...	...	CPF10MC	A 451
...	...	...	...	...	...	...	...	...	...	...	...	...	...	...	...	...	...	16-8-2H	A 376
16.5	16.2	15.7	15.1	10.4	9.7	8.4	4.0	...	...	...	...	...	...	...	...	...	...	TP405	A 268
16.5	16.2	15.7	15.1	10.4	9.7	8.4	6.4	4.4	2.9	1.8	1.0	...	...	...	...	...	...	TP410	A 268
18.2	17.6	17.1	16.4	10.4	9.7	8.5	6.5	4.5	3.2	2.4	1.8	...	...	...	...	...	...	TP430	A 268
16.6	**16.2**	**15.8**	**15.5**	**15.2**	...	...	...	...	...	...	...	...	...	...	...	...	...	TP317L	A312
18.8	**18.3**	**18.0**	**17.5**	*14.6*	*13.9*	*12.5*	11.0	7.1	5.0	3.6	2.5	1.5	0.8	0.5	0.4	0.3	0.2	TP310 310S TP310	A 312 A 358 A 409
17.9	**17.5**	**17.2**	**16.9**	**16.7**	**16.6**	**16.4**	**16.2**	9.6	6.9	5.0	3.6	2.6	1.7	1.1	0.8	0.5	0.3	TP321 321 TP321 TP321	A 312 A 358 A 376 A 409
18.8	**18.3**	**18.0**	**17.5**	*14.6*	*13.9*	*12.5*	10.5	8.5	6.5	5.0	3.8	2.9	2.3	1.8	1.3	0.9	0.7	TP309 309S TP309	A 312 A 358 A 409
15.3	**15.1**	**14.9**	**14.8**	*12.9*	*12.7*	*12.3*	*10.8*	9.5	7.4	5.8	4.4	3.2	2.4	1.8	1.3	1.0	0.8	CPF8	A 451

Copyright ASME International
Provided by IHS under license with ASME
No reproduction or networking permitted without license from IHS
Not for Resale

Table A-1 Basic Allowable Stresses in Tension for Metals[1] (Cont'd)

Numbers in Parentheses Refer to Notes for Appendix A Tables; Specifications Are ASTM Unless Otherwise Indicated

Material	Spec. No.	P-No. or S-No. (5)	Grade	Notes	Min. Temp., °F (6)	Specified Min. Strength, ksi		Min. Temp. to 100	200	300	400	500	600
						Tensile	Yield						
Stainless Steel (3)(4) (Cont'd) Pipes and Tubes (2) (Cont'd)													
18Cr–10Ni–Cb pipe	A 312	8	TP347	. . .	–425								
Type 347 A 240	A 358	8	347	(30)(36)	–425								
18Cr–10Ni–Cb pipe	A 376	8	TP347	(30)(36)	–425								
18Cr–10Ni–Cb pipe	A 409	8	TP347	(30)(36)	–425	75	30	20.0	*20.0*	*20.0*	*20.0*	*19.9*	**19.3**
18Cr–10Ni–Cb pipe	A 312	8	TP348	. . .	–325								
Type 348 A 240	A 358	8	348	(30)(36)	–325								
18Cr–10Ni–Cb pipe	A 376	8	TP348	(30)(36)	–325								
18Cr–10Ni–Cb pipe	A 409	8	TP348	(30)(36)	–325								
23Cr–13Ni	A 451	8	CPH10 or CPH20	(12)(14)(28)(35)(39)	–325	70	30	20.0	*20.0*	*20.0*	*20.0*	*20.0*	**19.2**
25Cr–20Ni pipe	A 312	8	TP310	(28)(29)(35)(39)	–325	75	30	20.0	*20.0*	*20.0*	*20.0*	*20.0*	**19.2**
Type 310S A 240	A 358	8	310S	(28)(29)(31)(35)(36)									
18Cr–10Ni–Cb	A 451	8	CPF8C	(28)	–325	70	30	20.0	*20.0*	*20.0*	*20.0*	**19.3**	**18.3**
18Cr–10Ni–Ti pipe smls ≤ 3/8 in. thk; wld	A 312	8	TP321	(28)(30)									
Type 321 A 240	A 358	8	321										
18Cr–10Ni–Ti pipe ≤ 3/8 in. thick	A 376	8	TP321	(28)(30)(36)	–425	75	30	20.0	*20.0*	*20.0*	*20.0*	**19.3**	**18.3**
18Cr–10Ni–Ti pipe	A 409												
18Cr–10Ni–Ti pipe ≤ 3/8 in. thick	A 376	8	TP321H	(30)(36)	–325								
18Cr–10Ni–Ti pipe smls ≤ 3/8 in. thk; wld	A 312	8	TP321H	. . .	–325								
16Cr–12Ni–Mo tube	A 269	8	TP316	(14)(26)(28)(31)(36)	–425								
16Cr–12Ni–2Mo pipe	A 312	8	TP316	(26)(28)	–425								
Type 316 A 240	A 358	8	316	(26)(28)(31)(36)	–425								
16Cr–12Ni–2Mo pipe	A 376	8	TP316	(26)(28)(31)(36)	–425	75	30	20.0	*20.0*	*20.0*	**19.3**	**17.9**	**17.0**
16Cr–12Ni–2Mo pipe	A 409	8	TP316	(26)(28)(31)(36)	–425								
18Cr–3Ni–3Mo pipe	A 312	8	TP317	(26)(28)	–325								
18Cr–3Ni–3Mo pipe	A 409	8	TP317	(26)(28)(31)(36)	–325								
16Cr–12Ni–2Mo pipe	A 376	8	TP316H	(26)(31)(36)	–325								
16Cr–12Ni–2Mo pipe	A 312	8	TP316H	(26)	–325	75	30	20.0	*20.0*	*20.0*	**19.3**	**17.9**	**17.0**
18Cr–10Ni–Cb pipe	A 376	8	TP347H	(30)(36)	–325								
18Cr–10Ni–Cb pipe	A 312	8	TP347	(28)	–425								
Type 347 A 240	A 358	8	347	(28)(30)(36)	–425								
18Cr–10Ni–Cb pipe	A 376	8	TP347	(28)(30)(36)	–425								
18Cr–10Ni–Cb pipe	A 409	8	TP347	(28)(30)(36)	–425	75	30	20.0	*20.0*	*20.0*	*20.0*	*19.9*	**19.3**
18Cr–10Ni–Cb pipe	A 312	8	TP348	(28)	–325								
Type 348 A 240	A 358	8	348	(28)(30)(36)	–325								
18Cr–10Ni–Cb pipe	A 376	8	TP348	(28)(30)(36)	–325								
18Cr–10Ni–Cb pipe	A 409	8	TP348	(28)(30)(36)	–325								
18Cr–10Ni–Cb pipe	A 312	8	TP347H										
18Cr–10Ni–Cb pipe	A 312	8	TP348H	. . .	–325	75	30	20.0	*20.0*	*20.0*	*20.0*	*19.9*	**19.3**

--`,,```,,,,````-`-`,,`,,`,`,,`---

Copyright ASME International
Provided by IHS under license with ASME
No reproduction or networking permitted without license from IHS
Not for Resale

Table A-1 Basic Allowable Stresses in Tension for Metals[1] (Cont'd)

Numbers in Parentheses Refer to Notes for Appendix A Tables; Specifications Are ASTM Unless Otherwise Indicated

Basic Allowable Stress *S*, ksi (1), at Metal Temperature, °F (7)																		Grade	Spec. No.
650	700	750	800	850	900	950	1000	1050	1100	1150	1200	1250	1300	1350	1400	1450	1500		
																		Stainless Steel (3)(4) (Cont'd) Pipes and Tubes (2) (Cont'd)	
19.0	**18.6**	**18.5**	**18.4**	*18.2*	*18.1*	*18.1*	*18.0*	*12.1*	9.1	6.1	4.4	3.3	2.2	1.5	1.2	0.9	0.8	TP347	A 312
																		347	A 358
																		TP347	A 376
																		TP347	A 409
																		TP348	A 312
																		348	A 358
																		TP348	A 376
																		TP348	A 409
18.8	**18.3**	**18.0**	**17.4**	*13.5*	*13.3*	*12.4*	10.5	8.4	6.4	5.0	3.7	2.9	2.3	1.7	1.3	0.9	0.8	CPH10 or CPH20	A 451
18.8	**18.3**	**18.0**	**17.5**	*14.6*	*13.9*	*12.5*	11.0	9.8	8.5	7.3	6.0	4.8	3.5	2.3	1.6	1.1	0.8	TP310	A 312
																		310S	A 358
18.0	**17.5**	**17.2**	**17.1**	*14.0*	*13.9*	*13.7*	*13.4*	*13.0*	*10.8*	8.0	5.0	3.5	2.7	2.0	1.4	1.1	1.0	CPF8C	A 451
																		TP321	A 312
																		321	A 358
17.9	**17.5**	**17.2**	**16.9**	*16.7*	*16.6*	*16.4*	*16.2*	*11.7*	9.1	6.9	5.4	4.1	3.2	2.5	1.9	1.5	1.1	TP321	A 376
																		TP321	A 409
																		TP321H	A 376
																		TP321H	A 312
																		TP316	A 269
																		TP316	A 312
																		316	A 358
16.7	**16.3**	**16.1**	**15.9**	**15.7**	**15.5**	**15.4**	**15.3**	*14.5*	*12.4*	9.8	7.4	5.5	4.1	3.1	2.3	1.7	1.3	TP316	A 376
																		TP316	A 409
																		TP317	A 312
																		TP317	A 409
																		TP316H	A 376
16.7	**16.3**	**16.1**	**15.9**	**15.7**	**15.5**	**15.4**	**15.3**	*14.5*	*12.4*	9.8	7.4	5.5	4.1	3.1	2.3	1.7	1.3	TP316H	A 312
																		TP347H	A 376
																		TP347	A 312
																		347	A 358
																		TP347	A 376
19.0	**18.6**	**18.5**	**18.4**	**18.2**	**18.1**	**18.1**	**18.0**	*17.1*	*14.2*	10.5	7.9	5.9	4.4	3.2	2.5	1.8	1.3	TP347	A 409
																		TP348	A 312
																		348	A 358
																		TP348	A 376
																		TP348	A 409
																		TP347H	A 312
19.0	**18.6**	**18.5**	**18.4**	**18.2**	**18.1**	**18.1**	**18.0**	*17.1*	*14.2*	10.5	7.9	5.9	4.4	3.2	2.5	1.8	1.3	TP348H	A 312

Copyright ASME International
Provided by IHS under license with ASME
No reproduction or networking permitted without license from IHS
Not for Resale

(04)

Table A-1 Basic Allowable Stresses in Tension for Metals[1] (Cont'd)

Numbers in Parentheses Refer to Notes for Appendix A Tables; Specifications Are ASTM Unless Otherwise Indicated

Material	Spec. No.	P-No. or S-No. (5)	Grade	Notes	Min. Temp., °F (6)	Specified Min. Strength, ksi		Min. Temp. to 100	200	300	400	500	600
						Tensile	Yield						
Stainless Steel (3)(4) (Cont'd)													
Pipes and Tubes (2) (Cont'd)													
18Cr–8Ni tube	A 269	8	TP304	(14)(26)(28)(31)(36)	–425								
18Cr–8Ni pipe	A 312	8	TP304	(26)(28)	–425								
Type 304 A 240	A 358	8	304	(26)(28)(31)(36)	–425	75	30	20.0	*20.0*	*20.0*	**18.7**	**17.5**	**16.4**
18Cr–8Ni pipe	A 376	8	TP304	(20)(26)(28)(31)(36)	–425								
18Cr–8Ni pipe	A 376	8	TP304H	(26)(31)(36)	–325								
18Cr–8Ni pipe	A 409	8	TP304	(26)(28)(31)(36)	–425								
18Cr–8Ni pipe	A 312	8	TP304H	(26)	–325	75	30	20.0	*20.0*	*20.0*	**18.7**	**17.5**	**16.4**
18Cr–10Ni–Mo	A 451	8	CPF8M	(26)(28)	–425	70	30	20.0	*20.0*	*20.0*	**19.4**	**18.1**	**17.1**
20Cr–Cu tube	A 268	10	TP443										
27Cr tube	A 268	10I	TP446	(35)	–20	70	40	23.3	23.3	21.4	20.4	19.4	18.4
24Cr–9Ni–N	A 451	8	CPE20N	(35)(39)	–325	80	40	26.7	26.2	24.9	23.3	22.0	21.4
23Cr–4Ni–N	A 789												
23Cr–4Ni–N	A 790	10H	S32304	(25)	–60	87	58	29.0	27.9	26.3	25.3	24.9	24.5
12¾Cr	A 426	6	CPCA-15	(10)(35)	–20	90	65	30.0	...	...	...	...	...
22Cr–5Ni–3Mo	A 789												
22Cr–5Ni–3Mo	A 790	10H	S31803	(25)	–60	90	65	30.0	30.0	28.9	27.9	27.2	26.9
26Cr–4Ni–Mo	A 789												
26Cr–4Ni–Mo	A 790	10H	S32900	(25)	–20	90	70	30.0	...	...	...	...	...
25Cr–8Ni–3Mo–W–Cu–N	A 789												
25Cr–8Ni–3Mo–W–Cu–N	A 790	S-10H	S32760	(25)	–60	109	80	36.3	35.9	34.4	34.0	34.0	34.0
25Cr–7Ni–4Mo–N	A 789												
25Cr–7Ni–4Mo–N	A 790	10H	S32750	(25)	–20	116	80	38.7	35.0	33.1	31.9	31.4	31.2
24Cr–17Ni–6Mn–4½Mo–N	A 358	S-8	S34565	(36)	-325	115	60	38.3	*38.1*	*35.8*	*34.5*	*33.8*	*33.2*
Plates and Sheets													
18Cr–10Ni	A 240	8	305	(26)(36)(39)	–325	70	25	16.7	...	...	...	...	...
12Cr–Al	A 240	7	405	(35)	–20	60	25	16.7	15.3	14.8	14.5	14.3	14.0
18Cr–8Ni	A 240	8	304L	(36)	–425	70	25	16.7	*16.7*	*16.7*	**15.6**	**14.8**	**14.0**
16Cr–12Ni–2Mo	A 240	8	316L	(36)	–425	70	25	16.7	*16.7*	*16.7*	**15.5**	**14.4**	**13.5**
18Cr–Ti–Al	A 240	...	X8M	(35)	–20	65	30	20.0	...	...	...	...	...
18Cr–8Ni	A 167	S-8	302B	(26)(28)(31)(36)(39)	–325	75	30	20.0	*20.0*	*20.0*	**18.7**	**17.4**	**16.4**
18Cr–Ni	A 240	8	302	(26)(36)	–325	75	30	20.0	*20.0*	*20.0*	**18.7**	**17.4**	**16.4**
13Cr	A 240	7	410S	(35)(50)	–20	60	30	20.0	18.4	17.7	17.4	17.2	16.8
13Cr	A 240	6	410	(35)	–20	65	30	20.0	18.4	17.7	17.4	17.2	16.8
15Cr	A 240	6	429										
17Cr	A 240	7	430	(35)	–20	65	30	20.0	18.4	17.7	17.4	17.2	16.8

Copyright ASME International
Provided by IHS under license with ASME
No reproduction or networking permitted without license from IHS
Not for Resale

Table A-1 Basic Allowable Stresses in Tension for Metals[1] (Cont'd)

Numbers in Parentheses Refer to Notes for Appendix A Tables; Specifications Are ASTM Unless Otherwise Indicated

Basic Allowable Stress *S*, ksi (1), at Metal Temperature, °F (7)																			
650	700	750	800	850	900	950	1000	1050	1100	1150	1200	1250	1300	1350	1400	1450	1500	Grade	Spec. No.
																		Stainless Steel (3)(4) (Cont'd)	
																		Pipes and Tubes (2) (Cont'd)	
																		TP304	A 269
																		TP304	A 312
16.2	**16.0**	**15.6**	**15.2**	**14.9**	*14.6*	*14.4*	*13.8*	*12.2*	9.7	7.7	6.0	4.7	3.7	2.9	2.3	1.8	1.4	304	A 358
																		TP304	A 376
																		TP304H	A 376
																		TP304	A 409
16.2	**16.0**	**15.6**	**15.2**	**14.9**	*14.6*	*14.4*	*13.8*	*12.2*	9.7	7.7	6.0	4.7	3.7	2.9	2.3	1.8	1.4	TP304H	A 312
16.7	**16.2**	**15.8**	**15.5**	*14.7*	*14.4*	*14.0*	*13.4*	11.4	9.3	8.0	6.8	5.3	4.0	3.0	2.3	1.9	1.4	CPF8M	A 451
																		TP443	A 268
18.0	17.5	16.9	16.2	15.1	13.0	6.9	4.5	...	...	...	...	...	...	...	...	...	...	TP446	A 268
21.3	21.2	21.1	21.0	20.8	20.5	...	...	...	...	...	...	...	...	...	...	...	...	CPE20N	A 451
...	...	...	...	...	...	...	...	...	...	...	...	...	...	...	...	...	...	S32304	A 789, A 790
...	...	...	...	...	...	...	...	...	...	...	...	...	...	...	...	...	...	CPCA-15	A 426
...	...	...	...	...	...	...	...	...	...	...	...	...	...	...	...	...	...	S31803	A 789, A 790
...	...	...	...	...	...	...	...	...	...	...	...	...	...	...	...	...	...	S32900	A 789, A 790
...	...	...	...	...	...	...	...	...	...	...	...	...	...	...	...	...	...	S32760	A 789, A 790
...	...	...	...	...	...	...	...	...	...	...	...	...	...	...	...	...	...	S32750	A 789, A 790
33.1	*32.7*	*32.4*	*32.0*	...	...	...	...	...	...	...	...	...	...	...	...	...	...	S34565	A 358
																		Plates and Sheets	
...	...	...	...	...	...	...	...	...	...	...	...	...	...	...	...	...	...	305	A 240
13.8	13.5	11.6	11.1	10.4	9.6	8.4	4.0	...	...	...	...	...	...	...	...	...	...	405	A 240
13.7	**13.5**	**13.3**	**13.0**	**12.8**	*11.9*	*9.9*	7.8	6.3	5.1	4.0	3.2	2.6	2.1	1.7	1.1	1.0	0.9	304L	A 240
13.2	**12.9**	**12.6**	**12.4**	**12.1**	**11.8**	**11.5**	**11.2**	**10.8**	*10.2*	*8.8*	6.4	4.7	3.5	2.5	1.8	1.3	1.0	316L	A 240
...	...	...	...	...	...	...	...	...	...	...	...	...	...	...	...	...	...	X8M	A 240
16.1	**15.9**	**15.6**	**15.2**	**14.9**	**14.3**	*13.7*	...	...	...	...	...	...	...	...	...	...	...	302B	A 167
16.1	**15.9**	**15.6**	**15.2**	**14.9**	**14.6**	**14.3**	*13.7*	...	...	...	...	...	...	...	...	...	...	302	A 240
16.5	16.2	15.7	15.1	10.4	9.6	8.4	6.4	4.4	2.9	1.7	1.0	...	...	...	...	...	...	410S	A 240
16.5	16.2	15.7	15.1	11.2	10.4	8.8	6.4	4.4	2.9	1.7	1.0	...	...	...	...	...	...	410	A 240
																		429	A 240
16.5	16.2	15.7	15.1	11.2	10.4	9.2	9.5	4.5	3.2	2.4	1.7	...	...	...	...	...	...	430	A 240

Copyright ASME International
Provided by IHS under license with ASME
No reproduction or networking permitted without license from IHS
Not for Resale

(04)

Table A-1 Basic Allowable Stresses in Tension for Metals[1] (Cont'd)

Numbers in Parentheses Refer to Notes for Appendix A Tables; Specifications Are ASTM Unless Otherwise Indicated

Material	Spec. No.	P-No. or S-No. (5)	Grade	Notes	Min. Temp., °F (6)	Specified Min. Strength, ksi Tensile	Specified Min. Strength, ksi Yield	Min. Temp. to 100	200	300	400	500	600
Stainless Steel (3)(4) (Cont'd) Plates and Sheets (Cont'd)													
18Cr–13Ni–3Mo	A 240	8	317L	(36)	–325	75	30	20.0	*20.0*	*20.0*	**18.9**	**17.7**	**16.8**
25Cr–20Ni	A 167	S-8	310	(28)(35)(36)(39)	–325	75	30	20.0	*20.0*	*20.0*	*20.0*	*20.0*	**19.2**
25Cr–20Ni	A 240	8	310S	(28)(35)(36)									
18Cr–10Ni–Ti	A 240	8	321	(30)(36)	–325	75	30	20.0	*20.0*	*20.0*	**20.0**	**19.3**	**18.3**
20Cr–10Ni	A 167	S-8	308	(6)(26)(31)(39)	–325	75	30	20.0	16.7	15.0	13.6	12.5	11.6
23Cr–12Ni	A 167	S-8	309	(12)(28)(31)(35)(36)(39)									
23Cr–12Ni	A 240	8	309S	(28)(35)(36)	–325	75	30	20.0	*20.0*	*20.0*	*20.0*	*20.0*	**19.2**
18Cr–10Ni–Cb	A 240	8	347	(36)	–425	75	30	20.0	*20.0*	*20.0*	*20.0*	*19.9*	**19.3**
18Cr–10Ni–Cb	A 240	8	348	(36)	–325								
25Cr–20Ni	A 167	S-8	310	(28)(29)(35)(36)(39)									
25Cr–20Ni	A 240	8	310S	(28)(29)(35)(36)	–325	75	30	20.0	*20.0*	*20.0*	*20.0*	*20.0*	**19.2**
18Cr–10Ni–Ti	A 240	8	321	(28)(30)(36)									
18Cr–10Ni–Ti	A 240	8	321H	(36)	–325	75	30	20.0	*20.0*	*20.0*	**20.0**	**19.3**	**18.3**
16Cr–12Ni–2Mo	A 240	8	316	(26)(28)(36)	–425								
18Cr–13Ni–3Mo	A 240	8	317	(26)(28)(36)	–325	75	30	20.0	*20.0*	*20.0*	**19.3**	**17.9**	**17.0**
18Cr–10Ni–Cb	A 167	8	347	(28)(30)(36)									
18Cr–10Ni–Cb	A 240	8	347	(28)(36)	–425								
18Cr–10Ni–Cb	A 167	8	348	(28)(30)(36)		75	30	20.0	*20.0*	*20.0*	*20.0*	*19.9*	**19.3**
18Cr–10Ni–Cb	A 240	8	348	(28)(36)	–325								
18Cr–8Ni	A 240	8	304	(26)(28)(36)	–426	75	30	20.0	*20.0*	*20.0*	**18.7**	**17.5**	**16.4**
25Cr–8Ni–3Mo–W–Cu–N	A 240	S-10H	S32760	(25)	–60	109	80	36.3	35.9	34.4	34.0	34.0	34.0
Forgings and Fittings (2)													
18Cr–13Ni–3Mo ≤ 5 in. thk.	A 182	8	F317L	(9)(21a)	–325	70	25	16.7	*16.7*	**16.0**	**15.6**	**14.8**	**14.0**
18Cr–8Ni	A 182	8	F304L	(9)(21a)	–425								
18Cr–8Ni	A 403	8	WP304L	(32)(37)	–425	70	25	16.7	*16.7*	*16.7*	*15.8*	*14.8*	*14.0*
16Cr–12Ni–2Mo	A 182	8	F316L	(9)(21a)	–425								
16Cr–12Ni–2Mo	A 403	8	WP316L	(32)(37)	–425	70	25	16.7	*16.7*	*16.7*	**15.5**	**14.4**	**13.5**
20Ni–8Cr	A 182	8	F10	(26)(28)(39)	–325	80	30	20.0	...	...	...	...	...
18Cr–13Ni–3Mo	A 403	8	WP317L	(32)(37)	–325	75	30	20.0	*20.0*	*20.0*	**18.9**	**17.7**	**16.8**
25Cr–20Ni	A 182	8	F310	(9)(21)(28)(35)(39)	–325								
25Cr–20Ni	A 403	8	WP310	(28)(32)(35)(37)(39)	–325	75	30	20.0	*20.0*	*20.0*	*20.0*	*20.0*	**19.2**

Copyright ASME International
Provided by IHS under license with ASME
No reproduction or networking permitted without license from IHS
Not for Resale

Table A-1 Basic Allowable Stresses in Tension for Metals[1] (Cont'd)

Numbers in Parentheses Refer to Notes for Appendix A Tables; Specifications Are ASTM Unless Otherwise Indicated

Basic Allowable Stress *S*, ksi (1), at Metal Temperature, °F (7)																			
650	700	750	800	850	900	950	1000	1050	1100	1150	1200	1250	1300	1350	1400	1450	1500	Grade	Spec. No.
																		Stainless Steel (3)(4) (Cont'd) Plates and Sheets (Cont'd)	
16.6	16.2	15.8	15.5	15.2	...	...	...	...	...	...	...	...	...	...	...	...	...	317L	A 240
18.8	18.3	18.0	17.5	*14.6*	*13.9*	*12.5*	11.0	7.1	5.0	3.6	2.5	1.5	0.8	0.5	0.4	0.3	0.2	310	A 167
																		310S	A 240
17.9	17.5	17.2	16.9	16.7	16.6	16.4	*16.2*	9.6	6.9	5.0	3.6	2.6	1.7	1.1	0.8	0.5	0.3	321	A 240
11.2	10.8	10.4	10.0	*9.7*	*9.4*	9.1	8.8	8.5	7.5	5.7	4.5	3.2	2.4	1.8	1.4	1.0	0.7	308	A 167
																		309	A 167
18.8	18.3	18.0	17.5	*14.6*	*13.9*	*12.5*	10.5	8.5	6.5	5.0	3.8	2.9	2.3	1.8	1.3	0.9	0.7	309S	A 240
19.0	18.6	18.5	18.4	*18.2*	*18.1*	*18.1*	*13.0*	*12.1*	9.1	6.1	4.4	3.3	2.2	1.5	1.2	0.9	0.8	347	A 240
																		348	A 240
																		310	A 167
18.8	18.3	18.0	17.5	*14.6*	*13.9*	*12.5*	11.0	9.8	8.5	7.3	6.0	4.8	3.5	2.3	1.6	1.1	0.8	310S	A 240
																		321	A 240
17.9	17.5	17.2	16.9	16.7	16.6	16.4	*16.2*	*11.7*	9.1	6.9	5.4	4.1	3.2	2.5	1.9	1.5	1.1	321H	A 240
																		316	A 240
16.7	16.3	16.1	15.9	15.7	15.5	15.4	15.3	*14.5*	*12.4*	9.8	7.4	5.5	4.1	3.1	2.3	1.7	1.3	317	A 240
																		347	A 167
																		347	A 240
19.0	18.6	18.5	18.4	18.2	18.1	18.1	18.0	17.1	14.2	10.5	7.9	5.9	4.9	3.2	2.5	1.8	1.3	348	A 167
																		348	A 240
16.2	16.0	15.6	15.2	14.9	14.6	14.4	*13.8*	*12.2*	9.7	7.7	6.0	4.7	3.7	2.9	2.3	1.8	1.4	304	A 240
...	...	...	...	...	...	...	...	...	...	...	...	...	...	...	...	...	...	S32760	A 240
																		Forgings and Fittings (2)	
13.8	13.5	13.2	13.0	12.7	...	...	...	...	...	...	...	...	...	...	...	...	...	F317L	A 182
																		F304L	A 182
13.7	13.5	13.3	13.0	12.8	*11.9*	*9.9*	7.8	6.3	5.1	4.0	3.2	2.6	2.1	1.7	1.1	1.0	0.9	WP304L	A 403
																		F316L	A 182
13.2	12.9	12.6	12.4	12.1	11.8	11.5	11.2	10.8	*10.2*	*8.8*	6.4	4.7	3.5	2.5	1.8	1.3	1.0	WP316L	A 403
...	...	...	...	...	...	...	...	...	...	...	...	...	...	...	...	...	...	F10	A 182
16.6	16.2	15.8	15.5	15.2	...	...	...	...	...	...	...	...	...	...	...	...	...	WP317L	A 403
																		F310	A 182
18.8	18.3	18.0	17.5	*14.6*	*13.9*	*12.5*	11.0	7.1	5.0	3.6	2.5	1.5	0.8	0.5	0.4	0.3	0.2	WP310	A 403

Copyright ASME International
Provided by IHS under license with ASME
No reproduction or networking permitted without license from IHS
Not for Resale

Table A-1 Basic Allowable Stresses in Tension for Metals[1] (Cont'd)

Numbers in Parentheses Refer to Notes for Appendix A Tables; Specifications Are ASTM Unless Otherwise Indicated

Material	Spec. No.	P-No. or S-No. (5)	Grade	Notes	Min. Temp., °F (6)	Specified Min. Strength, ksi		Min. Temp. to 100	200	300	400	500	600
						Tensile	Yield						
Stainless Steel (3)(4) (Cont'd) Forgings and Fittings (2) (Cont'd)													
18Cr–10Ni–Ti	A 182	8	F321	(9)(21)	–325								
18Cr–10Ni–Ti	A 403	8	WP321	(32)(37)	–325	75	30	20.0	*20.0*	*20.0*	**20.0**	**19.3**	**18.3**
23Cr–12Ni	A 403	8	WP309	(28)(32)(35)(37) (39)	–325	75	30	20.0	*20.0*	*20.0*	*20.0*	*20.0*	**19.2**
25Cr–20Ni	A 182	8	F310	(9)(21)(28)(29) (35)(39)	–325								
25Cr–20Ni	A 403	8	WP310	(28)(29)(32)(35) (37)(39)	–325	75	30	20.0	*20.0*	*20.0*	*20.0*	*20.0*	**19.2**
18Cr–10Ni–Cb	A 182	8	F347	(9)(21)	–425								
18Cr–10Ni–Cb	A 403	8	WP347	(32)(37)	–425								
18Cr–10Ni–Cb	A 182	8	F348	(9)(21)	–325	75	30	20.0	*20.0*	*20.0*	*20.0*	*19.9*	**19.3**
18Cr–10Ni–Cb	A 403	8	WP348	(32)(37)	–325								
18Cr–10Ni–Ti	A 182	8	F321	(9)(21)(28)(30)									
18Cr–10Ni–Ti	A 182	8	F321H	(9)(21)	–325								
18Cr–10Ni–Ti	A 403	8	WP321	(28)(30)(32)(37)		75	30	20.0	*20.0*	*20.0*	**20.0**	**19.3**	**18.3**
18Cr–10Ni–Ti	A 403	8	WP321H	(32)(37)	–325								
16Cr–12Ni–2Mo	A 403	8	WP316H	(26)(32)(37)	–325	75	30	20.0	*20.0*	*20.0*	**19.3**	**17.9**	**17.0**
16Cr–12Ni–2Mo	A 182	8	F316H	(9)(21)(26)	–325	75	30	20.0	*20.0*	*20.0*	**19.3**	**17.9**	**17.0**
18Cr–10Ni–Cb	A 403	8	WP347H	(32)(37)	–325								
18Cr–10Ni–Cb	A 182	8	F347	(9)(21)(28)	–425								
18Cr–10Ni–Cb	A 403	8	WP347	(28)(32)(37)	–425								
18Cr–10Ni–Cb	A 182	8	F348	(9)(21)(28)	–325	75	30	20.0	*20.0*	*20.0*	*20.0*	*19.9*	**19.3**
18Cr–10Ni–Cb	A 403	8	WP348	(28)(32)(37)	–325								
18Cr–10Ni–Cb	A 182	8	F347H										
18Cr–10Ni–Cb	A 182	8	F348H	(9)(21)	–325	75	30	20.0	*20.0*	*20.0*	*20.0*	*19.9*	*19.3*
16Cr–12Ni–2Mo	A 182	8	F316	(9)(21)(26)(28)	–325								
16Cr–12Ni–2Mo	A 403	8	WP316	(26)(28)(32)(37)	–425	75	30	20.0	*20.0*	*20.0*	**19.3**	**17.9**	**17.0**
18Cr–13Ni–3Mo	A 403	8	WP317	(26)(28)(32)	–325								
18Cr–8Ni	A 182	8	F304	(9)(21)(26)(28)	–425								
18Cr–8Ni	A 403	8	WP304	(26)(28)(32)(37)	–425	75	30	20.0	*20.0*	*20.0*	**18.7**	**17.5**	**16.4**
18Cr–8Ni	A 403	8	WP304H	(26)(32)(37)	–325								
18Cr–8Ni	A 182	8	F304H	(9)(21)(26)	–325	75	30	20.0	*20.0*	*20.0*	**18.7**	**17.5**	**16.4**
13Cr	A 182	6	F6a Cl. 1	(35)	–20	70	40	23.3	23.3	22.6	22.4	22.0	21.5
13Cr	A 182	6	F6a Cl. 2	(35)	–20	85	55	28.3	28.3	27.8	27.2	26.8	26.1
25Cr–8Ni–3Mo–W–Cu–N	A 182												
25Cr–8Ni–3Mo–W–Cu–N	A 815	S-10H	S32760	(25)	–60	109	80	36.3	35.9	34.4	34.0	34.0	34.0
13Cr	A 182	S-6	F6a Cl. 3	(35)	–20	110	85	36.6	...	...	...	...	...
13Cr–½Mo	A 182	6	F6b	(35)	...	110–135	90	36.6	...	...	...	...	...
13Cr	A 182	S-6	F6a Cl. 4	(35)	–20	130	110	43.3	...	...	...	...	...

Copyright ASME International
Provided by IHS under license with ASME
No reproduction or networking permitted without license from IHS
Not for Resale

Table A-1 Basic Allowable Stresses in Tension for Metals[1] (Cont'd)

Numbers in Parentheses Refer to Notes for Appendix A Tables; Specifications Are ASTM Unless Otherwise Indicated

Basic Allowable Stress *S*, ksi (1), at Metal Temperature, °F (7)																			
650	700	750	800	850	900	950	1000	1050	1100	1150	1200	1250	1300	1350	1400	1450	1500	Grade	Spec. No.
																		Stainless Steel (3)(4) (Cont'd) Forgings and Fittings (2) (Cont'd)	
17.9	17.5	17.2	16.9	16.7	16.6	16.4	*16.2*	9.6	6.9	5.0	3.6	2.6	1.7	1.1	0.8	0.5	0.3	F321	A 182
																		WP321	A 403
18.8	18.3	18.0	17.5	*14.6*	*13.9*	*12.5*	10.5	8.5	6.5	5.0	3.8	2.9	2.3	1.7	1.3	0.9	0.7	WP309	A 403
18.8	18.3	18.0	17.5	*14.6*	*13.9*	*12.5*	11.0	9.8	8.7	7.3	6.0	4.8	3.5	2.3	1.6	1.1	0.8	F310	A 182
																		WP310	A 403
19.0	18.6	18.5	18.4	*18.2*	*18.1*	*18.1*	*18.0*	*12.1*	9.1	6.1	4.4	3.3	2.2	1.5	1.2	0.9	0.8	F347	A 182
																		WP347	A 403
																		F348	A 182
																		WP348	A 403
17.9	17.5	17.2	16.9	16.7	16.6	16.4	*16.2*	*11.7*	9.1	6.9	5.4	4.1	3.2	2.5	1.9	1.5	1.1	F321	A 182
																		F321H	A 182
																		WP321	A 403
																		WP321H	A 403
16.7	16.3	16.1	15.9	15.7	15.5	15.4	15.3	*14.5*	*12.4*	9.8	7.4	5.5	4.1	3.1	2.3	1.7	1.3	WP316H	A 403
16.7	16.3	16.1	15.9	15.7	15.5	15.4	15.3	*14.5*	*12.4*	9.8	7.4	5.5	4.1	3.1	2.3	1.7	1.3	F316	A 182
19.0	18.6	18.5	18.4	18.2	18.1	18.1	18.0	*17.1*	14.2	10.5	7.9	5.9	4.4	3.2	2.5	1.8	1.3	WP347H	A 403
																		F347	A 182
																		WP347	A 403
																		F348	A 182
																		WP348	A 403
19.0	18.6	18.5	18.4	18.2	18.1	18.1	18.0	*17.1*	*14.2*	10.5	7.9	5.9	4.4	3.2	2.5	1.8	1.3	F347H	A 182
																		F348H	A 182
16.7	16.3	16.1	15.9	15.7	15.5	15.4	15.3	*14.5*	*12.4*	9.8	7.4	5.5	4.1	3.1	2.3	1.7	1.3	F316	A 182
																		WP316	A 403
																		WP317	A 403
16.2	16.0	15.6	15.2	14.9	14.6	14.4	13.8	*12.2*	9.7	7.7	6.0	4.7	3.7	2.9	2.3	1.8	1.4	F304	A 182
																		WP304	A 403
16.2	16.0	15.6	15.2	14.9	14.6	14.4	*13.8*	*12.2*	9.7	7.7	6.0	4.7	3.7	2.9	2.3	1.8	1.4	WP304H	A 403
																		F304H	A 182
21.1	20.6	19.9	19.1	11.2	10.4	8.8	6.4	...	...	...	...	...	...	...	...	...	...	F6a Cl. 1	A 182
25.7	25.0	24.4	23.2	14.4	12.3	8.8	6.4	4.4	2.9	1.8	1.0	...	...	...	...	...	...	F6a Cl. 2	A 182
...	...	...	...	...	...	...	...	...	...	...	...	...	...	...	...	...	...	S32760	A 182
																		S32760	A 815
...	...	...	...	...	...	...	...	...	...	...	...	...	...	...	...	...	...	F6a Cl. 3	A 182
...	...	...	...	...	...	...	...	...	...	...	...	...	...	...	...	...	...	F6b	A 182
...	...	...	...	...	...	...	...	...	...	...	...	...	...	...	...	...	...	F6a Cl. 4	A 182

Copyright ASME International
Provided by IHS under license with ASME
No reproduction or networking permitted without license from IHS
Not for Resale

Table A-1 Basic Allowable Stresses in Tension for Metals[1] (Cont'd)

Numbers in Parentheses Refer to Notes for Appendix A Tables; Specifications Are ASTM Unless Otherwise Indicated

Material	Spec. No.	P-No. or S-No. (5)	Grade	Notes	Min. Temp., °F (6)	Specified Min. Strength, ksi		Min. Temp. to 100	200	300	400	500	600
						Tensile	Yield						
Stainless Steel (3)(4) (Cont'd)													
Bar													
18Cr–8Ni	A 479	8	304	(26)(28)(31)	–425	75	30	20.0	20.0	20.0	18.7	17.5	16.4
Castings (2)													
28Ni–20Cr–2Mo–3Cb	A 351	45	CN7M	(9)(30)	–325	62	25	16.6	...	...	...	...	...
35Ni–15Cr–Mo	A 351	S-45	HT30	(36)(39)	–325	65	28	18.6	...	...	...	...	...
25Cr–13Ni	A 351	8	CH8	(9)(31)	–325	65	28	18.6	*18.6*	*18.6*	*18.6*	*18.6*	**18.0**
25Cr–20Ni	A 351	8	CK20	(9)(27)(31)(35)(39)	–325	65	28	18.6	*18.6*	*18.6*	*18.6*	*18.6*	**18.0**
15Cr–15Ni–2Mo–Cb	A 351	S-8	CF10MC	(30)	–325	70	30	20.0	...	...	...	...	...
18Cr–8Ni	A 351	8	CF3	(9)	–425	70	30	20.0	*20.0*	**19.7**	**17.6**	**16.4**	**15.6**
17Cr–10Ni–2Mo	A 351	8	CF3M	(9)	–425	70	30	20.0	*18.0*	17.4	16.6	16.0	15.4
18Cr–8Ni	A 351	8	CF8	(9)(26)(27)(31)	–425	70	30	20.0	*20.0*	**20.0**	**18.7**	**17.4**	**16.4**
25Cr–13Ni	A 351	S-8	CH10	(27)(31)(35)	–325	70	30	20.0	*20.0*	*20.0*	*20.0*	*20.0*	**19.2**
25Cr–13Ni	A 351	8	CH20	(9)(27)(31)(35)(39)	–325	70	30	20.0	*20.0*	*20.0*	*20.0*	*20.0*	**19.2**
20Cr–10Ni–Cb	A 351	8	CF8C	(9)(27)(30)	–325	70	30	20.0	*20.0*	*20.0*	*19.3*	**18.6**	**18.5**
18Cr–10Ni–2Mo	A 351	8	CF8M	(9)(26)(27)(30)	–425	70	30	20.0	*20.0*	*20.0*	**19.4**	**18.1**	**17.1**
25Cr–20Ni	A 351	S-8	HK40	(35)(36)(39)	–325	62	35	20.6	...	...	...	...	...
25Cr–20Ni	A 351	8	HK30	(35)(39)	–325	65	35	21.6	...	...	...	...	...
18Cr–8Ni	A 351	8	CF3A	(9)(56)	–425	77	35	23.3	23.3	22.6	21.8	20.5	19.3
18Cr–8Ni	A 351	8	CF8A	(9)(26)(56)	–425	77	35	23.3	23.3	22.6	21.8	20.5	19.3
25Cr–10Ni–N	A 351	8	CE20N	(35)(39)	–325	80	40	26.7	26.2	24.9	23.3	22.0	21.4
12Cr	A 217	6	CA15	(35)	–20	90	65	30.0	21.5	20.8	20.0	19.3	18.8
24Cr–10Ni–Mo–N	A 351	10H	CE8MN	(9)	–60	95	65	31.7	31.6	29.3	28.2	28.2	28.2
25Cr–8Ni–3Mo–W–Cu–N	A 351	S-20H	CD3M-W-Cu-N	(9)(25)	–60	100	65	33.3	33.3	31.9	31.9	31.1	31.1
13Cr–4Ni	A 487	6	CA6NM Cl. A	(9)(35)	–20	110	80	36.7	36.7	35.4	35.0	34.4	33.7

Copyright ASME International
Provided by IHS under license with ASME
No reproduction or networking permitted without license from IHS
Not for Resale

Table A-1 Basic Allowable Stresses in Tension for Metals[1] (Cont'd)

Numbers in Parentheses Refer to Notes for Appendix A Tables; Specifications Are ASTM Unless Otherwise Indicated

Basic Allowable Stress *S*, ksi (1), at Metal Temperature, °F (7)																			
650	700	750	800	850	900	950	1000	1050	1100	1150	1200	1250	1300	1350	1400	1450	1500	Grade	Spec. No.
																		Stainless Steel (3)(4) (Cont'd)	
																		Bar	
16.2	16.0	15.6	15.2	14.9	14.7	14.4	14.1	12.4	9.8	7.7	6.1	4.7	3.7	2.9	2.3	1.8	1.4	304	A 479
																		Castings (2)	
...	...	...	...	...	...	...	...	...	...	...	...	...	...	...	...	...	...	CN7M	A 351
...	...	...	...	...	...	...	...	...	...	...	...	...	...	...	...	...	...	HT30	A 351
18.0	**17.1**	**16.7**	**16.4**	*12.7*	*12.5*	*11.7*	10.5	8.5	6.5	5.5	3.7	2.9	2.0	1.7	1.2	0.9	0.7	CH8	A 351
17.5	**17.1**	**16.7**	**16.4**	*12.7*	*12.5*	*11.9*	11.0	9.7	8.5	7.2	6.0	4.7	3.5	2.4	1.6	1.1	0.7	CK20	A 351
...	...	...	...	...	...	...	...	...	...	...	...	...	...	...	...	...	...	CF10MC	A 351
15.2	**15.1**	**14.9**	**14.7**	...	...	...	...	...	...	...	...	...	...	...	...	...	...	CF3	A 351
15.0	14.6	14.4	14.0	13.2	...	...	...	...	...	...	...	...	...	...	...	...	...	CF3M	A 351
16.1	**15.9**	**15.5**	**15.1**	*14.4*	*14.2*	*13.9*	*12.2*	9.5	7.5	6.0	4.8	3.9	3.3	2.7	2.3	2.0	1.7	CF8	A 351
																		CH10	A 351
18.7	**18.2**	**18.0**	**17.5**	*13.6*	*13.2*	*12.5*	10.5	8.5	8.5	5.0	3.7	2.9	2.0	1.7	1.2	0.9	0.7	CH20	A 351
18.4	**18.2**	**18.2**	**18.2**	*18.1*	*18.1*	*18.1*	*18.0*	*17.1*	*14.2*	10.5	7.9	5.4	4.4	3.2	2.5	1.8	1.3	CF8C	A 351
16.7	**16.2**	**15.7**	**15.6**	*14.7*	*14.5*	*14.0*	*13.1*	11.5	9.4	8.0	6.7	5.2	4.0	3.0	2.4	1.9	1.5	CF8M	A 351
...	...	...	...	...	...	...	...	...	...	...	...	...	...	...	...	...	...	HK40	A 351
...	...	...	...	...	...	...	...	...	...	...	...	...	...	...	...	...	...	HK30	A 351
																		CF3A	A 351
18.9	17.6	...	...	...	...	...	...	...	...	...	...	...	...	...	...	...	...	CF8A	A 351
21.3	21.2	21.1	21.0	20.8	20.5	...	...	...	...	...	...	...	...	...	...	...	...	CE20N	A 351
18.4	18.1	17.5	16.8	14.9	11.0	7.6	5.0	3.3	2.3	1.5	1.0	...	...	...	...	...	...	CA15	A 217
...	...	...	...	...	...	...	...	...	...	...	...	...	...	...	...	...	...	CE8MN	A 351
...	...	...	...	...	...	...	...	...	...	...	...	...	...	...	...	...	...	CD3M-W-Cu-N	A 351
33.2	32.6	...	...	...	...	...	...	...	...	...	...	...	...	...	...	...	...	CA6NM Cl. A	A 487

Copyright ASME International
Provided by IHS under license with ASME
No reproduction or networking permitted without license from IHS
Not for Resale

Table A-1 Basic Allowable Stresses in Tension for Metals[1] (Cont'd)

Numbers in Parentheses Refer to Notes for Appendix A Tables; Specifications Are ASTM Unless Otherwise Indicated

Material	Spec. No.	P-No. or S-No. (5)(46)	Class	Temper	Size Range, in.	Notes	Min. Temp., °F (6)	Specified Min. Strength, ksi Tensile	Yield
Copper and Copper Alloy Pipes and Tubes (2)									
Cu pipe	B 42	31	C10200, C12000, C12200	O61	...	...			
Cu tube	B 75	31	C10200, C12000, C12200	O50, O60	...	...			
Cu tube	B 68								
Cu tube	B 88	S-31	C12200	O50, O60	...	(24)	−452	30	9
Cu tube	B 280	S-31	C12200	O60	...	(24)			
Red brass pipe	B 43	32	C23000	O61	...	...	−452	40	12
90Cu–10Ni	B 467	34	C70600	WO50, WO61	> 4.5 O.D.				
90Cu–10Ni	B 466	34	C70600	Annealed	...	(14)	−452	38	13
90Cu–10Ni	B 467	34	C70600	WO50, WO61	≤ 4.5 O.D.	(14)	−452	40	15
70Cu–30Ni	B 467	34	C71500	WO50, WO61	> 4.5 O.D.	(14)	−452	45	15
80Cu–20Ni	B 466	34	C71000	Annealed	≤ 4.5 O.D.	(14)	−452	45	16
Cu pipe	B 42	31	C10200, C12000, C12200	H55	NPS 2½ thru 12				
Cu tube	B 75	31	C10200, C12000, C12200	H58	...	(14)(34)	−452	36	30
Cu tube	B 88	S-31	C12200	H55	...	(14)(24)(34)			
70Cu–30Ni	B 466	34	C71500	O60	...	(14)	− 452	52	18
70Cu–30Ni	B 467	34	C71500	WO50, WO61	≤ 4.5 O.D.	(14)	−452	50	20
Cu pipe	B 42	31	C10200, C12000, C12200	H80	NPS ⅛ thru 2				
Cu tube	B 75	31	C10200, C12000, C12200	H80	...	(14)(34)	−452	45	40
Plates and Sheets									
Cu	B 152	31	C10200, C10400, C10500, C10700 C12200, C12300	O25	...	(14)(24)	−452	30	10
90Cu–10Ni	B 171	34	C70600	...	≤ 2.5 thk.	(14)	−452	40	15
Cu–Si	B 96	33	C65500	O61	...	...	−452	52	18
70Cu–30Ni	B 171	34	C71500	...	≤ 2.5 thk.	(14)	−452	50	20
Al–bronze	B 169	35	C61400	O25, O60	≤ 2.0 thk.	(13)	−452	70	30

Symbols in Temper Column

O25 = hot rolled, annealed	WO61 = welded, fully finished, annealed
O50 = light annealed	H = drawn
O60 = soft annealed	H55 = light drawn
O61 = annealed	H58 = drawn, general purpose
WO50 = welded, annealed	H80 = hard drawn

Copyright ASME International
Provided by IHS under license with ASME
No reproduction or networking permitted without license from IHS
Not for Resale

Table A-1 Basic Allowable Stresses in Tension for Metals[1] (Cont'd)

Numbers in Parentheses Refer to Notes for Appendix A Tables; Specifications Are ASTM Unless Otherwise Indicated

Basic Allowable Stress *S*, ksi (1), at Metal Temperature, °F (7)														
Min. Temp. to 100	150	200	250	300	350	400	450	500	550	600	650	700	Class	Spec. No.
													Copper and Copper Alloy Pipes and Tubes (2)	
6.0	5.1	4.8	4.8	4.7	4.0	3.0	1.5	0.8	...	...	...	...	C10200, C12000, C12200	B 42
													C10200, C12000, C12200	B 75
													C12200	B 68
													C12200	B 88
													C12200	B 280
8.0	8.0	8.0	8.0	8.0	7.0	5.0	2.0	...	...	...	...	...	C23000	B 43
8.7	8.4	8.3	8.0	7.8	7.7	7.6	7.5	7.3	7.0	6.0	...	...	C70600	B 467
													C70600	B 466
10.0	9.7	9.5	9.3	9.0	8.7	8.7	8.6	8.0	7.0	6.0	...	...	C70600	B 467
10.0	9.6	9.5	9.2	9.1	8.8	8.6	8.4	8.2	8.1	8.0	7.9	7.8	C71500	B 467
10.7	10.6	10.5	10.4	10.3	10.1	9.9	9.6	9.3	8.9	8.4	7.7	7.0	C71000	B 466
12.0	12.0	12.0	12.0	11.6	11.4	10.5	...	...	...	...	...	...	C10200, C12000, C12200	B 42
													C10200, C12000, C12200	B 75
													C12200	B 88
12.0	11.6	11.3	11.0	10.8	10.6	10.3	10.1	9.9	9.8	9.6	9.5	9.4	C71500	B 466
13.3	12.7	12.3	12.1	11.8	11.7	11.6	11.5	11.4	11.3	11.2	11.1	10.4	C71500	B 467
15.0	15.0	15.0	15.0	14.7	13.7	4.3	...	...	...	...	...	...	C10200, C12000, C12200	B 42
													C10200, C12000, C12200	B 75
													Plates and Sheets	
6.7	5.8	5.5	5.2	5.1	4.0	3.0	1.5	0.8	...	...	...	...	C10200, C10400, C10500, C10700, C12200, C12300	B 152
10.0	9.7	9.5	9.3	9.0	8.7	8.7	8.6	8.0	7.0	6.0	...	...	C70600	B 171
12.0	12.0	11.9	11.7	10.0	5.0	...	...	...	...	...	...	...	C65500	B 96
13.3	12.7	12.3	12.1	11.8	11.7	11.6	11.5	11.4	11.3	11.2	11.1	10.4	C71500	B 171
20.0	20.0	19.9	19.8	19.6	19.4	19.2	19.1	19.0	...	...	...	...	C61400	B 169

Copyright ASME International
Provided by IHS under license with ASME
No reproduction or networking permitted without license from IHS
Not for Resale

Table A-1 Basic Allowable Stresses in Tension for Metals[1] (Cont'd)

Numbers in Parentheses Refer to Notes for Appendix A Tables; Specifications Are ASTM Unless Otherwise Indicated

Material	Spec. No.	P-No. or S-No. (5)(46)	Class	Temper	Size Range, in.	Notes	Min. Temp., °F (6)	Specified Min. Strength, ksi Tensile	Yield
Copper and Copper Alloy (Cont'd)									
Forgings									
Cu	B 283	S-31	C11000	...	...	(14)	−452	33	11
High Si–bronze (A)	B 283	S-33	C65500	...	...	(14)	−452	52	18
Forging brass	B 283	a	C37700	...	...	(14)	−325	58	23
Leaded naval brass	B 283	a	C48500	...	...	(14)	−325	62	24
Naval brass	B 283	S-32	C46400	...	...	(14)	−425	64	26
Mn–bronze (A)	B 283	S-32	C67500	...	...	(14)	−325	72	34
Castings (2)									
Composition bronze	B 62	a	C83600	...	...	(9)	−325	30	14
Leaded Ni–bronze	B 584	a	C97300	...	...	...	−325	30	15
Leaded Ni–bronze	B 584	a	C97600	...	...	...	−325	40	17
Leaded Sn–bronze	B 584	a	C92300	...	...	...	−325	36	16
Leaded Sn–bronze	B 584	a	C92200	...	...	...	−325	34	16
Steam bronze	B 61	a	C92200	...	...	(9)	−325	34	16
Sn–bronze	B 584	b	C90300	...	...	...	−325	40	18
Sn–bronze	B 584	b	C90500	...	...	...	−325	40	18
Leaded Mn–bronze	B 584	a	C86400	...	...	(9)	−325	60	20
Leaded Ni–bronze	B 584	a	C97800	...	...	...	−325	50	22
No. 1 Mn–bronze	B 584	b	C86500	...	...	...	−325	65	25
Al–bronze	B 148	S-35	C95200	...	...	(9)			
Al–bronze	B 148	S-35	C95300	...	...	...	−425	65	25
Si–Al–bronze	B 148	S-35	C95600	...	...	...	−325	60	28
Al–bronze	B 148	S-35	C95400	...	...	...	−325	75	30
Mn–bronze	B 584	a	C86700	...	...	...	−325	80	32
Al–bronze	B 148	S-35	C95500	...	...	...	−452	90	40
High strength Mn–bronze	B 584	b	C86200	...	...	...	−325	90	45
High strength Mn–bronze	B 584	b	C86300	...	...	...	−325	110	60

Copyright ASME International
Provided by IHS under license with ASME
No reproduction or networking permitted without license from IHS
Not for Resale

Table A-1 Basic Allowable Stresses in Tension for Metals[1] (Cont'd)

Numbers in Parentheses Refer to Notes for Appendix A Tables; Specifications Are ASTM Unless Otherwise Indicated

Basic Allowable Stress *S*, ksi (1), at Metal Temperature, °F (7)														
Min. Temp. to 100	150	200	250	300	350	400	450	500	550	600	650	700	Class	Spec. No.
													Copper and Copper Alloy (Cont'd) Forgings	
7.3	6.7	6.5	6.3	5.0	3.8	2.5	1.5	0.8	...	...	...	...	C11000	B 283
12.0	10.0	10.0	10.0	10.0	5.0	2.0	...	...	...	...	...	...	C65500	B 283
15.3	12.5	12.0	11.2	10.5	7.5	2.0	...	...	...	...	...	...	C37700	B 283
16.0	15.2	15.0	14.1	13.0	8.5	2.0	...	...	...	...	...	...	C48500	B 283
17.3	15.8	15.3	14.2	13.0	9.0	2.0	...	...	...	...	...	...	C46400	B 283
22.7	12.9	12.0	11.2	10.5	7.5	2.0	...	...	...	...	...	...	C67500	B 283
														Castings (2)
9.4	9.4	9.4	9.4	9.1	8.9	8.6	8.5	...	...	...	...	...	C83600	B 62
10.0	...	...	...	...	...	...	...	...	...	...	...	...	C97300	B 584
10.0	7.5	7.3	6.9	6.3	...	...	...	...	...	...	...	...	C97600	B 584
10.6	9.0	9.0	9.0	8.5	8.0	7.0	...	...	...	...	...	...	C92300	B 584
10.6	10.6	10.6	10.6	10.6	10.6	10.3	...	...	...	...	...	...	C92200	B 584
10.6	10.6	10.6	10.6	10.6	10.6	10.3	9.6	9.0	6.3	...	...	...	C92200	B 61
12.0	10.0	9.5	9.3	8.5	8.0	7.0	...	...	...	...	...	...	C90300	B 584
12.0	12.0	12.0	12.0	12.0	11.9	11.0	...	...	...	...	...	...	C90500	B 584
13.3	12.8	12.0	11.3	10.5	7.5	...	...	...	...	...	...	...	C86400	B 584
14.6	10.4	9.4	8.5	7.5	7.0	...	...	...	...	...	...	...	C97800	B 584
16.6	14.8	13.4	12.0	10.5	7.5	...	...	...	...	...	...	...	C86500	B 584
													C95200	B 148
16.3	15.7	15.2	14.7	14.5	14.2	14.2	14.2	14.2	11.7	7.4	...	...	C95300	B 148
18.8	...	...	...	...	...	...	...	...	...	...	...	...	C95600	B 148
20.0	18.8	18.0	17.3	16.3	15.6	14.8	12.9	11.0	...	...	...	...	C95400	B 148
21.3	17.5	15.3	12.9	10.5	7.5	...	...		...	...	...	...	C86700	B 584
26.6	22.5	21.0	19.5	18.0	16.5	15.0	13.5	12.0	...	...	...	...	C95500	B 148
30.0	19.5	17.3	16.5	10.5	7.5	...	...	...	...	...	...	...	C86200	B 584
36.6	23.3	19.0	14.8	10.5	7.5	...	...	...	...	...	...	...	C86300	B 584

Copyright ASME International
Provided by IHS under license with ASME
No reproduction or networking permitted without license from IHS
Not for Resale

(04)

Table A-1 Basic Allowable Stresses in Tension for Metals[1] (Cont'd)

Numbers in Parentheses Refer to Notes for Appendix A Tables; Specifications Are ASTM Unless Otherwise Indicated

Material	Spec. No.	P-No. or S-No. (5)	UNS No.	Class	Size Range, in.	Notes	Min. Temp., °F (6)	Specified Min. Strength, ksi Tensile	Yield	Min. Temp. to 100	200	300	400	500	600	650	700	750
Nickel and Nickel Alloy (4) Pipes and Tubes (2)																		
Low C–Ni	B 161	41																
Low C–Ni	B 725	S41	N02201	Annealed	> 5 O.D.	...	–325	50	10	6.7	6.4	6.3	6.2	6.2	6.2	6.2	6.2	6.1
Ni	B 161	41																
Ni	B 725	S41	N02200	Annealed	> 5 O.D.	...	–325	55	12	8.0	8.0	8.0	8.0	8.0	8.0	...	...	...
Low C–Ni	B 161	41																
Low C–Ni	B 725	S41	N02201	Annealed	≤ 5 O.D.	...	–325	50	12	8.0	7.7	7.5	7.5	7.5	7.5	7.5	7.4	7.3
Ni	B 161	41																
Ni	B 725	S41	N02200	Annealed	≤ 5 O.D.	...	–325	55	15	10.0	10.0	10.0	10.0	10.0	10.0	...	...	...
Ni–Cu	B 165	42																
Ni–Cu	B 725	S42	N04400	Annealed	> 5 O.D.	...	–325	70	25	16.7	14.7	13.7	13.2	13.2	13.2	13.2	13.2	13.0
Ni–Fe–Cr	B 407	45	N08800	H.F. or H.F. ann.	...	(76)	–325	65	25	16.7	*16.7*	*16.7*	*15.8*	*14.9*	*14.6*	*14.4*	*14.3*	*14.2*
Ni–Cr–Fe	B 167	43	N06600	H.F. or H.F. ann.	> 5 O.D.	...	–325	75	25	16.7	*16.7*	*16.7*	*16.7*	*16.7*	*16.7*	*16.7*	*16.7*	*16.7*
Ni–Fe–Cr	B 407	45	N08810	C.D. sol. ann. or H.F. ann.	...	(62)(76)												
Ni–Fe–Cr	B 514	45	N08810	Annealed	...	(62)(76)	–325	65	25	16.7	16.7	16.7	16.7	16.7	16.5	16.0	15.7	15.4
Ni–Fe–Cr	B 407	45	N08811	C.D. sol. ann. or H.F. ann.	...	(62)(76)	–325	65	25	16.7	16.7	16.7	16.7	16.7	16.5	16.0	15.7	15.4
Ni–Cu	B 165	42																
Ni–Cu	B 725	S42	N04400	Annealed	≤ 5 O.D.	...	–325	70	28	18.7	16.4	15.4	14.8	14.8	14.8	14.8	14.8	14.6
Ni–Fe–Cr–Mo	B 619	45	N08320	Sol. ann.	...	(76)												
Ni–Fe–Cr–Mo	B 622	45	N08320	Sol. ann.	...	...	–325	75	28	18.7	*18.7*	*18.6*	*17.9*	*17.6*	*17.5*	*17.5*	*17.5*	*17.4*
Low C–Ni	B 161	41																
Low C–Ni	B 725	S41	N02201	Str. rel.	...	...	–325	60	30	20.0	15.0	15.0	14.8	14.7	14.2	...	...	...
Ni–Fe–Cr	B 514	45	N08800	Annealed	...	(76)	–325	75	30	20.0	*20.0*	*20.0*	*20.0*	*20.0*	*20.0*	*20.0*	*20.0*	*20.0*
Ni–Cr–Fe	B 167	43	N06600	H.F. or H.F. ann.	≤ 5 O.D.													
Ni–Cr–Fe	B 167	43	N06600	C.D. ann.	> 5 O.D.	...	–325	80	30	20.0	*20.0*	*20.0*	*20.0*	*20.0*	*20.0*	*20.0*	*20.0*	*20.0*
Ni–Fe–Cr	B 407	45	N08800	C.D. ann.	...	(61)	–325	75	30	20.0	*20.0*	*20.0*	*20.0*	*20.0*	*20.0*	*20.0*	20.0	20.0
Ni	B 161																	
Ni	B 725	41	N02200	Str. rel.	...	...	–325	65	40	21.6	16.3	16.3	16.3	16.0	15.4	...	...	...
Cr–Ni–Fe–Mo–Cu–Cb	B 464																	
Cr–Ni–Fe–Mo–Cu–Cb	B 729	45	N08020	Annealed	...	(76)	–325	80	35	23.3	*20.0*	*19.8*	*19.4*	*19.3*	*19.3*	19.2	19.2	19.2
Ni-Cr-Fe-Mo-Cu	B 423	45	N08825	C.D. ann.	...	...	–325	85	35	23.3	*23.3*	*23.3*	*23.3*	*23.3*	*23.3*	*23.3*	*23.3*	*23.2*
Ni-Cr-Fe-Mo-Cu	B 705	45	N08825	...	...	...	–325	85	35	23.3	*23.3*	*23.3*	*23.3*	*23.3*	*23.3*	*23.3*	*23.3*	*23.2*
Ni-Cr-Fe-Mo-Cu	B 619	45	N06007	Sol. ann.	...	(76)	–325	90	35	23.3	*23.3*	*23.3*	*23.3*	*23.3*	**22.7**	**22.5**	**22.3**	**22.0**
Ni-Cr-Fe-Mo-Cu	B 622	45	N06007	Sol. ann.	...	...	–325	90	35	23.3	*23.3*	*23.3*	*23.3*	*23.3*	**22.7**	**22.5**	**22.3**	**22.0**
Ni–Cr–Fe	B 167	43	N06600	C.D. ann.	≤ 5 O.D.	...												
Ni–Cr–Fe	B 517	43	N06600	C.D. ann.	...	(76)	–325	80	35	23.3	23.3	*23.3*	*23.3*	*23.3*	*23.3*	*23.3*	*23.3*	*23.3*
Ni–Mo–Cr	B 619	44	N06455	Sol. ann.	...	(76)	–325	100	40	26.7	*24.9*	*24.9*	*24.9*	*24.7*	*24.4*	*24.2*	*24.0*	*23.8*

Abbreviations in Class Column:

ann. annealed; C.D. cold worked; forg. forged; H.F. hot worked; H.R. hot rolled; plt. plate; R. rolled; rel. relieved; sol. solution; str. stress

Copyright ASME International
Provided by IHS under license with ASME
No reproduction or networking permitted without license from IHS
Not for Resale

Table A-1 Basic Allowable Stresses in Tension for Metals[1] (Cont'd) (04)

Numbers in Parentheses Refer to Notes for Appendix A Tables; Specifications Are ASTM Unless Otherwise Indicated

Basic Allowable Stress *S*, ksi (1), at Metal Temperature, °F (7)																		UNS	Spec.
800	850	900	950	1000	1050	1100	1150	1200	1250	1300	1350	1400	1450	1500	1550	1600	1650	No.	No.
																			Nickel and Nickel Alloy (4) Pipes and Tubes (2)
5.9	5.8	4.5	3.7	3.0	2.4	2.0	1.5	1.2	...	...	...	...	...	...	...	...	...	N02201	B 161 B 725
...	...	...	...	...	...	...	...	...	...	...	...	...	...	...	...	...	...	N02200	B 161 B 725
7.2	5.8	4.5	3.7	3.0	2.4	2.0	1.5	1.2	...	...	...	...	...	...	...	...	...	N02201	B 161 B 725
...	...	...	...	...	...	...	...	...	...	...	...	...	...	...	...	...	...	N02200	B 161 B 725
12.7	11.8	8.0	...	...	...	...	...	...	...	...	...	...	...	...	...	...	...	N04400	B 165 B 725
14.0	*13.2*	*13.1*	*12.9*	*12.8*	*12.7*	*12.7*	10.0	7.0	6.0	4.6	3.6	2.8	2.1	1.7	...	...	...	N08800	B 407
16.7	*16.5*	*15.9*	*15.9*	7.0	4.5	3.0	2.2	2.0	...	...	...	...	...	...	...	...	...	N06600	B 167
15.3	*15.1*	*14.8*	*14.6*	*14.4*	*13.7*	*11.6*	9.3	7.4	5.9	4.7	3.8	3.0	2.4	1.9	1.5	1.2	1.0	N08810	B 407 B 514
15.3	*15.1*	*14.8*	*14.6*	*14.4*	*13.7*	12.9	10.4	8.3	6.7	5.4	4.3	3.4	2.7	2.2	1.7	1.4	1.1	N08811	B 407
14.2	11.0	8.0	...	...	...	...	...	...	...	...	...	...	...	...	...	...	...	N04400	B 165 B 725
17.2	...	...	...	...	...	...	...	...	...	...	...	...	...	...	...	...	...	N08320	B 619 B 622
...	...	...	...	...	...	...	...	...	...	...	...	...	...	...	...	...	...	N02201	B 161 B 725
20.0	18.3	18.2	17.9	17.6	17.0	13.0	9.8	6.6	4.6	2.0	1.6	1.1	1.0	0.6	...	...	...	N08800	B 514
20.0	*19.6*	*16.0*	10.6	7.0	4.5	3.0	2.2	2.0	...	...	...	...	...	...	...	...	...	N06600	B 167 B 167
20.0	*18.3*	*18.2*	*17.9*	*17.6*	*17.0*	13.0	9.8	6.6	4.2	2.0	1.6	1.1	1.0	0.8	...	...	...	N08800	B 407
...	...	...	...	...	...	...	...	...	...	...	...	...	...	...	...	...	...	N02200	B 161 B 725
19.1	...	...	...	...	...	...	...	...	...	...	...	...	...	...	...	...	...	N08020	B 464 B 729
23.0	22.9	22.8	22.6	22.3	...	...	...	...	...	...	...	...	...	...	...	...	...	N08825	B 423
23.0	22.9	22.8	22.6	22.3	...	...	...	...	...	...	...	...	...	...	...	...	...	N08825	B 705
21.8	*20.2*	*20.0*	*19.5*	*18.9*	...	...	...	...	...	..	...	...	...	...	...	...	...	N06007	B 619
21.8	...	...	...	...	...	...	...	...	...	...	...	...	...	...	...	...	...	N06007	B 622
23.3	*20.0*	16.0	10.6	7.0	4.5	3.0	2.2	2.0	...	...	...	...	...	...	...	...	...	N06600	B 167 B 517
22.9	...	...	...	...	..	...	...	...	...	...	...	...	...	...	...	...	...	N06455	B 619

--`,,```,,,,````-`-`,,`,,`,`,,`---

Copyright ASME International
Provided by IHS under license with ASME
No reproduction or networking permitted without license from IHS

Not for Resale

(04)

Table A-1 Basic Allowable Stresses in Tension for Metals[1] (Cont'd)

Numbers in Parentheses Refer to Notes for Appendix A Tables; Specifications Are ASTM Unless Otherwise Indicated

Material	Spec. No.	P-No. or S-No. (5)	UNS No.	Class	Size Range, in.	Notes	Min. Temp., °F (6)	Specified Min. Strength, ksi Tensile	Yield	Min. Temp. to 100	200	300	400	500	600	650	700
Nickel and Nickel Alloy (4) (Cont'd)																	
Pipes and Tubes (2) (Cont'd)																	
Ni–Cr–Mo–Fe	B 619	43	N06002	Sol. ann.	...	(76)											
Ni–Cr–Mo–Fe	B 622	43	N06002	Sol. ann.	...	...	−325	100	40	26.7	*23.3*	*23.3*	*22.9*	*22.2*	*21.1*	*20.7*	*20.3*
Low C-Ni-Fe-Cr-Mo-Cu	B 619	45	N08031	Annealed	...	(76)											
Low C-Ni-Fe-Cr-Mo-Cu	B 622	45	N08031	Annealed	...	...	−325	94	40	26.7	*26.7*	**26.6**	**24.8**	**23.2**	**22.1**	**21.8**	**21.2**
Ni–Mo–Cr	B 622	44	N06455	Sol. ann.	...	...	−325	100	40	26.8	*26.7*	*26.7*	*26.7*	*26.7*	*26.7*	*26.7*	**26.5**
Ni–Mo–Cr	B 619	44	N10276	Sol. ann.	...	(76)											
Ni–Mo–Cr	B 622	44	N10276	Sol. ann.	...	...	−325	100	41	27.3	*27.3*	*27.3*	*27.3*	**26.9**	**25.4**	**24.7**	**24.0**
Ni–Cu	B 165	42															
Ni–Cu	B 725	S42	N04400	Str. rel.	...	(54)	−325	85	55	28.3	21.2	21.2	21.0	21.0	...	...	...
Fe–Ni–Cr–Mo–Cu–N	B 675	45	N08367	Annealed	> 3/16	(76)											
Fe–Ni–Cr–Mo–Cu–N	B 690	45	N08367	Annealed	> 3/16	(76)											
Fe–Ni–Cr–Mo–Cu–N	B 804	45	N08367	Annealed	> 3/16	...	−325	95	45	30.0	*30.0*	*29.9*	*28.6*	**27.7**	**26.2**	**25.6**	**25.1**
Fe–Ni–Cr–Mo–Cu–N	B 675	45	N08367	Annealed	≤ 3/16	(76)											
Fe–Ni–Cr–Mo–Cu–N	B 690	45	N08367	Annealed	≤ 3/16	(76)											
Fe–Ni–Cr–Mo–Cu–N	B 804	45	N08367	Annealed	≤ 3/16	...	−325	100	45	30.0	*30.0*	*30.0*	**29.6**	**27.7**	**26.2**	**25.6**	**25.1**
Ni–Cr–Mo	B 619	44	N06022	Sol. ann.	...	(76)											
Ni–Cr–Mo	B 622	44	N06022	Sol. ann.	...	...	−325	100	45	30.0	*30.0*	*30.0*	*30.0*	**28.6**	**27.1**	**26.5**	**25.9**
Low C–Ni–Cr–Mo	B 619	44	N06059	Sol. ann.	...	(76)											
Low C–Ni–Cr–Mo	B 622	44	N06059	Sol. ann.	...	...	−325	100	45	30.0	*30.0*	*30.0*	*30.0*	**29.6**	**28.1**	**27.5**	**26.7**
Ni–Mo	B 619																
Ni–Mo	B 622	44	N10001	Sol. ann.	...	...	−325	100	45	30.0	*30.0*	*30.0*	*30.0*	*30.0*	*30.0*	*30.0*	*30.0*
Ni–Mo	B 619	44	N10665	Sol. ann.	...	(76)											
Ni–Mo	B 622	44	N10665	Sol. ann.	...	...	−325	110	51	34.0	*34.0*	*34.0*	*34.0*	*34.0*	*34.0*	*34.0*	*34.0*
Ni–Cr–Mo–Cb	B 444	43	N06625	Annealed	...	(64)(70)	−325	120	60	40.0	*40.0*	*40.0*	*40.0*	*38.9*	*38.0*	*37.7*	*37.4*
Plates and Sheets																	
Low C–Ni	B 162	41	N02201	H.R. plt. ann.													
Low C–Ni	B 162	41	N02201	H.R. plt as R.	...	...	−325	50	12	8.0	7.7	7.5	7.5	7.5	7.5	7.5	7.4
Ni	B 162	41	N02200	H.R. plt. ann.	...	...	−325	55	15	10.0	10.0	10.0	10.0	10.0	10.0	...	...
Ni	B 162	41	N02200	H.R. plt. as R.	...	...	−325	55	20	13.3	13.3	13.3	13.3	12.5	11.5	...	..
Ni–Fe–Cr	B 409	45	N08810	Annealed	All	...	−325	65	25	16.7	16.7	16.7	16.7	16.7	16.7	16.0	15.7
Ni–Fe–Cr	B 409	45	N08811	Annealed	All	...	−325	65	25	16.7	16.7	16.7	16.7	16.7	16.7	16.0	15.7
Ni–Fe–Cr–Mo	B 620	45	N08320	Sol. ann.	All	...	−325	75	28	18.7	*18.7*	*18.6*	*17.9*	*17.6*	*17.5*	*17.5*	*17.5*
Ni–Cu	B 127	42	N04400	H.R. plt. ann.	...	...	−325	70	28	18.7	16.4	*15.4*	14.8	14.8	14.8	14.8	14.8
Ni–Cr–Fe–Mo–Cu	B 582	45	N06007	Sol. ann.	> 3/4	...	−325	85	30	20.0	*20.0*	*20.0*	*20.0*	*20.0*	**19.4**	**19.2**	**19.0**
Ni–Fe–Cr	B 409	45	N08800	Annealed	All	...	−325	75	30	20.0	*20.0*	*20.0*	*20.0*	*20.0*	*20.0*	*20.0*	*20.0*
Ni–Cr–Fe–Mo–Cu	B 424	45	N08825	Annealed	...	...	−325	85	35	23.3	*23.3*	*23.3*	*23.3*	*23.3*	*23.3*	*23.3*	*23.3*
Cr–Ni–Fe–Mo–Cu–Cb	B 463	45	N08020	Annealed	All	...	−325	80	35	23.3	*20.0*	*19.8*	*19.4*	*19.3*	*19.3*	*19.2*	*19.2*
Ni–Cr–Fe–Mo–Cu	B 582	45	N06007	Sol. ann.	≤ 3/4	...	−325	90	35	23.3	*23.3*	*23.3*	*23.3*	*23.3*	*22.7*	*22.5*	*22.3*
Ni–Cr–Fe–Mo	B 435	43	N06002	H.R sol. ann.	All	...	−325	95	35	23.3	21.1	18.9	16.6	16.0	15.5	15.5	15.5
Ni–Cr–Fe	B 168	43	N06600	H.R. plt. ann.	...	...	−325	80	35	23.3	*23.3*	*23.2*	*23.2*	*23.2*	*23.2*	*23.2*	*23.2*

Copyright ASME International
Provided by IHS under license with ASME
No reproduction or networking permitted without license from IHS
Not for Resale

Table A-1 Basic Allowable Stresses in Tension for Metals[1] (Cont'd) (04)

Numbers in Parentheses Refer to Notes for Appendix A Tables; Specifications Are ASTM Unless Otherwise Indicated

Basic Allowable Stress *S*, ksi (1), at Metal Temperature, °F (7)																				
750	800	850	900	950	1000	1050	1100	1150	1200	1250	1300	1350	1400	1450	1500	1550	1600	1650	UNS No.	Spec. No.
																				Nickel and Nickel Alloy (4) (Cont'd) Pipes and Tubes (2) (Cont'd)
20.1	*19.8*	*19.7*	*19.6*	*19.5*	*19.3*	*19.3*	*17.5*	14.1	11.3	9.3	7.7	6.1	4.8	3.8	3.0	...	...	...	N06002	B 619 B 622
20.9	**20.5**	...	...	...	...	...	...	...	...	...	...	...	...	...	...	...	...	...	N08031	B 619 B 622
26.1	**25.8**	..	..	..	..	..	..	...	...	...	...	...	...	...	...	...	...	...	N06455	B 622
23.5	**23.0**	*22.6*	*22.3*	*22.1*	*21.8*	*18.5*	*15.0*	*12.2*	*9.8*	*7.8*	...	...	...	...	...	...	...	...	N10276	B 619 B 622
...	...	...	...	...	...	...	...	...	...	...	...	...	...	...	...	...	...	...	N04400	B 165 B 725
24.7	**24.3**	**23.9**	**23.6**	...	...	...	...	...	...	...	...	...	...	...	...	...	...	...	N08367	B 675 B 690 B 804
24.7	**24.3**	**23.9**	**23.6**	...	...	...	...	...	...	...	...	...	...	...	...	...	...	...	N08367	B 675 B 690 B 804
25.5	**25.1**	...	...	...	...	...	...	...	...	...	...	...	...	...	...	...	...	...	N06022	B 619 B 622
26.1	**25.6**	...	...	...	...	...	...	...	...	...	...	...	...	...	...	...	...	...	N06059	B 619 B 622
30.0	**29.8**	...	...	...	...	...	...	...	...	...	...	...	...	...	...	...	...	...	N10001	B 619 B 622
34.0	*34.0*	...	...	...	...	...	...	...	...	...	...	...	...	...	...	...	...	...	N10665	B 619 B 622
37.4	*37.4*	*37.4*	*37.4*	*37.4*	*37.4*	*37.4*	27.7	21.0	13.2	...	...	...	...	...	...	...	...	...	N06625	B 444
																				Plates and Sheets
7.3	7.2	5.8	4.5	3.7	3.0	2.4	2.0	1.5	1.2	...	...	...	...	...	...	...	...	...	N02201	B 162 B 162
...	...	...	...	...	...	...	...	...	...	...	...	...	...	...	...	...	...	...	N02200	B 162
...	...	...	...	...	...	...	...	...	...	...	...	...	...	...	...	...	...	...	N02200	B 162
15.4	15.3	15.1	14.8	14.6	14.4	13.7	11.6	9.3	7.4	5.9	4.7	3.8	3.0	2.4	1.9	1.5	1.2	1.0	N08810	B 409
15.4	15.3	15.1	14.8	14.6	14.4	13.7	12.9	10.4	8.3	6.7	5.4	4.3	3.4	2.7	2.2	1.7	1.4	1.1	N08811	B 409
17.4	**17.2**	...	...	...	...	...	...	...	...	...	...	...	...	...	...	...	...	...	N08320	B 620
14.6	14.2	11.0	8.0	...	...	...	...	...	...	...	...	...	...	...	...	...	...	...	N04400	B 127
18.8	**18.6**	*18.5*	*18.4*	*18.3*	*18.3*	...	...	...	...	...	...	...	...	...	...	...	...	...	N06007	B 582
20.0	*20.0*	18.3	18.2	17.9	17.6	17.0	13.0	9.8	6.6	4.2	2.0	1.6	1.1	1.0	0.8	...	...	...	N08800	B 409
23.2	*23.0*	22.9	22.8	22.6	22.3	...	...	...	...	...	...	...	...	...	...	...	...	...	N08825	B 424
19.2	19.1	...	...	...	...	...	...	...	...	...	...	...	...	...	...	...	...	...	N08020	B 463
22.0	*21.8*	*20.3*	*20.0*	*19.5*	*19.0*	...	...	...	...	...	...	...	...	...	...	...	...	...	N06007	B 582
15.5	15.5	...	...	...	...	...	...	...	...	...	...	...	...	...	...	...	...	...	N06002	B 435
23.3	*23.3*	*20.0*	16.0	10.6	7.0	4.5	3.0	2.2	2.0	...	...	...	...	...	...	...	...	...	N06600	B 168

Copyright ASME International
Provided by IHS under license with ASME
No reproduction or networking permitted without license from IHS
Not for Resale

(04)

Table A-1 Basic Allowable Stresses in Tension for Metals[1] (Cont'd)

Numbers in Parentheses Refer to Notes for Appendix A Tables; Specifications Are ASTM Unless Otherwise Indicated

Material	Spec. No.	P-No. or S-No. (5)	UNS No. or Grade	Class	Size Range, in.	Notes	Min. Temp., °F (6)	Specified Min. Strength, ksi Tensile	Yield	Min. Temp. to 100	200	300	400	500	600	650	700
Nickel and Nickel Alloy (4) (Cont'd) Plates and Sheets (2) (Cont'd)																	
Ni–Cr–Fe	B 168	43	N06600	H.R. plt. as R.	...	...	–325	85	35	23.3	*21.2*	*21.2*	*21.2*	*21.2*	*21.2*	*21.2*	*21.2*
Ni–Cu	B 127	42	N04400	H.R. plt. as R.	...	...	–325	75	40	25.0	23.5	21.9	21.2	21.2	21.2	21.2	21.2
Low C–Ni–Fe–Cr–Mo–Cu	B 625	...	N08031	Annealed	All	...	–325	94	40	26.7	*26.7*	**26.6**	**24.8**	**23.2**	**22.1**	**21.8**	**21.2**
Low C–Ni–Mo–Cr	B 575	44	N06455	Sol. ann.	All	...	–325	100	40	26.7	*26.7*	*26.7*	*26.7*	*26.7*	*26.7*	*26.7*	**26.5**
Low C–Ni–Mo–Cr	B 575	44	N10276	Sol. ann.	All	...	–325	100	41	27.3	*27.3*	*27.3*	*27.3*	**26.9**	**25.4**	**24.7**	**24.0**
Ni–Cr–Mo–Cb	B 443	43	N06625	Annealed plt.	All	(64)(70)	–325	110	55	36.7	36.7	36.7	36.7	35.6	34.8	34.6	34.3
Ni–Cr–Mo–Cb	B 575	44	N06022	Sol. ann. sheet	< 3/16	...	–325	100	45	30.0	*30.0*	*30.0*	*30.0*	**28.6**	**27.1**	**26.5**	**25.9**
Fe–Ni–Cr–Mo–Cu–N	B 688	45	N08367	Annealed	> 3/16	...	–325	95	45	30.0	*30.0*	*29.9*	28.6	**27.7**	**26.2**	**25.6**	**25.1**
Fe–Ni–Cr–Mo–Cu–N	B 688	45	N08367	Annealed	≤ 3/16	...	–325	100	45	30.0	*30.0*	*30.0*	**29.6**	**27.7**	**26.2**	**25.6**	**25.1**
Low C–Ni–Cr–Mo	B 575	...	N06059	Sol. ann.	All	...	–325	100	45	30.0	*30.0*	*30.0*	*30.0*	*29.6*	28.1	27.5	**26.7**
Ni–Mo	B 333	44	N10001	Sol. ann. plt.	≥ 3/16, ≤ 2 1/2	...	–325	100	45	30.0	*30.0*	*30.0*	*30.0*	*30.0*	*30.0*	*30.0*	*30.0*
Ni–Fe–Cr–Mo	B 688	45	N08367	Annealed	< 3/16	...	–325	104	46	30.7	*30.7*	**30.7**	**30.6**	**28.2**	**26.9**	**26.1**	**25.7**
Ni–Mo	B 333	44	N10001	Sol. ann. sheet	< 3/16	...	–325	115	50	33.3	*33.3*	*33.3*	*33.3*	*33.3*	*33.3*	*33.3*	*33.3*
Ni–Mo	B 333	44	N10665	Sol. ann.	All	...	–325	110	51	34.0	*34.0*	*34.0*	*34.0*	*34.0*	*34.0*	*34.0*	34.0
Forgings and Fittings (2)																	
Low C–Ni	B 160	41	N02201	Annealed	All	(9)(9a)											
Low C–Ni	B 366	41	N02201	...	...	(32)(74)	–325	50	10	6.7	6.4	6.3	6.2	6.2	6.2	6.2	6.2
Ni	B 366	S-41															
Ni	B 564	S-41	N02200	...	...	(32)(74)	–325	55	12	8.0	8.0	8.0	8.0	8.0	8.0	...	...
Ni	B 564	S-41	N02200	Annealed	All	(9)	–325	55	15	10.0	10.0	10.0	10.0	10.0	10.0	...	...
Ni–Fe–Cr	B 564	45	N08810														
Ni–Fe–Cr	B 564	S-45	N08811	Annealed	...	(9)	–325	65	25	16.2	16.2	16.2	16.2	16.0	16.0	16.0	15.7
Ni–Cu	B 564	42	N04400	Annealed	...	(9)											
Ni–Cu	B 366	42	N04400	...	...	(32)(74)	–325	70	25	16.7	14.7	13.7	13.2	13.2	13.2	13.2	13.2
Ni–Cr–Fe	B 366	S-43	N06600	...	...	(32)(74)	–325	75	25	16.7	*16.7*	*16.7*	*16.7*	*16.7*	*16.7*	*16.7*	*16.7*
Ni–Fe–Cr	B 366	45	N08800	Annealed	...	...											
Ni–Fe–Cr	B 564	45	N08800	Annealed	...	(9)	–325	75	30	20.0	*20.0*	*20.0*	*20.0*	*20.0*	*20.0*	*20.0*	*20.0*
Cr–Ni–Fe–Mo–Cu–Cb	B 366	45	N08020	Annealed	...	...											
Cr–Ni–Fe–Mo–Cu–Cb	B 462	45	N08020	Annealed	...	(9)	–325	80	35	23.3	*20.0*	*19.8*	*19.4*	19.3	*19.3*	*19.2*	19.2

Copyright ASME International
Provided by IHS under license with ASME
No reproduction or networking permitted without license from IHS
Not for Resale

Table A-1 Basic Allowable Stresses in Tension for Metals[1] (Cont'd)

Numbers in Parentheses Refer to Notes for Appendix A Tables; Specifications Are ASTM Unless Otherwise Indicated

Basic Allowable Stress *S*, ksi (1), at Metal Temperature, °F (7)																			UNS No.	Spec.
750	800	850	900	950	1000	1050	1100	1150	1200	1250	1300	1350	1400	1450	1500	1550	1600	1650	or Grade	No.
																				Nickel and Nickel Alloy (4) (Cont'd) Plates and Sheets (2) (Cont'd)
21.2	*21.2*	*21.2*	*21.2*	*21.2*	14.5	10.3	7.2	5.8	5.5	...	...	...	...	...	...	...	...	...	N06600	B 168
20.9	20.3	8.2	4.0	...	...	...	...	...	...	...	...	...	...	...	...	...	...	...	N04400	B 127
20.9	**20.5**	...	...	...	...	...	...	...	...	...	...	...	...	...	...	...	...	...	N08031	B 625
26.1	**25.8**	...	...	...	...	...	...	...	...	...	...	...	...	...	...	...	...	...	N06455	B 575
23.5	**23.0**	*22.6*	*22.3*	*22.1*	*21.1*	*18.5*	*15.0*	*12.2*	*9.8*	*7.8*	...	...	...	...	...	...	...	...	N10276	B 575
34.3	34.3	34.3	34.3	34.3	34.3	34.3	25.4	21.0	13.2	...	...	...	...	...	...	...	...	...	N06625	B 443
25.5	**25.1**	...	...	...	...	...	...	...	...	...	...	...	...	...	...	...	...	...	N06022	B 575
24.7	**24.3**	**23.9**	**23.6**	...	...	...	...	...	...	...	...	...	...	...	...	...	...	...	N08367	B 688
24.7	**24.3**	**23.9**	**23.6**	...	...	...	...	...	...	...	...	...	...	...	...	...	...	...	N08367	B 688
26.1	**25.6**	...	...	...	...	...	...	...	...	...	...	...	...	...	...	...	...	...	N06059	B 575
30.0	**29.8**	...	...	...	...	...	...	...	...	...	...	...	...	...	...	...	...	...	N10001	B 333
25.3	**24.8**	...	...	...	...	...	...	...	...	...	...	...	...	...	...	...	...	...	N08367	B 688
33.3	**33.1**	...	...	...	...	...	...	...	...	...	...	...	...	...	...	...	...	...	N10001	B 333
34.0	34.0	...	...	...	...	...	...	...	...	...	...	...	...	...	...	...	...	...	N10665	B 333
																				Forgings and Fittings (2)
																			N02201	B 160
6.1	5.9	5.8	4.8	3.7	3.0	2.4	2.0	1.5	1.2	...	...	...	...	...	...	...	...	...	N02201	B 366
																			N02200	B 366
...	...	...	...	...	...	...	...	...	...	...	...	...	...	...	...	...	...	...	N02200	B 564
...	...	...	...	...	...	...	...	...	...	...	...	...	...	...	...	...	...	...	N02200	B 564
																			N08810	B 564
15.4	15.3	15.1	14.8	14.6	14.4	13.7	11.6	9.3	7.4	5.9	4.7	3.8	3.0	2.4	1.9	1.5	1.2	1.0	N08811	B 564
																				B 564
13.0	12.7	11.0	8.0	...	...	...	...	...	...	...	...	...	...	...	...	...	...	...	N04400	B 366
16.7	*16.7*	*16.5*	*15.9*	10.6	7.0	4.5	3.0	2.2	2.0	...	...	...	...	...	...	...	...	...	N06600	B 366
																				B 366
20.0	*20.0*	18.3	18.2	17.9	17.6	17.0	13.0	9.8	6.6	4.2	2.0	1.6	1.1	1.0	0.8	...	...	...	N08800	B 564
																			N08020	B 366
19.2	19.1	...	...	...	...	...	...	...	...	...	...	...	...	...	...	...	...	...	N08020	B 462

Copyright ASME International
Provided by IHS under license with ASME
No reproduction or networking permitted without license from IHS
Not for Resale

(04)

Table A-1 Basic Allowable Stresses in Tension for Metals[1] (Cont'd)

Numbers in Parentheses Refer to Notes for Appendix A Tables; Specifications Are ASTM Unless Otherwise Indicated

Material	Spec. No.	P-No. or S-No. (5)	UNS No. or Grade	Class	Size Range, in.	Notes	Min. Temp., °F (6)	Specified Min. Strength, ksi Tensile	Yield	Min. Temp. to 100	200	300	400	500	600	650	700
Nickel and Nickel Alloy (4) (Cont'd)																	
Forgings and Fittings (2) (Cont'd)																	
Ni–Cr–Fe	B 564	43	N06600	Annealed	All	(9)	–325	80	35	23.3	*23.3*	*23.3*	*23.3*	*23.3*	*23.3*	*23.3*	*23.3*
Cr–Ni–Fe–Mo–Cu	B 366	45	N08825	Annealed	...	...	–325	85	35	23.3	*23.3*	*23.3*	*23.3*	*23.3*	*23.3*	*23.3*	*23.3*
Cr–Ni–Fe–Mo–Cu	B 564	45	N08825	Annealed	...	...	–325	85	35	23.3	*23.3*	*23.3*	*23.3*	*23.3*	*23.3*	*23.3*	*23.3*
Ni–Cr–Mo–Fe	B 366	S-43	N06002	...	...	(32)(74)	–325	100	40	26.7	*23.3*	*23.3*	*22.9*	*22.3*	*21.1*	*20.7*	*20.3*
Low C–Ni–Fe–Cr–Mo–Cu	B 366	S-45	N08031	Annealed H.W.	All	...	–325	94	40	26.7	*26.7*	**26.6**	**24.8**	**23.2**	**22.1**	**21.8**	**21.2**
Low C–Ni–Fe–Cr–Mo–Cu	B 564	S-45	N08031	Annealed H.W.	All	...	–325	94	40	26.7	*26.7*	**26.6**	**24.8**	**23.2**	**22.1**	**21.8**	**21.2**
Ni–Mo–Cr	B 366	44	N10276	Sol. ann.	All	...	–325	100	41	27.3	*27.3*	*27.3*	*27.3*	26.9	25.4	24.7	24.0
Ni–Mo–Cr	B 564	44	N10276	Sol. ann.	All	(9)	–325	100	41	27.3	*27.3*	*27.3*	*27.3*	26.9	25.4	24.7	24.0
Ni–Mo	B 366	44	N10001	...	...	(32)(74)	–325	100	45	30.0	*25.0*	*25.0*	*24.7*	*24.3*	*24.2*	*24.1*	*24.0*
Ni–Mo–Cr	B 366	44	N06022	...	...	(32)(74)	–325	100	45	30.0	*30.0*	*30.0*	*30.0*	**28.6**	**27.1**	**26.5**	**25.9**
Ni–Cr–Mo	B 564	44	N06022	...	...	...	–325	100	45	30.0	*30.0*	*30.0*	*30.0*	**28.6**	**27.1**	**26.5**	**25.9**
Low C–Ni–Cr–Mo	B 366	S-44	N06059	H.W. sol. ann.	All	...	–325	100	45	30.0	*30.0*	*30.0*	*30.0*	**29.6**	**28.1**	**27.5**	**26.7**
Low C–Ni–Cr–Mo	B 564	S-44	N06059	H.W. sol. ann.	All	...	–325	100	45	30.0	*30.0*	*30.0*	*30.0*	**29.6**	**28.1**	**27.5**	**26.7**
Ni–Cr–Mo–Cb	B 564	43	N06625	Annealed	≤ 4	(9)(64)	–325	120	60	40.0	*40.0*	*40.0*	*40.0*	**38.3**	**38.0**	**37.7**	37.4
Ni–Mo	B 366	44	N10665	Sol. ann.	All	...	–325	110	51	34.0	*34.0*	*34.0*	*34.0*	*34.0*	*34.0*	*34.0*	*34.0*
Rod and Bar																	
Ni	B 160	41	N02200	H.W.	All	(9)	–325	60	15	10.0	10.0	10.0	10.0	*9.5*	8.3	...	...
Ni	B 160	41	N02200	Annealed	All	(9)	–325	55	15	10.0	10.0	10.0	10.0	10.0	10.0	...	...
Ni–Cu	B 164	42	N04400	Ann. forg.	All	(13)	–325	70	25	16.7	14.7	13.7	13.2	13.2	13.2	13.2	13.2
Ni–Fe–Cr–Mo	B 621	45	N08320	Sol. ann.	All	...	–325	75	28	18.7	*18.7*	*18.6*	*17.9*	*17.6*	*17.5*	*17.5*	*17.5*
Ni–Cr–Fe–Mo–Cu	B 581	45	N06007	Sol. ann.	> 3/4	...	–325	85	30	20.0	*20.0*	*20.0*	*20.0*	*20.0*	**19.4**	**19.2**	**19.0**
Ni–Fe–Cr–Mo–Cu	B 425	45	N08825	Annealed	...	...	–325	85	35	23.3	*23.3*	*23.3*	*23.3*	*23.3*	*23.3*	*23.3*	*23.3*
Ni–Cr–Fe–Mo–Cu	B 581	45	N06007	Sol. ann.	≤ 3/4	...	–325	90	35	23.3	*22.3*	*22.3*	*22.3*	*22.3*	**22.7**	**22.5**	*22.3*
Low C–Ni–Fe–Cr–Mo–Cu	B 649	S-45	N08031	Annealed	All	...	–325	94	40	26.7	*26.7*	*26.6*	*24.8*	**23.2**	**22.1**	**21.8**	**21.2**
Ni–Cu	B 164	42	N04400	H.W.	All except hex. > 2 1/8	...	–325	80	40	26.6	20.0	20.0	20.0	20.0	20.0	20.0	19.2
Ni–Mo–Cr	B 574	44	N06455	Sol. ann.	All	(9)	–325	100	40	26.7	*26.7*	*26.7*	*26.7*	*26.7*	*26.7*	*26.7*	*26.5*
Ni–Cr–Mo–Cb	B 446	43	N06625	Annealed	> 4 to 10	(9)(64) (70)	–325	110	50	33.3	*33.3*	*33.3*	*33.3*	32.4	31.7	31.4	31.2
					≤ 4	(9)(64) (70)	–325	120	60	40.0	*40.0*	*40.0*	*40.0*	**38.3**	**38.0**	37.7	37.4
Low C–Ni–Cr–Mo	B 574	S-44	N06059	Sol. ann.	All	...	–325	100	45	30.0	*30.0*	*30.0*	*30.0*	**29.6**	**28.1**	**27.5**	**26.7**
Castings (2)																	
Ni–Mo–Cr	A 494	...	CW-12MW	...	...	(9)(46)	–325	72	40	24.0	17.1	16.2	16.2	16.2	16.2	16.1	16.1
Ni–Mo–Cr	A 494	S-44	CW-6M	...	...	(9)	–325	72	40	24.0	17.1	16.2	16.2	16.2	16.2	16.1	16.1
Ni–Cr–Mo	A 494	S-44	CX-2MW	Sol. ann.	...	(9)	–325	80	45	26.7	25.9	25.3	24.9	23.6	...	...	...

Copyright ASME International
Provided by IHS under license with ASME
No reproduction or networking permitted without license from IHS
Not for Resale

Table A-1 Basic Allowable Stresses in Tension for Metals[1] (Cont'd) (04)

Numbers in Parentheses Refer to Notes for Appendix A Tables; Specifications Are ASTM Unless Otherwise Indicated

Basic Allowable Stress *S*, ksi (1), at Metal Temperature, °F (7)																			UNS No.	Spec.
750	800	850	900	950	1000	1050	1100	1150	1200	1250	1300	1350	1400	1450	1500	1550	1600	1650	or Grade	No.
																			Nickel and Nickel Alloy (4) (Cont'd) Forgings and Fittings (2) (Cont'd)	
23.3	*23.3*	20.0	16.0	10.6	7.0	4.5	3.0	2.2	2.0	...	...	...	...	...	...	...	...	...	N06600	B 564
23.2	*23.0*	22.9	22.8	22.6	22.3	...	...	...	...	...	...	...	...	...	...	...	...	...	N08825	B 366
23.2	*23.0*	22.9	22.8	22.6	22.3	...	...	...	...	...	...	...	...	...	...	...	...	...	N08825	B 564
20.1	*19.8*	*19.7*	*19.6*	*19.5*	*19.3*	*18.4*	*17.5*	14.1	11.3	9.5	7.7	6.1	4.3	3.8	3.0	...	...	...	N06002	B 366
20.9	**20.5**	...	...	...	...	...	...	...	...	...	...	...	...	...	...	...	...	...	N08031	B 366 B 564
23.5	23.0	22.6	*22.3*	*22.1*	*21.8*	*18.5*	*15.0*	*12.2*	*9.8*	*7.8*	...	...	...	...	...	...	...	...	N10276	B 366 B 564
23.9	*23.8*	...	...	...	...	...	...	...	...	...	...	...	...	...	...	...	...	...	N10001	B 366
25.5	**25.1**	...	...	...	...	...	...	...	...	...	...	...	...	...	...	...	...	...	N06022	B 366 B 564
26.1	**25.6**	...	...	...	...	...	...	...	...	...	...	...	...	...	...	...	...	...	N06059	B 366 B 564
37.4	37.4	37.4	37.4	37.4	37.4	37.4	23.4	21.0	13.2	...	...	...	...	...	...	...	...	...	N06625	B 564
34.0	*34.0*	...	...	...	...	...	...	...	...	...	...	...	...	...	...	...	...	...	N10665	B 366
																			Rod and Bar	
...	...	...	...	...	...	...	...	...	...	...	...	...	...	...	...	...	...	...	N02200	B 160
...	...	...	...	...	...	...	...	...	...	...	...	...	...	...	...	...	...	...	N02200	B 160
13.0	12.7	11.0	8.0	...	...	...	...	...	...	...	...	...	...	...	...	...	...	...	N04400	B 164
17.4	*17.2*	...	...	...	...	...	...	...	...	...	...	...	...	...	...	...	...	...	N08320	B 621
18.8	**18.6**	18.5	18.4	18.3	18.3	...	...	...	...	...	...	...	...	...	...	...	...	...	N06007	B 581
23.2	*23.0*	22.9	22.8	22.6	22.3	...	...	...	...	...	...	...	...	...	...	...	...	...	N08825	B 425
22.0	*21.8*	*20.3*	*20.0*	*19.5*	*19.0*	...	...	...	...	...	...	...	...	...	...	...	...	...	N06007	B 581
20.9	**20.5**	...	...	...	...	...	...	...	...	...	...	...	...	...	...	...	...	...	N08031	B 649
18.5	14.5	8.5	4.0	...	...	...	...	...	...	...	...	...	...	...	...	...	...	...	N04400	B 164
26.1	*25.8*	...	...	...	...	...	...	...	...	...	...	...	...	...	...	...	...	...	N06455	B 574
31.2	31.2	31.2	31.2	31.2	31.2	31.2	23.1	23.1	21.0	13.2	...	...	...	...	...	...	...	...	N06625	B 446
37.4	37.4	37.4	37.4	37.4	37.4	37.4	37.4	27.7	21.0	13.2	...	...	...	...	...	...	...	...		
26.1	**25.6**	...	...	...	...	...	...	...	...	...	...	...	...	...	...	...	...	...	N06059	B 574
																			Castings (2)	
15.7	15.2	14.8	14.4	14.1	13.8	...	...	...	...	...	...	...	...	...	...	...	...	...	CW-12MW CW-6M	A 494 A 494
...	...	...	...	...	...	...	...	...	...	...	...	...	...	...	...	...	...	...	CX-2MW	A 494

Copyright ASME International
Provided by IHS under license with ASME
No reproduction or networking permitted without license from IHS
Not for Resale

Table A-1 Basic Allowable Stresses in Tension for Metals[1] (Cont'd)

Numbers in Parentheses Refer to Notes for Appendix A Tables; Specifications Are ASTM Unless Otherwise Indicated

Material	Spec. No.	P-No. or S-No. (5)	Grade	Notes	Min. Temp., °F (6)	Specified Min. Strength, ksi		Basic Allowable Stress *S*, ksi (1) at Metal Temperature, °F (7)		
						Tensile	Yield	Min. Temp. to 100	150	200
Titanium and Titanium Alloy Pipes and Tubes (2)										
Ti	B 337	51	1	(17)	−75	35	25	11.7	10.8	9.7
Ti	B 337	51	2	(17)	−75	50	40	16.7	16.7	16.7
Ti–0.2Pd	B 337	51	7							
Ti	B 337	52	3	(17)	−75	65	55	21.7	20.8	19.0
Plates and Sheets										
Ti	B 265	51	1	...	−75	35	25	11.6	10.8	9.7
Ti	B 265	51	2	...	−75	50	40	16.7	16.7	16.7
Ti	B 265	52	3	...	−75	65	55	21.7	20.8	19.0
Forgings										
Ti	B 381	51	F1	...	−75	35	25	11.7	10.8	9.7
Ti	B 381	51	F2	...	−75	50	40	16.7	16.7	16.7
Ti	B 381	52	F3	...	−75	65	55	21.7	20.8	19.0
Zirconium and Zirconium Alloy Pipes and Tubes (2)										
Zr	B 523	61	R60702	...	−75	55	30	17.3	16.0	14.7
Zr	B 658									
Zr + Cb	B 523	62	R60705	(73)	−75	80	55	26.7	24.6	22.1
Zr + Cb	B 658									
Plates and Sheets										
Zr	B 551	61	R60702	...	−75	55	30	17.3	16.0	14.7
Zr + Cb	B 551	62	R60705	(73)	−75	80	55	26.7	24.6	22.1
Forgings and Bar										
Zr	B 493	61	R60702	...	−75	55	30	17.3	16.0	14.7
Zr	B 550									
Zr + Cb	B 493	62	R60705	(73)	−75	70	55	23.3	...	...
Zr + Cb	B 550	62	R60705	(73)	−75	80	55	26.7	24.6	22.1

Copyright ASME International
Provided by IHS under license with ASME
No reproduction or networking permitted without license from IHS
Not for Resale

Table A-1 Basic Allowable Stresses in Tension for Metals[1] (Cont'd)

Numbers in Parentheses Refer to Notes for Appendix A Tables; Specifications Are ASTM Unless Otherwise Indicated

Basic Allowable Stress *S*, ksi (1), at Metal Temperature, °F (7)											
250	300	350	400	450	500	550	600	650	700	Grade	Spec. No.
										Titanium and Titanium Alloy Pipes and Tubes (2)	
8.6	7.7	6.9	6.4	6.0	5.3	4.7	4.2	...	...	1	B 337
13.7	12.3	10.9	9.8	8.8	8.0	7.5	7.3	...	...	2	B 337
										7	B 337
17.3	15.6	13.9	12.3	11.1	9.9	8.9	8.0	...	...	3	B 337
										Plates and Sheets	
8.6	7.7	6.9	6.4	6.0	5.3	4.7	4.2	...	...	1	B 265
13.7	12.3	10.9	9.8	8.8	8.0	7.5	7.3	...	...	2	B 265
17.3	15.6	13.9	12.3	11.1	9.9	8.9	8.0	...	...	3	B 265
										Forgings	
8.6	7.7	6.9	6.4	6.0	5.3	4.7	4.2	...	...	F1	B 381
13.7	12.3	10.9	9.8	8.8	8.0	7.5	7.3	...	...	F2	B 381
17.3	15.6	13.9	12.3	11.1	9.9	8.9	8.0	...	...	F3	B 381
										Zirconium and Zirconium Alloy Pipes and Tubes (2)	
13.5	12.4	11.5	9.3	8.9	8.1	8.0	7.9	7.2	6.4	R60702	B 523, B 658
20.5	18.6	17.7	16.7	16.2	15.6	14.8	13.9	13.6	13.2	R60705	B 523, B 658
										Plates and Sheets	
13.5	12.4	11.5	9.3	8.9	8.1	8.0	7.9	7.2	6.4	R60702	B 551
20.5	18.6	17.7	16.7	16.2	15.6	14.8	13.9	13.6	13.2	R60705	B 551
										Forgings and Bar	
13.5	12.4	11.5	9.3	8.9	8.1	8.0	7.9	7.2	6.4	R60702	B 493, B 550
...	...	...	...	...	...	...	...	...	...	R60705	B 493
20.5	18.6	17.7	16.7	16.2	15.6	14.8	13.9	13.6	13.3	R60705	B 550

Copyright ASME International
Provided by IHS under license with ASME
No reproduction or networking permitted without license from IHS
Not for Resale

Table A-1 Basic Allowable Stresses in Tension for Metals[1] (Cont'd)

Numbers in Parentheses Refer to Notes for Appendix A Tables; Specifications Are ASTM Unless Otherwise Indicated

Spec. No.	P-No. or S-No. (5)	Grade	Temper	Size or Thickness Range, in.	Notes	Min. Temp., °F (6)	Specified Min. Strength, ksi		Basic Allowable Stress *S*, ksi (1), at Metal Temperature, °F (7)						
							Tensile	Yield	Min. Temp. to 100	150	200	250	300	350	400
Aluminum Alloy															
Seamless Pipes and Tubes															
B 210, B 241 B 345	21 S-21	1060	O, H112, H113	...	(14)(33)	−452	8.5	2.5	1.7	1.7	1.6	1.5	1.3	1.1	0.8
B 210	21	1060	H14	...	(14)(33)	−452	12	10	4.0	4.0	4.0	3.0	2.6	1.8	1.1
B 241	21	1100	O, H112	...	(14)(33)	−452	11	3	2.0	2.0	2.0	1.9	1.7	1.3	1.0
B 210	21	1100	H113	...	(14)(33)	−452	11	3.5	2.3	2.3	2.3	2.3	1.7	1.3	1.0
B 210	21	1100	H14	...	(14)(33)	−452	16	14	5.3	5.3	5.3	4.9	2.8	1.9	1.1
B 210, B 241 B 345, B 491	21 S-21	3003	O, H112	...	(14)(33)	−452	14	5	3.3	3.3	3.3	3.1	2.4	1.8	1.4
B 210	21	3003	H14	...	(14)(33)	−452	20	17	6.7	6.7	6.7	4.8	4.3	3.0	2.3
B 210, B 241 B 345	21 S-21	3003	H18	...	(14)(33)	−452	27	24	9.0	9.0	8.9	6.3	5.4	3.5	2.5
B 210, B 241 B 345	21 S-21	Alclad 3003	O, H112	...	(14)(33)	−452	13	4.5	3.0	3.0	3.0	2.8	2.2	1.6	1.3
B 210	21	Alclad 3003	H14	...	(14)(33)	−452	19	16	6.0	6.0	6.0	4.3	3.9	2.7	2.1
B 210	21	Alclad 3003	H18	...	(14)(33)	−452	26	23	8.1	8.1	8.0	5.7	4.9	3.2	2.2
B 210, B 241	22	5052	O	...	(14)	−452	25	10	6.7	6.7	6.7	6.2	5.6	4.1	2.3
B 210	22	5052	H32	...	(14)(33)	−452	31	23	10.3	10.3	10.3	7.5	6.2	4.1	2.3
B 210	22	5052	H34	...	(14)(33)	−452	34	26	11.3	11.3	11.3	8.4	6.2	4.1	2.3
B 241 B 210, B 345	25 S-25	5083	O, H112	...	(33)	−452	39	16	10.7	10.7	...	...	...	...	...
B 241 B 210, B 345	25 S-25	5086	O, H112	...	(33)	−452	35	14	9.3	9.3	...	...	...	...	...
B 210	S-25	5086	H32	...	(33)	−452	40	28	13.3	13.3	...	...	...	...	...
B 210	S-25	5086	H34	...	(33)	−452	44	34	14.7	14.7	...	...	...	...	...
B 210	22	5154	O	...	...	−452	30	11	7.3	7.3	...	...	...	...	...
B 210	22	5154	H34	...	(33)	−452	39	29	13.3	13.0	...	...	...	...	...
B 241	22	5454	O, H112	...	(33)	−452	31	12	8.0	8.0	8.0	7.4	5.5	4.1	3.0
B 210 B 241	25 S-25	5456	O, H112	...	(33)	−452	41	19	12.7	12.7	...	...	...	...	..
B 241	22	5652	O, H112	...	(33)	−452	25	10	6.7	6.7	6.7	6.2	5.6	4.1	2.3
B 210	23	6061	T4	...	(33)	−452	30	16	10.0	10.0	10.0	9.8	9.2	7.9	5.6
B 241 B 345	23 S-23	6061	T4	...	(33)(63)	−452	26	16	8.7	8.7	8.7	8.5	8.0	7.9	5.6

Copyright ASME International
Provided by IHS under license with ASME
No reproduction or networking permitted without license from IHS
Not for Resale

Table A-1 Basic Allowable Stresses in Tension for Metals[1] (Cont'd)

Numbers in Parentheses Refer to Notes for Appendix A Tables; Specifications Are ASTM Unless Otherwise Indicated

Spec. No.	P-No. or S-No. (5)	Grade	Temper	Size or Thickness Range, in.	Notes	Min. Temp., °F (6)	Specified Min. Strength, ksi		Basic Allowable Stress *S*, ksi (1), at Metal Temperature, °F (7)						
							Tensile	Yield	Min. Temp. to 100	150	200	250	300	350	400
Aluminum Alloy (Cont'd)															
Seamless Pipes and Tubes (Cont'd)															
B 210	23	6061	T6	...	(33)	−452	42	35	14.0	14.0	14.0	13.2	11.3	7.9	5.6
B 241 B 345	23 S-23	6061	T6	...	(33)(63)	−452	38	35	12.7	12.7	12.7	12.1	10.6	7.9	5.6
B 210, B 241 B 345	23 S-23	6061	T4, T6 wld.	...	(22)(63)	−452	24	...	8.0	8.0	8.0	7.9	7.4	6.1	4.3
B 210	23	6063	T4	...	(33)	−452	22	10							
B 241	23														
B 345	S-23	6063	T4	≤ 0.500	(33)	−452	19	10	6.7	6.7	6.7	6.7	6.7	3.4	2.0
B 241	23														
B 345	S-23	6063	T5	≤ 0.500	(33)	−452	22	16	7.3	7.3	7.2	6.8	6.1	3.4	2.0
B 210	23	6063	T6	...	(33)	−452	33	28	11.0	11.0	10.5	9.5	7.0	3.4	2.0
B 241	23														
B 345	S-23	6063	T6	...	(33)	−452	30	25	10.0	10.0	9.8	9.0	6.6	3.4	2.0
B 210, B 241 B 345	23 S-23	6063	T4, T5, T6 wld.	...	...	−452	17	...	5.7	5.7	5.7	5.6	5.2	3.0	2.0
Welded Pipes and Tubes															
B 547	25	5083	O	...	...	−452	40	18	12.0	12.0	...	...	...	...	...
Structural Tubes															
B 221	21	1060	O, H112	...	(33)(69)	−452	8.5	2.5	1.7	1.7	1.6	1.5	1.3	1.1	0.8
B 221	21	1100	O, H112	...	(33)(69)	−452	11	3	2.0	2.0	2.0	1.9	1.7	1.3	1.0
B 221	21	3003	O, H112	...	(33)(69)	−452	14	5	3.3	3.3	3.3	3.1	2.4	1.8	1.4
B 221	21	Alclad 3003	O, H112	...	(33)(69)	−452	13	4.5	3.0	3.0	3.0	2.8	2.2	1.6	1.3
B 221	22	5052	O	...	(69)	−452	25	10	6.7	6.7	6.7	6.2	5.6	4.1	2.3
B 221	25	5083	O	...	(69)	−452	39	16	10.7	10.7	...	...	...	...	...
B 221	25	5086	O	...	(69)	−452	35	14	9.3	9.3	...	...	...	...	...
B 221	22	5154	O	...	(69)	−452	30	11	7.3	7.3	...	...	...	...	...
B 221	22	5454	O	...	(69)	−452	31	12	8.0	8.0	8.0	7.4	5.5	4.1	3.0
B 221	25	5456	O	...	(69)	−452	41	19	12.7	12.7	...	...	...	...	...
B 221	23	6061	T4	...	(33)(63)(69)	−452	26	16	8.7	8.7	8.7	8.5	8.0	7.7	5.3
B 221	23	6061	T6	...	(33)(63)(69)	−452	38	35	12.7	12.7	12.7	12.1	10.6	7.9	5.6
B 221	23	6061	T4, T6 wld.	...	(22)(63)(69)	−452	24	...	8.0	8.0	8.0	7.9	7.4	6.1	4.3

Copyright ASME International
Provided by IHS under license with ASME
No reproduction or networking permitted without license from IHS
Not for Resale

Table A-1 Basic Allowable Stresses in Tension for Metals[1] (Cont'd)

Numbers in Parentheses Refer to Notes for Appendix A Tables; Specifications Are ASTM Unless Otherwise Indicated

Spec. No.	P-No. or S-No. (5)	Grade	Temper	Size or Thickness Range, in.	Notes	Min. Temp., °F (6)	Specified Min. Strength, ksi		Basic Allowable Stress *S*, ksi (1), at Metal Temperature, °F (7)						
							Tensile	Yield	Min. Temp. to 100	150	200	250	300	350	400
Aluminum Alloy (Cont'd)															
Structural Tubes (Cont'd)															
B 221	23	6063	T4	≤ 0.500	(13)(33)(69)	−452	19	10	6.4	6.4	6.4	6.4	6.4	3.4	2.0
B 221	23	6063	T5	≤ 0.500	(13)(33)(69)	−452	22	16	7.3	7.3	7.2	6.8	6.1	3.4	2.0
B 221	23	6063	T6	...	(33)(69)	−452	30	25	10.0	10.0	9.8	9.0	6.6	3.4	2.0
B 221	23	6063	T4, T5, T6 wld.	...	(69)	−452	17	...	5.7	5.7	5.7	5.6	5.2	3.0	2.0
Plates and Sheets															
B 209	21	1060	O	...	...	−452	8	2.5	1.7	1.7	1.6	1.5	1.3	1.1	0.8
B 209	21	1060	H112	0.500–1.000	(13)(33)	−452	10	5	3.3	3.2	2.9	1.9	1.7	1.4	1.0
B 209	21	1060	H12	...	(33)	−452	11	9	3.7	3.7	3.4	2.3	2.0	1.8	1.1
B 209	21	1060	H14	...	(33)	−452	12	10	4.0	4.0	4.0	3.0	2.6	1.8	1.1
B 209	21	1100	O	...	...	−452	11	3.5	2.3	2.3	2.3	2.3	1.7	1.3	1.0
B 209	21	1100	H112	0.500–2.000	(13)(33)	−452	12	5	3.3	3.3	3.3	2.5	2.2	1.7	1.0
B 209	21	1100	H12	...	(33)	−452	14	11	4.7	4.7	4.7	3.2	2.8	1.9	1.1
B 209	21	1100	H14	...	(33)	−452	16	14	5.3	5.3	5.3	3.7	2.8	1.9	1.1
B 209	21	3003	O	...	...	−452	14	5	3.3	3.3	3.3	3.1	2.4	1.8	1.4
B 209	21	3003	H112	0.500–2.000	(13)(33)	−452	15	6	4.0	4.0	3.9	3.1	2.4	1.8	1.4
B 209	21	3003	H12	...	(33)	−452	17	12	5.7	5.7	5.7	4.0	3.6	3.0	2.3
B 209	21	3003	H14	...	(33)	−452	20	17	6.7	6.7	6.7	4.8	4.3	3.0	2.3
B 209	21	Alclad 3003	O	0.006–0.499	(66)	−452	13	4.5							
B 209	21	Alclad 3003	O	0.500–3.000	(68)	−452	14	5	3.0	3.0	3.0	2.8	2.2	1.6	1.3
B 209	21	Alclad 3003	H112	0.500–2.000	(33)(66)	−452	15	6	3.6	3.6	3.5	2.8	2.2	1.6	1.3
B 209	21	Alclad 3003	H12	0.017–0.499	(33)(66)	−452	16	11							
B 209	21	Alclad 3003	H12	0.500–2.000	(33)(68)	−452	17	12	5.1	5.1	5.1	3.6	3.2	2.7	2.1
B 209	21	Alclad 3003	H14	0.009–0.499	(33)(66)	−452	19	16							
B 209	21	Alclad 3003	H14	0.500–1.000	(33)(68)	−452	20	17	6.0	6.0	6.0	4.3	3.9	2.7	2.1
B 209	22	3004	O	...	...	−452	22	8.5	5.7	5.7	5.7	5.7	5.7	3.8	2.3
B 209	22	3004	H112	...	(33)	−452	23	9	6.0	6.0	6.0	6.0	5.8	3.8	2.3
B 209	22	3004	H32	...	(33)	−452	28	21	9.3	9.3	9.3	7.0	5.8	3.8	2.3
B 209	22	3004	H34	...	(33)	−452	32	25	10.7	10.7	10.7	8.0	5.8	3.8	2.3

Copyright ASME International
Provided by IHS under license with ASME
No reproduction or networking permitted without license from IHS
Not for Resale

Table A-1 Basic Allowable Stresses in Tension for Metals[1] (Cont'd)

Numbers in Parentheses Refer to Notes for Appendix A Tables; Specifications Are ASTM Unless Otherwise Indicated

Spec. No.	P-No. or S-No. (5)	Grade	Temper	Size or Thickness Range, in.	Notes	Min. Temp., °F (6)	Specified Min. Strength, ksi		Basic Allowable Stress *S*, ksi (1), at Metal Temperature, °F (7)						
							Tensile	Yield	Min. Temp. to 100	150	200	250	300	350	400
Aluminum Alloy (Cont'd)															
Plates and Sheets (Cont'd)															
B 209	22	Alclad 3004	O	0.006–0.499	(66)	−452	21	8	5.1	5.1	5.1	5.1	5.1	3.4	2.1
B 209	22	Alclad 3004	O	0.500–3.000	(68)	−452	22	8.5							
B 209	22	Alclad 3004	H112	0.250–0.499	(33)(66)	−452	22	8.5	5.4	5.4	5.4	5.4	5.2	3.4	2.1
B 209	22	Alclad 3004	H112	0.500 3.000	(33)(68)	−452	23	9							
B 209	22	Alclad 3004	H32	0.017–0.499	(33)(66)	−452	27	20	8.4	8.4	8.4	6.3	5.2	3.4	2.1
B 209	22	Alclad 3004	H32	0.500–2.000	(33)(68)	−452	28	21							
B 209	22	Alclad 3004	H34	0.009–0.499	(33)(66)	−452	31	24	9.6	9.6	9.6	7.2	5.2	3.4	2.1
B 209	22	Alclad 3004	H34	0.500–1.000	(33)(68)	−452	32	25							
B 209	S-21	5050	O	...	...	−452	18	6	4.0	4.0	4.0	4.0	4.0	2.8	1.4
B 209	S-21	5050	H112	...	(33)	−452	20	8	5.3	5.3	5.3	5.3	5.3	2.8	1.4
B 209	S-21	5050	H32	...	(33)	−452	22	16	7.3	7.3	7.3	5.5	5.3	2.8	1.4
B 209	S-21	5050	H34	...	(33)	−452	25	20	8.3	8.3	8.3	6.3	5.3	2.8	1.4
B 209	22	5052 & 5652	O	...	...	−452	25	9.5	6.3	6.3	6.3	6.2	5.6	4.1	2.3
B 209	22	5052 & 5652	H112	0.500–3.00	(13)(33)										
B 209	22	5052 & 5652	H32	...	(33)	−452	31	23	10.3	10.3	10.3	7.5	6.2	4.1	2.3
B 209	22	5052 & 5652	H34	...	(33)	−452	34	26	11.3	11.3	11.3	8.4	6.2	4.1	2.3
B 209	25	5083	O	0.051–1.500	(13)	−452	40	18	12.0	12.0	...	...	...	...	...
B 209	25	5083	H321	0.188–1.500	(13)(33)	−452	44	31	14.7	14.7	...	...	...	...	...
B 209	25	5086	O	...	...	−452	35	14	9.3	9.3	...	...	...	...	...
B 209	25	5086	H112	0.500–1.000	(13)(33)	−452	35	16							
B 209	25	5086	H32	...	(33)	−452	40	28	13.3	13.3	...	...	...	...	...
B 209	25	5086	H34	...	(33)	−452	44	34	14.7	14.7	...	...	...	...	...
B 209	22	5154 & 5254	O	...	...	−452	30	11	7.3	7.3	...	...	...	...	...
B 209	22	5154 & 5254	H112	0.500–3.000	(13)(33)										
B 209	22	5154 & 5254	H32	...	(33)	−452	36	26	12.0	12.0	...	...	...	...	...
B 209	22	5154 & 5254	H34	...	(33)	−452	39	29	13.0	13.0	...	...	...	...	...

Copyright ASME International
Provided by IHS under license with ASME
No reproduction or networking permitted without license from IHS
Not for Resale

Table A-1 Basic Allowable Stresses in Tension for Metals[1] (Cont'd)

Numbers in Parentheses Refer to Notes for Appendix A Tables; Specifications Are ASTM Unless Otherwise Indicated

Spec. No.	P-No. or S-No. (5)	Grade	Temper	Size or Thickness Range, in.	Notes	Min. Temp., °F (6)	Specified Min. Strength, ksi		Basic Allowable Stress *S*, ksi (1), at Metal Temperature, °F (7)						
							Tensile	Yield	Min. Temp. to 100	150	200	250	300	350	400
Aluminum Alloy (Cont'd)															
Plates and Sheets (Cont'd)															
B 209	22	5454	O	...	...	−452	31	12	8.0	8.0	8.0	7.4	5.5	4.1	3.0
B 209	22	5454	H112	0.500–3.000	(13)(33)										
B 209	22	5454	H32	...	(33)	−452	36	26	12.0	12.0	12.0	7.5	5.5	4.1	3.0
B 209	22	5454	H34	...	(33)	−452	39	29	13.0	13.0	13.0	7.5	5.5	4.1	3.0
B 209	25	5456	O	0.051–1.500	(13)	−452	42	19	12.7	12.7	...	...	...	...	...
B 209	25	5456	H321	0.188–0.499	(13)(33)	−452	46	33	15.3	15.3	...	...	...	...	...
B 209	23	6061	T4	...	(33)(63)	−452	30	16	10.0	10.0	10.0	9.8	9.2	7.9	5.6
B 209	23	6061	T6	...	(33)										
B 209	23	6061	T651	0.250–4.000	(13)(33)	−452	42	35	14.0	14.0	14.0	13.2	11.2	7.9	5.6
B 209	23	6061	T4, T6 wld.	...	(22)(63)	−452	24	...	8.0	8.0	8.0	7.9	7.4	6.1	4.3
B 209	23	Alclad 6061	T4	...	(33)(66)	−452	27	14							
B 209	23	Alclad 6061	T451	0.250–0.499	(33)(66)	−452	27	14	9.0	9.0	9.0	8.8	8.3	7.1	5.0
B 209	23	Alclad 6061	T451	0.500–3.000	(33)(68)	−452	30	16							
B 209	23	Alclad 6061	T6	...											
B 209	23	Alclad 6061	T651	0.250–0.499	(33)(66)	−452	38	32	12.6	12.6	12.6	11.9	10.1	7.1	5.0
B 209	23	Alclad 6061	T651	0.500–4.000	(33)(68)	−452	42	35							
B 209	23	Alclad 6061	T4, T6 wld.	...	(22)(63)	−452	24	...	8.0	8.0	8.0	7.9	7.4	6.1	4.3
Forgings and Fittings (2)															
B 247	21	3003	H112, H112 wld.	...	(9)(45)	−452	14	5	3.3	3.3	3.3	3.1	2.4	1.8	1.4
B 247	25	5083	O, H112, H112 wld.	...	(9)(32)(33)	−452	38	16	10.7	10.7	...	..	...	...	...
B 247	23	6061	T6	...	(9)(33)	−452	38	35	12.7	12.7	12.7	12.1	10.6	7.9	5.6
B 247	23	6061	T6 wld.	...	(9)(22)	−452	24	...	8.0	8.0	8.0	7.9	7.4	6.1	4.3
B 361	S-21	WP1060	O, H112	...	(13)(14)(23)(32)(33)	−452	8	2.5	1.7	1.7	1.6	1.5	1.3	1.1	0.8

Copyright ASME International
Provided by IHS under license with ASME
No reproduction or networking permitted without license from IHS
Not for Resale

Table A-1 Basic Allowable Stresses in Tension for Metals[1] (Cont'd)

Numbers in Parentheses Refer to Notes for Appendix A Tables; Specifications Are ASTM Unless Otherwise Indicated

Spec. No.	P-No. or S-No. (5)	Grade	Temper	Size or Thickness Range, in.	Notes	Min. Temp., °F (6)	Specified Min. Strength, ksi		Basic Allowable Stress *S*, ksi (1), at Metal Temperature, °F (7)						
							Tensile	Yield	Min. Temp. to 100	150	200	250	300	350	400
Aluminum Alloy (Cont'd)															
Forgings and Fittings (2) (Cont'd)															
B 361	S-21	WP1100	O, H112	...	(13)(14)(23)(32)(33)	−452	11	3	2.0	2.0	2.0	1.9	1.7	1.3	1.0
B 361	S-21	WP3003	O, H112	...	(13)(14)(23)(32)(33)	−452	14	5	3.3	3.3	3.3	3.1	2.4	1.8	1.4
B 361	S-21	WP Alclad 3003	O, H112	...	(13)(14)(23)(32)(33)(66)	−452	13	4.5	3.0	3.0	3.0	2.8	2.2	1.6	1.3
B 361	S-25	WP5083	O, H112	...	(13)(23)(32)(33)	−452	39	16	10.7	10.7	...	...	...	...	...
B 361	S-22	WP5154	O, H112	...	(23)(32)(33)	−452	30	11	7.3	7.3	...	...	...	...	...
B 361	S-23	WP6061	T4	...	(13)(23)(32)(33)(63)	−452	26	16	8.7	8.7	8.7	8.5	8.0	7.7	5.6
B 361	S-23	WP6061	T6	...	(13)(23)(32)(33)(63)	−452	38	35	12.7	12.7	12.7	12.1	10.6	7.9	5.6
B 361	S-23	WP6061	T4, T6 wld.	...	(22)(23)(32)(63)	−452	24	...	8.0	8.0	8.0	7.9	7.4	6.1	4.3
B 361	S-23	WP6063	T4	...	(13)(23)(32)(33)	−452	18	9	6.0	6.0	6.0	6.0	6.0	3.4	2.0
B 361	S-23	WP6063	T6	...	(13)(23)(32)(33)	−452	30	25	10.0	10.0	9.8	9.0	6.6	3.4	2.0
B 361	S-23	WP6063	T4, T6 wld.	...	(23)(32)	−452	17	...	5.7	5.7	5.7	5.6	5.2	3.0	2.0
Castings (2)															
B 26	...	443.0	F	...	(9)(43)	−452	17	6	4.0	4.0	4.0	4.0	4.0	4.0	3.0
B 26	...	356.0	T6	...	(9)(43)	−452	30	20	10.0	10.0	10.0	8.4	...	...	...
B 26	...	356.0	T71	...	(9)(43)	−452	25	18	8.3	8.3	8.3	8.1	7.3	5.5	2.4

Copyright ASME International
Provided by IHS under license with ASME
No reproduction or networking permitted without license from IHS
Not for Resale

Table A-1A Basic Casting Quality Factors E_c

These quality factors are determined in accordance with para. 302.3.3(b). See also para. 302.3.3(c) and Table 302.3.3C for increased quality factors applicable in special cases. Specifications are ASTM.

Spec. No.	Description	E_c [Note (2)]	Appendix A Notes
Iron			
A 47	Malleable iron castings	1.00	(9)
A 48	Gray iron castings	1.00	(9)
A 126	Gray iron castings	1.00	(9)
A 197	Cupola malleable iron castings	1.00	(9)
A 278	Gray iron castings	1.00	(9)
A 395	Ductile and ferritic ductile iron castings	0.80	(9), (40)
A 571	Austenitic ductile iron castings	0.80	(9), (40)
Carbon Steel			
A 216	Carbon steel castings	0.80	(9), (40)
A 352	Ferritic steel castings	0.80	(9), (40)
Low and Intermediate Alloy Steel			
A 217	Martensitic stainless and alloy castings	0.80	(9), (40)
A 352	Ferritic steel castings	0.80	(9), (40)
A 426	Centrifugally cast pipe	1.00	(10)
Stainless Steel			
A 351	Austenitic steel castings	0.80	(9), (40)
A 451	Centrifugally cast pipe	0.90	(10), (40)
A 487	Steel castings	0.80	(9), (40)
Copper and Copper Alloy			
B 61	Steam bronze castings	0.80	(9), (40)
B 62	Composition bronze castings	0.80	(9), (40)
B 148	Al–bronze and Si–Al–bronze castings	0.80	(9), (40)
B 584	Copper alloy castings	0.80	(9), (40)
Nickel and Nickel Alloy			
A 494	Nickel and nickel alloy castings	0.80	(9), (40)
Aluminum Alloy			
B 26, Temper F	Aluminum alloy castings	1.00	(9), (10)
B 26, Temper T6, T71	Aluminum alloy castings	0.80	(9), (40)

Copyright ASME International
Provided by IHS under license with ASME
No reproduction or networking permitted without license from IHS Not for Resale

Table A-1B Basic Quality Factors for Longitudinal Weld Joints in Pipes, Tubes, and Fittings E_j

These quality factors are determined in accordance with para. 302.3.4(a). See also para. 302.3.4(b) and Table 302.3.4 for increased quality factors applicable in special cases. Specifications, except API, are ASTM.

Spec. No.	Class (or Type)	Description	E_j (2)	Appendix A Notes
Carbon Steel				
API 5L	...	Seamless pipe	1.00	...
	...	Electric resistance welded pipe	0.85	...
	...	Electric fusion welded pipe, double butt, straight or spiral seam	0.95	...
	...	Furnace butt welded	0.60	...
A 53	Type S	Seamless pipe	1.00	...
	Type E	Electric resistance welded pipe	0.85	...
	Type F	Furnace butt welded pipe	0.60	...
A 105	...	Forgings and fittings	1.00	(9)
A 106	...	Seamless pipe	1.00	...
A 134	...	Electric fusion welded pipe, single butt, straight or spiral seam	0.80	...
A 135	...	Electric resistance welded pipe	0.85	...
A 139	...	Electric fusion welded pipe, straight or spiral seam	0.80	...
A 179	...	Seamless tube	1.00	...
A 181	...	Forgings and fittings	1.00	(9)
A 234	...	Seamless and welded fittings	1.00	(16)
A 333	...	Seamless pipe	1.00	...
	...	Electric resistance welded pipe	0.85	...
A 334	...	Seamless tube	1.00	...
A 350	...	Forgings and fittings	1.00	(9)
A 369	...	Seamless pipe	1.00	...
A 381	...	Electric fusion welded pipe, 100% radiographed	1.00	(18)
	...	Electric fusion welded pipe, spot radiographed	0.90	(19)
	...	Electric fusion welded pipe, as manufactured	0.85	...
A 420	...	Welded fittings, 100% radiographed	1.00	(16)
A 524	...	Seamless pipe	1.00	...
A 587	...	Electric resistance welded pipe	0.85	...
A 671	12, 22, 32, 42, 52	Electric fusion welded pipe, 100% radiographed	1.00	...
	13, 23, 33, 43, 53	Electric fusion welded pipe, double butt seam	0.85	...
A 672	12, 22, 32, 42, 52	Electric fusion welded pipe, 100% radiographed	1.00	...
	13, 23, 33, 43, 53	Electric fusion welded pipe, double butt seam	0.85	...
A 691	12, 22, 32, 42, 52	Electric fusion welded pipe, 100% radiographed	1.00	...
	13, 23, 33, 43, 53	Electric fusion welded pipe, double butt seam	0.85	...
Low and Intermediate Alloy Steel				
A 182	...	Forgings and fittings	1.00	(9)
A 234	...	Seamless and welded fittings	1.00	(16)
A 333	...	Seamless pipe	1.00	...
	...	Electric resistance welded pipe	0.85	...
A 334	...	Seamless tube	1.00	...
A 335	...	Seamless pipe	1.00	...
A 350	...	Forgings and fittings	1.00	...
A 369	...	Seamless pipe	1.00	...
A 420	...	Welded fittings, 100% radiographed	1.00	(16)
A 671	12, 22, 32, 42, 52	Electric fusion welded pipe, 100% radiographed	1.00	...
	13, 23, 33, 43, 53	Electric fusion welded pipe, double butt seam	0.85	...

Copyright ASME International
Provided by IHS under license with ASME
No reproduction or networking permitted without license from IHS
Not for Resale

Table A-1B Basic Quality Factors for Longitudinal Weld Joints in Pipes, Tubes, and Fittings E_j (Cont'd)

These quality factors are determined in accordance with para. 302.3.4(a). See also para. 302.3.4(b) and Table 302.3.4 for increased quality factors applicable in special cases. Specifications, except API, are ASTM.

Spec. No.	Class (or Type)	Description	E_j (2)	Appendix A Notes
Low and Intermediate Alloy Steel (Cont'd)				
A 672	12, 22, 32, 42, 52	Electric fusion welded pipe, 100% radiographed	1.00	...
	13, 23, 33, 43, 53	Electric fusion welded pipe, double butt seam	0.85	...
A 691	12, 22, 32, 42, 52	Electric fusion welded pipe, 100% radiographed	1.00	...
	13, 23, 33, 43, 53	Electric fusion welded pipe, double butt seam	0.85	...
Stainless Steel				
A 182	...	Forgings and fittings	1.00	...
A 268	...	Seamless tube	1.00	...
	...	Electric fusion welded tube, double butt seam	0.85	...
	...	Electric fusion welded tube, single butt seam	0.80	...
A 269	...	Seamless tube	1.00	...
	...	Electric fusion welded tube, double butt seam	0.85	...
	...	Electric fusion welded tube, single butt seam	0.80	...
A 312	...	Seamless tube	1.00	...
	...	Electric fusion welded tube, double butt seam	0.85	...
	...	Electric fusion welded tube, single butt seam	0.80	...
A 358	1, 3, 4	Electric fusion welded pipe, 100% radiographed	1.00	...
	5	Electric fusion welded pipe, spot radiographed	0.90	...
	2	Electric fusion welded pipe, double butt seam	0.85	...
A 376	...	Seamless pipe	1.00	...
A 403	...	Seamless fittings	1.00	...
	...	Welded fitting, 100% radiographed	1.00	(16)
	...	Welded fitting, double butt seam	0.85	...
	...	Welded fitting, single butt seam	0.80	...
A 409	...	Electric fusion welded pipe, double butt seam	0.85	...
	...	Electric fusion welded pipe, single butt seam	0.80	...
A 487	...	Steel castings	0.80	(9)(40)
A 789	...	Seamless tube	1.00	...
	...	Electric fusion welded, 100% radiographed	1.00	...
	...	Electric fusion welded, double butt	0.85	...
	...	Electric fusion welded, single butt	0.80	...
A 790	...	Seamless pipe	1.00	...
	...	Electric fusion welded, 100% radiographed	1.00	...
	...	Electric fusion welded, double butt	0.85	...
	...	Electric fusion welded, single butt	0.80	...
A 815	...	Seamless fittings	1.00	...
	...	Welded fittings, 100% radiographed	1.00	(16)
	...	Welded fittings, double butt seam	0.85	...
	...	Welded fittings, single butt seam	0.80	...
Copper and Copper Alloy				
B 42	...	Seamless pipe	1.00	...
B 43	...	Seamless pipe	1.00	...
B 68	...	Seamless tube	1.00	...
B 75	...	Seamless tube	1.00	...
B 88	...	Seamless water tube	1.00	...
B 280	...	Seamless tube	1.00	...
B 466	...	Seamless pipe and tube	1.00	...
B 467	...	Electric resistance welded pipe	0.85	...
	...	Electric fusion welded pipe, double butt seam	0.85	...
	...	Electric fusion welded pipe, single butt seam	0.80	...

Copyright ASME International
Provided by IHS under license with ASME
No reproduction or networking permitted without license from IHS Not for Resale

Table A-1B Basic Quality Factors for Longitudinal Weld Joints in Pipes, Tubes, and Fittings E_j (Cont'd)

These quality factors are determined in accordance with para. 302.3.4(a). See also para. 302.3.4(b) and Table 302.3.4 for increased quality factors applicable in special cases. Specifications, except API, are ASTM.

Spec. No.	Class (or Type)	Description	E_j (2)	Appendix A Notes
Nickel and Nickel Alloy				
B 160	...	Forgings and fittings	1.00	(9)
B 161	...	Seamless pipe and tube	1.00	...
B 164	...	Forgings and fittings	1.00	(9)
B 165	...	Seamless pipe and tube	1.00	...
B 167	...	Seamless pipe and tube	1.00	...
B 366	...	Seamless and welded fittings	1.00	(16)
B 407	...	Seamless pipe and tube	1.00	...
B 444	...	Seamless pipe and tube	1.00	...
B 464	...	Welded pipe	0.80	...
B 514	...	Welded pipe	0.80	...
B 517	...	Welded pipe	0.80	...
B 564	...	Nickel alloy forgings	1.00	(9)
B 619	...	Electric resistance welded pipe	0.85	...
	...	Electric fusion welded pipe, double butt seam	0.85	...
	...	Electric fusion welded pipe, single butt seam	0.80	...
B 622	...	Seamless pipe and tube	1.00	...
B 675	All	Welded pipe	0.80	...
B 690	...	Seamless pipe	1.00	...
B 705	...	Welded pipe	0.80	...
B 725	...	Electric fusion welded pipe, double butt seam	0.85	...
	...	Electric fusion welded pipe, single butt seam	0.80	...
B 729	...	Seamless pipe and tube	1.00	...
B 804	1, 3, 5	Welded pipe, 100% radiographed	1.00	...
	2, 4	Welded pipe, double fusion welded	0.85	...
	6	Welded pipe, single fusion welded	0.80	...
Titanium and Titanium Alloy				
B 337	...	Seamless pipe	1.00	...
	...	Electric fusion welded pipe, double butt seam	0.85	...
Zirconium and Zirconium Alloy				
B 523	...	Seamless tube	1.00	...
	...	Electric fusion welded tube	0.80	...
B 658	...	Seamless pipe	1.00	...
	...	Electric fusion welded pipe	0.80	...
Aluminum Alloy				
B 210	...	Seamless tube	1.00	...
B 241	...	Seamless pipe and tube	1.00	...
B 247	...	Forgings and fittings	1.00	(9)
B 345	...	Seamless pipe and tube	1.00	...
B 361	...	Seamless fittings	1.00	...
	...	Welded fittings, 100% radiograph	1.00	(18)(23)
	...	Welded fittings, double butt	0.85	(23)
	...	Welded fittings, single butt	0.80	(23)
B 547	...	Welded pipe and tube, 100% radiograph	1.00	...
	...	Welded pipe, double butt seam	0.85	...
	...	Welded pipe, single butt seam	0.80	...

Copyright ASME International
Provided by IHS under license with ASME
No reproduction or networking permitted without license from IHS
Not for Resale

(04)

Table A-2 Design Stress Values for Bolting Materials[1]

Numbers in Parentheses Refer to Notes for Appendix A Tables; Specifications Are ASTM

Material	Spec. No.	Grade	Size Range, Diam., in.	Notes	Min. Temp., °F (6)	Specified Min. Strength, ksi		Min. Temp. to 100	200	300	400	500	600
						Tensile	Yield						
Carbon Steel													
...	A 675	45	...	(8f)(8g)	−20	45	22.5	11.2	11.2	11.2	11.2	11.2	11.2
...	A 675	50	...	(8f)(8g)	−20	50	25	12.5	12.5	12.5	12.5	12.5	12.5
...	A 675	55	...	(8f)(8g)	−20	55	27.5	13.7	13.7	13.7	13.7	13.7	13.7
...	A 307	B	...	(8f)(8g)	−20	60	...	13.7	13.7	13.7	13.7	13.7	...
...	A 675	60	...	(8f)(8g)	−20	60	30	15.0	15.0	15.0	15.0	15.0	15.0
...	A 675	65	...	(8g)	−20	65	32.5	16.2	16.2	16.2	16.2	16.2	16.2
...	A 675	70	...	(8g)	−20	70	35	17.5	17.5	17.5	17.5	17.5	17.5
...	A 325	...	...	(8g)	−20	105	81	19.3	19.3	19.3	19.3	19.3	19.3
...	A 675	80	...	(8g)	−20	80	40	20.0	20.0	20.0	20.0	20.0	20.0
Nuts	A 194	1	...	(42)	−20	...	...	...	...	...	...	...	...
Nuts	A 194	2, 2H											
...	A 194	2HM	...	(42)	−55	...	...	...	...	...	...	...	...
Nuts	A 563	A, hvy hex	...	(42b)	−20	...	...	...	...	...	...	...	...
Alloy Steel													
Cr–0.2Mo	A 193	B7M	≤ 4	...	−55								
Cr–0.20Mo	A 320	L7M	≤ 2½	...	−100	100	80	20.0	20.0	20.0	20.0	20.0	20.0
5Cr	A 193	B5	≤ 4	(15)	−20	100	80	20.0	20.0	20.0	20.0	20.0	20.0
Cr–Mo–V	A 193	B16	> 2½, ≤ 4	(15)	−20	110	95	22.0	22.0	22.0	22.0	22.0	22.0
...	A 354	BC	...	(15)	0	115	99	23.0	23.0	23.0	23.0	23.0	23.0
Cr–Mo	A 193	B7	> 2½, ≤ 4	(15)	−40	115	95	23.0	23.0	23.0	23.0	23.0	23.0
Ni–Cr–Mo	A 320	L43	≤ 4										
Cr–Mo	A 320	L7	≤ 2½	(15)	−150	125	105	25.0	25.0	25.0	25.0	25.0	25.0
Cr–Mo	A 320	L7A, L7B, L7C	≤ 2½	(15)	−150	125	105	25.0	25.0	25.0	25.0	25.0	25.0
Cr–Mo	A 193	B7	≤ 2½	...	−55	125	105	25.0	25.0	25.0	25.0	25.0	25.0
Cr–Mo–V	A 193	B16	≤ 2½	(15)	−20	125	105	25.0	25.0	25.0	25.0	25.0	25.0
...	A 354	BD	≤ 2½	(15)	−20	150	130	30.0	30.0	30.0	30.0	30.0	30.0
5Cr nuts	A 194	3	...	(42)	−20								
C–Mo nuts	A 194	4	...	(42)	−150								
Cr–Mo nuts	A 194	7	...	(42)	−150	...	...	...	...	...	...	...	...
Cr–Mo nuts	A 194	7M	...	(42)	−150								
Stainless Steel													
316	A 193												
316	A 320	B8M Cl. 2	> 1¼, ≤ 1½	(15)(60)	−325	90	50	18.8	16.2	16.2	16.2	16.2	16.2
304	A 193												
304	A 320	B8 Cl. 2	> 1¼, ≤ 1½	(15)(60)	−325	100	50	18.8	17.2	16.0	15.0	14.0	13.4
347	A 193												
347	A 320	B8C Cl. 2	> 1¼, ≤ 1½	(15)(60)	−325	100	50	18.8	17.8	16.5	16.3	16.3	16.3
321	A 193												
321	A 320	B8T Cl. 2	> 1¼, ≤ 1½	(15)(60)	−325	100	50	18.8	16.7	16.3	16.3	16.3	16.3
303 sol. trt.	A 320	B8F Cl. 1	...	(8f)(15)(39)	−325	75	30	18.8	13.0	12.0	10.9	10.0	9.3

Copyright ASME International
Provided by IHS under license with ASME
No reproduction or networking permitted without license from IHS
Not for Resale

Table A-2 Design Stress Values for Bolting Materials[1]

Numbers in Parentheses Refer to Notes for Appendix A Tables; Specifications Are ASTM

Design Stress, ksi (1), at Metal Temperature, °F (7)																			
650	700	750	800	850	900	950	1000	1050	1100	1150	1200	1250	1300	1350	1400	1450	1500	Grade	Spec. No.
																		Carbon Steel	
11.2	11.0	10.2	9.0	7.7	6.5	...	...	...	...	...	...	...	...	...	...	...	...	45	A 675
12.5	12.1	11.1	9.6	8.0	6.5	...	...	...	...	...	...	...	...	...	...	...	...	50	A 675
13.7	13.2	12.0	10.2	8.3	6.5	...	...	...	...	...	...	...	...	...	...	...	...	55	A 675
...	...	...	...	...	...	...	...	...	...	...	...	...	...	...	...	...	...	B	A 307
15.0	14.3	12.9	10.8	8.6	6.5	...	...	...	...	...	...	...	...	...	...	...	...	60	A 675
16.2	15.5	13.8	11.5	8.9	6.5	4.5	2.5	...	...	...	...	...	...	...	...	...	...	65	A 675
17.5	16.6	14.7	12.0	9.2	6.5	4.5	2.5	...	...	...	...	...	...	...	...	...	...	70	A 675
19.3	...	...	...	...	...	...	...	...	...	...	...	...	...	...	...	...	...	...	A 325
20.0	...	...	...	...	...	...	...	...	...	...	...	...	...	...	...	...	...	80	A 675
...	...	...	...	...	...	...	...	...	...	...	...	...	...	...	...	...	...	1, 2	A 194
																		2H	A 194
...	...	...	...	...	...	...	...	...	...	...	...	...	...	...	...	...	...	2HM	A 194
...	...	...	...	...	...	...	...	...	...	...	...	...	...	...	...	...	...	A, hvy hex	A 563
																		Alloy Steel	
																		B7M	A 193
20.0	20.0	20.0	18.5	16.2	12.5	8.5	4.5	...	...	...	...	...	...	...	...	...	...	L7M	A 320
20.0	20.0	20.0	18.5	14.5	10.4	7.6	5.6	4.2	3.1	2.0	1.3	...	...	...	...	...	...	B5	A 193
22.0	22.0	22.0	22.0	21.0	18.5	15.3	11.0	6.3	2.8	...	...	...	...	...	...	...	...	B16	A 193
20.0	...	...	...	...	...	...	...	...	...	...	...	...	...	...	...	...	...	BC	A 354
23.0	23.0	22.2	20.0	16.3	12.5	8.5	4.5	...	...	...	...	...	...	...	...	...	...	B7	A 193
																		L43	A 320
25.0	25.0	...	...	...	...	...	...	...	...	...	...	...	...	...	...	...	...	L7	A 320
25.0	...	...	...	...	...	...	...	...	...	...	...	...	...	...	...	...	...	L7A, L7B, L7C	A 320
25.0	25.0	23.6	21.0	17.0	12.5	8.5	4.5	...	...	...	...	...	...	...	...	...	...	B7	A 193
25.0	25.0	25.0	25.0	23.5	20.5	16.0	11.0	6.3	2.8	...	...	...	...	...	...	...	...	B16	A 193
30.0	...	...	...	...	...	...	...	...	...	...	...	...	...	...	...	...	...	BD	A 354
																		3	A 194
																		4	A 194
...	...	...	...	...	...	...	...	...	...	...	...	...	...	...	...	...	...	7	A 194
																		7M	A 194
																		Stainless Steel	
12.5	12.5	12.5	12.5	10.9	10.8	10.7	10.6	...	...	...	...	...	...	...	...	...	...	B8M Cl. 2	A 193 / A 320
12.5	12.5	12.5	12.5	12.5	12.5	12.5	12.5	...	...	...	...	...	...	...	...	...	...	B8 Cl. 2	A 193 / A 320
13.1	12.9	12.8	12.7	12.6	12.6	12.5	12.5	...	...	...	...	...	...	...	...	...	...	B8C Cl. 2	A 193 / A 320
13.3	12.9	12.7	12.5	12.5	12.5	12.5	12.5	...	...	...	...	...	...	...	...	...	...	B8T Cl. 2	A 193 / A 320
8.9	8.6	8.3	8.0	...	...	...	...	...	...	...	...	...	...	...	...	...	...	B8F Cl. 1	A 320

Copyright ASME International
Provided by IHS under license with ASME
No reproduction or networking permitted without license from IHS
Not for Resale

Table A-2 Design Stress Values for Bolting Materials[1] (Cont'd)

Numbers in Parentheses Refer to Notes for Appendix A Tables; Specifications Are ASTM

Material	Spec. No.	Grade	Size Range, Diam., in.	Notes	Min. Temp., °F (6)	Specified Min. Strength, ksi		Min. Temp.	Stress Values, ksi				
						Tensile	Yield	to 100	200	300	400	500	600
Stainless Steel (Cont'd)													
19Cr–9Ni	A 453	651B	> 3	(15)(35)	−20	95	50						
19Cr–9Ni	A 453	651B	≤ 3	(15)(35)	−20	95	60	19.0	19.0	19.0	19.0	19.0	19.0
19Cr–9Ni	A 453	651A	> 3	(15)(35)	−20	100	60						
19Cr–9Ni	A 453	651A	≤ 3	(15)(35)	−20	100	70	20.0	20.0	20.0	20.0	20.0	20.0
316	A 193 A 320	B8M Cl. 2	> 1, ≤ 1¼	(15)(60)	−325	105	65	18.8	16.2	16.2	16.2	16.2	16.2
347	A 193 A 320	B8C Cl. 2	> 1, ≤ 1¼	(15)(60)	−325	105	65	18.8	17.2	16.0	15.0	14.0	13.4
304	A 193 A 320	B8 Cl. 2	> 1, ≤ 1¼	(15)(60)	−325	105	65	18.8	16.7	16.3	16.3	16.3	16.3
321	A 193 A 320	B8T Cl. 2	> 1, ≤ 1¼	(15)(60)	−325	105	65	18.8	17.8	16.5	16.3	16.3	16.3
321	A 193	B8T Cl. 1	...	(8f)(15)(28)	−325	75	30	18.8	17.8	16.5	15.3	14.3	13.5
304	A 320	B8 Cl. 1	...	(8f)(15)(28)	−425	75	30	18.8	16.7	15.0	13.8	12.9	12.1
347	A 193	B8C Cl. 1	...	(8f)(15)(28)	−425	75	30	18.8	17.9	16.4	15.5	15.0	14.3
316	A 193	B8M Cl. 1	...	(8f)(15)(28)	−325	75	30	18.8	17.7	15.6	14.3	13.3	12.6
316 str. hd.	A 193 A 320	B8M Cl. 2	> ¾, ≤ 1	(15)(60)	−325	100	80	20.0	20.0	20.0	20.0	20.0	20.0
347 str. hd.	A 193 A 320	B8C Cl. 2	> ¾, ≤ 1	(15)(60)	−325	115	80	20.0	17.2	16.0	15.0	14.0	13.4
304 str. hd.	A 193 A 320	B8 Cl. 2	> ¾, ≤ 1	(15)(60)	−325	115	80	20.0	20.0	20.0	20.0	20.0	20.0
321 str. hd.	A 193 A 320	B8T Cl. 2	> ¾, ≤ 1	(15)(60)	−325	115	80	20.0	20.0	20.0	20.0	20.0	20.0

Copyright ASME International
Provided by IHS under license with ASME
No reproduction or networking permitted without license from IHS
Not for Resale

Table A-2 Design Stress Values for Bolting Materials[1] (Cont'd)

Numbers in Parentheses Refer to Notes for Appendix A Tables; Specifications Are ASTM

Design Stress, ksi (1), at Metal Temperature, °F (7)																			
650	700	750	800	850	900	950	1000	1050	1100	1150	1200	1250	1300	1350	1400	1450	1500	Grade	Spec. No.
																		Stainless Steel (Cont'd)	
19.0	19.0	19.0	19.0	19.0	19.0	18.9	18.2	...	...	...	...	...	...	...	...	...	...	651B	A 453
																		651B	A 453
20.0	20.0	20.0	20.0	20.0	20.0	19.8	19.2	...	...	...	...	...	...	...	...	...	...	651A	A 453
																		651A	A 453
16.2	16.2	16.2	16.2	10.9	10.8	10.7	10.6	...	...	...	...	...	...	...	...	...	...	B8M, Cl. 2	A 193
																		B8M, Cl. 2	A 320
13.8	12.9	12.8	12.7	12.6	12.6	12.5	12.5	...	...	...	...	...	...	...	...	...	...	B8C, Cl. 2	A 193
																		B8C, Cl. 2	A 320
16.3	16.3	16.3	16.3	16.3	16.3	16.3	16.3	...	...	...	...	...	...	...	...	...	...	B8, Cl. 2	A 193
																		B8, Cl. 2	A 320
16.3	16.3	16.3	16.3	16.3	16.3	16.3	16.3	...	...	...	...	...	...	...	...	...	...	B8T, Cl. 2	A 193
																		B8T, Cl. 2	A 320
13.3	12.9	12.7	12.5	12.4	12.3	12.1	12.1	9.6	6.9	5.0	3.6	2.5	1.7	1.1	0.7	0.5	0.3	B8T, Cl. 1	A 193
12.0	11.8	11.5	11.2	11.0	10.8	10.6	10.4	10.1	9.8	7.7	6.0	4.7	3.7	2.9	2.3	1.8	1.4	B8, Cl. 1	A 320
14.1	13.8	13.7	13.6	13.5	13.5	13.4	13.4	12.1	9.1	6.1	4.4	3.3	2.2	1.5	1.2	0.9	0.8	B8C, Cl. 1	A 193
12.3	12.1	11.9	11.7	11.6	11.5	11.4	11.3	11.2	11.0	9.8	7.4	5.5	4.1	3.1	2.3	1.7	1.3	B8M, Cl. 1	A 193
20.0	20.0	20.0	20.0	10.9	10.8	10.7	10.6	...	...	...	...	...	...	...	...	...	...	B8M, Cl. 2	A 193
																		B8M, Cl. 2	A 320
13.1	12.9	12.8	12.7	12.6	12.6	12.5	12.5	...	...	...	...	...	...	...	...	...	...	B8C, Cl. 2	A 193
																		B8C, Cl. 2	A 320
20.0	20.0	20.0	20.0	20.0	20.0	20.0	20.0	...	...	...	...	...	...	...	...	...	...	B8, Cl. 2	A 193
																		B8, Cl. 2	A 320
20.0	20.0	20.0	20.0	20.0	20.0	20.0	20.0	...	...	...	...	...	...	...	...	...	...	B8T, Cl. 2	A 193
																		B8T, Cl. 2	A 320

Copyright ASME International
Provided by IHS under license with ASME
No reproduction or networking permitted without license from IHS
Not for Resale

Table A-2 Design Stress Values for Bolting Materials[1] (Cont'd)

Numbers in Parentheses Refer to Notes for Appendix A Tables; Specifications Are ASTM

Material	Spec. No.	Grade	Size Range, Diam., in.	Notes	Min. Temp., °F (6)	Specified Min. Strength, ksi		Min. Temp. to 100	200	300	400	500	600
						Tensile	Yield						
Stainless Steel (Cont'd)													
12Cr	A 437	B4C	...	(35)	−20	115	85	21.2	21.2	21.2	21.2	21.2	21.2
13Cr	A 193	B6	≤ 4	(15)(35)	−20	110	85	21.2	21.2	21.2	21.2	21.2	21.2
14Cr–24Ni	A 453	660A/B	...	(15)(35)	−20	130	85	21.3	20.7	20.5	20.4	20.3	20.2
316 str. hd.	A 193 / A 320	B8M Cl. 2	≤ 3/4	(15)(60)	−325	110	95	22.0	22.0	22.0	22.0	22.0	22.0
347	A 193 / A 320	B8C Cl. 2	≤ 3/4	(15)(60)	−325	125	100	25.0	25.0	25.0	25.0	25.0	25.0
304	A 193 / A 320	B8 Cl. 2	≤ 3/4	(15)(60)	−325	125	100	25.0	17.2	16.0	15.0	14.0	13.4
321	A 193 / A 320	B8T Cl. 2	≤ 3/4	(15)(60)	−325	125	100	25.0	25.0	25.0	25.0	25.0	25.0
12Cr	A 437	B4B	...	(35)	−20	145	105	26.2	26.2	26.2	26.2	26.2	26.2
12Cr nuts	A 194	6	...	(35)(42)	−20	...	...	...	...	...	...	...	...
303 nuts	A 194	8FA	...	(42)	−20	...	...	...	...	...	...	...	...
316 nuts	A 194	8MA	...	(42)	−325	...	...	...	...	...	...	...	...
321 nuts	A 194	8TA	...	(42)	−325	...	...	...	...	...	...	...	...
304 nuts	A 194	8	...	(42)	−425	...	...	...	...	...	...	...	...
304 nuts	A 194	8A	...	(42)	−425	...	...	...	...	...	...	...	...
347 nuts	A 194	8CA	...	(42)	−425	...	...	...	...	...	...	...	...

Copyright ASME International
Provided by IHS under license with ASME
No reproduction or networking permitted without license from IHS
Not for Resale

Table A-2 Design Stress Values for Bolting Materials[1] (Cont'd)

Numbers in Parentheses Refer to Notes for Appendix A Tables; Specifications Are ASTM

Design Stress, ksi (1), at Metal Temperature, °F (7)																			
650	700	750	800	850	900	950	1000	1050	1100	1150	1200	1250	1300	1350	1400	1450	1500	Grade	Spec. No.
																		Stainless Steel (Cont'd)	
21.2	21.2	...	...	...	...	...	...	...	...	...	...	...	...	...	...	...	...	B4C	A 437
21.2	21.2	21.2	19.6	15.6	12.0	...	...	...	...	...	...	...	...	...	...	...	...	B6	A 193
20.2	20.1	20.0	19.9	19.9	19.9	19.8	19.8	...	...	...	...	...	...	...	...	...	...	660A/B	A 453
22.0	22.0	22.0	22.0	10.9	10.8	10.7	10.6	...	...	...	...	...	...	...	...	...	...	B8M Cl. 2	A 193 A 320
25.0	25.0	25.0	25.0	25.0	25.0	25.0	25.0	...	...	...	...	...	...	...	...	...	...	B8 Cl. 2	A 193 A 320
13.1	11.0	10.8	10.5	10.3	10.1	9.9	9.7	...	...	...	...	...	...	...	...	...	...	B8 Cl. 2	A 193 A 320
25.0	25.0	25.0	25.0	25.0	25.0	25.0	25.0	...	...	...	...	...	...	...	...	...	...	B8T Cl. 2	A 193 A 320
26.2	26.2	...	...	...	...	...	...	...	...	...	...	...	...	...	...	...	...	B4B	A 437
...	...	...	...	...	...	...	...	...	...	...	...	...	...	...	...	...	...	6	A 194
...	...	...	...	...	...	...	...	...	...	...	...	...	...	...	...	...	...	8FA	A 194
...	...	...	...	...	...	...	...	...	...	...	...	...	...	...	...	...	...	8MA 8TA	A 194 A 194
...	...	...	...	...	...	...	...	...	...	...	...	...	...	...	...	...	...	8 8A 8CA	A 194 A 194 A 194

Copyright ASME International
Provided by IHS under license with ASME
No reproduction or networking permitted without license from IHS
Not for Resale

Table A-2 Design Stress Values for Bolting Materials[1] (Cont'd)

Numbers in Parentheses Refer to Notes for Appendix A Tables; Specifications Are ASTM

Material	Spec. No.	UNS No. or Grade	Temper	Size Range, Diam., in.	Notes	Min. Temp., °F (6)	Specified Min. Strength, ksi		Min. Temp. to			
							Tensile	Yield	100	200	300	400
Copper and Copper Alloy												
Naval brass	B 21	C46400, C48200, C48500	O60	...	(8f)	−325	50	20	5.0	4.8	4.2	...
Cu	B 187	C10200, C11000, C12000, C12200	O60	...	(8f)	−325	30	10	6.7	5.5	5.1	...
Cu–Si	B 98	C65100	O60	...	(8f)(52)	−325	40	12	8.0	8.0	7.9	...
Cu–Si	B 98	C65500, C66100	O60	...	(8f)(52)	−325	52	15				
Cu–Si	B 98	C65500, C66100	H01	...	(8f)	−325	55	24				
Cu–Si	B 98	C65500, C66100	H02	≤ 2	...	−325	70	38	10.0	10.0	10.0	...
Cu–Si	B 98	C65100	H06	> 1, ≤ 1½	...	−325	75	40				
Cu–Si	B 98	C65100	H06	>½, ≤ 1	...	−325	75	45	11.3	11.3	11.3	...
Cu–Si	B 98	C65100	H06	≤ ½	...	−325	85	55	13.7	13.7	13.7	...
Al–Si–bronze	B 150	C64200	HR50	> 1, ≤ 2	...	−325	80	42				
Al–Si–bronze	B 150	C64200	HR50	> ½, ≤ 1	...	−325	85	42	16.7	14.0	13.5	11.0
Al–Si–bronze	B 150	C64200	HR50	≤ ½	...	−325	90	42				
Al–bronze	B 150	C61400	HR50	> 1, ≤ 2	...	−325	70	32				
Al–bronze	B 150	C61400	HR50	> ½, ≤ 1	...	−325	75	35	17.5	17.5	17.5	17.5
Al–bronze	B 150	C61400	HR50	≤ ½	...	−325	80	40				
Al–bronze	B 150	C6300	HR50	> 2, ≤ 3								
Al–bronze	B 150	C6300	M20	> 3, ≤ 4	...	−325	85	42.5				
Al–bronze	B 150	C6300	HR50	> 1, ≤ 2	...	−325	90	45	20.0	20.0	20.0	20.0
Al–bronze	B 150	C6300	HR50	> ½, ≤ 1	...	−325	100	50				
Nickel and Nickel Alloy												
Low C–Ni	B 160	N02201	Ann. hot fin.	...	(8f)	−325	50	10	6.7	6.4	6.3	6.2
Ni	B 160	N02200	Hot fin.	...	(8f)	−325	60	15	10.0	10.0	10.0	10.0
Ni	B 160	N02200	Annealed	...	(8f)	−325	55	15				
Ni	B 160	N02200	Cold drawn	...	...	−325	65	40	10.0	10.0	10.0	10.0
Ni–Cu	B 164	N04400	C.D./str. rel.	...	(54)	−325	84	50				
Ni–Cu	B 164	N04405	Cold drawn	...	(54)	−325	85	50	12.5	12.5	12.5	12.5
Ni–Cu	B 164	N04400	Cold drawn	...	(54)	−325	85	55	13.7	13.7	13.7	13.7
Ni–Cu	B 164	N04400/N04405	Annealed	...	(8f)	−325	70	25	16.6	14.6	13.6	13.2
Ni–Cu	B 164	N04405	Hot fin.	Rod ≤ 3	...	−325	75	35	18.7	18.7	18.7	18.7
Ni–Cu	B 164	N04400	Hot fin.	2⅛ ≤ hex. ≤ 4	(8f)	−325	75	30	18.7	18.7	18.7	18.7
Ni–Cu	B 164	N04400	Hot fin.	All except hex. > 2⅛	...	−325	80	40	20.0	20.0	20.0	20.0

Symbols in Temper Column

O60 = soft anneal
H01 = quarter-hard
H02 = half-hard
H06 = extra hard
HR50 = drawn, stress-relieved

Copyright ASME International
Provided by IHS under license with ASME
No reproduction or networking permitted without license from IHS
Not for Resale

Table A-2 Design Stress Values for Bolting Materials[1] (Cont'd)

Numbers in Parentheses Refer to Notes for Appendix A Tables; Specifications Are ASTM

Design Stress, ksi (1), at Metal Temperature, °F (7)																UNS No. or Grade	Spec. No.
500	600	650	700	750	800	850	900	950	1000	1050	1100	1150	1200	1250	1300		
																Copper and Copper Alloy	
...	...	...	...	...	...	...	...	...	...	...	...	...	...	...	...	C46400, etc.	B 21
...	...	...	...	...	...	...	...	...	...	...	...	...	...	...	...	C10200, etc.	B 187
...	...	...	...	...	...	...	...	...	...	...	...	...	...	...	...	C65100	B 98
																C65500, etc.	B 98
																C65500, etc.	B 98
...	...	...	...	...	...	...	...	...	...	...	...	...	...	...	...	C65500, etc.	B 98
																C65100	B 98
...	...	...	...	...	...	...	...	...	...	...	...	...	...	...	...	C65100	B 98
...	...	...	...	...	...	...	...	...	...	...	...	...	...	...	...	C65100	B 98
																C64200	B 150
5.2	1.7	...	...	...	...	...	...	...	...	...	...	...	...	...	...	C64200	B 150
																C64200	B 150
																C61400	B 150
16.8	...	...	...	...	...	...	...	...	...	...	...	...	...	...	...	C61400	B 150
																C61400	B 150
																C63000	B 150
																C63000	B 150
19.4	12.0	8.5	6.0	...	...	...	...	...	...	...	...	...	...	...	...	C63000	B 150
																C63000	B 150
																Nickel and Nickel Alloy	
6.2	6.2	6.2	6.2	6.0	5.9	5.8	4.8	3.7	3.0	2.4	2.0	1.5	1.2	...	...	N02201	B 160
9.5	8.3	...	...	...	...	...	...	...	...	...	...	...	...	...	...	N02200	B 160
																N02200	B 160
10.0	10.0	...	...	...	...	...	...	...	...	...	...	...	...	...	...	N02200	B 160
																N04400	B 164
12.5	...	...	...	...	...	...	...	...	...	...	...	...	...	...	...	N04405	B 164
13.7	...	...	...	...	...	...	...	...	...	...	...	...	...	...	...	N04400	B 164
13.1	13.1	13.1	13.1	13.0	12.7	11.0	8.0	...	...	...	...	...	...	...	...	N04400, etc.	B 164
18.7	18.7	18.7	18.0	17.2	14.5	8.5	4.0	...	...	...	...	...	...	...	...	N04405	B 164
17.8	17.4	17.2	17.0	16.8	14.5	8.5	4.0	...	...	...	...	...	...	...	...	N04400	B 164
20.0	20.0	20.0	19.2	18.5	14.5	8.5	4.0	...	...	...	...	...	...	...	...	N04400	B 164

Copyright ASME International
Provided by IHS under license with ASME
No reproduction or networking permitted without license from IHS
Not for Resale

Table A-2 Design Stress Values for Bolting Materials[1] (Cont'd)

Numbers in Parentheses Refer to Notes for Appendix A Tables; Specifications Are ASTM

Material	Spec. No.	UNS No. or Grade	Temper	Size Range, Diam., in.	Notes	Min. Temp., °F (6)	Specified Min. Strength, ksi		Min. Temp. to			
							Tensile	Yield	100	200	300	400
Nickel and Nickel Alloy (Cont'd)												
Ni–Cr–Fe	B 166	N06600	Cold drawn	Rod ≤ 3	(41)(54)	−325	105	80	10.0	9.5	9.2	9.1
Ni–Cr–Fe	B 166	N06600	Hot fin.	Rod ≤ 3	...	−325	90	40	10.0	9.5	9.2	9.1
Ni–Cr–Fe	B 166	N06600	Annealed	...	...	−325	80	35	20.0	20.0	20.0	20.0
Ni–Cr–Fe	B 166	N06600	Hot fin.	Rod > 3	...	−325	85	35	21.2	21.2	21.2	21.2
Ni–Mo	B 335	N10001	Annealed	...	...	−325	100	46	25.0	25.0	25.0	24.7
Ni–Mo–Cr	B 574	N10276	Sol. ann.	...	...	−325	100	41	25.0	25.0	25.0	21.2
Aluminum Alloy												
...	B 211	6061	T6, T651 wld.	≥ 1/8, ≤ 8	(8f)(43)(63)	−452	24	...	4.8	4.8	4.8	3.5
...	B 211	6061	T6, T651	≥ 1/8, ≤ 8	(43)(63)	−452	42	35	8.4	8.4	8.4	4.4
...	B 211	2024	T4	> 6 1/2, ≤ 8	(43)(63)	−452	58	38	9.5	9.5	9.5	4.2
...	B 211	2024	T4	> 4 1/2, ≤ 6 1/2	(43)(63)	−452	62	40	10.0	10.0	10.0	4.5
...	B 211	2024	T4	≥ 1/2, ≤ 4 1/2	(43)(63)	−452	62	42	10.5	10.5	10.4	4.5
...	B 211	2024	T4	≥ 1/8, < 1/2	(43)(63)	−452	62	45	11.3	11.3	10.4	4.5
...	B 211	2014	T6, T651	≥ 1/8, ≤ 8	(43)(63)	−452	65	55	13.0	13.0	11.4	3.9

Copyright ASME International
Provided by IHS under license with ASME
No reproduction or networking permitted without license from IHS
Not for Resale

Table A-2 Design Stress Values for Bolting Materials[1] (Cont'd)

Numbers in Parentheses Refer to Notes for Appendix A Tables; Specifications Are ASTM

Design Stress, ksi (1), at Metal Temperature, °F (7)																	
500	600	650	700	750	800	850	900	950	1000	1050	1100	1150	1200	1250	1300	UNS No. or Grade	Spec. No.
																Nickel and Nickel Alloy (Cont'd)	
9.1	...	...	...	...	...	...	...	...	...	...	...	...	...	...	...	N06600	B 166
9.1	9.1	9.0	8.9	8.9	8.8	8.7	8.6	8.5	8.3	7.8	7.3	6.4	5.5	...	...	N06600	B 166
20.0	20.0	19.8	19.6	19.4	19.1	18.7	16.0	10.6	7.0	4.5	3.0	2.2	2.2	...	...	N06600	B 166
21.2	21.2	21.1	21.1	21.0	20.4	20.2	19.5	19.3	14.5	10.3	7.3	5.8	5.5	...	...	N06600	B 166
24.3	23.7	23.4	23.0	22.8	22.5	...	...	...	...	...	...	...	...	...	...	N10001	B 335
20.0	18.8	18.3	17.8	17.4	17.1	16.8	16.6	16.5	16.5	...	...	...	...	...	...	N10276	B 574
																Aluminum Alloy	
...	...	...	...	...	...	...	...	...	...	...	...	...	...	...	...	6061	B 211
...	...	...	...	...	...	...	...	...	...	...	...	...	...	...	...	6061	B 211
...	...	...	...	...	...	...	...	...	...	...	...	...	...	...	...	2024	B 211
...	...	...	...	...	...	...	...	...	...	...	...	...	...	...	...	2024	B 211
...	...	...	...	...	...	...	...	...	...	...	...	...	...	...	...	2024	B 211
...	...	...	...	...	...	...	...	...	...	...	...	...	...	...	...	2024	B 211
...	...	...	...	...	...	...	...	...	...	...	...	...	...	...	...	2014	B 211

Copyright ASME International
Provided by IHS under license with ASME
No reproduction or networking permitted without license from IHS
Not for Resale

APPENDIX B
STRESS TABLES AND ALLOWABLE PRESSURE TABLES FOR NONMETALS

The data and Notes in Appendix B are requirements of this Code.

Copyright ASME International
Provided by IHS under license with ASME
No reproduction or networking permitted without license from IHS
Not for Resale

Specification Index for Appendix B

Spec. No.	Title [Note (1)]
ASTM	
C 361	Reinforced Concrete Low-Head Pressure Pipe
C 582	Contact-Molded Reinforced Thermosetting Plastic (RTP) Laminates for Corrosion Resistant Equipment
C 599	Process Glass Pipe and Fittings
D 1785	PVC Plastic Pipe, Schedules 40, 80 and 120
D 2104	PE Plastic Pipe, Schedule 40
D 2239	PE Plastic Pipe (SIDR-PR) Based on Controlled Inside Diameter
D 2241	PVC Plastic Pressure-Rated Pipe (SDR Series)
D 2447	PE Plastic Pipe, Schedules 40 and 80, Based on Outside Diameter
D 2513	Thermoplastic Gas Pressure Pipe, Tubing and Fittings
D 2517	Reinforced Epoxy Resin Gas Pressure Pipe and Fittings
D 2662	PB Plastic Pipe (SDR-PR)
D 2666	PB Plastic Tubing
D 2672	Bell-End PVC Pipe
D 2737	PE Plastic Tubing
D 2846	CPVC Plastic Hot- and Cold-Water Distribution Systems
D 2996	Filament-Wound Fiberglass RTR Pipe [Note (2)]
D 2997	Centrifugally Cast RIR Pipe
D 3000	PB Plastic Pipe (SDR-PR), Based on Outside Diameter
D 3035	PE Plastic Pipe (SDR-PR), Based on Controlled Outside Diameter
D 3309	PB Plastic Hot-Water Distribution Systems
D 3517	Fiberglass RTR Pressure Pipe [Note (2)]
D 3754	Fiberglass RTR Sewer and Industrial Pressure Pipe [Note (2)]
F 441	CPVC Plastic Pipe
F 442	CPVC Plastic Pipe (SDR-PR)
AWWA	
C300	Reinforced Concrete Pressure Pipe, Steel Cylinder Type, for Water and Other Liquids
C301	Prestressed Concrete Pressure, Pipe Steel Cylinder Type, for Water and Other Liquids
C302	Reinforced Concrete Pressure Pipe, Steel Non-Cylinder Type, for Water and Other Liquids
C950	Glass-Fiber-Reinforced Thermosetting-Resin Pressure Pipe

GENERAL NOTE: It is not practical to refer to a specific edition of each standard throughout the Code text. Instead, the approved edition references, along with the names and addresses of the sponsoring organizations, are shown in Appendix E.

NOTES:

(1) For names of plastics identified only by abbreviation, see para. A326.3.

(2) The term *fiberglass RTR* takes the place of the ASTM designation "*fiberglass" (glass-fiber-reinforced thermosetting resin)*.

Copyright ASME International
Provided by IHS under license with ASME
No reproduction or networking permitted without license from IHS
Not for Resale

NOTES FOR APPENDIX B TABLES

NOTES:

(1) These recommended limits are for low pressure applications with water and other fluids that do not significantly affect the properties of the thermoplastic. The upper temperature limits are reduced at higher pressures, depending on the combination of fluid and expected service life. Lower temperature limits are affected more by the environment, safeguarding, and installation conditions than by strength.

(2) These recommended limits apply only to materials listed. Manufacturers should be consulted for temperature limits on specific types and kinds of materials not listed.

(3) Use these hydrostatic design stress (HDS) values at all lower temperatures.

(4) Mean short term burst stresses are based on values listed in applicable ASTM Specifications, excluding the lower confidence limit multiplier of 0.85 applied to the mean stress value.

(5) The intent of listing in this Table is to include all the types, grades, classes, and hydrostatic design bases in the listed specifications.

Copyright ASME International
Provided by IHS under license with ASME
No reproduction or networking permitted without license from IHS
Not for Resale

Table B-1 Hydrostatic Design Stresses (HDS) and Recommended Temperature Limits for Thermoplastic Pipe

ASTM Spec. No.	Material	Recommended Temperature Limits [Notes (1), (2)]				Hydrostatic Design Stress at						Mean Short-Term Burst Stress at 23°C [Note (4)]	
		Minimum		Maximum		23°C [Note (3)]	73°F [Note (3)]	38°C	100°F	82°C	180°F		
		°C	°F	°C	°F	MPa	ksi	MPa	ksi	MPa	ksi	MPa	ksi
...	ABS55535	−40	−40	80	176	...	...	...	...	...	...	...	...
...	AP	−18	0	77	170	...	...	...	...	...	...	...	...
D 2846 F 441 F 442	CPVC4120	−18	0	99	210	13.8	2.0	11.0	1.6	3.4	0.5	51.9	7.53
...	ECTFE	−40	−40	149	300	...	...	...	...	...	...	...	...
...	ETFE	−40	−40	149	300	...	...	...	...	...	...	...	...
D 2513 D 2662 D 2666 D 3000 D 3309	PB2110	−18	0	99	210	6.9	1.0	5.5	0.8	3.4	0.5	17.9	2.59
D 2104 D 2239 D 2447 D 2513 D 2737 D 3035	PE3408	−34	−30	82	180	5.51	0.80	3.4	0.5	...	...	20.4	2.96
...	PEEK	−40	−40	250	450	...	...	...	...	...	...	...	...
...	PFA	−40	−40	250	450	...	...	...	...	...	...	...	...
...	POP2125	−1	30	99	210	...	...	...	...	...	...	...	...
...	PP	−1	30	99	210	...	...	...	...	...	...	...	...
D 1785	PVC1120	−18	0	66	150	13.8	2.0	11.0	1.6	...	...	51.9	7.53
D 2241	PVC1220	−18	0	66	150	13.8	2.0	11.0	1.6	...	...	51.9	7.53
D 2513	PVC2110	−18	0	54	130	6.9	1.0	5.5	0.8	...	...	40.5	5.88
D 2672	PVC2120	−18	0	66	150	13.8	2.0	11.0	1.6	...	...	51.9	7.53
...	PVDC	4	40	71	160	...	...	...	...	...	...	...	...
...	PVDF	−18	0	135	275	...	...	...	...	...	...	...	...

Table B-2 Listed Specifications for Laminated Reinforced Thermosetting Resin Pipe[5]

Spec. No.
ASTM C 582

Copyright ASME International
Provided by IHS under license with ASME
No reproduction or networking permitted without license from IHS
Not for Resale

Table B-3 Listed Specifications for Filament Wound and Centrifugally Cast Reinforced Thermosetting Resin and Reinforced Plastic Mortar Pipe[5]

Spec. Nos. (ASTM Except as Noted)		
D 2517	D 2997	D 3754
D 2996	D 3517	AWWA C950

Table B-4 Allowable Pressures and Recommended Temperature Limits for Concrete Pipe

Spec. No.	Material	Class	Allowable Gage Pressure kPa	Allowable Gage Pressure psi	Recommended Temperature Limits [Note (2)] Minimum °C	Minimum °F	Maximum °C	Maximum °F
ASTM C 361	Reinforced concrete	25	69	10	...	...	...	...
		50	138	20				
		75	205	30				
		100	275	40				
		125	345	50				
AWWA C300	Reinforced concrete	...	1795	260	...	...	...	...
AWWA C301	Reinforced concrete	Lined cylinder	1725	250	...	...	...	...
AWWA C301	Reinforced concrete	Embedded cylinder	2415	350	...	...	...	...
AWWA C302	Reinforced concrete	...	310	45	...	...	...	...

Table B-5 Allowable Pressures and Recommended Temperature Limits for Borosilicate Glass Pipe

ASTM Spec. No.	Material	Size Range DN	Size Range NPS	Allowable Gage Pressure kPa	Allowable Gage Pressure psi	Recommended Temperature Limits [Note (2)] Minimum °C	Minimum °F	Maximum °C	Maximum °F
C 599	Borosilicate glass	8–15	1/4–1/2	690	100	...	...	232	450
		20	3/4	515	75				
		25–80	1–3	345	50				
		100	4	240	35				
		150	6	138	20				

Copyright ASME International
Provided by IHS under license with ASME
No reproduction or networking permitted without license from IHS
Not for Resale

APPENDIX C
PHYSICAL PROPERTIES OF PIPING MATERIALS

Copyright ASME International
Provided by IHS under license with ASME
No reproduction or networking permitted without license from IHS
Not for Resale

--`,,```,,,,````-`-`,,`,,`,`,,`---

Copyright ASME International
Provided by IHS under license with ASME
No reproduction or networking permitted without license from IHS

Not for Resale

NOTES FOR APPENDIX C TABLES

GENERAL NOTE: Tables C-2, C-4, and C-7 containing data in SI units are not included at this time. To convert data in U.S. customary units to SI metric units:

(a) determine the Fahrenheit equivalent of the given Celsius temperature;

(b) interpolate in the desired table to calculate the expansion or modulus value in U.S. units;

(c)(1) for Table C-1, multiply the value (in./100 ft) by 0.833 to obtain the total linear thermal expansion (mm/m) between 21°C and the given temperature;

(2) for Table C-3, multiply the value (μin./in.-°F) by 1.80 to obtain the mean coefficient of linear thermal expansion (μm/m-°C) between 21°C and the given temperature;

(3) for Table C-6, multiply the value in Msi by 6.895 to obtain the modulus of elasticity in MPa at the given temperature.

--`,,```,,,,````-`-`,,`,,`,`,,`---

Copyright ASME International
Provided by IHS under license with ASME
No reproduction or networking permitted without license from IHS
Not for Resale

Table C-1 Total Thermal Expansion, U.S. Units, for Metals

Total Linear Thermal Expansion Between 70°F and Indicated Temperature, in./100 ft

Temp., °F	Material							
	Carbon Steel Carbon–Moly–Low-Chrome (Through 3Cr–Mo)	5Cr–Mo Through 9Cr–Mo	Austenitic Stainless Steels 18Cr–8Ni	12Cr, 17Cr, 27Cr	25Cr–20Ni	UNS N04400 Monel 67Ni–30Cu	$3^1/_2$Ni	Copper and Copper Alloys
−450	...	...	...	...	...	...	...	−3.93
−425	...	...	...	...	...	...	...	−3.93
−400	...	...	...	...	...	...	...	−3.91
−375	...	...	...	...	...	...	...	−3.87
−350	...	...	...	...	...	...	...	−3.79
−325	−2.37	−2.22	−3.85	−2.04	...	−2.62	−2.25	−3.67
−300	−2.24	−2.10	−3.63	−1.92	...	−2.50	−2.17	−3.53
−275	−2.11	−1.98	−3.41	−1.80	...	−2.38	−2.07	−3.36
−250	−1.98	−1.86	−3.19	−1.68	...	−2.26	−1.96	−3.17
−225	−1.85	−1.74	−2.96	−1.57	...	−2.14	−1.86	−2.97
−200	−1.71	−1.62	−2.73	−1.46	...	−2.02	−1.76	−2.76
−175	−1.58	−1.50	−2.50	−1.35	...	−1.90	−1.62	−2.53
−150	−1.45	−1.37	−2.27	−1.24	...	−1.79	−1.48	−2.30
−125	−1.30	−1.23	−2.01	−1.11	...	−1.59	−1.33	−2.06
−100	−1.15	−1.08	−1.75	−0.98	...	−1.38	−1.17	−1.81
−75	−1.00	−0.94	−1.50	−0.85	...	−1.18	−1.01	−1.56
−50	−0.84	−0.79	−1.24	−0.72	...	−0.98	−0.84	−1.30
−25	−0.68	−0.63	−0.98	−0.57	...	−0.77	−0.67	−1.04
0	−0.49	−0.46	−0.72	−0.42	...	−0.57	−0.50	−0.77
25	−0.32	−0.30	−0.46	−0.27	...	−0.37	−0.32	−0.50
50	−0.14	−0.13	−0.21	−0.12	...	−0.20	−0.15	−0.22
70	0	0	0	0	0	0	0	0
100	0.23	0.22	0.34	0.20	0.32	0.28	0.23	0.34
125	0.42	0.40	0.62	0.36	0.58	0.52	0.42	0.63
150	0.61	0.58	0.90	0.53	0.84	0.75	0.61	0.91
175	0.80	0.76	1.18	0.69	1.10	0.99	0.81	1.20
200	0.99	0.94	1.46	0.86	1.37	1.22	1.01	1.49
225	1.21	1.13	1.75	1.03	1.64	1.46	1.21	1.79
250	1.40	1.33	2.03	1.21	1.91	1.71	1.42	2.09
275	1.61	1.52	2.32	1.38	2.18	1.96	1.63	2.38
300	1.82	1.71	2.61	1.56	2.45	2.21	1.84	2.68
325	2.04	1.90	2.90	1.74	2.72	2.44	2.05	2.99
350	2.26	2.10	3.20	1.93	2.99	2.68	2.26	3.29
375	2.48	2.30	3.50	2.11	3.26	2.91	2.47	3.59
400	2.70	2.50	3.80	2.30	3.53	3.25	2.69	3.90
425	2.93	2.72	4.10	2.50	3.80	3.52	2.91	4.21
450	3.16	2.93	4.41	2.69	4.07	3.79	3.13	4.51
475	3.39	3.14	4.71	2.89	4.34	4.06	3.35	4.82
500	3.62	3.35	5.01	3.08	4.61	4.33	3.58	5.14
525	3.86	3.58	5.31	3.28	4.88	4.61	3.81	5.45
550	4.11	3.80	5.62	3.49	5.15	4.90	4.04	5.76

Copyright ASME International
Provided by IHS under license with ASME
No reproduction or networking permitted without license from IHS
Not for Resale

Table C-1 Total Thermal Expansion, U.S. Units, for Metal

Total Linear Thermal Expansion Between 70°F and Indicated Temperature, in./100 ft

Material								
Aluminum	Gray Cast Iron	Bronze	Brass	70Cu–30Ni	UNS N08XXX Series Ni–Fe–Cr	UNS N06XXX Series Ni–Cr–Fe	Ductile Iron	Temp., °F
...	...	...	...	...	...	...	...	–450
...	...	...	...	...	...	...	...	–425
...	...	...	...	...	...	...	...	–400
...	...	...	...	...	...	...	...	–375
...	...	...	...	...	...	...	...	–350
–4.68	...	–3.98	–3.88	–3.15	...	...	...	–325
–4.46	...	–3.74	–3.64	–2.87	...	...	...	–300
–4.21	...	–3.50	–3.40	–2.70	...	...	...	–275
–3.97	...	–3.26	–3.16	–2.53	...	...	...	–250
–3.71	...	–3.02	–2.93	–2.36	...	...	...	–225
–3.44	...	–2.78	–2.70	–2.19	...	...	–1.51	–200
–3.16	...	–2.54	–2.47	–2.12	...	...	–1.41	–175
–2.88	...	–2.31	–2.24	–1.95	...	...	–1.29	–150
–2.57	...	–2.06	–2.00	–1.74	...	...	–1.16	–125
–2.27	...	–1.81	–1.76	–1.53	...	...	–1.04	–100
–1.97	...	–1.56	–1.52	–1.33	...	...	–0.91	–75
–1.67	...	–1.32	–1.29	–1.13	...	...	–0.77	–50
–1.32	...	–1.25	–1.02	–0.89	...	...	–0.62	–25
–0.97	...	–0.77	–0.75	–0.66	...	...	–0.46	0
–0.63	...	–0.49	–0.48	–0.42	...	...	–0.23	25
–0.28	...	–0.22	–0.21	–0.19	...	...	–0.14	50
0	0	0	0	0	0	0	0	70
0.46	0.21	0.36	0.35	0.31	0.28	0.26	0.21	100
0.85	0.38	0.66	0.64	0.56	0.52	0.48	0.39	125
1.23	0.55	0.96	0.94	0.82	0.76	0.70	0.57	150
1.62	0.73	1.26	1.23	1.07	0.99	0.92	0.76	175
2.00	0.90	1.56	1.52	1.33	1.23	1.15	0.94	200
2.41	1.08	1.86	1.83	1.59	1.49	1.38	1.13	225
2.83	1.27	2.17	2.14	1.86	1.76	1.61	1.33	250
3.24	1.45	2.48	2.45	2.13	2.03	1.85	1.53	275
3.67	1.64	2.79	2.76	2.40	2.30	2.09	1.72	300
4.09	1.83	3.11	3.08	2.68	2.59	2.32	1.93	325
4.52	2.03	3.42	3.41	2.96	2.88	2.56	2.13	350
4.95	2.22	3.74	3.73	3.24	3.18	2.80	2.36	375
5.39	2.42	4.05	4.05	3.52	3.48	3.05	2.56	400
5.83	2.62	4.37	4.38	...	3.76	3.29	2.79	425
6.28	2.83	4.69	4.72	...	4.04	3.53	3.04	450
6.72	3.03	5.01	5.06	...	4.31	3.78	3.28	475
7.17	3.24	5.33	5.40	...	4.59	4.02	3.54	500
7.63	3.46	5.65	5.75	...	4.87	4.27	3.76	525
8.10	3.67	5.98	6.10	...	5.16	4.52	3.99	550

Copyright ASME International
Provided by IHS under license with ASME
No reproduction or networking permitted without license from IHS
Not for Resale

Table C-1 Total Thermal Expansion, U.S. Units, for Metals (Cont'd)

Total Linear Thermal Expansion Between 70°F and Indicated Temperature, in./100 ft

	Material							
Temp., °F	Carbon Steel Carbon–Moly–Low-Chrome (Through 3Cr–Mo)	5Cr–Mo Through 9Cr–Mo	Austenitic Stainless Steels 18Cr–8Ni	12Cr, 17Cr, 27Cr	25Cr–20Ni	UNS N04400 Monel 67Ni–30Cu	$3^1/_2$Ni	Copper and Copper Alloys
575	4.35	4.02	5.93	3.69	5.42	5.18	4.27	6.07
600	4.60	4.24	6.24	3.90	5.69	5.46	4.50	6.09
625	4.86	4.47	6.55	4.10	5.96	5.75	4.74	...
650	5.11	4.69	6.87	4.31	6.23	6.05	4.98	...
675	5.37	4.92	7.18	4.52	6.50	6.34	5.22	...
700	5.63	5.14	7.50	4.73	6.77	6.64	5.46	...
725	5.90	5.38	7.82	4.94	7.04	6.94	5.70	...
750	6.16	5.62	8.15	5.16	7.31	7.25	5.94	...
775	6.43	5.86	8.47	5.38	7.58	7.55	6.18	...
800	6.70	6.10	8.80	5.60	7.85	7.85	6.43	...
825	6.97	6.34	9.13	5.82	8.15	8.16	6.68	...
850	7.25	6.59	9.46	6.05	8.45	8.48	6.93	...
875	7.53	6.83	9.79	6.27	8.75	8.80	7.18	...
900	7.81	7.07	10.12	6.49	9.05	9.12	7.43	...
925	8.08	7.31	10.46	6.71	9.35	9.44	7.68	...
950	8.35	7.56	10.80	6.94	9.65	9.77	7.93	...
975	8.62	7.81	11.14	7.17	9.95	10.09	8.17	...
1000	8.89	8.06	11.48	7.40	10.25	10.42	8.41	...
1025	9.17	8.30	11.82	7.62	10.55	10.75	...	...
1050	9.46	8.55	12.16	7.95	10.85	11.09	...	...
1075	9.75	8.80	12.50	8.18	11.15	11.43	...	...
1100	10.04	9.05	12.84	8.31	11.45	11.77	...	...
1125	10.31	9.28	13.18	8.53	11.78	12.11	...	...
1150	10.57	9.52	13.52	8.76	12.11	12.47	...	...
1175	10.83	9.76	13.86	8.98	12.44	12.81	...	...
1200	11.10	10.00	14.20	9.20	12.77	13.15	...	...
1225	11.38	10.26	14.54	9.42	13.10	13.50	...	...
1250	11.66	10.53	14.88	9.65	13.43	13.86	...	...
1275	11.94	10.79	15.22	9.88	13.76	14.22	...	...
1300	12.22	11.06	15.56	10.11	14.09	14.58	...	...
1325	12.50	11.30	15.90	10.33	14.39	14.94	...	...
1350	12.78	11.55	16.24	10.56	14.69	15.30	...	...
1375	13.06	11.80	16.58	10.78	14.99	15.66	...	...
1400	13.34	12.05	16.92	11.01	15.29	16.02	...	...
1425	...	...	17.30	...	...	...	...	...
1450	...	...	17.69	...	...	...	...	...
1475	...	...	18.08	...	...	...	...	...
1500	...	...	18.47	...	...	...	...	...

GENERAL NOTE: For Code references to this Appendix, see para. 319.3.1. These data are for use in the absence of more applicable data. It is the designer's responsibility to verify that materials are suitable for the intended service at the temperatures shown.

Copyright ASME International
Provided by IHS under license with ASME
No reproduction or networking permitted without license from IHS Not for Resale

Table C-1 Total Thermal Expansion, U.S. Units, for Metals (Cont'd)

Total Linear Thermal Expansion Between 70°F and Indicated Temperature, in./100 ft

Material								
Aluminum	Gray Cast Iron	Bronze	Brass	70Cu–30Ni	UNS N08XXX Series Ni–Fe–Cr	UNS N06XXX Series Ni–Cr–Fe	Ductile Iron	Temp., °F
8.56	3.89	6.31	6.45	...	5.44	4.77	4.22	575
9.03	4.11	6.64	6.80	...	5.72	5.02	4.44	600
...	4.34	6.96	7.16	...	6.01	5.27	4.66	625
...	4.57	7.29	7.53	...	6.30	5.53	4.90	650
...	4.80	7.62	7.89	...	6.58	5.79	5.14	675
...	5.03	7.95	8.26	...	6.88	6.05	5.39	700
...	5.26	8.28	8.64	...	7.17	6.31	5.60	725
...	5.50	8.62	9.02	...	7.47	6.57	5.85	750
...	5.74	8.96	9.40	...	7.76	6.84	6.10	775
...	5.98	9.30	9.78	...	8.06	7.10	6.35	800
...	6.22	9.64	10.17	...	8.35	...	6.59	825
...	6.47	9.99	10.57	...	8.66	...	6.85	850
...	6.72	10.33	10.96	...	8.95	...	7.09	875
...	6.97	10.68	11.35	...	9.26	...	7.35	900
...	7.23	11.02	11.75	...	9.56	...	7.64	925
...	7.50	11.37	12.16	...	9.87	...	7.86	950
...	7.76	11.71	12.57	...	10.18	...	8.11	975
...	8.02	12.05	12.98	...	10.49	...	8.35	1000
...	...	12.40	13.39	...	10.80	...	...	1025
...	...	12.76	13.81	...	11.11	...	...	1050
...	...	13.11	14.23	...	11.42	...	...	1075
...	...	13.47	14.65	...	11.74	...	...	1100
...	...	...	...	...	12.05	...	...	1125
...	...	...	...	...	12.38	...	...	1150
...	...	...	...	...	12.69	...	...	1175
...	...	...	...	...	13.02	...	...	1200
...	...	...	...	...	13.36	...	...	1225
...	...	...	...	...	13.71	...	...	1250
...	...	...	...	...	14.04	...	...	1275
...	...	...	...	...	14.39	...	...	1300
...	...	...	...	...	14.74	...	...	1325
...	...	...	...	...	15.10	...	...	1350
...	...	...	...	...	15.44	...	...	1375
...	...	...	...	...	15.80	...	...	1400
...	...	...	...	...	16.16	...	...	1425
...	...	...	...	...	16.53	...	...	1450
...	...	...	...	...	16.88	...	...	1475
...	...	...	...	...	17.25	...	...	1500

Copyright ASME International
Provided by IHS under license with ASME
No reproduction or networking permitted without license from IHS
Not for Resale

Table C-3 Thermal Coefficients, U.S. Units, for Metals

Mean Coefficient of Linear Thermal Expansion Between 70°F and Indicated Temperature, μin./in.-°F

	Material							
Temp., °F	Carbon Steel Carbon–Moly–Low-Chrome (Through 3Cr–Mo)	5Cr–Mo Through 9Cr–Mo	Austenitic Stainless Steels 18Cr–8Ni	12Cr, 17Cr, 27Cr	25Cr–20Ni	UNS N04400 Monel 67Ni–30Cu	$3^1/_2$Ni	Copper and Copper Alloys
−450	...	...	...	...	...	...	...	6.30
−425	...	...	...	...	...	...	...	6.61
−400	...	...	...	...	...	...	...	6.93
−375	...	...	...	...	...	...	...	7.24
−350	...	...	...	...	...	...	...	7.51
−325	5.00	4.70	8.15	4.30	...	5.55	4.76	7.74
−300	5.07	4.77	8.21	4.36	...	5.72	4.90	7.94
−275	5.14	4.84	8.28	4.41	...	5.89	5.01	8.11
−250	5.21	4.91	8.34	4.47	...	6.06	5.15	8.26
−225	5.28	4.98	8.41	4.53	...	6.23	5.30	8.40
−200	5.35	5.05	8.47	4.59	...	6.40	5.45	8.51
−175	5.42	5.12	8.54	4.64	...	6.57	5.52	8.62
−150	5.50	5.20	8.60	4.70	...	6.75	5.59	8.72
−125	5.57	5.26	8.66	4.78	...	6.85	5.67	8.81
−100	5.65	5.32	8.75	4.85	...	6.95	5.78	8.89
−75	5.72	5.38	8.83	4.93	...	7.05	5.83	8.97
−50	5.80	5.45	8.90	5.00	...	7.15	5.88	9.04
−25	5.85	5.51	8.94	5.05	...	7.22	5.94	9.11
0	5.90	5.56	8.98	5.10	...	7.28	6.00	9.17
25	5.96	5.62	9.03	5.14	...	7.35	6.08	9.23
50	6.01	5.67	9.07	5.19	...	7.41	6.16	9.28
70	6.07	5.73	9.11	5.24	...	7.48	6.25	9.32
100	6.13	5.79	9.16	5.29	...	7.55	6.33	9.39
125	6.19	5.85	9.20	5.34	...	7.62	6.36	9.43
150	6.25	5.92	9.25	5.40	...	7.70	6.39	9.48
175	6.31	5.98	9.29	5.45	...	7.77	6.42	9.52
200	6.38	6.04	9.34	5.50	8.79	7.84	6.45	9.56
225	6.43	6.08	9.37	5.54	8.81	7.89	6.50	9.60
250	6.49	6.12	9.41	5.58	8.83	7.93	6.55	9.64
275	6.54	6.15	9.44	5.62	8.85	7.98	6.60	9.68
300	6.60	6.19	9.47	5.66	8.87	8.02	6.65	9.71
325	6.65	6.23	9.50	5.70	8.89	8.07	6.69	9.74
350	6.71	6.27	9.53	5.74	8.90	8.11	6.73	9.78
375	6.76	6.30	9.56	5.77	8.91	8.16	6.77	9.81
400	6.82	6.34	9.59	5.81	8.92	8.20	6.80	9.84
425	6.87	6.38	9.62	5.85	8.92	8.25	6.83	9.86
450	6.92	6.42	9.65	5.89	8.92	8.30	6.86	9.89
475	6.97	6.46	9.67	5.92	8.92	8.35	6.89	9.92
500	7.02	6.50	9.70	5.96	8.93	8.40	6.93	9.94
525	7.07	6.54	9.73	6.00	8.93	8.45	6.97	9.97
550	7.12	6.58	9.76	6.05	8.93	8.49	7.01	9.99

--`,,```,,,,````-`-`,,`,,`,`,,`---

Copyright ASME International
Provided by IHS under license with ASME
No reproduction or networking permitted without license from IHS Not for Resale

Table C-3 Thermal Coefficients, U.S. Units, for Metals

Mean Coefficient of Linear Thermal Expansion Between 70°F and Indicated Temperature, μin./in.-°F

Material								
Aluminum	Gray Cast Iron	Bronze	Brass	70Cu–30Ni	UNS N08XXX Series Ni–Fe–Cr	UNS N06XXX Series Ni-Cr-Fe	Ductile Iron	Temp., °F
...	...	...	...	...	...	...	...	–450
...	...	...	...	...	...	...	...	–425
...	...	...	...	...	...	...	...	–400
...	...	...	...	...	...	...	...	–375
...	...	...	...	...	...	...	...	–350
9.90	...	8.40	8.20	6.65	...	...	...	–325
10.04	...	8.45	8.24	6.76	...	...	...	–300
10.18	...	8.50	8.29	6.86	...	...	...	–275
10.33	...	8.55	8.33	6.97	...	...	...	–250
10.47	...	8.60	8.37	7.08	...	...	...	–225
10.61	...	8.65	8.41	7.19	...	...	4.65	–200
10.76	...	8.70	8.46	7.29	...	...	4.76	–175
10.90	...	8.75	8.50	7.40	...	...	4.87	–150
11.08	...	8.85	8.61	7.50	...	...	4.98	–125
11.25	...	8.95	8.73	7.60	...	...	5.10	–100
11.43	...	9.05	8.84	7.70	...	...	5.20	–75
11.60	...	9.15	8.95	7.80	...	...	5.30	–50
11.73	...	9.23	9.03	7.87	...	...	5.40	–25
11.86	...	9.32	9.11	7.94	...	...	5.50	0
11.99	...	9.40	9.18	8.02	...	...	5.58	25
12.12	...	9.49	9.26	8.09	...	...	5.66	50
12.25	...	9.57	9.34	8.16	...	7.13	5.74	70
12.39	...	9.66	9.42	8.24	...	7.20	5.82	100
12.53	...	9.75	9.51	8.31	...	7.25	5.87	125
12.67	...	9.85	9.59	8.39	...	7.30	5.92	150
12.81	...	9.93	9.68	8.46	...	7.35	5.97	175
12.95	5.75	10.03	9.76	8.54	7.90	7.40	6.02	200
13.03	5.80	10.05	9.82	8.58	8.01	7.44	6.08	225
13.12	5.84	10.08	9.88	8.63	8.12	7.48	6.14	250
13.20	5.89	10.10	9.94	8.67	8.24	7.52	6.20	275
13.28	5.93	10.12	10.00	8.71	8.35	7.56	6.25	300
13.36	5.97	10.15	10.06	8.76	8.46	7.60	6.31	325
13.44	6.02	10.18	10.11	8.81	8.57	7.63	6.37	350
13.52	6.06	10.20	10.17	8.85	8.69	7.67	6.43	375
13.60	6.10	10.23	10.23	8.90	8.80	7.70	6.48	400
13.68	6.15	10.25	10.29	...	8.82	7.72	6.57	425
13.75	6.19	10.28	10.35	...	8.85	7.75	6.66	450
13.83	6.24	10.30	10.41	...	8.87	7.77	6.75	475
13.90	6.28	10.32	10.47	...	8.90	7.80	6.85	500
13.98	6.33	10.35	10.53	...	8.92	7.82	6.88	525
14.05	6.38	10.38	10.58	...	8.95	7.85	6.92	550

Copyright ASME International
Provided by IHS under license with ASME
No reproduction or networking permitted without license from IHS
Not for Resale

Table C-3 Thermal Coefficients, U.S. Units, for Metals (Cont'd)

Mean Coefficient of Linear Thermal Expansion Between 70°F and Indicated Temperature, μin./in.-°F

	Material							
Temp., °F	Carbon Steel Carbon–Moly–Low-Chrome (Through 3Cr–Mo)	5Cr–Mo Through 9Cr–Mo	Austenitic Stainless Steels 18Cr–8Ni	12Cr, 17Cr, 27Cr	25Cr–20Ni	UNS N04400 Monel 67Ni–30Cu	$3^1/_2$Ni	Copper and Copper Alloys
575	7.17	6.62	9.79	6.09	8.93	8.54	7.04	10.1
600	7.23	6.66	9.82	6.13	8.94	8.58	7.08	10.04
625	7.28	6.70	9.85	6.17	8.94	8.63	7.12	...
650	7.33	6.73	9.87	6.20	8.95	8.68	7.16	...
675	7.38	6.77	9.90	6.23	8.95	8.73	7.19	...
700	7.44	6.80	9.92	6.26	8.96	8.78	7.22	...
725	7.49	6.84	9.95	6.29	8.96	8.83	7.25	...
750	7.54	6.88	9.99	6.33	8.96	8.87	7.29	...
775	7.59	6.92	10.02	6.36	8.96	8.92	7.31	...
800	7.65	6.96	10.05	6.39	8.97	8.96	7.34	...
825	7.70	7.00	10.08	6.42	8.97	9.01	7.37	...
850	7.75	7.03	10.11	6.46	8.98	9.06	7.40	...
875	7.79	7.07	10.13	6.49	8.99	9.11	7.43	...
900	7.84	7.10	10.16	6.52	9.00	9.16	7.45	...
925	7.87	7.13	10.19	6.55	9.05	9.21	7.47	...
950	7.91	7.16	10.23	6.58	9.10	9.25	7.49	...
975	7.94	7.19	10.26	6.60	9.15	9.30	7.52	...
1000	7.97	7.22	10.29	6.63	9.18	9.34	7.55	...
1025	8.01	7.25	10.32	6.65	9.20	9.39	...	...
1050	8.05	7.27	10.34	6.68	9.22	9.43	...	...
1075	8.08	7.30	10.37	6.70	9.24	9.48	...	...
1100	8.12	7.32	10.39	6.72	9.25	9.52	...	...
1125	8.14	7.34	10.41	6.74	9.29	9.57	...	...
1150	8.16	7.37	10.44	6.75	9.33	9.61	...	...
1175	8.17	7.39	10.46	6.77	9.36	9.66	...	...
1200	8.19	7.41	10.48	6.78	9.39	9.70	...	...
1225	8.21	7.43	10.50	6.80	9.43	9.75	...	...
1250	8.24	7.45	10.51	6.82	9.47	9.79	...	...
1275	8.26	7.47	10.53	6.83	9.50	9.84	...	...
1300	8.28	7.49	10.54	6.85	9.53	9.88	...	...
1325	8.30	7.51	10.56	6.86	9.53	9.92	...	...
1350	8.32	7.52	10.57	6.88	9.54	9.96	...	...
1375	8.34	7.54	10.59	6.89	9.55	10.00	...	...
1400	8.36	7.55	10.60	6.90	9.56	10.04	...	...
1425	...	...	10.64	...	...	...	...	...
1450	...	...	10.68	...	...	...	...	...
1475	...	...	10.72	...	...	...	...	...
1500	...	...	10.77	...	...	...	...	...

GENERAL NOTE: For Code references to this Appendix, see para. 319.3.1. These data are for use in the absence of more applicable data. It is the designer's responsibility to verify that materials are suitable for the intended service at the temperatures shown.

Copyright ASME International
Provided by IHS under license with ASME
No reproduction or networking permitted without license from IHS Not for Resale

Table C-3 Thermal Coefficients, U.S. Units, for Metals (Cont'd)

Mean Coefficient of Linear Thermal Expansion Between 70°F and Indicated Temperature, μin./in.-°F

Material								
Aluminum	Gray Cast Iron	Bronze	Brass	70Cu–30Ni	UNS N08XXX Series Ni–Fe–Cr	UNS N06XXX Series Ni–Cr–Fe	Ductile Iron	Temp., °F
14.13	6.42	10.41	10.64	...	8.97	7.88	6.95	575
14.20	6.47	10.44	10.69	...	9.00	7.90	6.98	600
...	6.52	10.46	10.75	...	9.02	7.92	7.02	625
...	6.56	10.48	10.81	...	9.05	7.95	7.04	650
...	6.61	10.50	10.86	...	9.07	7.98	7.08	675
...	6.65	10.52	10.92	...	9.10	8.00	7.11	700
...	6.70	10.55	10.98	...	9.12	8.02	7.14	725
...	6.74	10.57	11.04	...	9.15	8.05	7.18	750
...	6.79	10.60	11.10	...	9.17	8.08	7.22	775
...	6.83	10.62	11.16	...	9.20	8.10	7.25	800
...	6.87	10.65	11.22	...	9.22	...	7.27	825
...	6.92	10.67	11.28	...	9.25	...	7.31	850
...	6.96	10.70	11.34	...	9.27	...	7.34	875
...	7.00	10.72	11.40	...	9.30	...	7.37	900
...	7.05	10.74	11.46	...	9.32	...	7.41	925
...	7.10	10.76	11.52	...	9.35	...	7.44	950
...	7.14	10.78	11.57	...	9.37	...	7.47	975
...	7.19	10.80	11.63	...	9.40	...	7.50	1000
...	...	10.83	11.69	...	9.42	...	...	1025
...	...	10.85	11.74	...	9.45	...	...	1050
...	...	10.88	11.80	...	9.47	...	...	1075
...	...	10.90	11.85	...	9.50	...	...	1100
...	...	10.93	11.91	...	9.52	...	...	1125
...	...	10.95	11.97	...	9.55	...	...	1150
...	...	10.98	12.03	...	9.57	...	...	1175
...	...	11.00	12.09	...	9.60	...	...	1200
...	...	...	...	...	9.64	...	...	1225
...	...	...	...	...	9.68	...	...	1250
...	...	...	...	...	9.71	...	...	1275
...	...	...	...	...	9.75	...	...	1300
...	...	...	...	...	9.79	...	...	1325
...	...	...	...	...	9.83	...	...	1350
...	...	...	...	...	9.86	...	...	1375
...	...	...	...	...	9.90	...	...	1400
...	...	...	...	...	9.94	...	...	1425
...	...	...	...	...	9.98	...	...	1450
...	...	...	...	...	10.01	...	...	1475
...	...	...	...	...	10.05	...	...	1500

Copyright ASME International
Provided by IHS under license with ASME
No reproduction or networking permitted without license from IHS
Not for Resale

Table C-5 Thermal Expansion Coefficients, Nonmetals

Material Description	Mean Coefficients (Divide Table Values by 10^6)			
	in./in., °F	Range, °F	mm/mm, °C	Range, °C
Thermoplastics				
Acetal AP2012	2	...	3.6	...
Acrylonitrile-butadiene-styrene				
ABS 1208	60	...	108	...
ABS 1210	55	45–55	99	7–13
ABS 1316	40	...	72	...
ABS 2112	40	...	72	...
Cellulose acetate butyrate				
CAB MH08	80	...	144	...
CAB S004	95	...	171	...
Chlorinated poly(vinyl chloride)				
CPVC 4120	35	...	63	...
Polybutylene PB 2110	72	...	130	...
Polyether, chlorinated	45	...	81	...
Polyethylene				
PE 1404	100	46–100	180	8–38
PE 2305	90	46–100	162	8–38
PE 2306	80	46–100	144	8–38
PE 3306	70	46–100	126	8–38
PE 3406	60	46–100	108	8–38
Polyphenylene POP 2125	30	...	54	...
Polypropylene				
PP1110	48	33–67	86	1–19
PP1208	43	...	77	...
PP2105	40	...	72	...
Poly(vinyl chloride)				
PVC 1120	30	23–37	54	−5 to +3
PVC 1220	35	34–40	63	1–4
PVC 2110	50	...	90	...
PVC 2112	45	...	81	...
PVC 2116	40	37–45	72	3–7
PVC 2120	30	...	54	...
Poly(vinylidene fluoride)	79	...	142	...
Poly(vinylidene chloride)	100	...	180	...
Polytetrafluoroethylene	55	73–140	99	23–60
Poly(fluorinated ethylenepropylene)	46–58	73–140	83–104	23–60
Poly(perfluoroalkoxy alkane)	67	70–212	121	21–100
Poly(perfluoroalkoxy alkane)	94	212–300	169	100–149
Poly(perfluoroalkoxy alkane)	111	300–408	200	149–209

Copyright ASME International
Provided by IHS under license with ASME
No reproduction or networking permitted without license from IHS
Not for Resale

Table C-5 Thermal Expansion Coefficients, Nonmetals (Cont'd)

Material Description	Mean Coefficients (Divide Table Values by 10^6)			
	in./in., °F	Range, °F	mm/mm, °C	Range, °C
Reinforced Thermosetting Resins and Reinforced Plastic Mortars				
Glass-epoxy, centrifugally cast	9–13	...	16–23.5	...
Glass-polyester, centrifugally cast	9–15	...	16–27	...
Glass-polyester, filament-wound	9–11	...	16–20	...
Glass-polyester, hand lay-up	12–15	...	21.5–27	...
Glass-epoxy, filament-wound	9–13	...	16–23.5	...
Other Nonmetallic Materials				
Borosilicate glass	1.8	...	3.25	...

GENERAL NOTES:

(a) For Code references to this Appendix, see para. A319.3.1. These data are for use in the absence of more applicable data. It is the designer's responsibility to verify that materials are suitable for the intended service at the temperatures shown.

(b) Individual compounds may vary from the values shown. Consult manufacturer for specific values for products.

Copyright ASME International
Provided by IHS under license with ASME
No reproduction or networking permitted without license from IHS
Not for Resale

Table C-6 Modulus of Elasticity, U.S. Units, for Metals

Material	E = Modulus of Elasticity, Msi (Millions of psi), at Temperature, °F									
	−425	−400	−350	−325	−200	−100	70	200	300	400
Ferrous Metals										
Gray cast iron	...	...	...	...	...	...	13.4	13.2	12.9	12.6
Carbon steels, C ≤ 0.3%	31.9	...	...	31.4	30.8	30.2	29.5	28.8	28.3	27.7
Carbon steels, C > 0.3%	31.7	...	...	31.2	30.6	30.0	29.3	28.6	28.1	27.5
Carbon–moly steels	31.7	...	...	31.1	30.5	29.9	29.2	28.5	28.0	27.4
Nickel steels, Ni 2%–9%	30.1	...	...	29.6	29.1	28.5	27.8	27.1	26.7	26.1
Cr–Mo steels, Cr $\frac{1}{2}$%–2%	32.1	...	...	31.6	31.0	30.4	29.7	29.0	28.5	27.9
Cr–Mo steels, Cr $2\frac{1}{4}$%–3%	33.1	...	...	32.6	32.0	31.4	30.6	29.8	29.4	28.8
Cr–Mo steels, Cr 5%–9%	33.4	...	...	32.9	32.3	31.7	30.9	30.1	29.7	29.0
Chromium steels, Cr 12%, 17%, 27%	31.8	...	...	31.2	30.7	30.1	29.2	28.5	27.9	27.3
Austenitic steels (TP304, 310, 316, 321, 347)	30.8	...	...	30.3	29.7	29.0	28.3	27.6	27.0	26.5
Copper and Copper Alloys (UNS Nos.)										
Comp. and leaded Sn–bronze (C83600, C92200)	...	...	...	14.8	14.6	14.4	14.0	13.7	13.4	13.2
Naval brass, Si– & Al–bronze (C46400, C65500, C95200, C95400)	...	...	...	15.9	15.6	15.4	15.0	14.6	14.4	14.1
Copper (C11000)	...	...	...	16.9	16.6	16.5	16.0	15.6	15.4	15.0
Copper, red brass, Al–bronze (C10200, C12000, C12200, C12500, C14200, C23000, C61400)	...	...	...	18.0	17.7	17.5	17.0	16.6	16.3	16.0
90Cu–10Ni (C70600)	...	...	...	19.0	18.7	18.5	18.0	17.6	17.3	16.9
Leaded Ni–bronze	...	...	...	20.1	19.8	19.6	19.0	18.5	18.2	17.9
80Cu–20Ni (C71000)	...	...	...	21.2	20.8	20.6	20.0	19.5	19.2	18.8
70Cu–30Ni (C71500)	...	...	...	23.3	22.9	22.7	22.0	21.5	21.1	20.7
Nickel and Nickel Alloys (UNS Nos.)										
Monel 400 N04400	28.3	...	...	27.8	27.3	26.8	26.0	25.4	25.0	24.7
Alloys N06007, N08320	30.3	...	...	29.5	29.2	28.6	27.8	27.1	26.7	26.4
Alloys N08800, N08810, N06002	31.1	...	...	30.5	29.9	29.4	28.5	27.8	27.4	27.1
Alloys N06455, N10276	32.5	...	...	31.6	31.3	30.6	29.8	29.1	28.6	28.3
Alloys N02200, N02201, N06625	32.7	...	...	32.1	31.5	30.9	30.0	29.3	28.8	28.5
Alloy N06600	33.8	...	...	33.2	32.6	31.9	31.0	30.2	29.9	29.5
Alloy N10001	33.9	...	...	33.3	32.7	32.0	31.1	30.3	29.9	29.5
Alloy N10665	34.2	...	...	33.3	33.0	32.3	31.4	30.6	30.1	29.8
Unalloyed Titanium										
Grades 1, 2, 3, and 7	...	...	...	...	...	...	15.5	15.0	14.6	14.0

Copyright ASME International
Provided by IHS under license with ASME
No reproduction or networking permitted without license from IHS
Not for Resale

Table C-6 Modulus of Elasticity, U.S. Units, for Metals

E = Modulus of Elasticity, Msi (Millions of psi), at Temperature, °F											
500	600	700	800	900	1000	1100	1200	1300	1400	1500	Material
											Ferrous Metals
12.2	11.7	11.0	10.2	...	...	...	...	...	...	...	Gray cast iron
27.3	26.7	25.5	24.2	22.4	20.4	18.0	...	...	...	...	Carbon steels, C ≤ 0.3%
27.1	26.5	25.3	24.0	22.2	20.2	17.9	15.4	...	...	...	Carbon steels, C > 0.3%
27.0	26.4	25.3	23.9	22.2	20.1	17.8	15.3	...	...	...	Carbon–moly steels
25.7	25.2	24.6	23.0	...	...	...	...	...	...	...	Nickel steels, Ni 2%–9%
27.5	26.9	26.3	25.5	24.8	23.9	23.0	21.8	20.5	18.9	...	Cr–Mo steels, Cr $\frac{1}{2}$%–2%
28.3	27.7	27.1	26.3	25.6	24.6	23.7	22.5	21.1	19.4	...	Cr–Mo steels, Cr $2\frac{1}{4}$%–3%
28.6	28.0	27.3	26.1	24.7	22.7	20.4	18.2	15.5	12.7	...	Cr–Mo steels, Cr 5%–9%
26.7	26.1	25.6	24.7	22.2	21.5	19.1	16.6	...	...	...	Chromium steels, Cr 12%, 17%, 27%
25.8	25.3	24.8	24.1	23.5	22.8	22.1	21.2	20.2	19.2	18.1	Austenitic steels (TP304, 310, 316, 321, 347)
											Copper and Copper Alloys (UNS Nos.)
12.9	12.5	12.0	...	...	...	...	...	...	...	...	Comp. and leaded Sn–bronze (C83600, C92200)
13.8	13.4	12.8	...	...	...	...	...	...	...	...	Naval brass, Si– & Al–bronze (C46400, C65500, C95200, C95400)
14.7	14.2	13.7	...	...	...	...	...	...	...	...	Copper (C11000)
15.6	15.1	14.5	...	...	...	...	...	...	...	...	Copper, red brass, Al–bronze (C10200, C12000, C12200, C12500, C14200, C23000, C61400)
16.6	16.0	15.4	...	...	...	...	...	...	...	...	90Cu–10Ni (C70600)
17.5	16.9	16.2	...	...	...	...	...	...	...	...	Leaded Ni-bronze
18.4	17.8	17.1	...	...	...	...	...	...	...	...	80Cu–20Ni (C71000)
20.2	19.6	18.8	...	...	...	...	...	...	...	...	70Cu–30Ni (C71500)
											Nickel and Nickel Alloys (UNS Nos.)
24.3	24.1	23.7	23.1	22.6	22.1	21.7	21.2	...	...	...	Monel 400 N04400
26.0	25.7	25.3	24.7	24.2	23.6	23.2	22.7	...	...	...	Alloys N06007, N08320
26.6	26.4	25.9	25.4	24.8	24.2	23.8	23.2	...	...	...	Alloys N08800, N08810, N06002
27.9	27.6	27.1	26.5	25.9	25.3	24.9	24.3	...	...	...	Alloys N06455, N10276
28.1	27.8	27.3	26.7	26.1	25.5	25.1	24.5	...	...	...	Alloys N02200, N02201, N06625
29.0	28.7	28.2	27.6	27.0	26.4	25.9	25.3	...	...	...	Alloy N06600
29.1	28.8	28.3	27.7	27.1	26.4	26.0	25.3	...	...	...	Alloy N10001
29.4	29.0	28.6	27.9	27.3	26.7	26.2	25.6	...	...	...	Alloy N10665
											Unalloyed Titanium
13.3	12.6	11.9	11.2	...	...	...	...	...	...	...	Grades 1, 2, 3, and 7

Copyright ASME International
Provided by IHS under license with ASME
No reproduction or networking permitted without license from IHS
Not for Resale

Table C-6 Modulus of Elasticity, U.S. Units, for Metals (Cont'd)

Material	E = Modulus of Elasticity, Msi (Millions of psi), at Temperature, °F									
	−425	−400	−350	−325	−200	−100	70	200	300	400
Aluminum and Aluminum Alloys (UNS Nos.)										
Grades 443, 1060, 1100, 3003, 3004, 6061, 6063 (A24430, A91060, A91100, A93003, A93004, A96061, A96063)	11.4	. . .	. . .	11.1	10.8	10.5	10.0	9.6	9.2	8.7
Grades 5052, 5154, 5454, 5652 (A95052, A95154, A95454, A95652)	11.6	. . .	. . .	11.3	11.0	10.7	10.2	9.7	9.4	8.9
Grades 356, 5083, 5086, 5456 (A03560, A95083, A95086, A95456)	11.7	. . .	. . .	11.4	11.1	10.8	10.3	9.8	9.5	9.0

Copyright ASME International
Provided by IHS under license with ASME
No reproduction or networking permitted without license from IHS Not for Resale

Table C-8 Modulus of Elasticity, Nonmetals

Material Description	*E*, ksi (73.4°F)	*E*, MPa (23°C)
Thermoplastics [Note (1)]		
Acetal	410	2 830
ABS, Type 1210	250	1 725
ABS, Type 1316	340	2 345
CAB	120	825
PVC, TYPE 1120	420	2 895
PVC, Type 1220	410	2 825
PVC, Type 2110	340	2 345
PVC, Type 2116	380	2 620
Chlorinated PVC	420	2 895
Chlorinated polyether	160	1 105
PE, Type 2306	90	620
PE, Type 3306	130	895
PE, Type 3406	150	1 035
Polypropylene	120	825
Poly(vinylidene chloride)	100	690
Poly(vinylidene fluoride)	194	1 340
Poly(tetrafluorethylene)	57	395
Poly(fluorinated ethylenepropylene)	67	460
Poly(perfluoroalkoxy alkane)	100	690
Thermosetting Resins, Axially Reinforced		
Epoxy-glass, centrifugally cast	1200–1900	8 275–13 100
Epoxy-glass, filament-wound	1100–2000	7 585–13 790
Polyester-glass, centrifugally cast	1200–1900	8 275–13 100
Polyester-glass, hand lay-up	800–1000	5 515–6 895
Other		
Borosilicate glass	9800	67 570

GENERAL NOTE: For Code references to this Appendix, see para. A319.3.2. These data are for use in the absence of more applicable data. It is the designer's responsibility to verify that materials are suitable for the intended service at the temperatures shown.

NOTE:

(1) The modulus of elasticity data shown for thermoplastics are based on short term tests. The manufacturer should be consulted to obtain values for use under long-term loading.

Copyright ASME International
Provided by IHS under license with ASME
No reproduction or networking permitted without license from IHS
Not for Resale

APPENDIX D
FLEXIBILITY AND STRESS INTENSIFICATION FACTORS

Table D300[1] Flexibility Factor, *k*, and Stress Intensification Factor, *i*

Description	Flexibility Factor, k	Stress Intensification Factor [Notes (2), (3)] Out-of-Plane, i_o	Stress Intensification Factor [Notes (2), (3)] In-Plane, i_i	Flexibility Characteristic, h	Sketch
Welding elbow or pipe bend [Notes (2), (4)-(7)]	$\frac{1.65}{h}$	$\frac{0.75}{h^{2/3}}$	$\frac{0.9}{h^{2/3}}$	$\frac{\overline{T}R_1}{r_2^{\,2}}$	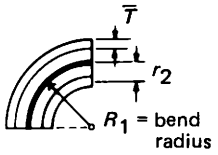
Closely spaced miter bend $s < r_2 (1 + \tan \theta)$ [Notes (2), (4), (5), (7)]	$\frac{1.52}{h^{5/6}}$	$\frac{0.9}{h^{2/3}}$	$\frac{0.9}{h^{2/3}}$	$\frac{\cot \theta}{2}\left(\frac{s\overline{T}}{r_2^{\,2}}\right)$	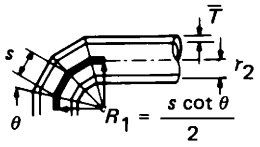
Single miter bend or widely spaced miter bend $s \geq r_2 (1 + \tan \theta)$ [Notes (2), (4), (7)]	$\frac{1.52}{h^{5/6}}$	$\frac{0.9}{h^{2/3}}$	$\frac{0.9}{h^{2/3}}$	$\frac{1 + \cot \theta}{2}\left(\frac{\overline{T}}{r_2}\right)$	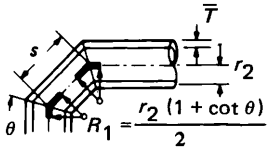
Welding tee per ASME B16.9 [Notes (2), (4), (6), (11), (13)]	1	$\frac{0.9}{h^{2/3}}$	$\frac{3}{4} i_o + \frac{1}{4}$	$3.1\,\frac{\overline{T}}{r_2}$	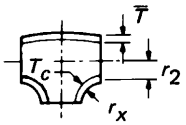
Reinforced fabricated tee with pad or saddle [Notes (2), (4), (8), (12), (13)]	1	$\frac{0.9}{h^{2/3}}$	$\frac{3}{4}\, i_o + \frac{1}{4}$	$\frac{(\overline{T} + \frac{1}{2}\,\overline{T}_r)^{2.5}}{\overline{T}^{\,1.5}\, r_2}$	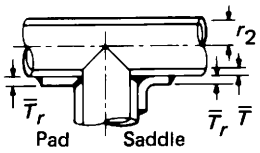

Copyright ASME International
Provided by IHS under license with ASME
No reproduction or networking permitted without license from IHS
Not for Resale

Table D300[1] Flexibility Factor, k, and Stress Intensification Factor, i (Cont'd)

Description	Flexibility Factor, k	Stress Intensification Factor [Notes (2), (3)] Out-of-Plane, i_o	Stress Intensification Factor [Notes (2), (3)] In-Plane, i_i	Flexibility Characteristic, h	Sketch
Unreinforced fabricated tee [Notes (2), (4), (12), (13)]	1	$\frac{0.9}{h^{2/3}}$	$\frac{3}{4}i_o + \frac{1}{4}$	$\frac{\overline{T}}{r_2}$	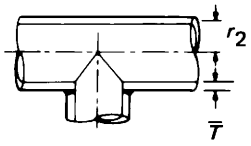
Extruded welding tee with $r_x \geq 0.05\ D_b$ $T_c < 1.5\ \overline{T}$ [Notes (2), (4), (13)]	1	$\frac{0.9}{h^{2/3}}$	$\frac{3}{4}i_o + \frac{1}{4}$	$\left(1 + \frac{r_x}{r_2}\right)\frac{\overline{T}}{r_2}$	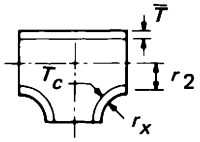
Welded-in contour insert [Notes (2), (4), (11), (13)]	1	$\frac{0.9}{h^{2/3}}$	$\frac{3}{4}i_o + \frac{1}{4}$	$3.1\ \frac{\overline{T}}{r_2}$	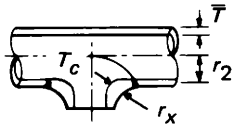
Branch welded-on fitting (integrally reinforced) [Notes (2), (4), (9), (12)]	1	$\frac{0.9}{h^{2/3}}$	$\frac{0.9}{h^{2/3}}$	$3.3\ \frac{\overline{T}}{r_2}$	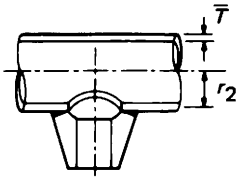

Description	Flexibility Factor, k	Stress Intensification Factor, i [Note (1)]
Butt welded joint, reducer, or weld neck flange	1	1.0
Double-welded slip-on flange	1	1.2
Fillet welded joint, or socket weld flange or fitting	1	Note (14)
Lap joint flange (with ASME B16.9 lap joint stub)	1	1.6
Threaded pipe joint or threaded flange	1	2.3
Corrugated straight pipe, or corrugated or creased bend [Note (10)]	5	2.5

Copyright ASME International
Provided by IHS under license with ASME
No reproduction or networking permitted without license from IHS
Not for Resale

Table D300[1] Flexibility Factor, *k*, and Stress Intensification Factor, *i* (Cont'd)

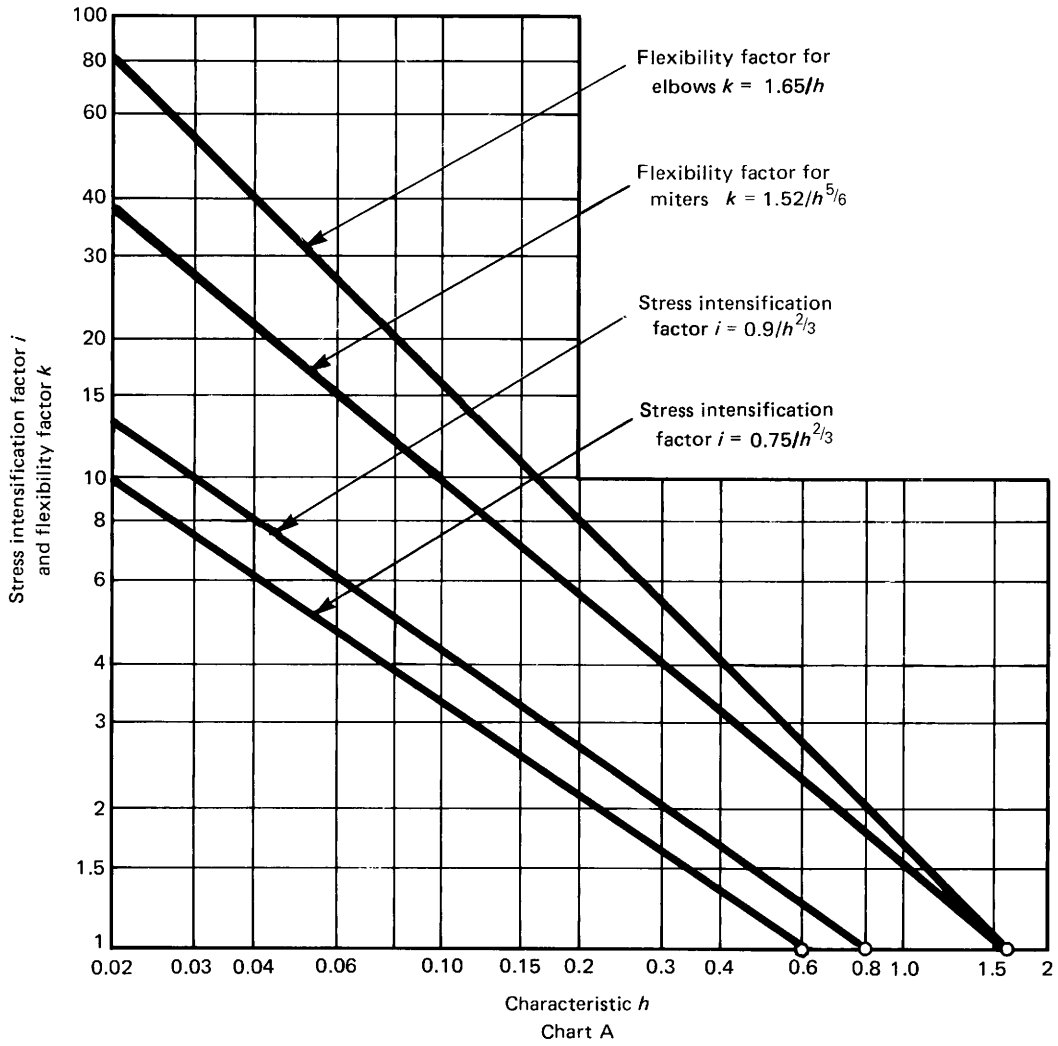

Chart A

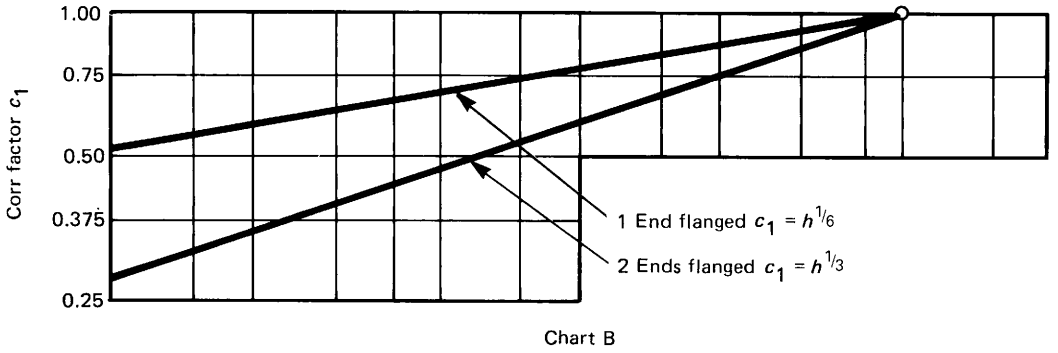

Chart B

Notes to this Table follow on next page

Copyright ASME International
Provided by IHS under license with ASME
No reproduction or networking permitted without license from IHS
Not for Resale

Table D300[1] Flexibility Factor, *k*, and Stress Intensification Factor, *i* (Cont'd) (04)

NOTES:

(1) Stress intensification and flexibility factor data in Table D300 are for use in the absence of more directly applicable data (see para. 319.3.6). Their validity has been demonstrated for $D/\overline{T} \le 100$.

(2) The flexibility factor, *k,* in the Table applies to bending in any plane. The flexibility factors, *k,* and stress intensification factors, *i,* shall not be less than unity; factors for torsion equal unity. Both factors apply over the effective arc length (shown by heavy centerlines in the sketches) for curved and miter bends, and to the intersection point for tees.

(3) A single intensification factor equal to $0.9/h^{2/3}$ may be used for both i_i and i_o if desired.

(4) The values of *k* and *i* can be read directly from Chart A by entering with the characteristic *h* computed from the formulas given above. Nomenclature is as follows:

D_b = outside diameter of branch
R_1 = bend radius of welding elbow or pipe bend
r_x = see definition in para. 304.3.4(c)
r_2 = mean radius of matching pipe
s = miter spacing at centerline
$\overline{T}$ = for elbows and miter bends, the nominal wall thickness of the fitting
= for tees, the nominal wall thickness of the matching pipe
T_c = crotch thickness of branch connections measured at the center of the crotch where shown in the sketches
$\overline{T}_r$ = pad or saddle thickness
θ = one-half angle between adjacent miter axes

(5) Where flanges are attached to one or both ends, the values of *k* and *i* in the Table shall be corrected by the factors C_1, which can be read directly from Chart B, entering with the computed *h*.

(6) The designer is cautioned that cast buttwelded fittings may have considerably heavier walls than that of the pipe with which they are used. Large errors may be introduced unless the effect of these greater thicknesses is considered.

(7) In large diameter thin-wall elbows and bends, pressure can significantly affect the magnitudes of *k* and *i*. To correct values from the Table, divide *k* by

$$1 + 6\left(\frac{P}{E}\right)\left(\frac{r_2}{\overline{T}}\right)^{7/3}\left(\frac{R_1}{r_2}\right)^{1/3}$$

divide *i* by

$$1 + 3.25\left(\frac{P}{E}\right)\left(\frac{r_2}{\overline{T}}\right)^{5/2}\left(\frac{R_1}{r_2}\right)^{2/3}$$

For consistency, use kPa and mm for SI metric, and psi and in. for U.S. customary notation.

(8) When $\overline{T}_r$ is $> 1\frac{1}{2}\,\overline{T}$, use $h = 4\,\overline{T}/r_2$.

(9) The designer must be satisfied that this fabrication has a pressure rating equivalent to straight pipe.

(10) Factors shown apply to bending. Flexibility factor for torsion equals 0.9.

(11) If $r_x \ge \frac{1}{8}\,D_b$ and $T_c \ge 1.5\overline{T}$, a flexibility characteristic of $4.4\,\overline{T}/r_2$ may be used.

(12) The out-of-plane stress intensification factor (SIF) for a reducing branch connection with branch-to-run diameter ratio of $0.5 < d/D < 1.0$ may be nonconservative. A smooth concave weld contour has been shown to reduce the SIF. Selection of the appropriate SIF is the designer's responsibility.

(13) Stress intensification factors for branch connections are based on tests with at least two diameters of straight run pipe on each side of the branch centerline. More closely loaded branches may require special consideration.

(14) 2.1 max. or $2.1\,\overline{T}/C_x$, but not less than 1.3. C_x is the fillet weld leg length (see Fig. 328.5.2C). For unequal leg lengths, use the smaller leg for C_x.

Copyright ASME International
Provided by IHS under license with ASME
No reproduction or networking permitted without license from IHS Not for Resale

APPENDIX E
REFERENCE STANDARDS[1]

(04)

Standards incorporated in this Code by reference, and the names and addresses of the sponsoring organizations are shown in this Appendix. It is not practical to refer to a specific edition of each standard throughout the Code text; instead, the specific edition reference dates are shown here. Subsequent issues and revisions of these referenced standards and any new standards incorporated in the Code by reference in Code Addenda will be listed (after review and acceptance by the Code Committee) in revisions of this Appendix E.

A component ordinarily is not marked to indicate the edition date of the standard to which it is manufactured. It is therefore possible that an item taken from inventory was produced in accordance with a superseded edition, or an edition not yet approved by the Code (because it is of later date than that listed and is in use). If compliance with a specific edition is a requirement of the intended service, it usually will be necessary to state the specific requirement in the purchase specification and to maintain identification of the component until it is put in service.

ASTM Specifications

A 20-96a
A 36-97a
A 47-90 (R1996)
A 48-94a
A 53-97
A 105-98
A 106-97a
A 126-95
A 134-96
A 135-97
A 139-96
A 167-96
A 179-90a (R1996)
A 181-95b
A 182-97c
A 193-97a
A 194-97
A 197-98
A 202-97
A 203-97
A 204-93
A 210/A 210M-02
A 216-93 (R1998)
A 217-95
A 234-97
A 240-97a
A 263-94a
A 264-94a
A 265-94a
A 268-96
A 269-96
A 276-97
A 278-93
A 283-97
A 285-90 (R1996)
A 299-97

ASTM Specifications (Cont'd)

A 302-97
A 307-97
A 312-95a
A 320-97
A 325-97
A 333-98
A 334-96
A 335-95a
A 350-97
A 351-94a
A 352-93 (R1998)
A 353-93
A 354-97
A 358-95a
A 369-92
A 370-97a
A 376-96
A 381-96
A 387-92 (R1997)
A 395-98
A 403-98
A 409-95a
A 420-96a
A 426-92 (R1997)
A 437-98
A 451-93 (R1997)
A 453-96
A 479-97a
A 487-93 (R1998)
A 494-98
A 508/A 508M-95 (R1999)
A 515-92 (R1997)
A 516-90 (R1996)
A 524-98
A 530-98
A 537-95

ASTM Specifications (Cont'd)

A 553-95
A 563-94
A 570-96
A 571-84 (R1992)
A 587-96
A 645-97
A 671-96
A 672-96
A 675-90a (R1995)
A 691-98
A 723/A 723M-94 (R1999)
A 789-95
A 790-95
A 815-94
B 21/B 21M-01
B 26-98
B 42-98
B 43-98
B 61-93
B 62-93
B 68-99
B 75-99
B 88-99
B 96/B 96M-01
B 98/B 98M-98
B 127-98
B 148-97
B 150-95a
B 152/B 152M-00
B 160-93
B 161-93
B 162-93a
B 164-95
B 165-98
B 166-97a
B 167-98

--`,,```,,,,````-`-`,,`,,`,`,,`---
Copyright ASME International
Provided by IHS under license with ASME
No reproduction or networking permitted without license from IHS
Not for Resale

REFERENCE STANDARDS (CONT'D)

ASTM Specifications (Cont'd)

B 168-98
B 169/B 169M-01
B 171/B 171M-99
B 187-00

B 209-96
B 210-95
B 211-95a
B 221-96
B 241-96
B 247-95a

B 265-95a
B 280-99
B 283-99

B 333-98
B 335-97
B 337-95
B 338-02
B 345-96

B 361-95
B 363-02
B 366-98a
B 381-97

B 407-96
B 409-96a
B 423-99
B 424-98a
B 425-99
B 435-98a
B 443-99
B 444-94
B 446-98

B 462-97
B 463-98a
B 464-93
B 466/B 466M-98
B 467-88 (R1997)
B 491-95
B 493-83 (R1993)

B 514-95
B 517-98
B 523-97
B 547-95
B 550-97

B 551-97
B 564-98a
B 574-98
B 575-98
B 581-97
B 582-97
B 584-00

ASTM Specifications (Cont'd)

B 619-98
B 620-98a
B 621-95a
B 622-98a
B 625-95
B 649-95

B 658-97
B 675-96
B 688-96
B 690-96

B 705-94
B 725-93
B 729-95
B 804-96

C 14-95
C 301-98
C 361-96

C 582-95
C 599-91 (R1995)

D 1527-99
D 1600-98
D 1694-95 (R2000)
D 1785-99

D 2104-01
D 2235-01
D 2239-01
D 2241-00
D 2282-99
D 2310-01
D 2321-00
D 2447-01
D 2464-99
D 2466-00
D 2467-01
D 2468-96a

D 2513-01a
D 2517-00
D 2564-96a
D 2609-00
D 2657-97
D 2662-96a
D 2666-96a
D 2672-96a
D 2683-98
D 2737-01
D 2837-01
D 2846/D 2846M-99
D 2855-96
D 2992-01
D 2996-01

ASTM Specifications (Cont'd)

D 2997-01
D 3000-95a

D 3035-01
D 3139-98
D 3261-97
D 3309-96a

D 3517-01
D 3754-01
D 3839-94a
D 3840-01

D 4024-00
D 4161-01

D 5421-00

E 94-00
E 112-96e2
E 114-01
E 125-63 (R1997)
E 155-00
E 165-95
E 186-98
E 213-02
E 272-99
E 280-98
E 310-99
E 446-98
E 709-95

F 336-92
F 423-95
F 437-99
F 438-01
F 439-01
F 441M-99
F 442/F 442M-99
F 491-95
F 492-95
F 493-97

F 546-95
F 599-95
F 781-95

F 1055-98
F 1290-98a
F 1412-01
F 1498-00
F 1545-97
F 1673-95

ASCE Standard

ASCE 7-02

Copyright ASME International
Provided by IHS under license with ASME
No reproduction or networking permitted without license from IHS
Not for Resale

REFERENCE STANDARDS (CONT'D)

ASME Codes

ASME Boiler and Pressure Vessel
Code, 2001 Ed. (A2003)
Section II, Part D
Section V
Section VIII, Div. 1
Section VIII, Div. 2
Section VIII, Div. 3
Section IX

ASME Standards

B1.1-1989 (R2001)
B1.20.1-1983 (R2001)
B1.20.3-1976 (R1998)
B1.20.7-1991 (R1998)

B16.1-1998
B16.3-1999
B16.4-1999
B16.5-1996 (A1998)
B16.9-2001
B16.10-2000
B16.11-2001
B16.14-1991
B16.15-1985 (R1994)
B16.18-2001
B16.20-1998 (A2000)

B16.21-1992
B16.22-2001
B16.24-2001
B16.25-1997
B16.26-1988
B16.28-1994
B16.34-1996 (A1998)
B16.36-1996 (A1998)
B16.39-1998

B16.42-1998
B16.47-1996
B16.48-1997

B18.2.1-1996 (A1999)
B18.2.2-1987 (R1999)

B36.10M-2000
B36.19M-1985 (R1994)

B46.1-2002

API Specifications

5B, 1996
5L, 41st Ed., 1995

API Specifications (Cont'd)

15LE, 3rd Ed., 1995
15LR, 6th Ed., 1990

API Standards

526, 1995
594, 1997
599, 2002
600, 2001

602, 6th Ed., 1998
603, 5th Ed., 2001

608, 2002
609, 4th Ed., 1997

API Recommended Practice

RP 941, 5th Ed., 1997

ASNT Standard

SNT TC-1A-2001

ASQ Standards

Q 9000-1: 1994
Q 9000-2: 1997
Q 9000-3: 1997
Q 9001: 2000
Q 9002: 1994
Q 9003: 1994

AWS Standards

A3.0-2001
A5.1-1991
A5.4-1992
A5.5-1996
A5.9-1993
A5.11-1997
A5.14-1997
A5.22-1995

AWWA Standards

C110-1998
C111-2000
C115-1999
C150-1996

AWWA Standards (Cont'd)

C151-2002
C200-1997
C207-2001
C208-2001
C300-1997
C301-1992
C302-1995
C500-1993 (A1995)

C504-2002
C900-1989
C950-1995

CDA Publication

Copper Tube Handbook, 1995

CGA Publication

G-4.1-1996, 4th Ed.

CSA Publication

Z245.1-1998

EJMA Publication, 8th Ed., 2003

EJMA Standards

MSS Standard Practices

SP-6-2001
SP-9-2001
SP-25-1998

SP-42-1999
SP-43-1991 (R2001)
SP-44-1996
SP-45-2003
SP-51-2003
SP-53-1999
SP-55-2001
SP-58-2002
SP-65-1999
SP-70-1998

SP-71-1997
SP-72-1999
SP-73-1991 (R1996)

Copyright ASME International
Provided by IHS under license with ASME
No reproduction or networking permitted without license from IHS
Not for Resale

REFERENCE STANDARDS (CONT'D)

MSS Standard Practices (Cont'd)

SP-75-1998
SP-79-1999 (A1999)
SP-80-1997
SP-81-2001
SP-83-2001
SP-85-2002
SP-88-1993 (R2001)
SP-95-2000
SP-97-2001
SP-105-1996 (R2001)
SP-119-2003

NACE Publication

Corrosion Data Survey, 1985
MR 0175-97
RP 0170-93 (R1997)
RP 0472-95

NFPA Specification

1963-1998

PFI Standard

ES-7-1994 (R1994/RA2002)

PPI Technical Report

TR-21-1974

SAE Specifications

J 513-1999
J 514-2001
J 518-1993

NOTE:

(1) The issue date shown immediately following the hyphen after the number of the standard (e.g., B16.9-1978, C207-1978, and A 47-77) is the effective date of the issue (edition) of the standard. Any additional number shown following the issue date and prefixed by the letter "R" is the latest date of reaffirmation [e.g., C101-1967 (R1977)]. Any edition number prefixed by the letter "A" is the date of the latest addenda accepted [e.g., B16.36-1975 (A1979)].

Copyright ASME International
Provided by IHS under license with ASME
No reproduction or networking permitted without license from IHS
Not for Resale

Specifications and standards of the following organizations appear in Appendix E:

API American Petroleum Institute
Publications and Distribution Section
1220 L Street, NW
Washington, DC 20005-4070
202 682-8375
www.api.org

ASCE The American Society of Civil Engineers
1801 Alexander Bell Drive
Reston, Virginia 20191-4400
703 295-6300 or 800 548-2723
www.asce.org

ASME ASME International
Three Park Avenue
New York, New York 10016-5990
212 591-8500 or 800 843-2763
www.asme.org

ASME Order Department
22 Law Drive
Box 2900
Fairfield, New Jersey 07007-2300
973 882-1170 or 800 843-2763

ASNT American Society for Nondestructive Testing, Inc.
P.O. Box 28518
1711 Arlingate Lane
Columbus, Ohio 43228-0518
614 274-6003 or 800 222-2768
www.asnt.org

ASQ American Society for Quality
611 East Wisconsin Ave.
Milwaukee, WI 53202
800-248-1946
www.asq.org

ASTM American Society for Testing and Materials
100 Barr Harbor Drive
West Conshohocken, Pennsylvania
19428-2959
610 832-9500
www.astm.org

AWWA American Water Works Association
6666 W. Quincy Avenue
Denver, Colorado 80235
303 794-7711 or 800 926-7337
www.awwa.org

AWS American Welding Society
550 NW LeJeune Road
Miami, Florida 33126
305 443-9353 or 800 443-9353
www.aws.org

CDA Copper Development Association, Inc.
260 Madison Avenue, 16th Floor
New York, New York 10016
212 251-7200 or 800 232-3282
www.copper.org

CGA Compressed Gas Association, Inc.
1725 Jefferson Davis Highway; Suite 1004
Arlington, Virginia 22202-4102
703 412-0900
www.cganet.com

CSA CSA International
178 Rexdale Boulevard
Etobicoke (Toronto), Ontario
M9W 1R3, Canada
416 747-2620 or 800 463-6727
www.csa-international.org

EJMA Expansion Joint Manufacturers Association
25 North Broadway
Tarrytown, New York 10591
914 332-0040
www.ejma.org

MSS Manufacturers Standardization Society of the Valve and Fittings Industry, Inc.
127 Park Street, NE
Vienna, Virginia 22180-4602
703 281-6613
www.mss-hq.com

NACE NACE International
1440 S. Creek Drive
Houston, Texas 77084
281 228-6200
www.nace.org

NFPA National Fire Protection Association
1 Batterymarch Park
Quincy, Massachusetts 02269
617 770-3000 or 800 344-3555
www.nfpa.org

PFI Pipe Fabrication Institute
655-32nd Avenue, Suite 201
Lachine, Quebec H8T3G6
Canada
514 634-3434
www.pfi-institute.org

PPI Plastics Pipe Institute
1801 K Street NW; Suite 600K
Washington, DC 20006-1301
202 974-5318 or 800 541-0736
www.plasticpipe.org

SAE Society of Automotive Engineers
400 Commonwealth Drive
Warrendale, Pennsylvania 15096-0001
724 776-4970 or 800 832-6723
www.sae.org

Copyright ASME International
Provided by IHS under license with ASME
No reproduction or networking permitted without license from IHS Not for Resale

GENERAL NOTE TO LIST OF ORGANIZATIONS: Some of the organizations listed above publish standards that have been approved as American National Standards. Copies of these standards may also be obtained from:

ANSI American National Standards Institute, Inc.
11 West 42nd Street
New York, New York 10036
212 642-4900
www.ansi.org

--`,,```,,,,````-`-`,,`,,`,`,,`---

Copyright ASME International
Provided by IHS under license with ASME
No reproduction or networking permitted without license from IHS Not for Resale

APPENDIX F
PRECAUTIONARY CONSIDERATIONS

(04) ## F300 GENERAL

This Appendix provides guidance in the form of precautionary considerations relating to particular fluid services and piping applications. These are not Code requirements but should be taken into account as applicable in the engineering design. Further information on these subjects can be found in the literature.

F301 DESIGN CONDITIONS

Selection of pressures, temperatures, forces, and other conditions that may apply to the design of piping can be influenced by unusual requirements which should be considered when applicable. These include but are not limited to the following.

F301.4 Ambient Effects

Where fluids can be trapped (e.g., in double seated valves) and subjected to heating and consequent expansion, means of pressure relief should be considered to avoid excessive pressure buildup.

F301.5 Dynamic Effects

geysering: an effect that can occur in piping handling fluids at or near their boiling temperatures under conditions when rapid evolution of vapor within the piping causes rapid expulsion of liquid. In such cases a pressure surge can be generated that may be destructive to the piping. (Geysering usually is associated with vertical pipelines but may occur in inclined lines under certain conditions.)

F301.7 Thermal Expansion and Contraction Effects

bowing during cooldown: an effect that can occur, usually in horizontal piping, on introduction of a fluid at or near its boiling temperature and at a flow rate that allows stratified two-phase flow, causing large circumferential temperature gradients and possibly unacceptable stresses at anchors, supports, guides, and within pipe walls. (Two-phase flow can also generate excessive pressure oscillations and surges that may damage the piping.)

F301.10 Thermal Fatigue at Mixing Points

Consideration should be given to the potential for thermal fatigue on surfaces exposed to the fluid when mixing fluids of different temperatures (e.g., cold droplets impinging on the pipe wall of a hot gas stream).

F301.11 Condensation Effects

Where there is a possibility of condensation occurring inside gaseous fluid piping, means should be considered to provide drainage from low areas to avoid damage from water hammer or corrosion.

F304 PRESSURE DESIGN

F304.7 Pressure Design of Other Metallic Components

F304.7.4 Expansion Joints. The following are specific considerations to be evaluated by the designer when specifying expansion joint requirements, in addition to the guidelines given in EJMA Standards:

(a) susceptibility to stress corrosion cracking of the materials of construction, considering specific alloy content, method of manufacture, and final heat treated condition.

(b) consideration of not only the properties of the flowing medium but also the environment external to the expansion joint and the possibility of condensation or ice formation due to the operation of the bellows at a reduced temperature.

(c) consideration of specifying a minimum bellows or ply thickness. The designer is cautioned that requiring excessive bellows thickness may reduce the fatigue life of the expansion joint and increase end reactions.

(d) accessibility of the expansion joint for maintenance and inspection.

(e) need for leak tightness criteria for mechanical seals on slip type joints.

(f) specification of installation procedures and shipping or preset bars so that the expansion joint will not be extended, compressed, or offset to compensate for improper alignment of piping, other than the intentional offset specified by the piping designer.

(g) need to request data from the expansion joint manufacturer, including

(1) effective thrust area

(2) lateral, axial, and rotational stiffness (spring constant)

(3) calculated design cycle life under specified design conditions

(4) friction force in hinges, tie rods, etc.

(5) installed length and weight

(6) requirements for additional support or restraint in the piping

Copyright ASME International
Provided by IHS under license with ASME
No reproduction or networking permitted without license from IHS
Not for Resale

(7) expansion joint elements that are designed to be uninsulated during operation

(8) certification of pressure containing and/or restraining materials of construction

(9) maximum test pressure

(10) design calculations

F307 VALVES

(a) Extended bonnet valves are recommended where necessary to establish a temperature differential between the valve stem packing and the fluid in the piping, to avoid packing leakage and external icing or other heat flux problems. The valve should be positioned to provide this temperature differential. Consideration should be given to possible packing shrinkage in low temperature fluid service.

(b) The effect of external loads on valve operability and leak tightness should be considered.

F308 FLANGES AND GASKETS

F308.2 Specific Flanges

Slip-On Flanges. The need for venting the space between the welds in double-welded slip-on flanges should be considered for fluid services (including vacuum) that require leak testing of the inner fillet weld, or when fluid handled can diffuse into the enclosed space, resulting in possible failure.

F308.4 Gaskets

(a) Gasket materials not subject to cold flow should be considered for use with raised face flanges for fluid services at elevated pressures with temperatures significantly above or below ambient.

(b) Use of full face gaskets with flat faced flanges should be considered when using gasket materials subject to cold flow for low pressure and vacuum services at moderate temperatures. When such gasket materials are used in other fluid services, the use of tongue-and-groove or other gasket-confining flange facings should be considered.

(c) The effect of flange facing finish should be considered in gasket material selection.

F309 BOLTING

F309.1 General

The use of controlled bolting procedures should be considered in high, low, and cycling temperature services, and under conditions involving vibration or fatigue, to reduce

(a) the potential for joint leakage due to differential thermal expansion

(b) the possibility of stress relaxation and loss of bolt tension

F312 FLANGED JOINTS

F312.1 General

Three distinct elements of a flanged joint must act together to provide a leak-free joint: the flanges, the gasket, and the bolting. Factors that affect performance include:

(a) Selection and Design

(1) consideration of service conditions (including external loads, bending moments, and application of thermal insulation)

(2) flange rating, type, material, facing, and facing finish (see para. F308.2)

(3) gasket type, material, thickness, and design (see para. F308.4)

(4) bolt material, strength (cold and at temperature), and specifications for tightening of bolts (see para. F309.1)

(5) design for access to the joint

(b) Installation

(1) condition of flange mating surfaces

(2) joint alignment and gasket placement before boltup

(3) implementation of specified bolting procedures

F321 PIPING SUPPORT

F321.4 Wear of Piping at Support Points

The use of pads or other means of pipe attachment at support points should be considered for piping systems subject to wear and pipe wall metal loss from relative movement between the pipe and its supports (e.g., from wave action on offshore production applications).

F322 DESIGN CONSIDERATIONS FOR SPECIFIC SYSTEMS

F322.6 Pressure Relief Piping

Stop Valves in Pressure Relief Piping. If stop valves are located in pressure relief piping in accordance with para. 322.6.1(a), and if any of these stop valves are to be closed while the equipment is in operation, an authorized person should be present. The authorized person should remain in attendance at a location where the operating pressure can be observed and should have access to means for relieving the system pressure in the event of overpressure. Before leaving the station the authorized person should lock or seal the stop valves in the open position.

Copyright ASME International
Provided by IHS under license with ASME
No reproduction or networking permitted without license from IHS Not for Resale

F323 MATERIALS

(a) Selection of materials to resist deterioration in service is not within the scope of this Code. However, suitable materials should be specified or selected for use in piping and associated facilities not covered by this Code but which affect the safety of the piping. Consideration should be given to allowances made for temperature and pressure effects of process reactions, for properties of reaction or decomposition products, and for hazards from instability of contained fluids. Consideration should be given to the use of cladding, lining, or other protective materials to reduce the effects of corrosion, erosion, and abrasion.

(b) Information on material performance in corrosive environments can be found in publications, such as "The Corrosion Data Survey" published by the National Association of Corrosion Engineers.

F323.1 General Considerations

Following are some general considerations which should be evaluated when selecting and applying materials in piping (see also para. FA323.4):

(a) the possibility of exposure of the piping to fire and the melting point, degradation temperature, loss of strength at elevated temperature, and combustibility of the piping material under such exposure;

(b) the susceptibility to brittle failure or failure from thermal shock of the piping material when exposed to fire or to fire-fighting measures, and possible hazards from fragmentation of the material in the event of failure;

(c) the ability of thermal insulation to protect piping against failure under fire exposure (e.g., its stability, fire resistance, and ability to remain in place during a fire);

(d) the susceptibility of the piping material to crevice corrosion under backing rings, in threaded joints, in socket welded joints, and in other stagnant, confined areas;

(e) the possibility of adverse electrolytic effects if the metal is subject to contact with a dissimilar metal;

(f) the compatibility of lubricants or sealants used on threads with the fluid service;

(g) the compatibility of packing, seals, and O-rings with the fluid service;

(h) the compatibility of materials, such as cements, solvents, solders, and brazing materials, with the fluid service;

(i) the chilling effect of sudden loss of pressure on highly volatile fluids as a factor in determining the lowest expected service temperature;

(j) the possibility of pipe support failure resulting from exposure to low temperatures (which may embrittle the supports) or high temperatures (which may weaken them);

(k) the compatibility of materials, including sealants, gaskets, lubricants, and insulation, used in strong oxidizer fluid service (e.g., oxygen or fluorine).

F323.4 Specific Material Considerations — Metals

Following are some specific considerations which should be evaluated when applying certain metals in piping.

(a) Irons — Cast, Malleable, and High Silicon (14.5%). Their lack of ductility and their sensitivity to thermal and mechanical shock.

(b) Carbon Steel, and Low and Intermediate Alloy Steels

(1) the possibility of embrittlement when handling alkaline or strong caustic fluids

(2) the possible conversion of carbides to graphite during long time exposure to temperatures above 427°C (800°F) of carbon steels, plain nickel steel, carbon-manganese steel, manganese-vanadium steel, and carbon-silicon steel

(3) the possible conversion of carbides to graphite during long time exposure to temperatures above 468°C (875°F) of carbon-molybdenum steel, manganese-molybdenum-vanadium steel, and chromium-vanadium steel

(4) the advantages of silicon-killed carbon steel (0.1% silicon minimum) for temperatures above 482°C (900°F)

(5) the possibility of damage due to hydrogen exposure at elevated temperature (see API RP 941); hydrogen damage (blistering) may occur at lower temperatures under exposure to aqueous acid solutions;[1]

(6) the possibility of stress corrosion cracking when exposed to cyanides, acids, acid salts, or wet hydrogen sulfide; a maximum hardness limit is usually specified (see NACE MR0175 and RP0472);[1] (04)

(7) the possibility of sulfidation in the presence of hydrogen sulfide at elevated temperatures.

(c) High Alloy (Stainless) Steels

(1) the possibility of stress corrosion cracking of austenitic stainless steels exposed to media such as chlorides and other halides either internally or externally; the latter can result from improper selection or application of thermal insulation, or from use of marking inks, paints, labels, tapes, adhesives, and other accessory materials containing chlorides or other halides

(2) the susceptibility to intergranular corrosion of austenitic stainless steels sensitized by exposure to temperatures between 427°C and 871°C (800°F and 1600°F); as an example, stress corrosion cracking of sensitized metal at room temperature by polythionic acid (reaction (04)

[1] Titles of referenced documents are:
API RP 941, Steels for Hydrogen Service at Elevated Temperatures and Pressures in Petroleum Refineries and Petrochemical Plants
NACE MR0175, Sulfide Stress-Cracking Resistant Metallic Materials for Oil Field Equipment
NACE RP0472, Methods and Controls to Prevent In-Service Cracking of Carbon Steel (P-1) Welds in Corrosive Petroleum Refining Environments
NACE RP0170, Protection of Austenitic Stainless Steel in Refineries Against Stress Corrosion Cracking by Use of Neutralizing Solutions During Shutdown

Copyright ASME International
Provided by IHS under license with ASME
No reproduction or networking permitted without license from IHS
Not for Resale

of oxidizable sulfur compound, water, and air); stabilized or low carbon grades may provide improved resistance (see NACE RP0170);[1]

(3) the susceptibility to intercrystalline attack of austenitic stainless steels on contact with liquid metals (including aluminum, antimony, bismuth, cadmium, gallium, lead, magnesium, tin, and zinc) or their compounds

(4) the brittleness of ferritic stainless steels at room temperature after service at temperature above 371°C (700°F)

(d) Nickel and Nickel Base Alloys

(1) the susceptibility to grain boundary attack of nickel and nickel base alloys not containing chromium when exposed to small quantities of sulfur at temperatures above 316°C (600°F)

(2) the susceptibility to grain boundary attack of nickel base alloys containing chromium at temperatures above 593°C (1100°F) under reducing conditions and above 760°C (1400°F) under oxidizing conditions

(3) the possibility of stress corrosion cracking of nickel-copper Alloy 400 in hydrofluoric acid vapor in the presence of air, if the alloy is highly stressed (including residual stresses from forming or welding).

(e) Aluminum and Aluminum Alloys

(1) the compatibility with aluminum of thread compounds used in aluminum threaded joints to prevent seizing and galling

(2) the possibility of corrosion from concrete, mortar, lime, plaster, or other alkaline materials used in buildings or structures

(3) the susceptibility of Alloy Nos. 5083, 5086, 5154, and 5456 to exfoliation or intergranular attack; and the upper temperature limit of 66°C (150°F) shown in Appendix A to avoid such deterioration

(f) Copper and Copper Alloys

(1) the possibility of dezincification of brass alloys

(2) the susceptibility to stress-corrosion cracking of copper-based alloys exposed to fluids such as ammonia or ammonium compounds

(3) the possibility of unstable acetylide formation when exposed to acetylene

(g) Titanium and Titanium Alloys. The possibility of deterioration of titanium and its alloys above 316°C (600°F).

(h) Zirconium and Zirconium Alloys. The possibility of deterioration of zirconium and zirconium alloys above 316°C (600°F).

(i) Tantalum. Above 299°C (570°F), the possibility of reactivity of tantalum with all gases except the inert gases. Below 299°C, the possibility of embrittlement of tantalum by nascent (monatomic) hydrogen (but not molecular hydrogen). Nascent hydrogen is produced by galvanic action, or as a product of corrosion by certain chemicals.

(j) Metals With Enhanced Properties. The possible loss of strength, in a material whose properties have been enhanced by heat treatment, during long-continued exposure to temperatures above its tempering temperature.

(k) The desirability of specifying some degree of production impact testing, in addition to the weld procedure qualification tests, when using materials with limited low temperature service experience below the minimum temperature stated in Table A-1.

F331 HEAT TREATMENT

F331.1 Heat Treatment Considerations

Heat treatment temperatures listed in Table 331.1.1 for some P-No. 4 and P-No. 5 materials may be higher than the minimum tempering temperatures specified in the ASTM specifications for the base material. For higher-strength normalized and tempered materials, there is consequently a possibility of reducing tensile properties of the base material, particularly if long holding times at the higher temperatures are used.

F335 ASSEMBLY AND ERECTION

F335.9 Cleaning of Piping

Following are some general considerations which may be evaluated in determining the need for cleaning of piping:

(a) requirements of the service, including possible contaminants and corrosion products during fabrication, assembly, storage, erection, and testing.

(b) for low temperature service, removal of moisture, oil, grease, and other contaminants to prevent sticking of valves or blockage of piping and small cavities.

(c) for strong oxidizer fluid service (e.g., oxygen or fluorine), special cleaning and inspection. Reference may be made to the Compressed Gas Association's Pamphlet G-4.1 Cleaning Equipment for Oxygen Service.

F345.4.1 Test Fluid. Consideration should be given to susceptibility to microbiologically influenced corrosion (MIC). This condition is especially prevalent in no-flow, high moisture environments. Internal MIC may also depend on the characteristics of the treated or untreated test fluid. **(04)**

Internal MIC may be lessened or possibly eliminated by properly draining and drying systems and/or by proper selection of test fluid.

FA323.4 Material Considerations — Nonmetals

Following are some considerations to be evaluated when applying nonmetals in piping. See also paras. F323 and F323.1.

(a) Static Charges. Because of the possibility of producing hazardous electrostatic charges in nonmetallic

Copyright ASME International
Provided by IHS under license with ASME
No reproduction or networking permitted without license from IHS
Not for Resale

piping and metallic piping lined with nonmetals, consideration should be given to grounding the metallic components of such systems conveying nonconductive fluids.

(b) Thermoplastics. If thermoplastic piping is used above ground for compressed air or other compressed gases, special precautions should be observed. In determining the needed safeguarding for such services, the energetics and the specific failure mechanism need to be evaluated. Encasement of the plastic piping in shatter-resistant material may be considered.

(c) Borosilicate Glass. Take into account its lack of ductility and its sensitivity to thermal and mechanical shock.

Copyright ASME International
Provided by IHS under license with ASME
No reproduction or networking permitted without license from IHS Not for Resale

APPENDIX G
SAFEGUARDING

G300 SCOPE

(a) Safeguarding is the provision of protective measures to minimize the risk of accidental damage to the piping or to minimize the harmful consequences of possible piping failure.

(b) In most instances, the safeguarding inherent in the facility (the piping, the plant layout, and its operating practices) is sufficient without need for additional safeguarding. In some instances, however, engineered safeguards must be provided.

(c) Appendix G outlines some considerations pertaining to the selection and utilization of safeguarding. Where safeguarding is required by the Code, it is necessary to consider only the safeguarding that will be suitable and effective for the purposes and functions stated in the Code or evident from the designer's analysis of the application.

G300.1 General Considerations

In evaluating a piping installation design to determine what safeguarding may exist or is necessary, the following should be reviewed:

(a) the hazardous properties of the fluid, considered under the most severe combination of temperature, pressure, and composition in the range of expected operating conditions.

(b) the quantity of fluid which could be released by piping failure, considered in relation to the environment, recognizing the possible hazards ranging from large releases of otherwise innocuous fluids to small leakages of toxic fluids.

(c) expected conditions in the environment, evaluated for their possible effect on the hazards caused by a possible piping failure. This includes consideration of ambient or surface temperature extremes, degree of ventilation, proximity of fired equipment, etc.

(d) the probable extent of operating, maintenance, and other personnel exposure, as well as reasonably probable sources of damage to the piping from direct or indirect causes.

(e) the probable need for grounding of static charges to prevent ignition of flammable vapors.

(f) the safety inherent in the piping by virtue of materials of construction, methods of joining, and history of service reliability.

G300.2 Safeguarding by Plant Layout and Operation

Representative features of plant layout and operation which may be evaluated and selectively utilized as safeguarding include

(a) plant layout features, such as open-air process equipment structures; spacing and isolation of hazardous areas; slope and drainage; buffer areas between plant operations and populated communities; or control over plant access

(b) protective installations, such as fire protection systems; barricades or shields; ventilation to remove corrosive or flammable vapors; instruments for remote monitoring and control; containment and/or recovery facilities; or facilities (e.g., incinerators) for emergency disposal of hazardous materials

(c) operating practices, such as restricted access to processing areas; work permit system for hazardous work; or special training for operating, maintenance, and emergency crews

(d) means for safe discharge of fluids released during pressure relief device operation, blowdown, cleanout, etc.

(e) procedures for startup, shutdown, and management of operating conditions, such as gradual pressurization or depressurization, and gradual warmup or cooldown, to minimize the possibility of piping failure, e.g., brittle fracture

G300.3 Engineered Safeguards

Engineered safeguards which may be evaluated and selectively applied to provide added safeguarding include

(a) means to protect piping against possible failures, such as

(1) thermal insulation, shields, or process controls to protect from excessively high or low temperature and thermal shock

(2) armor, guards, barricades, or other protection from mechanical abuse

(3) damping or stabilization of process or fluid flow dynamics to eliminate or to minimize or protect against destructive loads (e.g., severe vibration pulsations, cyclic operating conditions)

Copyright ASME International
Provided by IHS under license with ASME
No reproduction or networking permitted without license from IHS
Not for Resale

(b) means to protect people and property against harmful consequences of possible piping failure, such as confining and safely disposing of escaped fluid by shields for flanged joints, valve bonnets, gages, or sight glasses; or for the entire piping system if of frangible material; limiting the quantity or rate of fluid escaping by automatic shutoff or excess flow valves, additional block valves, flow-limiting orifices, or automatic shutdown of pressure source; limiting the quantity of fluid in process at any time, where feasible.

Copyright ASME International
Provided by IHS under license with ASME
No reproduction or networking permitted without license from IHS Not for Resale

APPENDIX H
SAMPLE CALCULATIONS FOR BRANCH REINFORCEMENT

H300 INTRODUCTION

The following examples are intended to illustrate the application of the rules and definitions in para. 304.3.3 for welded branch connections. (No metric equivalents are given.)

H301 EXAMPLE 1

An NPS 8 run (header) in an oil piping system has an NPS 4 branch at right angles (see Fig. H301). Both pipes are Schedule 40 API 5L Grade A seamless. The design conditions are 300 psig at 400°F. The fillet welds at the crotch are minimum size in accordance with para. 328.5.4. A corrosion allowance of 0.10 in. is specified. Is additional reinforcement necessary?

Solution

From Appendix A, $S = 16.0$ ksi for API 5L Grade A (Table A-1); $E = 1.00$ for API 5L seamless (Table A-1B).

$$T_h = 0.322\,(0.875) = 0.282 \text{ in.}$$

$$T_b = 0.237\,(0.875) = 0.207 \text{ in.}$$

$$L_4 = 2.5\,(0.282 - 0.1) = 0.455 \text{ in.}$$
or $2.5\,(0.207 - 0.1) + 0 = 0.268$ in., whichever is less
$$= 0.268 \text{ in.}$$

$$d_1 = [4.5 - 2\,(0.207 - 0.1)]/\sin 90 \text{ deg} = 4.286 \text{ in.}$$

$$d_2 = (0.207 - 0.1) + (0.282 - 0.1) + 4.286/2 = 2.432 \text{ in.}$$

Use d_1 or d_2, whichever is greater.

$$d_1 = 4.286 \text{ in.}$$

$$t_h = \frac{300\,(8.625)}{2(16{,}000)\,(1.00) + 2(0.4)\,(300)} = 0.080 \text{ in.}$$

$$t_b = \frac{300\,(4.500)}{2(16{,}000)\,(1.00) + 2(0.4)\,(300)} = 0.042 \text{ in.}$$

$$t_c = 0.7\,(0.237) = 0.166 \text{ in., or } 0.25\text{, whichever is less}$$
$$= 0.166 \text{ in.}$$

Minimum leg dimension

$$\text{of fillet weld} = 0.166/0.707 = 0.235 \text{ in.}$$

Thus, the required area

$$A_1 = 0.080\,(4.286)\,(2 - \sin 90 \text{ deg}) = 0.343 \text{ sq in.}$$

The reinforcement area in run wall

$$A_2 = 4.286\,(0.282 - 0.08 - 0.10) = 0.437 \text{ sq in.}$$

in branch wall

$$A_3 = 2(0.268)\,[(0.207 - 0.042) - 0.10] = 0.035 \text{ sq in.}$$

in branch welds

$$A_4 = 2(1/2)\,(0.235)^2 = 0.055 \text{ sq in.}$$

$$\text{The total reinforcement area} = 0.527 \text{ sq in.}$$

This is more than 0.343 sq in. so that no additional reinforcement is required to sustain the internal pressure.

H302 EXAMPLE 2

There is an NPS 8 branch at right angles to an NPS 12 header (Fig. H301). Both run and branch are of aluminum alloy Schedule 80 ASTM B 241 6061-T6 seamless pipe. The connection is reinforced by a ring 14 in. O.D. (measured along the run) cut from a piece of NPS 12 Schedule 80 ASTM B 241 6063-T6 seamless pipe and opened slightly to fit over the run pipe. Allowable stresses for welded construction apply in accordance with Appendix A, Note (33). The fillet welds have the minimum dimensions permitted in para. 328.5.4. A zero corrosion allowance is specified. What is the maximum permissible design pressure if the design temperature is −320°F?

Solution

From Table A-1, $S = 8.0$ ksi for Grade 6061-T6 (welded) pipe and $S = 5.7$ ksi for Grade 6063-T6 (welded) pad, both at −320°F. From Table A-1B, $E = 1.00$ for ASTM B 241.

Leg dimensions of welds

Copyright ASME International
Provided by IHS under license with ASME
No reproduction or networking permitted without license from IHS
Not for Resale

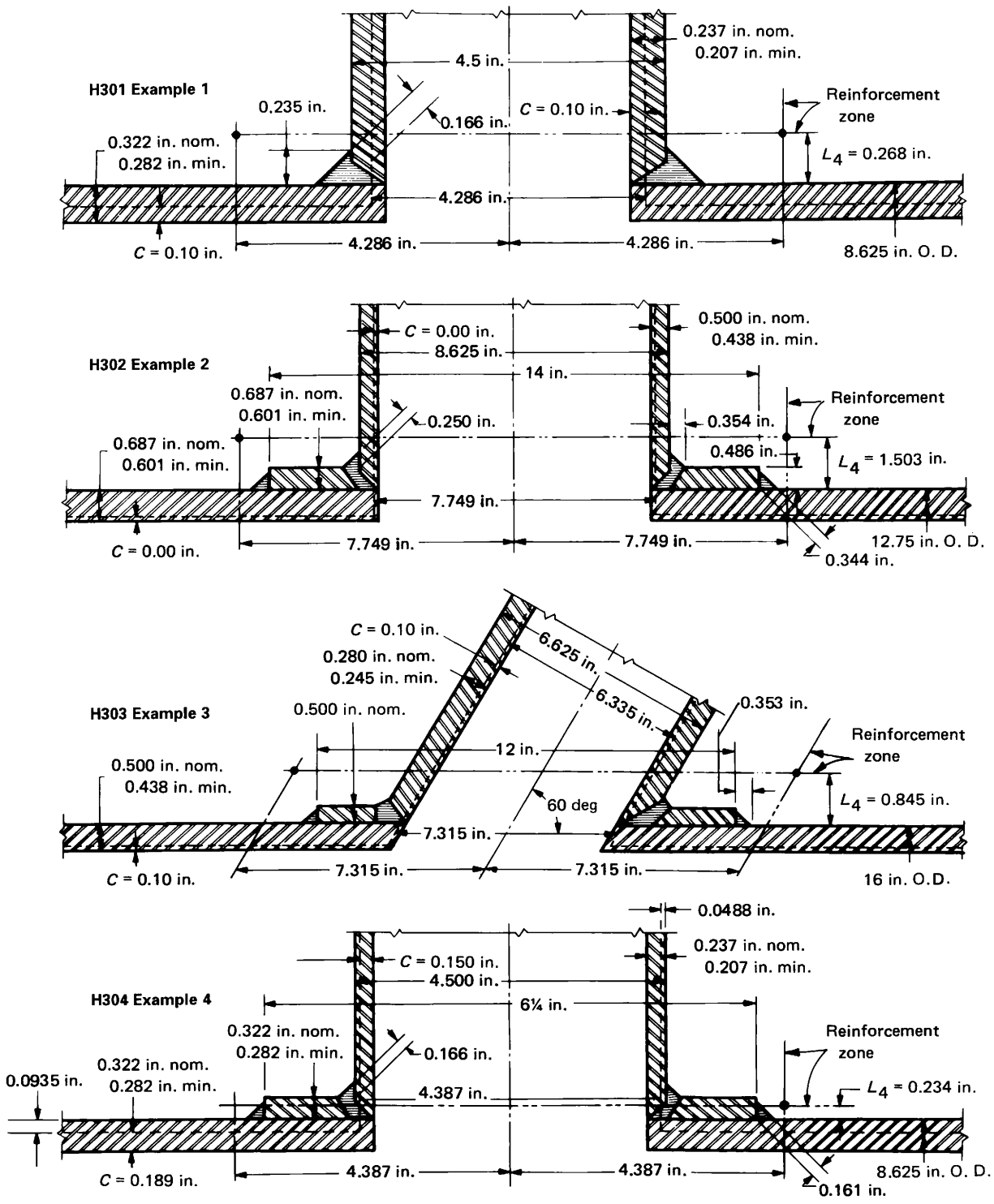

Fig. H301 Illustrations for Examples in Appendix H

Copyright ASME International
Provided by IHS under license with ASME
No reproduction or networking permitted without license from IHS
Not for Resale

$$\frac{t_c}{0.707} = \frac{0.250}{0.707} = 0.354 \text{ in.}$$

$$\frac{0.5\,(0.687)}{0.707} = 0.486 \text{ in.}$$

$$T_h = 0.687\,(0.875) = 0.601 \text{ in.}$$

$$T_b = 0.500\,(0.875) = 0.438 \text{ in.}$$

$$T_r = 0.687\,(0.875) = 0.601 \text{ in.}$$

$$L_4 = 2.5\,(0.601 - 0.00) = 1.503 \text{ in.}$$

[This is smaller than 2.5 (0.438 − 0.00) + 0.601 = 1.695 in.]

$$d_2 = \mathrm{d}_1 = 8.625 - 2(0.438 - 0.00) = 7.749 \text{ in.}$$

$$t_h = \frac{12.75P}{2(8000)\,(1.00) + 2(0.4)\,(P)}$$

$$t_b = \frac{8.625P}{2(8000)\,(1.00) + 2(0.4)\,(P)}$$

Using the symbol

$$q = \frac{P}{16{,}000 + 0.8P}$$

we can briefly write

$$t_h = 12.75q \text{ and } t_b = 8.625q$$

The required area

$$A_1 = 7.749t_h = 98.80q$$

The reinforcement area in run wall

$$A_2 = 7.749\,(0.601 - 12.75q - 0.00)$$

$$= 4.657 - 98.80q$$

in branch wall

$$A_3 = 2(1.503)\,(0.438 - 8.625q - 0.00)$$

$$= 1.317 - 25.93q$$

in ring

$$A_4 = 0.601\,(14 - 8.625)\,(5700/8000) = 2.302$$

in fillet welds

$$A_4 = 2(1/2)\,(0.354)^2 + 2(1/2)\,(0.486)^2 = 0.362$$

$$\text{The total reinforcement area} = 8.638 - 124.73q$$

At the maximum permissible normal operating pressure, the required area and the reinforcement area are equal; thus:

$$98.80q = 8.638 - 124.73q$$

$$223.53q = 8.638$$

$$q = 0.0386$$

But also

$$q = \frac{P}{16{,}000 + 0.8P}$$

Thus

$$P = 0.0386\,(16{,}000 + 0.8P) = 618.3 + 0.0309P$$

$$0.961P = 618.3$$

$$P = 643.1 \text{ psig}$$

which is the maximum permissible design pressure.

H303 EXAMPLE 3

An NPS 6 Schedule 40 branch has its axis at a 60 deg angle to the axis of an NPS 16 Schedule 40 run (header) in an oil piping system (Fig. H301). Both pipes are API 5L Grade A seamless. The connection is reinforced with a ring 12 in. O.D. (measured along the run) made from 1/2 in. ASTM A 285 Grade C plate. All fillet welds are equivalent to 45 deg fillet welds with 3/8 in. legs. Corrosion allowance = 0.10 in. The design pressure is 500 psig at 700°F. Is the design adequate for the internal pressure?

Solution

From Appendix A, $S = 14.4$ ksi for API 5L Grade A and ASTM A 285 Grade C (Table A-1); $E = 1.00$ for API 5L seamless (Table A-1B).

$$T_h = 0.500\,(0.875) = 0.438 \text{ in.}$$

$$T_b = 0.280\,(0.875) = 0.245 \text{ in.}$$

$$T_r = 0.500 \text{ in.}$$

$$L_4 = 2.5\,(0.245 - 0.10) + 0.500 = 0.8625$$

This is greater than 2.5 (0.438 − 0.10) = 0.845 in.

$$t_h = \frac{500\,(16)}{2(14{,}400)\,(1.00) + 2(0.4)\,(500)} = 0.274 \text{ in.}$$

$$t_b = \frac{500\,(6.625)}{2(14{,}400)\,(1.00) + 2(0.4)\,(500)} = 0.113 \text{ in.}$$

$$d_2 = d_1 = \frac{6.625 - 2(0.245 - 0.10)}{\sin 60 \text{ deg}} = \frac{6.335}{0.866} = 7.315 \text{ in.}$$

The required area

$$A_1 = (0.274)\,(7.315)\,(2 - 0.866) = 2.27 \text{ sq in.}$$

Copyright ASME International
Provided by IHS under license with ASME
No reproduction or networking permitted without license from IHS
Not for Resale

The reinforcement area in run wall

$$A_2 = 7.315\,(0.438 - 0.274 - 0.10) = 0.468 \text{ sq in.}$$

in branch wall

$$A_3 = 2\left(\frac{0.845}{0.866}\right)(0.245 - 0.113 - 0.10) = 0.062 \text{ sq in.}$$

in ring

$$A_4 = 0.500\left(12 - \frac{6.625}{0.866}\right) = 2.175 \text{ sq in.}$$

in fillet welds

$$A_4 = 4(1/2)(3/8)^2 = 0.281 \text{ sq in.}$$

$$\text{The total reinforcement area} = 2.986 \text{ sq in.}$$

This total is greater than 2.27 sq in., so that no additional reinforcement is required.

H304 EXAMPLE 4

An NPS 8 run (header) in an oil piping system has an NPS 4 branch at right angles (Fig. H301). Both pipes are Schedule 40 API 5L Grade A seamless. The design conditions are 350 psig at 400°F. It is assumed that the piping system is to remain in service until all metal thickness, in both branch and run, in excess of that required by Eq. (3a) of para. 304.1.2 has corroded away so that area A_2 as defined in para. 304.3.3(c)(1) is zero. What reinforcement is required for this connection?

Solution

From Appendix A, $S = 16.0$ ksi for API 5L Grade A (Table A-1); $E = 1.00$ for API 5L seamless (Table A-1B).

$$t_h = \frac{350\,(8.625)}{2(16{,}000)\,(1.00) + 2(0.4)\,(350)} = 0.0935 \text{ in.}$$

$$t_b = \frac{350\,(4.500)}{2(16{,}000)\,(1.00) + 2(0.4)\,(350)} = 0.0488 \text{ in.}$$

$$d_1 = 4.500 - 2(0.0488) = 4.402 \text{ in.}$$

Required reinforcement area

$$A_1 = 0.0935\,(4.402) = 0.412 \text{ sq in.}$$

Try fillet welds only.

$$L_4 = 2.5(0.0935) = 0.234 \text{ in.},$$

$$\text{or } 2.5(0.0488) = 0.122 \text{ in.}$$

Use 0.122 in.

Due to limitation in the height at the reinforcement zone, no practical fillet weld size will supply enough reinforcement area; therefore, the connection must be further reinforced. Try a $6\frac{1}{4}$ in. O.D. reinforcing ring (measured along the run). Assume the ring to be cut from a piece of NPS 8 Schedule 40 API 5L Grade A seamless pipe and welded to the connection with minimum size fillet welds.

Minimum ring thickness

$$T_r = 0.322(0.875) = 0.282 \text{ in.}$$

$$\text{New } L_4 = 2.5(0.0488) + 0.282 = 0.404 \text{ in.},$$

$$\text{or } 2.5(0.0935) = 0.234 \text{ in.}$$

Use 0.234 in.

Reinforcement area in the ring (considering only the thickness within L_4)

$$X_1 = 0.234\,(6.25 - 4.5) = 0.410 \text{ sq in.}$$

$$\text{Leg dimension of weld} = \frac{0.5(0.322)}{0.707} = 0.228 \text{ in.}$$

Reinforcement area in fillet welds

$$X_2 = 2(1/2)\,(0.228)^2 = 0.052 \text{ sq in.}$$

Total reinforcement area

$$A_4 = X_1 + X_2 = 0.462 \text{ sq in.}$$

This total reinforcement area is greater than the required area; therefore, a reinforcing ring $6\frac{1}{4}$ in. O.D., cut from a piece of NPS 8 Schedule 40 API 5L Grade A seamless pipe and welded to the connection with minimum size fillet welds would provide adequate reinforcement for this connection.

H305 EXAMPLE 5 (Not Illustrated)

An NPS $1\frac{1}{2}$ 3000 lb forged steel socket welding coupling has been welded at right angles to an NPS 8 Schedule 40 run (header) in oil service, using a weld conforming to sketch (1) of Fig. 328.5.4D. The run is ASTM A 53 Grade B seamless pipe. The design pressure is 400 psi and the design temperature is 450°F. The corrosion allowance is 0.10 in. Is additional reinforcement required?

Solution

No. According to para. 304.3.2(b) the design is adequate to sustain the internal pressure and no calculations are necessary. It is presumed, of course, that calculations have shown the run pipe to be satisfactory for the service conditions according to Eqs. (2) and (3).

Copyright ASME International
Provided by IHS under license with ASME
No reproduction or networking permitted without license from IHS
Not for Resale

APPENDIX J
NOMENCLATURE

(04)

Symbol	Definition	Units [Note (1)]		Reference		
		SI	U.S.	Paragraph	Table/Fig./App.	Equation
A	Factor for determining minimum value of R_1	...	...	304.2.3	...	(5)
A_p	Cross sectional area of pipe	mm^2	$in.^2$	P319.4.4	...	(P17a) (P17b)
A_1	Area required for branch reinforcement	mm^2	$in.^2$	304.3.3 304.3.4	304.3.3 304.3.4 H300	(6) (9)
A_2	Area available for branch reinforcement in run pipe	mm^2	$in.^2$	304.3.3 304.3.4	304.3.3 304.3.4 H300	(7) (10)
A_3	Area available for branch reinforcement in branch pipe	mm^2	$in.^2$	304.3.3 304.3.4	304.3.3 304.3.4 H300	(8) (11)
A_4	Area available for branch reinforcement in pad or connection	mm^2	$in.^2$	304.3.3 304.3.4	304.3.3 304.3.4 H300	(12)
c	Sum of mechanical allowances (thread or groove depth) plus corrosion and erosion allowances	mm	in.	302.3.5 302.4 304.1.1 304.2.3 304.4.1 304.5.2 304.5.3 A304.1.1 H300 K302.3.5 K304.1.1 K304.1.2 K304.5.2 K304.8.4	304.3.3 304.3.4 328.5.5 H301	(2) (4a) (4b) (4c) (7) (8) (13) (14) (15) (25) (33) (36) (37)
c_i	Sum of internal allowances	mm	in.	K304.1.1 K304.1.2	...	(34b) (35a) (35b)
c_o	Sum of external allowances	mm	in.	K304.1.1 K304.1.2	...	(34a) (35a) (35b)
C	Cold spring factor	...	...	319.5.1	...	(22) (23)
C	Material constant used in computing Larson-Miller parameter	...	...	V303.1.3 V303.1.4	...	(V2) (V3)
C_x	Size of fillet weld, socket welds other than flanges	mm	in.	...	328.5.2C	...
C_1	Estimated self-spring or relaxation factor	...	...	319.5.1	...	(23)

Copyright ASME International
Provided by IHS under license with ASME
No reproduction or networking permitted without license from IHS
Not for Resale

Symbol	Definition	Units [Note (1)] SI	Units [Note (1)] U.S.	Reference Paragraph	Reference Table/Fig./App.	Reference Equation
D	Outside diameter of pipe as listed in tables of standards and specifications or as measured	mm	in.	304.1.1 304.1.2 304.1.3 319.4.1 A304.1.1 A328.2.5 K304.1.1 K304.1.2 K304.1.3 K304.8.4	304.1.1 304.2.3	(3a) (3b) (3c) (5) (16) (26) (27) (34a) (35a) (37)
D_b	Outside diameter of branch pipe	mm	in.	304.3.4	304.3.3 304.3.4 D300	. . .
D_h	Outside diameter of header pipe	mm	in.	304.3.3 304.3.4	304.3.3 304.3.4	. . .
d	Inside diameter of pipe (note differences in definition between paras. 304.1.1 and K304.1.1)	mm	in.	304.1.1 K304.1.1 K304.1.2	. . .	(34b) (35b)
d_b	Inside diameter of branch pipe	mm	in.	304.3.4	304.3.4	. . .
d_g	Inside or pitch diameter of gasket	mm	in.	304.5.3	304.5.3	(15)
d_h	Inside diameter of header pipe	mm	in.	304.3.4	304.3.4	. . .
d_x	Design inside diameter of extruded outlet	mm	in.	304.3.4	304.3.4	(9) (10)
d_1	Effective length removed from pipe at branch	mm	in.	304.3.3 H300	304.3.3	(6) (7)
d_2	Half-width of reinforcement zone	mm	in.	304.3.3 304.3.4 H300	304.3.3 304.3.4	(7)
E	Quality factor	. . .	. . .	302.3.1 304.1.1 304.1.2 304.2.3 304.3.3 304.4.1 304.5.1 304.5.2 304.5.3 305.2.3 306.1.3	H300	(3a) (3b) (3c) (4a) (4b) (4c) (15)
E	Modulus of elasticity (at specified condition)	MPa	ksi	A319.3.2	App. C D300	. . .
E_a	Reference modulus of elasticity at 21°C (70°F)	MPa	ksi	319.3.2 319.4.4 319.5 319.5.1 P319.5	. . .	(22) (23)

Copyright ASME International
Provided by IHS under license with ASME
No reproduction or networking permitted without license from IHS
Not for Resale

Symbol	Definition	Units [Note (1)] SI	Units [Note (1)] U.S.	Reference Paragraph	Reference Table/Fig./App.	Reference Equation
E_c	Casting quality factor	...	...	302.3.1 302.3.3 305.2.3 306.1.3 K302.3.3 K306.1.2	302.3.3C Table A-1A	...
E_j	Joint quality factor	...	...	302.3.1 302.3.4 305.2.3 306.1.3 321.1.3 341.4.1 341.5.1 K302.3.4 K305.1 K306.1.2 K328.5.4	302.3.4 Table A-1B	...
E_m	Modulus of elasticity at maximum or minimum temperature	MPa	ksi	319.3.2 319.5.1	...	(22) (23)
E_m	Modulus of elasticity at the temperature of the condition	MPa	ksi	P319.5	...	...
E_t	Modulus of elasticity at test temperature	MPa	ksi	X302.2.3	...	(X2)
F	Service (design) factor	...	...	A302.3.2 A304.1.1 A304.1.2	...	(26c)
F_a	Axial force	N	lb	P319.4.4	...	(P17a) (P17b)
f	Stress range reduction factor	...	...	302.3.5 P302.3.5	302.3.5	(1a) (1b) (1c) (P1a) (P1c)
f_m	Maximum value of stress range factor	...	...	302.3.5	302.3.5	(1c)
g	Root gap for welding	mm	in.	K328.4.3	328.4.4 K328.5.4	...
h	Flexibility characteristic	...	...	...	D300	...
h_x	Height of extruded outlet	mm	in.	304.3.4	304.3.4	...
i	Stress intensification factor	...	...	319.3.6	D300	...
i_a	Axial force stress intensification factor	...	...	P319.4.4	...	(P17a) (P17b)
i_i	In-plane stress intensification factor	...	...	319.4.4	D300	(18) (19) (20)
i_o	Out-plane stress intensification factor	...	...	319.4.4 P319.4.4	D300	(18) (19) (20)
K	Factor determined by ratio of branch diameter to run diameter	...	...	304.3.4	304.3.4	(9)
K_s	Factor for statistical variation in test results (see para. X3.1.3)	...	...	X302.1.3	...	(X2)
K_1	Constant in empirical flexibility equation	...	...	319.4.1	...	(16)

Copyright ASME International
Provided by IHS under license with ASME
No reproduction or networking permitted without license from IHS Not for Resale

Symbol	Definition	Units [Note (1)] SI	Units [Note (1)] U.S.	Reference Paragraph	Reference Table/Fig./App.	Reference Equation
k	Flexibility factor	. . .	. . .	319.3.6	D300	. . .
L	Developed length of piping between anchors	m	ft	304.2.4 319.4.1 K304.2.4	. . .	(16)
L_4	Height of reinforcement zone outside run pipe	mm	in.	304.3.3 H300	304.3.3 H301	(8)
L_5	Height of reinforcement zone for extruded outlet	mm	in.	304.3.4	304.3.4	(11)
LMP	Larson-Miller parameter, used to estimate design life	. . .	. . .	V303.1.3 V303.1.4	. . .	(V2) (V3)
M	Length of full thickness pipe adjacent to miter bend	mm	in.	304.2.3	304.2.3	. . .
M_i	In-plane bending moment	N-mm	in.-lbf	319.4.4	319.4.4A 319.4.4B	(18) (19) (20)
M_O	Out-plane bending moment	N-mm	in.-lbf	319.4.4	319.4.4A 319.4.4B	(18) (19) (20)
M_t	Torsional moment	N-mm	in.-lbf	319.4.4	319.4.4A 319.4.4B	. . .
m	Misfit of branch pipe	mm	in.	328.4.3 K328.4.3	328.4.4 K328.5.4	. . .
N	Equivalent number of full displacement cycles	. . .	. . .	300.2 302.3.5 319.4.5	302.3.5	(1c) (1d)
N	Equivalent number of full operating cycles	. .	. . .	P300.2 P302.3.5 P319.4.4	. . .	(P1c) (P1d)
N_E	Number of cycles of maximum computed displacement stress range	. . .	. . .	302.3.5	. . .	(1d)
N_E	Number of cycles of maximum computed operating stress range	. . .	. . .	. . .	P302.3.5	(P1d)
N_i	Number of cycles associated with displacement stress range S_i ($i = 1, 2, \ldots$)	. . .	. . .	302.3.5	. . .	(1d)
N_i	Number of cycles associated with operating stress range, S_i ($i = 1, 2, \ldots$)	. . .	. . .	. . .	P302.3.5	(P1d)
N_t	Number of fatigue tests performed to develop the material factor X_m	. . .	. . .	X302.1.3	. . .	(X2)
P	Design gage pressure	kPa	psi	304.1.1 304.1.2 304.4.1 304.5.1 304.5.2 304.5.3 345.4.2 A304.1.1	D300	(3a) (3b) (3c) (15) (24) (26) (34a) (34b) (35a) (35b) (37)

Copyright ASME International
Provided by IHS under license with ASME
No reproduction or networking permitted without license from IHS Not for Resale

Symbol	Definition	Units [Note (1)] SI	Units [Note (1)] U.S.	Reference Paragraph	Reference Table/Fig./App.	Reference Equation
				A304.1.2 A304.5.1 H300 K304.1.1 K304.1.2 K304.7.2 K304.8.4 K345.4.2		
P_{a2}	See BPV Code, Section VIII, Division 1, UG-28	. . .	. . .	304.1.3	. . .	. . .
P_i	Gage pressure during service condition i	kPa	psi	V303.1.1	. . .	(V1)
P_j	Piping internal pressure for load case $j=1$; multiple cases subscripted, 2, 3, . . .	kPa	psi	. . .	S301 S302	. . .
P_m	Maximum allowable internal pressure for miter bends	kPa	psi	304.2.3	. . .	(4a) (4b) (4c)
$P_{max.}$	Maximum allowable gage pressure for continuous operation of component at maximum design temperature	kPa	psi	V303.1.1	. . .	(V1)
P_S	Limiting design pressure based on column instability, for convoluted U-shaped bellows	kPa	psi	X302.2.3	. . .	(X3)
P_T	Minimum test gage pressure	kPa	psi	345.4.2 A382.2.5 X302.2.3	. . .	(24) (27) (X2)
R	Range of reaction forces or moments in flexibility analysis	N or N-mm	lbf or in.-lbf	319.5 319.5.1	. . .	(22)
R_a	Estimated instantaneous reaction force or moment at installation temperature	N or N-mm	lbf or in.-lbf	319.5.1	. . .	. . .
R_m	Estimated instantaneous maximum reaction force or moment at maximum or minimum metal temperature	N or N-mm	lbf or in.-lbf	319.5.1	. . .	(22)
$R_{min.}$	Minimum ratio of stress ranges (see para. X3.1.3 for further details)	. . .	. . .	X302.1.3	. . .	(X1) (X2)
R_T	Ratio of the average temperature dependent trend curve value of tensile strength to the room temperature tensile strength	. . .	. . .	302.3.2(d)(8)	. . .	. . .
R_Y	Ratio of the average temperature dependent trend curve value of yield strength to the room temperature yield strength	. . .	. . .	302.3.2(d)(8) K302.3.2	. . .	. . . (31)
R_1	Effective radius of miter bend	mm	in.	304.2.3	304.2.3	(4b) (5)
R_1	Bend radius of welding elbow or pipe bend	mm	in.	304.2.1	D300	(3f) (3g)
r_i	Ratio of a lesser computed displacement stress range S_i to maximum computed stress range S_{Ei} (i = 1, 2, . . .)	. . .	. . .	302.3.5	. . .	(1d)

Copyright ASME International
Provided by IHS under license with ASME
No reproduction or networking permitted without license from IHS
Not for Resale

Symbol	Definition	Units [Note (1)] SI	Units [Note (1)] U.S.	Reference Paragraph	Reference Table/Fig./App.	Reference Equation
r_i	Ratio of lesser computed operating stress range, S_i to the maximum computed stress range S_E ($i = 1, 2, \ldots$)	...	...	P302.3.5	...	(P1d)
r_x	External contour radius of extruded outlet	mm	in.	304.3.4	304.3.4 D300	(12)
r_2	Mean radius of pipe using nominal wall thickness $\overline{T}$	mm	in.	304.2.3 319.4.4	304.2.3 D300	(4a) (4b) (4c) (21)
S	Basic allowable stress for metals	MPa	ksi	300.2 302.3.1 304.1.1 304.1.2 304.1.3 304.2.3 304.3.3 304.4.1 304.5.1 304.5.2 304.5.3 319.3.4 345.4.2 H300	A-1	(3a) (3b) (3c) (4a) (4b) (4c) (15) (24)
S	Bolt design stress	MPa	ksi	300.2 302.3.1	A-2	...
S	Design stress for nonmetals	...	...	A304.1.1 A304.1.2 A304.5.1 A304.5.2	B-1	(26)
S	Allowable stress for metals	MPa	ksi	K304.1.1 K304.1.2 K345.4.2	K-1	(34a) (34b) (35a) (35b)
S	Stress intensity	MPa	ksi	K304.8.4	...	(37)
S_A	Allowable stress range for displacement stress	MPa	ksi	300.2 302.3.5 319.2.3 319.3.4 319.4.4 319.4.5 P319.4.5 K302.3.5	...	(1a) (1b) (32)
S_a	Bolt design stress at atmospheric temperature	MPa	ksi	304.5.1 A304.5.1	...	...
S_a	Stress due to axial force	MPa	ksi	P319.4.4	...	(P17a) (P17b)
S_b	Bolt design stress at design temperature	MPa	ksi	304.5.1 A304.5.1	...	...
S_b	Resultant bending stress	MPa	ksi	319.4.4 P319.4.4	...	(17) (18) (19) (20) (P17a) (P17b)

Copyright ASME International
Provided by IHS under license with ASME
No reproduction or networking permitted without license from IHS
Not for Resale

Symbol	Definition	Units [Note (1)] SI	Units [Note (1)] U.S.	Reference Paragraph	Reference Table/Fig./App.	Reference Equation
S_c	Basic allowable stress at minimum metal temperature expected during the displacement cycle under analysis	MPa	ksi	302.3.5 K302.3.5	...	(1a) (1b) (32)
S_d	Allowable stress from Table A-1 for the material at design temperature	MPa	ksi	V303.1.1	...	(V1)
S_E	Computed displacement stress range	MPa	ksi	300.2 302.3.5 319.2.3 319.4.4 319.4.5 319.5.1	...	(17) (23)
S_E	Maximum operating stress range	MPa	ksi	P300.2 P319.4.4	...	(P17b)
S_f	Allowable stress for flange material or pipe	MPa	ksi	304.5.1 304.5.2	...	...
S_H	Mean long term hydrostatic strength (LTHS)	kPa	psi	A328.2.5	...	(27)
S_h	Basic allowable stress at maximum metal temperature expected during the displacement cycle under analysis	MPa	ksi	302.3.5 319.5.1 K302.3.5 P302.3.5	...	(1a) (1b) (23) (32) (P1a)
S_i	A computed displacement stress range smaller than S_E ($i = 1, 2, \ldots$)	MPa	ksi	302.3.5	...	(1d)
S_i	A computed operating stress range smaller than S_E ($i = 1, 2, \ldots$)	MPa	ksi	P302.3.5	...	...
S_i	Equivalent stress during service condition i (the higher of S_{pi} and S_L)	MPa	ksi	V303.1.1 V303.1.2	...	...
S_L	Sum of longitudinal stresses	MPa	ksi	302.3.5 302.3.6 K302.3.5 K302.3.6	...	(1b)
S_o	Operating stress	MPa	ksi	P319.4.4	...	(P17a)
S_{oA}	Allowable operating stress limit	MPa	ksi	P302.3.5 P300.2 P319.4.4 P319.4.5	...	(P1a)
S_{om}	Greatest of maximum operating stress and operating stress range	MPa	ksi	P319.4.4 P302.3.5	...	...
S_{pi}	Equivalent stress for pressure during service condition i	MPa	ksi	V303.1.1	...	(V1)
S_S	Mean short term burst stress	kPa	psi	A328.2.5	...	(27)
S_T	Specified minimum tensile strength at room temperature	MPa	ksi	302.3.2	...	...

Copyright ASME International
Provided by IHS under license with ASME
No reproduction or networking permitted without license from IHS Not for Resale

Symbol	Definition	Units [Note (1)] SI	Units [Note (1)] U.S.	Reference Paragraph	Reference Table/Fig./App.	Reference Equation
S_T	Allowable stress at test temperature	MPa	ksi	345.4.2 K345.4.2	. . .	(24) (38)
S_t	Torsional stress	MPa	ksi	319.4.4 P319.4.4	. . .	(17) (P17a) (P17b)
S_t	Total stress range for design fatigue curves applying to austenitic stainless steel expansion joints	. . .	psi	X302.1.3	X302.1.3	. . .
S_Y	Specified minimum yield strength at room temperature	MPa	ksi	302.3.2 K302.3.2 K328.2.1	. . .	(31)
S_y	Yield stress (BPV Code)	MPa	ksi	302.2.4	. . .	. . .
S_{yt}	Yield strength at temperature	MPa	ksi	K302.3.2	. . .	(31)
s	Miter spacing at pipe centerline	mm	in.	. . .	D300	. . .
T	Pipe wall thickness (measured or minimum per purchase specification)	mm	in.	304.1.1 304.2.3 306.4.2 A304.1.1 A328.2.5 K304.1.1 K304.1.2	323.3.1 328.5.2B K323.3.1	(4a) (4b) (4c) (35a) (35b) (27)
T_b	Branch pipe wall thickness (measured or minimum per purchase specification)	mm	in.	304.3.3 304.3.4 H300	304.3.3 304.3.4	(8) (11) (12)
T_c	Crotch thickness of branch connections	mm	in.	. . .	D300	. . .
T_E	Design temperature during service condition i (temperature corresponding to S_i, Table A-1)	°C	°F	V303.1.2 V303.1.3	. . .	(V2)
T_h	Header pipe wall thickness (measured or minimum per purchase specification)	mm	in.	304.3.3 304.3.4 H300	304.3.3 304.3.4	(7) (10)
T_i	Actual temperature during service condition i	°C	°F	V303.1.4	. . .	(V3)
T_j	Pipe maximum or minimum metal temperature for load case $j = 1$; multiple cases subscripted, 2, 3, . . .	°C	°F	. . .	S301 S302	. . .
T_r	Minimum thickness of reinforcing ring or saddle made from pipe (nominal thickness if made from plate)	mm	in.	304.3.3 H300	304.3.3	. . .
T_s	Effective branch wall thickness	mm	in.	319.4.4	. . .	(21)
T_x	Corroded finished thickness of extruded outlet	mm	in.	304.3.4	304.3.4	(12)
T_2	Minimum thickness of fabricated lap	mm	in.	. . .	328.5.5	. . .

Copyright ASME International
Provided by IHS under license with ASME
No reproduction or networking permitted without license from IHS
Not for Resale

Symbol	Definition	Units [Note (1)] SI	Units [Note (1)] U.S.	Reference Paragraph	Reference Table/Fig./App.	Reference Equation
$\overline{T}$	Nominal wall thickness of pipe	mm	in.	302.3.5	328.5.2B 328.5.5 K302.3.3D D300	. . .
$\overline{T}_b$	Nominal branch pipe wall thickness	mm	in.	319.4.4 328.5.4 331.1.3	304.3.3 328.5.4D	. . .
$\overline{T}_h$	Nominal header pipe wall thickness	mm	in.	319.4.4 328.5.4 331.1.3	304.3.3 328.5.4D	. . .
$\overline{T}_r$	Nominal thickness of reinforcing ring or saddle	mm	in.	328.5.4 331.1.3	328.5.4D D300	. . .
$\overline{T}_w$	Nominal wall thickness, thinner of components joined by butt weld	mm	in.	344.6.2	341.3.2 K341.3.2	. . .
t	Pressure design thickness	mm	in.	304.1.1 304.1.2 304.1.3 304.3.3 304.4.1 304.5.2 A304.1.1 A304.1.2 A304.1.3 K304.1.1 K304.1.2 K304.1.3 K304.5.2	304.1.1 328.5.2C	(2) (3a) (3b) (3c) (3d) (13) (14) (25) (26) (33) (34a) (36)
t_b	Pressure design thickness of branch	mm	in.	304.3.3 304.3.4 H300	304.3.3 304.3.4	(8) (11)
t_c	Throat thickness of cover fillet weld	mm	in.	328.5.4 331.1.3 H300	328.5.4	. . .
t_h	Pressure design thickness of header	mm	in.	304.3.3 304.3.4 H300	304.3.3 304.3.4	(6) (7) (9) (10)
t_i	Total duration of service condition *i*, at pressure P_i and temperature T_i	h	hr	V303.2	. . .	(V4)
t_m	Minimum required thickness, including mechanical, corrosion, and erosion allowances	mm	in.	304.1.1 304.2.1 304.4.1 304.5.2 304.5.3 328.4.2 A304.1.1 A304.2.1 K304.1.1 K304.2.1 K304.5.2 K328.4.2	328.3.2 328.4.3 K328.4.2 K341.3.2	(2) (13) (14) (15) (25) (33) (36)

Copyright ASME International
Provided by IHS under license with ASME
No reproduction or networking permitted without license from IHS
Not for Resale

Symbol	Definition	Units [Note (1)] SI	Units [Note (1)] U.S.	Reference Paragraph	Reference Table/Fig./App.	Reference Equation
$t_{min.}$	For branch, the smaller of $\overline{T}_b$ or $\overline{T}_r$	mm	in.	328.5.4	328.5.4	. . .
t_{ri}	Rupture life of a component subjected to repeated service conditions i and stress S_i	h	hr	V303.1.4 V303.2	. . .	(V3) (V4)
U	Straight line distance between anchors	m	ft	319.4.1	. . .	(16)
u	Creep-rupture usage factor, summed up from individual usage factors, t_i/t_{ri}	. . .	. . .	V303.2 V303.3	. . .	(V4)
W	Weld joint strength reduction factor	. . .	. .	302.2.2 302.3.5 304.1.1 304.1.2 304.2.1 304.2.3 304.3.3 304.4.1 304.5.1 304.5.2 304.5.3	. . .	(3a) (3b) (3c) (4a) (4b) (4c) (15)
X	Factor for modifying the allowable stress range S_t for bellows expansion joint (see para. X302.1.3 for further details	. . .	. . .	X302.1.3	. . .	(X1) (X2)
X_1	Ring reinforcement area	mm^2	$in.^2$	H304	. . .	. . .
X_2	Fillet weld reinforcement area	mm^2	$in.^2$	H304	. . .	. . .
$x_{min.}$	Size of fillet weld to slip-on or socket welding flange	mm	in.	. . .	328.5.2B	. . .
Y	Coefficient for effective stressed diameter	. . .	. . .	304.1.1 304.1.2	304.1.1	(3a)
y	Resultant of total displacement	mm	in.	319.4.1	. . .	(16)
Z	Section modulus of pipe	mm^3	$in.^3$	319.4.4	. . .	(18) (19)
Z_e	Effective section modulus for branch	mm^3	$in.^3$	319.4.4	. . .	(20) (21)
α	Angle of change in direction at miter joint	deg	deg	304.2.3 306.3.2 306.3.3 M306.3	304.2.3	. . .
β	Smaller angle between axes of branch and run	deg	deg	304.3.3	304.3.3	(6) (8)
ΔT_e	Range of temperature change for full cycle	°C	°F	302.3.5	. . .	. . .
ΔT_n	Range of temperature change for lesser cycle ($n = 1, 2, . . .$)	°C	°F	302.3.5	. . .	. . .
θ	Angle of miter cut	deg	deg	304.2.3	304.2.3 D300	(4a) (4c) (5)

GENERAL NOTE: For Code reference to this Appendix, see para. 300.3.

NOTE:

(1) Note that the use of these units is not required by the Code. They represent sets of consistent units (except where otherwise stated) which may be used in computations, if stress values in ksi and MPa are multiplied by 1000 for use in equations that also involve pressure in psi and kPa values.

Copyright ASME International
Provided by IHS under license with ASME
No reproduction or networking permitted without license from IHS Not for Resale

APPENDIX K
ALLOWABLE STRESSES FOR HIGH PRESSURE PIPING

Specification Index for Appendix K (04)

Spec. No.	Title	Page
ASTM		
A 53	Pipe, Steel, Black and Hot-Dipped, Zinc Coated, Welded and Seamless	260
A 105	Forgings, Carbon Steel, for Piping Components	260
A 106	Seamless Carbon Steel Pipe for High-Temperature Service	260
A 182	Forged or Rolled Alloy-Steel Pipe Flanges, Forged Fittings, and Valves and Parts for High-Temperature Service	262, 264, 266
A 210	Seamless Medium-Carbon Steel Boiler and Superheater Tubes	260
A 234	Piping Fittings of Wrought Carbon Steel and Alloy Steel for Moderate and Elevated Temperatures	260
A 312	Seamless and Welded Austenitic Stainless Steel Pipe	262, 264
A 333	Seamless and Welded Steel Pipe for Low-Temperature Service	260, 262
A 334	Seamless and Welded Carbon and Alloy-Steel Tubes for Low-Temperature Service	260, 262
A 335	Seamless Ferritic Alloy Steel Pipe for High-Temperature Service	260
A 350	Forgings, Carbon and Low-Alloy Steel Requiring Notch Toughness Testing for Piping Components	260, 262
A 358	Electric-Fusion-Welded Austenitic Chromium-Nickel Alloy Steel Pipe for High-Temperature Service	262, 264
A 403	Wrought Austenitic Stainless Steel Piping Fittings	264, 266
A 420	Piping Fittings of Wrought Carbon Steel and Alloy Steel for Low-Temperature Service	260, 262
A 508	Quenched and Tempered Vacuum-Treated Carbon and Alloy Steel Forgings for Pressure Vessels	262
A 723	Alloy Steel Forgings for High-Strength Pressure Component Application	262
B 164	Nickel-Copper Alloy Rod, Bar and Wire	268
B 165	Nickel-Copper Alloy (UNS N04400) Seamless Pipe and Tube	268
B 166	Nickel-Chromium-Iron Alloy (UNS N06600) Rod, Bar and Wire	268
B 167	Nickel-Chromium-Iron Alloy (UNS N06600-N06690) Seamless Pipe and Tube	268
B 337	Seamless and Welded Titanium and Titanium Alloy Pipe	270
B 338	Seamless and Welded Titanium and Titanium Alloy Tubes for Condensers and Heat Exchangers	270
B 363	Seamless and Welded Unalloyed Titanium and Titanium Alloy Welding Fittings	270
B 366	Factory-Made Wrought Nickel and Nickel-Alloy Welding Fittings	268
B 381	Titanium and Titanium Alloy Forgings	270
B 568	Nickel Alloy Forgings	268
B 574	Low-Carbon Nickel-Molybdenum-Chrome Alloy Rod	268
B 622	Seamless Nickel and Nickel-Cobalt Alloy Pipe and Tube	268
API		
5L	Line Pipe	260

GENERAL NOTE: It is not practical to refer to a specific edition of each standard throughout the Code text. Instead, the approved edition references, along with the names and addresses of the sponsoring organizations, are shown in Appendix E.

Copyright ASME International
Provided by IHS under license with ASME
No reproduction or networking permitted without license from IHS
Not for Resale

(04)

NOTES FOR APPENDIX K TABLES

GENERAL NOTES:

(a) The allowable stress values and P-Number or S-Number assignments in Table K-1, together with the referenced Notes and double bars [see Note (7) of Notes for Appendix A Tables], are requirements of Chapter IX.

(b) Notes (1) through (7) and Notes (17) and (18) are referenced in Table headings and in headings for material type and product form; Notes (8) through (16) and (19) through (21) are referenced in the Notes column for specific materials.

(c) At this time, metric equivalents have not been provided in Table K-1. To convert stress values in Table K-1 to MPa at a given temperature in °C, determine the equivalent temperature in °F and interpolate to calculate the stress value in ksi at the given temperature. Multiply by 6.895 to determine allowable stress in MPa at the given temperature.

NOTES:

(1) The stress values in Table K-1 are allowable stresses in tension in accordance with para. K302.3.1(a). Stress values in shear and bearing are stated in para. K302.3.1(b), those in compression in para. K302.3.1(c).

(2) Samples representative of all piping components, as well as their fabrication welds, shall be impact tested in accordance with para. K323.3.

(3) Material minimum service temperature shall be in accordance with para. K323.2.2.

(4) The temperature limit for materials shall be in accordance with para. K323.2.1. A double bar (‖) after a tabled stress indicates that use of the material is prohibited above that temperature.

(5) Stress values printed in *italics* exceed two-thirds of the expected yield strength at temperature. Stress values in **boldface** are equal to 90% of yield strength at temperature. See para. K302.3.2.

(6) A product analysis of the material shall be performed. See para. K323.1.5.

(7) See para. 328.2.1(f) for a description of P-Number and S-Number groupings. P-Numbers are indicated by number or by a number followed by a letter (e.g., 8, or 5B, or 11A). S-Numbers are preceded by an S (e.g., S-1).

(8) This type or grade is permitted only in the seamless condition.

(9) If this grade is cold expanded, the most severely deformed portion of a representative sample shall be impact tested in accordance with para. K323.3.

(10) This material may require special consideration for welding qualification. See the BPV Code, Section IX, QW/QB-422. For use in this Code, a qualified WPS is required for each strength level of material.

(11) No welding is permitted on this material.

(12) Welds in components shall be of a design that permits fully interpretable radiographic examination; joint quality factor E_j shall be 1.00 per para. K302.3.4.

(13) Pipe furnished to this specification shall be supplied in the solution heat treated condition.

(14) This unstabilized grade of stainless steel increasingly tends to precipitate intergranular carbides as the carbon content increases above 0.03%. See also para. F323.4(c)(2).

(15) Stress values shown are for the lowest strength base material permitted by the specification to be used in the manufacture of this grade of fitting. If a higher strength base material is used, the higher stress values for that material may be used in design.

(16) Galvanized pipe furnished to this specification is not permitted for pressure containing service. See para. K323.4.2(b).

(17) Pipe and tubing shall be examined for longitudinal defects in accordance with Table K305.1.2.

(18) Material defects may be repaired by welding only in accordance with para. K323.1.6.

(19) For material thickness > 127 mm (5 in.), the specified minimum tensile strength is 448 MPa (65 ksi).

(20) For material thickness > 127 mm (5 in.), the specified minimum tensile strength is 483 MPa (70 ksi).

(21) At temperatures above 100°F, the allowable stresses listed in Table A-1 for this material may be used for Chapter IX applications. Alternatively, allowable stresses may be derived in accordance with the requirements of para. K323.2.1.

Copyright ASME International
Provided by IHS under license with ASME
No reproduction or networking permitted without license from IHS
Not for Resale

Copyright ASME International
Provided by IHS under license with ASME
No reproduction or networking permitted without license from IHS
Not for Resale

(04)

Table K-1 Allowable Stresses in Tension for Metals for Chapter IX[1–6, 18]

Numbers in Parentheses Refer to Notes for Appendix K Tables; Specifications Are ASTM Unless Otherwise Indicated

Material	Spec. No.	P-No. or S-No. (7)	Type or Grade	Notes	Specified Min. Strength, ksi	
					Tensile	Yield
Carbon Steel Pipes and Tubes (17)						
...	A 53	1	B	(8)(16)		
...	A 106	1	B	...		
...	A 333	1	6	(8)	60	35
...	A 334	1	6	(8)		
...	API 5L	S-1	B	(8)(9)		
...	A 210	1	A-1	...	60	37
...	A 106	1	C	...	70	40
...	A 210	1	C	...	70	40
...	API 5L	S-1	X42	(8)(9)(21)	60	42
...	API 5L	S-1	X46	(8)(9)(21)	63	46
...	API 5L	S-1	X52	(8)(9)(21)	66	52
...	API 5L	S-1	X56	(8)(9)(10)(21)	71	56
...	API 5L	S-1	X60	(8)(9)(10)(21)	75	60
...	API 5L	S-1	X65	(8)(9)(10)(21)	77	65
...	API 5L	S-1	X70	(8)(9)(10)(21)	82	70
...	API 5L	S-1	X80	(8)(9)(10)(21)	90	80
Forgings and Fittings						
...	A 234	1	WPB			
...	A 420	1	WPL6	(8)	60	35
...	A 350	1	LF2			
...	A 105	1	...	...	70	36
...	A 234	1	WPC	(8)	70	40
Low and Intermediate Alloy Steel Pipes and Tubes (17)						
C–$\frac{1}{2}$Mo	A 335	3	P1	...	55	30
1Cr–$\frac{1}{2}$Mo	A 335	4	P12	...	60	32
1$\frac{1}{4}$Cr–$\frac{1}{2}$Mo	A 335	4	P11	...	60	30
5Cr–$\frac{1}{2}$Mo	A 335	5A	P5	...	60	30
2$\frac{1}{4}$Cr–1Mo	A 335	5A	P22	...	60	30

Copyright ASME International
Provided by IHS under license with ASME
No reproduction or networking permitted without license from IHS
Not for Resale

Table K-1 Allowable Stresses in Tension for Metals for Chapter IX[1–6, 18] (04)

Numbers in Parentheses Refer to Notes for Appendix K Tables; Specifications Are ASTM Unless Otherwise Indicated

Allowable Stress, ksi (Multiply by 1000 to Obtain psi), for Metal Temperature, °F, Not Exceeding										
100	200	250	300	400	500	600	650	700	Type or Grade	Spec. No.
										Carbon Steel Pipes and Tubes (17)
									B	A 53
									B	A 106
23.3	21.3	...	20.7	20.0	18.9	17.3	16.9	16.8	6	A 333
									6	A 334
									B	API 5L
24.7	22.5	...	21.9	21.1	20.0	18.3	17.9	17.8	A-1	A 210
										A 106
26.7	24.3	...	22.9	23.7	21.6	19.7	19.4	19.2	C	A 210
28.0	...	...	...	...	...	...	...	...	X42	API 5L
30.7	...	...	...	...	...	...	...	...	X46	API 5L
34.7	...	...	...	...	...	...	...	...	X52	API 5L
37.3	...	...	...	...	...	...	...	...	X56	API 5L
40.0	...	...	...	...	...	...	...	...	X60	API 5L
43.3	...	...	...	...	...	...	...	...	X65	API 5L
46.7	...	...	...	...	...	...	...	...	X70	API 5L
53.3	...	...	...	...	...	...	...	...	X80	API 5L
										Forgings and Fittings
									WPB	A 234
23.3	21.3	...	20.7	20.0	18.9	17.3	16.9	16.8	WPL6	A 420
									LF2	A 350
24.0	21.9	...	21.3	20.6	19.5	17.7	17.5	17.3	...	A 105
26.7	24.3	...	23.7	22.9	21.6	19.7	19.4	19.2	WPC	A 234
										Low and Intermediate Alloy Steel Pipes and Tubes (17)
20.0	18.5	...	17.5	16.9	16.3	15.7	15.4	15.1	P1	A 335
21.3	19.3	...	18.1	17.3	16.7	16.3	16.1	15.8	P12	A 335
20.0	18.7	...	17.9	17.5	17.2	16.7	16.2	15.7	P11	A 335
20.0	18.1	...	17.4	17.2	17.1	16.8	16.6	16.3	P5	A 335
20.0	18.5	...	18.1	17.9	17.9	17.9	17.9	17.9	P22	A 335

Copyright ASME International
Provided by IHS under license with ASME
No reproduction or networking permitted without license from IHS
Not for Resale

(04)

Table K-1 Allowable Stresses in Tension for Metals for Chapter IX[1–6, 18] (Cont'd)

Numbers in Parentheses Refer to Notes for Appendix K Tables; Specifications Are ASTM Unless Otherwise Indicated

Material	Spec. No.	P-No. or S-No. (7)	Type or Grade	Notes	Specified Min. Strength, ksi	
					Tensile	Yield
Low and Intermediate Alloy Steel (Cont'd)						
Pipes and Tubes (17) (Cont'd)						
3½Ni	A 333	9B	3	(8)	65	35
3½Ni	A 334	9B	3			
9Ni	A 333	11A	8	(8)	100	75
9Ni	A 334					
Forgings and Fittings						
3½Ni	A 420	9B	WPL3	(8)	65	35
3½Ni	A 350	9B	LF3	...	70	37.5
1Cr–½Mo	A 182	4	F12, Cl. 2	...	70	40
1¼Cr–½Mo	A 182	4	F11, Cl. 2	...	70	40
C–½Mo	A 182	3	F1	...	70	40
5Cr–½Mo	A 182	5B	F5	...	70	40
2¼Cr–1Mo	A 182	5A	F22, Cl. 3	...	75	45
9Ni	A 420	11A	WPL8	(8)	100	75
3½Ni–1¾Cr–½Mo	A 508	11A	4N, Cl. 2	...	115	100
Ni–Cr–Mo	A 723	...	1, 2, 3 Cl. 1	(11)	115	100
Ni–Cr–Mo	A 723	...	1, 2, 3 Cl. 2	(11)	135	120
Ni–Cr–Mo	A 723	...	1, 2, 3 Cl. 3	(11)	155	140
Stainless Steel (5)						
Pipes and Tubes (17)						
16Cr–12Ni–2Mo	A 312	8	TP316L	(12)		
316L, A 240	A 358	8	316L, Cl. 1 & 3	(12)(13)	70	25
16Cr–12Ni–2Mo–N	A 312	8	TP316LN	(12)		
316LN, A 240	A 358	8	316LN, Cl. 1 & 3	(12)(13)	75	30
18Cr–8Ni	A 312	8	TP304L	(12)		
304L, A 240	A 358	8	304L, Cl. 1 & 3	(12)(13)	70	25
18Cr–8Ni–N	A 312	8	TP304LN	(12)		
304LN, A 240	A 358	8	304LN, Cl. 1 & 3	(12)(13)	75	30

Copyright ASME International
Provided by IHS under license with ASME
No reproduction or networking permitted without license from IHS
Not for Resale

Table K-1 Allowable Stresses in Tension for Metals for Chapter IX[1–6, 18] (Cont'd) (04)

Numbers in Parentheses Refer to Notes for Appendix K Tables; Specifications Are ASTM Unless Otherwise Indicated

Allowable Stress, ksi (Multiply by 1000 to Obtain psi), for Metal Temperature, °F, Not Exceeding										
100	200	250	300	400	500	600	650	700	Type or Grade	Spec. No.
									Low and Intermediate Alloy Steel (Cont'd)	
									Pipes and Tubes (17) (Cont'd)	
23.3	21.3	. . .	20.7	20.0	18.9	17.3	17.0	15.7	3	A 333 A 334
50.0	48.0	47.0	. . .	. . .	. . .	. . .	. . .	. . .	8	A 333 A 334
									Forgings and Fittings	
23.3	21.3	. . .	19.6	. . .	. . .	. . .	. . .	. . .	WPL3	A 420
25.0	22.8	. . .	22.1	. . .	. . .	. . .	. . .	. . .	LF3	A 350
26.7	24.1	. . .	22.7	21.7	20.9	20.3	20.1	19.7	F12, Cl. 2	A 182
26.7	24.6	. . .	23.4	22.5	21.7	20.9	20.5	20.1	F11, Cl. 2	A 182
26.7	24.6	. . .	23.4	22.5	21.7	20.9	20.5	20.1	F1	A 182
26.7	24.1	. . .	23.2	22.9	22.7	22.4	22.1	21.7	F5	A 182
30.0	27.5	. . .	26.1	25.5	24.8	24.3	24.0	23.7	F22, Cl. 3	A 182
50.0	48.0	47.0	. . .	. . .	. . .	. . .	. . .	. . .	WPL8	A 420
66.7	62.8	. . .	60.8	59.5	58.5	57.4	56.7	. . .	4N, Cl. 2	A 508
66.7	64.0	. . .	62.3	61.3	60.3	59.3	58.5	57.3	1, 2, 3 Cl. 1	A 723
80.0	76.8	. . .	74.8	73.6	72.4	71.2	70.1	68.8	1, 2, 3 Cl. 2	A 723
93.3	89.6	. . .	87.3	85.9	84.5	83.1	81.9	80.3	1, 2, 3 Cl. 3	A 723
									Stainless Steel (5)	
									Pipes and Tubes (17)	
16.7	*16.7*	. . .	*16.7*	**15.8**	**14.8**	**14.0**	**13.8**	**13.5**	TP316L 316L, Cl. 1 & 3	A 312 A 358
20.0	*20.0*	. . .	*20.0*	**18.9**	**17.5**	**16.5**	**16.0**	**15.6**	TP316LN 316LN, Cl. 1 & 3	A 312 A 358
16.7	*16.7*	. . .	*16.7*	**15.8**	**14.7**	**14.0**	**13.7**	**13.4**	TP304L 304L, Cl. 1 & 3	A 312 A 358
20.0	*20.0*	. . .	*20.0*	**18.6**	**17.5**	**16.4**	**16.1**	**15.9**	TP304LN 304LN, Cl. 1 & 3	A 312 A 358

Copyright ASME International
Provided by IHS under license with ASME
No reproduction or networking permitted without license from IHS
Not for Resale

Table K-1 Allowable Stresses in Tension for Metals for Chapter IX[1–6, 18] (Cont'd)

Numbers in Parentheses Refer to Notes for Appendix K Tables; Specifications Are ASTM Unless Otherwise Indicated

Material	Spec. No.	P-No. or S-No. (7)	Type or Grade	Notes	Specified Min. Strength, ksi	
					Tensile	Yield
Stainless Steel (5) (Cont'd)						
Pipes and Tubes (17) (Cont'd)						
18Cr–10Ni–Ti smls. > 3/8 in. thick	A 312	8	TP321	. . .	70	25
18Cr–10Ni–Ti smls. ≤ 3/8 in. thick or wld.	A 312	8	TP321	(12)	75	30
321, A 240	A 358	8	321, Cl. 1 & 3	(12)(13)		
18Cr–8Ni	A 312	8	TP304	(12)(14)	75	30
304, A 240	A 358	8	304, Cl. 1 & 3	(12)(13)(14)		
16Cr–12Ni–2Mo	A 312	8	TP316	(12)(14)	75	30
316, A 240	A 358	8	316, Cl. 1 & 3	(12)(13)(14)		
18Cr–13Ni–3Mo	A 312	8	TP317	(12)(14)		
18Cr–10Ni–Cb	A 312	8	TP347	(12)	75	30
347, A 240	A 358	8	347, Cl. 1 & 3	(12)(13)		
18Cr–8Ni–N	A 312	8	TP304N	(12)(14)	80	35
304N, A 240	A 358	8	304N, Cl. 1 & 3	(12)(13)(14)		
16Cr–12Ni–2Mo–N	A 312	8	TP316N	(12)(14)	80	35
316N, A 240	A 358	8	316N, Cl. 1 & 3	(12)(13)(14)		
Forgings and Fittings						
16Cr–12Ni–2Mo	A 182	8	F316L	(19)	70	25
16Cr–12Ni–2Mo	A 403	8	WP316L, Cl. S & WX	(12)		
16Cr–12Ni–2Mo–N	A 182	8	F316LN	(20)	75	30
16Cr–12Ni–2Mo–N	A 403	8	WP316LN, Cl. S & WX	(12)		
18Cr–8Ni	A 182	8	F304L	(19)	70	25
18Cr–8Ni	A 403	8	WP304L, Cl. S & WX	(12)		
18Cr–8Ni–N	A 182	8	F304LN	(20)	75	30
18Cr–8Ni–N	A 403	8	WP304LN, Cl. S & WX	(12)		

Copyright ASME International
Provided by IHS under license with ASME
No reproduction or networking permitted without license from IHS
Not for Resale

Table K-1 Allowable Stresses in Tension for Metals for Chapter IX[1–6, 18] (Cont'd)

Numbers in Parentheses Refer to Notes for Appendix K Tables; Specifications Are ASTM Unless Otherwise Indicated

Allowable Stress, ksi (Multiply by 1000 to Obtain psi), for Metal Temperature, °F, Not Exceeding									Type or Grade	Spec. No.
100	200	250	300	400	500	600	650	700		
									Stainless Steel (5) (Cont'd)	
									Pipes and Tubes (17) (Cont'd)	
16.7	*16.7*	. . .	*16.7*	*16.7*	**16.1**	**15.2**	**14.9**	**14.6**	TP321 smls. > $^3/_8$ in. thick	A 312
20.0	*20.0*	. . .	*20.0*	*20.0*	**19.4**	**18.3**	**17.9**	**17.5**	TP321 smls. ≤ $^3/_8$ in. thick & wld. 321, Cl. 1 & 3	A 312 A 358
20.0	*20.0*	. . .	*20.0*	**18.6**	**17.5**	**16.4**	**16.1**	**15.9**	TP304 304, Cl. 1 & 3	A 312 A 358
20.0	*20.0*	. . .	*20.0*	**19.3**	**18.0**	**17.0**	**16.7**	**16.3**	TP316 316, Cl. 1 & 3 TP317	A 312 A 358 A 312
20.0	*20.0*	. . .	*20.0*	*20.0*	*20.0*	**19.4**	**19.0**	**18.6**	TP347 347, Cl. 1 & 3	A 312 A 358
23.3	*23.3*	. . .	**22.5**	**20.3**	**18.8**	**17.8**	**17.6**	**17.2**	TP304N 304N, Cl. 1 & 3	A 312 A 358
23.3	*23.3*	. . .	*23.3*	*23.3*	**22.2**	**21.1**	**20.5**	**20.1**	TP316N 316N, Cl. 1 & 3	A 312 A 358
									Forgings and Fittings	
16.7	*16.7*	. . .	*16.7*	**15.8**	**14.8**	**14.0**	**13.8**	**13.5**	F316L WP316L, Cl. S & WX	A 182 A 403
20.0	*20.0*	. . .	*20.0*	**18.9**	**17.5**	**16.5**	**16.0**	**15.6**	F316LN WP316LN, Cl. S & WX	A 182 A 403
16.7	*16.7*	. . .	*16.7*	**15.8**	**14.7**	**14.0**	**13.7**	**13.4**	F304L WP304L, Cl. S & WX	A 182 A 403
20.0	*20.0*	. . .	*20.0*	**18.6**	**17.5**	**16.4**	**16.1**	**15.9**	F304LN WP304LN, Cl. S & WX	A 182 A 403

Copyright ASME International
Provided by IHS under license with ASME
No reproduction or networking permitted without license from IHS
Not for Resale

Table K-1 Allowable Stresses in Tension for Metals for Chapter IX[1–6, 18] (Cont'd)

Numbers in Parentheses Refer to Notes for Appendix K Tables; Specifications Are ASTM Unless Otherwise Indicated

Material	Spec. No.	P-No. or S-No. (7)	Type or Grade	Notes	Specified Min. Strength, ksi	
					Tensile	Yield
Stainless Steel (5) (Cont'd)						
Forgings and Fittings (Cont'd)						
18Cr–10Ni–Ti	A 182	8	F321	(20)		
18Cr–10Ni–Ti	A 403	8	WP321, Cl. S & WX	(12)	75	30
18Cr–8Ni	A 182	8	F304	(14)(20)		
18Cr–8Ni	A 403	8	WP304, Cl. S & WX	(12)(14)	75	30
16Cr–12Ni–2Mo	A 182	8	F316	(14)(20)		
16Cr–12Ni–2Mo	A 403	8	WP316, Cl. S & WX	(12)(14)	75	30
18Cr–13Ni–3Mo	A 403	8	WP317, Cl. S & WX	(12)(14)		
18Cr–10Ni–Cb	A 182	8	F347	(20)		
18Cr–10Ni–Cb	A 403	8	WP347, Cl. S & WX	(12)	75	30
18Cr–8Ni–N	A 182	8	F304N	(14)		
18Cr–8Ni–N	A 403	8	WP304N, Cl. S & WX	(12)(14)	80	35
16Cr–12Ni–2Mo–N	A 182	8	F316N	(14)		
16Cr–12Ni–2Mo–N	A 403	8	WP316N, Cl. S & WX	(12)(14)	80	35

Copyright ASME International
Provided by IHS under license with ASME
No reproduction or networking permitted without license from IHS
Not for Resale

Table K-1 Allowable Stresses in Tension for Metals for Chapter IX[1–6, 18] (Cont'd)

Numbers in Parentheses Refer to Notes for Appendix K Tables; Specifications Are ASTM Unless Otherwise Indicated

Allowable Stress, ksi (Multiply by 1000 to Obtain psi), for Metal Temperature, °F, Not Exceeding										
100	200	250	300	400	500	600	650	700	Type or Grade	Spec. No.
									Stainless Steel (5) (Cont'd)	
									Forgings and Fittings (Cont'd)	
20.0	*20.0*	. . .	*20.0*	*20.0*	**19.4**	**18.3**	**17.9**	**17.5**	F321	A 182
									WP321, Cl. S & WX	A 403
20.0	*20.0*	. . .	*20.0*	**18.6**	**17.5**	**16.4**	**16.1**	**15.9**	F304	A 182
									WP304, Cl. S & WX	A 403
20.0	*20.0*	. . .	*20.0*	**19.3**	**18.0**	**17.0**	**16.7**	**16.3**	F316	A 182
									WP316, Cl. S & WX	A 403
									WP317, Cl. S & WX	A 403
20.0	*20.0*	. . .	*20.0*	*20.0*	*20.0*	**19.4**	**19.0**	**18.6**	F347	A 182
									WP347, Cl. S & WX	A 403
23.3	*23.3*	. . .	**22.5**	**20.3**	**18.8**	**17.8**	**17.6**	**17.2**	F304N	A 182
									WP304N, Cl. S & WX	A 403
23.3	*23.3*	. . .	*23.3*	*23.3*	**22.2**	**21.0**	**20.5**	**20.1**	F316N	A 182
									WP316N, Cl. S & WX	A 403

Copyright ASME International
Provided by IHS under license with ASME
No reproduction or networking permitted without license from IHS
Not for Resale

Table K-1 Allowable Stresses in Tension for Metals for Chapter IX[1–6, 18] (Cont'd)

Numbers in Parentheses Refer to Notes for Appendix K Tables; Specifications Are ASTM Unless Otherwise Indicated

Material	Spec. No.	P-No. or S-No. (7)	UNS Number	Condition	Size Range, in.	Notes	Specified Min. Strength, ksi	
							Tensile	Yield
Nickel and Nickel Alloy (5) Pipes and Tubes (17)								
Ni–Cu	B 165	42	N04400	Annealed	> 5 O.D.	. . .	70	25
Ni–Cr–Fe	B 167	43	N06600	H.W.	> 5 O.D.	. . .	75	25
Ni–Cr–Fe	B 167	43	N06600	H.W. ann.				
Ni–Cu	B 165	42	N04400	Annealed	≤ 5 O.D.	. . .	70	28
Ni–Cr–Fe	B 167	43	N06600	H.W.	≤ 5 O.D.	. . .	80	30
Ni–Cr–Fe	B 167	43	N06600	H.W. ann.	≤ 5 O.D.	. . .		
Ni–Cr–Fe	B 167	43	N06600	C.W. ann.	> 5 O.D.	. . .		
Ni–Cr–Fe	B 167	43	N06600	C.W. ann.	≤ 5 O.D.	. . .	80	35
Ni–Mo–Cr	B 622	44	N10276	. . .	All	. . .	100	41
Ni–Cu	B 165	42	N04400	Str. rel.	All	. . .	85	55
Forgings and Fittings								
Ni–Cu	B 366	S-42	N04400	. . .	All	(12)(15)	70	25
Ni–Cu	B 564	42	N04400	Annealed	All	. . .		
Ni–Cr–Fe	B 366	S-43	N06600	. . .	All	(12)(15)	75	25
Ni–Cr–Fe	B 564	43	N06600	Annealed	All	. . .	80	35
Ni–Mo–Cr	B 366	44	N10276	. . .	All	(12)	100	41
Ni–Mo–Cr	B 564	44	N10276	Annealed	All	. . .		
Rod and Bar								
Ni–Cu	B 164	42	N04400	Annealed	All	. . .	70	25
Ni–Cr–Fe	B 166	43	N06600	C.W. ann. & H.W. ann.	All	. . .	80	35
Ni–Cr–Fe	B 166	43	N06600	H.W., A.W.	Sq., rec. & hex.	. . .	85	35
Ni–Cr–Fe	B 166	43	N06600	H.W., A.W.	> 3 rd.			
Ni–Cu	B 164	42	N04400	H.W.	Rod, sq. & rec. ≤ 12, hex. ≤ $2\frac{1}{8}$	. . .	80	40
Ni–Cr–Fe	B 166	43	N06600	H.W., A.W.	$\frac{1}{2}$ to 3 rd.	. . .	90	40
Ni–Mo–Cr	B 574	44	N10276	. . .	All	. . .	100	41
Ni–Cr–Fe	B 166	S-43	N06600	H.W., A.W.	$\frac{1}{4}$ to $\frac{1}{2}$ rd.	. . .	95	45

Abbreviations in Condition and Size Range Columns:

ann.	annealed	rd.	rounds
A.W.	as worked	rec.	rectangle
C.W.	cold worked	rel.	relieved
H.W.	hot worked	sq.	squares
hex.	hexagons	str.	stress
O.D.	outside diameter		

Copyright ASME International
Provided by IHS under license with ASME
No reproduction or networking permitted without license from IHS
Not for Resale

Table K-1 Allowable Stresses in Tension for Metals for Chapter IX[1–6, 18] (Cont'd) (04)

Numbers in Parentheses Refer to Notes for Appendix K Tables; Specifications Are ASTM Unless Otherwise Indicated

Allowable Stress, ksi (Multiply by 1000 to Obtain psi), for Metal Temperature, °F, Not Exceeding									UNS	
100	200	250	300	400	500	600	650	700	Number	Spec. No.
										Nickel and Nickel Alloy (5) Pipes and Tubes (17)
16.7	14.7	. . .	13.7	13.2	13.2	13.2	13.2	13.2	N04400	B 165
									N06600	B 167
16.7	*16.7*	. . .	*16.7*	*16.7*	*16.7*	*16.7*	*16.7*	*16.7*	N06600	B 167
18.7	16.5	. . .	15.4	14.8	14.8	14.8	14.8	14.8	N04400	B 165
									N06600	B 167
20.0	*20.0*		*20.0*	*20.0*	*20.0*	*20.0*	*20.0*	*20.0*	N06600	B 167
		. . .							N06600	B 167
23.3	*23.3*	. . .	*23.3*	*23.3*	*23.3*	*23.3*	*23.3*	*23.3*	N06600	B 167
27.3	*27.3*	. . .	*27.3*	*27.3*	**26.9**	**25.2**	**24.6**	**24.0**	N10276	B 622
36.7	32.3	. . .	30.2	29.1	29.1	. . .	. . .	. . .	N04400	B 165
										Forgings and Fittings
									N04400	B 366
16.7	14.7	. . .	13.7	13.2	13.2	13.2	13.2	13.2	N04400	B 564
16.7	*16.7*	. . .	*16.7*	*16.7*	*16.7*	*16.7*	*16.7*	*16.7*	N06600	B 366
23.3	*23.3*	. . .	*23.3*	*23.3*	*23.3*	*23.3*	*23.3*	*23.3*	N06600	B 564
27.3	*27.3*	. . .	*27.3*	*27.3*	**26.9**	**25.2**	**24.6**	**24.0**	N10276	B 366
									N10276	B 564
										Rod and Bar
16.7	14.7	. . .	13.7	13.2	13.2	13.2	13.2	13.2	N04400	B 164
									N06600	B 166
23.3	*23.3*	. . .	*23.3*	*23.3*	*23.3*	*23.3*	*23.3*	*23.3*	N06600	B 166
									N06600	B 166
26.7	23.5	. . .	21.9	21.2	21.2	21.2	21.2	21.2	N04400	B 164
26.7	24.5	. . .	23.1	22.0	21.2	20.7	20.6	20.4	N06600	B 166
27.3	*27.3*	. . .	*27.3*	*27.3*	**26.9**	**25.2**	**24.6**	**24.0**	N10276	B 574
30.0	21.2	. . .	21.2	21.2	21.2	21.2	21.2	21.1	N06600	B 166

Copyright ASME International
Provided by IHS under license with ASME
No reproduction or networking permitted without license from IHS
Not for Resale

Table K-1 Allowable Stresses in Tension for Metals for Chapter IX[1–6, 18] (Cont'd)

Numbers in Parentheses Refer to Notes for Appendix K Tables; Specifications Are ASTM Unless Otherwise Indicated

Material	Spec. No.	P-No. or S-No. (7)	Grade	Notes	Specified Min. Strength, ksi	
					Tensile	Yield
Titanium and Titanium Alloy Pipes and Tubes (17))						
Ti	B 337	51	2	...	50	40
Ti	B 338					
Ti–0.2 Pd	B 337	51	7	...	50	40
Ti–0.2 Pd	B 338					
Ti	B 337	52	3	(8)	65	55
Ti	B 338					
Forgings and Fittings						
Ti	B 363	51	WPT2	(12)	50	40
Ti	B 381	51	F2	...		
Ti–0.2 Pd	B 381	51	F7	...		
Ti	B 363	52	WPT3	(8)	65	55
Ti	B 381	52	F3	...		

Copyright ASME International
Provided by IHS under license with ASME
No reproduction or networking permitted without license from IHS
Not for Resale

Table K-1 Allowable Stresses in Tension for Metals for Chapter IX[1–6, 18] (Cont'd)

Numbers in Parentheses Refer to Notes for Appendix K Tables; Specifications Are ASTM Unless Otherwise Indicated

Allowable Stress, ksi (Multiply by 1000 to Obtain psi), for Metal Temperature, °F, Not Exceeding										
100	200	250	300	400	500	600	650	700	Grade	Spec. No.
									Titanium and Titanium Alloy Pipes and Tubes (17)	
26.7	21.5	. . .	16.8	12.4	9.4	7.6	. . .	. . .	2	B 337
									2	B 338
									7	B 337
									7	B 338
36.7	29.8	. . .	23.6	17.7	12.4	8.4	. . .	. . .	3	B 337
									3	B 338
									Forgings and Fittings	
26.7	21.5	. . .	16.8	12.4	9.4	7.6	. . .	. . .	WPT2	B 363
									F2	B 381
									F7	B 381
36.7	29.8	. . .	23.6	17.7	12.4	8.4	. . .	. . .	WPT3	B 363
									F3	B 381

Copyright ASME International
Provided by IHS under license with ASME
No reproduction or networking permitted without license from IHS
Not for Resale

APPENDIX L
ALUMINUM ALLOY PIPE FLANGES

L300 GENERAL

This Appendix covers pressure-temperature ratings, materials, dimensions, and marking of forged aluminum alloy flanges, as an alternative to applying the rules in paras. 304.5.1(b) and 304.5.2(b). DN 15 (NPS ½) through DN 600 (NPS 24) flanges may be welding neck, slip-on, socket welding, lapped, or blind in ratings PN 20, 50, and 110 (Classes 150, 300, and 600).

Requirements and recommendations regarding bolting and gaskets are included.

L301 PRESSURE-TEMPERATURE RATINGS

L301.1 Ratings Basis

Ratings are maximum allowable working gage pressures at the temperatures shown in Tables L301.2M and L301.2U for the applicable material and pressure Class. For intermediate temperatures, linear interpolation is permitted.

L301.2 Ratings of Flanged Joints

(a) In addition to the considerations in para. F312.1, consideration must be given to the low modulus of elasticity of aluminum alloys. External moments should be limited, and controlled bolt tightening or other techniques may be necessary to achieve and maintain a leak-free joint.

(b) For ratings of slip-on and socket welding flanges made of Alloy 6061-T6, see Tables L301.2M and L301.2U, Note (3).

L301.3 Temperature Considerations

Application of the ratings in this Appendix to flanged joints at both high and low temperatures shall take into consideration the risk of leakage due to forces and moments developed in the connected piping or equipment. The following provisions are intended to minimize these risks.

L301.3.1 Flange Attachment. Slip-on and socket welding flanges are not recommended for service below −50°F if flanges are subject to thermal cycling.

L301.3.2 Differential Thermal Expansion and Conductivity. Because aluminum alloys have thermal expansion coefficients approximately twice those for steel, and thermal conductivity approximately three times that of steel, it may be necessary to provide for differential expansion and expansion rates between components of the flanged joint. Consideration shall be given to thermal transients (e.g., startup, shutdown, and upset) in addition to the operating temperature of the joint.

L301.4 Hydrostatic Test

A flange shall be capable of withstanding a hydrostatic test at 1.5 times its 100°F pressure rating.

L302 MARKING

Marking shall be in accordance with MSS SP-25, except as follows. Marking shall be stamped on the edge of each flange.

L302.1 Name

The manufacturer's name or trademark shall be applied.

L302.2 Material

The marking ASTM B 247 shall be applied, followed by the applicable alloy and temper designations.

L302.3 Rating

The marking shall be the applicable rating Class: 150, 300, or 600.

L302.4 Designation

The marking B31.3L shall be applied.

L302.5 Size

The marking of NPS shall be applied. A reducing size shall be designated by its two nominal pipe sizes. See examples in Note (4) of Table 7, ASME B16.5.

L303 MATERIALS

L303.1 Flange Material

Flanges shall be forgings conforming to ASTM B 247. For specific alloys and tempers, see Tables L301.2M and L301.2U. For precautions in use, see para. 323.5 and Appendix F, para. F323.

L303.1.1 Repair Welding of Flanges. Repair welding of flanges manufactured to this Appendix shall be restricted to any damaged areas of the weld bevel of welding neck flanges unless specifically approved by the Purchaser after consideration of the extent, location,

Copyright ASME International
Provided by IHS under license with ASME
No reproduction or networking permitted without license from IHS
Not for Resale

Table L301.2M Pressure-Temperature Ratings
Pressures Are in kPa; Temperatures Are in °C

Material ASTM B 247 Alloy, Temper	PN 20 Temperature [Note (1)]				PN 50 Temperature [Note (1)]				PN 110 Temperature [Note (1)]			
	38	66	93	121	38	66	93	121	38	66	93	121
3003-H112	275	275	240	240	725	690	655	655	1415	1380	1345	1275
6061-T6 [Note (2)]	1895	1860	1825	1795	4965	4895	4825	4655	9930	9790	9655	9345
6061-T6 [Note (3)]	1265	1240	1215	1195	3310	3265	3215	3105	6620	6525	6435	6230

NOTES:
(1) The minimum temperature is −269°C (−425°F). The maximum rating below 38°C (100°F) shall be the rating shown for 38°C.
(2) Ratings apply to welding neck, lapped, and blind flanges.
(3) Ratings apply to slip-on and socket welding flanges.

Table L301.2U Pressure-Temperature Ratings
Pressures Are in psig; Temperatures Are in °F

Material ASTM B 247 Alloy and Temper	Class 150 Temperature [Note (1)]				Class 300 Temperature [Note (1)]				Class 600 Temperature [Note (1)]			
	100	150	200	250	100	150	200	250	100	150	200	250
3003-H112	40	40	35	35	105	100	95	95	205	200	195	185
6061-T6 [Note (2)]	275	270	265	260	720	710	700	675	1440	1420	1400	1355
6061-T6 [Note (3)]	185	180	175	175	480	475	465	450	960	945	935	905

NOTES:
(1) The minimum temperature is −269°C (−425°F). The maximum rating below 38°C (100°F) shall be the rating shown for 38°C.
(2) Ratings apply to welding neck, lapped, and blind flanges.
(3) Ratings apply to slip-on and socket welding flanges.

Table L303.2 Aluminum Bolting Materials

ASTM Specification	Alloy	Temper
B 211	2014	T6, T261
B 211	2024	T4
B 211	6061	T6, T261

GENERAL NOTE: Repair welding of bolting material is prohibited.

and effect on temper and ductility. Repair welding of any area other than the weld bevel on 6061-T6 welding neck flanges shall restrict the pressure/temperature ratings to those specified for slip-on and socket welding flanges in Tables L301.2M and L301.2U. Any repair welding shall be performed in accordance with para. 328.6.

L303.2 Bolting Materials

Bolting listed in Table L303.2 and in ASME B16.5, Table 1B, may be used subject to the following limitations.

L303.2.1 High Strength Bolting. Bolting materials listed as high strength in ASME B16.5, Table 1B, may be used in any flanged joints. See para. L305.

L303.2.2 Intermediate Strength Bolting. Bolting materials in Table L303.2, and bolting listed as intermediate strength in ASME B16.5, Table 1B, may be used in any flanged joints. See para. L305.

L303.2.3 Low Strength Bolting. Bolting materials listed as low strength in ASME B16.5, Table 1B, may be used in PN 20 and PN 50 (Class 150 and 300) flanged joints. See para. L305.

L303.3 Gaskets

Gaskets listed in ASME B16.5, Annex E, Fig. E1, Group 1a may be used with any rating Class and bolting.

L303.3.1 Gaskets for Low Strength Bolting. If bolting listed as low strength (see para. L303.2.3) is used, gaskets listed in ASME B16.5, Annex E, Fig. E1, Group 1a shall be used.

L303.3.2 Gaskets for PN 20 (Class 150) Flanged Joints. It is recommended that only gaskets listed in ASME B16.5, Annex E, Fig. E1, Group 1a be used.

L303.3.3 Gaskets for Class 300 and Higher Flanged Joints. It is recommended that only gaskets listed in ASME B16.5, Annex E, Fig. E1, Group 1 be used. For

Copyright ASME International
Provided by IHS under license with ASME
No reproduction or networking permitted without license from IHS
Not for Resale

gaskets in Group 1b, line flanges should be of the welding neck or lapped joint type; controlled-torque tightening practices should be used.

L304 DIMENSIONS AND FACINGS

(a) Flanges shall meet the dimensional and tolerance requirements of ASME B16.5.

(b) Flange facing and facing finish shall be in accordance with ASME B16.5, except that small male and female facings (on ends of pipe) shall not be used.

L305 DESIGN CONSIDERATIONS

The following design considerations are applicable to all flanged joints which incorporate a flange manufactured to this Appendix:

(a) The differential expansion within a flanged joint must be considered; also, see para. F312.

(b) Where a gasket other than those recommended in para. L303.3 is specified, the designer shall verify by calculations the ability of the selected bolting to seat the selected gasket and maintain a sealed joint under the expected operating conditions without over-stressing the components.

Copyright ASME International
Provided by IHS under license with ASME
No reproduction or networking permitted without license from IHS
Not for Resale

APPENDIX M
GUIDE TO CLASSIFYING FLUID SERVICES[1,2]

See Fig. M300.

Copyright ASME International
Provided by IHS under license with ASME
No reproduction or networking permitted without license from IHS
Not for Resale

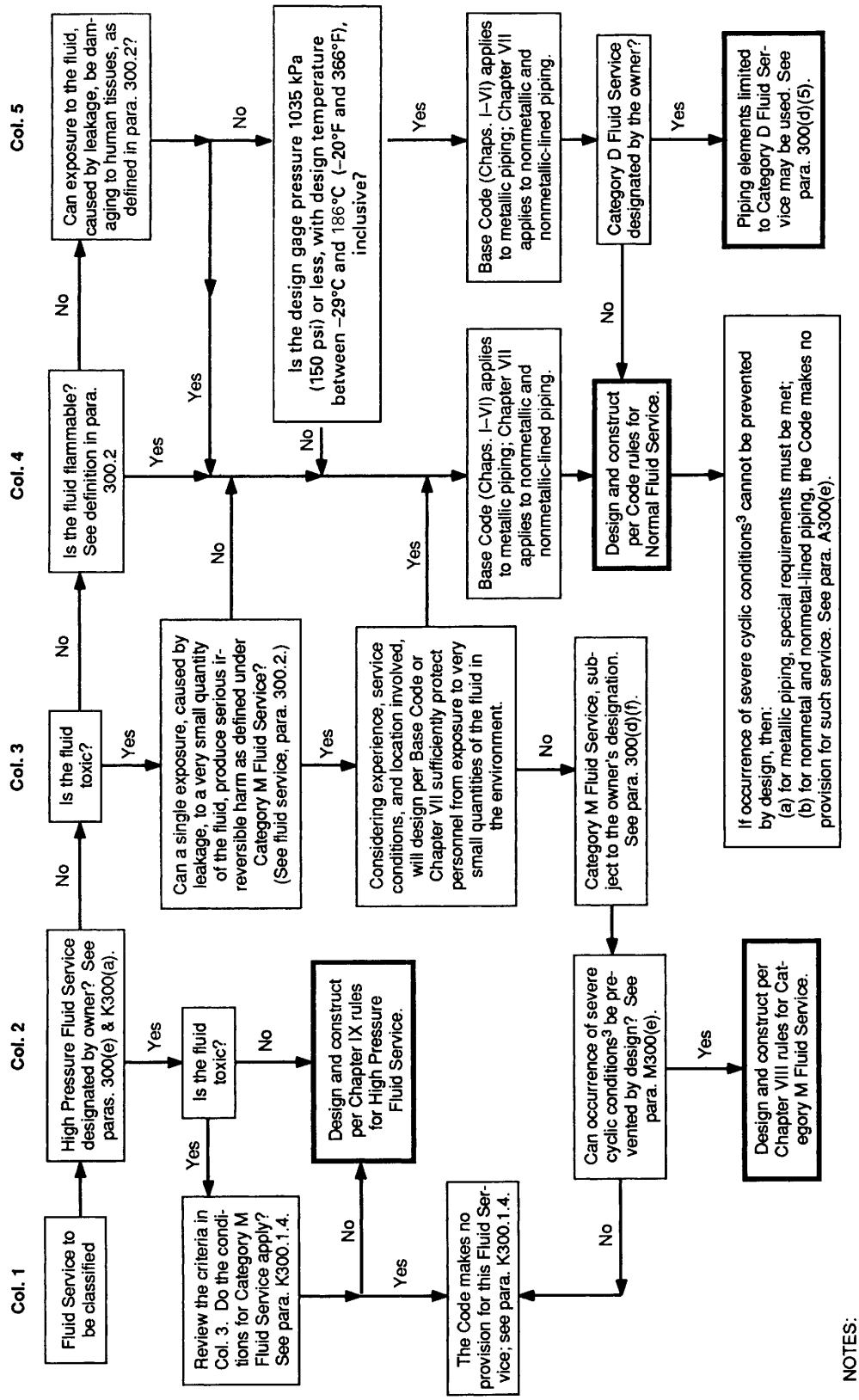

NOTES:
(1) See paras. 300(b)(1), 300(d)(4) and (5), and 300(e) for decisions the owner must make. Other decisions are the designer's responsibility; see para. 300(b)(2).
(2) The term "fluid service" is defined in para. 300.2.
(3) Severe cyclic conditions are defined in para. 300.2. Requirements are found in Chapter II, Parts 3 and 4, and in paras. 323.4.2 and 341.4.3.

Fig. M300 Guide to Classifying Fluid Services

(04)

Copyright ASME International
Provided by IHS under license with ASME
No reproduction or networking permitted without license from IHS
Not for Resale

APPENDIX P
ALTERNATIVE RULES FOR EVALUATING STRESS RANGE

(04)

P300 GENERAL

(a) This Appendix provides alternative rules for evaluating the stress range in piping systems. It considers stresses at operating conditions, including both displacement and sustained loads, rather than displacement stress range only. The method is more comprehensive than that provided in Chapter II and is more suitable for computer analysis of piping systems, including nonlinear effects such as pipes lifting off of supports.

(b) The paragraph numbers of this Appendix, except for para. P300, correspond to those of Chapters I and II of the base Code. The prefix P is used.

(c) In the application of these alternative rules, all of the provisions of Chapters I and II of the base Code apply, except those that are specifically modified by this Appendix.

P300.2 Definitions

Replace the definition of *severe cyclic conditions* with the following:

severe cyclic conditions: conditions applying to specific piping components or joints in which S_E, computed in accordance with para. P319.4.4, exceeds $0.8S_{oA}$ [as defined in para. P302.3.5(d)] and the equivalent number of cycles [N in para. P302.3.5(d)] exceeds 7000; or other conditions which the designer determines will produce an equivalent effect.

P302.3.5 Limits of Calculated Stresses Due to Sustained Loads and Displacement Strains. Replace para. 302.3.5(d) with the following. Footnotes are the same as found in para. 302.3.5(d).

(d) Allowable Operating Stress Limit. The greater of the maximum operating stress and maximum operating stress range, S_{om}, in a piping system (see para. 319.4.4) shall not exceed the allowable operating stress limit, S_{oA} (see paras. 319.2.3 and 319.3.4) calculated by Eq. (P1a). The operating stress is the calculated stress at any operating condition, including pressure, weight and other sustained loads, and displacement. Occasional loads (see para. 302.3.5) are not required to be included. The operating stress range is the range of stress between any two operating conditions, including the ranges between operating conditions and a sustained case with the piping at ambient temperature.

$$S_{oA} = 1.25 f (S_c + S_h) \qquad \text{(P1a)}$$

where

f = stress range reduction factor[4] from Table 302.3.5 or calculated by Eq. (P1c)[5]:

$$f = 6.0 (N)^{-0.2} \le 1.0 \qquad \text{(P1c)}$$

N = equivalent number of full displacement cycles during the expected service life of the piping system[6]

S_c = basic allowable stress[3] at minimum metal temperature expected during the displacement cycle under analysis

S_h = basic allowable stress[3] at maximum metal temperature expected during the displacement cycle under analysis

When the computed stress range varies, whether from thermal expansion or other conditions, S_E is defined as the greatest computed operating stress range. The value of N in such cases can be calculated by Eq. (P1d):

$$N = N_E + \sum (r_i^5 N_i) \text{ for } i = 1, 2, \ldots, n \qquad \text{(P1d)}$$

where

N_E = number of cycles of maximum computed operating stress range, S_E

N_i = number of cycles associated with operating stress range, S_i

$r_i = S_i/S_E$

S_i = any computed operating stress range smaller than S_E

P319.4.4 Flexibility Stresses. Paragraph 319.4.4 is applicable, except that subparagraph (a) and Eq. (17) are replaced with the following:

(a) The stress due to bending, torsion, and axial loads shall be computed using the reference modulus of elasticity at 21°C (70°F), E_a, except as provided in para. 319.2.2(b)(4), and then combined in accordance with Eq. (P17a) to determine the operating stress, S_o, and Eq. (P17b) to determine the operating stress range, S_E. S_{om} is the greater of the maximum operating stress, S_o, and maximum operating stress range, S_E, which shall not exceed the allowable stress, S_{oA}, in para. P302.3.5(d). S_E is the maximum operating stress range, which is used in calculating N in para. P302.3.5(d) and in determining if the pipe is under severe cyclic conditions.

$$S_o = \sqrt{(|S_a| + S_b)^2 + 4S_t^2} \qquad \text{(P17a)}$$

Copyright ASME International
Provided by IHS under license with ASME
No reproduction or networking permitted without license from IHS
Not for Resale

$$S_E = \sqrt{(|S_a| + S_b)^2 + 4S_t^2} \quad \text{(P17b)}$$

The definitions in para. 319.4.4 apply, with the following additional definitions:

A_p = cross-sectional area of the pipe
F_a = axial force, including that due to internal pressure
i_a = axial force stress intensification factor. In the absence of more applicable data, $i_a = 1.0$ for elbows and $i_a = i_o$ from Appendix D for other components.
S_a = stress due to axial force = $i_a F_a / A_p$

P319.4.5 Required Weld Quality Assurance. Paragraph 319.4.5 applies, except that S_{oA} replaces S_A.

P319.5 Reactions

Replace para. 319.5 with the following:

Reaction forces and moments used to design restraints and supports for a piping system, and to evaluate the effects of piping displacement on connected equipment, shall be based on the maximum load from operating conditions, including weight, pressure, and other sustained loads; thermal displacement; and, where applicable, occasional loads. The reactions shall be calculated using the modulus of elasticity at the temperature of the condition, E_m (E_a may be used instead of E_m when it provides a more conservative result). The temperature of the condition may differ in different locations within the piping system.

Where cold spring is used in the piping system, experience has shown that it cannot be fully assured. Therefore, the reactions shall be computed both with the assumption that only $\frac{2}{3}$ of the design cold spring is present, and with $\frac{4}{3}$ of the design cold spring present.

If it is necessary to determine the reactions at ambient temperature, the designer shall consider loads at that condition, including the design cold spring and self springing of piping. Self springing may occur if the operating stress in the piping system exceeds the yield strength of the material or if the piping operates at temperatures in the creep range of the material.

P319.5.1 Maximum Reactions for Simple Systems. Paragraph 319.5.1 is not applicable.

P319.5.2 Maximum Reactions for Complex Systems. Paragraph 319.5.2 is not applicable.

Copyright ASME International
Provided by IHS under license with ASME
No reproduction or networking permitted without license from IHS
Not for Resale

APPENDIX Q
QUALITY SYSTEM PROGRAM

[This Appendix is a Code requirement only when specified by the owner in accordance with para. 300(b)(1).]

Design, construction, inspection, examination, testing, manufacture, fabrication, and erection of piping in accordance with this Code shall be performed under a Quality System Program following the principles of an appropriate standard such as the ISO 9000 series.[1] The details describing the quality system shall be documented and shall be available upon request. A determination of the need for registration and/or certification of the quality system program shall be the responsibility of the owner.

---

[1] The series is also available from the American National Standards Institute (ANSI) and the American Society for Quality (ASQ) as American National Standards that are identified by a prefix "Q" replacing the prefix "ISO." Each standard of the series is listed under Appendix E.

--`,,```,,,,````-`-`,,`,,`,`,,`---
Copyright ASME International
Provided by IHS under license with ASME
No reproduction or networking permitted without license from IHS
Not for Resale

(04)

APPENDIX S
PIPING SYSTEM STRESS ANALYSIS EXAMPLES

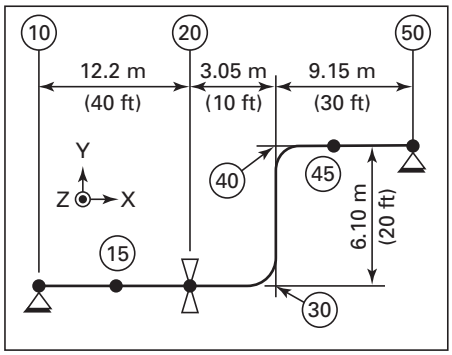

Fig. S301.1 Simple Code Compliant Model

Table S301.1 Temperature/Pressure Combinations

Condition	Pressure	Temperature
Design conditions	3795 kPa (550 psi)	288°C (550°F)
Operating (P_1,T_1) maximum metal temperature	3450 kPa (500 psi)	260°C (500°F)
Operating (P_2,T_2) minimum metal temperature	0 kPa (0 psi)	−1°C (30°F)
Installation temperature	0 kPa (0 psi)	21°C (70°F)

S300 INTRODUCTION

The example in this Appendix is intended to illustrate the application of the rules and definitions in Chapter II, Part 5, Flexibility and Support; and the stress limits of para. 302.3.5. The loadings and conditions necessary to comply with the intent of the Code are presented.

S300.1 Definitions

global axes: These are Cartesian X, Y, and Z axes. In this Appendix, vertically upward is taken to be the +Y direction with gravity acting in the −Y direction.

load designations:

P_j: piping internal pressure; see para. 301.2; when more than one condition exists for the piping system, each is subscripted (e.g., P_1, P_2, …)

T_j: pipe maximum or minimum metal temperature; see paras. 301.3 and 319.3.1(a); when more than one condition exists for the piping system, each is subscripted (e.g., T_1, T_2, …)

S301 EXAMPLE 1: CODE COMPLIANT PIPING SYSTEM

S301.1 Example Description

This example is intended to illustrate the design of an adequately supported and sufficiently flexible piping system. The piping system in Fig. S301.1 is fabricated from ASTM A 106 Grade B seamless pipe (i.e., E = 1.00); the pipe is DN 400 (NPS 16) with a nominal wall thickness of 9.53 mm (0.375 in.), 127 mm (5 in.) thickness of calcium silicate insulation, and 1.59 mm (0.063 in.) corrosion allowance; the fluid has a specific gravity of 1.0. The equivalent number of cycles expected for the piping system is fewer than 7000 [i.e., f = 1.00 in accordance with para. 302.3.5(d)].

The piping system is in normal fluid service. The installation temperature is 21°C (70°F). The reference modulus of elasticity used for the piping analysis is 203.4 GPa (29.5 Msi) from Appendix C, Table C-6 in accordance with paras. 319.3.2 and 319.4.4, and Poisson's ratio is 0.3 in accordance with para. 319.3.3.

The piping internal pressure, maximum and minimum metal temperatures expected during normal operation, and the design conditions are listed in Table S301.1. The design conditions are set sufficiently in excess of the operating conditions so as to provide additional margin on the allowable stress for pressure design as required by the owner.

S301.2 Design Conditions

The design conditions establish the pressure rating, flange ratings, component ratings, and minimum required pipe wall thickness in accordance with para. 301.2.1. For example, ASME B16.5 requires a minimum of Class 300 for ASTM A 105 flanges. Also, the minimum required pipe wall thickness, t_m, is determined from the design conditions by inserting Eq. (3a) into Eq. (2); terms are defined in para. 304.1.1 and Appendix J:

E = 1.0
P = design pressure
= 3795 kPa (550 psi)
S = allowable stress from Appendix A, Table A-1

Copyright ASME International
Provided by IHS under license with ASME
No reproduction or networking permitted without license from IHS
Not for Resale

= 125 MPa (18.1 ksi) at design temperature 288°C (550°F)

Y = 0.4 from Table 304.1.1

Insert Eq. (3a) into Eq. (2):

$$t_m = t + c = \frac{PD}{2(SE + PY)} + c$$

$$= \frac{(3795 \text{ kPa})(406.4 \text{ mm})}{2[(125 \text{ MPa})(1.00) + (3795 \text{ kPa})(0.4)]} + 1.59 \text{ mm}$$

$$= 6.10 \text{ mm} + 1.59 \text{ mm} = 7.69 \text{ mm (0.303 in.)}$$

In accordance with para. 304.1.2(a), t must be less than $D/6$ for Eq. (3a) to be appropriate without considering additional factors to compute the pressure design thickness, t (i.e., $t < D/6$, or 7.69 mm < 406.4 mm/6). Since 7.69 mm (0.303 in.) < 67.7 mm (2.67 in.), Eq. (3a) is applicable without special consideration of factors listed in para. 304.1.2(b).

Now select a pipe schedule of adequate thickness. Determine the specified minimum pipe wall thickness, T, from nominal pipe wall thickness, $\overline{T}$, considering a mill tolerance of 12.5%.

Select DN 400 (NPS 16) Schedule 30/STD nominal wall thickness from ASME B36.10M:

$\overline{T}$ = 9.53 mm (0.375 in.)

T = (9.53 mm)(1.00 − 0.125) = 8.34 mm (0.328 in.)

Since $T \geq t_m$ (i.e., 8.34 mm > 7.69 mm), the selection of the nominal pipe wall thickness, $\overline{T}$, for Schedule 30/STD pipe is acceptable. The long radius elbows specified for this piping system are in accordance with ASME B16.9 and are specified to be for use with Schedule 30/STD wall thickness pipe.

S301.3 Computer Model Input

Tables S301.3.1 and S301.3.2 list the "node numbers," lengths, etc., for each piping "element" displayed in Fig. S301.1. A bend radius of 1.5 times the nominal pipe diameter [i.e., 609.6 mm (24 in.)] and nominal wall thickness of 9.53 mm (0.375 in.) are used for the elbows in the computer model.

Generic computer program option "flags" are as follows:

(a) include pressure stiffening on elbows

(b) exclude pressure thrust and Bourdon effects

(c) use nominal section properties for both the stiffness matrix and the displacement stress analysis

(d) use "nominal less allowances" section properties for sustained stress, S_L

(e) include axial load and internal pressure force in the sustained stress, S_L

Table S301.3.1 Generic Pipe Stress Model Input

Term	Value
Operating conditions:	
internal pressure, P_1	3450 kPa (500 psi)
maximum metal temp., T_1	260°C (500°F)
minimum metal temp., T_2	−1°C (30°F)
installation temperature	21°C (70°F)
Line size	DN 400 (NPS 16)
Pipe	Schedule 30/STD, 9.53 mm (0.375 in.)
Mechanical allowance, c	1.59 mm (0.063 in.)
Mill tolerance	12.5%
Elbows	Long radius
Fluid specific gravity	1.0
Insulation thickness	127 mm (5 in.)
Insulation density	176 kg/m^3 (11.0 lbm/ft^3)
Pipe material	ASTM A 106 Grade B
Pipe density	7833.4 kg/m^3 (0.283 lbm/in.^{3})
Total weight	7439 kg (16,400 lbm)
Unit weight	248.3 kg/m (166.9 lbm/ft)

(f) intensify the elbows' in-plane bending moments[1] by $0.75i_i$ (≥ 1.0) in the calculation of the elbows' effective sustained longitudinal stress, S_L

S301.4 Pressure Effects

For the operating, sustained, and displacement stress range load cases, the effect of pressure stiffening on the elbows is included to determine the end reactions in accordance with Appendix D, Note (7). The effects of pressure-induced elongation and Bourdon effects are not included, as both are deemed negligible for this particular example.

S301.5 The Operating Load Case

The operating load case is used to determine the operating position of the piping and reaction loads for any attached equipment, anchors, supports, guides, or stops. The operating load case is based on the temperature range from the installation temperature of 21°C (70°F) to the maximum operating metal temperature of 260°C (500°F), in accordance with para. 319.3.1(b). The operating load case in this example also includes the effects of internal pressure, pipe weight, insulation weight, and fluid weight on the piping system. Both pipe stiffness and stress are based on the nominal thickness of the pipe. Pipe deflections and internal reaction loads for

[1] ASME B31.3 does not address the issue of using a stress intensification factor as the stress index to be applied to piping components for sustained loads; stress intensification factors are based on fatigue test results. Establishing the proper index is the responsibility of the designer. This example uses 0.75 times the stress intensification factor for the sustained case.

Copyright ASME International
Provided by IHS under license with ASME
No reproduction or networking permitted without license from IHS Not for Resale

Table S301.3.2 Element Connectivity, Type, and Lengths

From	To	D_X, m (ft)	D_Y, m (ft)	Element Type
10	15	6.10 (20)	. . .	10 – anchor 15 – bisection node
15	20	6.10 (20)	. . .	20 – "Y" support
20	30	3.05 (10)	. . .	Three-node elbow [Note (1)]
30	40	. . .	6.10 (20)	Three-node elbow [Note (1)]
40	45	3.05 (10)	. . .	Informational node
45	50	6.10 (20)	. . .	50 – anchor

GENERAL NOTE: This piping system is planar, i.e., $D_Z = 0$ m (ft) for each piping element.

NOTE:

(1) The specified element lengths are measured to and/or from each elbow's tangent intersection point.

Table S301.5.1 Operating Load Case Results: Internal Loads and Deflections

Node Number	Axial Force, N (lb) (Signed) [Note (1)]	Bending Moment, N-m (ft-lb) (Unsigned) [Note (1)]	Horizontal Deflection, mm (in.) [Note (1)]	Vertical Deflection, mm (in.) [Note (1)]
10	+26 500 (+5,960)	21 520 (15,870)	0.00	0.00
15	−26 500 (−5,960)	10 710 (7,900)	18.3 (0.72)	−1.3 (−0.05)
20	−26 500 (−5,960)	47 560 (35,080)	36.7 (1.44)	0.00
30 near	−26 500 (−5,960)	57 530 (42,440)	44.0 (1.73)	−3.7 (−0.14)
30 mid	−46 300 (−10,410)	69 860 (51,530)	44.7 (1.76)	−2.3 (−0.09)
30 far	−37 800 (−8,500)	65 320 (48,180)	41.4 (1.63)	0.4 (0.02)
40 near	−25 920 (−5,830)	63 930 (47,160)	−23.0 (−0.91)	15.1 (0.59)
40 mid	−36 250 (−8,150)	70 860 (52,270)	−26.4 (−1.04)	17.8 (0.70)
40 far	−26 500 (−5,960)	65 190 (48,080)	−25.7 (−1.01)	19.2 (0.75)
45	−26 500 (−5,960)	14 900 (10,990)	−18.3 (−0.72)	13.5 (0.53)
50	−26 500 (−5,960)	47 480 (35,030)	0.00	0.00

NOTE:

(1) Loads and deflections are averaged from commercial programs with a variance within units' conversion tolerance.

the operating load case are listed in Table S301.5.1. Piping loads acting on the anchors and support structure are listed in Table S301.5.2.

S301.6 The Sustained Load Case

Sustained stresses due to the axial force, internal pressure, and intensified bending moment in this example are combined to determine the sustained longitudinal stress, S_L. The sustained load case excludes thermal effects and includes the effects of internal pressure [P_1 = 3450 kPa (500 psi)], pipe weight, insulation weight, and fluid weight on the piping system.

Nominal section properties are used to generate the stiffness matrix and sustained loads for the computer model in accordance with para. 319.3.5. The nominal thickness, less allowances, is used to calculate the section properties for the sustained stress, S_L, in accordance with para. 302.3.5(c).

A summary of the sustained load case internal reaction forces, moments, and sustained stresses, S_L, is provided in Table S301.6. Since this example model lies in only one plane, only the sustained bending stress due to the in-plane bending moment is not zero. The in-plane bending moment is intensified[1] at each elbow by the appropriate index $0.75i_i$ (≥ 1.0), where i_i is the in-plane stress intensification factor from Appendix D for an unflanged elbow. Note that sustained stresses for the nodes listed in Table S301.6 do not exceed the 130 MPa (18,900 psi) sustained allowable stress, S_h, for A 106 Grade B piping at the maximum metal temperature, T_1 = 260°C (500°F), from Appendix A, Table A-1. By

Copyright ASME International
Provided by IHS under license with ASME
No reproduction or networking permitted without license from IHS Not for Resale

Table S301.5.2 Operating Load Case Results: Reaction Loads on Supports and Anchors

	Global Axis Forces and Moments		
Node	F_X, N (lb) (Signed) [Note (1)]	F_Y, N (lb) (Signed) [Note (1)]	M_Z, N-m (ft-lb) (Unsigned) [Note (1)]
10 anchor	−26 500 (−5,960)	−12 710 (−2,860)	21 520 (15,870)
20 support	. . .	−63 050 (−14,180)	. . .
50 anchor	+26 500 (+5,960)	+2 810 (+630)	47 480 (35,030)

NOTE:
(1) Loads and deflections are averaged from commercial programs with a variance within units' conversion tolerance.

Table S301.6 Sustained Forces and Stresses [Allowable, S_h = 130 MPa (18,900 psi)]

Node	Axial Force, N (lb) (Signed) [Note (1)]	Bending Moment, N-m (ft-lb) (Unsigned) [Note (1)]	Sustained Stress, S_L, kPa (psi) [Note (2)]
10 anchor	+3 270 (+735)	17 260 (12,730)	59 100 (8,560)
20 support	−3 270 (−735)	56 130 (41,400)	99 200 (14,370)
30 far	−19 880 (−4,470)	16 320 (12,040)	72 700 (10,540)
40 far	+3 270 (+735)	2 340 (1,730)	46 050 (6,680)
50 anchor	+3 270 (+735)	37 860 (27,930)	80 350 (11,650)

NOTES:
(1) Loads, deflections, and stresses are averaged from commercial programs with a variance within units' conversion tolerance.
(2) Axial forces have their sign retained and do not include the signed axial pressure force, which is also included in the sustained stress, S_L.

limiting S_L to the sustained allowable, S_h, the piping system is deemed adequately protected against collapse.

S301.7 The Displacement Stress Range Load Case

The displacement stress range, S_E, in this example is based on the temperature range from the installation [21°C (70°F)] to minimum metal temperature [T_2 = −1°C (30°F)] and from the installation [21°C (70°F)] to maximum metal temperature for the thermal cycles under analysis [T_1 = 260°C (500°F)], in accordance with para. 319.3.1(a). The displacement stress range, S_E, for each element is calculated in accordance with Eq. (17) and is listed in Table S301.7, along with the internal reaction loads. Nominal section properties are used to generate the stiffness matrix and displacement stress in the piping in accordance with para. 319.3.5. Since this example model lies in only one plane, only the in-plane bending moment is not zero. The in-plane moment is intensified at each elbow by the appropriate Appendix D stress intensification factor, i_i, for an unflanged elbow.

For simplicity, the allowable displacement stress range, S_A, is calculated in accordance with Eq. (1a). Though Eq. (1a) is used in this example, it is also acceptable to calculate S_A in accordance with Eq. (1b), which permits S_A to exceed the Eq. (1a) value for each piping element, based on the magnitude of each element's sustained stress, S_L.

Terms are as defined in para. 302.3.5(d) and Appendix J:

f = 1.00 for ≤ 7000 equivalent cycles, from Fig. 302.3.5 or Eq. (1c)

$S_A = f(1.25S_c + 0.25S_h)$
= (1.00)[(1.25)(138 MPa) + (0.25)(130 MPa)]
= 205 MPa (29,725 psi)

S_c = allowable stress from Appendix A, Table A-1
= 138 MPa (20.0 ksi) at T_2

S_h = allowable stress from Appendix A, Table A-1
= 130 MPa (18.9 ksi) at T_1

T_1 = maximum metal temperature
= 260°C (500°F)

T_2 = minimum metal temperature
= −1°C (30°F)

Copyright ASME International
Provided by IHS under license with ASME
No reproduction or networking permitted without license from IHS Not for Resale

Table S301.7 Displacement Stress Range [S_A = 205 MPa (29,725 psi)]

	Global Axis Forces and Moments			
Node	F_X, N (lb) (Unsigned) [Note (1)]	F_Y, N (lb) (Unsigned) [Note (1)]	M_Z, N-m (ft-lb) (Unsigned) [Note (1)]	S_E From Eq. (17), kPa (psi) [Note (1)]
10 anchor	25 070 (5,640)	1 130 (260)	4 600 (3,390)	4 000 (580)
20 support	25 070 (5,640)	1 130 (260)	9 250 (6,820)	8 040 (1,170)
30 mid	25 070 (5,640)	19 330 (4,350)	60 250 (44,440)	137 000 (19,870)
40 mid	25 070 (5,640)	19 330 (4,350)	76 740 (56,600)	174 500 (25,300)
50 anchor	25 070 (5,640)	19 330 (4,350)	92 110 (67,940)	79 900 (11,600)

NOTE:
(1) Loads, deflections, and stresses are averaged from commercial programs with a variance within units' conversion tolerance.

Note that each piping element's displacement stress range, based on minimum to maximum metal temperature for the thermal cycles under analysis, S_E, does not exceed the Eq. (1a) allowable, S_A. By limiting S_E to S_A, the piping system is deemed adequate to accommodate up to 7000 full excursion equivalent cycles.

Considering both the sustained and displacement stress range load cases, the piping system is compliant with the requirements of the Code; redesign of the piping system is not required unless the sustained or operating reaction loads at either anchor data point 10 or 50 exceed the allowable loads for the attached equipment nozzle or the support structure at node 20 is overloaded. The nozzle load and support structure analyses are beyond the scope of this Appendix and are not addressed.

Copyright ASME International
Provided by IHS under license with ASME
No reproduction or networking permitted without license from IHS
Not for Resale

APPENDIX V
ALLOWABLE VARIATIONS IN ELEVATED TEMPERATURE SERVICE

V300 APPLICATION

(a) This Appendix covers application of the Linear Life Fraction Rule, which provides a method for evaluating variations at elevated temperatures above design conditions where material creep properties [see para. V302(c)] control the allowable stress at the temperature of the variation. This Appendix is a Code requirement only when specified by the owner in accordance with the last sentence of para. 302.2.4(f)(1).

(b) Life Fraction analysis addresses only the gross strength of piping components; it does not consider local stress effects. It is the designer's responsibility to provide construction details suitable for elevated temperature design.

V300.1 Definitions

operating condition: any condition of pressure and temperature under which the design conditions are not exceeded.

excursion: any condition under which pressure or temperature, or both, exceed the design conditions.

service condition: any operating condition or excursion.

duration

(a) the extent of any service condition, hours

(b) the cumulative extent of all repetitions of a given service condition during service life, hours

service life: the life assigned to a piping system for design purposes, hours.

V301 DESIGN BASIS

Life Fraction analysis shall be performed in accordance with one of the following design basis options selected by the owner.

(a) All service conditions in the creep range and their durations are included.

(b) To simplify the analysis, less severe service conditions need not be individually evaluated if their durations are included with the duration of a more severe service condition.

V302 CRITERIA

(a) All of the criteria in para. 302.2.4 shall be met.

(b) Only carbon steels, low and intermediate alloy steels, austenitic stainless steels, and high nickel alloys are included.

(c) Service conditions are considered only in the calculation of the usage factors in accordance with para. V303 when the allowable stress at the temperature of those conditions in Table A-1 is based on the creep criteria stated in para. 302.3.2.

(d) Creep-fatigue interaction effects shall be considered when the number of cycles exceeds 100.

V303 PROCEDURE

The cumulative effect of all service conditions during the service life of the piping is determined by the Linear Life Fraction Rule in accordance with the following procedure.

V303.1 Calculations for Each Service Condition *i*

The following steps shall be repeated for each service condition considered.

V303.1.1 Equivalent Stress for Pressure

(a) Using Eq. (V1), compute a pressure-based equivalent stress S_{pi}:

$$S_{pi} = S_d P_i / P_{\max.} \quad \text{(V1)}$$

where

P_i = gage pressure, kPa (psi), during service condition i

$P_{\max.}$ = maximum allowable gage pressure, kPa (psi), for continuous operation of pipe or component at design temperature

S_d = allowable stress, MPa (ksi) at design temperature, °C (°F)

S_{pi} = pressure-based equivalent stress, MPa (ksi)

(b) Compute the maximum longitudinal stress S_L during service condition i, in accordance with para. 302.3.5(c).

(c) The equivalent stress S_i for use in para. V303.1.2, is the greater of the values calculated in (a) and (b) above.

Copyright ASME International
Provided by IHS under license with ASME
No reproduction or networking permitted without license from IHS
Not for Resale

V303.1.2 Effective Temperature. From Table A-1 find the temperature corresponding to the equivalent stress S_i using linear interpolation if necessary. This temperature T_E is the effective temperature for service condition i.

V303.1.3 Larson-Miller Parameter. Compute the *LMP* for the basic design life for service condition i, using Eq. (V2):

$$\left.\begin{array}{ll} \text{SI metric:} & LMP = (C + 5)(T_E + 273) \\ \text{U.S.:} & LMP = (C + 5)(T_E + 460) \end{array}\right\} \quad \text{(V2)}$$

where

C = 20 (carbon, low, and intermediate alloy steels)
= 15 (austenitic stainless steel and high nickel alloys)
T_E = effective temperature, °C (°F); see para. V303.1.2

V303.1.4 Rupture Life. Compute the rupture life, t_{ri}, hr, using Eq. (V3):

$$t_{ri} = 10^a \quad \text{(V3)}$$

where

$$\text{SI metric:} \quad a = \frac{LMP}{T_i + 273} - \text{C}$$

$$\text{U.S.:} \quad a = \frac{LMP}{T_i + 460} - \text{C}$$

and

T_i = actual temperature, °C (°F), during service condition i
t_{ri} = allowable rupture life, hr, associated with a given service condition i and stress S_i

LMP and *C* are as defined in para. V303.1.3.

V303.2 Determine Creep-Rupture Usage Factor

The usage factor u is the summation of individual usage factors t_i/t_{ri} for all service conditions considered in para. V303.1. See Eq. (V4):

$$u = \sum(t_i/t_{ri}) \quad \text{(V4)}$$

where

i = as a subscript, 1 for the prevalent operating condition; i = 2, 3, etc. for each of the other service conditions considered
t_i = total duration, hr, associated with any service condition i, at pressure P_i and temperature T_i
t_{ri} = as defined in para. V303.1.4

V303.3 Evaluation

The calculated value of u indicates the nominal amount of creep-rupture life expended during the service life of the piping system. If $u \le 1.0$, the usage factor is acceptable including excursions. If $u > 1.0$, the designer shall either increase the design conditions (selecting piping system components of a higher allowable working pressure if necessary) or reduce the number and/or severity of excursions until the usage factor is acceptable.

V304 EXAMPLE (04)

The following example illustrates the application of the procedure in para. V303.

Pipe material: A335, Gr. P22
Design pressure: 250 psig
Design temperature: 1050°F
Total service life: 200,000 hr

Three service conditions are considered:

(a) Normal operation is 178,000 hr at 250 psig, 1025°F.

(b) Expect up to 20,000 hr at design conditions of 250 psig, 1050°F.

(c) Total of 2000 hr at excursion condition of 330 psig, 1050°F. (This is a 32% variation above the design pressure and it complies with the criteria of para. 302.2.4.)

Compute pressure-based equivalent stress S_{pi} from Eq. (V1).

From Table A-1, S_d = 5.1 ksi at 1050°F.

$$S_{p1} = 5.1\ (250/250) = 5.10$$
$$S_{p2} = 5.1\ (250/250) = 5.10$$
$$S_{p3} = 5.1\ (330/250) = 6.73$$

NOTE: In Eq. (V1), design pressure is used in this example for P_{max}, as this will always be conservative. Alternatively, the actual P_{max} of the piping system can be used.

The maximum longitudinal stress S_L for each condition i, calculated in accordance with para. 302.3.5(c), is less than S_{pi}. Therefore, S_i is as follows:

$$S_1 = S_{p1} = 5.10$$
$$S_2 = S_{p2} = 5.10$$
$$S_3 = S_{p3} = 6.73$$

From Table A-1, find the temperature, T_D, corresponding to each S_i:

$$T_D = 1050°\text{F}$$
$$T_D = 1050°\text{F}$$
$$T_D = 1020°\text{F}$$

Compute the *LMP* for each condition i using Eq. (V2):

$$LMP = (20 + 5)(1050 + 460) = 37{,}750$$
$$LMP = (20 + 5)(1050 + 460) = 37{,}750$$
$$LMP = (20 + 5)(1020 + 460) = 37{,}000$$

Compute the rupture life, t_{ri}, using Eq. (V3):

$$a = 37{,}750/(1025 + 460) - 20 = 5.42$$
$$t_{r1} = 10^{5.42} = 263{,}000 \text{ hr}$$

$$a = 37{,}750/(1050 + 460) - 20 = 5.00$$
$$t_{r2} = 10^{5.00} = 100{,}000 \text{ hr}$$

Copyright ASME International
Provided by IHS under license with ASME
No reproduction or networking permitted without license from IHS
Not for Resale

$$a = 37{,}000/(1050 + 460) - 20 = 4.50$$
$$t_{r3} = 10^{4.50} = 31{,}600 \text{ hr}$$

Compute the usage factor, u, the summation of t_i/t_{ri}, for all service conditions:

$$t_1/t_{r1} = 178{,}000/263{,}000 = 0.68$$
$$t_2/t_{r2} = 20{,}000/100{,}000 = 0.20$$
$$t_3/t_{r3} = 2{,}000/31{,}600 = 0.06$$
$$u = 0.68 + 0.20 + 0.06 = 0.94 < 1.0$$

Therefore, the excursion is acceptable.

Copyright ASME International
Provided by IHS under license with ASME
No reproduction or networking permitted without license from IHS Not for Resale

(04)

APPENDIX X
METALLIC BELLOWS EXPANSION JOINTS

(Design requirements of Appendix X are dependent on and compatible with EJMA standards.)

X300 GENERAL

The intent of this Appendix is to set forth design, manufacturing, and installation requirements and considerations for bellows type expansion joints, supplemented by the EJMA standards. It is intended that applicable provisions and requirements of Chapters I through VI of this Code shall be met, except as modified herein. This Appendix does not specify design details. The detailed design of all elements of the expansion joint is the responsibility of the manufacturer. This Appendix is not applicable to expansion joints in piping designed in accordance with Chapter IX.

X301 PIPING DESIGNER RESPONSIBILITIES

The piping designer shall specify the design conditions and requirements necessary for the detailed design and manufacture of the expansion joint in accordance with para. X301.1 and the piping layout, anchors, restraints, guides, and supports required by para. X301.2.

X301.1 Expansion Joint Design Conditions

The piping designer shall specify all necessary design conditions including the following.

X301.1.1 Static Design Conditions. The design conditions shall include any possible variations of pressure or temperature, or both, above operating levels. Use of a design metal temperature other than the fluid temperature for any component of the expansion joint shall be verified by computation, using accepted heat transfer procedures, or by test or measurement on similarly designed equipment in service under equivalent operating conditions.

X301.1.2 Cyclic Design Conditions. These conditions shall include coincident pressure, temperature, imposed end displacements and thermal expansion of the expansion joint itself, for cycles during operation. Cycles due to transient conditions (startup, shutdown, and abnormal operation) shall be stated separately. (See EJMA standards, C-4.1.5.2 on cumulative fatigue analysis, for guidance in defining cycles.)

X301.1.3 Other Loads. Other loads, including dynamic effects (such as wind, thermal shock, vibration, seismic forces, and hydraulic surge); and static loads, such as weight (insulation, snow, ice, etc.), shall be stated.

X301.1.4 Fluid Properties. Properties of the flowing medium pertinent to design requirements, including the owner-designated fluid service category, flow velocity and direction, for internal liners, etc., shall be specified.

X301.1.5 Other Design Conditions. Other conditions that may affect the design of the expansion joint, such as use of shrouds, external or internal insulation, limit stops, other constraints, and connections in the body (e.g., drains or bleeds) shall be stated.

X301.2 Piping Design Requirements

X301.2.1 General. Piping layout, anchorage, restraints, guiding, and support shall be designed to avoid imposing motions and forces on the expansion joint other than those for which it is intended. For example, a bellows expansion joint is not normally designed to absorb torsion. Pipe guides, restraints, and anchorage shall conform to the EJMA standards. Anchors and guides shall be provided to withstand expansion joint thrust forces when not self-restrained by tie rods, hinge bars, pins, etc. (See para. X302.1.) Column buckling of the piping (e.g., due to internal fluid pressure) shall also be considered.

X301.2.2 Design of Anchors

(a) Main Anchors. Main anchors shall be designed to withstand the forces and moments listed in X301.2.2(b), and pressure thrust, defined as the product of the effective thrust area of the bellows and the maximum pressure to which the joint will be subjected in operation. Consideration shall be given to the increase of pressure thrust loads on anchors due to unrestrained expansion joints during leak testing if supplemental restraints are not used during the test (see para. 345.3.3). For convoluted, omega, or disk type joints, the effective thrust area recommended by the manufacturer shall be used. If this information is unavailable, the area shall be based on the mean diameter of the bellows.

(b) Intermediate Anchors. Anchors shall be capable of withstanding the following forces and moments:

Copyright ASME International
Provided by IHS under license with ASME
No reproduction or networking permitted without license from IHS
Not for Resale

(1) those required to compress, extend, offset, or rotate the joint by an amount equal to the calculated linear or angular displacement

(2) static friction of the pipe in moving on its supports between extreme extended and contracted positions (with calculated movement based on the length of pipe between anchor and expansion joint)

(3) operating and transient dynamic forces caused by the flowing medium

(4) other piping forces and moments

X302 EXPANSION JOINT MANUFACTURER RESPONSIBILITIES

The expansion joint manufacturer shall provide the detailed design and fabrication of all elements of the expansion joint in accordance with the requirements of the Code and the engineering design. This includes:

(a) all piping within the end connections of the assembly supplied by the manufacturer, including pipe, flanges, fittings, connections, bellows, and supports or restraints of piping

(b) specifying the need for supports or restraints external to the assembly as required, and of the data for their design

(c) determining design conditions for all components supplied with the expansion joint which are not in contact with the flowing medium

X302.1 Expansion Joint Design

The design of bellows type expansion joints shall be based on recognized and accepted analysis methods and the design conditions stated in para. X301.1. Convoluted type bellows shall be designed in accordance with the EJMA standards, except as otherwise required or permitted herein. Design of other types of bellows shall be qualified as required by para. 304.7.2.

X302.1.1 Factors of Safety. The factor of safety on squirm pressure shall be not less than 2.25. The factor of safety on ultimate rupture pressure shall be not less than 3.0.

X302.1.2 Design Stress Limits. For convoluted type bellows, stresses shall be calculated either by the formulas shown in the EJMA standards or by other methods acceptable to the owner.

(a) The circumferential and meridional membrane stress in the bellows, the tangent end, and reinforcing ring members (including tensile stress in fasteners) due to design pressure shall not exceed the allowable stress values given in Table A-1.

(b) Meridional membrane and bending stresses at design pressure shall be of a magnitude which will not result in permanent deformation of the convolutions at test pressure. Correlation with previous test data may be used to satisfy this requirement.

For an unreinforced bellows, annealed after forming, the meridional membrane plus bending stress in the bellows shall not exceed 1.5 times the allowable stress given in Table A-1.

(c) Direct tensile, bearing, and shear stresses in restraints (tie rods, hinge bars, pins, etc.), in self-restrained expansion joints, and in the attachments of the restraining devices to the pipe or flanges, shall not exceed the allowable stress limits stated in para. 302.3.1. Restraints shall be designed to withstand the full design pressure thrust. **(04)**

(d) Pressure design of pipe sections, fittings, and flanges shall meet the requirements of paras. 303 and 304.

(e) When the operating metal temperature of the bellows element is in the creep range,[1] the design shall be given special consideration and, in addition to meeting the requirements of this Appendix, shall be qualified as required by para. 304.7.2. **(04)**

X302.1.3 Fatigue Analysis

(a) A fatigue analysis[1] which takes into account all design cyclic conditions shall be performed and the calculated design cycle life shall be reported. The method of analysis for convoluted U-shaped bellows shall be in accordance with EJMA standards.

(b) Material design fatigue curves for as-formed austenitic stainless steel bellows are provided in Fig. X302.1.3. The curves are for use only with the EJMA stress equations. Fatigue testing by individual manufacturers, in accordance with (d) below, is required to qualify use of the pertinent fatigue curve for bellows manufactured by them. Fatigue testing in accordance with (e) below is required to develop fatigue curves for bellows of materials other than as-formed stainless steel. Fatigue test and evaluation procedures are described in (c) below. The allowable stress range for a U-shaped bellows shall be determined by multiplying the total stress range from Fig. X302.1.3 by the product of X_f times X_m, factors determined in accordance with (c), (d), and (e) below.

(c) Fatigue testing to qualify either a fabrication process or a new material shall be performed in accordance with the following procedure. Test bellows shall have an inside diameter not less than 89 mm ($3\frac{1}{2}$ in.) and shall have at least three convolutions. The bellows fatigue test data shall be compared with a reference fatigue curve to develop a fabrication factor, Eq. (X1), or material factor, Eq. (X2): **(04)**

$$X_f = R^f_{\text{min.}} \quad \text{(X1)}$$

$$X_m = K_s R^m_{\text{min.}}/X_f \quad \text{(X2)}$$

[1] Consideration shall be given to the detrimental effects of creep-fatigue interaction when the operating metal temperature of the bellows element will be in the creep range. Creep-fatigue interaction may become significant at temperatures above 425°C (800°F) for austenitic stainless steels.

Copyright ASME International
Provided by IHS under license with ASME
No reproduction or networking permitted without license from IHS
Not for Resale

Copyright ASME International
Provided by IHS under license with ASME
No reproduction or networking permitted without license from IHS

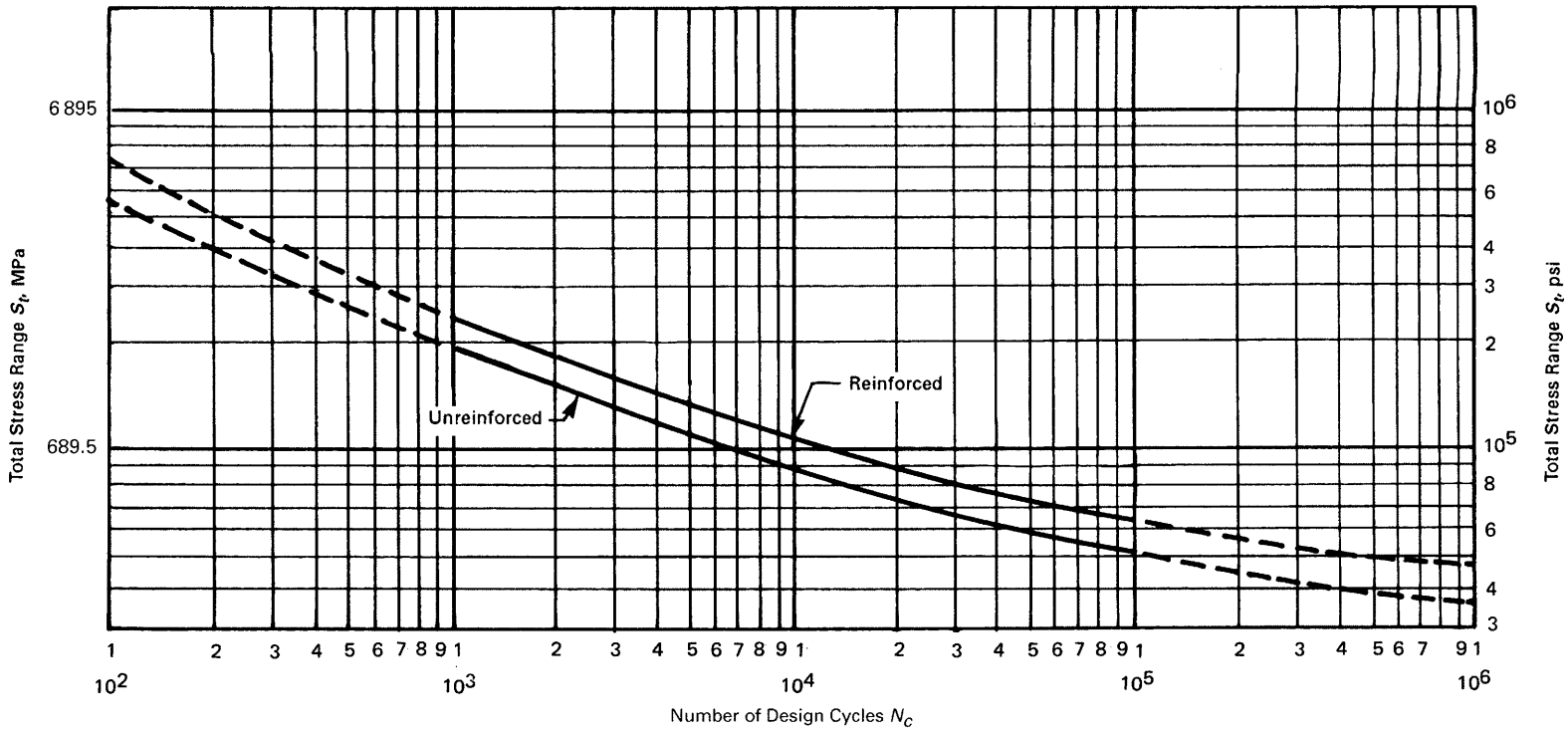

$$N_c = \left(\frac{A}{S_t - B}\right)^2$$

$$S_t = 0.7\ (S_3 + S_4) + S_5 + S_6$$

Bellows	Cycles	A		B	
		MPa	psi	MPa	psi
Unreinforced	≤ 40,000	36 000	5.2 x 10^6	264	38,300
	> 40,000	46 000	6.7 x 10^6	211	30,600
Reinforced	≤ 40,000	45 000	6.6 x 10^6	334	48,500
	> 40,000	59 000	8.5 x 10^6	268	38,800

GENERAL NOTES:

(a) These curves are intended to evaluate the design fatigue life at ambient temperature of austenitic stainless steel bellows which have not been heat treated. They are considered valid primarily in the range of 10^3 cycles to 10^5 cycles, due to the limited data available for the very low and very high cyclic ranges.

(b) The equations are of the form provided in "Design of Pressure Vessels for Low Cycle Fatigue" by B. F. Langer, ASME paper 61-WA-18. The constants were modified to reflect actual bellows test data reduced to a design curve in accordance with the rules of the BPV Code, Section VIII, Division 2, Appendix 6. The calculations of S_5 and S_6 shall be based on a modulus of elasticity equal to 1.95 x 10^5 MPa (28.3 x 10^6 psi).

(c) For nomenclature, refer to EJMA standards.

(d) Factors have been included in these design fatigue curves to account for the normal effects of size, surface finish, and scatter of the data. Therefore, the design cycle life should realistically represent the estimated number of operating cycles. An overly conservative estimate of cycles can result in an increased number of convolutions and a joint more prone to instability.

(04)

Fig. X302.1.3 Design Fatigue Curves for Austenitic Stainless Steel Bellows

Not for Resale

where

K_s = factor (not greater than 1.0) for statistical variation in test results
= $1.25/(1.470 - 0.044N_t)$

N_{ct} = number of cycles to failure in bellows fatigue test; failure is defined as development of a crack through thickness

N_t = number of bellows fatigue tests performed to develop the material factor X_m

$R^f_{\text{min.}}$ and $R^m_{\text{min.}}$ = minimum ratio of test stress range to reference stress range of all bellows tested. (Superscripts f and m refer to qualification of a fabrication process or a new material, respectively.) This ratio shall be determined for each fatigue test by dividing the test stress range (calculated in accordance with the EJMA stress equations) by the reference stress range. The reference stress range is taken from the lower-bound fatigue curve for the bellows fatigue test data used to develop the design fatigue curves, and for unreinforced bellows is:

(SI Units)

$$(58 \times 10^3/\sqrt{N_{ct}}) + 264 \text{ (MPa)}$$

(U.S. Customary Units)

$$(8.4 \times 10^6/\sqrt{N_{ct}}) + 38{,}300 \text{ (psi)}$$

and for reinforced bellows is:

(SI Units)

$$(73 \times 10^3/\sqrt{N_{ct}}) + 334 \text{ (MPa)}$$

(U.S. Customary Units)

$$(10.6 \times 10^6/\sqrt{N_{ct}}) + 48{,}500 \text{ (psi)}$$

X_f = factor (not greater than 1.0) representing effect of the manufacturing process on bellows fatigue strength

X_m = factor representing effect of material and its heat treatment on bellows fatigue strength. X_m for as-formed austenitic stainless steel bellows is 1.0. It shall not exceed 1.0 in other cases unless five or more fatigue tests have been performed on bellows fabricated from the same material.

(d) The manufacturer shall qualify the manufacturing process by correlation fatigue testing. A minimum of five tests (each, for reinforced and unreinforced bellows) of austenitic stainless steel bellows in the as-formed condition, manufactured by the organization making the tests, shall be performed. Testing shall consider the effects of all variables necessary to validate the correlation between the fatigue curves, design equations, and finished product, including, as applicable: bellows diameter, thickness, convolution profile, manufacturing process, and single versus multi-ply construction. The factor X_f shall be determined from the test data in accordance with (c) above.

(e) The allowable stress range S_t for U-shaped bellows, fabricated from material other than as-formed austenitic stainless steel, shall be developed from bellows fatigue test data. A minimum of two bellows fatigue tests, differing in stress range by a factor of at least 2.0, are required to develop a material factor X_m in accordance with (c) above. [The factor X_f in Eq. (X2) shall be for the bellows tested.] Materials used in the as-formed condition and those heat treated after forming are considered separate materials.

X302.1.4 Limitations

(a) Expansion joint bellows shall not be constructed from lap welded pipe or lap welded tubing.

(b) All pressure containing or pressure thrust restraining materials shall conform to the requirements of Chapter III and Appendix A.

X302.2 Expansion Joint Manufacture

Expansion joints shall be produced in accordance with the manufacturer's specification, which shall include at least the following requirements.

X302.2.1 Fabrication

(a) All welds shall be made by qualified welders or welding operators using welding procedures qualified as required by para. 328.2.

(b) The longitudinal seam weld in the bellows element shall be a full penetration butt weld. Prior to forming, the thickness of the weld shall be not less than 1.00 nor more than 1.10 times the thickness of the bellows material.

(c) A full fillet weld may be used as a primary weld to attach a bellows element to an adjoining piping component.

X302.2.2 Examination. The following are minimum quality control requirements.

(a) Required examinations shall be in accordance with paras. 341 and 344.

(b) The longitudinal seam weld in the bellows tube shall be 100% examined prior to forming, either by radiography or, for material thickness ≤ 2.5 mm ($^3/_{32}$ in.) welded in a single pass, by liquid penetrant examination of both inside and outside surfaces. For the purposes **(04)**

Copyright ASME International
Provided by IHS under license with ASME
No reproduction or networking permitted without license from IHS
Not for Resale

of this Appendix, either examination is acceptable for design with a factor E_j of 1.00 when used within the stated thickness limits.

(c) After forming, a liquid penetrant examination shall be conducted on all accessible surfaces of the weld, inside and outside. Welds attaching the bellows to the piping, etc., shall be 100% liquid penetrant examined.

(d) Acceptance criteria for radiography shall be in accordance with Table 341.3.2. Acceptance criteria for liquid penetrant examination shall be that cracks, undercutting, and incomplete penetration are not permitted.

X302.2.3 Leak Test

(a) Each expansion joint shall be shop pressure tested by the manufacturer in accordance with para. 345, except that the test pressure shall be the lesser of that calculated by Eq. (24) (para. 345.4.2) or Eq. (X3), but not less than 1.5 times the design pressure. The test pressure shall be maintained for not less than 10 minutes.

$$P_T = 1.5P_S E_t/E \quad \text{(X3)}$$

where

E = modulus of elasticity at design temperature
E_t = modulus of elasticity at test temperature
P_S = limiting design pressure based on column instability (for convoluted U-shaped bellows, see C-4.2.1 and C-4.2.2 of the EJMA standards)
P_T = minimum test gage pressure

(b) Expansion joints designed to resist the pressure thrust shall not be provided with any additional axial restraint during the leak test. Moment restraint simulating piping rigidity may be applied if necessary.

(c) In addition to examination for leaks and general structural integrity during the pressure test, the expansion joint shall be examined before, during, and after the test to confirm that no unacceptable squirm has occurred. Squirm shall be considered to have occurred if under the internal test pressure an initially symmetrical bellows deforms, resulting in lack of parallelism or uneven spacing of convolutions. Such deformation shall be considered unacceptable when the maximum ratio of bellows pitch under pressure to the pitch before applying pressure exceeds 1.15 for unreinforced bellows or 1.20 for reinforced bellows. Examination for leakage and deformation shall be performed at a pressure not less than two-thirds of the test pressure, after full test pressure has been applied.

(d) Examination for squirm shall be performed at full test pressure. For safety purposes, this may be accomplished by remote viewing (e.g., by optical magnification or video recording) of the changes in convolution spacing with respect to a temporarily mounted dimensional reference. Examination for leakage shall be performed at a pressure not less than two-thirds of test pressure, after application of full test pressure. For a pneumatic test, the precautions of para. 345.5.1 shall be observed.

Copyright ASME International
Provided by IHS under license with ASME
No reproduction or networking permitted without license from IHS
Not for Resale

APPENDIX Z
PREPARATION OF TECHNICAL INQUIRIES

Z300 INTRODUCTION

The ASME B31 Committee, Code for Pressure Piping, will consider written requests for interpretations and revisions of the Code rules, and develop new rules if dictated by technological development. The Committee's activities in this regard are limited strictly to interpretations of the rules or to the consideration of revisions to the present rules on the basis of new data or technology. As a matter of published policy, ASME does not approve, certify, rate, or endorse any item, construction, proprietary device, or activity, and, accordingly, inquiries requiring such consideration will be returned. Moreover, ASME does not act as a consultant on specific engineering problems or on the general application or understanding of the Code rules. If, based on the inquiry information submitted, it is the opinion of the Committee that the inquirer should seek professional assistance, the inquiry will be returned with the recommendation that such assistance be obtained.

An inquiry that does not provide the information needed for the Committee's full understanding will be returned.

The Introduction states that "it is the owner's responsibility to select the Code Section" for a piping installation. An inquiry requesting such a decision will be returned.

Z301 REQUIREMENTS

Inquiries shall be limited strictly to interpretations of the rules or to the consideration of revisions to the present rules on the basis of new data or technology. Inquiries shall meet the following requirements:

(a) Scope. Involve a single rule or closely related rules in the scope of the Code. An inquiry letter concerning unrelated subjects will be returned.

(b) Background. State the purpose of the inquiry, which may be either to obtain an interpretation of Code rules, or to propose consideration of a revision to the present rules. Provide concisely the information needed for the Committee's understanding of the inquiry, being sure to include reference to the applicable Code Section, Edition, Addenda, paragraphs, figures, and tables. If sketches are provided, they shall be limited to the scope of the inquiry.

(c) Inquiry Structure

(1) Proposed Question(s). The inquiry shall be stated in a condensed and precise question format, omitting superfluous background information, and, where appropriate, composed in such a way that "yes" or "no" (perhaps with provisos) would be an acceptable reply. The inquiry statement should be technically and editorially correct.

(2) Proposed Reply(ies). Provide a proposed reply stating what it is believed that the Code requires.

If in the inquirer's opinion, a revision to the Code is needed, recommended wording shall be provided in addition to information justifying the change.

Z302 SUBMITTAL

Inquiries should be submitted in typewritten form; however, legible handwritten inquiries will be considered. They shall include the name and mailing address of the inquirer, and be mailed to the following address:

Secretary
ASME B31 Committee
Three Park Avenue
New York, NY 10016-5990

Copyright ASME International
Provided by IHS under license with ASME
No reproduction or networking permitted without license from IHS
Not for Resale

INDEX[1]

Abbreviations, nonmetals, A326.3 (*see also* symbols)
Acceptance criteria, Tables 302.3.3C and D, 323.3.5, Table 323.3.5, 341.3.2, Table 341.3.2, 341.3.3, 341.4, 341.5, 344.6.2, A328.2.1, A341.3, Table A341.3.2, A341.4.1, K302.3.3, K323.3.5, Table K323.3.5, K341.3, Table K341.3.2
Acidic materials, effects of, F323.4
Adhesive joints (*see also* solvent cemented)
  definition (*see* bonded joint)
  in metallic piping, M318.2, K318.2
  in nonmetallic piping, A328.5.6, MA311.2
Air condensation, 301.11
Alignment, 328.4.2, 328.4.3, Fig. 328.4.3, 335.1.1, 341.4.1, 341.4.3, M335.1.1, K328.4.3
Allowable pressures, nonmetals, Tables B-4 and B-5
Allowable stress
  definition, 300.2
  values, Table K-1
Allowable stress amplitude, K302.3.1, K304.8.3
Allowable stress bases, 302.3, A302.3, M302.3, K302.3
  metallic materials, 302.3.2, M302.3.2, K302.3.2
  nonmetallic materials, A302.3.2
Allowable stress range, 302.3.5, 319.1, 319.3.4, K302.3.5, K319.1
Allowable stress values for
  bolting, Table A-2
  clad metals, linings, 323.4.3, K323.4.3
  metals, Tables A-1 and K-1
  supports, 321.1.3
  testing, 302.3.6, 345.2.1, A302.3.4, K302.3.6
  thermoplastics, Table B-1
Allowances
  corrosion, erosion, 302.4, 304.1.1, A304.1.1, M302.4, MA302.4, K302.4, K304.1.1
  for pressure-temperature variations, 302.2.4, A302.2.4, M302.2.4, K302.2.4, App. V
  grooving, threading, 302.4, K302.4
  mechanical strength, 302.4.1
Alternating stress, K304.8.2, K304.8.3
Alternative leak test, 345.1, 345.9, K345.1
Aluminum and aluminum alloys
  allowable stresses, 319.3.4, Tables A-1 and A-2
  effects, F323.4
  flanges, specification, App. L
  fluid service requirements, 323.4.2
  precautions, F323.4
  quality factors, Tables A-1A and A-1B
  welding, 323.4.2, Notes for App. A
Ambient effects, 301.4, F301.4
Analysis
  fatigue (*see* fatigue analysis)
  flexibility, 319.4, 321.1.2, A319.4, M319.4, K319
  product, K323.1.5
  properties for, 319.3, A319.3
  support, 321.1.2, K321
Anchors, 319.7, 321.2.1, A319.7
Antimony, effects of, F323.4
A-Numbers, Tables 330.1.1 and 331.1.1
Appendices (*see* Contents)
  status of, 300(f), 300.4
Application of Code, Introduction
Assembly, 300.2, 335, A335, M335, K335
Atmospheric icing, 301.4.3
Attachments, 321.1.4, 321.3, K321 (*see also* supports)

Backing filler material (*see* consumable insert)
Backing material, 300.2, 328.3.2, 328.4.2, M311.2, M328.3.2, K311.2.3, K328.3.2, K328.4.2
Base material, def., 300.2
Bases for allowable stresses (*see* allowable stress bases)
Basic allowable stress
  definition, 300.2
  values, Table A-1
Bearing
  allowable stress, 302.3.1, K302.3.1
  test, A302.3.3
Bell type joints (*see also* caulked joints a*nd* packed joints)
  assembly, 335.5, A335.5
  fluid service requirements, 316, 318.1, A318, M318
Bellows expansion joints, 345.3.3, 345.4.2, F304.7.4, K304.7.4, App. X
Bending, 332.2, A332.2, M332, MA332, K332.2
Bending moments, 319.4.4
Bending temperature, 332.2.2
Bends
  corrugated, 306.2.2, 332.2.3, A306.2.2, M332, K306.2.3, K332.2.2, App. D
  fabrication, 332.2, A332.2, K332.2
  flattening, 332.2.1, K332.2.1
  fluid service requirements, 306.2, A306.2, M306.2, K306.2
  miter, 300.2, 304.2.3, 306.3, A304.2.3, A306.3, M306.3, MA306.3, K304.2.3, K306.3
  pipe, 304.2.1, 306.2, 332.2, A304.2.1, A306.2, M306.2, M332, MA306.2, K304.2.1, K306.2, K332.2
  pressure design, 304.2.1, 304.2.4, A304.2.1, K304.2.1
Bimetallic piping, 301.7.3, 323.4.3, K323.4.3

[1] General Notes follow at end of this Index.

Copyright ASME International
Provided by IHS under license with ASME
No reproduction or networking permitted without license from IHS
Not for Resale

Bismuth, effects of, F323.4
Blanks, 304.5.3, 308.1, M308.5, K308.5
Blind flanges, 304.5.2, A304.5.2, K304.5.2
Boiler piping, 300.1.3, Fig. 300.1.1
Bolt design stress basis, 302.3.2, M302.3, K302.3.2
Bolt design stress values, Table A-2
Bolted joints
  assembly, 335.2, A335.2, K335.2
  design, 304.5.1, 308.4, 309.2, 312, K302.3, K309, F309, F312
  fluid service requirements, 309, 312, A312, K304.5, K309, K312
Bolting, bolts, 309, Table 326.1, K309, Tables K323.3.1 and K326.1, F309.1
  procedure, 309.2.3, F309, F312
  sequence, 309.2.3, A335.2.5
  torque, 309.2.3, 312.1, 312.2, 335.2.2, A335.2.4, A335.8.1
Bond, seal, 335.3.2, A311.2.4, A328.6
Bonded joints
  acceptance criteria, Table A341.3.2
  definition, 300.2
  fabrication, A328
  fluid service requirements, A311, MA311.2
  materials, A328.2.1, A328.3.1, A328.5.3, A328.5.6, A328.7
  procedures, A328.1, A328.2, A328.5
  qualification, A328.2
  records, A328.2.4
  repair of defects, A328.6, A341.3.3
  requalification, A328.2.6
  responsibility, A328.1
Bonder, def., 300.2
Borosilicate glass, 323.4.2, A334.1, A335.8.1, Table B-5, FA323.4
Bowing (of piping), 301.7.2, F301.7
Brackets, support, 321.3.2
Branch connection fittings
  definition, 300.2
  application, 304.3.1, K304.3.1
  limitations, 304.3.2, 304.3.3, 328.5.4, K306.1.2, K328.5.4
Branch connections (*see also* branch connection fitting, extruded outlets)
  acceptance criteria, Tables 341.3.2 and K341.3.2
  considerations, 304.3.5, A304.3.3
  design, 304.2.4, 304.3, A304.3, K304.3
  fabrication, 328.4.3, Fig. 328.4.4, 328.5.4, Fig. 328.5.4, A328.5.2, A328.5.3, A328.5.4, A328.5.5, Fig. A328.5.5, A328.5.6, A328.5.7, K328.5.4, Fig. K328.5.4
  fluid service requirements, 306.5, A306.5, M306.5, MA306.5, K306.5
  reinforcement, 304.3.3, 304.3.4, 328.5.4, Fig. 328.5.4, 331.1.3, A328.5.3, A328.5.6, K328.5.4, App. H
  small, 302.4.1, 304.3.5, 322.3.2
  strength, 304.3.2, A304.3.2, M304.3.2, K304.3.2
  welded, 304.3.3, 328.5.4, Fig. 328.5.4, K328.5.4, Fig. K328.5.4, App. H
Branches (*see* branch connection fittings; branch connections; *and* extruded outlets)
Brazed joints
  fabrication, 333, M333, K333
  limitations, 317.2, M317, K317.2
  materials, 325, 333.2
Braze welding, 300.2, 317.2, 333, M317, M333, K317.2
Brazing, 300.2, 317.2, 333, M317, M333, K317.2, K333
Brittle piping (*see also* ductility)
  assembly, A335.8
  supports, A321.5.2
Butt-and-wrapped joint
  definition (*see* bonded joint)
  bonding, A328.5.7
Butt joint, def., 300.2
Butt weld
  acceptance criteria, 341.3.2, Table 341.3.2, Fig. 341.3.2, 341.3.3, K341.3.2, Table K341.3.2
  fluid service requirements, 311.2, A318.3.1, M311, K311.2
  girth, 311, 328.5, M311, M328, K311, K328.5
  longitudinal, 302.3.4, 328.4.3, 328.5, K302.3.4, K328.4.3, K328.5
  preparation, 328.4, Fig. 328.4.2, K328.4, Fig. K 328.4.2
  repair, 328.6, K328.6
  requirements, 328, A329.1, K328
  standard for, Table 326.1

Cadmium, effect, F323.4
Calculated stress limits, 302.3.5, 302.3.6, A302.3.5, A302.3.6, K302.3.5, K302.3.6
Calculations, branch reinf., App. H
Carbon steel (*see* steel, other than stainless)
Casting quality factor E_c, 302.3.3, Tables 302.3.3C and 302.3.3D, K302.3.3, Table A-1A
Cast iron
  allowable stresses, 302.3.2, Table A-1
  flanges, bolting for, 309.2.3
  fluid service requirements, 323.4.2, M323.4.2, K323.4.2, F323.4
  quality factor E_c, Table A-1A
  standards, Table 326.1
  supports, 321.1.4
Categories, fluid service, 300(b), 300.2, App. M
Category D Fluid Service
  definition, 300.2, App. M
  requirements for, 300(d), 305.2.1, 305.2.2, 306.3.2, 307.2, 311.2.1, 314.1, 314.2.1, 316, 317.1, Table 341.3.2, 341.4.2, 345.1, 345.7, A311.2.3, A323.4.2, A341.4.2, A345.7
Category M Fluid Service
  definition, 300.2, App. M

Copyright ASME International
Provided by IHS under license with ASME
No reproduction or networking permitted without license from IHS
Not for Resale

piping for, 300(d), Ch. VIII, K300.1.4
Caulked joints, 300.2, 316, 335.5, A335.5, M316, M335.5, K316 (*see also* bell type joints *and* packed joints)
Cautions, Introduction (*see also* precautions)
Cemented joints (*see* adhesive joints; solvent cemented joints)
Cements, 325, A328.2.1, A328.3.1, A328.5.3, F323.1
Charpy impact test, 323.3, K323.3
Chemical plant, def., 300.2
Chemicals piping coverage, 300.1.1
Clad materials, 323.4.3, K323.4.3
Clamps, support, 321.2.2, 321.3.1
Classifying fluid services, App. M
Cleaning, 328.4.1, A328.4, F335.9
Clips, support, 321.3.2
Closures, 304.4, A304.4, M304.4, K304.4
Code
application, Introduction
cases, Introduction
coverage, 300.1.1, Fig. 300.1.1
description, 300(a)
exclusions, 300.1.3
inquiries, Introduction, App. Z
intent of, Introduction, 300(c)
interpretation, Introduction, App. Z
scope, 300.1
service requirements, 300(d)
Coefficient of expansion (*see* thermal expansion)
Cold spring, 319.2.4, 335.1.1, 341.4.3, A319.2.3
Combined leak test, 345.6
Components
criteria for design, 302.2, A302.2, K302.2
definition, 300.2
dimensions (standards), 326, A326, M326, K326
fluid service requirements, 300(d), Ch. II, Part 3, A306, A308, M305–M308, MA306, MA308, K306–K309
listed, 302.2.1, 302.2.2, 304.7.1, 305.1, 306.1.1, 307.1.1, 308.1.1, 309.1.1, 326.1.1, 326.2.1, Table 326.1, A302.2.2, A304.7.1, A306.1.1, M326.1.1, Table A326.1, K302.2.1, K302.2.2, K304.7.1, K306.1.1, K307.1.1, K326, Table K326.1, App. E
metallic-nonmetallic, 304.7.3, A304.7.3
pressure design, 304, A304, M304, K304
ratings (standards), 326, A326, M326, K326
standards, 326, A326, M326
tabular listing, Tables 326.1, A326.1, and K326.1
unlisted, 302.2.3, 304.7.2, 326.1.2, 326.2.2, A304.7.2, M326.1.2, K302.2.3, K304.7.2
Compounds
sealing, 325, M325
thread, 314.1, 325, 335.3.1, 335.3.2
Compression joints, tubing, 315, 335.4.2, M335.4.2, K315
Computed stress range, 319.1, 319.4.4
Concentric reducers, 304.6, A304.6, K304.6
Concrete pipe, Table B-4
Condensation, air, 301.11
atmospheric (moisture), 301.4.3
Conditions, design (*see* design conditions)
Connections
branch (*see* branch connection fittings; *and* branch connections)
hose, Table 326.1
instrument, 322.3.2, K322.3.2
structural (support), 321.4
Connections for piping, 300.1.3, 300.2
Constant-support hangers, 321.2.3
Consumable inserts, 300.2, 311.2.3, 328.3.3, 328.4.2, M328.3.2, K311.2.3, K328.4.2 (*see also* backing material)
Continuity
electrical, A335.2.5
of lining, A329.1.2
Contraction, thermal (*see* expansion)
Control piping, 322.3, A322.3, M322.3, K322.3
Cooling of fluid, effects, 301.4.1
Copper and copper alloys, 319.3.4, Tables A-1, A-1A, A-1B, and A-2
effects, F323.4
Corrosion
allowance, 302.4, 304.1.1, A304.1.1, K304.1.1
in service, 323.5
Counterweight supports, 321.2.4
Coupling, straight thread, 314.2.1
Criteria, acceptance (*see* acceptance criteria)
Criteria, design (*see* design criteria)
Criteria, impact test, 323.3.5, K323.3.5
Cross-country pipelines, 300.1.3, Fig. 300.1.1
Crushing (*see* bearing test)
Curved pipe (*see also* bends, elbows)
external pressure, 304.2.4, K304.2.4
Cyanides, effects of, F323.4
Cyclic effects (loads), 301.10
Cyclic service, 302.3.5, K302.3.5, K304.8.1 (*see also* severe cyclic conditions)

Damaging to human tissue, def., 300.2
Dead load, 301.6.2, 304.3.5, 321.1
Defects, Table 302.3.3C, 328.6, 341.3.3, 341.3.4, A328.7, A334.2, A341.3.3, K323.1.4, K328.6, K341.3.3
Definitions (alphabetically listed), 300.2
nomenclature, App. J
Deformation, stress limits, 302.3.2
Delayed heat treatment, 331.2.4
Design
allowances, 302.2.4, 302.4, A302.2.4, A302.4, M302.2.4, K302.2.4, K302.4, App. V
conditions, 301, A301, M301, K301, F301
criteria, 302, A302, M302, MA302, K302

Copyright ASME International
Provided by IHS under license with ASME
No reproduction or networking permitted without license from IHS
Not for Resale

minimum temperature, 301.3.1, 323.2.2, A301.3.1, M323.2, K323.2.2
of (specific) systems, 322, A322, M322, K322
philosophy, Introduction, 300(c)
pressure, 301.2, 322.6.3, M301.2
requirements , 300(c), 300.1.1 (*see also* designer responsibilities; engineering design; *and other specific terms*)
supports, 321, A321, K321
stresses, bolting, 302.3.2, M302.3, K302.3.2
stress values, Table A-2
stresses, metals (*see* stresses, allowable)
stresses, nonmetals, A302.3, App. B
temperature, 301.3, A301.3, M301.3, K301
Designer
approval by definition, 331.2.1, M323.1.4
definition, 300.2
responsibilities, 300(b), 300(c), 302.2.3, 319.5, 323.2.1, 323.2.4, 331.2.1, 331.2.2, 345.5.1, A302.1, M323.1.4, K300(b), K302.2.3
Deterioration in service, 323.5, M323.5
Device, pressure relieving, 301.2.2, 322.6, K322.6.3
Differential thermal expansion, 301.7.3, 313
Dimensional standards, 326, A326, M326
tables, Tables 326.1, A326.1, and K326.1
Discharge piping, 301.5.5, 322.6.2, G300.2
Discontinuities, 344.6, K302.3.3, Table K302.3.3D (*see also* acceptance criteria, indications)
Displacement
strains, 319.2.1, 319.2.3, 321.1, A319.2.1
stresses, 319.2.2, A319.2.2
stress range, 302.3.5, 319.2.3, 319.4.4, K302.3.5
Dissimilar metals, 330.2.3, 331.2.3
Ductile Iron
allowable stresses, Table A-1
fluid service requirements, 323.4.2, M323.4.2, K323.4.2
quality factor, E_c, Table A-1A
standards, Table 326.1
supports, 321.1.4
Ductility
reduced, 301.9
requirements (*see* toughness requirements)
Dynamic effects (loads), 301.5, M301.5, F301.5

Earthquake loads, 301.5.3, 302.3.6, A302.3.4, K302.3.6
Eccentric reducer, 304.6.2, A304.6, K304.6
Eddy current examination, Table K305.1.2, K344.8
Elastic modulus, 319.3.2, 319.4.4, 319.5.1, A319.3.2, App. C, App. D
Elastomeric seals, A318.4, A335.6.3
Elbows, 304.2.2, 319.4.4, A304.2.2, K304.2.2 (*see also* fittings)
Electrical continuity, A335.2.6
Electrofusion, A328.5.5
Elements, piping, def., 300.2
Elongated indications, Tables 341.3.2, K341.3.2
End preparation (*see* welding preparation)
Engineered safeguards, M300(d), App. G
Engineering design, 300(b), 300(c), M300(e), K321
definition, 300.2
Engineering requirements, 300(c)
Equipment connections (*see* connections for piping)
Equipment excluded, 300.1.3, Fig. 300.1.1
Equipment, packaged, 300.1.2, 300.2
Erection, 300.2, 335, A335, M335
Erector responsibilities, 300(b), 341.2
Erosion allowances, 302.4
Examination
definition, 341.1
personnel, 342
procedures, 343
Examination methods, 344
eddy current, Table K305.1.2, K344.8
in-process, 341.4.1, 341.4.3, 344.7, M341.4.1, K341.4.1
liquid penetrant, Table 302.3.3C, 341.4.3, 344.4, 345.9.1, K302.3.3, K344.4
magnetic particle, Table 302.3.3C, 341.4.3, 344.3, 345.9.1, K302.3.3, K344.3
qualification, 342.1, 343
radiographic, Tables 302.3.3C and 302.3.4, 341.4.1, 341.4.3, 341.5.1, 344.5, 345.9.1, K302.3.3, Table K302.3.3D, K341.3.2, K341.4.1, K344.5
supplementary, 341.5
ultrasonic, Table 302.3.3C, 341.4.1, 341.4.3, 344.6, K302.3.3, K341.3.2, K341.4.1, K344.6
visual, 302.3.3, 341.4, 344.2, 344.7.2, 345.2.2, K341.4.1
Examination, progressive (*see* progressive examination)
Examination required, 302.3.3, 302.3.4, 323.4.3, 341.3, Table 341.3.2, 341.4, 345.2.2, M341.4, K302.3.3, K302.3.4, K323.4.3, K341.3, K341.4
alternative leak test, 345.1, 345.9.1, K345.9
branch connection, 341.3.1
castings, 302.3.3, Tables 302.3.3C and 302.3.3D, K302.3.3, Table K302.3.3D
Category D Fluid Service, Table 341.3.2, 341.4.2, A341.4.2
Category M Fluid Service, M341.4
clad or lined pipe, 323.4.3, K323.4.3
High Pressure Fluid Service, Table K341.3.2, K341.4
longitudinal welds, 302.3.4, Table 302.3.4, Table 341.3.2, 341.4.1, 341.5.1, K302.3.4, Table K341.3.2
Normal Fluid Service, Table 341.3.2, 341.4.1
pneumatic test, 341.4.1, 345.2.2, 345.5
progressive, 341.3.4, 341.5.1
severe cyclic conditions, Table 341.3.2, 341.4.3
visual (*see* visual examination)
Examination requirements, 341.3, A341.3, K341.3 (*see also* examination required)
Examiner qualifications, 342.1
Excluded piping, 300.1.3, Fig. 300.1.1

--`,,```,,,,````-`-`,,`,,`,`,,`---
Copyright ASME International
Provided by IHS under license with ASME
No reproduction or networking permitted without license from IHS
Not for Resale

Excursion, definition, V300.1
Expanded joints, 313, M313, MA313, K313
Expansion, thermal
  data, 319.3.1, A319.3.1, App. C
  design for, 301.7, 304.3.5, 319, A319
  differences, 301.7.3
  effects, 301.7, 304.7.2, 313, 315.1, A304.7.2, K304.7.2, F301.7
  fluid, 301.4.2
  piping, 301.7, 319, A319, M319
Expansion joints, 304.7.4, 319.7, 321.2.1, 345.3.3, A319.7, F304.7.4
  bellows type, 345.3.3, 345.4.2, K304.7.2, K304.7.4, App. X
Experimental stress analysis, 304.7.2
Extended fatigue life, K304.8.6
External pressure
  design, 302.3.5, 304.1.3, 304.2.4, 304.3.3(b), A302.3.3, A304.1.3, A304.3.2, K302.3.5, K304.1.3, K304.2.4
  test, 345.2.4, 345.2.5
Extruded outlets, 304.3.1, 304.3.4, Fig. 304.3.4, K304.3.1

Fabricated branches
  fluid service requirements, 306.5, A306.5, K306.5
  pressure design, 304.3, A304.3, M304.3, K304.3
Fabricated laps, 306.4.1, 306.4.3, 328.5.5, A306.4, M306.4, K306.4, K328.5.5
Fabrication, 300.2, 323.4.3, 327–333, A328–A334, M328–M333, K323.4.3, K328–K333
Fabricator responsibilities, 300(b), Table 323.2.2, 327–333, 341, A328–A334, A341, M328–M333, M341, K328–K333, K341
Facing, flange (*see* flange facing)
Factor of safety, X302.1.1
Factors
  casting E_c (*see* references in App. J)
  flexibility h, 319.3.6, App. D
  stress intensification i, 319.3.6, 319.4.4, App. D
  stress range reduction f, 302.3.5
  weld joint E_j (*see* references in App. J)
Fatigue, 301.10, 319.1.1, K302.3.1, K304.7.2, K304.8, 323.1.4, X301.1.2, Fig. X302.1.3
Fatigue analysis, K304.8, K319, X302.1.3
Fatigue life, K304.7.2, K323.1.4
  extended, K304.8.6
Filler material, 300.2, Table 323.3.1, 328.3.1, 333.2.1, A328.3.1, Table K323.3.1, K328.3.1
Fillet weld, 300.2, 311.2.5, 328.5.2, Figs. 328.5.2, 328.5.4, and 328.5.5, 331.1.3, Table 341.3.2, K311.2.5, K328.5.2, Tables K341.3.2 and D300, App. H
Fire protection piping, 300.1.3
Fired heater (*see* heater piping)
Fittings (*see also* branch connection fittings)
  definition (*see* components)
  fluid service requirements, 306, A306, M306, MA306, K306
Fixtures, support, 321.2
  definition (*see* pipe-supporting elements)
Flammable, def., 300.2 (*see also* hazardous)
Flange facing, 308.3, A308.2.1, K308.4, F308.4
Flanged joints (*see also* bolted joints)
  assembly, 302.3.2, 312, 335.2, A335.2, K312, K335.2, F312
  bolting (*see* bolting, bolts)
  fluid service requirements, 312, A312, K312
  gaskets (*see* gaskets)
Flanges
  aluminum, specification, App. L
  blind, 304.5.2, A304.5.2, K304.5.2
  expanded joint, 308.2.2, M308.2, K308.2.2
  facing, 308.3, A308.2.1, M308.2, K308.4, F308.4
  flat-faced, 309.2.3, 312.2, F308.4 (*see also* full-face gaskets)
  fluid service requirements, 308, A308.2, M308, MA308.2, K308
  for severe cyclic conditions, 308.2.4
  pressure design, 304.5, A304.5, A312, K304.5, F312
  slip-on, 308.2.1, 311.2.5, 328.5.2, Fig. 328.5.2, Table 308.2.1, Table 341.3.2, M308.2, K308.2, F308.2
  tapped holes, 309.3, A309.3
  threaded, 308.2.3, M308.2, K308.2.1
  welding neck, 308.2.4
Flared laps, 306.4.2, 306.4.3, 308.2.5, 332.1, 323.3, A306.4.2, M306.4, K306.4, K308.2.2
Flared tube joints, 315, 335.4.1, A335.4.1, M335.4.1, K315
Flareless tube joints, 315, 335.4.2, M335.4.2, K315
Flashing of fluids, 301.5.1, F301.5
Flexibility, 319, A319, M319, K319
  analysis, 319.4, 321.1.2, 345.9.2, A319.4, M319.4, K319
  characteristic h, Table D300
  factor k, 319.3.6, Table D300
  increased, 319.7, A319.7
  stresses, 319.4.4
Flexible joints, 319.7, A319.7
Fluids
  cooling of, effects, 301.4.1
  flashing, 301.5.1, F301.5
  geysering, 301.5.1, F301.5
  instability, 300(c), F323(a)
  reactivity, F323(a)
  slugging, 301.5.1
  thermal expansion of, 301.2.2, 301.4.2
  two-phase flow of, 301.5.1, 301.7.2, F301.7
Fluid service
  categories, 300(d), 300.2, App. M
  definitions, 300.2
  guide to classifying, App. M
  precautions, materials, F323, FA323.4
  requirements, 305–318, 323.4, A305–A318, A323.4, M305–M318, M323.4, MA305–MA318, MA323.4, K305–K318, K323.4

Copyright ASME International
Provided by IHS under license with ASME
No reproduction or networking permitted without license from IHS
Not for Resale

Fluidized solids coverage, 300.1.1
Forged fittings, 306.1, M306.1, K306.1
Forged laps, 306.1, 306.4, M306.1, K306.1, K306.4
Forming, 332.1, 332.3, K332.3
Full-face gaskets, 304.5.1, 309.2.3, 312.2, A304.5.1, F308.4

Gallium, effects, F323.4
Gas piping coverage
  in-plant, 300.1.1
  transmission lines, 300.1.3, Fig. 300.1.1
Gaskets, 308.1, 308.4, 325, 335.2.4, A308.4, K308.1, K308.4, F308.4, F312
  full-face (*see* full-face gaskets)
Geysering of fluids, 301.5.1, F301.5
Girth weld
  fluid service requirements, 311, M311, K311
  imperfections, 341.3.2, Fig. 341.3.2, Table 341.3.2, K341.3.2, Table K341.3.2
Gland type joint, 318, 335.6, M318, K318
Glass, borosilicate, A321.5.3, A323.4.2, A334.1, A335.8.1
Governmental jurisdiction, Introduction
Gradients, temperature, 301.7.2, F301.7
Grooving allowance, 302.4, K302.4
Guide to classifying fluid services, App. M
Guides (support), 321.2.1

Hand lay-up (*see* butt-and-wrapped)
Hangers, pipe (*see* supports)
Hardness
  air hardening, 331.1.3, K331.1.3
  requirements, 331.1.7, Table 331.1.1, K331.1.3
  testing, 331.1.7, 341.5.2
Hazard (to personnel), App. G
Hazardous properties of fluids [*see* 300(c), Category D, Category M, damaging to human tissue, flammable, fluid service, instability of fluids; *see* G301.1; *see also* fluid service requirements for specific piping elements]
Header, 304.3.4, 319.4.4, App. H (*see also* run)
  extruded outlet, 304.3.4
Heat-affected zone, 300.2, Tables 323.2.2 and 323.3.1, 331.1.7, Table K323.3.1
Heater piping, 300.1.3, Fig. 300.1.1
Heat fusion joint, A328.5.4
Heat treatment, 300.2, Tables 323.2.2 and 323.3.1, 323.3.5, 328.2.1, 331, Table 331.1.1, M331, K331
  for bending and forming, 332.4, K332.4
  for welding-end valves, 328.5.1
  local (*see* local heat treatment)
High pressure piping, 300(e), Ch. IX
  scope and applicability, K300
High silicon iron, 323.4.2, F323.4
Holes, tapped, 309.3, A309.3
Hose connection (standard), Table 326.1
Hot gas welded joint, A328.5.2
Hydraulic
  impact (shock) (*see* shock, hydraulic)
  support, 321.2.5
Hydrogen, effects, F323.4
Hydrostatic design stress
  definition, A302.3
  values, Table B-1
Hydrostatic leak test, 345.1, 345.4, A345.4, K345.1, K345.4
Hydrostatic-pneumatic leak test, 345.6, K345.6

Ice loads, 301.6.1, 321.1
Icing, atmospheric, 301.4.3
Identification, bond, weld, 328.5.1, A328.5.1
Impact (*see also* toughness)
  acceptance criteria, 323.3.5, Table 323.3.5, K323.3.5, Table K323.3.5
  forces or loads, 301.5.1, 315.1, 321.1, A302.1, A304.7.2, A323.4.1, M301.5.1, K304.7.2
  hydraulic, 301.5.1
  testing, metals, Table 323.2.2, 323.3, Table 323.3.1, K323.3, Table K323.3.1
Imperfections, 341.3.3, Fig. 341.3.2, K341.3.3 (*see also* acceptance criteria, indications)
  illustrations, Figs. 328.4.3, 328.4.4, and 341.3.2
Increasing flexibility, 319.7, A319.7
Indications, 300.2, Tables 341.3.2 and K341.3.2
Initial service leak test, 345.7, M345, K345.1
In-process examination, 341.4.1, 341.4.3, 344.7, M341.4, K341.4.2
Inquiries, Introduction, App. Z
Inserts, consumable, 300.2, 311.2.3, 328.2.1, 328.3.3, Fig. 328.3.2, 328.4.2, M328.3.2, K311.2.1, K328.4.2
Inspection, 300.2, 340
Inspector
  approval by, 304.7.2, 328.2.2, 328.2.3, 341.4.1, 341.4.3, A328.2.2, A328.2.3, M341.4.1
  certification by, 341.4.1, 345.2.7
  definition, 340.4
  qualifications, 340.4
  responsibilities, 300(b), 328.2.2, 328.2.3, 340.2
  rights, 340.3
Instability of fluids, 300(c), F323(a)
Instrument piping, 322.3, A322.3, M322.3, K322.3
  components, def., 300.2
Insulated piping, 301.3.3, 301.3.4
Insulation loads, 301.6.2
Intensification factors, 319.3.6, 319.4.4, App. D
Intent of Code, Introduction, 300(c)
Intermediate alloy steel (*see* steel, other than stainless)
Internal insulation, 301.3.4
Internal pressure
  design, 302.3.5, 303, 304, A304, M304, MA304, K302.3.5, K303, K304

Copyright ASME International
Provided by IHS under license with ASME
No reproduction or networking permitted without license from IHS
Not for Resale

leak test, 345.2.1, 345.4, 345.5, 345.6, 345.7, A345.2.1, A345.4.2, K345.2.1, K345.4.2
Interpretation of Code, Introduction, App. Z
Interrupted welding, 330.2.4

Jacketed piping, 301.7.3, 345.2.5
leak test, 345.2.5
Joining
materials, 325, 328.3, Table A326.1, A328.3.1, A328.5.1, A328.5.3, A328.5.5, A328.5.6, K328.3
metals, 327, 328, 333, 335, A329, A335, M335, K328, K333
nonmetallic lined materials, A329, A335.2.5
nonmetals, A328, A334, A335
nonplastic nonmetals, A334
Joint (*see also* specific types of joint)
alignment, 328.4.2, 328.4.3, 335.1.1, M335.1.1
assembly, 335, A335, M335
design, def. (welded), 300.2
fit-up, A328.4
fluid service requirements, 300(d), 310–318, A310–A318, M310–M318, MA310–MA318, K310–K318
penetration, 328.5.4, 328.5.6, 341.3.2, Fig. 341.3.2, Table 341.3.2, K341.3.2, Table K341.3.2
preparation, 328.4, A328.4, A328.5.2, A328.5.3, A328.5.4, K328.4
Junction of services, 302.2.5, A302.2.5, M302.2.5, K302.2.5
Jurisdiction (*see* governmental)

Laid-up (*see* butt-and-wrapped)
Laps (*see* fabricated; flared; *or* forged laps)
for severe cyclic conditions, 306.4, 306.4.3
Larson-Miller parameter, App. V
Lateral (fitting), 304.3.1
Lead
effects, F323.4
fluid service requirements, 323.4.2
Leak test, 345, A345, M345, K345, X302.2.3
Life Fraction Rule, App. V
Limitations on
imperfections (*see* acceptance criteria)
temperature (*see* temperature limits)
Limits, temperature (*see* temperature limits)
Lined piping, 301.7.3, 323.4.3, A300(a), A300(d), A308.4.1, A312, A318.3, A323.4.3, A329, A335.2.6, M323.4.3, MA323.4.3, K323.4.3
Liquefied gases coverage, 300.1.1
Liquid penetrant examination, Tables 302.3.3C and 341.3.2, 341.4.3, 344.4, 345.9.1, K302.3.3, K344.4, X302.2.2
Liquid piping coverage, 300.1.1, 300.1.3
Listed
components (*see* components listed)
definition, 300.2
joints, 315.2, 318.1.1
materials, 323.1.1, M321
specifications, 323.1.1, Apps. A, B, E, and K
standards, 326.1.1, A326.1, K326.1, App. E
standards, tables, Tables 326.1, A326.1, and K326.1
Live load, 301.6.1, 304.3.5, 321.1
Loads (*see* specific type of load)
Local heat treatment, 331.2.6
Longitudinal
joints, 302.3.4, 328.4.3, Table 341.3.2, K302.3.4, K328.4.3, Table K341.3.2
stresses, 302.2.4, 302.3.5, K302.3.5
Low alloy steel (*see* steel, other than stainless)
Low temperature requirements, 323.2.2, Table 323.2.2, A323.2.2, Table A323.2.2, K323.2.2
Lubricant, thread, 325, 335.3.1, A314.2.1

Magnesium, effects, F323.4
Magnetic particle examination, Tables 302.3.3C and 341.3.2, 341.4.3, 344.3, 345.9.1, K302.3.3, K344.3
Malfunctions, 301.2.1, 301.4.3, 302.2.4
Malleable iron
allowable stresses, 302.3.2, Table A-1
fluid service requirements, 323.4.2, M323.4.2, K323.4.2, F323.4
quality factors E_c, Table A-1A
standards, Table 326.1
supports, 321.1.4
Manufacturer responsibilities, 300(b), 304.3.4, Table 323.3.1, 341.2
Materials, 323, 325, A323, M323, MA323, K323
bonding, A328
clad, 323.4.3, K323.4.3
deterioration in service, 323.5
fluid service requirements, 300(d), 323.4, A323.4, M323.4, MA323.4, K323.4
listed, 323.1.1
metallic lining, 323.4.3, K323.4.3
miscellaneous, 325
nonmetallic lining, A323.4.3
precautions, F323, FA323.4
properties for flexibility analysis, 319.3, A319.3, App. C
reclaimed, 323.1.4, A323.1.4, M323.1.4, K323.1.4
supports, 321.1.4, M321
temperature limitations, 323.2, A323.2, Tables A323.4.2C and A323.4.3, M323.2, K323.2
unknown, 321.1.4, 323.1.3, M321.1.3, K323.1.3
unlisted, 323.1.2
welding, 328, A329.1, K328
Maximum relieving pressure, 322.6.3
Mechanical joints, 300.2, 318, M318, K318
Mechanical loads, 313, 314.2.1, 314.2.2, 319.1, 321.1.1, A323.4.1, K314.1
Mechanical strength allowance, 320.4.1
Metallic bellows expansion joints, 345.3.3, 345.4.2, F304.7.4, App. X

Copyright ASME International
Provided by IHS under license with ASME
No reproduction or networking permitted without license from IHS
Not for Resale

Metallic-nonmetallic piping, 301.7.3, 304.7.3, A304.7.3
Misalignment (*see* alignment)
Misecellaneous materials, 325
Miter, def., 300.2
Miter bend
  flexibility analysis, 319.4.4
  fluid service requirements, 306.3, A306.3, M306.3, MA306.3, K306.3
  pressure design, 304.2.3, A304.2.3
Modulus of elasticity, 319.3.2, 319.5.1, A319.3.2, App. C, App. D
Moments in piping, 319.4.4
Movements
  of connected equipment, 301.8, 319.2.1
  of piping, 304.3.5, 319.6, A319.6
  of supports, 301.8, 304.3.5, 319.2.1
Multiple branches, 304.3.3, 304.4.3
Multiple outlet closures, 304.4.2

Natural gas piping, 300.1.1, 300.1.3
Nickel and nickel alloys, Tables A-1, A-1A, A-1B, and A-2, F323.4
Nomenclature and symbols, 300.3, App. J
Nominal, 300.2
Nominal pipe size (NPS), 300.2, App. J
Nonmetallic lined piping, 300(d), Ch. VII, MA300, MA323.4.3
Nonmetallic lining material, A323.4.3
Nonmetallic-metallic piping, 301.7.3, 304.7.3, A304.7.3
Nonmetals, 300(d), Ch. VII, MA300–MA346, App. B, Tables C-5 and C-8
Nonplastic nonmetals,
  fluid service requirements, A323.4.2
  joining, A334
  repair of defects, A334.2
Normal Fluid Service
  definition, 300.2
  requirements for, 300(d), 305.1, 306.1.1, 306.3.1, 306.4.1, 306.4.2, 306.5.1, 307.1.1, 308.1.1, 309.1.1, 311.1, 314.1, 315.2, 317.2, 318.1.1, Table 341.3.2, 341.4.1, A305, A306.1.1, A306.3, A306.5.1, A311.1, A314.1, A318.3, A341.4.1
Notch-sensitive, 300.2
Notch toughness (*see* impact testing *and* toughness)
NPS (*see* nominal pipe size)

Occasional loads, 302.3.6, A302.3.4, K302.3.6
Occasional variations (*see* allowances for pressure-temperature variations)
Oil piping coverage
  in-plant, 300.1.1
  transmission lines, 300.1.3, Fig. 301.1.1
Openings in closures, 304.4, A304.4, M304.4
Operators, qualification, 328.2, A328.2, K328.2
O-rings, 325
Outlet fittings, 304.3.1, 304.3.2, 304.4.2, 306.1.3, M306.5
Outlet headers (*see* extruded outlets)
Owner's
  approval, 328.3.1, 345.4.3, A345.5.1, K302.2.1, K304.8.5, K328.3
  guide to classif. fluid serv., App. M
  option for testing, 345.1, 345.7
  responsibilities, 300(b), 300(d), 300(e), 302.2.1, 302.2.4, 340.2, 346.3, M300(a), K300(a), K300(b), K302.2.1, K304.8.5, K328.3.1, K333, App. M
Owner's Inspector (*see* Inspector)
Oxidizing fluid service, F323.4, F335.9

Packaged equipment, 300.1.2, Fig. 300.1.1, 300.2
Packed joints, 304.7.4, 318, 318.2.3, 321.2.1, 335.6.2, A335.5, A335.6, K318, F323.1 (*see also* caulked joints)
Packing, joint or valve, 325, F323.1
Pad, reinforcing (*see* reinforcing ring)
Peening of welds, 328.5.1
Penetration (*see* joint penetration)
Performance testing, A304.7.2, K304.7.2
Petroleum refinery, def., 300.2
Pipe
  definitions, 300.2
  fittings, 306, A306, M306, K306
  fluid service requirements, 305, A305, M305, K305
  pressure design, 304.1, A304.1, K304.1
Pipe bends
  fluid service requirements, 306.2, A306.2, M306.2, K306.2
  pressure design, 304.2.1, A304.2.1, K304.2.1
Pipe hangers, 321.2.2, 321.3.1
Pipe supports, 300.2, 301.8, 321, A321, M321, K321
Piping
  clad, 323.4.3, K323.4.3
  Code coverage, 300.1.1, Fig. 300.1.1
  components (*see* components)
  connections for (*see* connections)
  cross-country, 300.1.3, Fig. 300.1.1
  definition, 300.2
  elements, def., 300.2
  excluded, 300.1.3, Fig. 300.1.1
  fire protection, 300.1.3
  high pressure (*see* high pressure piping)
  instrument (*see* instrument piping)
  jacketed, 301.7.3, 345.2.5
  joints (*see* joint; *see also* specific type of joint)
  lined (*see* lined piping)
  moments, 319.4.4
  movements, 319.6, A319.6
  pressure relief (*see* pressure relief piping)
  supports, 321, A321, M321, K321
  transmission lines, 300.1.3
Piping system, def., 300.2
Plumbing, 300.1.3

Copyright ASME International
Provided by IHS under license with ASME
No reproduction or networking permitted without license from IHS
Not for Resale

Pneumatic leak test, 341.4.1, 345.1, 345.5, A345.5, K345.1, K345.5
P-Numbers, 328.2.1, 328.2.2, 331.1.3, Tables 330.1.1 and 331.1.1, 332.4.1, 341.3.1, K330.1.1, K331.1, K332.4.1, Table A-1, Table K-1
Poisson's ratio, 319.3.3, A319.3.3
Postweld heat treatment (*see* heat treatment)
Power boilers, 300.1.3, Fig. 300.1.1
Precautions, App. F
  materials, F323.4, FA323.4
Preheating, 300.2, 330, Table 330.1.1, A328.4, K330
Preparation (*see also* joint preparation)
  for testing, 345.3
Pressure, allowable (*see* allowable pressure)
  design (*see* design pressure)
Pressure containment, 301.2.1, 301.2.2, 301.2.3
Pressure design, 303, 304, A303, A304, K303, K304
  bends, 304.2.1, A304.2.1, K304.2.1
  blanks, 304.5.3, K304.5.3
  blind flanges, 304.5.2, A304.5.2, K304.5.2
  branches, 304.3, A304.3, K304.3
  closures, 304.4, A304.4, K304.4
  crosses, 304.3.1, A304.3.2
  elbows, 304.2.2, A304.2.2, K304.2.2
  external pressure, 302.3.5, 304.1.3, 304.2.4, 304.3.3, 304.3.6, A302.3.3, A304.1.3, A304.3.2, K304.1.3, K304.2.4
  extruded outlets, 304.3.1, 304.3.4
  fatigue analysis, K304.8.4
  flanges, 304.5, A304.5, K304.5
  general, 303, A303, K303
  laterals, 304.3.1, A304.3.2
  miter bends, 304.2.3, A304.2.3
  multiple branches, 304.3.3, 304.3.4
  other components, 304.7, A304.7, K304.7
  pipe, 304.1, A304.1, K304.1
  reducers, 304.6, A304.6, K304.6
  tees, 304.3.2, A304.3.2
  welding outlets, 304.3.2, 304.4.2
Pressure relieving device, 301.2.2, 322.6, K322.6.3
Pressure relieving system, 301.2.2, 301.5.5, 302.2.4, 322.6, A322.6, M322.6, MA322, K322.6.3, F322.6
Pressure test, bellows expansion joint, X302.2.3
Pressure testing (*see* leak test)
Pressure-temperature
  design criteria, 302.2, A302.2, M302, K302.2
  ratings, 302.2.1, 303, 326, A326, K302.2.1, K303, Table K326.1
  variations (*see* allowances for)
Procedures
  bending, K332.1
  bonding, A328.2
  brazing, 333.1.1
  examination, 343
  forming, K332.3
  joining, A334
  operating, for piping, G300.2
  qualification of (*see* qualification)
  soldering, 333.4.1
  welding, 328.2, A329.1.2, K328.2
Process unit, 300.2
Progressive examination, 341.3.4, 341.5.1
Prohibitions, Introduction
Proof testing, 304.7
Protection of piping, G300.2, G300.3

Qualification
  bonders, bonding operators, A328.2
  bonding procedures, A328.2
  brazing, 333.1.1
  by others, 328.2.2, 328.2.3, A328.2.2, A328.2.3, K328.2.2, K328.2.3
  examination method, 343
  examiners, 342.1
  Owner's Inspector, 340.4
  records (*see* records)
  tests, 328.2.1, A328.2.5, K328.2.1
  welders, welding operators, 328.2.1, A329.1.2, K328.2.1
  welding procedures, 328.2, A329, K328.2
Quality assurance, weld, 319.4.5
Quality factor
  casting, 302.3.1, 302.3.3, K302.3.3, Table A-1A
  weld joint, 302.3.1, 302.3.4, K302.3.4, Table A-1B
Quantity of fluid, G300.1, G300.3

Radiography, 344.5, K344.5
  of castings, Tables 302.3.3C and 302.3.3D, K302.3.3, Table K302.3.3D
  of longitudinal joints, Tables 302.3.4, 341.3.2, and K341.3.2
  full (100%), Tables 302.3.3C and 302.3.3D, 302.3.4, 341.4.3, 344.5.3, 345.9.1, K341.4.1
  random, 341.4.1, 344.5.3, M341.4.1
  spot (*see* spot radiography)
Range, allowable stress (*see* allowable stress range)
Ratings
  at junction of services, 302.2.5, A302.2.5, M302.2.5
  pressure-temperature, 302.2.1, 303, 326, A302.2.1, A312, A326, K302.2.1, K303, Table K326.1
Reactions, piping, 319.5.2
Reclaimed materials, 323.1.4, A323.1.4, M323.1.4, K323.1.4
Records, 346
  bonding, A328.2.4
  examination, 341.4.1, 341.4.3
  procedure qualification (PQR), 300.2
  qualification, 328.2.4, 342.1, A328.2.4
  test, 345.2.7
  welding, 328.2.4
Reducers, 304.6, A304.6, K304.6
Referenced specifications, Apps. A, B, E, and K

Copyright ASME International
Provided by IHS under license with ASME
No reproduction or networking permitted without license from IHS
Not for Resale

Referenced standards, 326, A326, M326, Table K326.1, App. E
tables, Tables 326.1, A326.1, and K326.1
Refrigeration unit piping, 300.1.1, 300.1.2, Fig. 300.1.1
Regulatory considerations, Introduction
Reinforced plastic mortar (RPM)
assembly, A335.3.5
bonding, A328.5.1, A328.5.6, A328.5.7
design stresses, A302.3.2, App. B
fluid service requirements, A314.2.2, A323.4.2
Reinforced thermosetting resin (RTR)
assembly, A335.3.5
bonding, A328.5.1, A328.5.6, A328.5.7
design stresses, A302.3.2, App. B
fluid service requirements, A314.2.3, A323.4.2
Reinforcement of
branch conn., 300.2, 304.3.3, Fig. 304.3.3, 328.5.4, Fig. 328.5.4, K304.3.3, App. H
extruded outlet headers, 304.3.4, Fig. 304.3.4
welds, 300.2, Table 341.3.2, Fig. 341.3.2, Table K341.3.2
Reinforcing ring (or pad, or saddle), 304.3.3, 328.5.4, Fig. 328.5.4, 331.1.3, App. H
Relieving, pressure (*see* pressure relieving)
Repair of defects, Table 302.3.3C, 328.6, 335.2.1, 335.4.1, 341.3.3, A328.7, A329.1.2, A334.1, A335.8, A341.3.3, K328.6, K341.3.3
Requalification
bonder, bonding operator, A328.2.6
welder, welding operator, 328.1, K328.2.1
Request for revision, App. Z
Required examination, 341.4, A341.4, M341.4, K341.4
Requirements for welding (*see* welding requirements)
Resilient support, 321.2.3
Responsibility
bonding, A328.1
designer, 300(b), 300(c), 300(d), 300.4, K300(b)
erector, 300(b), 341.2
examiner, 341.2
fabricator (*see* fabricator responsibilities)
Inspector (*see* Inspector responsibilities)
manufacturer, 300(b), Table 323.2.2, 341.2
owner (*see* owner's responsibilities)
welding, 328.1, K328.1
Restraint
definition, 319.2.1
effects of, 319.2.1
fixtures, 321.2.1
loads due to, 301.7.1
materials, 321.1.4
Root
imperfections, Table 341.3.2, Fig. 341.3.2, Table K341.3.2
opening, 300.2, Figs. 328.4.2, 328.4.3, and 328.4.4
penetration, 328.5.4, Table 341.3.2, Fig. 341.3.2, Table K341.3.2
spacing (*see* welding preparation)
RPM (*see* reinforced plastic mortar)
RTR (*see* reinforced thermosetting resin)
Run (pipe), 304.3, 319.2.2, 319.4.1, 319.4.4, 328.5.4, App. H (*see also* header)

Saddle, 321.3.1, A306.5.2, A328.5.3, A328.5.4, A328.5.5, A328.5.6 (*see also* reinforcing ring)
Safeguarding, safeguards, 300(d), 300.2, 305.2.2, 308.2.4, 313, Table 314.2.1, 314.2.2, 315.2, 317.2, 318.2.3, 323.4.2, A323.4.1, A323.4.2, M300(d), FA323.4, App. G
Safety relief (*see* pressure relieving)
Scope of Code, 300.1
diagram of scope, Fig. 300.1.1
Seal bond, 300.2, A311.2.4, A328.7
Seal weld, 300.2, 311.2.6, 314.1, 328.5.3, 331.1.3, 335.3.2, K311.2.6
Sensitive leak test, 345.8, 345.9.3, M345.1, K345.1
Separator, 307, M307, K307
Set Pressure, 322.6.3
Severe cyclic conditions, 300(d), 300.2, 305.2.3, 306.1.4, 306.2.3, 306.3.3, 306.4.3, 306.5.2, 308.2.1, 308.2.4, 309.2.4, 311.2.2, 311.2.3, 314.1, 317.2, 318.2.2, 323.4.2, Table 341.3.2, 341.4.3, A300(e), M300(e), K302
Shear, allowable stress, 302.3.1, K302.3.1
Shear test, 323.4.3
Shielding of piping, G300.3
Shock, hydraulic, 301.5.1, 315.1, 321.1, A302.1, A304.7.2, A323.4.1, K304.7.2
thermal, A302.1, A304.7.2, A323.4.2, A335.8.1
Size of weld, 300.2, Fig. 328.5.2, 328.5.4, Fig. 328.5.4, 328.5.5, Fig. 328.5.5
Slag, 300.2, Tables 341.3.2 and K341.3.2
Sliding supports, 321.2.2
Slip-on flanges (*see* flanges)
Snow loads, 301.6.1, 321.1
Socket weld, 311.2.4, 311.2.5, 328.5.2, Fig. 328.5.2, 331.1.3, Table 341.3.2, 341.4.3, M311.1, K311.2.3
Soldered joints, 317, 325, 333, M317, K317.1, K333, F323.1
Soldering, 300.2, 333
Solvent cemented joints, A328.5.3
Spacing (*see* welding preparation)
Special joints, 318, 335.6, A318, A335.6, M318, M335.6, K318, K335.4
Special testing, 345.7, 345.8, 345.9
Specifications (*see also* standards)
indexes to, Apps. A, B, and K
listed, 302.2.1, 302.2.2, 323.1.1
referenced, Apps. A, B, E, and K
unlisted, 302.2.3, 323.1.2
Spiral weld (*see* longitudinal joint)
Spot radiography, Table 302.3.4, 341.5.1, 344.5.2
Spring support, 321.2.3

Copyright ASME International
Provided by IHS under license with ASME
No reproduction or networking permitted without license from IHS Not for Resale

Squirm (bellows expansion joint), X302.2.3
Stainless steel, Tables A-1, A-1A, A-1B, A-2, C-1, C-3, and C-6, F323.4
Standards (*see also* specifications)
  component, 302.2.1, 302.2.2, 302.2.3, 303, 326, A326, M326, K326
  dimensional, 326.1, M326.1
  rating, 302.2.1, 303, 326.2
  referenced, Tables 326.1, A326.1, K326.1, App. E
  unlisted, 302.2.3
Static sparking, A335.2.5
Status of Appendices, 300(f), 300.4
Steam piping coverage, 300.1.1, 300.1.3, Fig. 300.1.1
Steel, other than stainless, Tables A-1, A-1A, A-1B, A-2, C-1, C-3, and C-6, F323.4
Stiffening, pipe under external pressure, 304.1.3
Stop valves, 322.6.1, F332.6
Straight threads, 314.2.2, 335.3.3, M314.2.2, M335.3.3, K314.3.2, K341.4.1
Strainer, 307, M307, K307
Strains (*see* displacement strains)
Strength of branch conn., 304.3.2, A304.3.2, K304.3
Stress amplitude (alternating), K304.8.2, K304.8.3
Stress analysis, 319.4, 321.1.3, 345.9.2, A319.4, M319.4, K319
  experimental, 304.7.2
  fatigue, K304.8
  rigorous, 319.4.1, M319.4, K319
  simplified, 319.4.1, 319.4.2, M319.4
Stress evaluation, K304.8.4
Stress intensification factor, 319.3.6, 319.4.4, App. D
Stress range red. factor, 302.3.5, Table 302.3.5
Stresses
  allowable, 302.3.1, A302.3.1, K302.3.1, Apps. A, B, and K
  analysis (*see* stress analysis)
  bases, 302.3, A302.3, M302.3.2, K302.3.2
  bolt design, 302.3.2(a), Table A-2
  design (nonmetals), A302.3, App. B
  displacement, 319.2.2, A319.2.2
  displacement range, 302.3.5, 319.1, 319.3.4, K302.3.5
    allowable, 302.3.5, K302.3.5
    computed, 319.4.4
  flexibility, 319.2.2, 319.4.4, A319.2.2
  limits, 302.3.1, 302.3.5, 302.3.6, 321.1.3, A302.3.1, A302.3.3, A302.3.4, K302.3.1, K302.3.5, K302.3.6
  longitudinal, 302.3.5, K302.3.5
  occasional loads, 302.2.4, 302.3.6, A302.2.4, A302.3.4, M302.2.4, MA302.2.4, K302.2.4, K302.3.6
  pressure, 304, A304, M304, MA304, K304
  sustained loads, 302.3.5, A302.3.3, K302.3.5
  tabulated, Tables A-1, A-2, B-1, and K-1
  terms, defined, 300.2
Structural attachments, 321.3
  definition (*see* pipe-supporting elements)
Structural connections, 321.4
Structures, support, 321.4 (*see also* piping. def.)
Sulfur compounds, effects, F323.4
Supplementary examination, 341.5, A341.5, K341.5
Supports, 321, A321, M321, K321
  anchors, 319.5.1, 319.7, 321.2.1, A319.7
  attachments, 311.2.5, 321.3, 328.5.2, 331.1.3, Tables 341.3.2 and K341.3.2
  brackets, 321.3.2
  brittle piping, A321.5.3
  constant weight, 321.2.3
  counterweight, 321.2.4
  definitions (*see* pipe-supporting elements)
  design, 321.1, A321.5, K321
  fixtures, 321.2
  guides, 321.2.1
  hangers, 321.2.2, 321.3.1
  hydraulic, 321.2.5
  inextensible, 321.2.2
  loads, 321.1
  materials, 321.1.4, M321.1.4
  movements, 301.8, 319.2.1
  nonmetals, A321.5
  resilient, 321.2.3
  sliding, 321.2.2
  spring, 321.2.3
  structure, 321.4 (*see also* piping, def.)
  threads for, 321.1.5
Surface texture/finish, Tables 326.1, 341.3.2, K341.3.2
Sustained loads, 302.3.5, A302.3.3, K302.3.5
Swivel joints, 319.7, A319.7
Symbols, 300.3, App. J (*see also* abbreviations, nonmetals)
System, piping
  definition, 300.2
Systems (specific), design, 322, M322, K322

Tack welds, 300.2, 328.5.1, K328.5.1
Tank farm piping, 300.1.1, Fig. 300.1.1
Tantalum, F323.4
Taper threads, 314.2.1, 335.3, A314.2.1, M314.2.1, M335.3.4, K314.3.1, K344.4.1
Tapped bolt holes, 309.3, A309.3
Tees, 304.3, 319.4.4, A304.3.2 (*see also* branches and fittings)
Temperature
  cycles, 302.3.5, 319.2.3, K304.8.1
  design (*see* design temperature)
  gradients, 301.7.2, K304.7.2, F301.7
  limits, limitations, 323.2, A323.2.2, Table A323.4.3, M323.2, K323.2
  minimum (*see* design minimum temperature)
Test, 345, A345, M345, K345
  assembly, A328.2.5
  joint, 328.2.2, K328.2.1
  loads, 302.3.6, 321.1, K302.3.6
  records, 345.2.7

Copyright ASME International
Provided by IHS under license with ASME
No reproduction or networking permitted without license from IHS
Not for Resale

requirements, 323.4.3, 328.2.2, 345.1, K328.2.1, K345.1
stresses, 302.3.6, 345.2.1, A302.3.4
Test,
alternative, 345.9, K345.1
burst, A328.2.5(b)
hardness, 331.1.7, 341.5.2
hydrostatic, 345.1, 345.4, A328.2.5(c), A345.1, A345.4, K345.1, K345.4
impact, Table 323.2.2, 323.3, Table 323.3.1, K323.3, Table K323.3.1, F323.4
leak, 345.1, A345.1, K345.1
performance, A304.7.2, K304.7.2
pneumatic, 341.4.1, 345.1, 345.5, K345.1
pressure, 345, K345
proof, 304.7.2
qualification, 328.2.1, A328.2.5, K328.2.1
sensitive leak, 345.8, M345, K345.1
shear, 323.4.3
toughness (*see* impact)
Thermal
analysis (*see* flexibility analysis)
cycling, 301.10, 302.3.5, 319.2, A319.2, K302.3.5, K304.8
gradients, 301.7.2, K304.7.2, F301.7
Thermal expansion
coefficients, 319.3.1, A319.3.1, App. C
data, App. C
differential, 301.7.3
effects (*see* expansion effects)
of fluids, 301.4.2
of piping, 301.7, 319, A319, M319, K319
relief, 301.2.2
stresses, 319.2.2, 319.4, A319.2.2
Thermally induced loads, 301.7, F301.7
Thermoplastics
bonding, A328.5.1, A328.5.2, A328.5.3, A328.5.4
definition, 300.2
design stresses, A302.3.2, App. B
fluid service requirements, A314.2.1, A323.4.2
precautions, FA323.4
Thermosetting resin, (including RPM, RTR)
definition, 300.2
Thickness
allowances, 302.4, 304.1.1, 304.4.1, 304.5.2, 304.5.3, A304.1.1, K304.1.1, K304.5.2
effect on heat treatment, 331.1.3, K331.1.3
Threaded joints
assembly, 335.3, 341.4.1, 341.4.3, A335.3, M335.3, K341.4.1
fluid service requirements, 314, A314, M314, MA314.1, K314
seal bonds, A311.2.4, A328.6, A335.3.2
seal welds, 311.2.6, 314.1, 328.5.3, 335.3.2, K311.2.6, K335.6
Threads
allowance, 302.4, 304.1.1, A304.1.1, K304.1.1
compound, 314.1, 325, 335.3.1, 335.3.2, A335.3.2
condition of, M335.3.4, K341.4.1
for supports, 321.1.5
lubricant, 325, 335.3.1, A314.2.1
sealant, A314.2.1, A335.3.2, A335.3.5
standards, Tables 326.1, A326.1, and K326.1
Tie rods, 319.7, A319.7
Tin
effects, F323.4
fluid service requirements, 323.4.2
Titanium, Tables A-1 and A-1B, F323.4
Tolerances, 328.4.3, Figs. 328.4.3 and 328.4.4, A328.2.1
Torque, bolting (*see* bolting torque)
Toughness, 301.9 (*see also* impact test)
requirements, 314.2.1, 323.2.2, 323.3, K323.2.2, K323.3
Transmission pipelines, 300.1.3, Fig. 300.1.1
Trap, 307, K307
Tubing joints, 315, 335.4, A315, A335.4, M315, M335.4, K315
Tungsten inclusion, Table 341.3.2
Two-phase flow, 301.7.2, F301.7

Ultrasonic examination, Table 302.3.3C, 341.4.1, 341.4.3, 344.6, K305.1, K341.4.1, K344.6
Unbalanced piping system, 319.2.2, 319.7, A319.2.2, A319.7
Uninsulated piping, 301.3.2
Unknown materials, 321.1.4, 323.1.3, M323.1.3, K323.1.3
Unlisted
components (*see* components, unlisted)
joints, 315.3, 318.1.2
materials, 323.1.2
Unstable fluids, 300(c), F323(a)
Used materials, 323.1.4, A323.1.4, M323.1.4, K323.1.4

Valve packing, 300(c), 325, F307, F323.1
Valves
fluid service requirements, 302.2.5, 307, 323.4.2, A302.2.5, M302.2.5, M307, K307, F307
heat treatment, 328.5.1
relief, 301.2.2, 322.6.3 (*see also* device)
stop, 322.6.1, F322.6
Variations, pressure-temperature (*see* allowances for)
Vent (piping) (*see* pressure relief piping)
Venting (welds), 328.5.4, F308.2
Vibration effects, 301.5.4, 304.7.2, 313, 315.1, 321.1, A304.7.2, A323.4.1, M301.5.4, K301.5.4, K304.7.2
Visual examination, 302.3.3, Table 341.3.2, 341.4, 344.2, Table K341.3.2, K341.4.1

Copyright ASME International
Provided by IHS under license with ASME
No reproduction or networking permitted without license from IHS
Not for Resale

Wall thickness
allowance, 302.4, 304.1.1, A304.1.1, K304.1.1
governing, 331.1.1, K331.1.1
pressure design, 304, A304, K304
thinner component $\overline{T}_w$, Table 341.3.2, 344.6.2, Table K341.3.2, App. J
Water hammer, 301.5.1
Water piping coverage, 300.1.1, 300.1.3
Weight loads, 301.6, 321.1
Weld (*see also* welded joints; welds; welding)
definition, 300.2
fluid service limitations, 311, A318.3, M311, K311
hardness limits, 331.1.7
identification, 328.5.1
quality assurance, required, 319.4.5
quality factor E_j, 302.3.4, Tables 302.3.4 and A-1B, K302.3.4
reinforcement (excess thickness), 300.2, Table 341.3.2, Fig. 341.3.2, Table K341.3.2
size, 300.2, Figs. 328.5.2, 328.5.4, and 328.5.5
Welded joints
acceptance criteria (imperfections), Table 341.3.2, Fig. 341.3.2, Table K341.3.2
fabrication, 328, A328.5.2, A329, M328, K328
fluid service requirements, 311, A318.3, M311, K311
Welder, 300.2, 328.2, A329.1.2, K328.2
Welding
alignment, 328.4.3, K328.4.3
environment, 328.5.1
heat treatment, 331, M331, K331
hot gas, A328.5.2
imperfections (*see* welded joints)
interrupted (*see* interrupted welding)
materials, 328.3, M328.3, K328.3
nonmetallic lined pipe, A318.3, A329
of aluminum, 323.4.2
of metals, 328, K328
operator, 300.2, 328.2, A329.1.2, K328.2
preheating, 330, Table 330.1.1, K330
preparation, 328.4, K328.4
procedures, 300.2, 328.2, A329.1.2, K328.2
qualification, 328.2, A329.1.2, K328.2
quality assurance, 319.4.5, 341.3
records, 328.2.4, K328.2.4
repair, Table 302.3.3C, 328.6, 341.3.3, A329.1.2, K328.6, K341.3.3
requirements, 328.5, A329, K328.5
responsibility, 328.1, K328.1
spacing, 328.4.3
Welding neck flanges (*see* flanges)
Welding outlet fittings, 304.3.1, 304.4.2, 306.1.2, M304.3.2
Welds
branch, 328.4.3, Fig. 328.4.4, 328.5.4, Fig. 328.5.4, K328.4.3, K328.5.4, Fig. K328.5.4
circumferential, 328.4.2, 328.4.3, 328.5.1, K328.4.2, K328.4.3, K328.5.1
closure, 345.2.3(c)
dissimilar metals, 331.2.3
fillet (*see* fillet weld)
laps (*see* fabricated laps)
longitudinal (*see* longitudinal joints)
miter, 328.4.3
seal, 328.5.3
socket, 328.5.2, Fig. 328.5.2C
tack, 328.5.1, K328.5.1
Wind loads, 301.5.2, 302.3.6, 321.1, A302.3.4, K302.3.6
Wrapped (*see* butt-and-wrapped)

X-ray examination (*see* radiography)

Young's modulus, 319.3.2, A319.3.2, App. C, App. D
Y-values (for metal pipe), 304.1.1, Table 304.1.1

Zinc
coatings, K323.4.2
effects, F323.4
Zirconium and zirconium alloys, F323.4

Copyright ASME International
Provided by IHS under license with ASME
No reproduction or networking permitted without license from IHS
Not for Resale

NOTES FOR INDEX

GENERAL NOTES:

(a) Reference is not made to a paragraph that merely states that a previous paragraph applies.

(b) To locate references with letter prefix:

Prefix	Location	Prefix	Location	Prefix	Location
A*	Chapter VII	G	App. G	M	Chapter VIII
B	App. B	H	App. H	MA	Chapter VIII
C	App. C	K	Chapter IX, App. K	X	Appendix X
D	App. D				
F	App. F				

*For Tables A-1, A-1A, A-1B, and A-2, see Appendix A.

Copyright ASME International
Provided by IHS under license with ASME
No reproduction or networking permitted without license from IHS
Not for Resale

Copyright ASME International
Provided by IHS under license with ASME
No reproduction or networking permitted without license from IHS
Not for Resale

ASME B31.3
INTERPRETATIONS NO. 19

Replies to Technical Inquiries
April 1, 2001 through October 31, 2003

General Information

It has been agreed to publish interpretations issued by the B31 Committee concerning B31.3 as part of the update service to the Code. The interpretations have been assigned numbers in chronological order. Each interpretation applies to the Edition stated in the interpretation, or if none is stated, to the Edition in effect on the date of issuance of the interpretation. Subsequent revisions to the Code may have superseded the reply. **These interpretations are not part of the Code.**

These replies are taken verbatim from the original letters, except for a few typographical and editorial corrections made for the purpose of improved clarity. In some instances, a review of the interpretation revealed a need for corrections of a technical nature. In these cases, a revised reply bearing the original interpretation number with the suffix R is presented.

ASME procedures provide for reconsideration of these interpretations when or if additional information is available which the inquirer believes might affect the interpretation. Further, persons aggrieved by an interpretation may appeal to the cognizant ASME committee or subcommittee. As stated in the Statement of Policy in the Code documents, ASME does not "approve," "certify," "rate," or "endorse" any item, construction, proprietary device, or activity.

For detailed instructions on preparation of technical inquiries to the B31 Committee, refer to Appendix Z.

Numerical and Subject Indexes

Numerical and Subject Indexes have been prepared to assist the user in locating interpretations by location or by subject matter in the Code. They cover interpretations issued from Volume 1 up to and including the present volume, and will be updated with each volume.

Copyright ASME International
Provided by IHS under license with ASME
No reproduction or networking permitted without license from IHS
Not for Resale

B31.3

Subject	Interpretation	File No.
Para. 300, General Statements	19-11	B31-02-02436
Paras. 300(c)(3) and 304.7.2, Radiographic Survey Plugs	19-48	B31-03-01455
Para. 300(c)(5), Gas Pressure Reducing Station	19-31	B31-03-00062
Para. 300.2, Definition of Fluid Service	19-34	B31-03-00437
Para. 302, Unlisted Component	19-03	B31-01-037
Para. 302.2.2, Pressure Ratings	19-02	B31-01-036
Para. 302.2.3, Unlisted Components	19-19	B31-02-03075
Para. 302.3.2(a)(3), Bases for Design Stresses	19-37	B31-03-00694
Para. 302.3.2(d), Bases for Design Stresses	19-38	B31-03-00734
Para. 302.3.6, Limits of Calculated Stress Due to Occasional Loads	19-18	B31-02-03074
Para. 304.3.1(a)(2), Branch Connections	19-33	B31-03-00429
Para. 304.5, Pressure Design of Flanges and Blanks	19-12	B31-02-02440
Para. 304.7.2, Metric Size Piping Components	19-29	B31-02-04110
Para. 318.2.2, Mechanical Interlock	19-45	B31-03-01345
Para. 319.3.1(a), Thermal Expansion Data	19-40	B31-03-00829
Para. 321.1.4(e), Piping Support Materials	19-36	B31-03-00482
Para. 322.6.3, Reference to BPV Section VIII, Division 1, Para. UG-128	19-41	B31-03-00827
Para. 323.1, Materials and Specifications	19-28	B31-02-04056
Para. 323.1.2, Unlisted Materials	19-27	B31-02-03884
Para. 323.2.2, Lower Temperature Limits, Listed Materials	19-07	B31-01-048
Para. 323.2.2, Lower Temperature Limits	19-47	B31-03-01347
Table 323.2.2, Requirements for Low Temperature Toughness Tests for Metals and Para. 323.3, Impact Testing Methods and Criteria	19-21	B31-02-03629
Table 323.2.2, Requirements for Low Temperature Tests for Metals	19-35	B31-03-00479
Para. 323.2.2(d), Lower Temperature Limits, Listed Materials	19-39	B31-03-00821
Table 326.1, Partial Compliance ASME B16.9 Fittings	19-14	B31-02-03069
Fig. 328, Weld End Configurations	19-16	B31-02-03071
Para. 328.2.1, Welding Qualification	19-22	B31-02-03631
Para. 328.2.2(i), Welding Qualification	19-26	B31-02-03819
Para. 328.5.2, Fillet and Socket Welds	19-20	B31-02-03076
Paras. 331.1.1, Heat Treatment Requirements and 341.3.1, General	19-15	B31-02-03070
Para. 331.1.3, Governing Thickness	19-24	B31-02-03634
Paras. 332.1, General and 332.4, Required Heat Treatment	19-04	B31-01-038
Paras. 341 and 345, Repair or Replacement of Piping	19-49	B31-03-01441
Para. 341.4.1(b)(1), Production Welds	19-05	B31-01-039
Para. 341.4.1(b)(1), Extent of Required Examination	19-42	B31-03-00828
Paras. 344.2.1, Definition and 344.7, In-Process Examination	19-17	B31-02-03073
Para. 345, Testing	19-30	B31-02-04197
Paras. 345, Testing and 345.2.6, Repairs or Additions After Leak Testing	19-23	B31-02-03632
Para. 345.2.5, Leak Test	19-44	B31-03-01343
Para. 345.4, Hydrostatic Leak Test	19-25	B31-02-03683
Para. 345.4.2, Test Pressures	19-10	B31-02-02434
Para. 345.5, Pneumatic Leak Test	19-32	B31-03-00264
Para. 345.8, Sensitive Leak Test	19-06	B31-01-047
Para. MA323.4, Nonmetallic Materials	19-08	B31-01-053
Para. K323.1.2, Allowable Stress Values	19-09	B31-01-006
Table A-1, Allowable Stress Values for Carbon Steel Piping	19-46	B31-03-01346
Table A-1, Figure 323.2.2A, Impact Testing	19-43	B31-03-00906
Appendix B, Stress Tables and Allowable Pressure Tables for Nonmetals	19-13	B31-02-02441
Appendix E, Later Editions	19-01	B31-01-035

Copyright ASME International
Provided by IHS under license with ASME
No reproduction or networking permitted without license from IHS
Not for Resale

Interpretation: 19-01

Subject: B31.3-1999 Edition (2000 Addenda), Appendix E, Later Editions

Date Issued: January 4, 2002

File: B31-01-035

Question: May later editions/addenda of a section of the ASME Boiler and Pressure Vessel Code than that listed in Appendix E be used for construction in accordance with B31.3?

Reply: No, unless specified in the engineering design. See para. 300(c).

Interpretation: 19-02

Subject: B31.3-1999 Edition (2000 Addenda), Para. 302.2.2, Pressure Ratings

Date Issued: January 4, 2002

File: B31-01-036

Question: May components manufactured in accordance with standards listed in Table 326.1, which state pressure-temperature ratings are based on straight seamless pipe, have their pressure ratings established in accordance with para. 302.2.2?

Reply: Yes.

Interpretation: 19-03

Subject: B31.3-1999 Edition (2000 Addenda), Para. 302, Unlisted Component

Date Issued: January 4, 2002

File: B31-01-037

Question: May an unlisted component, such as a clamp connector designed by the rules of the ASME Boiler and Pressure Vessel Code, Section VIII, Division 1, Appendix 24, be in a B31.3 piping system?

Reply: Yes, provided that it meets all of the applicable requirements of the B31.3 Code, including para. 302.2.3.

Copyright ASME International
Provided by IHS under license with ASME
No reproduction or networking permitted without license from IHS Not for Resale

Interpretation: 19-04

Subject: B31.3-1999 Edition (2000 Addenda), Para. 332.1, General and Para. 332.4, Required Heat Treatment

Date Issued: January 4, 2002

File: B31-01-038

Question (1): May pipe be bent using both hot and cold methods simultaneously on the same bend, such as might occur during the induction bending process?

Reply (1): Yes.

Question (2): For P-Nos. 3, 4, 5, 6, and 10a materials in which pipe is bent using both hot and cold methods simultaneously on the same bend (such as might occur during the induction bending process), is heat treatment required after bending in accordance with para. 332.4.1?

Reply (2): Yes.

Question (3): For P-Nos. 3, 4, 5, 6, and 10a materials in which pipe is bent using both hot and cold methods simultaneously on the same bend (such as might occur during the induction bending process), is heat treatment required after bending in accordance with para. 332.4.2 if none of the conditions in para. 332.4.2(a), (b), or (c) exist?

Reply (3): No; however, heat treatment would be required in accordance with para. 332.4.1.

Question (4): For materials other than P-Nos. 3, 4, 5, 6, and 10a materials in which pipe is bent using both hot and methods simultaneously on the same bend (such as might occur during the induction bending process), is heat treatment after bending in accordance with para. 332.4.2 required if none of the conditions in paras. 332.4.2(a), (b), or (c) exist?

Reply (4): No, unless otherwise specified in the engineering design.

Interpretation: 19-05

Subject: B31.3-1999 (2000 Addenda), Para. 341.4.1(b)(1), Production Welds

Date Issued: January 4, 2002

File: B31-01-039

Question: In accordance with ASME B31.3-1999 Edition, 2000 Addenda, para. 341.4.1(b)(1), do production welds include both shop and field welding?

Reply: Yes.

--`,,```,,,,````-`-`,,`,,`,`,,`---

Copyright ASME International
Provided by IHS under license with ASME
No reproduction or networking permitted without license from IHS Not for Resale

Interpretation: 19-06

Subject: B31.3-1999 Edition (2000 Addenda), Para. 345.8, Sensitive Leak Test

Date Issued: January 4, 2002

File: B31-01-047

Question (1): In accordance with ASME B31.3-1999 Edition, Addenda (a), does the Gas and Bubble Test method specified in para. 345.8 refer to the Bubble Test – Direct Pressure Technique specified in Boiler and Pressure Vessel Code, Section V, Article 10?

Reply (1): Yes.

Question (2): In accordance with ASME B31.3-1999 Edition, Addenda (a), must the Bubble Test – Direct Pressure Technique specified in Boiler and Pressure Vessel Code, Section V, Article 10 demonstrate a sensitivity of at least 10^{-3} atm-ml/sec to meet the requirements of a sensitive leak test in para. 345.8?

Reply (2): No.

Interpretation: 19-07

Subject: B31.3-1999 Edition, Para. 323.2.2, Lower Temperature Limits, Listed Materials

Date Issued: January 4, 2002

File: B31-01-048

Question: In accordance with ASME B31.3-1999 Edition, may ASTM A 350 LF2 material be used at temperatures below −50°F with no further impact testing?

Reply: Yes, provided that the requirements of para. 323.2.2(d) and Fig. 323.2.2B are met. See also para. F301.

Interpretation: 19-08

Subject: B31.3-1999, 2000 Addenda, Para. MA323.4, Nonmetallic Materials

Date Issued: January 4, 2002

File: B31-01-053

Question: In accordance with ASME B31.3-1999 (2000 Addenda), does para. MA323.4 prohibit reinforced thermosetting resin (RTR) or borosilicate glass piping?

Reply: No.

Copyright ASME International
Provided by IHS under license with ASME
No reproduction or networking permitted without license from IHS Not for Resale

Interpretation: 19-09

Subject: B31.3-1999 Edition (2000 Addenda), Para. K323.1.2, Allowable Stress Values

Date Issued: March 6, 2002

File: B31-01-006

Question: Is it the intent of ASME B31.3a-2000, para. K323.1.2 to require that the allowable stress value at design temperature for an unlisted alloy steel pipe material for a High Pressure Fluid Service application not exceed the lower of two-thirds of the specified minimum yield strength at room temperature, and two-thirds of the yield strength at temperature, in accordance with para. K302.3.2(d)?

Reply: Yes.

Interpretation: 19-10

Subject: B31.3-1999 Edition (2001 Addenda), Para. 345.4.2, Test Pressures

Date Issued: July 1, 2002

File: B31-02-02434

Question (1): In accordance with ASME B31.3-1999 Edition (2001 Addenda), must the minimum hydrostatic test pressure for flanges and flanged valves be calculated in accordance with equation (24)?

Reply (1): Yes, except when para. 345.4.2(c) applies.

Question (2): In accordance with ASME B31.3-1999 Edition (2001 Addenda), may the designer, owner, or end user waive the requirements of para. 345.4.2?

Reply (2): No.

Copyright ASME International
Provided by IHS under license with ASME
No reproduction or networking permitted without license from IHS Not for Resale

Interpretation: 19-11

Subject: B31.3-1999 Edition and 2001 Addenda, Para. 300, General Statements

Date Issued: July 1, 2002

File: B31-02-02436

Question (1): In accordance with ASME B31.3-1999 Edition (2001 Addenda), is it the responsibility of the owner to establish the design requirements necessary for determining the piping design loads?

Reply (1): Yes. See para. 300(b).

Question (2): In accordance with ASME B31.3-1999 Edition (2001 Addenda), is it the responsibility of the designer to determine the piping design based upon design requirements established by the owner?

Reply (2): Yes. See para. 300(b).

Question (3): Does the Code define the excessive and harmful effects of vibration referenced in para. 301.5.4?

Reply (3): No.

Question (4): Does para. 301.5.4 require complete elimination of vibration?

Reply (4): No.

Question (5): Does B31.3 permit the designer to determine acceptance criteria for loads and conditions where no such criteria are provided by the Code?

Reply (5): Yes, with acceptance by the owner; see para. 300(c)(3). Also see para. 300(c)(5).

Question (6): In accordance with ASME B31.3-1999 Edition (2001 Addenda), para. K323.2.4(a), when a designer uses an unlisted material, or when a listed material is to be used above the highest temperature for which stress values appear in Appendix K, shall the designer demonstrate the validity of the allowable stresses and other design limits to the owner?

Reply (6): Yes. See para. 300(b)(2).

Interpretation: 19-12

Subject: B31.3-1999 Edition (2001 Addenda), Para. 304.5, Pressure Design of Flanges and Blanks

Date Issued: July 1, 2002

File: B31-02-02440

Question (1): May an ASME B16.5 blind flange be bored and used as a lapped flange in B31.3 piping systems without meeting the requirements of para. 304.5.1?

Reply (1): No.

Question (2): May a lapped flange be fabricated from plate for use in B31.3 piping systems?

Reply (2): Yes, provided the design meets the requirements of para. 304.5.1.

Copyright ASME International
Provided by IHS under license with ASME
No reproduction or networking permitted without license from IHS Not for Resale

Interpretation: 19-13

Subject: B31.3-1999 Edition (2001 Addenda), Appendix B, Stress Tables and Allowable Pressure Tables for Nonmetals

Date Issued: July 1, 2002

File: B31-02-02441

Question (1): In accordance with ASME B31.3-1999 Edition (2001 Addenda), may hydrostatic design stresses (HDS) be extrapolated for temperatures outside the range listed in Appendix B?

Reply (1): No.

Question (2): In accordance with B31.3-1999 Edition (2001 Addenda), may hydrostatic design stresses (HDS) exceeding those listed in Appendix B be used for pressure design calculations?

Reply (2): Yes, if developed in accordance with paras. A302.3.2 and A323.2.1.

Question (3): In accordance with B31.3-1999 Edition (2001 Addenda), may plastic materials not listed in Appendix B be used in pressure-containing piping components?

Reply (3): Yes. See para. A323.

Intepretation: 19-14

Subject: B31.3-1999 Edition, Table 326.1, Partial Compliance ASME B16.9 Fittings

Date Issued: July 1, 2002

File: B31-02-03069

Question: According to ASME B31.3-1999 Edition, may a partial compliance fitting as defined in ASME B16.9-1993 Edition be considered a listed component?

Reply: Yes, see para. 326.

Interpretation: 19-15

Subject: B31.3-1999 Edition (2001 Addenda), Para. 331.1.1, Heat Treatment Requirements and Para. 341.3.1, General

Date Issued: July 1, 2002

File: B31-02-03070

Question (1): In accordance with ASME B31.3-1999 Edition (2001 Addenda), para. 331.1.1(c) is the term “final welds” defined?

Reply (1): No.

Question (2): In accordance with ASME B31.3-1999 Edition (2001 Addenda), para. 341.3.1, is NDE examination of piping constructed of P1 or P2 materials required to be performed after final heat treatment?

Reply (2): No.

Copyright ASME International
Provided by IHS under license with ASME
No reproduction or networking permitted without license from IHS Not for Resale

Interpretation: 19-16

Subject: B31.3-1999 Edition (2001 Addenda), Fig. 328, Weld End Configurations

Date Issued: July 1, 2002

File: B31-02-03071

Question: In accordance with ASME B31.3-1999 Edition (2001 Addenda), is it required that the weld end configurations be identical on both sides of the weld?

Reply: No, except that a combination of the configuration types must meet the requirements of the WPS. See para. 328.4.2(a)(2).

Interpretation: 19-17

Subject: B31.3-1999 Edition (2001 Addenda), Para. 344.2.1, Definition and Para. 344.7, In-Process Examination

Date Issued: July 1, 2002

File: B31-02-03073

Question (1): In accordance with ASME B31.3-1999 Edition (2001 Addenda), does the Code require the examiner to be present 100% of the time during all welding operations?

Reply (1): No.

Question (2): In accordance with ASME B31.3-1999 Edition (2001 Addenda), does the Code require the examiner to be present 100% of the time for in-process examination described in para. 344.7?

Reply (2): No, but the examiner must be present to examine points (a) through (g), as applicable, for the entire weld.

Interpretation: 19-18

Subject: B31.3-1999 Edition (2001 Addenda), Para. 302.3.6, Limits of Calculated Stress Due to Occasional Loads

Date Issued: July 1, 2002

File: B31-02-03074

Question: Does para. 302.3.6(a) include occasional internal pressure loads (e.g., surges, spikes, peaks, and water hammer) in the summation of longitudinal stresses due to sustained and occasional loads?

Reply: Yes. In addition, all pressure variations must meet the requirements of para. 302.2.4.

Interpretation: 19-19

Subject: B31.3-1999 Edition (2001 Addenda), Para. 302.2.3, Unlisted Components

Date Issued: July 1, 2002

File: B31-02-03075

Question: When qualifying an unlisted component for use in a B31.3 piping system by calculation under para. 302.2.3, shall the calculations be based on the B31.3 allowable stresses?

Reply: Yes.

Copyright ASME International
Provided by IHS under license with ASME
No reproduction or networking permitted without license from IHS Not for Resale

Interpretation: 19-20

Subject: B31.3-1999 Edition (2001 Addenda), Para. 328.5.2, Fillet and Socket Welds

Date Issued: July 1, 2002

File: B31-02-03076

Question (1): In accordance with ASME B31.3-1999 Edition (2001 Addenda), paras. 328.5.2(a) and 328.5.2(b), may a slip-on flange be welded on the face side and intermittent welded on the hub side?

Reply (1): No.

Question (2): In accordance with ASME B31.3-1999 Edition (2001 Addenda), does the Code permit slip-on flanges to be welded on the face side, with the back side (hub side) stitch welded (intermittent welded) when qualified in accordance with para. 300(c)(3)?

Reply (2): Yes.

Interpretation: 19-21

Subject: ASME B31.3-2002, Table 323.2.2, Requirements for Low Temperature Toughness Tests for Metals and Para. 323.3, Impact Testing Methods and Criteria

Date Issued: October 10, 2002

File: B31-02-03629

Question (1): In accordance with ASME B31.3-2002, if a welding procedure has been qualified by impact testing for service at a temperature of −49°C in accordance with para. 323.3, but the base material and weld material were impact tested at a warmer temperature in accordance with their respective material specifications, may the weld procedure be used for service at temperatures as low as −49°C?

Reply (1): Yes.

Question (2): Is it a requirement of ASME B31.3-2002 that the same brand and batch number of material, as used in weld procedure qualification impact testing, be used for production welds?

Reply (2): No. See Note (2) of Table 323.2.2.

Interpretation: 19-22

Subject: ASME B31.3-2002, Para. 328.2.1, Welding Qualification

Date Issued: October 10, 2002

File: B31-02-03631

Question: In accordance with ASME B31.3-2002, does an original WPS need to be revised to include any changed nonessential variable?

Reply: Yes. See para. 328.2.1 and BPV Code Section IX.

Copyright ASME International
Provided by IHS under license with ASME
No reproduction or networking permitted without license from IHS Not for Resale

Interpretation: 19-23

Subject: ASME B31.3-2002, Para. 345, Testing and Para. 345.2.6, Repairs or Additions After Leak Testing

Date Issued: October 10, 2002

File: B31-02-03632

Question (1): Is it the intent of ASME B31.3-2002, para. 345 that structural attachment welds to piping be examined for leaks during hydrostatic test, pneumatic test, combination hydrostatic-pneumatic test, or sensitive leak test?

Reply (1): Yes.

Question (2): Is it the intent of ASME B31.3-2002, para. 345.2.6 that structural attachments to piping, following leak testing, be considered an "addition" that may not require retesting as long as precautionary measures are taken to assure sound construction and the owner agrees?

Reply (2): Yes, provided the additions are minor.

Interpretation: 19-24

Subject: ASME B31.3-2002, Para. 331.1.3, Governing Thickness

Date Issued: October 10, 2002

File: B31-02-03634

Question: In accordance with ASME B31.3-2002, para. 331.1.3, is postweld heat treatment required for branch connection welds when the thickness of the components at the joint is greater than the nominal thickness listed in Table 331.1.1, but the thickness through the weld in any plane is less than two times the nominal wall thickness listed?

Reply: No. See para. 331.1.3(a).

Interpretation: 19-25

Subject: ASME B31.3-2002, Para. 345.4, Hydrostatic Leak Test

Date Issued: October 10, 2002

File: B31-02-03683

Question: In accordance with ASME B31.3-2002, is it permitted to hydrotest at a lower pressure than required by para. 345.4 because B31.3 piping is connected to piping constructed to another ASME B31 Code which allows a lower hydrotest pressure?

Reply: No.

Copyright ASME International
Provided by IHS under license with ASME
No reproduction or networking permitted without license from IHS Not for Resale

Interpretation: 19-26

Subject: ASME B31.3-1999 Edition, Para. 328.2.2(i), Welding Qualification

Date Issued: October 10, 2002

File: B31-02-03819

Question: In accordance with ASME B31.3-1999 (2001 Addenda), para. 328.2.2(i), when using welding procedures qualified by others, must all welders qualified to a specific WPS be qualified by bend testing under BPV Section IX, para. QW-302?

Reply: No. Only one welder must be qualified to the specific WPS by the requirements of BPV Section IX, para. QW-302. All others may be qualified in accordance with ASME B31.3, para. 328.2.

Interpretation: 19-27

Subject: ASME B31.3-2002, Para. 323.1.2, Unlisted Materials

Date Issued: May 29, 2003

File: B31-02-03884

Question: Does ASME B31.3-2002 permit a material not listed in Appendix A to be used in the design of a pressure containing system?

Reply: Yes. See para. 323.1.2.

Intepretation: 19-28

Subject: ASME B31.3-2002, Para. 323.1, Materials and Specifications

Date Issued: May 29, 2003

File: B31-02-04056

Question: Does ASME B31.3-2002 require maintenance of traceability to a heat number marking of a component that is removed or rendered unreadable during the fabrication process?

Reply: No.

Interpretation: 19-29

Subject: ASME B31.3-2002, Para. 304.7.2, Metric Size Piping Components

Date Issued: May 29, 2003

File: B31-02-04110

Question: In accordance with ASME B31.3-2002, if unlisted components are qualified for use in B31.3 piping systems in accordance with para. 304.7.2 in IPS sizes, are they also qualified in metric sizes?

Reply: It is the responsibility of the manufacturer to determine that the fittings are qualified, considering para. 304.7.2(e).

Copyright ASME International
Provided by IHS under license with ASME
No reproduction or networking permitted without license from IHS Not for Resale

Interpretation: 19-30

Subject: ASME B31.3-2002, Para. 345, Testing

Date Issued: May 29, 2003

File: B31-02-04197

Question (1): In accordance with ASME B31.3-2002, if an owner considers a hydrostatic leak test impractical for reasons listed in para. 345.1(b) for non-jacketed pipe subject to external pressure, and substitutes a pneumatic leak test, do the provisions of para. 345.2.4 take precedence over the test pressure prescribed in para. 345.5.4?

Reply (1): Yes.

Question (2): In accordance with ASME B31.3-2002, if an owner considers a hydrostatic leak test impractical, for reasons listed in para. 345.1(b) for jacketed pipe subject to external pressure, and substitutes a pneumatic test, do the provisions of para. 345.2.4 take precedence over the test pressure prescribed in para. 345.5.4?

Reply (2): Yes and see the provisions of para. 345.2.5.

Question (3): In accordance with ASME B31.3-2002, are the requirements of para. 345.2.4 to be applied to hydrostatic leak testing exclusively?

Reply (3): No. See para. 345.2.

Question (4): In accordance with ASME B31.3-2002, if a pipe is to be subjected to a hydrostatic leak test in accordance with para. 345.2.4, must the S_T/S ratio of equation (24) be considered?

Reply (4): No.

Interpretation: 19-31

Subject: ASME B31.3-2002, Para. 300(c)(5), Gas Pressure Reducing Station

Date Issued: May 29, 2003

File: B31-03-00062

Question: In accordance with ASME B31.3-2002, is it required to apply ASME B31.1, para. 122.8.1 for a Gas Pressure Reducing Station that is specified to be designed to B31.3?

Reply: No; however, see para. 300(c)(5).

Interpretation: 19-32

Subject: ASME B31.3-2002, Para. 345.5, Pneumatic Leak Test

Date Issued: May 29, 2003

File: B31-03-00264

Question: Does ASME B31-3-2002 provide procedures for pneumatic testing other than those shown in para. 345.5?

Reply: No.

Copyright ASME International
Provided by IHS under license with ASME
No reproduction or networking permitted without license from IHS Not for Resale

Interpretation: 19-33

Subject: ASME B31.3-2002, Para. 304.3.1(a)(2), Branch Connections

Date Issued: May 29, 2003

File: B31-03-00429

Question (1): In accordance with ASME B31.3-2002, are couplings (socket welded or threaded) permitted for use as branch connections?

Reply (1): Yes. See para. 304.3.1(a)(2).

Question (2): In accordance with ASME B31.3-2002, may couplings used as branch connections be attached using fillet welds?

Reply (2): No. See para. 328.5.4(d).

Interpretation: 19-34

Subject: ASME B31.3-2002, Para. 300.2, Definition of Fluid Service

Date Issued: May 29, 2003

File: B31-03-00437

Question (1): In accordance with ASME B31.3-2002, is it permissible to categorize piping conveying a flammable fluid service as Category D fluid service?

Reply (1): No. See para. 300.2, definition of *fluid service*, subparagraph (a).

Question (2): In accordance with ASME B31.3-2002, do circumferential butt welds made by automatic orbital welding method or any other welding method require NDE in piping containing flammable fluid?

Reply (2): Yes.

Interpretation: 19-35

Subject: ASME B31.3-2002, Table 323.2.2, Requirements for Low Temperature Tests for Metals

Date Issued: May 29, 2003

File: B31-03-00479

Question: Does ASME B31.3-2002 permit fabrication of a piping system with a design minimum temperature of −50°F with filler material in accordance with a specification with a recommended minimum of −20°F?

Reply: Yes, provided the requirements of Table 323.2.2 are satisfied.

Copyright ASME International
Provided by IHS under license with ASME
No reproduction or networking permitted without license from IHS Not for Resale

Interpretation: 19-36

Subject: ASME B31.3-2002, Para. 321.1.4(e), Piping Support Materials

Date Issued: May 29, 2003

File: B31-03-00482

Question: In accordance with ASME B31.3-2002, para. 321.1.4(e), is it required that attachment material welded to the pipe have the same properties and composition as the pipe material?

Reply: No. See para. 321.3.2 for additional requirements for welded attachments and para. 328.5 for welding requirements.

Interpretation: 19-37

Subject: ASME B31.3-2002, Para. 302.3.2(a)(3), Bases for Design Stresses

Date Issued: May 29, 2003

File: B31-03-00694

Question: Does ASME B31.3-2002, para. 302.3.2(a)(3) require, for bolting material whose strength has been enhanced by heat treatment or strain hardening, for temperatures below the creep range, the values of allowable stress for the material in the annealed condition [determined in accordance with paras. 302.3.2(a)(1) and (2)] be used if it is greater than the value for the strain hardened or heat treated bolt determined in accordance with para. 302.3.2(c)(3)?

Reply: Yes.

Interpretation: 19-38

Subject: ASME B31.3-2002, Para. 302.3.2(d), Bases for Design Stresses

Date Issued: May 29, 2003

File: B31-03-00734

Question (1): In accordance with ASME B31.3-2002, for a listed carbon steel material, may the measured tensile strength and measured yield strength as shown in the Material Test Report be used to establish the basic allowable stress values at room temperature per para. 302.3.2, instead of using the basic allowable stress values in Appendix A?

Reply (1): No.

Question (2): In accordance with ASME B31.3-2002, if a material conforms to a listed material and also to a published unlisted material (i.e., dual certified) which has higher specified minimum strengths, may the allowable stresses be determined using para. 323.1.2?

Reply (2): Yes.

Copyright ASME International
Provided by IHS under license with ASME
No reproduction or networking permitted without license from IHS Not for Resale

Interpretation: 19-39

Subject: ASME B31.3-2002, Para. 323.2.2(d), Lower Temperature Limits, Listed Materials

Date Issued: May 29, 2003

File: B31-03-00821

Question (1): In accordance with ASME B31.3-2002, para. 323.2.2(d), may Fig. 323.2.2B be applied to carbon steel materials which have a numerical value listed in the Minimum Temperature column of Table A-1?

Reply (1): Yes.

Question (2): In accordance with ASME B31.3-2002, do the additional requirements in paras. 323.2.2(d)(1)(a) and 323.2.2(d)(1)(b) apply to carbon steel materials covered by para. 323.2.2(a)?

Reply (2): No.

Interpretation: 19-40

Subject: ASME B31.3-2002, Para. 319.3.1(a), Thermal Expansion Data

Date Issued: May 29, 2003

File: B31-03-00829

Question: In accordance with ASME B31.3-2002, does the phrase "maximum metal temperature...for the thermal cycle under analysis" in para. 319.3.1(a) require the use of the design temperature (defined in accordance with para. 301.3) in "determining total displacement strains for computing the stress range" S_E?

Reply: No.

Interpretation: 19-41

Subject: ASME B31.3-2002, Para. 322.6.3, Reference to BPV Section VIII, Division 1, Para. UG-128

Date Issued: May 29, 2003

File: B31-03-00827

Question: In accordance with ASME B31.3-2002, if the appropriate engineering calculations are performed in accordance with para. 300(c)(3) to ensure that a smaller relief device has the capacity to relieve the pressure generated, can a relief device smaller than NPS $\frac{1}{2}$ be used in accordance with para. 322.6.3, considering the reference to the BPV Code Section VIII, Division 1, UG-128?

Reply: Yes, provided the component meets all other requirements of B31.3.

Copyright ASME International
Provided by IHS under license with ASME
No reproduction or networking permitted without license from IHS Not for Resale

Interpretation: 19-42

Subject: ASME B31.3-1996 Edition, Para. 341.4.1(b)(1), Extent of Required Examination

Date Issued: May 29, 2003

File: B31-03-00828

Question (1): In accordance with ASME B31.3-1996 Edition, for a girth or miter groove weld that is visually examined by radiography internally and externally, and then examined, is it required that both the criteria (depth and length) for incomplete penetration in Table 341.3.2 be evaluated for acceptance of the weld?

Reply (1): Yes.

Question (2): In accordance with ASME B31.3-1996 Edition, for a girth or miter groove weld that does not have access to examine the weld internally and is visually acceptable externally, and is examined by radiography, is it required that both the criteria (depth and length) for incomplete penetration in Table 341.3.2 be evaluated for acceptance of the weld?

Reply (2): Yes.

Question (3): In accordance with ASME B31.3-1996 Edition, for a girth or miter groove weld that does not have access to examine the weld internally and is visually acceptable externally, and is examined by radiography, is it acceptable to apply only the criteria for length for incomplete penetration in accordance with Table 341.3.2, for acceptance of the weld?

Reply (3): No, all listed types of weld imperfection must be evaluated.

Question (4): In accordance with ASME B31.3-1996 Edition, for girth or miter groove weld that does not have access to examine the weld internally and is visually acceptable externally, and is examined by radiography, is it acceptable to determine the depth of incomplete penetration in accordance with Table 341.3.2, by density comparison of incomplete penetration to the density of the wall thickness on the radiograph?

Reply (4): The Code does not address the methods for determining the extent of incomplete penetration.

Question (5): In accordance with ASME B31.3-1996 Edition, for a girth or miter groove weld that does not have access to examine the weld internally and is visually acceptable externally, and is examined by radiography, if the depth of the incomplete penetration is indeterminable visually, does the weld meet the requirement for the depth of incomplete penetration?

Reply (5): The Code does not address the methods for determining the extent of incomplete penetration.

Interpretation: 19-43

Subject: ASME B31.3-1999 Edition, Table A-1, Fig. 323.2.2A, Impact Testing

Date Issued: October 9, 2003

File: B31-03-00906

Question: In accordance with ASME B31.3-1999 Edition, does a material with a letter designation in the Minimum Temperature column of Table A-1 require impact testing when the temperature/material thickness combination falls below the curve of Fig. 323.2.2A for the specified letter designation?

Reply: Yes. See para. 323.2.2(c), unless exemptions apply.

Copyright ASME International
Provided by IHS under license with ASME
No reproduction or networking permitted without license from IHS Not for Resale

Interpretation: 19-44

Subject: ASME B31.3-2002, Para. 345.2.5, Leak Test

Date Issued: October 9, 2003

File: B31-03-01343

Question: In accordance with ASME B31.3-2002, when a leak test is applied to jacketed pipe where the leak test is to be based upon a critical external design pressure in accordance with para. 345.2.5(a), is the internal test pressure to be in accordance with para. 345.2.4 regardless of whether the leak test is hydrostatic, pneumatic, or hydrostatic-pneumatic?

Reply: Yes.

Interpretation: 19-45

Subject: ASME B31.3-2002, Para. 318.2.2, Mechanical Interlock

Date Issued: October 9, 2003

File: B31-03-01345

Question: In accordance with ASME B31.3-2002, would a joint in which the mechanical strength is developed by crimping a female part onto a pipe or tube qualify as having a mechanical interlock in accordance with para. 318.2.2?

Reply: Yes.

Interpretation: 19-46

Subject: ASME B31.3-2002, Table A-1, Allowable Stress Values for Carbon Steel Piping

Date Issued: October 9, 2003

File: B31-03-01346

Question: In accordance with ASME B31.3-2002, do Table A-1 allowable stress values for carbon steel piping contain a built-in allowance for loss of tensile strength at temperatures below 204°C (400°F)?

Reply: For the design stress bases, see para. 302.3.

Copyright ASME International
Provided by IHS under license with ASME
No reproduction or networking permitted without license from IHS Not for Resale

Interpretation: 19-47

Subject: ASME B31.3-2002, Para. 323.2.2, Lower Temperature Limits

Date Issued: October 9, 2003

File: B31-03-01347

Question (1): In accordance with ASME B31.3-2002, when using a reduced stress ratio per Fig. 323.2.2B to permit use of non-impact tested materials per para. 323.2.2(d), can the hydrostatic test required by para. 323.2.2(d)(1)(a) be substituted with the pneumatic test as permitted by para. 345.1(b)?

Reply (1): No.

Question (2): In accordance with ASME B31.3-2002, if a material is exempt from impact testing because the requirements of para. 323.2.2(d) are satisfied, are welds and heat affected zones required to be tested per Table 323.2.2, Column A (b)?

Reply (2): No.

Interpretation: 19-48

Subject: ASME B31.3-2002, Paras. 300(c)(3) and 304.7.2, Radiographic Survey Plugs

Date Issued: October 9, 2003

File: B31-03-01455

Question: Does ASME B31.3-2002 permit the use of plugs threaded into the pipe wall, such as might be used for radiographic surveys?

Reply: Yes, provided all of the requirements of ASME B31.3 are met, including the reinforcement requirements of para. 304.3.

Interpretation: 19-49

Subject: ASME B31.3-2002, Paras. 341 and 345, Repair or Replacement of Piping

Date Issued: October 9, 2003

File: B31-03-01441

Question (1): Does ASME B31.3-2002 apply to the repair of piping or piping components which have been placed into service?

Reply (1): No. See para. 300(c)(2).

Question (2): Does ASME B31.3-2002 apply to the replacement of piping or piping components which have been placed into service?

Reply (2): The Code does not address replacement.

Copyright ASME International
Provided by IHS under license with ASME
No reproduction or networking permitted without license from IHS Not for Resale

Copyright ASME International
Provided by IHS under license with ASME
No reproduction or networking permitted without license from IHS
Not for Resale

NUMERICAL INDEX

Code references are based on ASME B31.3-1990 or later Editions. References in brackets are to previous Editions and Addenda.

Reference	Interpretation
Introduction	1-3
	1-6
	1-7
	13-04
300	7-10
	8-17
	19-11
300(b)	1-26
	1-32
	4-08
	5-03
	8-09
	10-11
	13-14
300(c)	3-2
	3-4
	4-10
	6-03R (Vol. 7)
	7-05
	8-30
	13-02
	16-12
	18-09
	19-31
	19-48
300(c) [300(e)]	1-3
	1-6
	1-7
300.1	7-10
	8-17
	9-06
	12-20
300.1.1	1-47
	1-52
	2-26
	3-1
	4-19
	6-01
	8-01
	9-02
	17-01
Fig. 300.1.1	1-8
	1-19
	2-26
	7-10
	8-17
300.1.3 [300.1.4]	1-8
	1-16
	1-19
	1-26
	3-2
	15-09
300.1.3(d)	10-05
300.2	
Category D Fluid Service	4-13
	5-03
	6-01
	19-34
Category M Fluid Service	1-40
	1-73
	6-01
	8-09
	9-02
notch-sensitive	2-22
owner	2-30
piping components	3-2
	8-01
	14-03
	17-23
piping system	1-30
	9-06
severe cyclic conditions	5-12
	8-09
301	5-11
301.2	2-3
	7-01
301.2.1	2-29
	13-15
301.3	2-3
	17-07
301.3.1	10-02
310.3.2	4-11
301.5.3	4-07
301.7.2	3-4
302	1-32
	19-03
302.2	1-50
302.2.1	16-18
302.2.2	17-11
	19-02
302.2.3	19-19
302.2.4 [302.2.3]	1-3
	1-32
	2-14
	3-4
	4-11
	7-01
	7-04
	8-04
	14-09
	17-12
302.2.5	13-15
302.3.2	1-18
	1-38
	2-16
	3-13
	8-25
	11-05
	16-04
	19-37
	19-38
302.3.4	2-20
	17-14
Table 302.3.4	1-42
	1-78
	2-20
	3-11
302.3.5	1-20
	1-50
	2-14
	2-15
	2-24
	3-4
	4-10
	4-12
	6-03R (Vol. 7)
	6-07
	7-04
	7-05
	8-16
	15-15
	16-11
	17-04
	17-18
	18-16
Table 302.3.5	16-10
302.3.6	1-50

Copyright ASME International
Provided by IHS under license with ASME
No reproduction or networking permitted without license from IHS
Not for Resale

Reference	Interpretation
302.3.6 (Cont'd)	
	2-15
	2-16
	2-17
	19-18
302.4	1-20
303	6-05
304.1.1	1-42
	1-54
	1-70
	13-07
	15-06
	15-10
	16-14
304.1.2	1-42
	1-57
	1-68
	1-70
	2-11
	10-20
304.2	15-14
304.2.2	18-06
304.2.3	1-22
	5-11
Fig. 304.2.3	1-22
304.3	1-21
	1-46
	5-01
	6-09
304.3.1	19-33
304.3.2	4-05
304.3.3	4-03
	7-02
	8-06
	8-37
	11-10
	12-05
	14-10
	15-05
	17-26
Fig. 304.3.3	8-37
304.3.4	1-21
	1-37
	1-55
	1-75
	2-27
Fig. 304.3.4	1-70
304.3.5	12-13
304.5	3-4
	9-07
	10-14
	19-12
304.5.1	8-18
304.5.1(b)	9-10
304.7.2	1-51
	3-2
	4-05
	5-05
	5-11
	6-09
	10-7
	10-11
	10-18
	12-09
	13-02
	13-03
	13-05
	13-11
	19-29
304.7.4	1-16
305.2	3-8
	3-9
305.2.1	1-38
305.2.3	6-01
	7-03
306.4	12-16
306.4.2	11-03
308.2.1	5-12
308.2.4	5-12
311.2.4	6-02
	6-05
311.2.5	10-04
312	9-07
314.2.1	2-22
Table 314.2.1	8-33
	11-16
315.2	3-6
315.3	3-6
317.2	1-17
318	8-13
318.2.2	19-45
Table 319.3.6	9-01
319.2.1	2-17
319.2.3	7-04
	7-05
	12-06
	18-13
319.3.1	19-40
319.3.1(b)	15-24
319.3.5	4-10
319.3.6	1-6
	1-7
	1-55
	2-24
	5-15
	13-05
319.4.1	1-33
	13-14
319.4.4	1-71
	2-7
	2-24
319.7	1-16
	7-05
321.1.1	6-07
321.1.4	1-49
	19-36
322.3	17-24
322.6.1	10-10
	12-18
322.6.3	1-32
	2-21
	2-29
	7-01
	12-04
	14-09
323.1	19-28
323.1.1	8-19
	17-09R
	19-41
323.1.2	1-11
	1-15
	1-48
	2-1
	6-06
	8-07
	8-19
	11-03
	15-04
	17-01
	17-08
	19-27
323.2	3-9
323.2.1	1-13
323.2.2	15-12
	15-25
	19-07
	19-21
	19-35
	19-39
	19-47
Fig. 323.2.2	14-08
Table 323.2.2 [Table 323.2.1]	1-12
	1-48
	1-65
	1-76
	2-19
	3-8
	4-01

Copyright ASME International
Provided by IHS under license with ASME
No reproduction or networking permitted without license from IHS Not for Resale

Reference	Interpretation
Table 323.2.2 [Table 323.2.1] (Cont'd)	
	4-15
	14-12
	15-11
	15-16
	18-12
	17-09R
323.2.4	6-06
323.3	1-76
	5-13
323.3.2	11-12
Table 323.3.1 [Table 323.3.2]	1-12
	1-76
	4-17
	5-19
	5-21
	8-29
	10-02
	11-12
	15-23
323.3.4	8-30
323.3.5	2-9
323.4	15-03
323.4.2	10-01
	10-19
Table 323.3.5	5-14
Table 326.1	1-11
	1-51
	2-3
	8-07
	8-34
	19-14
328	7-02
	12-12
328.1	12-07
328.2 [327.5]	1-66
	11-09
	14-13
328.2.1 [327.5.1, 327.5.2]	1-76
	4-17
	8-29
	19-22
328.2.2(g)	14-05
328.2.2(i)	19-26
328.2.3	15-19
	18-08
328.4	13-01
328.4.2 and Fig. 328.4.2	12-10
328.4.3	14-04
Fig. 328.4.4	8-28
	9-08
328.5 [327.4]	5-09
328.5.1 [327.4.1]	5-17
328.5.2 [327.4.2]	5-12
	16-06
	19-20
Fig. 328.5.2 [Fig. 327.4.2]	1-28
	5-12
	6-02
	6-05
	8-27
	15-08
	19-16
328.5.4 [327.4.4]	1-59
	1-74
	2-10
	4-03
	4-14
	7-08
	8-13
	10-04
	13-11
Fig. 328.5.4 [Fig. 327.4.4]	1-59
	1-74
	4-03
	4-16
	7-08
328.6	2-18
330	8-21
330.1	8-23
Table 330.1.1	9-05
331	8-12
331.1.1	8-08
	9-05
	14-01
	19-15
Table 331.1.1 [Table 331.3.1]	1-69
	2-2
	5-06
	8-24
	9-03
	12-14
	14-16
	17-01
331.1.2	8-05
331.1.3 [331.3.6]	1-39
	1-59
	4-06
	5-06
	9-03
	11-06
	14-01
	15-18
	17-13
331.1.3 [331.3.6] (Cont'd)	
	17-21
	18-02
	19-24
331.1.4 [331.1.2]	5-08
331.1.6 [331.3.4]	5-08
	16-09
331.1.7 [331.3.2]	1-78
	8-22
331.2	18-04
331.2.2 [331.1.1]	1-39
	1-78
331.3.4	8-05
331.3.7	8-05
332.1	8-03
	19-04
332.2 [329.1]	1-23
	1-53
	4-02
	8-20
332.2.2	16-08
332.4 [329.3, 330.2]	2-2
	19-04
332.4.2	11-03
	15-17
335.1.1	15-07
	17-25
335.2	2-5
335.2.3	17-20
340.2 [336.1.2]	1-26
340.3 [336.3]	1-10
	10-03
340.4 [336.2]	1-31
	17-15
341	10-16
	15-13
	19-49
341.2 [336.1.1, 336.1.3]	1-10
	1-26
	1-27
	2-28
	10-03
341.3.1 [336.5]	1-64
	2-4
	19-15
341.3.2	8-32
Fig. 341.3.2 [Fig. 327.4.1]	5-09
	13-16
Table 341.3.2	14-02
	14-07
	14-15
	16-07
	17-03

Copyright ASME International
Provided by IHS under license with ASME
No reproduction or networking permitted without license from IHS
Not for Resale

Reference	Interpretation
Table 341.3.2 (Cont'd)	
	17-22
	18-07
[Table 327.4.1A]	1-1
	1-9
	1-14
	1-41
	2-8
	5-04
	5-13
	5-16
	5-17
	5-18
	5-20
	6-04
	7-06
[Table 341.3.2A]	8-32
	8-38
	9-04
	11-08
	11-14
	12-22
	13-16
341.3.3	14-14
341.3.4 [336.5, 336.5.4]	1-62
	2-25
	2-32
	3-5
	3-14
	10-09
	10-12
	11-02
	11-04
	13-12
	16-01
	16-02
	16-05
	18-01
341.4 [336.5]	1-24
	1-45
	3-12
	5-20
	11-01
341.4.1 [336.5.1]	1-10
	1-26
	1-27
	1-60
	2-12
	2-28
	3-7
	3-12
	4-12
	5-10
341.4.1 [336.5.1] (Cont'd)	
	8-02
	8-10
	8-26
	10-03
	10-17
	11-11
	11-14
	11-15
	18-14
	19-05
	19-42
341.4.2	8-38
341.4.3	8-10
341.5	8-38
341.5.1 [336.6.1]	1-5
	3-12
342	15-21
342.1 [336.4.1]	2-28
343 [336.4.1]	2-28
344 [336.4]	5-09
	16-13
	18-11
344.1	13-12
344.2 [336.4.2]	2-28
	8-10
	8-26
	11-11
	15-21
	18-17
344.2.1	19-17
344.5 [336.4.5]	1-10
	1-60
	2-12
344.6 [336.4.6]	1-60
344.6.2	10-17
344.7 [336.4.7]	2-28
	3-14
344.7.1	11-11
345 [337]	1-2
	1-72
345.1 [337.1]	1-4
	1-30
345.1 [337.1] (Cont'd)	
	8-02
	8-10
	8-26
	10-03
	10-17
	11-11
	11-14
	11-15
	18-14
	19-05
	19-42
	8-38
	8-10
	8-38
	1-5
	3-12
	15-21
	2-28
	2-28
	5-09
	16-13
	18-11
	13-12
	2-28
	8-10
	8-26
	11-11
	15-21
	18-17
	19-17
	1-10
	1-60
	2-12
	1-60
	10-17
	2-28
	3-14
	11-11
	1-2
	1-72
	2-31
	3-3
	8-31
	16-03
	17-30
	19-23
	19-30
	19-49
	1-4
	1-30
345.1 [337.1] (Cont'd)	
	4-04
	6-08
	8-15
	12-21
345.2.2	8-31
	18-10
345.2.3(i)	17-28
345.2.4 [337.4.3]	1-35
345.2.5	19-44
345.2.6 [337.1]	1-2
	5-22
	19-23
345.3 [337.3]	2-6
	3-10
	5-02
	12-03
345.4	8-04
	19-25
345.4.1	12-19
345.4.2 [337.4.1]	1-35
	1-61
	1-63
	2-23
	4-04
	9-09
	13-13
	18-03
	19-10
345.4.3 [337.4.2]	1-63
345.5 [337.4.4]	1-35
	1-43
	6-08
	11-07
	13-06
	19-32
345.5.2	11-19
345.5.4	12-02
345.7 [337.5.2]	1-36
345.8 [337.6]	1-25
	3-10
	17-02
	19-06
345.9 [337.5.1]	4-09
	5-07
	6-08
	8-15
	10-15
	12-01
	12-21
	15-02
	17-05
	17-10

Copyright ASME International
Provided by IHS under license with ASME
No reproduction or networking permitted without license from IHS Not for Resale

Reference	Interpretation
345.9 [337.5.1] (Cont'd)	
	18-15
A304	8-14
A304.1.1	14-17
	14-18
A304.5.1	1-67
A304.7.2	13-08
A305	11-17
A314	8-33
A322.6	17-29
A323.4.2	10-06
	11-18
A327.2.4	7-09
A328.2(a)	10-8
A328.2.1	8-14
	18-05
A328.2.5	17-06
A328.5	8-14
	10-08
	13-08
K300(a)	17-16
K304.1.2	11-21
	14-11
K314.2	17-19
K315	7-07
K322.3	7-07
K323.1.2	19-09
K328.2.1(a)	17-27
Fig. K328.5.4	8-37
M305.1	12-15
M307.2	8-35
M322.3	2-13
	3-6
M323.1.3	3-7
M326	2-13
M335.4 [M335.5, M335.6]	3-6
M341.4 [M336.5]	1-24
	1-45
M341.4.1 [M336.5.1]	2-28
	3-7
M345.1	6-08
MA306.5	9-02
MA323.4	9-02
	19-08
MA323.4.2	8-35
Appendix A Notes (no equivalent) [(14)]	2-20
Note (17)	4-18
Note (20) [(30)]	1-77
Note (57) [(2)]	1-58
Appendix A	
Table A-1 [Table 1]	1-13
	1-18
	1-29
	1-38
	1-48
	1-77
	2-1
	3-8
	3-9
	3-13
	4-12
	4-13
	6-01
	6-06
	7-03
	8-11
	8-18
	8-25
	8-34
	8-36
	11-13
	12-09
	15-01
	19-43
	19-46
Table A-1B [Table 1]	1-78
	2-20
	4-18
	7-03
Appendix B	19-13
Appendix D	1-6
	1-7
	1-34
	1-46
	1-55
	1-56
	1-71
	2-7
	2-24
	4-16
	5-01
	5-15
	6-06
	12-08
	12-11
	12-17
	13-05
	18-18
Appendix E [Appendix K]	1-44
	5-10
	19-20
Appendix F [F323.2]	1-29
Appendix G	5-12
Appendix H	8-06
	11-10
Appendix J	1-28
	1-54
	1-75
	5-04
Appendix M	6-01
	8-09
Appendix V	17-17
Appendix X, X3.1.3	12-23
Appendix X, X3.2.2	13-09
Appendix X, X302.2.3	15-22
Case 137	3-1
Case 141	1-51

Copyright ASME International
Provided by IHS under license with ASME
No reproduction or networking permitted without license from IHS Not for Resale

SUBJECT INDEX

Subject	Interpretation
Acceptance Criteria	
pressure tests	1-2
weld	1-1
	1-9
	1-14
	1-41
	2-8
	5-09
	5-13
	5-17
	5-18
	5-20
	6-04
	7-06
	8-32
	12-22
	13-16
	14-02
	14-07
Allowable Loads	14-06
Allowable Stresses	4-12
bases for	1-18
	3-13
	8-11
	8-25
	10-13
	15-01
for ASTM A 312	1-29
for ASTM A 351	11-13
for ASTM A 387	8-25
for ASTM A 570	1-38
for ASTM A 587	1-13
for ASTM A 671	1-48
for ASTM A 464	8-11
for austenitic stainless steels	3-13
for unlisted alloy steel pipe	19-09
Alterations of Piping	13-04
Alternative Tests (see *Leak Tests*)	
Authorized Inspector (see *Owner's Inspector*)	
Bellows	13-09
Bending	4-02
	8-03
	15-17
	16-08
Bends	
corrugated	1-23
miter (see *Miter Bends*)	
reduction of outside diameter	8-20
Bonding Qualification Test	
hot gas welded	8-14
minimum burst pressure	7-09
	8-14
procedure specifications for plastic piping	10-08
requirements	18-05
solvent cement	8-14
Bonds	
heat fusion	8-14
hot gas welded	8-14
test assembly	7-09
Bolting Materials	4-15
	17-20
Branch Connections	
couplings	19-33
extruded outlets	1-37
	2-27
	6-09
flexibility analysis	9-01
integrally reinforced fitting	4-05
	11-10
projection into run pipe	8-28
	9-03
reinforcement	8-06
	8-37
	12-05
	12-13
	14-10
	15-05
weld requirements	2-10
	4-03
	4-14
	7-02
Branch Connections (Cont'd)	
weld requirements (Cont'd)	
	7-08
	10-04
	13-11
	17-26
Brazed Joints	
for flammable service	1-17
Buckles	1-23
	1-53
Cast Irons	
specific requirements	10-01
Category D Fluid Service	
alternative pressure test for	1-36
limitations	4-13
	5-03
radiographic examination	8-38
Category M Fluid Service	
clarification of term	1-73
	9-02
double contained piping	8-35
leak test	6-08
liquid oxygen	8-09
requirements	8-35
	9-02
	12-15
tubing size limitations	2-13
"very small quantity"	1-40
Code Coverage	
B31.3 versus B31.4	1-47
	7-10
fired heaters	15-09
general hydrocarbon service	6-01
in-line sensing devices	8-01
intent	16-12
later editions	19-01
new and replacement piping	5-22
	12-21
	19-49
offshore platform	8-17
oil heating system	4-19

Copyright ASME International
Provided by IHS under license with ASME
No reproduction or networking permitted without license from IHS
Not for Resale

Subject	Interpretation
Code Coverage (Cont'd)	
radioactive fluids	12-20
synfuel plant piping	1-52
	2-26
tobacco plant piping	3-1
Components (see also *Fittings*, *Flanges*, *Standard Components*, *Unlisted*, *and Valves*)	
certification	1-26
	3-7
	5-10
	13-10
defining	17-23
design conditions	2-3
fabricated or flared flaps	11-03
	12-16
in-line sensing devices	8-01
metric size	19-29
referenced standards	1-44
	5-10
Compressors	
internal piping	1-8
Corrugated Bends	1-23
Cyclic Loading	5-12
	17-04
Design (see also *Pressure Design*)	
additional design considerations	12-13
conditions	2-3
for stainless bellows	12-23
Lame theory	1-57
minimum temperature	10-02
Displacement Stress	2-14
	2-24
	12-06
	18-13
Earthquake (see *Seismic*)	
Empty System	
transportation	9-06
Examination	
acceptance criteria	16-07
extent of	1-24
	5-18
	11-01
in-process	3-14
	11-15
liquid penetrant (see *Liquid Penetrant Examination*)	

Subject	Interpretation
Examination (Cont'd)	
progressive (see *Progressive Examination*)	
radiographic (see *Radiographic Examination*)	
random	1-27
	1-45
	1-62
	2-12
	2-32
	4-12
	11-15
records	11-11
required	1-24
	1-60
	6-04
	11-14
	11-15
	15-13
	15-21
	18-14
severe cyclic conditions	10-17
	11-14
spot	1-62
types	16-13
	18-11
visual (see *Visual Examination*)	
ultrasonic (see *Ultrasonic Examination*)	
Exclusions	
for compressors and internal piping	1-8
for interconnecting piping	1-19
listed in scope	10-5
Expansion Joints	1-16
	12-23
	13-09
Extruded Outlet	
pressure design of	1-21
	1-70
tees considered as	1-55
Extruded Welded Tee	5-01
Fatigue	18-09
Fillet Weld	
internal, slip-on flange	8-27
pressure containing	8-13
size	1-74
use	10-4

Subject	Interpretation
Fittings	
B16.9	1-7
	5-01
	19-14
conforming to two grades	8-18
flared, flareless, or compression types	3-6
	12-16
MSS SP-75	1-11
Flammable Service	1-17
Flanges	
assembly	2-5
design	1-67
	3-4
	9-7
general	9-10
long welding neck	4-05
slip-on	5-12
	8-27
use of aluminum	1-51
use of raised and flat face metallic	9-07
Flexibility Analysis	
branch connections	9-01
exemptions from	1-33
qualification	13-05
	13-14
thermal expansion data	15-24
Flexibility Characteristic	
effect of branch to run diameters	1-56
for a tee	1-55
	1-56
	5-01
for components not listed in Appendix D	1-55
	2-24
Flexibility Factors	
basis for	1-56
for B16.9 tee	1-7
	12-08
	12-17
for fabricated intersections	1-6
	4-16
	5-15
for pressure piping components	13-05
for welded elbows	1-6
Fluid Service	
definition	19-34

Copyright ASME International
Provided by IHS under license with ASME
No reproduction or networking permitted without license from IHS
Not for Resale

Subject	Interpretation
Fluid Service (Cont'd)	
general hydrocarbon	6-01
requirements, metallic	11-16
	12-15
	12-16
	15-03
requirements, nonmetallic	11-17
	11-18
responsibility for categorizing	4-08
	8-09
Graphitization	
temperature relative to onset	1-58
Hardness	
limitations on	2-2
records	8-22
testing	15-20
Heat Fusion Joints	13-08
Heat Treatment	
cooling rate	1-69
for austenitic stainless steel	1-65
for bending and forming	2-2
	19-04
for flared laps	11-03
for valve parts	8-12
governing thickness	1-39
	1-59
	4-06
	5-06
	11-06
heating rate	1-69
local	5-08
	8-05
monitoring	5-08
	8-05
requirements	8-08
	8-21
	8-23
	8-24
	9-03
	9-05
	12-14
	14-01
	14-16
	15-18
	18-04
SP-1 through SP-5	8-24
when radiography is required	1-64
when radiography is required (Cont'd)	2-4
Hydrostatic Tests (see *Leak Tests*)	
Impact Tests	
absorbed energy data	2-9
alternative methods	8-30
base metal	4-01
	11-12
	18-12
exclusions from	1-76
	5-14
	8-30
heat treatment required	5-19
in qualifying procedures	8-29
of aluminum filler metals	2-19
of austenitic stainless steel	1-65
of bolting materials	4-15
of the heat-affected zone	1-76
	5-21
of weldments	1-12
	1-65
	1-76
	5-21
	19-21
requirements	15-23
	17-09
temperature limitation	5-14
	8-30
	14-12
	19-07
	19-43
Imperfections (see also *Acceptance Criteria*)	
concave root surface	1-1
	6-04
determination of	8-32
lack of fusion	5-09
porosity	1-9
	5-13
	5-16
	5-20
slag inclusion	5-20
tungsten inclusions	1-9
	5-17
undercutting	1-14
	2-8
	6-04
Installed Piping	1-30
Instrument Piping	7-07
	8-01
Internal Piping, Equipment	1-8
Joint Factors	
for ASTM A 234, ASTM A 312, ASTM A 403	2-20
for branch connections	8-06
for circumferential welds	1-42
for longitudinal and spiral welds	1-78
	3-11
	8-06
	17-14
Joints	
alignment	15-07
	17-25
circumferential bends	5-11
exposed during test	2-6
	3-10
instrument tubing	7-07
special	8-13
tapered pipe thread	16-15
threaded	11-16
	17-19
Lateral Fittings	1-6
Leak Tests	
acceptance criteria	1-2
	15-22
	16-03
alternative	4-09
	5-07
	6-08
	8-15
	12-01
	12-21
	17-05
	17-10
	18-15
as nondestructive examination	8-31
external design pressure	19-44
for Category D fluid service	1-36
for system designed for 0 psi	2-31
isolation of test pump	1-2
leakage	1-4
minimum hydrostatic test pressure	2-23
	4-04

Copyright ASME International
Provided by IHS under license with ASME
No reproduction or networking permitted without license from IHS
Not for Resale

Subject	Interpretation
Leak Tests (Cont'd)	
minor repairs and additions	1-2
of discharge piping	1-72
of newly constructed systems	1-4
	5-02
	5-22
	8-15
of piping and vessel	1-63
of piping connecting equipment	3-3
of replacement piping	5-22
	12-21
painting before test	2-6
	3-10
	5-23
personnel qualification	8-31
pneumatic test	11-07
	11-19
	12-02
	13-06
	19-23
	19-30
	19-32
preparation for	2-6
	3-10
	5-02
	5-23
	12-03
reduced pressure (hydrostatic test)	1-61
	2-23
	13-13
requirements	8-15
	13-13
sensitive	1-25
	17-02
	19-06
	19-23
temperature correction for	1-35
	1-43
test fluid	12-19
test pressure	12-04
	19-10
Lethal Substance	1-73
Limitations	
on hardness	2-2
on imperfections (see *Imperfections*)	
on tubing size	2-13
	3-6
Liquid Penetrant Examination	
requirements	11-14
Low Temperature Requirements (see *Impact Tests*)	
Materials	
API 5L	1-78
	2-4
	3-9
	3-11
	6-01
	6-06
API 5LX	2-4
	11-05
ASTM A234	2-20
ASTM A 312	1-29
	1-77
	2-20
ASTM A 350	19-07
ASTM A 351	11-13
ASTM A 387	8-25
ASTM A 403	1-77
	2-20
ASTM A 487	8-07
ASTM A 537	2-1
ASTM A 570	1-38
ASTM A 587	1-13
ASTM A 633	1-11
ASTM A 658	3-8
ASTM A 671	1-48
ASTM B 241	2-19
ASTM B 337	4-18
ASTM B 464	8-11
austenitic stainless steels	3-13
bases for design stresses	11-05
carbon steel	19-39
certification	5-10
	8-02
	13-10
conforming to two grades	8-18
	8-34
listed	17-09R
	17-11
notch sensitive	2-22
reidentification	8-19
toughness requirements	5-19
traceability	19-28
unlisted material	11-05
	11-20
	15-04
	17-01
	17-08
	19-27
Mechanical Interlock	19-45
Miter Bends	
pressure design of	1-22
	5-11
Near Straight Sawtooth Runs	
explanation of	1-33
Nomenclature	
d	1-54
T	1-28
t_n	1-75
T_W	5-04
	5-16
Nonmetallic Piping	
fluid service requirements	11-17
	11-18
in Category M Fluid Service	8-35
joint requirements	7-09
	8-14
materials	19-08
pressure design	14-17
	14-18
Notch Sensitive	
materials	2-22
Occasional Variations (Pressure/Temperature Allowances)	1-3
	2-14
	4-11
loads	1-50
	2-15
	2-16
	2-17
	19-18
Owner	
responsibilities	1-26
	2-30
	5-22
	19-11
Owner's Inspector	
qualifications of	1-31
responsibilities of	1-26
Pipe	
alterations of existing pipe	13-04
curved and mitered segments	15-14
	18-06

Copyright ASME International
Provided by IHS under license with ASME
No reproduction or networking permitted without license from IHS
Not for Resale

Subject	Interpretation
Pipe (Cont'd)	
elbowless	8-03
in corroded condition	2-15
instrument	17-24
made from plate	1-48
	8-36
of noncircular cross section	3-2
pressure design	13-07
	14-09
pressure testing	9-09
spiral welded	7-03
straight, under internal pressure	10-20
	11-21
	14-11
Pipe Supports	
configurations	6-07
longitudinal stress effects	7-05
materials	19-36
use of plastic	1-49
Plastic	
lined pipe — use of screwed flanges	8-33
pipe supports	1-49
Pneumatic Tests (see *Leak Tests*)	
Positions	
qualification of welding	1-66
Postweld Heat Treatment (see Heat Treatment)	
Preheat (see *Heat Treatment*)	
Pressure Design	
allowance	17-12
for elevated temperatures	3-4
in the high pressure range	1-68
	17-16
of extruded headers	1-21
	1-70
of flanges and blanks	10-14
	13-15
	19-12
of miter bends	1-21
of nonmetallic piping components	14-17
	14-18
of pipe	1-42
	1-54
	1-57
	1-68
Pressure Design (Cont'd)	
of pipe (Cont'd)	
	1-70
	2-11
	11-21
	13-07
	15-06
	15-10
	17-06
of listed components	16-14
	16-18
of unlisted components	13-02
	13-03
	13-05
of valves	8-04
	13-15
Pressure Rating	
components	19-02
valve	8-04
variations	4-11
Pressure Relief Devices	
acceptable devices	2-21
	2-29
	19-41
and test pressure	11-07
	11-19
	12-04
	14-09
	18-03
pressure reducing station	19-31
requirements	17-29
setting	1-32
	7-01
	12-04
stop valves	10-10
	12-18
Pressure Surges	
loads due to	1-50
Pressure-Temperature Rating	5-05
	8-34
Pressure Test (see *Leak Test*)	
Progressive Examination	1-5
	1-62
	3-5
	10-09
	10-10
	10-12
	11-02
Progressive Examination (Cont'd)	
	11-04
	13-12
	16-01
	16-02
	16-05
	18-01
Published Specification	1-15
Radiographic Examination	
100%	5-09
as supplementary examination	8-38
random radiography	1-27
	1-45
	1-62
	2-12
	2-32
	3-12
records	1-10
requirements	6-04
	11-01
	11-05
	12-03
selection of welds for examination	2-25
spot radiography	1-62
	3-12
survey plugs	19-48
when PWHT is required	1-64
	2-4
Records	
certification	5-10
	8-02
	10-03
for radiographic examination	1-10
of examinations	11-11
of hardness tests	8-22
retention of	1-10
Reinforcement, Branch	
attachment weld	4-03
	7-08
clarification of terms	1-37
	11-10
limits of	2-27
	9-04
Repairs	
to welds	2-18
Responsibility	
designer	10-11

Copyright ASME International
Provided by IHS under license with ASME
No reproduction or networking permitted without license from IHS
Not for Resale

Subject	Interpretation
Responsibility (Cont'd)	
rights of owner's inspection	10-03
	17-15
Safeguarding	5-12
Scope (see *Code Coverage*)	
Seismic Loads	4-07
stresses due to	2-17
Severe Cyclic Conditions	
cyclic loading	5-12
large rapid temperature change	8-09
spiral welded pipe	7-03
Simplified Flexibility Analysis	1-33
Standard Components	
manufacturer's markings	3-7
	8-02
valves	5-05
	8-04
	8-07
Standards	
compliance	5-10
superseded	1-44
Stresses (see also *Allowable Stresses*)	
allowable	19-37
	19-38
	19-46
displacement stress range	7-04
	12-06
due to cold spring	8-16
due to occasional loads	2-16
due to pressure surges	1-50
due to seismic loads	2-17
due to sustained loads	15-15
	16-04
	16-11
due to thermal gradients	3-4
hydrostatic design	19-13
longitudinal	1-20
	1-50
	2-15
	2-24
	4-10
	4-12
	6-03R (Vol. 7)

Subject	Interpretation
Stresses (see also *Allowable Stresses*) (Cont'd)	
longitudinal (Cont'd)	
	6-07
	7-05
	8-16
	17-18
	18-16
reduction factors	16-10
Stress Intensification Factors	
application of	1-34
	2-24
	6-03R (Vol. 7)
basis for	1-56
branch connections	2-7
for B16.9 tees	1-7
for fabricated intersections	1-6
	5-15
for tees	1-46
	1-55
	1-71
	5-01
	12-08
	12-17
for unlisted components	13-05
for welded elbows	1-6
	12-11
Temperatures	
allowance	17-12
bending	16-08
design minimum temperature	10-02
	14-08
	14-12
	15-11
	15-16
	17-07
	19-35
large changes	8-09
limitations	4-13
	5-14
	15-12
	15-25
	19-47
maximum metal temperature	19-40
reduction	4-11
verification	16-09
variation in elevated temperature service	17-17

Subject	Interpretation
Thermoplastic Piping	
neat fusion joints	13-08
solvent cemented joints	10-8
specific requirements	10-06
Tubing	
category M fluid service	16-17
joints	7-07
limitations	2-13
	3-6
Thickness Allowances	
governing	17-13
	17-21
	18-02
in stress calculations	1-20
welding tee	18-18
Ultrasonic Examination	
in place of radiography	11-05
requirements	10-17
Unlisted	
components	1-6
	1-51
	3-6
	4-05
	5-05
	8-7
	10-18
	10-07
	10-11
	12-09
	13-02
	13-03
	13-05
	19-03
	19-19
materials (see *Materials*)	
Valves	
Category M Fluid Service	8-35
Flanged Ball Valves	16-16
materials	8-07
	15-26
pressure buildup	8-04
ratings	5-05
Visual Examination	
internal	8-10
	8-26
	13-16
requirements	2-28
	10-03
	13-16

Copyright ASME International
Provided by IHS under license with ASME
No reproduction or networking permitted without license from IHS
Not for Resale

Subject	Interpretation
Visual Examination (Cont'd)	
requirements (Cont'd)	
	18-17
Washers, Use of	2-5
Weld	
acceptable criteria	17-03
	17-22
	18-07
bevels	12-10
configuration	19-16
definition	14-03
	19-05
examination of welds	10-15
	11-01
	11-14
	13-16
	14-14
	14-15
	15-02
	19-17
	19-42
fillet size	1-74
	10-19
	16-06
final	19-15
Weld (Cont'd)	
for branch connections	2-10
	4-03
	4-14
	8-37
	11-10
	19-25
imperfections (see *Acceptable Criteria*)	
longitudinal	2-20
	3-11
	4-18
of valves	12-12
preparation for welding	13-01
	14-04
qualification of position	1-66
reinforcement	7-08
	11-08
repair	2-18
socket	6-02
	6-05
	10-19
	15-08
	16-06
	19-20
spacing of	7-02
Welder Qualification	
by others	15-19
	18-08
	19-26
requirements	17-27
Welding Procedure	
qualification of	1-12
	1-65
	1-66
	1-76
	4-17
	8-23
	8-29
	11-09
	14-05
	14-13
	19-22
responsibility	12-07
	12-12
specification	8-21
	8-22

Copyright ASME International
Provided by IHS under license with ASME
No reproduction or networking permitted without license from IHS Not for Resale

ASME CODE FOR PRESSURE PIPING, B31

Power Piping B31.1-2004
Fuel Gas Piping . . . . . B31.2[1]-1968
Process Piping B31.3-2004
Pipeline Transportation Systems for Liquid Hydrocarbons and Other Liquids B31.4-2002
Refrigeration Piping and Heat Transfer Components B31.5-2001
Gas Transmission and Distribution Piping Systems B31.8-2003
Managing System Integrity of Gas Pipelines B31.8S-2004
Building Services Piping B31.9-1996
Slurry Transportation Piping Systems B31.11-2002
Manual for Determining the Remaining Strength of Corroded Pipelines: A Supplement to ASME B31 Code for Pressure Piping . . . B31G-1991

NOTE:

(1) USAS B31.2-1968 was withdrawn as an American National Standard on February 18, 1988. ASME will continue to make available USAS B31.2-1968 as a historical document for a period of time.

The ASME Publications Catalog shows a complete list of all the Standards published by the Society. For a complimentary catalog, or the latest information about our publications, call 1-800-THE-ASME (1-800-843-2763).

--`,,```,,,,````-`-`,,`,,`,`,,`---

Copyright ASME International
Provided by IHS under license with ASME
No reproduction or networking permitted without license from IHS

Not for Resale

ASME Services

ASME is committed to developing and delivering technical information. At ASME's Information Central, we make every effort to answer your questions and expedite your orders. Our representatives are ready to assist you in the following areas:

ASME Press
Codes & Standards
Credit Card Orders
IMechE Publications
Meetings & Conferences
Member Dues Status
Member Services & Benefits
Other ASME Programs
Payment Inquiries
Professional Development
Short Courses
Publications
Public Information
Self-Study Courses
Shipping Information
Subscriptions/Journals/Magazines
Symposia Volumes
Technical Papers

How can you reach us? It's easier than ever!

There are four options for making inquiries* or placing orders. Simply mail, phone, fax, or E-mail us and an Information Central representative will handle your request.

Mail
ASME
22 Law Drive, Box 2900
Fairfield, New Jersey
07007-2900

Call Toll Free
US & Canada: 800-THE-ASME
(800-843-2763)
Mexico: 95-800-THE-ASME
(95-800-843-2763)
Universal: 973-882-1167

Fax—24 hours
973-882-1717
973-882-5155

E-Mail—24 hours
Infocentral@asme.org

* Information Central staff are not permitted to answer inquiries about the technical content of this code or standard. Information as to whether or not technical inquiries are issued to this code or standard is shown on the copyright page. All technical inquiries must be submitted in writing to the staff secretary. Additional procedures for inquiries may be listed within.

Copyright ASME International
Provided by IHS under license with ASME
No reproduction or networking permitted without license from IHS
Not for Resale

ASME B31.3-2004

ISBN 0-7918-2915-4





A03704

Copyright ASME International
Provided by IHS under license with ASME
No reproduction or networking permitted without license from IHS

Not for Resale