ASME B31.11-2002

(Revision of ASME B31.11-1989)

SLURRY TRANSPORTATION PIPING SYSTEMS

ASME CODE FOR PRESSURE PIPING, B31

AN AMERICAN NATIONAL STANDARD

The American Society of Mechanical Engineers

Copyright ASME International
Provided by IHS under license with ASME
No reproduction or networking permitted without license from IHS

Not for Resale

The American Society of Mechanical Engineers

AN AMERICAN NATIONAL STANDARD

SLURRY TRANSPORTATION PIPING SYSTEMS

ASME B31.11-2002

(Revision of ASME B31.11-1989)

ASME CODE FOR PRESSURE PIPING, B31

Copyright ASME International
Provided by IHS under license with ASME
No reproduction or networking permitted without license from IHS
Not for Resale

Date of Issuance: May 30, 2003

Mandatory Date: November 28, 2003

The next edition of this Standard is scheduled for publication in 2007. There will be no addenda issued to this edition.

ASME issues written replies to inquiries concerning interpretations of technical aspects of this Standard. Interpretations are published on the ASME Web site under the Committee Pages at http://www.asme.org/codes/ as they are issued.

Periodically certain actions of the ASME B31 Committee will be published as Cases. While these Cases do not constitute formal revisions of the Code, they may be used in specifications, or otherwise, as representing considered opinions of the Committee. The Cases are not part of the Code and are published separately.

The user of the Code will note that metric equivalents of U.S. Customary units appear in many places in this Code. The values stated in U.S. Customary units are to be regarded as the standard, unless otherwise agreed between the contracting parties.

ASME is the registered trademark of The American Society of Mechanical Engineers.

This code or standard was developed under procedures accredited as meeting the criteria for American National Standards. The Standards Committee that approved the code or standard was balanced to assure that individuals from competent and concerned interests have had an opportunity to participate. The proposed code or standard was made available for public review and comment that provides an opportunity for additional public input from industry, academia, regulatory agencies, and the public-at-large.

ASME does not "approve," "rate," or "endorse" any item, construction, proprietary device, or activity.

ASME does not take any position with respect to the validity of any patent rights asserted in connection with any items mentioned in this document, and does not undertake to insure anyone utilizing a standard against liability for infringement of any applicable letters patent, nor assumes any such liability. Users of a code or standard are expressly advised that determination of the validity of any such patent rights, and the risk of infringement of such rights, is entirely their own responsibility.

Participation by federal agency representative(s) or person(s) affiliated with industry is not to be interpreted as government or industry endorsement of this code or standard.

ASME accepts responsibility for only those interpretations of this document issued in accordance with the established ASME procedures and policies, which precludes the issuance of interpretations by individuals.

No part of this document may be reproduced in any form,
in an electronic retrieval system or otherwise,
without the prior written permission of the publisher.

The American Society of Mechanical Engineers
Three Park Avenue, New York, NY 10016-5990

Copyright © 2003 by
THE AMERICAN SOCIETY OF MECHANICAL ENGINEERS
All rights reserved
Printed in U.S.A.

Copyright ASME International
Provided by IHS under license with ASME
No reproduction or networking permitted without license from IHS

Not for Resale

CONTENTS

Foreword v
Committee Personnel vi
Introduction viii
Summary of Changes x

Chapter I **Scope and Definitions** 1
1100 General Statements 1

Chapter II **Design** 5
Part 1 **Conditions and Criteria** 5
1101 Design Conditions 5
1102 Design Criteria 6
Part 2 **Pressure Design of Piping Components** 9
1103 Criteria for Pressure Design of Piping Components 9
1104 Pressure Design of Components 9
Part 3 **Design Applications of Piping Components Selection and Limitations** 20
1105 Pipe 20
1106 Fittings, Elbows, Bends, and Intersections 20
1107 Valves 21
1108 Flanges, Blanks, Flange Facings, Gaskets, and Bolting 22
1109 Used Piping Components and Equipment 23
Part 4 **Selection and Limitation of Piping Joints** 23
1111 Welded Joints 23
1112 Flanged Joints 23
1114 Threaded Joints 23
1118 Sleeve, Coupled, and Other Proprietary Joints 23
Part 5 **Expansion, Flexibility, Structural Attachments, Supports, and Restraints** 23
1119 Expansion and Flexibility 23
1120 Loads on Equipment 28
1121 Design of Pipe Supporting Elements 28
Part 6 **Other Specific Piping** 28
1122 Design Requirements 28

Chapter III **Materials** 29
1123 Materials — General Requirements 29
1125 Materials Applied to Miscellaneous Parts 29

Chapter IV **Dimensional Requirements** 32
1126 Dimensional Requirements for Standard and Nonstandard Piping Components 32

Chapter V **Construction, Welding, and Assembly** 34
1134 Construction 34
1135 Assembly of Piping Components 43

Chapter VI **Inspection and Testing** 45
1136 Inspection 45
1137 Testing 46

Copyright ASME International
Provided by IHS under license with ASME
No reproduction or networking permitted without license from IHS
Not for Resale

Chapter VII **Operation and Maintenace Procedures** 49
1150 Operation and Maintenance Procedures Affecting the Safety of Slurry Transportation Piping Systems 49
1151 Pipeline Operation and Maintenance 49
1152 Pump Station, Terminal, and Storage Operation and Maintenance 53
1153 Corrosion-Erosion Control 54
1154 Emergency Plan 54
1155 Records 54
1156 Qualifying a Piping System for a Higher Operating Pressure 54
1157 Abandoning a Piping System 55

Chapter VIII **Corrosion and Erosion Control** 56
1160 General 56
1161 External Corrosion — Buried or Submerged Pipelines 56
1162 External Corrosion — Piping Exposed to Atmosphere 59
1163 Internal Erosion–Corrosion Control 59
1166 Records 60

Mandatory Appendices
I Referenced Standards 61
II Submittal of Technical Inquiries to the B31 Pressure Piping Committee 63

Index 65

Figures
1104.3.1(b)(3) Reinforced Extruded Outlets 13
1104.3.1(c)(1) Welding Details for Opening With Complete Encirclement Types of Reinforcement 15
1104.3.1(c)(2) Welding Details for Openings With Localized Type Reinforcement 16
1104.3.1(c)(3) Welding Details for Openings Without Reinforcement Other Than That in Header and Branch Walls 17
1104.3.1(d)(2) Reinforcement of Branch Connections 18
1119.6.4(c) Flexibility Factor, *k*, and Stress Intensification Factor, *i* 25
1134.8.6(a)-(1) Acceptable Butt Welded Joint Design for Equal Wall Thicknesses 38
1134.8.6(a)-(2) Acceptable Butt Welded Joint Design for Unequal Wall Thicknesses 39
1134.8.6(b) Recommended Attachment Details of Flanges 41
1151.6.2(a)(7) Parameters Used in Analysis of the Strength of Corroded Areas 51

Tables
1102.3.1(a) Tabulation of Examples of Allowable Stresses for Reference Use in Piping Systems Within the Scope of This Code 8
1102.4.3 Weld Joint Factor, *E* 10
1104.3.1(c) Design Criteria for Welded Branch Connections 17
1106.2.1(b) Minimum Radius of Field Cold Bends 20
1123.1 Material and Dimensional Standard 30
1126.1 Dimensional Standards 33
1134.6(a) Minimum Cover for Buried Pipelines 35
1137.6.5 Minimum Number of Test Welds 47
1137.6.6 Minimum Number of Tensile Tests 48

Copyright ASME International
Provided by IHS under license with ASME
No reproduction or networking permitted without license from IHS
Not for Resale

(02)

FOREWORD

The need for a national code for pressure piping became increasingly evident from 1915 to 1925. To meet this need the American Engineering Standards Committee (later changed to the American Standards Association) initiated Project B31 in March 1926 at the request of the American Society of Mechanical Engineers, and with that society as sole sponsor. After several years' work by Sectional Committee B31 and its subcommittees, a first edition was published in 1935 as an American Tentative Standard Code for Pressure Piping.

A revision of the original tentative Standard was begun in 1937. Several more years' effort was given to securing uniformity between sections and to eliminating divergent requirements and discrepancies, as well as to keeping the Code abreast of current developments in welding technique, stress computations, and references to new dimensional and material standards. During this period a new section was added on refrigeration piping, prepared in cooperation with the American Society of Refrigeration Engineers and complementing the American Standard Code for Mechanical Refrigeration. This work culminated in the 1942 American Standard Code for Pressure Piping.

Supplements 1 and 2 of the 1942 Code, which appeared in 1944 and 1947 respectively, introduced new dimensional and material standards, a new formula for pipe wall thickness, and more comprehensive requirements for instrument and control piping. Shortly after the 1942 Code was issued, procedures were established for handling inquiries that require explanation or interpretation of Code requirements, and for publishing such inquiries and answers in *Mechanical Engineering* for the information of all concerned.

Continuing increases in the severity of service conditions, with concurrent developments of new materials and designs equal to meeting higher requirements, had pointed to the need by 1948 for more extensive changes in the Code than could be provided by supplements alone. The decision was reached by the American Standards Association and the sponsor to reorganize the sectional committee and its several subcommittees, and to invite the various interested bodies to reaffirm their representatives or to designate new ones. Following its reorganization, Sectional Committee B31 made an intensive review of the 1942 Code, and a revised Code was approved and published in February 1951 with the designation ASA B31.1-1951, which included

(a) a general revision and extension of requirements to agree with practices current at the time

(b) revision of references to existing dimensional standards and material specifications, and the addition of references to new ones

(c) clarification of ambiguous or conflicting requirements

Supplement No. 1 to B31.1 was approved and published in 1953 as ASA B31.1a-1953. This supplement and other approved revisions were included in a new edition of B31.1 published in 1955 with the designation ASA B31.1-1955.

A review by B31 Executive and Sectional Committees in 1955 resulted in a decision to develop and publish industry sections as separate Code documents of the American Standard B31 Code for Pressure Piping. Shortly thereafter, separate Code documents were prepared for each of the then existing piping systems within the American Standard B31 Code for Pressure Piping.

The American Standards Association was reconstituted as the United States of America Standards Institute in 1966, and as the American National Standards Institute, Inc., in 1969. The B31 Sectional Committee was redesignated as American National Standards Committee B31 Code for Pressure Piping. In December 1978, American National Standards Committee B31 was reorganized as the ASME Code for Pressure Piping B31 Committee, under procedures developed by the American Society of Mechanical Engineers and accredited by ANSI.

By 1977 the technology of slurry pipeline transportation had developed enough to permit the preparation of a Code, and in that year representatives of the slurry pipeline transportation industry asked the B31 Committee to prepare such a Code. The B31 Committee agreed to the request and ANSI/ASME B31.11-1986, Slurry Transportation Piping Systems, was the result of that effort. After approval by the B31 Committee and ASME (the sponsor), that Code was approved by the American National Standards Institute on June 3, 1986.

Following publication of the 1986 edition, the B31.11 Section Committee revised the references to existing dimensional standards and material specifications and added new references. Other clarifying and editorial revisions were made in order to improve the text. These revisions led to the publication of an addenda to B31.11. Addenda "a" to B31.11 was approved and published in 1988 as ANSI/ASME B31.11a-1988.

The 2002 Edition of B31.11 is an inclusion of the previously published addenda into the 1989 Edition along with numerous revisions to the text and updated references. This 2002 Edition was approved by the American National Standards Institute on August 5, 2002 and designated as ASME B31.11-2002.

Copyright ASME International
Provided by IHS under license with ASME
No reproduction or networking permitted without license from IHS
Not for Resale

ASME CODE FOR PRESSURE PIPING, B31

(The following is the Roster of the Committee at the time of approval of this Code.)

OFFICERS

L. E. Hayden, Jr., *Chair*
B. P. Holbrook, *Vice Chair*
P. D. Stumpf, *Secretary*

COMMITTEE PERSONNEL

H. A. Ainsworth, Consultant
R. J. Appleby, Exxon Mobile Upstream Res. Co.
A. E. Beyer, Fluor Daniel, Inc.
K. C. Bodenhamer, Enterprise Products
J. D. Byers, Mobile E & P Technology
J. S. Chin, ANR Pipeline Co.
D. M. Fox, Texas Utilities-Pipeline Services
J. W. Frey, Reliant Energy Co.
D. R. Frikken, Solutia, Inc.
P. H. Gardner, Consultant
R. R. Hoffmann, Federal Energy Regulatory Commission
G. A. Jolly, Edward Vogt Valve Co.
J. M. Kelly, Willbros Engineers, Inc.
W. J. Koves, UOP LLC
K. K. Kyser, Frick York International
J. E. Meyer, Middough Association, Inc.
E. Michalopoulos, General Engineering and Commerical Co.
T. J. O'Grady II, Veco Alaska, Inc.
R. G. Payne, ABB-Combustion Engineering
P. Pertuit III, Black Mesa Pipeline, Inc.
J. T. Powers, Parsons Energy & Chemicals
E. H. Rinaca, Virginia Power Co.
M. J. Rosenfeld, Kiefner & Associates, Inc.
R. J. Silvia, Process Engineers and Constructors, Inc.
W. J. Sperko, Sperko Engineering Services, Inc.
G. W. Spohn III, Coleman Spohn Corp.
R. W. Straiton, Consultant
P. D. Stumpf, The American Society of Mechanical Engineers
A. L. Watkins, The Perry Nuclear Power Plant
R. B. West, State of Iowa, Div. of Labor Services
P. A. Bourquin, *Ex-Officio Member,* Consultant
P. D. Flenner, *Ex-Officio Member,* Consumers Energy Co.
R. W. Haupt, *Ex-Officio Member,* Pressure Piping Engineering Associates, Inc.
W. B. McGehee, *Ex-Officio Member,* Consultant
A. D. Nance, *Ex-Officio Member,* A. D. Nance Associates, Inc.
W. V. Richards, *Ex-Officio Member,* Consultant

B31.4/11 LIQUID AND SLURRY PIPING TRANSPORTATION SYSTEMS SECTION COMMITTEE

K. C. Bodenhamer, *Chair,* Enterprise Products
T. J. O'Grady II, *Vice Chair,* Veco Alaska, Inc.
P. Pertuit III, *Vice Chair,* Black Mesa Pipeline, Inc.
G. E. Moino, *Secretary,* The American Society of Mechanical Engineers
A. E. Beyer, Fluor Daniel, Inc.
J. A. Cox, Retired
R. D. Deaver, Deatech Consulting Co.
F. E. Fischer, Shell Pipeline Company Lp
R. J. Hall, General Physics Corp.
D. M. Harnett, Black Mesa Pipeline
D. B. Kadakia, TD Williamson, Inc.
J. F. Kiefner, Kiefner & Associates, Inc.
R. D. Lewis, H. Rosen USA, Inc.
A. I. MacDonald, Consultant
M. H. Matheson, American Petroleum Institute
W. M. Olson, Gulf Interstate Engineering Co.
S. R. Peterson, Enbridge Energy
J. T. Powers, Parsons Energy & Chemicals
S. W. Russell, Teppco
L. J. Schmitz, Phillips Pipe Line Co.
R. N. Tennille, Tennille Consulting Services
R. D. Turley, Marathon Ashland Petroleum, LLC
D. R. Turner, Consultant
L. W. Ulrich, Retired
G. P. Vinjamuri, U.S. Department of Transportation
M. D. Weston, Bechtel Corp.
T. A. Wicklund, BP Pipelines North America
J. E. Zimmerhanzel, Retired

B31 ADMINISTRATIVE COMMITTEE

L. E. Hayden, Jr., *Chair,* Victaulic Co. of America
B. P. Holbrook, *Vice Chair,* D. B. Riley, Inc.
P. D. Stumpf, *Secretary,* The American Society of Mechanical Engineers
K. C. Bodenhamer, Williams Energy Services
J. D. Byers, Mobil E & P Technology
P. D. Flenner, Consumers Energy Co.
D. M. Fox, Texas Utilities-Pipeline Services
D. R. Frikken, Solutia, Inc.
P. H. Gerner, Consultant
R. R. Hoffmann, Federal Energy Regulatory Commission
G. A. Jolly, Edward Vogt Valve Co.
E. Michalopoulos, General Engineering and Commerical Co.
A. D. Nance, A. D. Nance Associates, Inc.
R. G. Payne, ABB-Combustion Engineering
G. W. Spohn III, Coleman Spohn Corp.
R. B. West, State of Iowa, Div. of Labor Services
P. A. Bourquin, *Ex-Officio Member,* Consultant

Copyright ASME International
Provided by IHS under license with ASME
No reproduction or networking permitted without license from IHS
Not for Resale

R. W. Haupt, *Ex-Officio Member,* Pressure Piping Engineering Associates, Inc.

W. B. McGehee, *Ex-Officio Member,* Consultant
W. V. Richards, *Ex-Officio Member,* Consultant

B31 FABRICATION AND EXAMINATION COMMITTEE

P. D. Flenner, *Chair,*Consumers Energy Co.
P. D. Stumpf, *Secretary,* The American Society of Mechanical Engineers
J. P. Ellenberger, WFI International, Inc.
D. J. Fetzner, Arco Alaska, Inc.
E. Michalopoulos, General Engineering and Commercial Co.
W. G. Scruggs, E. I. du Pont de Nemours & Co.
R. I. Seals, Consultant
R. J. Silvia, Process Engineering & Constructors, Inc.
W. J. Sperko, Sperko Engineering Services, Inc.
E. F. Summers, Jr., Babcock & Wilcox

B31 MATERIALS TECHNICAL COMMITTEE

M. L. Nayyar, *Chair,* Bechtel Power Corp.
G. E. Moino, *Secretary,* The American Society of Mechancial Engineers
M. H. Barnes, Sebesta Blomberg & Associates
R. P. Deubler, Shaw Group/Fronek Co.
C. L. Henley, Black & Veatch
D. W. Rahoi, CCM 2000
R. A. Schmidt, Trinity-Ladish

B31 MECHANICAL DESIGN TECHNICAL COMMITTEE

R. W. Haupt, *Chair,* Pressure Piping Engineering Associates, Inc.
S. J. Rossi, *Secretary,* The American Society of Mechanical Engineers
G. A. Antaki, Westinghouse Savannah River Site
C. Becht IV, Becht Engineering Co.
J. P. Breen, Pressure Sciences, Inc.
J. P. Ellenberger, WFI International, Inc.
D. J. Fetzner, Arco Alaska, Inc.
J. A. Graziano, Tennessee Valley Authority
J. D. Hart, SSD, Inc.
B. P. Holbrook, D. B. Riley, Inc.
W. J. Koves, UOP LLC
G. Mayers, Naval Sea Systems Comm.
T. Q. McCawley, Consultant
E. Michalopoulos, General Engineering and Commercial Co.
J. C. Minichiello, J. C. Minichiello Consulting, Inc.
A. D. Nance, A. D. Nance Associates, Inc.
T. J. O'Grady II, Veco Alaska, Inc.
A. W. Paulin, Paulin Research Group
P. S. Rampone, Hart Design Group
R. A. Robleto, Kellogg Brown & Root, Inc.
M. J. Ronsenfeld, Kiefner & Associates, Inc.
G. Stevick, Berkeley Engineering & Research, Inc.
Q. N. Truong, Kellogg Brown & Root, Inc.
E. A. Wais, Wais and Associates, Inc.
G. E. Woods, Technipusa
E. C. Rodabough, *Honorary Member,* Consultant

B31 CONFERENCE GROUP

T. A. Bell, Pipeline Safety Engineer
G. Bynog, Texas Department of Labor and Standards
R. A. Coomes, State of Kentucky, Department of Housing/Boiler Section
J. W. Greenawalt, Jr., Oklahoma Department of Labor
D. H. Hanrath, North Carolina Department of Labor
C. J. Harvey, Alabama Public Service Commission
D. T. Jagger, Ohio Department of Commerce
M. Kotb, Regie du Batiment du Quebec
K. T. Lau, Alberta Boilers Safety Association
R. G. Marini, New Hampshire Public Utilities Commission
I. W. Mault, Manitoba Department of Labour
A. W. Meiring, Fire and Building Boiler and Pressure Vessel Division
R. F. Mullaney, Boiler and Pressure Vessel Safety Branch
W. A. Owen, North Dakota Public Service Commission
P. Sher, State of Connecticut
M. E. Skarda, State of Arkansas, Department of Labor
D. A. Starr, Nebraska Department of Labor
D. J. Stursma, Iowa Utilities Board
R. P. Sullivan, The National Board of Boiler and Pressure Vessel Inspectors
J. E. Troppman, Division of Labor/State of Colorado Boiler Inspections
C. H. Walters, National Board of Boiler and Pressure Vessel Inspectors
W. A. West, ACI Central
T. F. Wickham, Rhode Island Department of Labor

B31 NATIONAL INTEREST REVIEW GROUP

American Pipe Fitting Association — H. Thielsch
American Society of Heating, Refrigeration and Air Conditioning Engineers — H. R. Kornblum
Chemical Manufacturers Association — D. R. Frikken
Copper Development Association — A. Cohen
Ductile Iron Pipe Research Association — T. F. Stroud
Edison Electric Institute — R. L. Williams
International District Heating Association — G. M. Von Bargen
Manufacturers Standardization Society of the Valve and Fittings Industry — R. A. Schmidt
National Association of Plumbing-Heating-Cooling Contractors — R. E. White
National Certified Pipe Welding Bureau — J. Hansmann
National Fire Protection Association — T. C. Lemoff
National Fluid Power Association — H. G. Anderson
Valve Manufacturers Association — R. A. Handschumacher

Copyright ASME International
Provided by IHS under license with ASME
No reproduction or networking permitted without license from IHS
Not for Resale

INTRODUCTION

The ASME B31 Code for Pressure Piping consists of a number of individually published Sections, each an American National Standard. Hereafter, in this Introduction and in the text of this Code Section B31.11, where the word "Code" is used without specific identification, it means this Code Section.

The Code sets forth engineering requirements deemed necessary for safe design and construction of pressure piping. While safety is the basic consideration, this factor alone will not necessarily govern the final specifications for any piping system. The designer is cautioned that the Code is not a design handbook; it does not do away with the need for the designer or for competent engineering judgment.

To the greatest possible extent, Code requirements for design are stated in terms of basic design principles and formulas. These are supplemented as necessary with specific requirements to assure uniform application of principles and to guide selection and application of piping elements. The Code prohibits designs and practices known to be unsafe and contains warnings where caution, but not prohibition, is warranted.

This Code Section includes

(a) references to acceptable material specifications and component standards, including dimensional requirements and pressure-temperature ratings

(b) requirements for design of components and assemblies, including pipe supports

(c) requirements and data for evaluation and limitation of stresses, reactions, and movements associated with pressure, temperature changes, and other forces

(d) guidance and limitations on the selection and application of materials, components, and joining methods

(e) requirements for the fabrication, assembly, and erection of piping

(f) requirements for examination, inspection, and testing of piping

(g) procedures for operation and maintenance that are essential to public safety

(h) provisions for protecting pipelines from external corrosion and internal corrosion/erosion

It is intended that this Edition of Code Section B31.11 and any subsequent addenda not be retroactive. Unless agreement is specifically made between contracting parties to use another issue, or the regulatory body having jurisdiction imposes the use of another issue, the latest edition and addenda issued at least 6 months prior to the original contract date for the first phase of activity covering a piping system or systems shall be the governing document for all design, materials, fabrication, erection, examination, and testing for the piping until the completion of the work and initial operation.

Users of this Code are cautioned against making use of Code revisions without assurance that they are acceptable to the proper authorities in the jurisdiction where the piping is to be installed.

Code users will note that paragraphs in the Code are not necessarily numbered consecutively. Such discontinuities result from following a common outline, insofar as practicable, for all Code Sections. In this way, corresponding material is correspondingly numbered in most Code Sections, thus facilitating reference by those who have occasion to use more than one Section.

The Code is under the direction of ASME Committee B31, Code for Pressure Piping, which is organized and operates under procedures of The American Society of Mechanical Engineers which have been accredited by the American National Standards Institute. The Committee is a continuing one and keeps all Code Sections current with new developments in materials, construction, and industrial practice. Addenda are issued periodically. New editions are published at intervals of 3 to 5 years.

When no Section of the ASME Code for Pressure Piping specifically covers a piping system, at his discretion the user may select any Section determined to be generally applicable. However, it is cautioned that supplementary requirements to the Section chosen may be necessary to provide for a safe piping system for the intended application. Technical limitations of the various Sections, legal requirements, and possible applicability of other Codes or Standards are some of the factors to be considered by the user in determining the applicability of any Section of this Code.

The Committee has established an orderly procedure to consider requests for interpretation and revision of Code requirements. To receive consideration, inquiries must be in writing and must give full particulars (see the mandatory appendix covering preparation of technical inquiries).

The approved reply to an inquiry will be sent directly to the inquirer. In addition, the question and reply will be published as part of an Interpretation Supplement issued to the applicable Code Section.

A Case is the prescribed form of reply to an inquiry when study indicates that the Code wording needs clarification or when the reply modifies existing requirements of the Code or grants permission to use new

Copyright ASME International
Provided by IHS under license with ASME
No reproduction or networking permitted without license from IHS
Not for Resale

materials or alternative constructions. Proposed Cases are published in *Mechanical Engineering* for public review. In addition, the Case will be published as part of a Case Supplement issued to the applicable Code Section.

A Case is normally issued for a limited period, after which it may be renewed, incorporated in the Code, or allowed to expire if there is no indication of further need for the requirements covered by the Case. However, the provisions of a Case may be used after its expiration or withdrawal, providing the Case was effective on the original contract date or was adopted before completion of the work, and the contracting parties agree to its use.

Materials are listed in the stress tables only when sufficient usage in piping within the scope of the Code has been shown. Materials may be covered by a Case. Requests for listing shall include evidence of satisfactory usage and specific data to permit establishment of allowable stresses, maximum and minimum temperature limits, and other restrictions. Additional criteria can be found in the guidelines for addition of new materials in the ASME Boiler and Pressure Vessel Code, Section II and Section VIII, Division 1, Appendix B. (To develop usage and gain experience, unlisted materials may be used in accordance with para. 1123.1.)

Requests for interpretation and suggestions for revision should be addressed to the Secretary, ASME B31 Committee, Three Park Avenue, New York, NY 10016-5990.

Copyright ASME International
Provided by IHS under license with ASME
No reproduction or networking permitted without license from IHS
Not for Resale

ASME B31.11-2002
SUMMARY OF CHANGES

Following approval by the B31 Committee and ASME, and after public review, ASME B31.11-2002 was approved by the American Standards Institute on August 5, 2002.

ASME B31.11-2002 includes editorial changes, revisions, and corrections introduced in ASME B31.11a-1991, as well as the following changes identified by a margin note **(02)**.

Page	*Location*	*Change*
vi	Foreword	(1) Editorially revised (2) Last paragraph added
1	1100(f)	Last sentence revised
	1100.1.1	First paragraph revised
2	Fig. 1100.1.1	Deleted
	1100.1.2(d)	Revised
	1100.2	Revised
6	1102.3.1(a)	Equation revised
7–9	Table 1102.3.1(a)	(1) Spec. No. ASTM A 333 added under Seamless and Electric Resistance Welded and Electric Flash Welded (2) Spec. No. API 5LU deleted under Seamless and Electric Resistance Welded and Electric Flash Welded (3) Spec. No. API 5L added under Submerged Arc Weld (4) API 5LU deleted from under Submerged Arc Weld
	1102.3.2(e)	Deleted
	1102.4.2	Second line revised
	1102.4.4	Last line editorially revised
	1104.1.1(a)	References to Eq. (1) deleted
11, 12	1104.1.1(b)	Nomenclature for A and P_i revised
	1104.1.2	References to Eq. (2) deleted
	1104.2.2(b)	Revised
	1104.3.1(a)(2)	Revised
	1104.3.1(b)(4)	Nomenclature for t_b and t_h revised
19	1104.5.1(b), (d)	References to B16.5 revised
	1104.6(a)	References to B16.5 and B16.9 revised
20, 21	1105.2.1(a)	Reference to Eq. (2) deleted
	1106.1.1(a), (b)	References to B16.5, B16.9, and B16.28 revised
	1106.4.1	References to B16.5 and B16.9 revised

Copyright ASME International
Provided by IHS under license with ASME
No reproduction or networking permitted without license from IHS
Not for Resale

Page	*Location*	*Change*
20,21	1106.6.1	Second paragraph revised
22	1108.1.1(b), (d)	References to B16.5 revised
	1108.3.1(a)	References to B16.5 and B16.1 revised
	1108.4.2	References to B16.5, B16.20, and Class 150 revised
	1108.5.1	References to Classes 150 and 300 revised
	1108.5.2	Reference to B16.5 revised
	1108.5.4	Revised
23	1114.1	References to B1.20.1 and B36.10M revised
25, 26	Fig. 1119.6.4(c)	(1) Description for Extruded Welding Tee added (2) Figure notes revised in their entirety
30, 31	Table 1123.1	Revised in its entirety
33	Table 1126.1	(1) Entry for Ultra-High-Test Heat-Treated Line Pipe deleted (2) General Note revised
40	1134.13.4(b)	First sentence revised
41	Fig. 1134.8.6(b)	Subcaptions (3) and (4) revised
43	1134.21.3	First sentence revised
47	1137.6.2(a)	Last sentence revised
49, 50	1150.2(h)	Revised
	1151.1(d)	Added
	1151.6.1	Second sentence revised
	1151.6.2(c)(1)	First sentence revised
52	1151.7(b)	Revised in its entirety
53	1151.9	Subparagraphs (a) and (b) revised
55	1157	Revised in its entirety
58	1161.1.6(b)	Second sentence added
61, 62	Appendix I	Revised in its entirety
63, 64	Appendix II	Revised in its entirety
66, 69	Index	(1) Under *Flanges*, subentries for *bolting specifications* and *specifications* revised (2) Entry for *Standards and specifications* revised

Copyright ASME International
Provided by IHS under license with ASME
No reproduction or networking permitted without license from IHS
Not for Resale

Copyright ASME International
Provided by IHS under license with ASME
No reproduction or networking permitted without license from IHS
Not for Resale

SLURRY TRANSPORTATION PIPING SYSTEMS

CHAPTER I
SCOPE AND DEFINITIONS

(02) 1100 GENERAL STATEMENTS

(a) This Slurry Transportation Piping Systems Code is one of several sections of the ASME B31 Code for Pressure Piping. This Section is published as a separate document for convenience.

(b) The requirements of this Code are adequate for safety under conditions normally encountered in the movement of slurry by pipelines. Requirements for all abnormal or unusual conditions are not specifically provided for, nor are all details of engineering and construction prescribed. All work performed within the Scope of this Code shall comply with the safety standards expressed or implied.

(c) The primary purpose of this Code is to establish requirements for safe design, construction, inspection, testing, operation, and maintenance of slurry transportation piping systems for protection of the general public and operating company personnel, as well as for reasonable protection of the piping system against vandalism and accidental damage by others, and reasonable protection of the environment.

(d) This Code is concerned with employee safety to the extent that it is affected by basic design, quality of materials and workmanship, and requirements for construction, inspection, testing, operation, and maintenance of slurry transportation piping systems. Existing industrial safety regulations pertaining to work areas, safe work practices, and safety devices are not intended to be supplanted by this Code.

(e) The designer is cautioned that the Code is not a design handbook. The Code does not do away with the need for the engineer or competent engineering judgment. The specific design requirements of the Code usually revolve around a simplified engineering approach to a subject. It is intended that a designer capable of applying more complete and rigorous analysis to special or unusual problems shall have latitude in the development of such designs and the evaluation of complex or combined stresses. In such cases, the designer is responsible for demonstrating the validity of his approach.

(f) This Code shall not be retroactive, i.e., construed as applying to slurry piping systems installed before the date of issuance shown on the document title page, insofar as design, materials, construction, assembly, inspection, and testing are concerned. It is intended, however, that the provisions of this Code shall be applicable, within 6 months after date of issuance, to the relocation, replacement, conversion, and uprating or other changes in the existing piping systems; and to the operation, maintenance, and corrosion control of new or existing piping systems. After Code revisions are approved by ASME and ANSI, they may be used by agreement between contracting parties beginning with the date of issuance. Revisions become mandatory requirements for new installations 6 months after the date of issuance, except for piping installations or components contracted for or under construction prior to the end of the 6 month period.

(g) The users of this Code are advised that in some areas legislation may establish governmental jurisdiction over the subject matter covered by this Code. Users are cautioned against making use of revisions that are less restrictive than former requirements without having assurance that they have been accepted by the proper authorities in the jurisdiction where the piping is to be installed.

1100.1 Scope

1100.1.1 Rules for this Code section have been developed considering the needs for applications, which include piping transporting aqueous slurries between plants and terminals and within terminals, pumping and regulating stations. This Code prescribes requirements for the design, materials, construction, assembly, inspection, testing, operation, and maintenance of piping transporting aqueous slurries of nonhazardous materials, such as coal, mineral ores, concentrates, and other solid materials. (02)

Piping consists of pipe, flanges, bolting, gaskets, valves, relief devices, fittings, and the pressure containing parts of other piping components. It also includes hangers and supports, and other equipment items necessary to prevent overstressing the pressure containing parts. It does not include support structures such as frames of buildings, stanchions, or foundations,

Copyright ASME International
Provided by IHS under license with ASME
No reproduction or networking permitted without license from IHS
Not for Resale

or any equipment such as defined in para. 1100.1.2(b).

Also included within the scope of this Code are

(a) primary and auxiliary slurry piping at storage facilities, pipeline terminals, pump stations, and pressure reducing stations, including piping up to the first valve of attached auxiliary water lines

(b) slurry piping, storage facilities, and other equipment located on property which has been set aside for the slurry transportation system

(c) those aspects of operation and maintenance of slurry transportation piping systems relating to the safety and protection of the general public, operating company personnel, environment, property, and the piping systems [see paras. 1100(c) and (d)].

(02) **1100.1.2** This Code does not apply to:

(a) auxiliary piping, such as for water, air, steam, lubricating oil, gas, and fuel

(b) pressure vessels, heat exchangers, pumps, meters, and other such equipment including internal piping and connections for piping

(c) piping designed for internal pressures

(1) at or below 15 psig [103 kPa (gage)] regardless of temperature

(2) above 15 psig [103 kPa (gage)] if design temperature is below −20°F (−30°C) or above 250°F (120°C)

(d) piping within the battery limits of slurry processing plants and other non-storage facilities

(e) the design and fabrication of proprietary items of equipment, apparatus, or instruments

(02) 1100.2 Definitions

Some of the terms commonly used in the Code are defined below.[1]

accidental loads: any unplanned load or combination of unplanned loads caused by human intervention or natural phenomena.

breakaway coupling: a component installed in the pipeline to allow the pipeline to separate when a predetermined axial load is applied to the coupling.

buckle: a condition where the pipeline has undergone sufficient plastic deformation to cause permanent wrinkling in the pipe wall or excessive cross-sectional deformation caused by loads acting alone or in combination with hydrostatic pressure.

cast iron: a generic term for the family of high carbon-silicon-iron casting alloys including gray iron, white iron, malleable iron, and ductile iron.

cold springing: deliberate deflection of piping, within its yield strength, to compensate for anticipated thermal expansion.

column buckling: buckling of a beam or pipe under compressive axial load in which loads cause unstable lateral deflection, also referred to as upheaval buckling.

connectors: component, except flanges, used for the purpose of mechanically joining two sections of pipe.

corrosion: the deterioration of a material, usually a metal, by reaction with its environment.

defect: an imperfection of sufficient magnitude to warrant rejection.

ductile iron: a gray iron base metal to which an innoculant is added to the molten state so that upon solidification, the graphite is present in the form of spheres or nodules randomly distributed in a matrix of ferrite. A minimum tensile strength of 60,000 psi (207 MPa) is required.

engineering design: the detailed design developed from operating requirements and conforming to Code requirements, including all necessary drawings and specifications, governing a piping installation.

erosion: destruction of materials by the abrasive action of moving fluids, usually accelerated by the presence of solid particles.

erosion corrosion: a corrosion reaction accelerated by the relative movement of the corrosive fluid and the metal surface.

general corrosion: uniform or gradually varying loss of wall thickness over an area.

girth weld: a complete circumferential butt weld joining pipe or components.

imperfection: a discontinuity or irregularity that is detected by inspection.

internal design pressure: internal pressure used in calculations or analysis for pressure design of a piping component.

malleable iron: a cast iron which, after being cast as white iron, is converted by heat treatment into matrix of ferrite containing randomly distributed particles of temper carbon and substantially free from all combined carbon. A minimum tensile strength of 50,000 psi (345 MPa) is required.

maximum steady state operating pressure: maximum pressure (sum of static head pressure, pressure required to overcome friction losses, and any back pressure) at any point in a piping system when the system is operating under steady state conditions.

miter: two or more straight sections of pipe matched and joined on a line bisecting the angle of junction so as to produce a change in direction.

nominal pipe size (NPS): see ASME B36.10M p. 1 for definition.

operating company: owner or agent currently responsible for the design, construction, inspection, testing, operation, and maintenance of the piping system.

[1] Welding terms that agree with AWS Standard A3.0 are marked with an asterisk (*). For welding terms used in this Code but not shown here, definitions in accordance with AWS A3.0 apply.

Copyright ASME International
Provided by IHS under license with ASME
No reproduction or networking permitted without license from IHS
Not for Resale

pipe: a tube, usually cylindrical, used for conveying a fluid or transmitting fluid pressure, normally designated "pipe" in the applicable specification. It also includes any similar component designated "tubing" used for the same purpose. Types of pipe, according to the method of manufacture, are defined as follows:

(a) double submerged arc welded pipe: pipe having a longitudinal or spiral butt joint produced by at least two passes, one of which is on the inside of the pipe. Coalescence is produced by heating with an electric arc or arcs between the bare metal electrode, or electrodes, and the work. The welding is shielded by a blanket of granular, fusible material on the work. Pressure is not used, and filler metal for the inside and outside welds is obtained from the electrode or electrodes.

(b) electric fusion welded pipe: pipe having a longitudinal or spiral butt joint wherein coalescence is produced in the preformed tube by manual or automatic electric arc welding. The weld may be single or double and may be made with or without the use of filler metal. Spiral welded pipe is also made by the electric fusion welded process with either a lap joint or a lockseam joint.

(c) electric induction welded pipe: pipe, produced in individual lengths or in continuous lengths from coiled skelp, having a longitudinal or spiral butt joint wherein coalescence is produced by the heat obtained from resistance of the pipe to induced electric current and by application of pressure.

(d) electric resistance welded pipe: pipe produced in individual lengths or in continuous lengths from coiled skelp, having a longitudinal or spiral butt joint wherein coalescence is produced by the heat obtained from resistance of the pipe to the flow of electric current in a circuit of which the pipe is a part, and by the application of pressure.

(e) furnace butt welded pipe, continuous welded pipe: pipe produced in continuous lengths from coiled skelp and subsequently cut into individual lengths, having its longitudinal butt joint forge welded by the mechanical pressure developed in rolling the hot formed skelp through a set of round pass welding rolls.

(f) seamless pipe: pipe produced by piercing a billet followed by rolling or drawing or both.

pipe nominal wall thickness: the wall thickness listed in applicable pipe specifications or dimensional standards included in this Code by reference. The listed wall thickness dimension is subject to tolerances as given in the specification or standard.

pipe supporting elements: pipe supporting elements consist of fixtures and structural attachments as follows:

(a) fixtures: fixtures include elements which transfer the load from the pipe or structural attachment to the supporting structure or equipment. They include hanging rods, spring hangers, sway braces, counterweights, turnbuckles, struts, chains, guides, and anchors, and bearing type fixtures, such as saddles, bases, rollers, brackets, and sliding supports.

(b) structural attachments: structural attachments include elements which are welded, bolted, or clamped to the pipe, such as clips, lugs, rings, clamps, clevises, straps, and skirts.

pressure: unless otherwise stated, pressure is expressed in pounds per square inch above atmospheric pressure, i.e., gage pressure (psig) and the equivalent SI units.

shall: "shall" or "shall not" is used to indicate that a provision is mandatory.

should: "should" or "may" or "it is recommended" is used to indicate that a provision is not mandatory but is recommended as good practice.

slurry: a two-phase mixture of solid particles in an aqueous phase.

soil liquefaction: a soil condition, typically caused by dynamic cyclic loading (e.g., earthquake, waves) where the effective shear strength of the soil is reduced such that the soil exhibits the properties of a liquid.

span: a section of pipe that is unsupported.

weight coating: any coating applied to the pipeline for the purpose of increasing the pipeline specific gravity.

arc welding:* a group of welding processes wherein coalescence is produced by heating with an electric arc or arcs, with or without the application of pressure, and with or without the use of filler metal.

automatic welding:* welding with equipment which performs the entire welding operation without constant observation and adjustment of the controls by an operator. The equipment may or may not perform the loading and unloading of the work.

fillet weld:* a weld of approximately triangular cross section joining two surfaces approximately at right angles to each other in a lap joint, tee joint, or corner joint.

full fillet weld:* a fillet weld the size of which is equal to the thickness of the thinner member joined.

gas welding:* a group of welding processes wherein coalescence is produced by heating with a gas flame or flames, with or without the application of pressure, and with or without the use of filler metal.

gas metal arc welding:* an arc welding process wherein coalescence is produced by heating with an electric arc between a filler metal (consumable) electrode and the work. Shielding is obtained from a gas, a gas mixture (which may contain an inert gas), or a mixture of a gas and a flux. (This process has sometimes been called "Mig welding" or "CO_2 welding.")

gas tungsten arc welding:* an arc welding process wherein coalescence is produced by heating with an electric arc between a single tungsten (nonconsumable) electrode and the work. Shielding is obtained from a gas or gas

Copyright ASME International
Provided by IHS under license with ASME
No reproduction or networking permitted without license from IHS
Not for Resale

mixture (which may contain an inert gas). Pressure may or may not be used, and filler metal may or may not be used. (This process has sometimes been called "Tig welding.")

*semiautomatic arc welding**: arc welding with equipment that controls only the filler metal feed. The advance of the welding is manually controlled.

*shielded metal arc welding**: an arc welding process wherein coalescence is produced by heating with an electric arc between a covered metal electrode and the work. Shielding is obtained from decomposition of the electrode covering. Pressure is not used, and filler metal is obtained from the electrode.

*submerged arc welding**: an arc welding process wherein coalescence is produced by heating with an electric arc or arcs between a bare metal electrode or electrodes and the work. The welding is shielded by a blanket of granular, fusible material on the work. Pressure is not used, and filler metal is obtained from the electrode and sometimes from a supplementary welding rod.

*tack weld**: a weld made to hold parts of a weldment in proper alignment until subsequent welds are made.

*weld**: a localized coalescence of metal wherein coalescence is produced by heating to suitable temperatures, with or without the application of pressure, and with or without the use of filler metal. The filler metal shall have a melting point approximately the same as the base metal.

*welder**: one who is capable of performing a manual or semiautomatic welding operation.

*welder operator**: one who operates machines or automatic welding equipment.

*welding procedures**: the detailed methods and practices, including joint welding procedures, involved in the production of a weldment.

Copyright ASME International
Provided by IHS under license with ASME
No reproduction or networking permitted without license from IHS
Not for Resale

CHAPTER II
DESIGN

PART 1
CONDITIONS AND CRITERIA

1101 DESIGN CONDITIONS

1101.1 General

Paragraph 1101 defines the pressures, temperatures, and various forces applicable to the design of slurry transportation piping systems. It also takes into account considerations that shall be given to ambient and mechanical influences and various loadings.

1101.2 Pressure

1101.2.1 Maximum Steady State Operating Pressure. The maximum steady state operating pressure shall be the sum of the static head pressure, pressure to overcome friction losses, and any back pressure. Pressure rise above maximum steady state operating pressure due to surges and other variations from normal operations is allowed in accordance with para. 1102.2.4.

1101.2.2 Internal Design Pressure. The piping component at any point in the piping system shall be designed for an internal design pressure that shall not be less than the maximum steady state operating pressure at that point and not less than the static head pressure at that point with the line in a static condition (see para. 1104.1.2). Credit may be given, in the appropriate manner, for hydrostatic external pressure in modifying the internal design pressure for use in calculations involving the pressure design of piping components (see para. 1104.1.3).

1101.2.3 External Design Pressure. The piping component shall be designed to withstand the maximum possible differential between external and internal pressures to which the component will be exposed.

1101.3 Temperature

1101.3.1 Design Temperature Range. The design temperature range is the range of the material temperature expected at the pressure boundary wall during normal operation. Engineers are cautioned to give attention to low temperature material properties and the potential freezing of the aqueous slurry.

1101.4 Ambient Influences

1101.4.1 Fluid Expansion Effects. Provision shall be made in the design to prevent, withstand, or relieve excessive pressure caused by the heating of static fluid in a pipeline component.

1101.4.2 Fluid Freeze. Consideration in the design shall be given to the possibility of freezing of fluid in a piping component.

1101.5 Dynamic Effects

1101.5.1 Impact. Impact forces caused by either external or internal conditions shall be considered in the design of piping systems.

1101.5.2 Wind. The effect of wind loading shall be provided for in the design of suspended piping.

1101.5.3 Earthquake. Consideration in the design shall be given to piping systems located in regions where earthquakes are known to occur.

1101.5.4 Vibration. Stress resulting from vibration or resonance shall be considered and provided for in accordance with accepted engineering practice.

1101.5.5 Subsidence. Consideration in the design shall be given to piping systems located in regions where subsidence is known to occur.

1101.5.6 Waves and Currents. The effects of waves and currents shall be provided for in the design of pipelines across waterways and offshore.

1101.6 Weight Effects

The following weight effects combined with loads and forces from other causes shall be taken into account in the design of piping that is exposed, suspended, or not supported continuously.

1101.6.1 Live Loads. Live loads include the weight of the slurry transported and any other extraneous materials, such as ice or snow, that adhere to the pipe. The impact of wind, waves, and currents are also considered live loads.

1101.6.2 Dead Loads. Dead loads include the weight of the pipe, components, coating, backfill, and unsupported attachments to the piping.

1101.7 Thermal Expansion and Contraction Loads

Provisions shall be made for the effects of thermal expansion and contraction in all piping systems.

Copyright ASME International
Provided by IHS under license with ASME
No reproduction or networking permitted without license from IHS
Not for Resale

1101.8 Relative Movement of Connected Components

The effect of relative movement of connected components shall be taken into account in the design of piping and pipe supporting elements.

1101.9 Potential Slurry Erosion-Corrosion

The effects of potential slurry erosion-corrosion shall be considered in the design of piping, piping components, and ancillary equipment (see para. 1163).

1101.10 Other Design Considerations

The designer should consider that the combination of solids and liquids present in slurry pipelines may require design criteria differing from those applicable to liquid or gas pipelines. These criteria include, but are not limited to, the following: pipeline slope limitations, pressure effects of density differential, equipment malfunction due to solids accumulation, and shutdown/restart effects.

1102 DESIGN CRITERIA

1102.1 General

Paragraph 1102 pertains to ratings, stress criteria, design allowances, and minimum design values, and formulates the permissible variations of these factors used in the design of slurry transportation piping systems within the scope of this Code.

The design requirements of this Code are adequate for public safety under conditions usually encountered in slurry transportation piping systems within the scope of this Code, including lines within villages, towns, cities, and industrial areas. However, the design engineer shall provide reasonable protection to prevent damage to the pipeline from unusual external conditions which may be encountered in river crossings, offshore and inland coastal water areas, bridges, areas of heavy traffic, long self-supported spans, unstable ground, vibration, seismic disturbances, weight of special attachments, or forces resulting from abnormal thermal conditions. Some of the protective measures which the design engineer may provide are encasing with steel pipe of larger diameter, adding concrete protective coating, increasing the wall thickness, lowering the line to a greater depth, or indicating the presence of the line with additional markers.

1102.2 Pressure-Temperature Ratings for Piping Components

1102.2.1 Components Having Specific Ratings. Within the temperature limits of −20°F (−30°C) to 250°F (120°C), pressure ratings for piping components shall conform to those stated for 100°F (40°C) in the standards listed in Table 1123.1. The nonmetallic components shall be made of materials which are compatible with the slurry in the piping system and shall be capable of withstanding the pressures and temperatures to which they will be subjected in service.

1102.2.2 Components Not Having Specific Ratings. Piping components not having established pressure ratings may be qualified for use as specified in paras. 1104.7 and 1123.1(b).

1102.2.3 Ratings: Normal Operating Conditions. For normal operation, the maximum steady state operating pressure shall not exceed the pressure-temperature ratings of the components used.

1102.2.4 Allowance for Variations From Normal Operations. Surge pressures in a slurry pipeline are produced by change in the velocity of the moving stream that results from shutting down of a pump station or pumping unit, closing of a valve, or blockage of the moving stream.

Surge pressure attenuates (decreases in intensity) as it moves away from its point of origin.

Surge calculations shall be made, and adequate controls and protective equipment shall be provided, so that the level of pressure rise due to surges and other variations from normal operations shall not exceed by more than 10% the internal design pressure at any point in the piping system and equipment.

1102.2.5 Ratings: Considerations for Different Pressure Conditions. When two lines that operate at different pressure conditions are connected, the valve segregating the two lines shall be rated for the more severe service condition. When a line is connected to a piece of equipment which operates at a higher pressure condition than that of the line, the valve segregating the line from the equipment shall be rated for at least the operating condition of the equipment. The piping between the more severe conditions and the valve shall be designed to withstand the operating conditions of the equipment or piping to which it is connected.

1102.3 Allowable Stress Values and Other Stress Limits

1102.3.1 Allowable Stress Values (02)

(a) The allowable stress value S to be used for design calculations in para. 1104.1.2 for new pipe of known specification shall be established as follows:

S = 0.80 E × specified minimum yield strength of the pipe, psi (MPa)

where

0.80 = design factor based on nominal wall thickness. In setting the design factor, due consideration has been given to, and allowance has been made for, the various underthickness and defect tolerances provided for in the specifications approved by the Code.

Copyright ASME International
Provided by IHS under license with ASME
No reproduction or networking permitted without license from IHS
Not for Resale

E = weld joint factor (see para. 1102.4.3 and Table 1102.4.3)

Table 1102.3.1(a) is a tabulation of examples of allowable stresses for reference use in slurry transportation piping systems.

(b) The allowable stress value S to be used for design calculations in para. 1104.1.2 for used (reclaimed) pipe of known specifications shall be in accordance with (a) above and the limitations in para. 1105.2.1(b).

(c) The allowable stress value S to be used for design calculations in para. 1104.1.2 for new or used (reclaimed) pipe of unknown, or ASTM A 120, specification shall be established in accordance with the limitations in para. 1105.2.1(c) and the following:

S = 0.80 E × minimum yield strength of the pipe, psi (MPa) [24,000 psi (165 MPa) or yield strength determined in accordance with paras. 1137.6.6 and 1137.6.7]

where

0.80 = design factor based on nominal wall thickness. In setting the design factor, due consideration has been given to, and allowance has been made for, the various underthickness and defect tolerances provided for in the specifications approved by the Code.

E = weld joint factor (see Table 1102.4.3)

(d) The allowable stress value S, to be used for design calculations in para. 1104.1.2 for pipe which has been cold worked in order to meet the specified minimum yield strength and is subsequently heated to 600°F (300°C) or higher (welding excepted), shall be 75% of the applicable allowable stress value as determined by para. 1102.3.1(a), (b), or (c).

(e) Allowable stress values in shear shall not exceed 45% of the specified minimum yield strength of the pipe, and allowable stress values in bearing shall not exceed 90% of the specified minimum yield strength of the pipe.

(f) Allowable tensile and compressive stress values for materials used in structural supports and restraints shall not exceed 66% of the specified minimum yield strength. Allowable stress values in shear and bearing shall not exceed 45% or 90% of the specified minimum yield strength, respectively. Steel materials of unknown specifications may be used for structural supports and restraints, provided a yield strength of 24,000 psi (165 MPa) or less is used.

(g) In no case where the Code refers to the specified minimum value of a mechanical property shall a higher value of the property be used in establishing the allowable stress value.

(02) **1102.3.2 Limits of Calculated Stresses Due to Sustained Loads and Thermal Expansion**

(a) Internal Pressure Stresses. The calculated stresses due to internal pressure shall not exceed the applicable allowable stress value S determined by para. 1102.3.1(a), (b), (c), or (d), except as permitted by other subparagraphs of para. 1102.3.

(b) External Pressure Stresses. Stresses due to external pressure shall be considered safe when the wall thickness of the piping components meets the requirements of paras. 1103 and 1104.

(c) Allowable Expansion Stresses. The allowable stress values for the equivalent tensile stress in para. 1119.6.4(b) for restrained lines shall not exceed 90% of the specified minimum yield strength of the pipe. The allowable stress range S_A in para. 1119.6.4(c) for unrestrained lines shall not exceed 72% of the specified minimum yield strength of the pipe.

(d) Additive Longitudinal Stresses. The sum of the longitudinal stresses due to pressure, weight, and other sustained external loadings [see para. 1119.6.4(c)] shall not exceed 75% of the allowable stress value specified for S_A in 1102.3.2(c). The thickness of pipe used in calculating longitudinal stresses shall not include allowances covered in paras. 1102.4.1 and 1102.4.2.

1102.3.3 Limits of Calculated Stresses Due to Occasional Loads

(a) Operation. The sum of the longitudinal stresses produced by pressure, live and dead loads, and those produced by occasional loads, such as wind or earthquake, shall not exceed 88% of the specified minimum yield strength of the pipe. It is not necessary to consider wind and earthquake as occurring concurrently.

(b) Test. Stresses due to test conditions are not subject to the limitations of para. 1102.3. It is not necessary to consider other occasional loads, such as wind and earthquake, as occurring concurrently with the live, dead, and test loads existing at the time of test.

1102.4 Allowances

1102.4.1 Corrosion and/or Erosion. When corrosion and/or erosion is expected, an increase in wall thickness of the piping, use of inhibitors, internal linings, or coatings, and/or other provisions shall be considered. These provisions, in the judgment of the designer, shall be consistent with the desired expected life of the piping system.

1102.4.2 Threading and Grooving. An allowance for (02) thread or groove depth (in. or mm) shall be included in A in the equation in para. 1104.1.1 when threaded or grooved pipe is allowed by this Code (see para. 1114).

1102.4.3 Weld Joint Factors. Longitudinal or spiral weld joint factor E for various types of pipe is listed in Table 1102.4.3.

1102.4.4 Wall Thickness and Defect Tolerances. Wall (02) thickness tolerances and defect tolerances for pipe shall be as specified in applicable pipe specifications or dimensional standards included in this Code by reference in Mandatory Appendix I.

Copyright ASME International
Provided by IHS under license with ASME
No reproduction or networking permitted without license from IHS
Not for Resale

(02)

Table 1102.3.1(a) Tabulation of Examples of Allowable Stresses for Reference Use in Piping Systems Within the Scope of This Code

Specification No.	Grade	Specified Min. Yield Strength, psi (MPa)	Weld Joint Factor, *E*	Allowable Stress Value, *S*, −20°F to 250°F (−30C° to 120°C), psi (MPa)
Seamless				
API 5L	A25	25,000 (172)	1.00	20,000 (138)
API 5L, ASTM A 53, ASTM A 106	A	30,000 (207)	1.00	24,000 (166)
API 5L, ASTM A 53, ASTM A 106	B	35,000 (241)	1.00	28,000 (193)
ASTM A 106	C	40,000 (278)	1.00	32,000 (222)
ASTM A 333	6	35,000 (241)	1.00	25,000 (174)
ASTM A 524	I	35,000 (241)	1.00	28,000 (193)
ASTM A 524	II	30,000 (207)	1.00	24,000 (166)
API 5L	X42	42,000 (289)	1.00	33,600 (231)
API 5L	X46	46,000 (317)	1.00	36,800 (254)
API 5L	X52	52,000 (358)	1.00	41,600 (286)
API 5L	X56	56,000 (386)	1.00	44,800 (309)
API 5L	X60	60,000 (413)	1.00	48,000 (330)
API 5L	X65	65,000 (448)	1.00	52,000 (258)
API 5L	X70	70,000 (482)	1.00	56,000 (386)
Furnace Butt Welded, Continuous Welded				
ASTM A 53	...	25,000 (172)	0.60	20,000 (138)
API 5L Classes I and II	A25	25,000 (172)	0.60	20,000 (138)
Electric Resistance Welded and Electric Flash Welded				
API 5L	A25	25,000 (172)	1.00	20,000 (138)
API 5L, ASTM A 53, ASTM A 135	A	30,000 (207)	1.00	24,000 (166)
API 5L, ASTM A 53, ASTM A 135	B	35,000 (241)	1.00	28,000 (193)
API 5L	X42	42,000 (289)	1.00	33,600 (231)
API 5L	X46	46,000 (317)	1.00	36,800 (254)
API 5L	X52	52,000 (358)	1.00	41,600 (286)
API 5L	X56	56,000 (386)	1.00	44,800 (309)
API 5L	X60	60,000 (413)	1.00	48,000 (330)
API 5L	X65	65,000 (448)	1.00	52,000 (358)
API 51	X70	70,000 (482)	1.00	56,000 (386)
ASTM A 333	6	35,000 (241)	1.00	25,000 (174)
Electric Fusion Welded				
ASTM A 134	...	...	0.80	...
ASTM A 139	A	30,000 (207)	0.80	24,000 (166)
ASTM A 139	B	35,000 (241)	0.80	28,000 (193)
ASTM A 671	...	Note (1)	1.00 [Notes (2) & (3)]	...
ASTM A 671	...	Note (1)	0.80 Note (4)	...
ASTM A 672	...	Note (1)	1.00 [Notes (2) & (3)]	...
ASTM A 672	....	Note (1)	0.80 Note (4)	...

Copyright ASME International
Provided by IHS under license with ASME
No reproduction or networking permitted without license from IHS
Not for Resale

Table 1102.3.1(a) Tabulation of Examples of Allowable Stresses for Reference Use in Piping Systems Within the Scope of This Code (Cont'd)

Specification No.	Grade	Specified Min. Yield Strength, psi (MPa)	Weld Joint Factor, *E*	Allowable Stress Value, *S*, −20°F to 250°F (−30°C to 120°C), psi (MPa)
Submerged Arc Welded				
API 5L	A	30,000 (207)	1.00	24,000 (166)
API 5L	B	35,000 (241)	1.00	28,000 (193)
API 5L	X42	42,000 (289)	1.00	33,600 (231)
API 5L	X46	46,000 (317)	1.00	36,800 (254)
API 5L	X52	52,000 (358)	1.00	41,600 (286)
API 5L	X56	56,000 (386)	1.00	44,800 (309)
API 5L	X60	60,000 (413)	1.00	48,000 (330)
API 5L	X65	65,000 (448)	1.00	52,000 (358)
API 5L	X70	70,000 (482)	1.00	56,000 (396)
API 5L	X80	80,000 (551)	1.00	57,600 (397)
ASTM A 381	Y35	35,000 (241)	1.00	28,000 (193)
ASTM A 381	Y42	42,000 (290)	1.00	33,600 (232)
ASTM A 381	Y46	46,000 (317)	1.00	36,800 (254)
ASTM A 381	Y48	48,000 (331)	1.00	38,400 (265)
ASTM A 381	Y50	50,000 (345)	1.00	40,000 (276)
ASTM A 381	Y52	52,000 (358)	1.00	41,600 (286)
ASTM A 381	Y60	60,000 (413)	1.00	48,000 (330)
ASTM A 381	Y65	65,000 (448)	1.00	52,000 (358)

GENERAL NOTES:

(a) Allowable stress values *S* shown in this table are equal to 0.80 *E* (weld joint factor) X specified minimum yield strength of the pipe.

(b) Allowable stress values shown are for new pipe of known specification. Allowable stress values for new pipe of unknown specification, ASTM A 120, or used (reclaimed) pipe shall be determined in accordance with para. 1102.3.1.

(c) For some Code computations, particularly with regard to branch connections [see para. 1104.3.1(d)(3)] and expansion, flexibility, structural attachments, supports, and restraints (Chapter II, Part 5), the weld joint factor *E* need not be considered.

(d) For specified minimum yield strength of other grades in approved specifications, refer to that particular specification.

(e) Allowable stress value for cold worked pipe subsequently heated to 600°F (300°C) or higher (welding excepted) shall be 75% of the value listed in this table.

(f) Definitions for the various types of pipe are given in para. 1100.2.

(g) Metric stress levels are given in MPa (1 megapascal = 1 million pascals).

NOTES:

(1) See applicable plate specification for yield strength and refer to para. 1102.3.1 for calculation of *S*.

(2) Factor applies for Classes 12, 22, 32, 42, and 52 only.

(3) Radiography must be performed after heat treatment.

(4) Factor applies for Classes 13, 23, 33, 43, and 53 only.

PART 2
PRESSURE DESIGN OF PIPING COMPONENTS

1103 CRITERIA FOR PRESSURE DESIGN OF PIPING COMPONENTS

The design of piping components, considering the effects of pressure, shall be in accordance with para. 1104. In addition, the design shall provide for dynamic and weight effects included in para. 1101 and design criteria in para. 1102.

1104 PRESSURE DESIGN OF COMPONENTS

1104.1 Straight Pipe

1104.1.1 General (02)

(a) The nominal wall thickness of straight sections of steel pipe shall be equal to or greater than t_n, determined in accordance with

$$t_n = t + A$$

Copyright ASME International
Provided by IHS under license with ASME
No reproduction or networking permitted without license from IHS
Not for Resale

Table 1102.4.3 Weld Joint Factor, *E*

Specification No.	Pipe Type [Note (1)]	Weld Joint Factor, *E*	
		Pipe Mfd. Before 1959	Pipe Mfd. After 1958
ASTM A 53	Seamless	1.00	1.00
	Electric resistance welded	0.85 [Note (2)]	1.00
	Furnace lap welded	0.80	0.80
	Furnace butt welded	0.60	0.60
ASTM A 106	Seamless	1.00	1.00
ASTM A 134	Electric fusion (arc) welded, single or double pass	0.80	0.80
ASTM A 135	Electric resistance welded	0.85 [Note (2)]	1.00
ASTM A 139	Electric fusion welded, single or double pass	0.80	0.80
ASTM A 155	Electric fusion welded	0.90	1.00
ASTM A 381	Electric fusion welded, double submerged arc welded	...	1.00
ASTM A 672	Electric fusion welded	...	1.00 [Note (3)]
API 5L	Seamless	1.00	1.00
	Electric resistance welded	0.85 [Note (2)]	1.00
	Electric flash welded	0.85 [Note (2)]	1.00
	Electric induction welded	...	1.00
	Submerged arc welded	...	1.00
	Furnace lap welded	0.80	0.80 [Note (4)]
	Furnace butt welded	0.60	0.60
API 5LU	Seamless	...	1.00
	Electric resistance welded	...	1.00
	Electric flash welded	...	1.00
	Electric induction welded	...	1.00
	Submerged arc welded	...	1.00
Known	*Known*	Note (5)	Note (6)
Unknown	Seamless	1.00 [Note (7)]	1.00 [Note (7)]
Unknown	Electric resistance or flash welded	0.85 [Note (7)]	1.00 [Note (7)]
Unknown	Electric fusion welded	0.80 [Note (7)]	0.80 [Note (7)]
Unknown	Furnace lap welded or over NPS 4	0.80 [Note (8)]	0.80 [Note (8)]
Unknown	Furnace butt welded or NPS 4 and smaller	0.60 [Note (9)]	0.60 [Note (9)]

NOTES:

(1) Definitions for the various pipe types (weld joints) are given in para. 1100.2.

(2) A weld joint factor of 1.0 may be used for electric resistance welded or electric flash welded pipe manufactured prior to 1959 where:

(a) pipe furnished under this classification has been subjected to supplemental tests and/or heat treatments as agreed to by the supplier and the purchaser, and such supplemental tests and/or heat treatment demonstrates the strength characteristics of the weld to be equal to the minimum tensile strength specified for the pipe; or

(b) pipe has been tested as required for a new pipeline in accordance with para. 1137.4.1.

(3) For classes and grades that have been hydrostatically and nondestructively tested to specification requirements.

(4) *Manufacture was discontinued and process deleted from API 5L in 1962.*

Copyright ASME International
Provided by IHS under license with ASME
No reproduction or networking permitted without license from IHS
Not for Resale

Notes to Table 1102.4.3 (Cont'd)

NOTES:

(5) Factors shown above for pipe manufactured before 1959 apply for new or used (reclaimed) pipe if pipe specification and pipe type are known, and it is known that pipe was manufactured before 1959 or not known whether manufactured after 1958.

(6) Factors shown above for pipe manufactured after 1958 apply for new or used (reclaimed) pipe if pipe specification and pipe type are known, and it is known that pipe was manufactured after 1958.

(7) Factor applies for new or used pipe of unknown specification and ASTM A 120 if type of weld joint is known.

(8) Factor applies for new or used pipe of unknown specification and ASTM A 120 if type of weld joint is known to be furnace lap welded, or for pipe over NPS 4 if type of joint is unknown.

(9) Factor applies for new or used pipe of unknown specification and ASTM A 120 if type of weld joint is known to be furnace butt welded, or for pipe NPS 4 and smaller if type of joint is unknown.

(b) The nomenclature described below is used in the equations for pressure design of straight pipe.

t_n = nominal wall thickness, in. (mm), satisfying requirements for pressure and allowances

t = pressure design wall thickness as calculated in accordance with para. 1104.1.2 for internal pressure, in. (mm). As noted under para. 1102.3.1, in setting design factor, due consideration has been given to, and allowance has been made for, the various underthickness and defect tolerances provided for in the specifications approved by the Code

A = sum of allowances for threading and grooving as required under para. 1102.4.2; corrosion and erosion as required under para. 1102.4.1; and increase in wall thickness, if used, as protective measure under para. 1102.1, in. (mm)

P_i = internal design pressure (see para. 1101.2.2), psi (bar).

D = nominal outside diameter of pipe, in. (mm)

S = applicable allowable stress value in accordance with para. 1102.3.1(a), (b), (c), or (d), psi (MPa)

(02) **1104.1.2 Straight Pipe Under Internal Pressure.** The internal pressure design wall thickness t of steel pipe shall be calculated by:

$$t = \frac{P_i D}{2S} \left(t_2 = \frac{P_i D}{20S} \right)$$

1104.1.3 Straight Pipe Under External Pressure. Slurry transportation pipelines may be subject to conditions during construction and operation where the external pressure exceeds the internal pressure (e.g., vacuum within the pipe or pressure outside the pipe when submerged). The pipe wall selected shall provide adequate strength to prevent collapse; all appropriate engineering design factors shall be taken into consideration, including, but not limited to, mechanical properties, variations in wall thickness permitted by the material specifications, ellipticity (out-of-roundness), bending stresses, and external loads.

1104.2 Curved Segments of Pipe

Changes in direction may be made by bending the pipe in accordance with para. 1106.2.1 or installing factory made bends or elbows in accordance with para. 1106.2.3.

1104.2.1 Pipe Bends. The wall thickness of pipe before bending shall be determined as for straight pipe in accordance with para. 1104.1. Bends shall meet the flattening limitations of para. 1134.7.1(b).

1104.2.2 Elbows (02)

(a) The minimum metal thickness of flanged or threaded elbows shall not be less than specified for the pressures and temperatures in the applicable American National Standard or the MSS Standard Practice.

(b) Steel butt welding elbows shall comply with ASME B16.9, ASME B16.28, or MSS SP-75, and shall have pressure-temperature ratings based on the same stress values as were used in establishing the pressure and temperature limitations for pipe of the same or equivalent materials.

1104.3 Intersections (02)

1104.3.1 Branch Connections. Branch connections may be made by means of tees, crosses, integrally reinforced extruded outlet headers, or welded connections, and shall be designed in accordance with the requirements listed in (a) through (e) of this paragraph. The possibility of erosion should be considered in slurry service wherever piping discontinuities occur.

(a) Tees and Crosses

(1) The minimum metal thickness of flanged or threaded tees and crosses shall not be less than specified for the pressures and temperatures in the applicable American National Standard or the MSS Standard Practice.

(2) Steel butt welding tees and crosses shall comply with ASME B16.9 or MSS SP-75, and shall have pressure and temperature ratings based on the same stress values

Copyright ASME International
Provided by IHS under license with ASME
No reproduction or networking permitted without license from IHS
Not for Resale

as were used in establishing the pressure and temperature limitations for pipe of the same or equivalent material.

(3) Steel butt welding tees and crosses may be used for all ratios of branch diameter to header diameter, and all ratios of design hoop stress to specified minimum yield strength of the adjoining header and branch pipe, provided they comply with (2) preceding.

(b) *Integrally Reinforced Extruded Outlet Headers*

(1) Integrally reinforced extruded outlet headers may be used for all ratios of branch diameter to header diameter, and all ratios of design hoop stress to specified minimum yield strength of the joining header and branch pipe, provided they comply with (2) through (8) immediately following.

(2) When the design meets the limitations on geometry contained herein, the rules established are valid and meet the intent of the Code. These rules cover minimum requirements and are selected to assure satisfactory performance of extruded headers subjected to pressure. In addition, however, forces and moments are usually applied to the branch by such agencies as thermal expansion and contraction; vibration; dead weight of piping, valves, and fittings; covering and contents; and earth settlement. Consideration shall be given to the design of extruded headers so that they will withstand these forces and moments. In slurry pipelines, the possibility of erosion should be considered in the design of branch connections.

(3) *Definition*

(a) An *extruded outlet header* is defined as a header in which the extruded lip at the outlet has a height above the surface of the header which is equal to or greater than the radius of curvature of the external contoured portion of the outlet; i.e., $h_o \geq r_o$. See nomenclature and Fig. 1104.3.1(b)(3).

(b) These rules do not apply to any nozzle in which additional nonintegral material is applied in the form of rings, pads, or saddles.

(c) These rules apply only to cases where the axis of the outlet intersects, and is perpendicular to, the axis of the header.

(4) *Nomenclature.* The notation used herein is illustrated in Fig. 1104.3.1(b)(3). All dimensions are in inches (millimeters).

d = outside diameter of branch pipe
d_c = internal diameter of branch pipe
D = outside diameter of header
D_c = internal diameter of header
D_o = internal diameter of extruded outlet measured at the level of the outside surface of header
h_o = height of the extruded lip. This must be equal to or greater than r_o, except as shown in (4)(b).
L = height of the reinforcement zone
$= 0.7\sqrt{dT_o}$
t_b = required thickness of the branch pipe according to the wall thickness equation (see para. 1104.1.2)
T_b = actual nominal wall thickness of branch
t_h = required thickness of the header according to the wall thickness equation (see para. 1104.1.2)
T_h = actual nominal wall thickness of header
T_o = finished thickness of extruded outlet measured at a height equal to r_o above the outside surface of the header
r_1 = half-width of reinforcement zone (equal to D_o)
r_o = radius of curvature of external contoured portion of outlet measured in the plane containing the axes of the header and branch. This is subject to the following limitations.

(a) *Minimum Radius.* This dimension shall not be less than $0.05d$ except on branch diameters larger than NPS 30, which need not exceed 1.50 in. (38 mm).

(b) *Maximum Radius.* For outlet pipe sizes NPS 8 and larger, this dimension shall not exceed $0.10d + 0.50$ in. (13 mm). For outlet pipe sizes less than NPS 8, this dimension shall not be greater than 1.25 in. (32 mm).

(c) When the external contour contains more than one radius, the radius of any arc sector of approximately 45 deg shall meet the requirements of the preceding (a) and (b).

(d) Machining shall not be employed in order to meet the preceding requirements.

(5) *Required Area.* The required area is defined as $A = Kt_hD_o$ where K shall be taken as follows.

(a) Where $d/D > 0.60$, $K = 1.00$.

(b) Where $d/D > 0.15$ and ≤ 0.60, $K = 0.6 + (2/3)d/D$.

(c) Where $d/D \leq 0.15$, $K = 0.70$.

The design must meet the following criteria: The reinforcement area defined in (6) is not less than the required area.

(6) *Reinforcement Area.* The reinforcement area shall be the sum of $A_1 + A_2 + A_3$, defined as:

(a) *Area* A_1. The area lying within the reinforcement zone resulting from any excess thickness available in the header wall; i.e.,

$$A_1 = D_o\,(T_h - t_h)$$

(b) *Area* A_2. The area lying within the reinforcement zone resulting from any excess thickness available in the branch pipe wall; i.e.,

$$A_2 = 2L\,(T_b - t_b)$$

(c) *Area* A_3. The area lying within the reinforcement zone resulting from excess thickness available in the extruded outlet lip; i.e.,

$$A_3 = 2r_o\,(T_o - T_b)$$

Copyright ASME International
Provided by IHS under license with ASME
No reproduction or networking permitted without license from IHS
Not for Resale

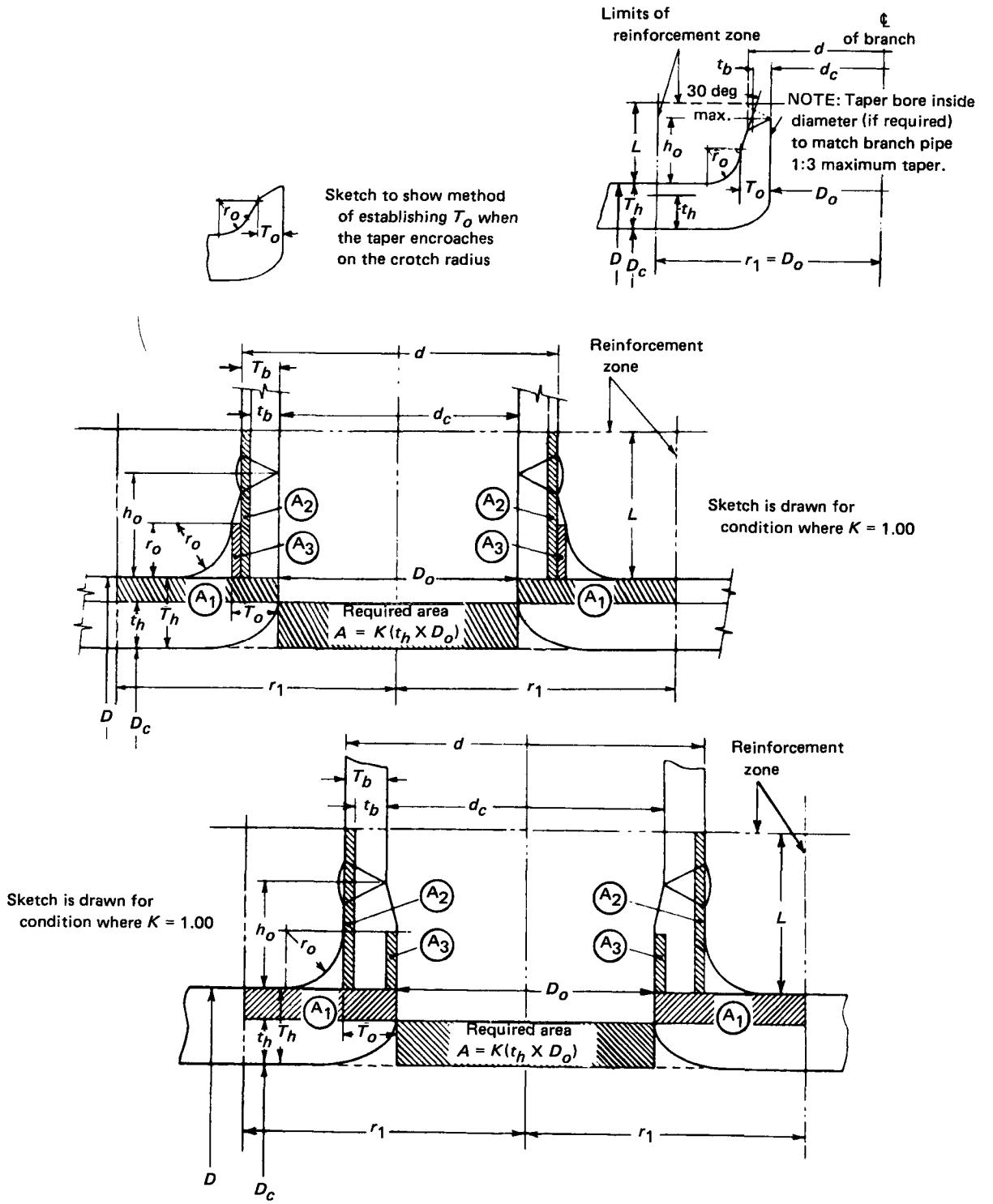

Fig. 1104.3.1(b)(3) Reinforced Extruded Outlets

Copyright ASME International
Provided by IHS under license with ASME
No reproduction or networking permitted without license from IHS
Not for Resale

(7) Reinforcement of Multiple Openings. The requirements outlined in para. 1104.3.1(e) shall be followed, except that the required area and reinforcement area shall be as given in the preceding (5) and (6).

(8) The manufacturer shall be responsible for establishing the design pressure and temperature under provisions of ASME B31.11, and for marking, as shown, the design pressure and temperature, and the manufacturer's name or trademark, on sections containing extruded outlets:

(design pressure and temperature)
Established under provisions of ASME B31.11
(manufacturer's name or trademark)

(c) Welded Branch Connections. Welded branch connections shall be as shown in Figs. 1104.3.1(c)(1), 1104.3.1(c)(2), and 1104.3.1(c)(3). Design shall meet the minimum requirements listed in Table 1104.3.1(c) and described by 1104.3.1(b)(1) – (4). Where reinforcement is required, (5) and (6) above shall apply.

(1) Smoothly contoured wrought tees or crosses of proven design or integrally reinforced extruded headers are preferred. When such tees, crosses, or headers are not used, the reinforcing member shall extend completely around the circumference of the header [see Fig. 1104.3.1(c)(1) for typical constructions] . The inside edges of the finished opening shall be rounded wherever possible to a $\frac{1}{8}$ in. (3 mm) radius. If the encircling member is thicker than the header, and its ends are to be welded to the header, the ends shall be chamfered (at approximately 45 deg) down to a thickness not in excess of the header thickness, and continuous fillet welds shall be made. Pads, partial saddles, or other types of localized reinforcements are prohibited.

(2) The reinforcement member may be of the complete encirclement type [see Fig. 1104.3.1(c)(1)] , pad or saddle type [see Fig. 1104.3.1(c)(2)] , or welding outlet fitting type. Where attached to the header by fillet welding, the edges of the reinforcement member shall be chamfered (at approximately 45 deg) down to a thickness not in excess of the header thickness. The diameter of the hole cut in the header pipe for a branch connection shall not exceed the outside diameter of the branch connection by more than $\frac{1}{4}$ in. (6 mm).

(3) Reinforcement for branch connections with a hole cut NPS 2 pipe size or smaller is not required [see Fig. 1104.3.1(c)(3) for typical details]; however, care shall be taken to provide suitable protection against vibrations and other external forces to which these small branch connections are frequently subjected.

(4) Reinforcement of openings is not mandatory; however, reinforcement may be required for cases involving pressure over 100 psi (689 kPa), thin wall pipe, or severe external loads.

(5) If a reinforcement member is required, and the branch diameter is such that a localized type of reinforcement member would extend around more than one-half the circumference of the header, then a complete encirclement type of reinforcement member shall be used, regardless of the design hoop stress; or a smoothly contoured wrought steel tee or cross of proven design, or an extruded header, may be used.

(6) The reinforcement shall be designed in accordance with para. 1104.3.1(d).

(d) Reinforcement of Single Openings

(1) When welded branch connections are to be made to pipe in the form of a single connection, or in a header or manifold as a series of connections, the design shall be adequate to control the stress levels in the pipe within safe limits. The construction shall take into account the stresses in the remaining pipe wall due to the opening in the pipe or header, the shear stresses produced by the pressure acting on the area of the branch opening, and any external loading due to thermal movement, weight, vibration, etc.; and shall meet the minimum requirements listed in Table 1104.3.1(c). The following paragraphs provide design rules based on stress intensification created by the existence of a hole in an otherwise symmetrical section. External loadings, such as those due to thermal expansion or unsupported weight of connecting pipe, have not been evaluated. These factors should be given attention in unusual designs or under conditions of cyclic loading.

When pipe which has been cold worked to meet the specified minimum yield strength is used as a header containing single or multiple welded branch connections, stresses shall be in accordance with para. 1102.3.1(d).

(2) The reinforcement required in the crotch section of a welded branch connection shall be determined by the rule that the metal area available for reinforcement shall be equal to or greater than the required cross-sectional area as defined in 1104.3.1(d)(3) and in Fig. 1104.3.1(d)(2).

(3) The required cross-sectional area A_R is defined as follows:

$$A_R = dt_h$$

where

d = length of the finished opening in the header wall measured parallel to the axis of the header

t_h = design header wall thickness required by para. 1104.1.2. For welded pipe, when the branch does not intersect the longitudinal or spiral weld of the header, the allowable stress value for seamless pipe of comparable grade may be used in determining t_h for the purpose of reinforcement calculations only. When the branch does intersect the longitudinal or spiral weld of the header, the allowable stress value S of the header shall be used in the calculation. The allowable stress value S of the branch shall be used in calculating t_b.

Copyright ASME International
Provided by IHS under license with ASME
No reproduction or networking permitted without license from IHS
Not for Resale

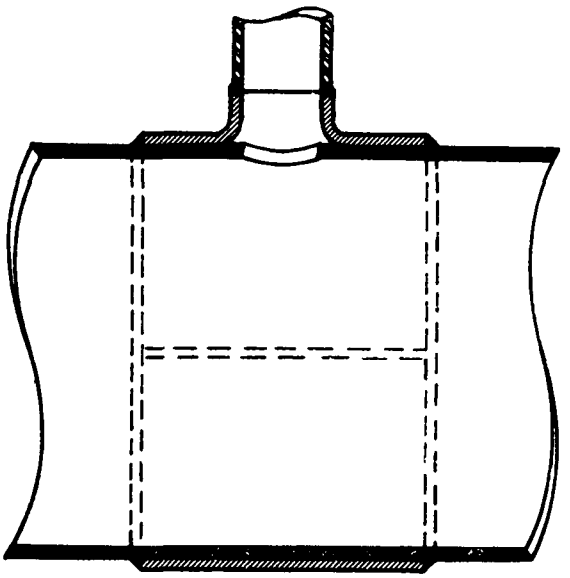

GENERAL NOTE:
Since fluid pressure is exerted on both sides of pipe metal under tee, the pipe metal does not provide reinforcement.

Tee Type

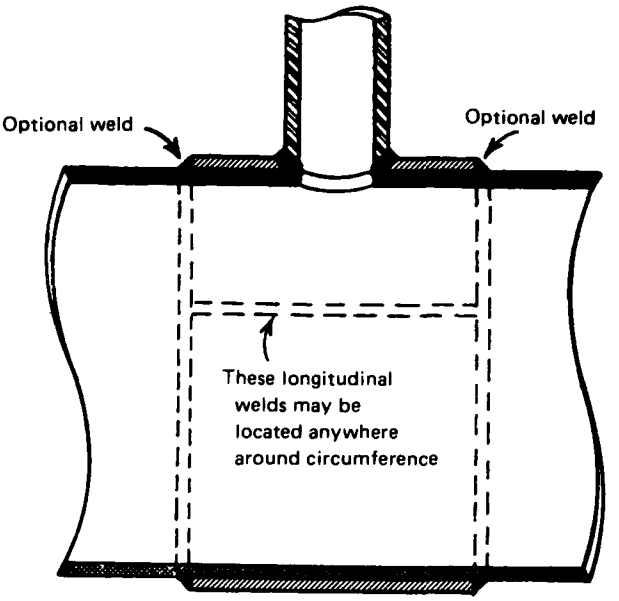

GENERAL NOTE:
Provide hole in reinforcement to reveal leakage in buried welds and to provide venting during welding and heat treatment [see para. 404.3.1(d)(8)]. Not required for tee type.

Sleeve Type

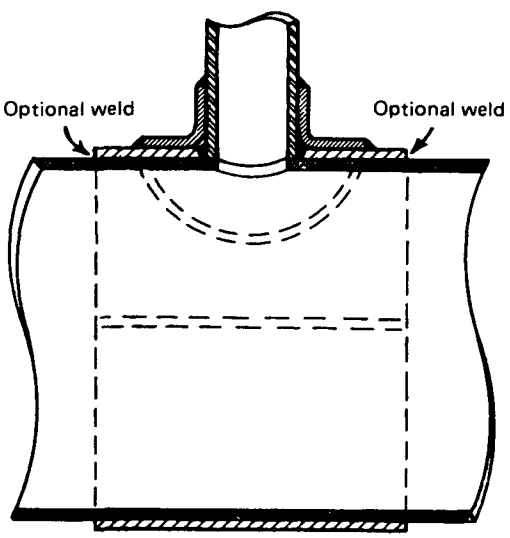

Saddle and Sleeve Type

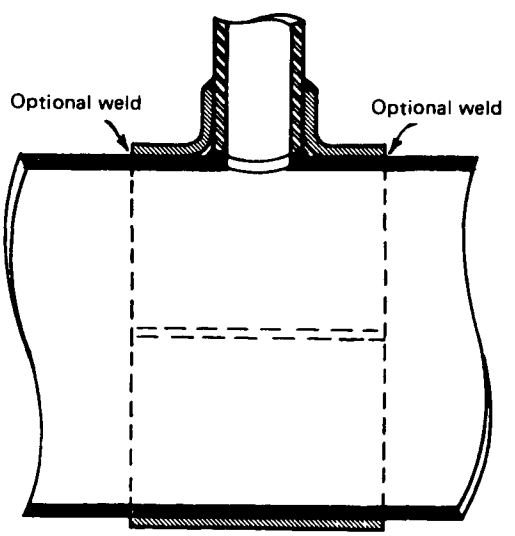

Saddle Type

GENERAL NOTE:
If the encircling member for tee, sleeve, or saddle type is thicker than the header and its ends are to be welded to the header, the ends shall be chamfered (at approximately 45 deg) down to a thickness not in excess of the header thickness.

Fig. 1104.3.1(c)(1) Welding Details for Openings With Complete Encirclement Types of Reinforcement

Copyright ASME International
Provided by IHS under license with ASME
No reproduction or networking permitted without license from IHS
Not for Resale

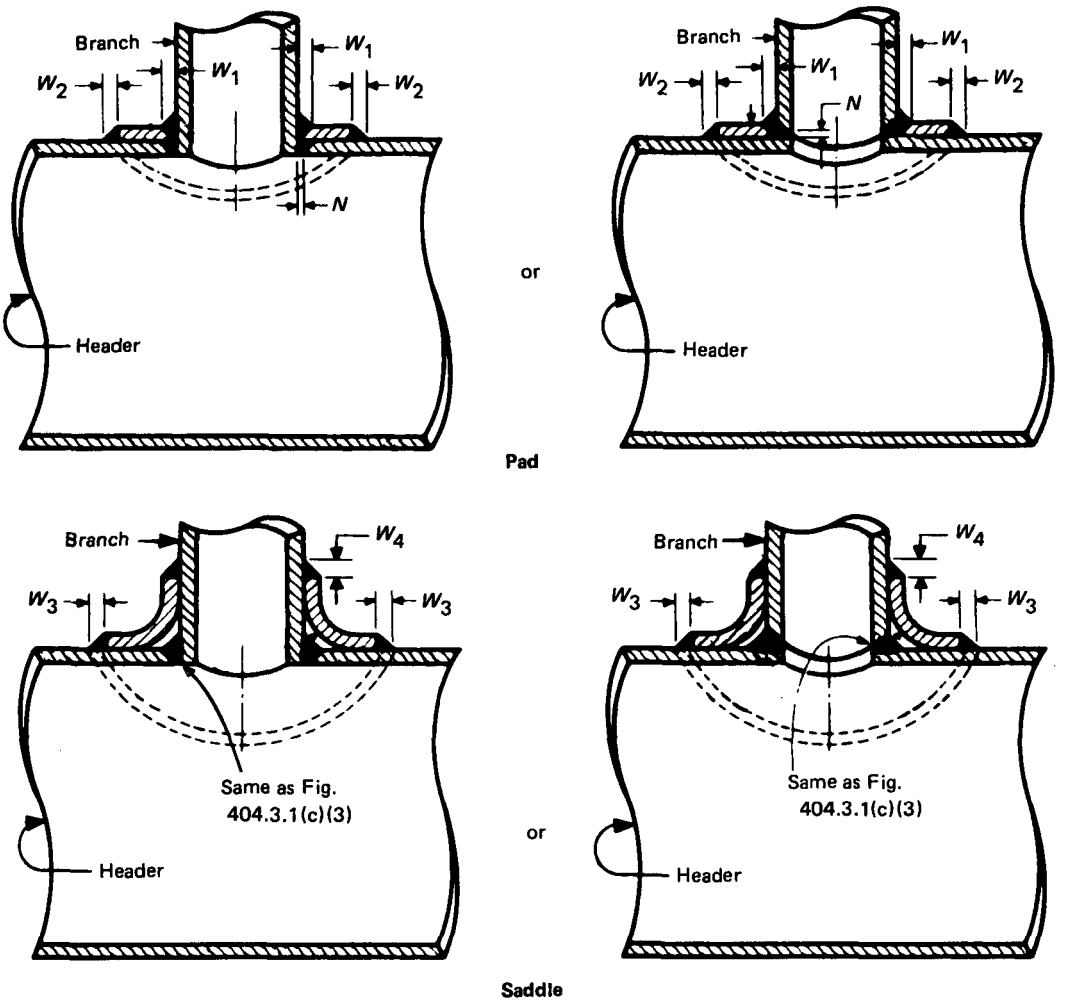

M = nominal wall thickness of pad reinforcement member
M_b = nominal wall thickness of saddle at branch end
M_h = nominal wall thickness of saddle at header end
N = 1/16 in. (1.5 mm) (min.), 1/8 in. (3 mm) (max.) (unless back welded or backing strip is used)
T_b = nominal wall thickness of branch
T_h = nominal wall thickness of header
W_1 (min.) = the smaller of T_b, M, or 3/8 in. (10 mm)
W_2 (max.) = approx. T_h
W_2 (min.) = the smaller of 0.7 T_h, 0.7 M, or 1/2 in. (13 mm)
W_3 (max.) = approx. T_h
W_3 (min.) = the smaller of 0.7 T_h, 0.7 M_h, or 1/2 in. (13 mm)
W_4 (min.) = the smaller of T_b, M_b, or 3/8 in. (10 mm)

GENERAL NOTES:
(a) All welds are to have equal leg dimensions and a minimum throat equal to 0.707 × leg dimension.
(b) If the reinforcing member is thicker at its edge than the header, the edge shall be chamfered (at approximately 45 deg) down to a thickness such that leg dimensions of the fillet weld shall be within the minimum and maximum dimensions specified above.
(c) A hole shall be provided in reinforcement to reveal leakage in buried welds and to provide venting during welding and heat treatment [see para. 404.3.1(d)(8)].

Fig. 1104.3.1(c)(2) Welding Details for Openings With Localized-Type Reinforcement

Copyright ASME International
Provided by IHS under license with ASME
No reproduction or networking permitted without license from IHS
Not for Resale

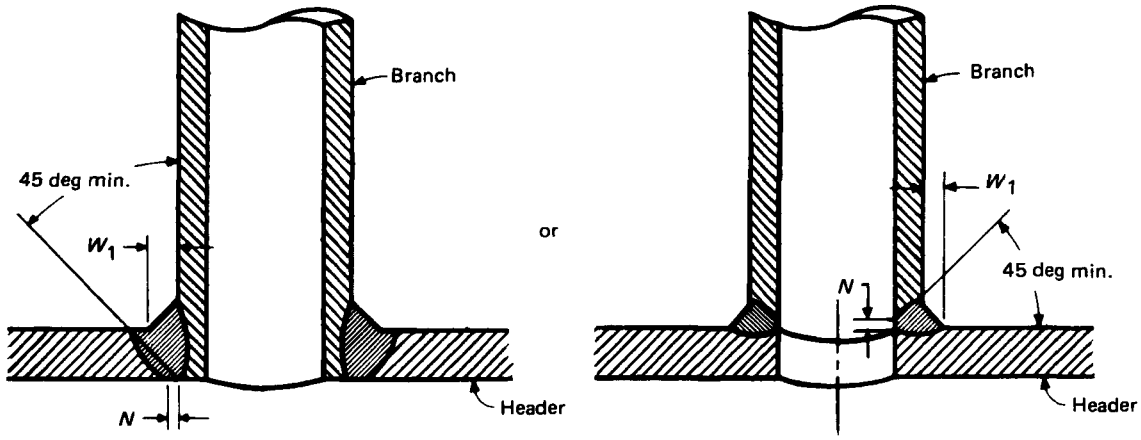

T_h = nominal wall thickness of header
T_b = nominal wall thickness of branch
W_1 (min.) = the smaller of T_h, T_b or 3/8 in. (10 mm)
N = 1/16 in. (1.5 mm) (min.), 1/8 in. (3 mm) (max.) unless back welded or backing strip is used

GENERAL NOTE:
When a welding saddle is used, it shall be inserted over this type of connection. See Fig. 404.3.1(c)(2).

Fig. 1104.3.1(c)(3) Welding Details for Openings Without Reinforcement Other Than in Header and Branch Walls

Table 1104.3.1(c) Design Criteria for Welded Branch Connections

Ratio of Design Hoop Stress to Specified Min. Yield Strength of the Header	Ratio of Diameter of Hole Cut for Branch Connection to Nominal Header Diameter		
	25% or Less	More Than 25% Through 50%	More Than 50%
20% or less	(4)	(4)	(4) & (5)
More than 20% through 50%	(2) & (3)	(2)	(1)
More than 50%	(2) & (3)	(2)	(1)

(4) The area available for the reinforcement shall be the sum of

(a) the cross-sectional area resulting from any excess thickness available in the header thickness (over the minimum required for the header as defined in para. 1104.1.2) and which lies within the reinforcement area as defined in para. 1104.3.1(d)(5);

(b) the cross-sectional area resulting from any excess thickness available in the branch wall thickness (over the minimum thickness required for the branch) and which lies within the reinforcement area as defined in para. 1104.3.1(d)(5); and

(c) the cross-sectional area of all added reinforcing metal, including weld metal, which is welded to the header wall and lies within the reinforcement area as defined in para. 1104.3.1(d)(5).

(5) The reinforcement area is shown in Fig. 1104.3.1(d)(2) and is defined as a rectangle whose length shall extend a distance d [see para. 1104.3.1(d)(3)] on each side of the transverse centerline of the finished opening and whose width shall extend a distance of 2 ½ times the header wall thickness from the outside surface of the header wall, except that in no case shall it extend more than 2½ times the thickness of the branch wall from the outside surface of the header or of the reinforcement, if any.

(6) The material of any added reinforcement shall have an allowable working stress at least equal to that of the header wall, except that material of lower allowable stress may be used if the area is increased in direct ratio to the allowable stresses for header and reinforcement material, respectively.

Copyright ASME International
Provided by IHS under license with ASME
No reproduction or networking permitted without license from IHS
Not for Resale

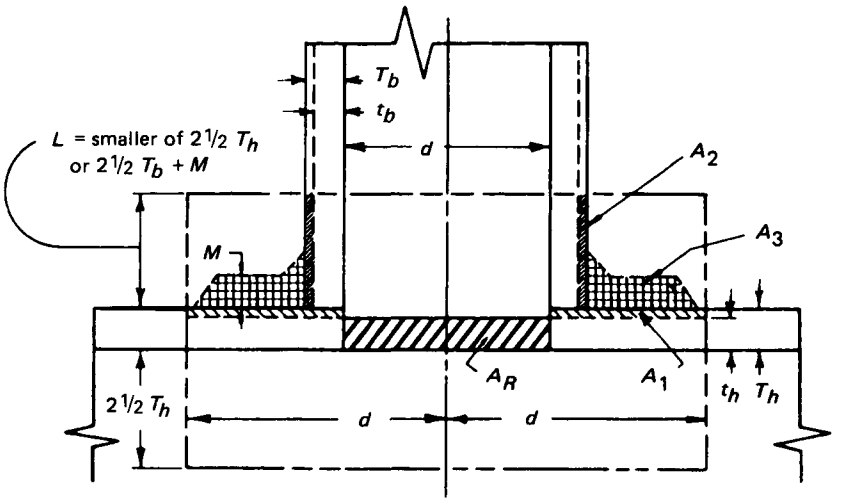

"Area of reinforcement" enclosed by ——— – – ——— lines
Reinforcement area required $A_R = dt_h$
Area available as reinforcement = $A_1 + A_2 + A_3$
$A_1 = (T_h - t_h)\ d$
$A_2 = 2\ (T_b - t_b)\ L$
A_3 = summation of area of all added reinforcement, including weld areas that lie within the "area of reinforcement"
$A_1 + A_2 + A_3$ must be equal to or greater than A_R
where
T_h = nominal wall thickness of header
T_b = nominal wall thickness of branch
t_b = design branch wall thickness required by para. 404.1.2
t_h = design header wall thickness required by para. 404.1.2
d = length of the finished opening in the header wall (measured parallel to the axis of the header)
M = actual (by measurement) or nominal thickness of added reinforcement

Fig. 1104.3.1(d)(2) Reinforcement of Branch Connections

(7) The material used for ring or saddle reinforcement may be of specifications differing from those of the pipe, provided the cross-sectional area is made in correct proportions to the relative strength of the pipe and reinforcement materials at the operating temperatures, and provided it has welding qualities comparable to those of the pipe. No credit shall be taken for the additional strength of material having a higher strength than that of the part to be reinforced.

(8) When rings or saddles are used which cover the weld between branch and header, a vent hole shall be provided in the ring or saddle to reveal leakage in the weld between branch and header and to provide venting during welding and heat treating operations. Vent holes shall be plugged during service to prevent crevice corrosion between pipe and reinforcing member, but no plugging material shall be used that would be capable of sustaining pressure within the crevice.

(9) The use of ribs or gussets shall not be considered as contributing reinforcement to the branch connection. This does not prohibit the use of ribs or gussets for purposes other than reinforcements, such as stiffening.

(10) The branch shall be attached by a weld for the full thickness of the branch or header wall plus a fillet weld W_1 as shown in Figs. 1104.3.1(c)(2) and 1104.3.1(c)(3). The use of concave fillet welds is preferred to minimize corner stress concentration. Ring or saddle reinforcement shall be attached as shown by Fig. 1104.3.1(c)(2). If the reinforcing member is thicker at its edge than the header, the edge shall be chamfered (at approximately 45 deg) down to such a thickness that leg dimensions of the fillet weld shall be within the minimum and maximum dimensions specified in Fig. 1104.3.1(c)(2).

(11) Reinforcement rings and saddles shall be accurately fitted to the parts to which they are attached. Figures 1104.3.1(c)(1) and 1104.3.1(c)(2) illustrate some acceptable forms of reinforcement.

Branch connections attached at an angle of less than 90 deg to the header become progressively weaker as

Copyright ASME International
Provided by IHS under license with ASME
No reproduction or networking permitted without license from IHS
Not for Resale

the angle becomes smaller. Any such design shall be given individual study, and sufficient reinforcement shall be provided to compensate for the inherent weakness of such a construction. The use of encircling ribs to support the flat or reentering surfaces is permissible and may be included in the strength considerations. The designer is cautioned that stress concentrations near the ends of partial ribs, straps, or gussets may defeat their reinforcing value, and their use is not recommended.

(e) Reinforcement of Multiple Openings

(1) Two adjacent branches should preferably be spaced at such a distance that their individual effective areas of reinforcement do not overlap. When two or more adjacent branches are spaced at less than two times their average diameter (so that their effective areas of reinforcement overlap), the group of openings shall be reinforced in accordance with para. 1104.3.1(d). The reinforcing metal shall be added as a combined reinforcement, the strength of which shall equal the combined strengths of the reinforcements that would be required for the separate openings. In no case shall any portion of a cross section be considered to apply to more than one opening or be evaluated more than once in a combined area.

(2) When more than two adjacent openings are to be provided with a combined reinforcement, the minimum distance between centers of any two of these openings shall preferably be at least $1\frac{1}{2}$ times their average diameter, and the area of reinforcement between them shall be at least equal to 50% of the total required for these two openings on the cross section being considered.

(3) When two adjacent openings as considered under para. 1104.3.1(e)(2) have a distance between centers of less than $1\frac{1}{3}$ times their average diameter, no credit for reinforcement shall be given for any of the metal between these two openings.

(4) When pipe which has been cold worked to meet the specified minimum yield strength is used as a header containing single or multiple welded branch connections, stresses shall be in accordance with para. 1102.3.1(d).

(5) Any number of closely spaced adjacent openings, in any arrangement, may be reinforced as if the group were treated as one assumed opening of a diameter enclosing all such openings.

1104.3.4 Attachments. External and internal attachments to piping shall be so designed that they will not cause flattening of the pipe, excessive localized bending stresses, or harmful thermal gradients in the pipe wall. See para. 1121.1 for design of pipe supporting elements.

1104.5 Pressure Design of Flanges and Blanks

(02) 1104.5.1 Flanges: General

(a) The design of flanges manufactured in accordance with para. 1108.1 and the standards listed in Table 1123.1 shall be considered suitable for use at the pressure-temperature ratings as set forth in para. 1102.2.1.

(b) It is permissible to inside taper bore the hubs on welding neck flanges having dimensions complying with ASME B16.5 when they are to be attached to thin wall pipe. It is recommended that the taper shall not be more abrupt than 1:3 MSS SP-44, 26 in. (660 mm) and larger "pipeline" flanges are designed for attachment to thin wall pipe and are preferred for this service.

(c) Where conditions require the use of flanges other than those covered in para. 1108.1, the flanges shall be designed in accordance with Appendix II of Section VIII, Division 1, of the ASME Boiler and Pressure Vessel Code.

(d) Slip-on flanges of rectangular cross section shall be so designed that flange thickness is increased to provide strength equal to that of the corresponding hubbed slip-on flange covered by ASME B16.5, as determined by calculations made in accordance with the ASME Boiler and Pressure Vessel Code, Section VIII, Division 1.

1104.6 Reducers (02)

(a) Reducer fittings manufactured in accordance with ASME B16.5, ASME B16.9, or MSS SP-75 shall have pressure-temperature ratings based on the same stress values as were used in establishing the pressure-temperature limitations for pipe of the same or equivalent material.

(b) Smoothly contoured reducers fabricated to the same nominal wall thickness and of the same type of steel as the adjoining pipe shall be considered suitable for use at the pressure-temperature ratings of the adjoining pipe. Seam welds of fabricated reducers shall be inspected by radiography or other accepted nondestructive methods (visual inspection excepted).

(c) Where appropriate, changes in diameter may be accomplished by reducing elbows, tees, or valves.

1104.7 Pressure Design of Other Pressure Containing Components

Pressure containing components which are not covered by the standards listed in Table 1123.1 and for which design equations or procedures are not given herein may be used where the design of similarly shaped, proportioned, and sized components has been proved satisfactory by successful performance under comparable service conditions. (Interpolation may be made between similarly shaped proven components with small differences in size or proportion.) In the absence of such service experience, the pressure design shall be based on an analysis consistent with the general design philosophy embodied in this Code, and substantiated by at least one of the following:

(a) proof tests (as are described in UG-101 of Section VIII, Division 1, of the ASME Boiler and Pressure Vessel Code);

Copyright ASME International
Provided by IHS under license with ASME
No reproduction or networking permitted without license from IHS
Not for Resale

(b) experimental stress analysis (such as described in Appendix 6 of Section VIII, Division 2, of the ASME Boiler and Pressure Vessel Code);

(c) engineering calculations.

PART 3
DESIGN APPLICATIONS OF PIPING COMPONENTS SELECTION AND LIMITATIONS

1105 PIPE

1105.2 Metallic Pipe

(02) **1105.2.1 Ferrous Pipe**

(a) New pipe of the specifications listed in Table 1123.1 may be used in accordance with the design equation of para. 1104.1.2 subject to the testing requirements of paras. 1137.1.4, 1137.4.1, and 1137.4.3.

(b) Used pipe of known specification listed in Table 1123.1 may be used in accordance with the design equation of para. 1104.1.2 subject to the testing requirements of paras. 1137.4.1, 1137.6.1, 1137.6.3, and 1137.6.4.

(c) New or used pipe of unknown, or ASTM A 120, specification may be used in accordance with the design equation of para. 1104.1.2 with an allowable stress value as specified in para. 1102.3.1(c), and subject to the testing requirements of paras. 1137.4.1, 1137.4.3, 1137.6.1, 1137.6.3, 1137.6.4, and 1137.6.5, if 24,000 psi (165 MPa) yield strength is used to establish an allowable stress value; or para. 1137.4.1, and paras. 1137.6.1 through 1137.6.7, inclusive, if a yield strength above 24,000 psi (165 MPa) is used to establish an allowable stress value.

(d) Pipe that has been cold worked in order to meet the specified minimum yield strength and is subsequently heated to 600°F (300°C) or higher (welding excepted) shall be limited to a stress value as noted in para. 1102.3.1(d).

(e) *Coated or Lined Pipe.* External or internal coatings or linings of cement, plastics, or other materials may be used on steel pipe conforming to the requirements of this Code. These coatings or linings shall not be considered as adding strength.

1106 FITTINGS, ELBOWS, BENDS, AND INTERSECTIONS

1106.1 Fittings

(02) **1106.1.1 General**

(a) *Steel Butt Welding Fittings.* When steel butt welding fittings [see paras. 1104.2.2(b), 1104.3.1(a)(2), and 1104.3.1(a)(3)] are used, they shall comply with ASME B16.9, ASME B16.28, or MSS SP-75.

(b) *Steel Flanged Fittings.* When steel flanged fittings [see paras. 1104.3.1(a)(1) and 1104.5.1] are used, they shall comply with ASME B16.5.

(c) *Fittings Exceeding Scope of Standard Sizes.* Fittings exceeding scope of standard sizes or otherwise departing from dimensions listed in the standards referred to in para. 1106.1.1(a) or 1106.1.1(b) may be used provided the design meets the requirements of paras. 1103 and 1104.

Table 1106.2.1(b) Minimum Radius of Field Cold Bends

Nominal Pipe Size (NPS)	Minimum Radius of Bend in Pipe Diameters
12 and smaller	18*D*
14	21
16	24
18	27
20 and larger	30

GENERAL NOTE: In some cases, thin wall pipe will require the use of an internal mandrel when being bent to the minimum radii tabulated above.

1106.2 Bends and Intersections

1106.2.1 Bends Made From Pipe

(a) Bends may be made by bending the pipe when they are designed in accordance with para. 1104.2.1 and made in accordance with para. 1134.7.1.

(b) Except as permitted under para. 1106.2.1(c), the minimum radius of field cold bends shall be as shown in Table 1106.2.1(b).

(c) Bends may be made by bending the pipe in sizes NPS 14 and larger to a minimum radius of 18*D*; however, bending pipe to radii approaching 18*D* that will meet requirements in para. 1134.7.1(b) will be dependent upon wall thickness, ductility, ratio of pipe diameter to wall thickness, use of bending mandrel, and skill of bending crew. Test bends shall be made to determine that the field bending procedure used produces bends meeting the requirements of para. 1134.7.1(b), and that the wall thickness after bending is not less than the minimum permitted by the pipe specification.

1106.2.2 Mitered Bends. In systems intended to operate at a hoop stress of more than 20% of the specified minimum yield strength of the pipe, miter bends are prohibited. Miter bends not exceeding 12½ deg may be used in systems operated at a hoop stress of 20% or less of the specified minimum yield strength of the pipe, and the minimum distance between miters measured at the crotch shall not be less than one pipe diameter. When the system is to be operated at a hoop stress of less than 10% of the specified minimum yield strength of the pipe, the restriction to 12½ deg maximum miter and distance between miters will not apply. Deflections caused by misalignment up to 3 deg are not considered miter bends. The designer is cautioned that the discontinuities inherent in a mitered bend may cause erosion.

Copyright ASME International
Provided by IHS under license with ASME
No reproduction or networking permitted without license from IHS
Not for Resale

1106.2.3 Factory-Made Bends and Elbows

(a) Factory-made bends and factory-made wrought steel elbows may be used provided they meet the design requirements of paras. 1104.2.1 and 1104.2.2 and the construction requirements of para. 1134.7.2. Such fittings shall have approximately the same mechanical properties and chemical composition as the pipe to which they are welded.

(b) If factory-made elbows are used in cross-country lines, care should be taken to allow for passage of pipeline scrapers.

1106.2.4 Wrinkle Bends. Wrinkle bends shall not be used.

1106.3 Couplings

Cast, malleable, or wrought iron threaded couplings are prohibited.

1106.4 Reductions

(02) **1106.4.1 Reducers.** Reductions in line size may be made by the use of smoothly contoured reducers selected in accordance with ASME B16.5 or ASME B16.9, as applicable; MSS SP-75; or smoothly contoured reducers may be designed as provided in para. 1104.6.

1106.4.2 Orange Peel Swages. Orange peel swages shall not be used.

1106.5 Intersections

Intersection fittings and welded branch connections are permitted within the limitations listed in para. 1106.1 (see para. 1104.3 for design).

1106.6 Closures

(02) **1106.6.1 Quick-Opening Closures.** A quick-opening closure is a pressure-containing component (see para. 1104.7) used for repeated access to the interior of a component of a piping system. It is not the intent of this Code to impose the requirements of a specific design method on the designer or manufacturer of a quick opening closure.

Quick-opening closures used for pressure containment under this Code shall have pressure and temperature ratings equal to or in excess of the design requirements of the piping systems to which they are attached. See paras. 1101.2.2 and 1102.2.

Quick-opening closures shall be equipped with safety locking devices in compliance with Section VIII, Division 1, UG-35(b) of the ASME Boiler and Pressure Vessel Code.

Weld end preparation shall be in accordance with para. 1134.8.6.

1106.6.2 Closure Fittings. Closure fittings commonly referred to as "weld caps" shall be designed and manufactured according to ASME B16.9 or MSS SP-75.

1106.6.3 Closure Heads. Closure heads, such as flat, ellipsoidal (other than in para. 1106.6.2 above), spherical, or conical heads, are allowed for use under this Code. Such items shall be designed in accordance with Section VIII, Division 1, of the ASME Boiler and Pressure Vessel Code. The maximum allowable stresses for materials used in these closure heads shall be established under the provisions of para. 1102.3.

If welds are used in the manufacture of these heads, they shall be 100% radiographically inspected in accordance with the provisions of Section VIII, Division 1.

Closure heads shall have pressure and temperature ratings equal to or in excess of the requirements of para. 1101.2.2. It is not the intent of this Code to extend the design requirements of Section VIII, Division 1, to those components which use closure heads as part of a complete assembly.

1106.6.4 Fabricated Closures. Orange peel bull plugs are prohibited on systems operating at a hoop stress of more than 20% of the specified minimum yield strength of the pipe. Fishtails are permitted for NPS 3 pipe and smaller, operating at less than 100 psi (689 kPa). Fishtails on pipe larger than NPS 3 are prohibited.

1106.6.5 Blind Flange Closures. Blind flange closures shall conform to para. 1108.

1106.8 Special Fittings and Connections

Cast, forged, wrought, or welded steel fittings differing from those specified in the applicable American National Standards and MSS Standard Practices will be permitted provided that their design is in accordance with para. 1104.7.

1107 VALVES

1107.1 General

(a) Steel valves conforming to standards and specifications listed in Table 1123.1 may be used in the sizes and for the pressure-temperature ratings established in these standards. These valves may contain certain cast, malleable, or wrought iron parts as provided for in API 6D.

(b) Cast iron valves conforming to standards and specifications listed in Table 1123.1 may be used. Care shall be exercised to prevent excessive mechanical loadings (see para. 1108.5.4) as provided in para. 1123.2.4.

(c) Working pressure ratings of the steel parts of steel valves are applicable within the temperature limitations of –20°F (–30°C) to 250°F (120°C) (see para. 1101.3.1). Where resilient, rubberlike, or plastic materials are used for sealing, they shall be capable of withstanding the fluid, pressures, and temperatures specified for the piping system.

(d) Valve seats and exposed inner surfaces may be treated for the specific slurry impingement problems involved.

Copyright ASME International
Provided by IHS under license with ASME
No reproduction or networking permitted without license from IHS
Not for Resale

1107.8 Special Valves

Special valves not listed in the standards of Table 1123.1 shall be permitted, provided that their design is of at least equal strength and tightness, they are subjected to the same test requirements as covered in these standards, and structural features satisfy the material specification and test procedures of valves in similar service set forth in the listed standards.

1108 FLANGES, BLANKS, FLANGE FACINGS, GASKETS, AND BOLTING

1108.1 Flanges

(02) **1108.1.1 General**

(a) Flanged connections shall conform to the requirements of paras. 1108.1, 1108.3, 1108.4, and 1108.5.

(b) Steel Flanges Within Scope of Standard Sizes. Flanges conforming to ASME B16.5 or MSS SP-44 are permitted for the pressure-temperature ratings shown in para. 1102.2.1. The bore of welding neck flanges should correspond to the inside diameter of the pipe with which they are to be used. See para. 1104.5.1 for design.

(c) Cast Iron Flanges. Cast iron flanges are prohibited except for those which are an integral part of cast iron valves, pressure vessels, and other equipment and proprietary items [see paras. 1107.1(b) and 1123.2.4(b)].

(d) Steel Flanges Exceeding Scope of Standard Sizes. Flanges exceeding the scope of standard sizes or otherwise departing from dimensions listed in ASME B16.5 or MSS SP-44 may be used provided they are designed in accordance with para. 1104.5.1.

1108.3 Flange Facings

(02) **1108.3.1 General**

(a) Steel or cast iron standard flanges shall have contact faces in accordance with ASME B16.5, ASME B16.1, and MSS SP-6.

(b) Special flange facings are permissible provided they are capable of sustaining a hydrostatic test pressure equal to 1.5 times rated working pressure. See para. 1108.5.4 for bolting steel to cast iron flanges.

1108.4 Gaskets

1108.4.1 General. Gaskets shall be made of material which is compatible with the slurry in the piping system and shall be capable of withstanding the pressures and temperatures to which they will be subjected in service.

(02) **1108.4.2 Standard Gaskets**

(a) Gaskets conforming to ASME B16.20 or ASME B16.21 may be used.

(b) Metallic gaskets other than ring type or spirally wound metal asbestos shall not be used with ASME Class 150 or lighter flanges.

(c) The use of metal or metal jacketed asbestos (either plain or corrugated) is not limited [except as provided in para. 1108.4.2(b)] as to pressure, provided that the gasket material is suitable for the service temperature. These types of gaskets are recommended for use with small male and female or small tongue and groove facings. They may also be used with steel flanges with any of the following facings: large male and female, large tongue and groove, or raised face.

(d) Asbestos composition gaskets may be used as permitted in ASME B16.5. This type of gasket may be used with any of the various flange facings except small male and female or small tongue and groove.

(e) Rings for ring joints shall be of dimensions established in ASME B16.20. The materials for these rings shall be suitable for the service conditions encountered and shall be softer than the flanges.

1108.4.3 Special Gaskets. Special gaskets, including insulating gaskets, may be used provided they are suitable for the temperatures, pressures, fluids, and other conditions to which they may be subjected.

1108.5 Bolting

1108.5.1 General (02)

(a) Bolts or stud bolts shall extend completely through the nuts.

(b) Nuts shall conform with ASTM A 194 or A 325, except that A 307 Grade B nuts may be used on ASME Classes 150 and 300 flanges.

1108.5.2 Bolting for Steel Flanges. Bolting shall conform to ASME B16.5 or MSS SP-44 except as provided in paras. 1108.5.3 and 1108.5.5. (02)

1108.5.3 Bolting for Insulating Flanges. For insulating flanges, $\frac{1}{8}$ in. (3 mm) undersize bolting may be used, provided that alloy steel bolting material in accordance with ASTM A 193 or A 354 is used and provided that the designer has assured adequacy of such bolting for the service conditions.

1108.5.4 Bolting Steel to Cast Iron Flanges. When bolting ASME Class 150 steel flanges to ASME Class 125 cast iron flanges, heat treated carbon steel or alloy steel bolting (ASTM A 193) may be used only when both flanges are flat face and the gasket is full face; otherwise, the bolting shall have a maximum tensile strength no greater than the maximum tensile strength of ASTM A 307 Grade B. When bolting ASME Class 300 steel flanges to ASME Class 250 cast iron flanges, the bolting shall have a maximum tensile strength no greater than the maximum tensile strength of ASTM A 307 Grade B. Good practice indicates that the flange should be flat faced. (02)

1108.5.5 Bolting for Special Flanges. For flanges designed in accordance with para. 1104.5.1, bolting shall conform to the applicable section of Section VIII, Division 1, of the ASME Boiler and Pressure Vessel Code.

Copyright ASME International
Provided by IHS under license with ASME
No reproduction or networking permitted without license from IHS
Not for Resale

1109 USED PIPING COMPONENTS AND EQUIPMENT

Used piping components, such as fittings, elbows, bends, intersections, couplings, reducers, closures, flanges, valves, and equipment, may be reused. Reuse of pipe is covered by paras. 1105.2.1(b) and (c). However, such components and equipment shall be cleaned and examined; reconditioned, if necessary, to ensure that they meet all requirements for the intended service and are sound; and free of defects.

In addition, reuse shall be contingent on identification of the specification under which the item was originally produced. Where the specification cannot be identified, use of steel shall be restricted to a maximum allowable operating pressure based on a yield strength of 24,000 psi (165 MPa) or less.

PART 4
SELECTION AND LIMITATION OF PIPING JOINTS

1111 WELDED JOINTS

1111.2 Butt Welds

Butt welded joints shall be in accordance with Chapter V.

1112 FLANGED JOINTS

1112.1 General

Flanged joints shall meet the requirements of para. 1108.

1114 THREADED JOINTS

(02) **1114.1 General**

All external pipe threads on piping components shall be taper pipe threads. They shall be line pipe threads in accordance with API 5B, or NPT threads in accordance with ASME B1.20.1. All internal pipe threads on piping components shall be taper pipe threads, except for sizes NPS 2 and smaller with design pressures not exceeding 150 psi (1034 kPa), in which case straight threads may be used.

Least nominal wall thickness for threaded pipe shall be standard wall (see ASME B36.10M).

1118 SLEEVE, COUPLED, AND OTHER PROPRIETARY JOINTS

1118.1 General

Steel connectors and swivels complying with API 6D may be used. Sleeve, coupled, and other proprietary joints, except as limited in para. 1123.2.4(b), may be used, provided:

(a) a production joint has been subjected to similar service conditions or to tests under simulated service conditions to determine the safety of the joint; and

(b) adequate provision is made to prevent separation of the joint and to prevent longitudinal or lateral movement beyond the limits provided for in the joining member.

PART 5
EXPANSION, FLEXIBILITY, STRUCTURAL ATTACHMENTS, SUPPORTS, AND RESTRAINTS

1119 EXPANSION AND FLEXIBILITY

1119.1 General

(a) This Code is applicable to both aboveground and buried piping and covers all classes of materials permitted by this Code. Formal calculations shall be required where reasonable doubt exists as to the adequate flexibility of the piping.

(b) Piping shall be designed to have sufficient flexibility to accommodate expansion or contraction without causing excessive stresses in the piping material, excessive bending moments at joints, or excessive forces or moments at points of connection to equipment or at anchorage or guide points. Allowable forces and moments on equipment may be less than for the connected piping.

(c) Expansion calculations are necessary for buried lines if significant temperature changes are expected, such as when the line is to carry a heated slurry. Thermal expansion of buried lines may cause movement at points where the line terminates, changes in direction, or changes in size. Unless such movements are restrained by suitable anchors, the necessary flexibility shall be provided.

(d) Expansion of aboveground lines may be prevented by anchoring them so that longitudinal expansion, or contraction, due to thermal and pressure changes is absorbed by direct axial compression or tension of the pipe, in the same way as for buried piping. In addition, beam bending stresses shall be included, and the possible elastic instability of the pipe, and its supports, due to longitudinal compressive forces, shall be considered.

1119.5 Flexibility

1119.5.1 Means of Providing Flexibility. Stresses in pipe induced by movement of piping or connected components shall be limited to levels defined in para. 1102.3. Bends, loops, offsets, or joints suitable for the intended service may be used to limit such stresses.

1119.6 Properties

1119.6.1 Coefficient of Thermal Expansion. The linear coefficient of thermal expansion for carbon and high-strength low-alloy steel may be taken as 6.5×10^{-6} in./in./°F for temperatures up to 250°F (11.7×10^{-6} mm/mm/°C for temperatures up to 120°C).

Copyright ASME International
Provided by IHS under license with ASME
No reproduction or networking permitted without license from IHS
Not for Resale

1119.6.2 Modulus of Elasticity. Flexibility calculations shall be based on the modulus of elasticity of 30 × 10^6 psi (210 MPa) for steel at ambient temperature.

1119.6.3 Poisson's Ratio. Poisson's ratio shall be taken as 0.3 for steel.

1119.6.4 Stress Values

(a) General. There are fundamental differences in loading conditions for the buried, or similarly restrained, portions of the piping and the aboveground portions not subject to substantial axial restraint. Therefore, different limits on allowable longitudinal expansion stresses are necessary.

(b) Restrained Lines. The net longitudinal compressive stress due to the combined effects of temperature rise and slurry pressure shall be computed from the equation:

$$S_L = E\alpha (T_2 - T_1) - vS_h$$

where

S_L = longitudinal compressive stress, psi (MPa)
S_h = hoop stress due to slurry pressure, psi (MPa)
T_1 = temperature at time of installation, °F (°C)
T_2 = maximum or minimum operating temperature, °F (°C)
E = modulus of elasticity of steel, psi (MPa)
α = linear coefficient of thermal expansion, in./in./ °F (mm / mm / °C)
v = Poisson's ratio = 0.30 for steel

Note that the net longitudinal stress becomes compressive for moderate increases of T_2, and that according to the commonly used maximum shear theory of failure, this compressive stress adds directly to the hoop stress to increase the equivalent tensile stress available to cause yielding. As specified in para. 1102.3.2(c), this equivalent tensile stress shall not be allowed to exceed 90% of the specified minimum yield strength of the pipe, calculated for nominal pipe wall thickness. Beam bending stresses shall be included in the longitudinal stress for those portions of the restrained line which are supported aboveground.

(c) Unrestrained Lines. Stresses due to expansion for those portions of the piping without substantial axial restraint shall be combined in accordance with the following equation:

$$S_E = \sqrt{S_b^2 + 4S_t^2}$$

where

S_E = stress due to expansion, psi (MPa)
S_b = equivalent bending stress, psi (MPa) = $\sqrt{(i_i M_i)^2 + (i_o M_o)^2}/Z$
S_t = $M_t/2Z$ = torsional stress, psi (MPa)
M_i = bending moment in plane of member (for members having significant orientation, such as elbows or tees; for the latter, the moments in the header and branch portions are to be considered separately), in.-lb (N·m)
M_o = bending moment out of, or transverse to, plane of member, in.-lb (N·m)
M_t = torsional moment, in.-lb (N · m)
i_i = stress intensification factor under bending in plane of member [from Fig. 1119.6.4(c)]
i_o = stress intensification factor under bending out of, or transverse to, plane of member [from Fig. 1119.6.4(c)]
Z = section modulus of pipe, in.^{3} (mm^3)

The maximum computed expansion stress range — S_E without regard for fluid pressure stress, based on 100% of the expansion, with modulus of elasticity for the cold condition — shall not exceed the allowable stress range S_A, where S_A = 0.72 of specified minimum yield strength as noted in para. 1102.3.2(c).

The sum of the longitudinal stresses due to pressure, weight, and other sustained external loadings shall not exceed $0.75S_A$ in accordance with para. 1102.3.2(d).

The sum of the longitudinal stresses produced by pressure, live and dead loads, and those produced by occasional loads such as wind or earthquake, shall not exceed 88% of the specified minimum yield strength of the pipe, in accordance with para. 1102.3.3(a). It is not necessary to consider wind and earthquake as occurring concurrently.

As noted in para. 1102.3.3(b), stresses due to test conditions are not subject to the limitations of para. 1102.3. It is not necessary to consider other occasional loads, such as wind and earthquake, as occurring concurrently with the live, dead, and test loads existing at the time of test.

1119.7 Analysis

1119.7.3 Basic Assumptions and Requirements

(a) The effect of restraints, such as support friction, branch connections, lateral interferences, etc., shall be considered in the stress calculations.

(b) Calculations shall take into account stress intensification factors found to exist in components other than plain straight pipe. Credit may be taken for extra flexibility of such components. In the absence of more directly applicable data, the flexibility factors and stress intensification factors shown in Fig. 1119.6.4(c) may be used.

(c) Nominal dimensions of pipe and fittings shall be used in flexibility calculation.

(d) Calculations of pipe stresses in loops, bends, and offsets shall be based on the total range from minimum to maximum temperature normally expected, regardless of whether piping is cold sprung or not. In addition to expansion of the line itself, the linear and angular movements of the equipment to which it is attached shall be considered.

(e) Calculations of thermal forces and moments on anchors and equipment, such as pumps, meters, and

Copyright ASME International
Provided by IHS under license with ASME
No reproduction or networking permitted without license from IHS
Not for Resale

Description	Flexibility Factor, k	Stress Intensification Factor i_i [Note (1)]	Stress Intensification Factor i_o [Note (2)]	Flexibility Characteristic, h	Sketch
Welding elbow, [Notes (3), (4), (5), (6), (7)] or pipe bend	$\frac{1.65}{h}$	$\frac{0.9}{h^{2/3}}$	$\frac{0.75}{h^{2/3}}$	$\frac{tR}{r^2}$	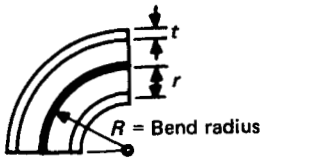
Closely spaced miter bend, [Notes (3), (4), (5), (7)] $s < r(1 + \tan\theta)$	$\frac{1.52}{h^{5/6}}$	$\frac{0.9}{h^{2/3}}$	$\frac{0.75}{h^{2/3}}$	$\frac{\cot\theta}{2}\frac{ts}{r^2}$	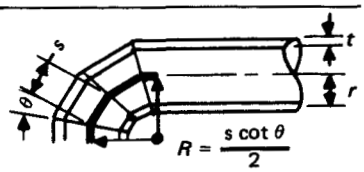
Widely spaced miter bend, [Notes (3), (4), (7), (8)] $s \geq r(1 + \tan\theta)$	$\frac{1.52}{h^{5/6}}$	$\frac{0.9}{h^{2/3}}$	$\frac{0.75}{h^{2/3}}$	$\frac{1 + \cot\theta}{2}\frac{t}{r}$	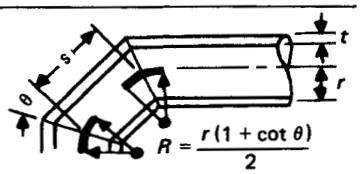
Welding tee [Notes (3), (4)] per ASME B16.9	1	$0.75i_o + 0.25$	$\frac{0.9}{h^{2/3}}$	$4.4\frac{t}{r}$	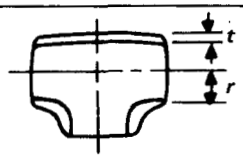
Reinforced tee [Notes (3), (4), (9)] with pad or saddle	1	$0.75i_o + 0.25$	$\frac{0.9}{h^{2/3}}$	$\frac{(t + 1/2\ T)^{5/2}}{t^{3/2}\ r}$	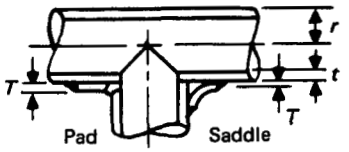
Unreinforced fabricated tee [Notes (3), (4)]	1	$0.75i_o + 0.25$	$\frac{0.9}{h^{2/3}}$	$\frac{t}{r}$	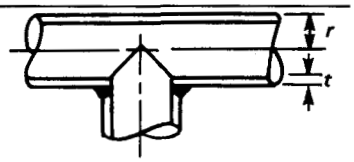
Extruded welding tee [Notes (3), (4), (11)] $r_o \geq 0.05d$ $t_c < 1.5t$	1	$0.75i_o + 0.25$	$\frac{0.9}{h^{2/3}}$	$\left(1 + \frac{r_o}{r}\right)\frac{t}{r}$	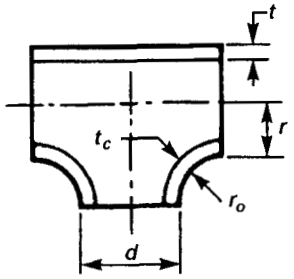
Butt welded joint, reducer, or welding neck flange	1	1.0		...	...
Double welded slip-on flange	1	1.2		...	...

Fig. 1119.6.4(c) Flexibility Factor, k, and Stress Intensification Factor, i (02)

Copyright ASME International
Provided by IHS under license with ASME
No reproduction or networking permitted without license from IHS
Not for Resale

Description	Flexibility Factor, k	Stress Intensification Factor i_i [Note (1)]	Stress Intensification Factor i_o [Note (2)]	Flexibility Characteristic, h	Sketch
Fillet welded joint (single welded), or single welded slip-on flange	1	1.3		...	...
Lapped flange (with ANSI B16.9 lap-joint stub)	1	1.6		...	...
Threaded pipe joint, or threaded flange	1	2.3		...	...
Corrugated straight pipe, or corrugated or creased bend [Note (10)]	5	2.5		...	...

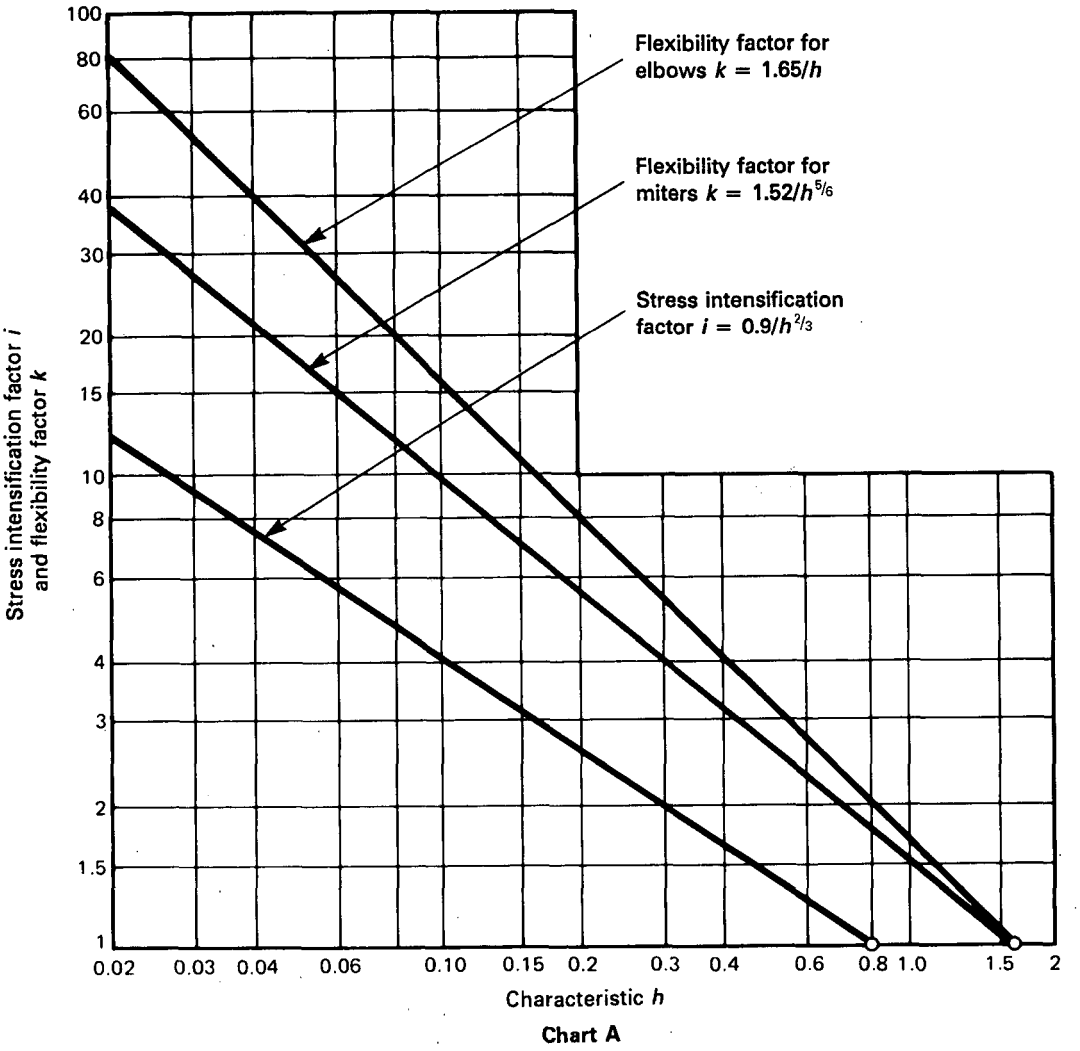

Fig. 1119.6.4(c) Flexibility Factor, k, and Stress Intensification Factor, i (Cont'd)

Copyright ASME International
Provided by IHS under license with ASME
No reproduction or networking permitted without license from IHS
Not for Resale

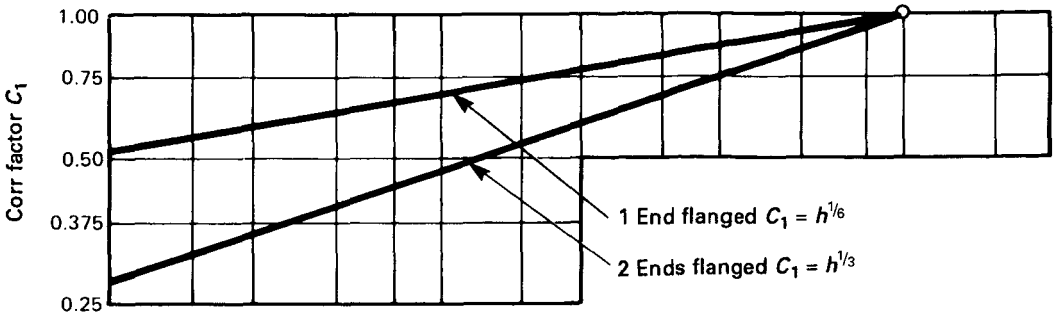

Chart B

NOTES:

(1) In-plane.

(2) Out-of-plane.

(3) For fittings and miter bends, the flexibility factors k and stress intensification factors i in the Table apply to bending in any plane and shall not be less than unity; factors for torsion equal unity. Both factors apply over the effective arc length (shown by heavy center lines in the sketches) for curved and miter elbows, and to the intersection point for tees.

(4) The values of k and i can be read directly from Chart A by entering with the characteristic h computed from the equations given, where

R = bend radius of welding elbow or pipe bend, in. (mm)
T = pad or saddle thickness, in. (mm)
d = outside diameter of branch
r = mean radius of matching pipe, in. (mm)
r_o = see Note (11)
s = miter spacing at center line
t = nominal wall thickness of: part itself, for elbows and curved or mitered bends; matching pipe, for welding tees; run or header, for fabricated tees (provided that if thickness is greater than that of matching pipe, increased thickness must be maintained for at least one run O.D. to each side of the branch O.D.).
t_c = the crotch thickness of tees
θ = one-half angle between adjacent miter axes, deg

(5) Where flanges are attached to one or both ends, the values of k and i in the Table shall be corrected by the factors C_1 given below, which can be read directly from Chart B, entering with the computed h: one end flanged, $h^{1/6} \geq 1$; both ends flanged, $h^{1/3} \geq 1$.

(6) The engineer is cautioned that cast butt welding elbows may have considerably heavier walls than that of the pipe with which they are used. Large errors may be introduced unless the effect of these greater thicknesses is considered.

(7) In large diameter thin wall elbows and bends, pressure can significantly affect the magnitude of flexibility and stress intensification factors. To correct values obained from Table for the pressure effect, divide:

$$\text{Flexibility factor } k \text{ by} \qquad 1 + 6\frac{P}{E_c}\left(\frac{r}{t}\right)^{7/3}\left(\frac{R}{r}\right)^{1/3}$$

$$\text{Stress intensification factor } i \text{ by} \qquad 1 + 3.25\frac{P}{E_c}\left(\frac{r}{t}\right)^{5/2}\left(\frac{R}{r}\right)^{2/3}$$

where

E_c = cold modulus of elasticity
P = gage pressure

(8) Also includes single miter joint.

(9) When $T > 1\frac{1}{2}t$, use $h = 4.05\,t/r$.

(10) Factors shown apply to bending; flexibility factor for torsion equals 0.9.

(11) Radius of curvature of external contoured portion of outlet measured in the plane containing the axes of the run and branch. This is subject to the following limitations:

(a) minimum radius r_o: the lesser of $0.05d$ or 38 mm (1.5 in.);

(b) maximum radius r_o shall not exceed:

(1) for branches DN200 (NPS 8) and larger, $0.10d$ + 13 mm (0.50 in);

(2) for branches less than DN200 (NPS 8), 32 mm (1.25 in.);

(c) when the external contour contains more than one radius, the radius on any arc sector of approximately 45 deg shall meet the requirements of (a) and (b) above; and

(d) machining shall not be employed in order to meet the above requirements.

Fig. 1119.6.4(c) Flexibility Factor, *k*, and Stress Intensification Factor, *i* (Cont'd)

Copyright ASME International
Provided by IHS under license with ASME
No reproduction or networking permitted without license from IHS
Not for Resale

heat exchangers, shall be based on the difference between installation temperature and minimum or maximum anticipated operating temperature, whichever is greater.

1120 LOADS ON EQUIPMENT

1120.1 General

Forces and moments transmitted to connected equipment, such as valves, strainers, tanks, pressure vessels, and pumping machinery, shall be kept within limits that will prevent damage to equipment.

1121 DESIGN OF PIPE SUPPORTING ELEMENTS

1121.1 Supports, Braces, and Anchors

(a) Supports shall be designed to support the pipe without causing excessive local stresses in the pipe and without imposing excessive axial or lateral friction forces that might prevent the desired freedom of movement.

(b) Braces and damping devices may be required to prevent vibration of piping.

(c) All attachments to the pipe shall be designed to minimize the added stresses in the pipe wall because of the attachment. Nonintegral attachments, such as pipe clamps and ring girders, are preferred where they will fulfill the supporting or anchoring functions.

(d) If pipe is designed to operate above 20% of its allowable stress, all attachments to be welded to the pipe shall be attached to a cylindrical member completely encircling the pipe, which shall be welded to the pipe by full encirclement welds.

(e) The applicable sections of MSS SP-58 for materials and design of pipe hangers and supports, and of MSS SP-69 for their selection and application, may be used.

PART 6
OTHER SPECIFIC PIPING

1122 DESIGN REQUIREMENTS

1122.3 Instrument and Other Piping

All instrument and other piping connected to primary slurry piping and which operates at a pressure exceeding 15 psi (103 kPa) shall be constructed in accordance with the provisions of this Code.

1122.6 Pressure Disposal Piping

Pressure disposal or relief piping between the pressure origin point and relief device shall be in accordance with this Code.

1122.6.1 Stop Valves in Piping for Pressure Relieving Safety Devices. A full area stop valve may be installed between origin point and relief device, provided that such valve can be locked or sealed in the open position.

1122.6.2 Discharge Piping for Pressure Relieving Safety Devices. Disposal piping from a relief device shall be connected to a suitable disposal facility, which may be a pit, sump, or tank. This disposal piping shall have no valve between the relief device and disposal facility unless such valve can be locked or sealed in the open position.

Copyright ASME International
Provided by IHS under license with ASME
No reproduction or networking permitted without license from IHS
Not for Resale

CHAPTER III
MATERIALS

1123 MATERIALS: GENERAL REQUIREMENTS

1123.1 Acceptable Materials and Specifications

(a) The materials used shall conform to the specifications listed in Table 1123.1 or shall meet the requirements of this Code for materials not listed. Specific editions of standards incorporated in this Code by reference, and the names and addresses of the sponsoring organizations, are shown in Mandatory Appendix I since it is not practical to refer to a specific edition of each standard in Table 1123.1 and throughout the Code text.

(b) Except as otherwise provided in this Code, materials which do not conform to a listed specification or standard shall be qualified for use by petitioning the Code Committee for approval. Complete information shall be supplied to the Code Committee, and Code Committee approval shall be obtained before the material may be used.

1123.2 Limitations on Materials

1123.2.1 General

(a) The designer shall give consideration to the significance of temperature on the performance of the material.

(b) The designer shall give consideration to the effects of corrosion, erosion (see Chapter VIII), and other deterioration and provide suitable means to mitigate deterioration of the materials in service.

1123.2.3 Steel. Steels for pipe are shown in Table 1123.1.

1123.2.4 Cast Irons

(a) Cast irons, including ductile and malleable, shall not be used for pressure containing parts in valves in paras. 1107.1(a) and (b) except as provided in para. 1123.2.4(c).

(b) Cast irons, including ductile and malleable, shall not be used in pressure vessels and other equipment in para. 1100.1.2(b) and in proprietary items in para. 1100.1.2(e) except as provided in para. 1123.2.4(c).

(c) Cast irons including ductile and malleable are acceptable for use provided the safety of the material selection is demonstrated by one of the following:

(1) an established history of safe operation for similar parts or items operating under comparable service conditions

(2) a satisfactory proof test of prototype production parts or items under simulated service conditions

The designer is cautioned to give attention to the mechanical and impact loadings and low temperature limitations of cast irons.

1125 MATERIALS APPLIED TO MISCELLANEOUS PARTS

1125.3 Gaskets

Limitations on gasket materials are covered in para. 1108.4.

1125.4 Bolting

Limitations on bolting materials are covered in para. 1108.5.

Copyright ASME International
Provided by IHS under license with ASME
No reproduction or networking permitted without license from IHS
Not for Resale

(02)

Table 1123.1 Material Standards

Standard or Specification	Designation
Pipe	
Pipe, Steel, Black & Hot-Dipped, Zinc-Coated Welded & Seamless	ASTM A 53
Seamless Carbon Steel Pipe for High-Temperature Service	ASTM A 106
Pipe, Steel, Electric-Fusion (Arc)-Welded (Sizes NPS 16 and Over)	ASTM A 134
Electric-Resistance-Welded Steel Pipe	ASTM A 135
Electric-Fusion (Arc)-Welded Steel Pipe (NPS 4 and Over)	ASTM A 139
Seamless and Welded Steel Pipe for Low Temperature Service	ASTM A 333
Metal-Arc-Welded Steel Pipe for Use with High-Pressure Transmission Systems	ASTM A 381
Seamless Carbon Steel Pipe for Atmospheric and Lower Temperatures	ASTM A 524
General Requirements for Specialized Carbon and Alloy Steel Pipe	ASTM A 530
Electric-Fusion-Welded Steel Pipe for Atmospheric and Lower Temperatures	ASTM A 671
Electric-Fusion-Welded Steel Pipe for High-Pressure Service at Moderate Temperatures	ASTM A 672
Line Pipe	API 5L
Fittings, Valves, and Flanges	
Pipe Flanges and Flanged Fittings	ASME B16.5
Forgings, Carbon Steel, for Piping Components	ASTM A 105
Gray Iron Castings for Valves, Flanges, and Pipe Fittings	ASTM A 126
Forgings, Carbon Steel, for General-Purpose Piping	ASTM A 181
Forged or Rolled Alloy-Steel Pipe Flanges, Forged Fittings, and Valves and Parts for High-Temperature Service	ASTM A 182
Steel Castings, Carbon, Suitable for Fusion Welding, for High Temperature Service	ASTM A 216
Steel Castings, Martensitic Stainless and Alloy, for Pressure Containing Parts, Suitable for High-Temperature Service	ASTM A 217
Piping Fittings of Wrought Carbon Steel and Alloy Steel for Moderate and Elevated Temperatures	ASTM A 234
Forgings, Carbon and Low-Alloy Steel, Requiring Notch Toughness Testing for Piping Components	ASTM A 350
Ferritic Ductile Iron Pressure-Retaining Castings for Use at Elevated Temperatures	ASTM A 395
Piping Fittings of Wrought Carbon Steel and Alloy Steel for Low Temperature Service	ASTM A 420
Steel Castings Suitable for Pressure Service	ASTM A 487
Forgings, Carbon and Alloy Steel, for Pipe Flanges, Fittings, Valves, and Parts for High-Pressure Transmission Service	ASTM A 694
Wellhead Equipment	API 6A
Pipeline Valves, End Closures, Connectors and Swivels	API 6D
Steel Gate Valves, Flanged and Buttwelding Ends	API 600
Compact Carbon Steel Gate Valves	API 602
Class 150, Corrosion Resistant Gate Valves	API 603
Quality Standard for Steel Castings for Valves, Flanges and Fittings and Other Piping Components	MSS SP-55
Specification For High Test Wrought Welding Fittings	MSS SP-75
Bolting	
Alloy-Steel and Stainless Steel Bolting Materials for High-Temperature Service	ASTM A 193
Carbon and Alloy Steel Nuts for Bolts for High-Pressure and High-Temperature Service	ASTM A 194
Carbon Steel Externally Threaded Standard Fasteners	ASTM A 307
Alloy Steel Bolting Materials for Low-Temperature Service	ASTM A 320
High-Strength Bolts for Structural Steel Joints	ASTM A 325
Quenched and Tempered Alloy Steel Bolts, Studs, and Other Externally Threaded Fasteners	ASTM A 354
Quenched and Tempered Steel Bolts and Studs	ASTM A 449
Heat Treated Steel Structural Bolts, 150 ksi (1035 MPa) Minimum Tensile Strength	ASTM A 490
Structural Materials	
General Requirements for Rolled Steel Plates, Shapes, Sheet Piling, and Bars for Structural Use	ASTM A 6

Copyright ASME International
Provided by IHS under license with ASME
No reproduction or networking permitted without license from IHS
Not for Resale

Table 1123.1 Material Standards (Cont'd)

Standard or Specification	Designation
Structural Materials (Cont'd)	
General Requirements for Steel Plates for Pressure Vessels	ASTM A 20
General Requirements for Steel Bars, Carbon and Alloy, Hot-Wrought and Cold-Finished	ASTM A 29
Structural Steel	ASTM A 36
Pressure Vessel Plates, Alloy Steel, Manganese-Vanadium	ASTM A 225
High-Strength Low-Alloy Structural Steel	ASTM A 242
Low and Intermediate Tensile Strength Carbon Steel Plates, and Bars	ASTM A 283
Pressure Vessel Plates, Carbon Steel, Low- and Intermediate-Tensile Strength	ASTM A 285
High-Strength Low-Alloy Structural Manganese Vanadium Steel	ASTM A 441
Pressure Vessel Plates, Carbon Steel, Improved Transition Properties	ASTM A 442
General Requirements for Steel Sheet and Strip, Alloy, Hot-Rolled and Cold-Rolled	ASTM A 505
Steel Sheet and Strip, Alloy, Hot-Rolled and Cold-Rolled, Regular Quality	ASTM A 506
Steel Sheet and Strip, Alloy, Hot-Rolled and Cold-Rolled, Drawing Quality	ASTM A 507
High-Yield-Strength, Quenched and Tempered Alloy Steel Plate, Suitable for Welding	ASTM A 514
Pressure Vessel Plates, Carbon Steel, for Intermediate- and Higher-Temperature Service	ASTM A 515
Pressure Vessel Plates, Carbon Steel, for Moderate- and Lower-Temperature Service	ASTM A 516
Pressure Vessel Plates, Alloy Steel, High-Strength, Quenched and Tempered	ASTM A 517
Pressure Vessel Plates, Heat Treated, Carbon-Manganese-Silicon Steel	ASTM A 537
High-Strength Low-Alloy Columbium-Vanadium Steels of Structural Quality	ASTM A 572
Structural Carbon Steel Plates of Improved Toughness	ASTM A 573
Steel Bars, Carbon, Merchant Quality, M-Grades	ASTM A 575
Steel Bars, Carbon, Hot-Wrought, Special Quality	ASTM A 576
Normalized High-Strength Low-Alloy Structural Steel	ASTM A 633
Steel Bars, Carbon, Merchant Quality, Mechanical Properties	ASTM A 663
Steel Bars, Carbon, Hot-Wrought, Special Quality, Mechanical Properties	ASTM A 675
Miscellaneous	
Pipe Hangers and Support Materials, Design and Manufacture	MSS SP-58

GENERAL NOTE: Specific editions of standards incorporated in this Code by reference, and the names and addresses of the sponsoring organizations, are shown in Appendix A, since it is not practical to refer to a specific edition of each standard in Table 1123.1 and throughout the Code text. Appendix A will be revised at intervals as needed, and issued in the next edition of the Code.

Copyright ASME International
Provided by IHS under license with ASME
No reproduction or networking permitted without license from IHS
Not for Resale

CHAPTER IV
DIMENSIONAL REQUIREMENTS

1126 DIMENSIONAL REQUIREMENTS FOR STANDARD AND NONSTANDARD PIPING COMPONENTS (See Table 1126.1)

1126.1 Standard Piping Components

Certain material specifications listed in Table 1123.1 contain dimensional requirements which are requirements of para. 1126. Dimensions of piping components shall comply with these standards and specifications unless the provisions of para. 1126.2 are met.

1126.2 Nonstandard Piping Components

The dimensions for nonstandard piping components shall be such as to provide strength and performance equivalent to standard components or as provided under para. 1104. Wherever practical, these dimensions shall conform to those of comparable standard components.

1126.3 Threads

The dimensions of all piping connection threads not otherwise covered by a governing component standard or specification shall conform to the requirements of the applicable standards listed in Table 1123.1 (see para. 1114.1).

Copyright ASME International
Provided by IHS under license with ASME
No reproduction or networking permitted without license from IHS
Not for Resale

Table 1126.1 Dimensional Standards (02)

Standard or Specification	Designation
Pipe	
Welded and Seamless Wrought Steel Pipe	ASME B36.10M
Stainless Steel Pipe	ASME B36.19M
Line Pipe (*Combination of former API Spec. 5L, 5LS, and 5LX*)	API 5L
Fittings, Valves, and Flanges	
Pipe Flanges and Flanged Fittings	ASME B16.5
Factory-Made Wrought Steel Buttwelding Fittings	ASME B16.9
Face-to-Face and End-to-End Dimensions of Valves	ASME B16.10
Metallic Gaskets for Pipe Flanges — Ring Joint, Spiral-Wound, and Jacketed	ASME B16.20
Nonmetallic Flat Gaskets for Pipe Flanges	ASME B16.21
Buttwelding Ends	ASME B16.25
Wrought Steel Buttwelding Short Radius Elbows and Returns	ASME B16.28
Wellhead Equipment	API 6A
Pipeline Valves, End Closures, Connectors and Swivels	API 6D
Steel Gate Valves, Flanged and Buttwelding Ends	API 600
Compact Carbon Steel Gate Valves	API 602
Class 150, Corrosion Resistant Gate Valves	API 603
Standard Finishes for Contact Faces of Pipe Flanges and Connecting-End Flanges of Valves and Fittings	MSS SP-6
Standard Marking System for Valves, Fittings, Flanges and Unions	MSS SP-25
Steel Pipe Line Flanges	MSS SP-44
Pressure Testing of Steel Valves	MSS SP-61
Butterfly Valves	MSS SP-67
Cast Iron Gate Valves, Flanged and Threaded Ends	MSS SP-70
Cast Iron Swing Check Valves, Flanged and Threaded Ends	MSS SP-71
Specification for High Test Wrought Welding Fittings	MSS SP-75
Cast Iron Plug Valves, Flanged and Threaded Ends	MSS SP-78
Miscellaneous	
Unified Inch Screw Threads (UN and UNR Thread Form)	ASME B1.1
Pipe Threads, General Purpose (Inch)	ASME B1.20.1
Dry Seal Pipe Threads (Inch)	ASME B1.20.3
Threading, Gaging, and Thread Inspection of Casing, Tubing, and Line Pipe Threads	API 5B
Pipe Hangers and Supports—Selection and Application	MSS SP-69

GENERAL NOTE: Specific editions of standards incorporated in this Code by reference, and the names and addresses of the sponsoring organizations, are shown in Appendix A, since it is not practical to refer to a specific edition of each standard in Table 1126.1 and throughout the Code text. Appendix A will be revised at intervals as needed, and issued in the next edition of the Code.

Copyright ASME International
Provided by IHS under license with ASME
No reproduction or networking permitted without license from IHS
Not for Resale

CHAPTER V
CONSTRUCTION, WELDING, AND ASSEMBLY

1134 CONSTRUCTION

1134.1 General

New construction and replacements of existing systems shall be in accordance with the requirements of this Chapter. Where written specifications are required, they shall be in sufficient detail to ensure that the requirements of this Code shall be met. Such specifications shall include specific details on handling of pipe, equipment, materials, welding, and all construction factors which contribute to safety and sound engineering practice. It is not intended herein that all construction items be covered in full detail, since the specification should be all-inclusive. Whether covered specifically or not, all construction and materials shall be in accordance with good engineering, safety, and sound construction methods and techniques.

1134.2 Inspection

The operating company shall make provisions for suitable inspection of pipeline and related facilities by qualified inspectors to assure compliance with the construction specifications. Qualification of inspection personnel and the type and extent of inspection shall be in accordance with the requirements of para. 1136. Repairs required during new construction shall be in accordance with paras. 1134.5, 1134.8, and 1161.1.2.

1134.3 Right of Way

1134.3.1 Location. Right of way should be selected so as to minimize the probability of encroachment from future industrial or urban development.

1134.3.2 Construction Requirements. Inconvenience to the landowner should be held to a minimum, and safety of the public shall be given prime consideration.

(a) All blasting shall be in accordance with governing regulations, shall be performed by competent and qualified personnel, and shall be performed so as to provide adequate protection to the general public, livestock, wildlife, buildings, telephone, telegraph and power lines, underground structures, and any other property in the proximity of the blasting.

(b) In grading the right of way, every effort shall be made to minimize damage to the land and prevent abnormal drainage and erosive conditions. The land is to be restored to as near the original condition as is practical.

(c) In constructing pipeline crossings of railroads, highways, streams, lakes, rivers, etc., safety precautions, such as signs, lights, guardrails, etc., shall be maintained in the interest of public safety. The crossings shall comply with the applicable rules, regulations, and restrictions of regulatory bodies having jurisdiction.

1134.3.3 Survey and Marking. The route shall be surveyed and marked, and such marking shall be maintained as long as necessary during construction.

1134.4 Handling, Hauling, Stringing, and Storing

Care shall be exercised in handling or storing of pipe, casing, coating materials, valves, fittings, and other materials to prevent damage. When applicable, railroad or marine transportation of pipe shall meet the requirements of API RP 5L1, API RP 5L5, and API RP 5L6. In the event pipe is yard coated or mill coated, adequate precautions shall be taken to prevent damage to the coating when hauling, lifting, and placing on the right of way. Pipe shall not be allowed to drop and strike objects which will distort, dent, flatten, gouge, or notch the pipe or damage the coating, but shall be lifted or lowered by suitable and safe equipment.

1134.5 Damage to Fabricated Items and Pipe

(a) Fabricated items, such as scraper traps, manifolds, volume chambers, etc., shall be inspected before assembly into the mainline or manifolding, and injurious defects shall be repaired in accordance with provisions of the standard or specifications applicable to their manufacture.

(b) Pipe shall be inspected before coating and before assembly into the mainline or manifolding. Distortion, buckling, denting, flattening, gouging, grooves, or notches, and all harmful defects of this nature shall be prevented, repaired, or removed as specified herein.

(1) Injurious gouges, grooves, or notches shall be removed or repaired by the use of welding procedures prescribed in API 5L and 5LU; or by grinding, provided the resulting wall thickness is not less than that permitted by the material specification.

(2) When conditions outlined in (b)(1) cannot be met, the damaged portion shall be removed as a cylinder. Insert patching is not permitted. Weld-on patching, other than complete encirclement, is not permitted in pipelines intended to operate at a hoop stress of more than 20% of the specified minimum yield strength of the pipe.

Copyright ASME International
Provided by IHS under license with ASME
No reproduction or networking permitted without license from IHS
Not for Resale

Table 1134.6(a) Minimum Cover for Buried Pipelines

Location	For Normal Excavation, in. (mm)	For Rock Excavation Requiring Blasting or Removal by Equivalent Means, in. (mm)
Industrial, commercial, and residential areas	36 (914)	24 (610)
River and stream crossings	48 (1 219)	18 (457)
Drainage ditches at roadways and railroads	36 (914)	24 (610)
Any other area	30 (762)	18 (457)

(3) Notches or laminations on pipe ends shall not be repaired. The damaged end shall be removed as a cylinder and the pipe end properly rebeveled.

(4) Distorted or flattened lengths shall be discarded.

(5) A dent (as opposed to a scratch, gouge, or groove) may be defined as a gross disturbance in the curvature of the pipe wall. A dent containing a stress concentrator, such as a scratch, gouge, groove, or arc burn, shall be removed by cutting out the damaged portion of the pipe as a cylinder.

(6) All dents which affect the curvature of the pipe at the seam or at any girth weld shall be removed as in (b)(5). All dents that exceed a maximum depth of $\frac{1}{4}$ in. (6 mm) in pipe NPS 12 and smaller or exceed 2% of the nominal pipe diameter in sizes greater than NPS 12, in pipelines intended to operate at a hoop stress of more than 20% of the specified minimum yield strength of the pipe, shall be eliminated. Insert patching, overlay, or pounding out of dents shall not be permitted in pipelines intended to operate at a hoop stress of more than 20% of the specified minimum yield strength of the pipe.

(7) Buckled pipe shall be replaced as a cylinder.

1134.6 Ditching

(a) Depth of the ditch shall be appropriate for the route location, surface use of land, terrain features, and load imposed by roadways and railroads. All buried pipelines shall be installed below the normal level of cultivation, and consideration should be given to the depth of the frost line. A minimum cover not less than that shown in Table 1134.6(a) shall be provided except where the cover provisions of Table 1134.6(a) cannot be met. Pipe may be installed with less cover if additional protection is provided to withstand anticipated external loads and to minimize damage to the pipe by external forces.

(b) Width and grade of the ditch shall provide for lowering of the pipe into the ditch to minimize damage to the coating and to facilitate fitting the pipe to the ditch.

(c) Location of underground structures intersecting the ditch route shall be determined in advance of construction activities to prevent damage to such structures. A minimum clearance of 12 in. (305 mm) shall be provided between the outside of any buried pipe or component and the extremity of any other underground structure, except for

(1) drainage tile, which shall have a minimum clearance of 2 in. (51 mm)

(2) as permitted under para. 1161.1.1(d)

(d) Ditching operations shall follow good pipeline practice and consideration of public safety. API RP 1102 provides guidance.

1134.7 Bends and Elbows

Changes in direction, including sags or overbends required to conform to the contour of the ditch, may be made by bending the pipe or using factory-made bends or elbows. (See limitations in para. 1106.2.)

1134.7.1 Bends Made From Pipe

(a) Bends shall be made from pipe having wall thicknesses determined in accordance with para. 1104.2.1. When hot bends are made in pipe which has been cold worked in order to meet the specified minimum yield strength, wall thicknesses shall be determined by using the lower stress values in accordance with para. 1102.3.1(d).

(b) Bends shall be made in such a manner as to preserve the cross-sectional shape of the pipe, and shall be free from buckling, cracks, or other evidence of mechanical damage. The pipe diameter shall not be reduced at any point by more than 6% of the nominal diameter, and the completed bend shall pass the specified sizing pig.

(c) The minimum radius of field cold bends shall be as specified in para. 1106.2.1(b).

(d) Tangents approximately 6 ft (1829 mm) in length are preferred on both ends of cold bends.

1134.7.2 Factory-Made Bends and Elbows

(a) Factory-made wrought steel welding bends and factory-made elbows may be used subject to the limitations in para. 1106.2.3, and transverse segments cut therefrom may be used for changes in direction provided the arc distance measured along the crotch is at least 2 in. (51 mm) on pipe size NPS 4 and larger.

(b) If the internal diameter of such fittings differs by more than $\frac{3}{16}$ in. (5 mm) from that of the pipe, the fittings

Copyright ASME International
Provided by IHS under license with ASME
No reproduction or networking permitted without license from IHS
Not for Resale

shall be treated as indicated in Fig. 1134.8.6(a)-(2) or use a transition nipple not less than one-half pipe diameter in length with acceptable joint designs as illustrated in Fig. 1134.8.6(a)-(1).

1134.8 Welding

1134.8.1 General

(a) Scope. Welding herein applies to the arc and gas welding of pipe joints in both wrought and cast steel materials as applied in pipelines and connections to apparatus or equipment. This includes butt joints in the installation of pipe, valves, flanges, fittings, and other equipment, and fillet welded joints in pipe branches, slip-on flanges, etc. It does not apply to the welding of longitudinal or spiral joints in the manufacture of pipe and fittings.

(b) Welding Terms. Definitions pertaining to welding as used in this Code conform to the standard definitions established by the American Welding Society and contained in ANSI/AWS A3.0 and API 1104.

(c) Safe Practices in Cutting and Welding. Cutting and welding shall begin only when safe conditions are indicated.

1134.8.2 Welding Processes and Filler Metal

(a) Welding shall be done by shielded metal arc welding, submerged arc welding, gas tungsten arc welding, gas metal arc welding, or oxyacetylene welding process using a manual, semiautomatic, or automatic welding technique, or a combination of these techniques.

(b) Filler metal shall comply with the requirements of API 1104.

1134.8.3 Welding Qualifications

(a) Prior to any welding covered by this Code, a welding procedure suitable for providing sound and ductile welds, and each welder or welding operator, shall be qualified under API 1104 or Section IX of the ASME Boiler and Pressure Vessel Code. The qualified welding procedure shall specify the preheating and stress relieving practices that are to be followed when materials or weather conditions make either or both of them necessary. The welding procedure shall be adhered to during the welding performed under this Code.

(b) API 1104 and Section IX of the ASME Boiler and Pressure Vessel Code contain sections entitled "Essential Variables" which are applicable to welding procedures and also to welders. These sections shall be followed except that, for the purposes of this Code, all carbon steels which have a carbon content not exceeding 0.32% (heat analysis) and a carbon equivalent (C + $\frac{1}{4}$ Mn) not exceeding 0.65% (heat analysis) are considered to come under material grouping P-No. 1. Alloy steels having weldability characteristics demonstrated to be similar to these carbon steels shall be welded, preheated, and stress relieved as prescribed for such carbon steels in paras. 1134.8.8 and 1134.8.9. Other alloy steels shall be welded, preheated, and stress relieved as prescribed in the ASME Boiler and Pressure Vessel Code, Section VIII, Division 1, and Section IX.

(c) Welder requalification tests shall be required if there is some specific reason to question a welder's ability or the welder is not engaged in a given process of welding (i.e., arc or gas) for a period of 6 months or more.

(d) Qualification Records. The welding procedure followed during the qualifying tests shall be recorded in detail. Records of the tests that establish the qualification of a welding procedure shall be retained as long as that procedure is in use. A record of the qualified welders, showing the date and results of the tests, shall be retained during the construction involved and for 6 months thereafter.

(e) The operating company shall be responsible for qualification of procedures and welders.

1134.8.4 Welding Standards. All the welding done under this Code shall be performed under a specification which embodies the minimum requirements of this Code and shall encompass the requirements of API 1104, except as provided in paras. 1134.8.3(a) and (b).

1134.8.5 Welding Quality

(a) Inspection Methods

(1) The quality of welding shall be checked by nondestructive methods or by removing completed welds as selected and designated by the inspector for destructive testing.

(2) Nondestructive inspection shall consist of radiographic examination or other acceptable nondestructive methods. The method used shall produce indications of defects which can be accurately interpreted and evaluated. Radiographic examination, when employed, shall meet requirements under Radiographic Procedure in API 1104. The welds shall be evaluated on the basis of para. 1134.8.5(b). Films shall be retained during the construction involved and for 6 months thereafter.

(3) To be acceptable, completed welds which have been removed for destructive examination shall meet the requirements of API 1104 for Welder Qualification by Destructive Testing. Trepanning methods of testing shall not be used.

(4) When the pipeline is to be operated at a hoop stress of more than 20% of the specified minimum yield strength of the pipe, a minimum of 10% of each day's girth welds, selected at random by the operating company, shall be inspected by radiographic or other accepted nondestructive methods (visual inspection excepted) for 100% of the circumference, except in the following locations, where 100% of the girth welds shall be inspected by radiographic or other accepted nondestructive methods (visual inspection excepted)

(a) within populated areas, such as residential subdivisions, shopping centers, and designated commercial and industrial areas

Copyright ASME International
Provided by IHS under license with ASME
No reproduction or networking permitted without license from IHS
Not for Resale

(b) river, lake, and stream crossings within an area subject to frequent inundation; and river, lake, and stream crossings on bridges

(c) railroad or public highway rights of way, including tunnels, bridges, and overhead railroad and road crossings

(d) offshore and inland coastal waters

(e) old girth welds in used pipe

(f) tie-in girth welds not hydrostatically tested in accordance with para. 1137.4.1

(b) Standards of Acceptability. Standards of acceptability for inadequate penetration and incomplete fusion, burn-through, slag inclusions, porosity or gas pockets, cracks, accumulation of discontinuities, and undercutting, as set forth under Standards of Acceptability—Nondestructive Testing in API 1104, are applicable to the determination of the size and type of defects located by visual inspection, radiography, or other nondestructive methods. They shall not be used to determine the quality of welds that are subjected to destructive testing.

1134.8.6 Types of Welds, Joint Designs, and Transition Nipples

(a) Butt Welded Joints. Butt welds may be made by manual or automatic welding processes. The transition between ends of unequal thickness may be accomplished by taper or welding as shown in Fig. 1134.8.6(a)-(2), or by means of a prefabricated transition nipple not less than one-half pipe diameter in length with acceptable joint designs as illustrated in Fig. 1134.8.6(a)-(1) or as compatible with the welding system.

(1) Manual. Manually welded joints may be of the single vee, double vee, or other suitable type of groove. Joint designs shown in Fig. 1134.8.6(a)-(1) or applicable combinations of these joint design details are recommended for ends of equal thickness.

(2) Automatic. Automatically welded joints may be of various configurations of joint design suitable for the welding process, pipe grade, and wall thickness.

(b) Fillet Welds. Fillet welds may be concave to slightly convex. The size of a fillet weld is stated as a leg length of the largest inscribed right isosceles triangle as shown in Fig. 1134.8.6(b) covering recommended attachment details of flanges.

(c) Tack Welds. Tack welding, as for all other welding, shall be done by qualified welders.

1134.8.7 Removal or Repair of Defects

(a) Weld Defects. Authorization for repair of welds, removal and repair of weld defects, and testing of weld repairs shall be in accordance with API 1104.

(b) Pipe Defects. Laminations, split ends, or other defects in the pipe shall be repaired or removed in accordance with para. 1134.5(b).

1134.8.8 Preheating and Interpass Temperature

(a) Carbon steels having a specified carbon content in excess of 0.32% (heat analysis) or a carbon equivalent (C + ¼ Mn) in excess of 0.65% (heat analysis) shall be preheated. Preheating may also be required for steels having lower carbon or carbon equivalent when conditions exist that either limit the welding technique that can be used, or tend to adversely affect the quality of the weld. Interpass temperature control may also be required, whereby the base material is maintained at a specified temperature for the fusing of beads other than the stringer bead.

(b) When welding dissimilar materials having different preheating requirements, the material requiring the higher preheat shall govern.

(c) Preheating may be accomplished by any suitable method, provided that it is uniform and that the temperature does not fall below the prescribed minimum during the actual welding operations.

(d) The preheating temperature shall be checked by the use of temperature indicating crayons, thermocouple pyrometers, or other suitable method to assure that the required temperature is obtained prior to, and maintained during, the welding operation.

1134.8.9 Stress Relieving

(a) Welds in all carbon steels shall be stress relieved when the wall thickness exceeds 1 ¼ in. (32 mm). Welds in carbon steels in thickness above 1 ¼ in. (32 mm) up to and including 1 ½ in. (38 mm) may be exempted from stress relieving if a minimum preheating temperature of 200°F (93°C) is used. When the welded joint connects parts that are of different thicknesses but of similar materials, the thickness to be used to determine the stress relieving requirements shall be the thicker of the two parts joined; or in the case of branch connections or slip-on flanges, the thickness of the pipe or header.

(b) In welds between dissimilar materials, if either material requires stress relieving, the joint shall require stress relieving.

1134.9 Tie-In

Gaps left in the continuous line construction at such points as river, canal, highway, or railroad crossings require special consideration for alignment and welding. Sufficient equipment shall be available and care exercised not to force or strain the pipe to proper alignment.

1134.10 Installation of Pipe in the Ditch

It is very important that stresses introduced into the pipeline by construction be minimized. The pipe shall fit the ditch without the use of external force to hold it in place until the backfill is completed. When the pipe is lowered into the ditch, care shall be exercised so as not to impose undue stress in the pipe. Slack loops may be used where laying conditions render their use advisable.

1134.11 Backfilling

Backfilling shall be performed in a manner that provides firm support of the pipe. When there are large

Copyright ASME International
Provided by IHS under license with ASME
No reproduction or networking permitted without license from IHS
Not for Resale

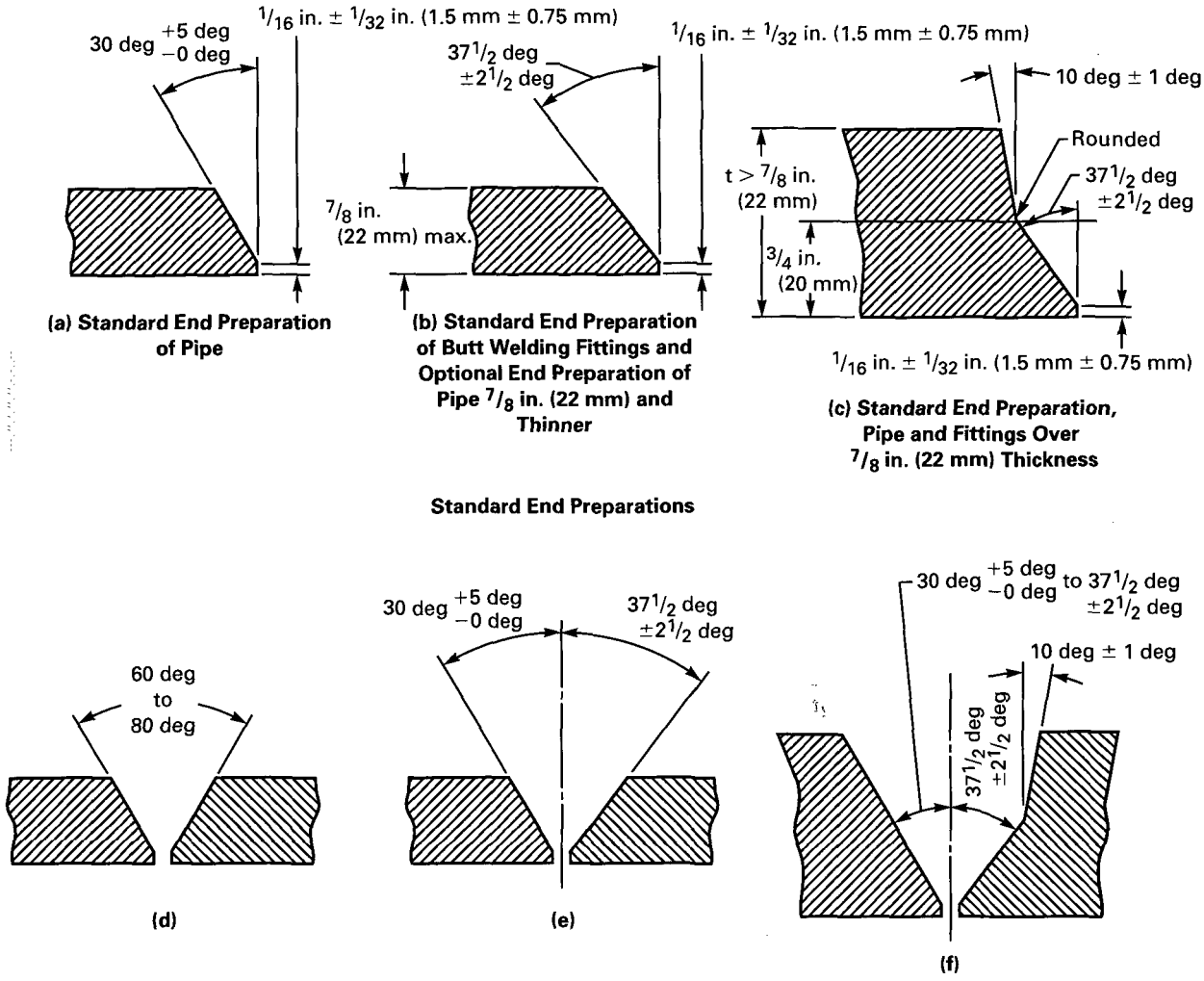

Fig. 1134.8.6(a)-(1) Acceptable Butt Welded Joint Design for Equal Wall Thickness

rocks in the backfill material, care shall be exercised to prevent damage to the pipe and coating by such means as the use of a rock shield material, or by filling initially with a rock-free material sufficient to prevent rock damage. Where the ditch is flooded, care shall be exercised so that the pipe is not floated from the bottom of the ditch prior to backfill completion.

1134.12 Restoration of Right of Way and Cleanup

These operations shall follow good construction practices and consideration of private and public safety.

1134.13 Special Crossings

Water, railroad, and highway crossings require specific considerations not readily covered in a general statement since all involve variations in basic design. The pipeline company shall obtain required permits for such crossings. The design shall employ sound engineering and good pipeline practice with minimum hazard to the facility and due consideration of public safety. Construction shall be so organized as to result in minimal interference with traffic or the activities of adjacent property owners.

1134.13.1 Water Crossings. Crossings of rivers, streams, lakes, and inland bodies of water are individual problems, and the designer shall investigate composition of bottom, variation in banks, velocity of water, scouring, and special seasonal problems. The designer shall determine whether the crossing is to be underwater, overhead on a suspension bridge, or supported on an adjacent bridge. Continuity of operation and the safety of the general public shall be the controlling factors both in design and in construction. Where required, detailed plans and specifications shall be prepared that

Copyright ASME International
Provided by IHS under license with ASME
No reproduction or networking permitted without license from IHS
Not for Resale

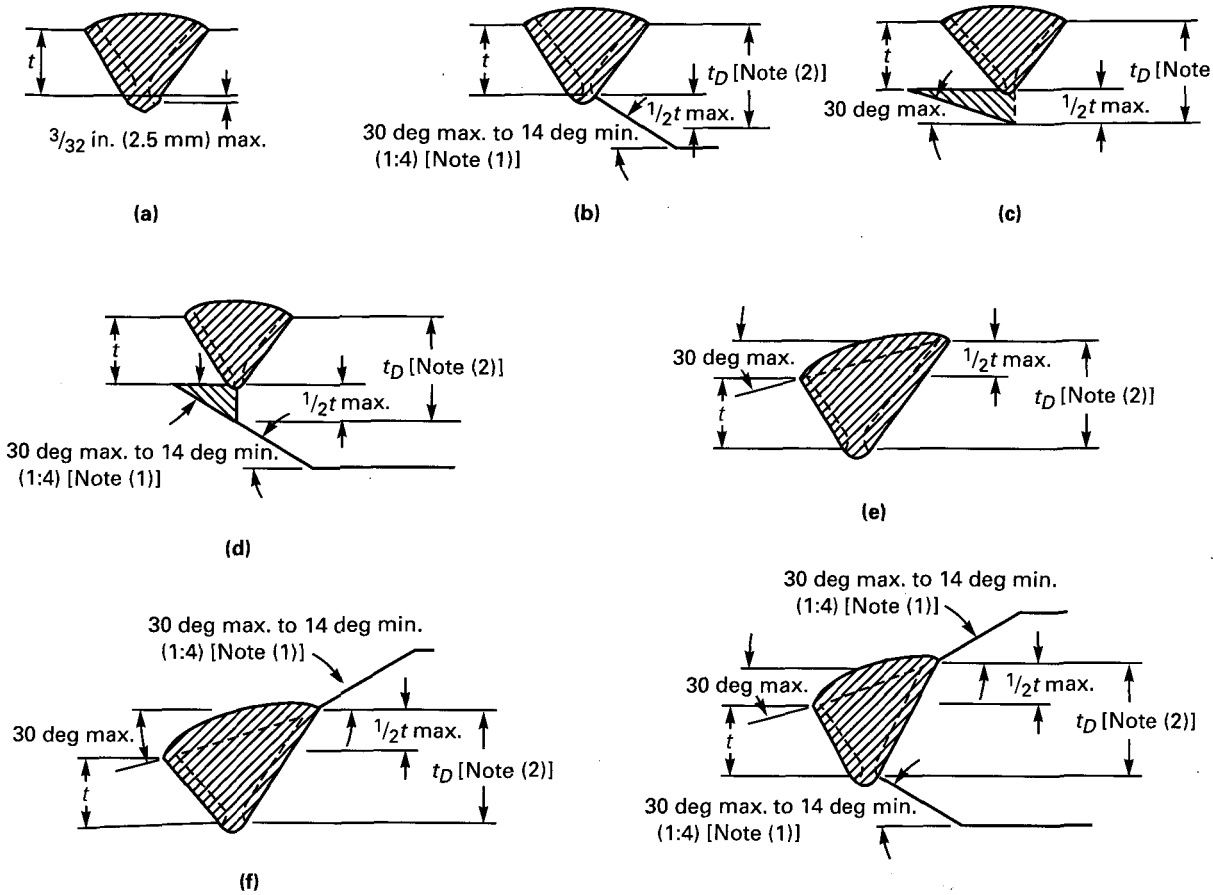

GENERAL NOTES:

(a) The sketches in Fig. 1134.8.6(a)–(2) illustrate acceptable prepartions for joining pipe ends having unequal wall thicknesses and/or meterials of unequal specified minimum yield strength by butt welding.

(b) The wall thickness of the pipes to be joined, beyond the joint design area, shall comply with the design requirements of this Code.

(c) When the specified minimum yield strengths of the pipes to be joined are unequal, the deposited weld metal shall have mechanical properties at least equal to those of the pipe having the higher strength.

(d) The transition between ends of unequal thickness may be accomplished by taper or welding as illustrated or by means of a prefabricated transition nipple not less than one-half of the pipe diameter in length.

(e) Sharp notches or grooves at the edge of the weld where it joins a slanted surface shall be avoided.

(f) For joining pipes of unequal wall thicknesses and equal specified minimum yield strengths, the rules given herein apply, except there is no minimum angle limit to the taper.

(g) Excessive root pass penetration and other internal surface irregularities should be minimized, as they are turbulence inducers whcih can cause accelerated downstream localized erosion, particularly in abrasive slurry systems (see para. 1101.9).

(h) *For Unequal Internal Diameters*

(1) If the nominal wall thicknesses of the adjoining pipe ends do not vary more than $^3/_{32}$ in. (2.5 mm), no special treatment is necessary provided full penetration and bond is accomplished in welding. See sketch (a).

(2) Where the nominal internal offset is more than $^3/_{32}$ in. (2.5 mm) and there is no access to the inside of the pipe for welding, the transition shall be made by a taper cut on the inside end of the thicker pipe. See sketch (b). The taper angle shall not be greater than 30 deg nor less than 14 deg.

(3) For hoop stresses of more than 20% of the specified minimum yield strength of the pipe, where the nominal internal offset is more than $^3/_{32}$ in. (2.5 mm) but does not exceed one-half the wall thickness of the thinner pipe, and there is access to the inside of the pipe for welding, the transition may be made with a tapered weld. See Sketch (c) The land on the the thicker pipe shall be equal to the offset plus the land on the abutting pipe.

(4) Where the nominal internal offset is more than one-half the wall thickness of the thinner pipe, and there is access to the inside of the pipe for welding, the transition may be made with a taper cut on the inside end of the thicker pipe [see sketch (b)], or by a combination taper weld to one-half the wall thickness of the thinner pipe and a taper cut from that point [see sketch (d)].

Fig. 1134.8.6(a)-(2) Acceptable Butt Welded Joint Design for Unequal Wall Thickness

Copyright ASME International
Provided by IHS under license with ASME
No reproduction or networking permitted without license from IHS
Not for Resale

Notes to Fig. 1134.8.6(a)-(2) (Cont'd)

(i) *For Unequal External Diameters*

(1) Where the external offset does not exceed one-half the wall thickness of the thinner pipe, the transition may be made by welding [see sketch (e)], provided the angle of the rise of the weld surface does not exceed 30 deg and both bevel edges are properly fused.

(2) Where there is an external offset exceeding one-half the wall thickness of the thinner pipe, that portion of the offset over one-half the wall thickness of the thinner pipe shall be tapered. See sketch (f).

(j) *Internal and External Diameters*

(1) Where there is both an internal and an external offset, the joint design shall be a combination of sketches (a) to (f). See sketch (f). Particular attention shall be paid to proper alignment under these conditions.

NOTES:

(1) No minimum when materials joined have equal yield strength [see General Note (f)].

(2) Maximum thickness t_D for design purposes shall not be greater than $1.5t$.

take into account these and any special considerations or limitations imposed by the regulatory body involved.

(a) Underwater Construction. Plans and specifications shall describe the position of the line showing relationship of the pipeline to the natural bottom and the depth below mean low water level when applicable. To meet the conditions set out in para. 1134.13.1, heavier wall pipe may be specified. Approach and position of the line in the banks is important, as is the position of the line across the bottom. Special consideration shall be given to depth of cover and other means of protecting the pipeline in a surf zone. Special consideration shall be given to protective coating, the use of concrete jacketing, or the application of river weights. Complete inspection shall be provided. Precautions shall be taken during construction to limit stress below the level that would produce buckling or collapse due to out-of-roundness of the completed pipeline.

1134.13.2 Overhead Structures. Overhead structures used to suspend pipelines shall be designed and constructed on the basis of sound engineering and within the restrictions or regulations of the governing body having jurisdiction. Detailed plans and specifications shall be prepared where required, and adequate inspection shall be provided to assure complete adherence thereto.

1134.13.3 Bridge Attachments. Special requirements are involved in this type of crossing. The use of higher strength lightweight steel pipe, proper design and installation of hangers, and special protection to prevent damage by the elements, bridge, and approach traffic shall be considered. Any agreed upon restrictions or precautions shall be contained in the detailed specifications. Inspectors shall assure themselves that these requirements are met.

(02) **1134.13.4 Railroad and Highway Crossings**

(a) The safety of the general public and the prevention of damage to the pipeline by reason of its location are primary considerations. The great variety of such crossings precludes standard design. The construction specifications shall cover the procedure for such crossings, based upon the requirements of the specific location.

(b) Installation of uncased carrier pipe is preferred. Installation of carrier pipe, or casing if used, shall be in accordance with API RP 1102. As specified in para. 1161.1.2(f), if casing is used, coated carrier pipe shall be independently supported outside each end of the casing and insulated from the casing throughout the cased section, and casing ends shall be sealed using a durable, electrically nonconductive material.

(c) The sum of the circumferential stresses due to internal design pressure and external load in pipe installed under railroads or highways without use of casing shall not exceed the allowable circumferential stresses noted in para. 1102.3.2(e).

1134.14 Offshore and Inland Coastal Water Construction

Plans and specifications shall describe alignment of the pipeline, depth below mean water level, and depth below bottom if ditched. Special consideration shall be given to depth of cover and other means of protecting the pipeline in the surf zone. Consideration shall be given to use of weight coating(s), anchors, or other means of maintaining position of the pipe under anticipated conditions of buoyance and water motion. Complete construction inspection shall be provided. Precautions shall be taken during construction to limit stress below the level that would produce buckling or collapse due to out-of-roundness of the completed pipeline. API RP 1111 may be used as a guide.

1134.15 Block and Isolating Valves

1134.15.1 General

(a) Installation of block and isolating valves shall be considered to facilitate operation and maintenance of the pipeline system.

(b) Valves shall be at accessible locations to permit isolation of the piping system and shall be protected from possible damage or tampering. Where an operating device to open or close the valve is provided, it shall be protected and be accessible only to authorized persons.

(c) Stresses in pipe caused by differential settlement or movement of the valve or attached piping shall be limited to levels defined in para. 1102.3.

Copyright ASME International
Provided by IHS under license with ASME
No reproduction or networking permitted without license from IHS
Not for Resale

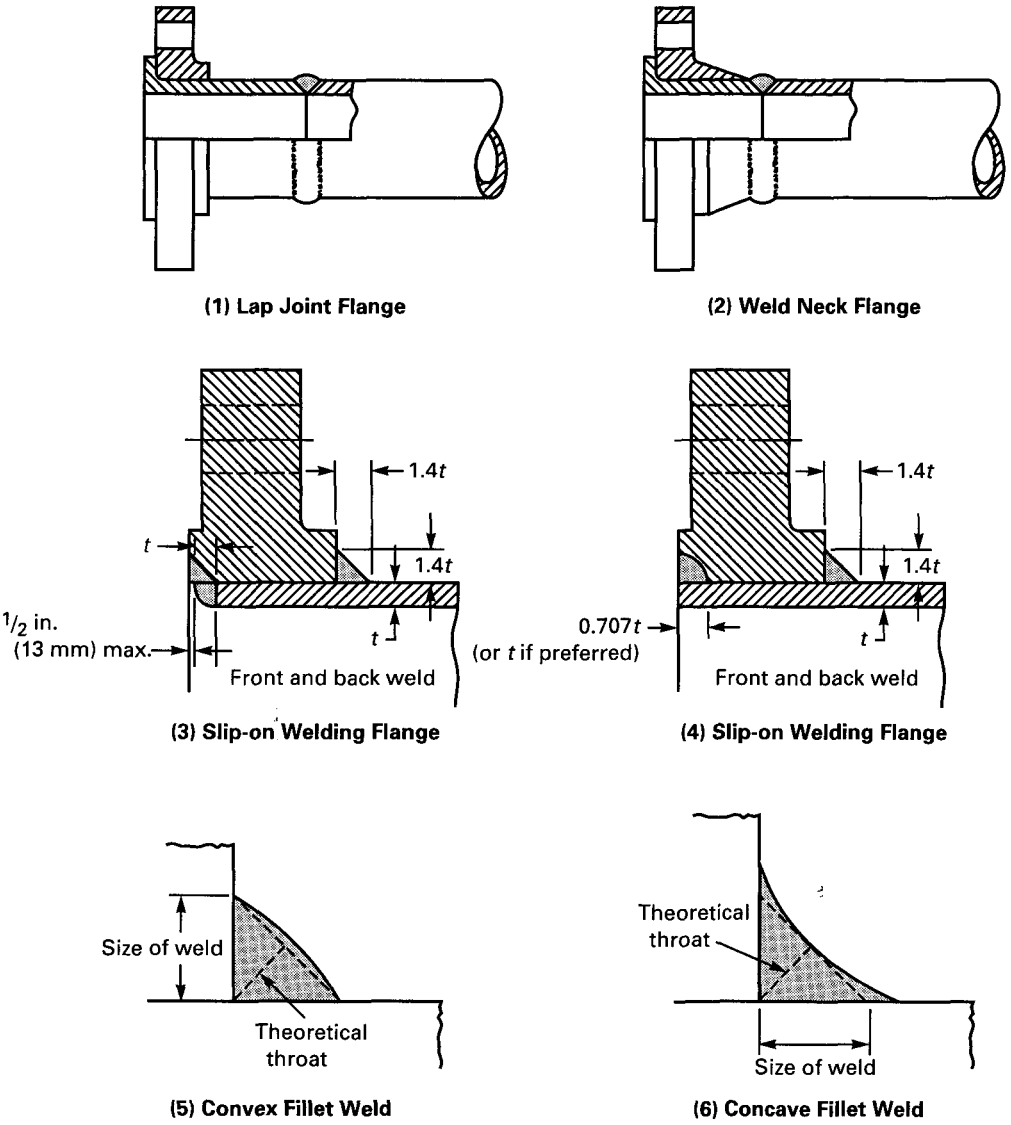

Fig. 1134.8.6(b) Recommended Attachment Details of Flanges

(d) Valves shall be marked or spotted by survey techniques to facilitate quick location when operation is required.

1134.15.2 Mainline Valves

(a) Mainline block valves shall be installed on the upstream side of major river crossings and public water supply reservoirs. Either a block or check valve shall be installed on the downstream side of major river crossings and public water supply reservoirs.

(b) Mainline block valves should be installed as required for maintenance and operating purposes or as otherwise dictated consistent with the type of slurry being transported.

1134.16 Connections to Main Lines

Where connections to the main line, such as branch lines, jump-overs, relief valves, air vents, etc., are made to the main line, they shall be made in accordance with para. 1104.3.1. When such connections or additions are made to coated lines, all damaged coating shall be removed and replaced with new coating material in accordance with para. 1161.1.2(h). This protective coating should include the attachments.

1134.17 Scraper Traps

(a) Scraper traps are to be installed as deemed necessary for good operations. All pipe, valves, fittings, closures, and appurtenances shall comply with appropriate sections of this Code.

(b) Scraper traps on mainline terminations and tied into connection piping or manifolding shall be anchored below ground with adequate concrete anchors when

Copyright ASME International
Provided by IHS under license with ASME
No reproduction or networking permitted without license from IHS
Not for Resale

required and suitably supported above ground to prevent transmission of line stresses due to expansion and contraction to connecting facilities.

(c) Scraper trap and its components shall be assembled in accordance with para. 1135 and pressure tested to the same limits as the main line. See para. 1137.4.

1134.18 Line Markers

Adequate pipeline location markers indicating caution for the protection of the pipeline, the public, and persons performing work in the area shall be installed over each line on each side of a public road, railroad, and navigable water crossing. Markers are not required for pipelines offshore. API RP 1109 may be used for guidance.

1134.19 Corrosion-Erosion Control

Protection of ferrous pipe and components from external corrosion and internal corrosion-erosion shall be as prescribed in Chapter VIII.

1134.20 Pump Station and Terminal Construction

1134.20.1 General. All construction work performed on pump stations, terminals, equipment installations, piping, and allied facilities shall be done under construction specifications. Such specifications shall cover all phases of the work under contract and shall be in sufficient detail to ensure that the requirements of this Code shall be met. Such specifications shall include specific details on soil conditions, foundations and concrete work, steel fabrication and building erection, piping, welding, equipment and materials, and all construction factors contributing to safety and sound engineering practice.

1134.20.2 Location. Pump stations and terminals should be located on the pipeline owner's fee or leased property to assure that proper safety precautions may be applied. Sufficient open space shall be provided for access of maintenance and safety equipment. The station or terminal should be fenced in such a manner as to minimize trespass. Roadways and gates should be located to give ready ingress to and egress from the facilities.

1134.20.3 Building Installation. Buildings shall be located and constructed to comply with detailed plans and specifications. The excavation for and installation of foundations and erection of the building shall be done by craftsmen familiar with the respective phase of the work, and all work shall be done in a safe and workmanlike manner. Inspection shall be provided to assure that the requirements of the plans and specifications are met.

1134.20.4 Pumping Equipment and Prime Movers. Installation of pumping equipment and prime movers shall be covered by detailed plans and specifications that have taken into account the variables inherent in local soil conditions, and utilization and arrangement of the equipment to provide the optimum in operating ease and maintenance access. Machinery shall be handled and mounted in accordance with recognized good practice and be provided with such protective covers as to prevent damage during construction. Recommendations of installation details provided by manufacturers for auxiliary piping, setting, and aligning shall be considered.

1134.20.5 Pump Station and Terminal Piping. All piping, including, but not limited to, main unit interconnections, manifolds, scraper traps, etc., which can be subject to the mainline pressure shall be constructed in accordance with this Code.

1134.20.6 Controls and Protective Equipment. Pressure controls and protective equipment, including pressure limiting devices, regulators, controllers, relief valves, and other safety devices, as shown on the drawings or required by the specifications, shall be installed by competent and skilled workers. Installation shall be accomplished with careful handling and minimum exposure of instruments and devices to inclement weather conditions, dust, or dirt to prevent damage. Also, piping, conduits, or mounting brackets shall not cause the instruments or devices to be distorted or to be in any strain. Instruments and devices shall be installed so that they can be checked without undue interruptions in operations. After installation, controls and protective equipment shall be tested under conditions approximating actual operations to assure their proper functioning.

1134.20.7 Fire Protection. Fire protection, when provided, shall be in accordance with good engineering practice. If the system installed requires the services of fire pumps, their motive power shall be separate from the station power so that their operations will not be affected by emergency shutdown facilities.

1134.21 Tankage and Holding Ponds

1134.21.1 General. All construction work performed on storage, holding ponds, and working tankage, and allied equipment, piping, and facilities shall be done under construction specifications. Such specifications shall cover all phases of the work under contract and shall be in sufficient detail to ensure that the requirements of the Code shall be met. Such specifications shall include specific details on soil conditions, foundations and concrete work, tank fabrication and erection, piping, welding, equipment and materials, dikes, and all construction factors contributing to safety and sound engineering practice.

1134.21.2 Location. Tankage or holding ponds should be located on the pipeline owner's fee or leased property to assure that proper safety precautions may be applied. Sufficient open space should be left around

Copyright ASME International
Provided by IHS under license with ASME
No reproduction or networking permitted without license from IHS
Not for Resale

the holding pond or tankage facilities and associated equipment to provide access for maintenance and area cleanup. The entire facility should be fenced to minimize trespass. Roadways and gates should be located to give ready ingress to and egress from the facilities.

(02) **1134.21.3 Tankage.** Tanks for storage or handling slurries may have open tops and shall be constructed in accordance with any of the following API 650, API 12-D, API 12-F, or AWWA D100. Alternatively, such tanks shall be designed and constructed in accordance with other accepted good engineering practices. Provisions should be made to contain possible slurry spills.

1134.21.4 Foundations. Tank foundations shall be constructed in accordance with plans and specifications which shall take into account local soil conditions, type of tank, usage, and general locations.

1134.21.5 Holding Ponds

(a) When required, holding ponds shall be constructed to plans and specifications and shall be of sufficient size to contain slurry discharged during normal and emergency operating conditions.

(b) Holding ponds shall be so located as to insure that process water is retained for reuse or meets the water quality standards of the area prior to disposal.

1134.22 Electrical Installations

1134.22.1 General. Electrical installations for lighting, power, and control shall be covered by detailed plans and specifications, and installations shall be in accordance with codes applicable to the specific type of circuitry and classification of areas for electrical installation. Inspection shall be provided and all circuitry shall be tested before operation to assure that the installation was made in workmanlike manner and to provide for the continuing safety of personnel and equipment. Installations shall be made in accordance with ANSI/NFPA 70.

1134.22.2 Care and Handling of Materials. All electrical equipment and instruments shall be carefully handled and properly stored or enclosed to prevent damage, deterioration, or contamination during construction. Packaged components are not to be exposed until installation. Equipment susceptible to damage or deterioration by exposure to humidity shall be adequately protected by using appropriate means such as plastic film enclosures, desiccants, or electric heating.

1134.22.3 Installation. The installation of electrical materials shall be made by qualified personnel familiar with details of electrical aspects and code requirements for such installation. At all times care shall be exercised to prevent damage to the insulation of cable and wiring. All partial installations shall be protected from damage during construction. The installation design and specifications shall give consideration to the need for dust- and/or moisture-proof enclosures for such special gear as relays, small switches, and electronic components. In no case shall the frames of electric motors or other grounded electrical equipment be used as the ground connection for electrical welding.

1134.23 Slurry Metering

(a) Slurry metering should be accomplished by use of measurement equipment which is compatible with the slurry being measured.

(b) Access to metering facilities should be restricted to authorized personnel.

(c) Assembly of the metering facility components shall be in accordance with para. 1135.

1135 ASSEMBLY OF PIPING COMPONENTS

1135.1 General

The assembly of the various piping components, whether done in a shop or as a field erection, shall be done so that the completely erected piping conforms with the requirements of this Code and with the specific requirements of the engineering design.

1135.2 Bolting Procedures

(a) All flanged joints shall be fitted up so that the gasket contact faces bear uniformly on the gasket and are made up with uniform bolt stress insofar as is practicable. Alignment and tightening shall not result in excessive stress in adjacent piping.

(b) In bolting gasketed flanged joints, the gasket shall be properly compressed in accordance with the design principles applicable to the type of gasket used.

(c) All bolts or studs shall extend completely through their nuts.

1135.3 Pumping Unit Piping

(a) Piping to pumping units shall be so designed and supported that when assembled to the pump flanges and valves, it should be relatively free of stress and should not add unacceptable stress or load to the pump frame.

(b) The design and assembly shall take into account the forces of expansion and contraction to minimize their effect within the assembly.

(c) All valves and fittings on pumping units shall carry pressure ratings equal to or higher than required for line operating pressures.

(d) Welding shall be in accordance with para. 1134.8 of the Code.

(e) Bolting shall be in accordance with para. 1135.2.

1135.4 Manifolds

(a) All components within a manifold assembly, including valves, flanges, fittings, headers, and special

Copyright ASME International
Provided by IHS under license with ASME
No reproduction or networking permitted without license from IHS
Not for Resale

assemblies, shall be capable of withstanding design pressures specified for the installation.

(b) Pressure containing meter and scraper trap assemblies shall be subject to the same assembly requirements as manifolds.

(c) Manifold headers with multiple outlets shall have outlets designed as covered in paras. 1104.3.1(b) and (e) and as illustrated in Figs. 1104.3.1(b)(3) and 1104.3.1(d)(2), respectively. Manifold headers with multiple outlets may be assembled with the use of jigs to assure alignment of outlets and flanges with other components. The fabricated unit shall be stress relieved before removal from the jig.

(d) Manifold headers may be assembled with the use of jigs to assure alignment of components. Stress relieving should be considered.

(e) All welding on manifolds and headers shall conform to para. 1134.8.

(f) Final assembly of all components shall minimize stresses. The entire assembly shall be adequately supported.

1135.5 Auxiliary Slurry Piping

(a) All auxiliary piping between main units and auxiliary components shall be assembled in a workmanlike manner and in accordance with the applicable code.

(b) All welded auxiliary lines shall be assembled in accordance with the requirements of this Code with special provisions, as required, for assembly to minimize stresses, and for adequate support or restraint to minimize vibration.

Copyright ASME International
Provided by IHS under license with ASME
No reproduction or networking permitted without license from IHS
Not for Resale

CHAPTER VI
INSPECTION AND TESTING

1136 INSPECTION

1136.1 General

Construction inspection provisions for pipelines and related facilities shall be adequate to assure compliance with the material, construction, welding, assembly, and testing requirements of this Code.

1136.2 Qualification of Inspectors

Inspection personnel shall be qualified by having knowledge and experience in the work to be inspected. Such personnel shall be capable of performing one or more of the following inspection services:

(a) right of way and grading
(b) use of explosives
(c) ditching
(d) road and railroad casings and crossings
(e) pipe and material handling
(f) bending
(g) line up and pipe surface inspection
(h) welding
(i) coating
(j) tie-in and lowering
(k) backfilling and clean up
(l) pressure testing
(m) special services for testing and inspection of facilities, such as station construction, river crossings, electrical installation, radiography, corrosion control, double jointing, etc., as may be required

1136.5 Type and Extent of Examination Required

1136.5.1 Visual

(a) *Material*

(1) All piping components shall be visually inspected to ensure that no mechanical damage has occurred during shipment and handling prior to being connected into the piping system.

(2) All pipe shall be cleaned inside and outside, as necessary to permit good inspection, and shall be visually inspected to discover any defects which might impair its strength or tightness. Careful attention shall be given to the overall condition of the pipe, internal and external appearance, bends, buckling, flattening, degree of pitting, or other surface defects, such as seams, cracks, grooves, gouges, dents, and arc burns.

(3) On systems where pipe is telescoped by grade, wall thickness, or both, particular care shall be taken to ensure proper placement of pipe. Permanent records shall be kept showing the location as installed of each material specification and grade, type, pipe size, wall thickness, and manufacturer of the pipe.

(b) *Construction*

(1) Visual inspection for detection of surface defects in the pipe shall be provided for each job just ahead of any coating operation and during the lowering-in and backfill operation.

(2) The pipe swabbing operation to provide a clean surface inside the pipe shall be inspected for thoroughness.

(3) Before welding, the pipe shall be examined for damage-free bevels and proper alignment of the joint.

(4) All welding operations shall be inspected to verify that welding is being performed in accordance with established welding procedures.

(5) The stringer bead shall be inspected, particularly for cracks, before subsequent beads are applied.

(6) The completed weld shall be cleaned and inspected prior to coating operations, and irregularities that could protrude through the pipe coating shall be removed.

(7) When the pipe is coated, inspection shall be made to determine that the coating machine does not cause harmful gouges or grooves in the pipe surface.

(8) Lacerations of the pipe coating shall be inspected prior to repair of the coating to see if the pipe surface has been damaged. Damaged coating and pipe shall be repaired before the pipe is lowered in the ditch.

(9) All repairs, changes, or replacements shall be inspected before they are covered up.

(10) The condition of the ditch shall be inspected before the pipe is lowered in to assure proper depth and protection of pipe and coating. Where a ditch is required for offshore, the condition of the ditch and the fit of the pipe to the ditch shall be inspected, if feasible.

(11) The fit of pipe to ditch shall be inspected before the backfilling operations. For pipelines offshore, the backfill shall be inspected, if feasible.

(12) Except for pipelines offshore, the backfill operation shall be inspected for quality and compaction of backfill, placement of material for the control of erosion, and possible damage to the pipe coatings.

(13) Cased crossings shall be inspected during installation to determine that the carrier pipe is supported, sealed, and insulated from the casing.

Copyright ASME International
Provided by IHS under license with ASME
No reproduction or networking permitted without license from IHS
Not for Resale

(14) River crossings shall have thorough inspection, and shall be surveyed and profiled after construction.

(15) All piping components other than pipe shall be inspected to ensure damage-free condition and proper installation.

(16) Stringing operations shall be inspected to verify use of proper pipe handling techniques and that the pipe is not being damaged.

(17) When explosives are used during grading and ditching operations, inspections shall be made to verify use of proper techniques and maintenance of records.

(18) The bending operations shall be inspected to verify that the maximum allowable angle of bend is not exceeded and that there is no wrinkling or excessive flattening of the pipe.

1136.5.2 Supplementary Types of Examination

(a) Field and shop welds shall be tested in accordance with para. 1134.8.5.

(b) Radiographic inspection of welds shall be performed in accordance with para. 1134.8.5.

(c) Coated pipe shall be inspected in accordance with para. 1161.1.2.

1136.6 Repair of Defects

(a) Injurious defects of fabricated items and in pipe wall shall be repaired or eliminated in accordance with para. 1134.5.

(b) Welding defects shall be repaired in accordance with para. 1134.8.7.

(c) Holidays or other damage to coating shall be repaired and reinspected.

1137 TESTING

1137.1 General

(a) In order to meet the requirements of this Code, it is necessary that tests be made upon the completed system and upon component parts of the finished system. When reference in this Code is made to tests or portions of tests described in other codes and specifications, they shall be considered as a part of this Code.

(b) Should leaks occur on tests, the line section or component part shall be repaired or replaced and retested in accordance with this Code.

1137.1.3 Testing of Fabricated Items

(a) Fabricated items, such as scraper traps, manifolds, volume chambers, etc., shall be hydrostatically tested to limits equal to or greater than those required of the completed system. This test may be conducted separately or as a part of the completed system.

(b) In testing fabricated items before installation, the applicable paragraphs of specifications listed in Table 1123.1 shall apply.

1137.1.4 Testing After New Construction

(a) *Systems or Parts of Systems*

(1) All slurry transportation piping systems within the scope of this Code, regardless of stress, shall be tested after construction.

(2) Systems to be operated at a hoop stress of more than 20% of the specified minimum yield strength of the pipe shall be hydrostatically tested in accordance with para. 1137.4.1.

(3) Systems to be operated at a hoop stress of 20% or less of specified minimum yield strength of pipe may be subjected to a leak test in accordance with para. 1137.4.3 in lieu of the hydrostatic test specified in para. 1137.4.1.

(4) When testing piping, in no case shall the test pressure exceed that stipulated in the standards or specifications (except pipe) incorporated in this Code by reference and listed in Table 1123.1 for the weakest element in the system, or portion of system, being tested.

(5) Equipment not to be subjected to test pressure shall be disconnected from the piping or otherwise isolated. Valves may be used if the valves, including closing mechanisms, are suitable for the test pressure.

(b) *Testing Tie-Ins.* Because it is sometimes necessary to divide a pipeline into test sections and install test heads, connecting piping, and other necessary appurtenances for testing, or to install a pretested replacement section, it is not required that tie-in welds be tested; however, tie-in welds and girth welds joining lengths of pretested pipe shall be inspected by radiographic or other accepted nondestructive methods in accordance with para. 1134.8.5(a)(4) if the system is not pressure tested after tie-in. After such inspection, the joint shall be coated and inspected in accordance with para. 1161.1.2 before backfilling.

(c) *Testing Controls and Protective Equipment.* All controls and protective equipment, including pressure limiting devices, regulators, controllers, relief valves, and other safety devices, shall be tested to determine that they are in good mechanical condition; of adequate capacity, effectiveness, and reliability of operation for the service in which they are employed; functioning at the correct pressure; and properly installed and protected from foreign materials or other conditions that might prevent proper operation.

1137.2 Test Liquid

The test liquid shall be water or another nonhazardous liquid.

1137.4 Test Pressure

1137.4.1 Proof Testing

(a) Portions of slurry piping systems to be operated at a hoop stress of more than 20% of the specified minimum yield strength of the pipe shall be subjected at any point to a hydrostatic proof test equivalent to not less than 1.1 times the internal design pressure at that point (see para. 1101.2.2) for not less than 4 hr. When lines are

Copyright ASME International
Provided by IHS under license with ASME
No reproduction or networking permitted without license from IHS
Not for Resale

tested at pressures which develop a hoop stress, based on nominal wall thickness, in excess of 90% of specified minimum yield strength of the pipe, special care shall be used to prevent overstrain of the pipe.

(1) No further tests are required for those portions of piping systems where all of the pressured components are visually inspected during the proof test to determine that there is no leakage. This can include lengths of pipe which are pretested for use as replacement sections.

(2) On those portions of piping systems not visually inspected while under test, the proof test shall be followed by a leak test equivalent to not less than 1.1 times the internal design pressure for not less than another 4 hr.

(b) API RP 1110 may be used for guidance for the hydrostatic test.

(c) If the testing medium in the system will be subject to thermal expansions during the test, provisions shall be made for relief of excess pressure. Effects of temperature changes shall be taken into account when interpretations are made of recorded test pressures.

(d) After completion of the hydrostatic test, it is important in cold weather that the lines, valves, and fittings be drained completely of any water to avoid damage due to freezing.

1137.4.3 Leak Testing A 1-hr hydrostatic or pneumatic leak test may be used for piping systems to be operated at a hoop stress of 20% or less of the specified minimum yield strength of the pipe. The hydrostatic test pressure shall be not less than 1.25 times the internal design pressure. The pneumatic test gauge pressure shall be 100 psi (689 kPa) or that pressure which would produce a nominal hoop stress of 25% of the specified minimum yield strength of the pipe, whichever is less.

1137.6 Qualification Tests

Where tests are required by other sections of this Code, the following procedures shall be used.

1137.6.1 Visual Examination. Used or new pipe to be laid shall be visually examined in accordance with para. 1136.5.1.

(02) **1137.6.2 Bending Properties**

(a) For pipe of unknown specification or ASTM A 120, bending properties are required if minimum yield strength used for design is above 24,000 psi (165 MPa) and after the type of joint has been identified in accordance with para. 1137.6.4. For pipe NPS 2 and under, the bending test shall meet the requirements of ASTM A 53 or API 5L. For pipe larger than NPS 2, flattening tests shall meet the requirements of ASTM A 53 or API 5L.

(b) The number of tests required to determine bending properties shall be the same as required in para. 1137.6.6 to determine yield strength.

Table 1137.6.5 Minimum Number of Test Welds

Nominal Pipe Size (NPS)	Number of Lengths per Test
Less than 6	400
6 through 12	200
Larger than 12	100

GENERAL NOTE: All test specimens shall be selected at random.

1137.6.3 Determination of Wall Thickness. When a nominal wall thickness is not known, it shall be determined by measuring the thickness at quarter points on one end of each piece of pipe. If the lot of pipe is known to be of uniform grade, size, and nominal thickness, measurement shall be made on not less than 5% of the individual lengths, but not less than 10 lengths; thickness of the other lengths may be verified by applying a gage set to the minimum thickness. Following such measurement, the nominal wall thickness shall be taken as the next nominal wall thickness below the average of all the measurements taken, but in no case greater than 1.14 times the least measured thickness for all pipe under NPS 20 and no greater than 1.11 times the least measured thickness for all pipe NPS 20 or larger.

1137.6.4 Determination of Weld Joint Factor. If the type of longitudinal or spiral weld joint is known, the corresponding weld joint factor E (Table 1102.4.3) may be used. Otherwise, as noted in Table 1102.4.3, factor E shall not exceed 0.60 for pipe NPS 4 and smaller, or 0.80 for pipe over NPS 4.

1137.6.5 Weldability. For steel pipe of unknown specification, weldability shall be determined as follows. A qualified welder shall make a girth weld in the pipe. This weld shall be tested in accordance with the requirements of para. 1134.8.5. The qualifying weld shall be made under the most severe conditions under which welding will be permitted in the field and using the same procedure as to be used in the field. The pipe shall be considered weldable if the requirements of para. 1134.8.5 are met. At least one such test weld shall be made for each number of lengths to be used as listed in Table 1137.6.5.

1137.6.6 Determination of Yield Strength. When the specified minimum yield strength, minimum tensile strength, or minimum percent of elongation of pipe is unknown, the tensile properties may be established as follows.

Perform all tensile tests prescribed by API 5L or API 5LU, except that the minimum number of such tests shall be as shown in Table 1137.6.6.

1137.6.7 Minimum Yield Strength Value. For pipe of unknown specification, the minimum yield strength may be determined as follows.

Copyright ASME International
Provided by IHS under license with ASME
No reproduction or networking permitted without license from IHS
Not for Resale

Table 1137.6.6
Minimum Number of Tensile Tests

Nominal Pipe Size (NPS)	Number of Lengths per Test
Less than 6	200
6 through 12	100
Larger than 12	50

GENERAL NOTE: All test specimens shall be selected at random.

Average the value of all yield strength tests for a test lot. The minimum yield strength shall then be taken as the lesser of the following:

(a) 80% of the average value of the yield strength tests

(b) the minimum value of any yield strength test, except that in no case shall this value be taken as greater than 52,000 psi (358 MPa)

(c) 24,000 psi (165 MPa) if the average yield-tensile ratio exceeds 0.85

1137.7 Records

A record shall be maintained in the files of the operating company regarding design, construction, and testing of each slurry transportation piping system within the scope of this Code. These records shall include material specifications; route maps and alignment sheets for "as-built" condition; location of each pipe size, grade, wall thickness, type, specification, and manufacturer; coatings; and test data. These records shall be kept for the life of the facility.

Copyright ASME International
Provided by IHS under license with ASME
No reproduction or networking permitted without license from IHS
Not for Resale

CHAPTER VII
OPERATION AND MAINTENANCE PROCEDURES

1150 OPERATION AND MAINTENANCE PROCEDURES AFFECTING THE SAFETY OF SLURRY TRANSPORTATION PIPING SYSTEMS

1150.1 General

(a) It is not possible to prescribe in this Code a detailed set of operating and maintenance procedures that will encompass all cases. It is possible, however, for each operating company to develop operating and maintenance procedures based on the provisions of this Code, and the company's experience and knowledge of its facilities and conditions under which they are operated. Such operating and maintenance procedures should be adequate from the standpoint of public and employee safety.

(b) The methods and procedures set forth herein serve as a general guide, but do not relieve the individual or operating company from the responsibility for prudent action that current particular circumstances make advisable.

(c) It must be recognized that local conditions (such as the effects of temperature, characteristics of the line contents, and topography) will have considerable bearing on the approach to any particular maintenance and repair job.

(02) 1150.2 Operation and Maintenance Plans and Procedures

Each operating company having a transportation piping system within the scope of this Code shall

(a) have written plans and instructions for employees covering operating and maintenance procedures for the transportation piping system during normal operations and maintenance in accordance with the purpose of this Code (essential features recommended for inclusion in the plans for specific portions of the system are given in paras. 1151 and 1152)

(b) have a plan for external corrosion and internal corrosion—erosion control of new and existing piping systems, including requirements and procedures prescribed in Chapter VIII

(c) have a written emergency plan as indicated in para. 1154 for implementation in the event of system failures, accidents, or other emergencies; acquaint appropriate operating and maintenance employees with the applicable portion of the plan; and establish liaison with appropriate public officials with respect to the plan

(d) have a plan for reviewing changes in conditions affecting the integrity and safety of the piping system, including provisions for periodic patrolling and reporting of construction activity, and changes in conditions, especially in industrial, commercial, and residential areas, and at river, railroad, and highway crossings, in order to consider the possibility of providing additional protection to prevent damage to the pipeline in accordance with para. 1102.1

(e) establish liaison with local authorities who issue construction permits in urban areas to prevent accidents caused by excavators

(f) establish procedures to analyze all failures and accidents for the purpose of determining the cause and to minimize the possibility of recurrence

(g) maintain necessary maps and records to properly administer the plans and procedures, including records listed in para. 1155

(h) have abandonment procedures before abandoning piping systems, including the requirements in para. 1157

(i) in establishing plans and procedures, give particular attention to those portions of the system that may present a hazard to the public or employees in the event of emergencies or because of construction or extraordinary maintenance requirements

(j) operate and maintain its piping system in conformance with these plans and procedures

(k) modify the plans and procedures from time to time as experience and conditions dictate

1151 PIPELINE OPERATION AND MAINTENANCE

1151.1 Operating Pressure (02)

(a) Care shall be exercised to assure that at any point in the piping system the maximum steady state operating pressure and static head pressure with the line in a static condition do not exceed at that point the internal design pressure and pressure ratings for the components used as specified in para. 1102.2.3, and that the level of pressure rise due to surges and other variations from normal operation does not exceed the internal design pressure at any point in the piping system and equipment by more than 10% as specified in para. 1102.2.4.

(b) A piping system shall be qualified for a higher operating pressure when the higher operating pressure will produce a hoop stress of more than 20% of the

Copyright ASME International
Provided by IHS under license with ASME
No reproduction or networking permitted without license from IHS
Not for Resale

specified minimum yield strength of the pipe in accordance with para. 1156.

(c) If any part of a piping system is derated to a lower operating pressure in lieu of repair or replacement, the new maximum steady state operating pressure shall be determined in accordance with para. 1151.7.

(d) For existing systems utilizing materials produced under discontinued or superseded standards or specifications, the internal design pressure shall be determined using the allowable stress and design criteria listed in the issue of the applicable code or specification in effect at the time of the original construction.

1151.2 Communications

A communications facility shall be maintained to assure safe pipeline operations under both normal and emergency conditions.

1151.3 Markers

(a) Markers shall be installed to indicate the presence of each line on each side of a public road, railroad, and navigable water crossing to properly identify the system. Markers are not required for pipelines offshore.

(b) Pipeline markers at crossings, aerial markers when used, and other signs shall be maintained so as to indicate the presence of the line. These markers shall show the name of the operating company and, where possible, an emergency telephone contact. Additional pipeline markers shall be installed along the line in areas of development and growth to protect the system from encroachment. API RP 1109 may be used as guidance.

1151.4 Right-of-Way Maintenance

(a) The right of way should be maintained for clear visibility and to provide the maintenance crews reasonable access to the system.

(b) Access shall be maintained to valve locations.

(c) Diversion ditches or dikes shall be maintained where needed to protect against washouts of the line and erosion of the landowner's property.

1151.5 Patrolling

(a) Each operating company shall maintain a periodic pipeline patrol program to observe surface conditions on and adjacent to the pipeline right of way, indication of leaks, construction activity other than that performed by the company, and any other factors affecting the safety and operation of the pipeline. Special attention shall be given to such activities as road building, ditch cleanouts, excavations, and similar encroachments to the pipeline system. Patrols should be made at intervals not exceeding one per month.

(b) Underwater crossings shall be inspected periodically for sufficiency of cover, accumulation of debris, or for any other condition affecting the safety and security of the crossings, and at any time it is felt that the crossings are in danger as a result of floods, storms, or suspected mechanical damage.

1151.6 Pipeline Repairs

1151.6.1 General. Repairs shall be covered by a maintenance plan [see para. 1150.2(a)] and shall be performed under qualified supervision by trained personnel. The maintenance plan shall consider the appropriate information contained in API standard 1104 and API RP 1111. It is essential that all personnel working on pipeline repairs understand the need for careful planning of the job and be briefed as to the procedure to be followed in accomplishing the repairs. (02)

1151.6.2 Permanent Repairs for Pipelines Operating at a Hoop Stress of More Than 20% of the Specified Minimum Yield Strength of the Pipe (02)

(a) Limits and Dispositions of Imperfections

(1) Gouges and grooves having a depth greater than $12\frac{1}{2}\%$ of the nominal wall thickness shall be removed or repaired.

(2) Dents meeting any of the following conditions shall be removed or repaired:

(a) dents which affect the pipe curvature at the pipe seam or at any girth weld

(b) dents containing a scratch, gouge, or groove

(c) dents exceeding a depth of $7\frac{1}{2}\%$ of the nominal pipe diameter

(3) All arc burns shall be removed or repaired.

(4) All cracks shall be removed or repaired.

(5) All welds found to have imperfections not meeting the standards of acceptability in para. 1134.8.5(b) for field welds or the acceptance limits in the appropriate specifications for the grade and type of pipe shall be removed or repaired.

(6) General Wall Thickness Reduction. Pipe shall be replaced, or repaired if the area is small, or operated at a reduced pressure (see para. 1151.7) if the wall thickness is less than the minimum thickness required by the design pressure, decreased by an amount equal to the manufacturing tolerance applicable to the pipe or component.

(7) Local Wall Thickness Reduction. Pipe shall be repaired, replaced, or operated at a reduced pressure (see para. 1151.7) if the local wall thickness is less than the minimum required by the design pressure, decreased by an amount equal to the manufacturing tolerance applicable to the pipe or component. This applies if the length of the affected area is greater than that permitted by Eq. (1).

The following method applies only when the thickness of the remaining wall is not less than 20% of the nominal wall thickness of the pipe. This method is not applicable to regions in the longitudinal weld area. The affected area must be clean to bare metal. Care shall be taken in cleaning affected areas of a pressurized pipe

Copyright ASME International
Provided by IHS under license with ASME
No reproduction or networking permitted without license from IHS
Not for Resale

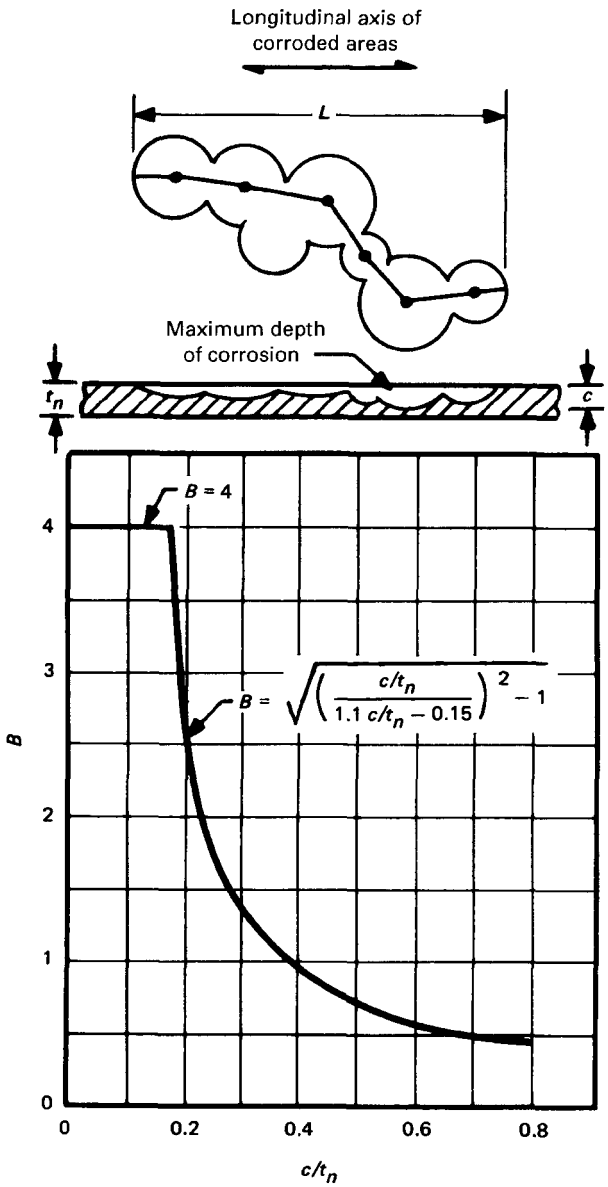

Fig. 1151.6.2(a)(7) Parameters Used in Analysis of the Strength of Corroded Areas

when the degree of metal loss is significant.

$$L = 1.12B\sqrt{Dt_n} \quad (1)$$

where

$$B = \sqrt{\left(\frac{c/t_n}{1.1\,c/t_n - 0.15}\right)^2 - 1}$$

L = maximum allowable longitudinal extent of the affected area as shown in Fig. 1151.6.2(a)(7), in. (mm)

B = a value not to exceed 4.0 which may be determined from the above equation or Fig. 1151.6.2(a)(7)

D = nominal outside diameter of the pipe, in. (mm)

t_n = nominal wall thickness of the pipe minus general wall thickness reduction, in. (mm)

c = maximum depth of the local wall thickness reduction, in. (mm)

(8) Areas where grinding has reduced the remaining wall thickness to less than the minimum thickness required by the pipe specifications tolerance may be analyzed in the same way as localized wall thickness reduction [see para. 1151.6.2(a)(7)] to determine if ground areas need to be replaced or repaired, or if the operating pressure needs to be reduced (see para. 1151.7).

(9) All pipe containing leaks shall be removed or repaired.

(b) Allowable Pipeline Repairs

(1) If feasible, the pipeline shall be taken out of service and repaired by cutting out a cylindrical piece of pipe containing the imperfection and replacing the same with pipe meeting the requirements of para. 1101.2.2 and having a length of not less than one-half of the diameter.

(2) If it is not feasible to take the pipeline out of service, repairs may be made by the installation of a full encirclement welded or mechanically applied split sleeve in accordance with para. 1151.6.2(c).

(a) For repairs of dents, either a hardenable filler material, such as epoxy, shall be used to fill the void between the sleeve and the pipe to restore the original contour of the pipe, or the carrier pipe shall be tapped through the sleeve or other means provided to equalize the internal pressures of the carrier pipe and the sleeve.

(b) For repairs to nonleaking cracks, the carrier pipe shall be tapped through the pressure containing sleeve or other means provided to equalize the internal pressures of the carrier pipe and the sleeve.

(3) If it is not feasible to take the pipeline out of service, imperfections may be removed by grinding or hot tapping. When grinding, the ground areas shall be smoothly contoured and be in accordance with para. 1151.6.2(a)(8). When hot tapping, the portion of pipe containing the imperfection shall be completely removed.

(4) If it is not feasible to take the pipeline out of service, minor leaks and small corroded areas, except for cracks, may be repaired by the installation of a patch or welded fitting in accordance with paras. 1151.6.2(c)(5) and (8). Pipe containing arc burns, grooves, and gouges may be repaired with patches or welded fitting if the arc burn or notch is removed by grinding.

(5) If it is not feasible to take the pipeline out of service, imperfections in welds produced with a filler metal, small corroded areas, gouges, grooves, and arc burns may be repaired by depositing weld metal in accordance with para. 1151.6.2(c)(9). Weld imperfections, arc burns, gouges, and grooves shall be removed

Copyright ASME International
Provided by IHS under license with ASME
No reproduction or networking permitted without license from IHS
Not for Resale

by grinding prior to depositing the weld filler metal.

(c) Repair Methods

(1) All welders performing repair work shall be qualified in accordance with para. 1134.8.3 or API standard 1104. They shall also be familiar with safety precautions and problems associated with cutting and welding on pipe. Cutting and welding shall commence only after compliance with para. 1134.8.1(c).

(2) The qualification test for welding procedures to be used on pipe containing a liquid shall consider the cooling effects of the pipe contents on the soundness and mechanical properties of the weld. Welding procedures on pipe not containing liquid shall be qualified in accordance with para. 1134.8.3.

(3) Materials used for pipeline repairs shall be in accordance with at least one of the specifications or standards listed in Table 1123.1, or as otherwise required by this Code.

(4) Temporary repairs may be necessitated for operating purposes and shall be made in a safe manner. Such temporary repairs shall be made permanent or replaced in a permanent manner as described herein as soon as practical.

(5) Welded patches shall have rounded corners and a maximum dimension of 6 in. along the pipe axis. The patch material shall be of a similar or higher grade with a wall thickness similar to the pipe being repaired. Patches shall be limited to pipe sizes NPS 12 and less and conform to API 5L, Grade X42 and lower. Patches shall be attached by fillet welds. Insert patching is prohibited. Special consideration shall be given to minimize stress concentrations resulting from the repair.

(6) Full encirclement welded split sleeves installed to repair leaks or otherwise to contain internal pressure shall have a design pressure of not less than the pipe being repaired and shall be fully welded, both circumferentially and longitudinally. Length of full encirclement split sleeves shall not be less than 4 in. (100 mm). If the sleeve is thicker than the pipe being repaired, the circumferential ends shall be chamfered (at approximately 45 deg) down to the thickness of the pipe. For full encirclement split sleeves installed for repair by reinforcement only and not for internal pressure containment, circumferential welding is optional. Special consideration shall be given to minimize stress concentrations resulting from the repair.

(7) Mechanically applied full encirclement repair fittings shall meet the design requirements of paras. 1101.2 and 1118.

(8) Welded fittings used to cover pipeline imperfections shall not exceed NPS 3 and shall have a design pressure of not less than the pipe being repaired.

(9) For repairs involving only deposition of a weld filler metal, welding processes shall be in accordance with the requirements of the appropriate pipe specification for the grade and type being repaired. Welding procedure qualifications shall be in accordance with para. 1151.6.2(c)(2).

(10) Where repairs are made to a coated pipe, all damaged coating shall be removed and new coating applied in accordance with para. 1161.1.2. Replacement pieces of pipe, welded patches, and full encirclement welded split sleeves used in making repairs shall also be coated when installed in a coated line.

(11) Pipe containing liquid shall be examined to determine that the material is sound and of adequate thickness in the areas to be affected by grinding, welding, cutting, or hot tapping operations.

(12) If the pipeline is not taken out of service, the operating pressure shall be reduced to a level which will provide safety during the repair operations.

1151.6.3 Testing Repairs to Pipelines Operating at a Hoop Stress of More Than 20% of the Specified Minimum Yield Strength of the Pipe

(a) Testing of Replacement Pipe Sections. When a scheduled repair to a pipeline is made by cutting out a section of the pipe as a cylinder and replacing it with another section of pipe, the replacement section of pipe shall be subjected to a pressure test. The replacement section of pipe shall be tested as required for a new pipeline in accordance with para. 1137.4.1. The tests may be made on the pipe prior to installation provided radiographic or other acceptable nondestructive tests (visual inspection excepted) are made on all tie-in butt welds after installation.

(b) Examination of Repair Welds. Welds made during pipeline repairs shall be examined by accepted nondestructive methods or visually examined by a qualified inspector.

1151.7 Derating a Pipe Segment to a Lower Operating Pressure (02)

Pipe containing local wall thickness reduction or areas repaired by grinding where the remaining material in the pipe does not meet the requirements of para. 1151.6.2(a)(7) may be derated to a lower operating pressure in lieu of a replacement or repair.

(a) Lower operating pressure may be based on para. 1104.1.2 and the actual remaining wall thickness of the pipe; or

(b) Lower operating pressure may be determined by the following equation, provided the wall reduction or grinding is not in the girth or longitudinal weld or related heat affected zone.

$$P_d = 1.1P_i \left[\frac{1 - 0.67\left(\frac{c}{t_n}\right)}{1 - \frac{0.67c}{t_n\sqrt{G^2 + 1}}} \right] \quad (2)$$

where

$$G = 0.893\, L/\sqrt{Dt_n} \quad (3)$$

Copyright ASME International
Provided by IHS under license with ASME
No reproduction or networking permitted without license from IHS
Not for Resale

= a value not to exceed 4.0 in Eq. (3). If G exceeds 4.0, Eq. (4) instead of Eq. (2) shall be used.

L = longitudinal extent of the affected area as shown in Fig. 1151.6.2(a)(7), in. (mm)

P_d = derated internal design gage pressure, psi (kPa)

P_i = original internal design gage pressure, based on specified nominal wall thickness of the pipe (see para. 1104.1), psi (kPa)

For t_n, c, and D, see para. 1151.6.2(a)(7). For values of G greater than 4.0,

$$P_d = 1.1P_i\,(1 - c/t_n) \quad (4)$$

NOTE: In Eq. (4), P_d shall not exceed P_i.

1151.8 Valve Maintenance

Pipeline valves shall be inspected and serviced where necessary and operated fully or partially at least once each year to prove operability.

(02) 1151.9 Railroads and Highways Crossing Existing Pipelines

(a) When an existing pipeline is to be crossed by a new road or railroad, the operating company shall analyze the pipeline in the area to be crossed in terms of the new anticipated external loads. If the sum of the circumferential stresses caused by internal pressure and newly imposed external loads (including both live and dead loads) exceeds 0.90 SMYS (specified minimum yield strength), the operating company shall install mechanical reinforcement, structural protection, or suitable pipe to reduce the stress to 0.90 SMYS or less, or redistribute the external loads acting on the pipeline. API 1102 provided methods that may be used to determine the total stress caused by internal pressure and external loads. API 1102 also provides methods to check cyclic stress components for fatigue failure.

(b) Modifications to existing pipelines in service at a proposed railroad or highway crossing should conform to details as contained in API RP 1102. See para. 1161.1.2(f) if casing is used. Casing is generally not recommended, but may be required to meet some highway or railway specifications.

(c) Testing and inspection of replaced pipe sections shall conform to the requirements of para. 1151.6.3. All new girth welds in the carrier pipe shall be radiographed or inspected by other acceptable nondestructive methods (visual inspection excepted).

1151.10 Platform Risers

Riser installations shall be visually inspected annually for physical damage and corrosion in the splash zone and above. The extent of any observed damage shall be determined, and, if necessary, the riser installation shall be repaired or replaced.

1152 PUMP STATION, TERMINAL, AND STORAGE OPERATION AND MAINTENANCE

1152.1 General

(a) Starting, operating, and shutdown procedures for all equipment shall be established, and the operating company shall take appropriate steps to see that these procedures are followed. These procedures shall outline preventive measures and systems checks required to ensure the proper functioning of all shutdown, control, and alarm equipment.

(b) Periodic measurement and monitoring of flow and recording of discharge pressures shall be provided for detection of deviations from the steady state operating conditions of the system.

1152.2 Controls and Protective Equipment

Controls and protective equipment,including pressure limiting devices, regulators, controllers, relief valves, and other safety devices, shall be subjected to systematic periodic inspections and tests, at least annually, to determine that they are

(a) in good mechanical condition

(b) adequate from the standpoint of capacity and reliability of operation for the service in which they are employed

(c) set to function at the correct pressure

(d) properly installed and protected from foreign materials or other conditions that might prevent proper operation

1152.3 Storage Facilities

Storage facilities handling the slurry shall be periodically inspected, and appropriate records shall be maintained.

1152.4 Storage of Combustible Materials

All flammable or combustible materials in quantities beyond those required for everyday use or other than those normally used in pump houses shall be stored a suitable distance from the pump house. All aboveground oil or gasoline storage tanks shall be protected in accordance with ANSI/NFPA 30.

1152.5 Fencing

Station, terminal, and storage areas shall be maintained in a safe condition and should be fenced and locked, or attended, for the protection of the property and the public.

1152.6 Signs

(a) Suitable signs shall be posted to serve as warnings in hazardous areas.

(b) Classified and high voltage areas shall be adequately marked and isolated.

Copyright ASME International
Provided by IHS under license with ASME
No reproduction or networking permitted without license from IHS
Not for Resale

(c) Caution signs shall be displayed indicating the name of the operating company and, where possible, an emergency telephone contact.

1153 CORROSION-EROSION CONTROL

Control of external corrosion and internal corrosion-erosion, including tests, inspections, and appropriate corrective measures, shall be as prescribed in Chapter VIII.

1154 EMERGENCY PLAN

(a) A written emergency plan shall be established for implementation in the event of system failures, accidents, or other emergencies, and shall include procedures for prompt and expedient remedial action, minimizing property damage, protecting the environment, and limiting accidental discharge from the piping system.

(b) The plan shall provide for acquainting and training of personnel responsible for the prompt execution of emergency action. Personnel shall be informed about characteristics of the slurry in the piping systems and the proper practices in the handling of accidental discharge and repair of the facilities.

(c) Procedures shall cover liaisons with state and local agencies for dissemination of information on location of system facilities and characteristics of the slurry transported.

(d) Consideration should be given to establishing communication with residents along the piping system to recognize and report a system emergency to the appropriate operating company personnel. This could include supplying a card, sticker, or equivalent with names, addresses, and telephone numbers of operating company personnel to be contacted.

(e) In the formulation of emergency procedures for limiting accidental discharge from the piping system, the operating company shall give consideration to

(1) formulating and placing in operation procedures for an area cooperative pipeline leak notification emergency action system between operating companies having piping systems in the area

(2) reduction of pipeline pressure by ceasing pumping operations on the piping system, opening the system to delivery storage on either side of the leak site, and expeditious closing of block valves on both sides of the leak site

(3) rapid transportation of qualified personnel and necessary equipment to the leak site

1155 RECORDS

For operation and maintenance purposes, the following records shall be properly maintained:

(a) necessary operational data

(b) pipeline patrol records

(c) corrosion and corrosion-erosion records as required under para. 1166

(d) leak and break records

(e) records relating to routine or unusual inspections, such as external or internal line conditions when cutting line or hot tapping

(f) pipeline repair records

1156 QUALIFYING A PIPING SYSTEM FOR A HIGHER OPERATING PRESSURE

(a) In the event of up-rating an existing piping system when the higher operating pressure will produce a hoop stress of more than 20% of the specified minimum yield strength of the pipe, the following investigative and corrective measures shall be taken.

(1) The design and previous testing of the piping system and the materials and equipment in it shall be reviewed to determine that the proposed increase in maximum steady state operating pressure is safe and in general agreement with the requirements of this Code.

(2) The conditions of the piping system shall be determined by leakage surveys and other field inspections, examination of maintenance and corrosion control records, or other suitable means.

(3) Repairs, replacements, or alterations in the piping system disclosed to be necessary by steps (1) and (2) above shall be made.

(b) The maximum steady state operating pressure may be increased after compliance with (a) above and one of the following provisions.

(1) The system may be operated at the increased maximum steady state operating pressure if the physical condition of the piping system as determined by (a) above indicates that the system is capable of withstanding the desired increased maximum steady state operating pressure in accordance with the design requirement of this Code, and the system has previously been tested for a duration and to a pressure equal to or greater than that required in paras. 1137.4.1(a) and (c) for a new piping system for the proposed higher maximum steady state operating pressure.

(2) If the physical condition of the piping system as determined by (a) above indicates that the ability of the system to withstand the increased maximum steady state operating pressure has not been satisfactorily verified, or the system has not been previously tested to the levels required by this Code for a new piping system for the proposed higher maximum steady state operating pressure, the system may be operated at the increased maximum steady state operating pressure if the system shall successfully withstand the test required by this Code for a new system to operate under the same conditions.

Copyright ASME International
Provided by IHS under license with ASME
No reproduction or networking permitted without license from IHS
Not for Resale

(c) In no case shall the maximum steady state operating pressure of a piping system be raised to a value higher than the internal design pressure permitted by this Code for a new piping system constructed of the same materials. The rate of pressure increase to the higher maximum allowable steady state operating pressure should be gradual so as to allow sufficient time for periodic observations of the piping system.

(d) Records of such investigations, work performed, and pressure tests conducted shall be preserved as long as the facilities involved remain in service.

1157 ABANDONING A PIPING SYSTEM (02)

In the event of abandoning a piping system, it is required that:

(a) facilities to be abandoned in place shall be disconnected from all sources of the transported liquid, such as other pipelines, meter stations, control lines, and other appurtenances; and

(b) facilities to be abandoned in place shall be purged of the transported liquid and vapor with an inert material and the ends sealed.

Copyright ASME International
Provided by IHS under license with ASME
No reproduction or networking permitted without license from IHS
Not for Resale

CHAPTER VIII
CORROSION AND EROSION CONTROL

1160 GENERAL

(a) This Chapter prescribes minimum requirements and procedures for protection of ferrous pipe and components from external corrosion and internal corrosion and erosion and is applicable to new piping installations and existing piping systems.

(b) External corrosion on buried or submerged pipelines or piping exposed to the atmosphere shall be controlled, consistent with condition of the piping system and the environment in which the system is located, by application of these corrosion control requirements and procedures. Application of some corrosion control practices requires a significant amount of competent judgment in order to be effective in mitigating corrosion, and deviation from the provisions of this Chapter is permissible in specific situations, provided the operating company can demonstrate that the objectives expressed herein have been achieved.

(c) Satisfactory external corrosion control may require protective measures other than, and in addition to, those shown herein. Each operating company shall evaluate, initially and on occasion of any facility expansion or other significant change, the possibility of need for such additional measures. Any such additional measures shall be given the same consideration as the specific mandatory requirements of this Code. Procedures, including those for design, installation, and maintenance of cathodic protection systems, shall be prepared and carried out by, or under the direction of, persons qualified by training or experience in corrosion control methods. NACE RP-01-69 and RP-06-75 provide a guide for procedures to implement requirements described herein and to monitor and maintain cathodic protection systems. See para. 1161.1.1(c) for further recommendations.

(d) Internal erosion, internal corrosion, and internal erosion-corrosion require special consideration in slurry piping systems. Erosion and corrosion are recognized individually as well as in combination. Seldom can either one be fully eliminated from consideration. In some cases, the presence of erosion can greatly accelerate the corrosive effects of the slurry medium through removal of protective scales, oxides, or films. The use of inhibitors and/or erosion-corrosion allowance may provide suitable means for dealing with the issue. Other means may be appropriate.

(e) Personnel shall be provided with equipment and instrumentation necessary to accomplish the monitoring and control requirements.

1161 EXTERNAL CORROSION: BURIED OR SUBMERGED PIPELINES

1161.1 New Installations

1161.1.1 General

(a) Control of external corrosion of new buried or submerged piping systems shall be provided for each component in the system except where the operating company can demonstrate by tests, investigations, or experience in the area of application that a detrimental corrosive environment does not exist. However, within 12 months after installation, the operating company shall electrically inspect the buried or submerged system. If the electrical inspection indicates that a corrosive condition exists, the piping system shall be cathodically protected. If cathodic protection is not installed, the piping system shall be electrically inspected at intervals not exceeding 5 years, and the system shall be cathodically protected if electrical inspection indicates that a corrosive condition exists.

(b) Control of external corrosion of buried or submerged pipe and components in new installations, including new pump stations, storage facilities, and terminals; and relocating, replacing, or otherwise changing existing piping systems; shall be accomplished by the application of an effective protective coating supplemented with cathodic protection and suitable drainage bonds in stray current areas. Materials shall be selected with consideration given to the type of supplemental corrosion protection and to the environment.

(c) For piping systems offshore, special attention shall be given to control external corrosion of the pipeline risers in the "splash" zone. Refer to NACE RP-06-75 which provides additional guidelines for special corrosion measures required by the offshore environment.

(d) Where adequate provisions for corrosion control have been made, the minimum clearance of 12 in. (300 mm) between the outside of any pipe installed underground and the extremity of any other underground structure specified in para. 1134.6(c) may be reduced.

(e) The same care taken to protect buried or submerged pipelines should be taken for the transition area between buried or submerged pipelines and sections exposed to atmosphere.

Copyright ASME International
Provided by IHS under license with ASME
No reproduction or networking permitted without license from IHS
Not for Resale

1161.1.2 Protective Coating

(a) Protective coatings used on buried or submerged pipe and components shall

(1) mitigate corrosion

(2) have sufficient adhesion to the metal surface to effectively resist underfilm migration of moisture

(3) be ductile enough to resist cracking

(4) have strength sufficient to resist damage due to handling and soil stress

(5) have properties compatible with any supplemental cathodic protection

(b) Welds shall be inspected for irregularities that could protrude through the pipe coating, and any such irregularities shall be removed.

(c) Pipe coating shall be inspected, both visually and by a holiday detector, just prior to lowering pipe into the ditch, and any holiday or other damage to the coating detrimental to effective corrosion control shall be repaired and reinspected.

(d) Thermal insulating-type coating, if used, shall have low moisture absorption characteristics and provide high electrical resistance. Insulating coatings shall be inspected in accordance with established practices at the time of application and just prior to lowering pipe into the ditch, and any detected holidays shall be repaired and reinspected. After backfilling, consideration may be given to checking the pipe with an aboveground type of holiday detector if ground conditions permit.

(e) Pipe shall be handled during the lowering-in operation in such a manner as to prevent coating damage. In addition, provisions shall be made to protect the pipe and its coating from subsequent environmental damage and backfilling by the use of rock shield, ditch padding, and/or any other suitable protective measures.

(f) If coated carrier pipe is installed by boring, driving, or other similar method, precautions shall be taken to minimize damage to the coating during installation. When casing is used (see paras. 1134.13.4 and 1151.9), carrier pipe shall be independently supported outside each end of the casing and insulated from the casing throughout the length of cased section, and casing ends shall be sealed using a durable, electrically nonconductive material.

(g) The backfilling operation shall be monitored for quality, compaction, and placement of material to prevent damage to pipe coating.

(h) Where a connection is made to a coated pipe, all damaged coating shall be removed from, and new coating applied on, the attachments as well as the pipe.

1161.1.3 Cathodic Protection System

(a) A cathodic protection system, if deemed necessary by inspection, shall be installed not later than 1 year after inspection.

(b) Any cathodic protection system provided by a galvanic anode or an impressed current system shall mitigate corrosion and provide a method of determining the degree of cathodic protection achieved on the buried or submerged piping system.

(c) Cathodic protection shall be controlled so as not to damage the protective coating, pipe, or components.

(d) Owners of known underground structures which may be affected by installation of a cathodic protection system shall be notified of said installation, and, where necessary, bonding surveys shall be conducted by the parties involved.

(e) Electrical installations shall be made in accordance with the National Electrical Code and applicable local codes.

1161.1.4 Electrical Isolation

(a) Buried or submerged coated piping systems shall be electrically isolated at all interconnections with foreign systems except where arrangements are made for mutual cathodic protection or where underground metallic structures are electrically interconnected and cathodically protected as a unit.

(b) An insulating device shall be installed where electrical isolation of a portion of a piping system from pump stations, storage facilities, and similar installations is necessary to facilitate the application of corrosion control. The insulating device shall not be installed where a combustible atmosphere is anticipated unless precautions are taken to prevent arcing.

(c) Consideration shall be given to the prevention of damage to piping systems due to lightning fault currents when installed in close proximity to electric transmission tower footings, ground cables, or counterpoise. Studies in collaboration with the operator of such electric transmission systems shall be made on common problems of corrosion and electrolysis. NACE RP-01-77 may be used as a guide.

(d) Electrical tests shall be made to locate any unintentional contacts with underground metallic structures, and, if such contacts exist, each one shall be corrected.

(e) When a pipeline is separated, a bonding conductor of sufficient current carrying capacity shall be installed across the points of separation and retained during the period of separation.

1161.1.5 Test Leads

(a) Except where impractical on piping systems offshore or in wet marsh areas, sufficient test leads shall be installed on all buried or submerged coated piping systems for taking electrical measurements to indicate adequacy of the cathodic protection.

(b) Test leads shall be installed as follows:

(1) Special attention shall be given to the manner of installation of test leads used for corrosion control or testing, and leads shall be attached to the pipe in such manner as to minimize stress and to prevent significant damage. Leads may be attached directly on the pipe with the low temperature welding process using aluminum

Copyright ASME International
Provided by IHS under license with ASME
No reproduction or networking permitted without license from IHS
Not for Resale

powder and copper oxide and limiting the charge to a 15 g cartridge, or with soft solders or other materials that do not involve temperatures exceeding those for soft solders.

(2) Slack shall be provided to prevent test leads from being broken or damaged during backfilling.

(3) Leads shall be insulated from the conduit in which they are contained.

(4) Bond points shall be made watertight, and bared test lead wires, pipe, and components shall be protected by electrical insulating material compatible with original wire insulation and pipe coating.

(02) **1161.1.6 Electrical Interference**

(a) If an impressed current-type cathodic protection system is used, the anodes shall be located so as to minimize adverse effect on existing underground metallic structures.

(b) The possibility of external corrosion induced by stray electrical currents in the earth shall be recognized. See NACE RP-01-69 and NACE RP-01-77 for additional guidance. These stray currents are generated by sources remote from, and independent of, the piping system, and are more predominant in highly industrialized areas, mining regions, and locales containing high voltage dc electrical power ground beds. Foreign company pipeline cathodic protection systems are also a common source of stray earth currents. The protection of the piping system against stray current-induced corrosion shall be provided by metallic bonds, increased cathodic protection, supplemental protective coatings, insulating devices, or galvanic anodes.

1161.2 Existing Piping Systems

Conversion of existing nonslurry piping systems to slurry service must meet the requirements for new installations as stipulated in para. 1161.1. The conversion date of such piping systems shall be regarded as the installation date for the purposes of this Code.

The operating company shall establish procedures for determining the external condition of existing nonslurry piping systems and take action appropriate for the conditions found, including, but not limited to, the following.

(a) Examine and study records available from previous inspections and conduct additional inspections where the need for additional information is indicated. The type, location, number, and frequency of such inspections shall be determined by consideration of such factors as knowledge of the condition of the piping system and environment, and public or employee safety in the event of leakage. Corrective measures shall be in accordance with para. 1161.4.

(b) Install cathodic protection in accordance with para. 1161.1.3, if deemed necessary upon inspection, on all buried or submerged piping systems that are coated with an effective external surface coating material, except at pump stations, storage facilities, and terminals. All buried or submerged piping at pump stations, storage facilities, and terminals shall be electrically inspected and cathodic protection installed or augmented, where necessary.

(c) Operating pressures on bare piping systems shall not be increased until such systems are electrically inspected and other appropriate action taken regarding condition of pipe and components. The requirements of para. 1156 shall also be complied with in the event of up-rating.

(d) Consideration should also be given to the installation of electrical isolation devices, electrical interference bonds, or test leads where they do not already exist. These shall be installed in accordance with the requirements for new installations as found in para. 1161.1.

1161.3 Monitoring

(a) Cathodic protection facilities for new or existing piping systems shall be maintained in a serviceable condition, and, except where impractical on systems offshore, electrical measurements and inspections of cathodically protected buried or submerged piping systems, including tests for stray electrical currents, shall be conducted at least once each calendar year, but with intervals not exceeding 15 months, to determine that the cathodic protection system is operating properly and that all buried or submerged piping is protected in accordance with applicable criteria. Appropriate corrective measures shall be taken where tests indicate that adequate protection does not exist.

(b) Evidence of adequate level of cathodic protection shall be determined by one or more of the criteria listed in Section 6, Criteria for Cathodic Protection, NACE RP-01-69.

(c) The type, number, location, and frequency of tests shall be adequate to establish with reasonable accuracy the degree of protection provided on all piping within limits of each cathodic protection system, and shall be determined by considering

(1) age of the piping system and operating experience, including bell hole inspections and leakage survey data

(2) condition of pipe at time of application of cathodic protection and method of applying protection

(3) corrosiveness of environment

(4) probability of loss of protection due to activity of other construction, reconstruction, or other causes in the area

(5) method of applying cathodic protection and design life of cathodic protection installation

(6) public and employee safety

(d) Test leads required for cathodic protection shall be maintained so that electrical measurements can be obtained to insure adequate protection.

Copyright ASME International
Provided by IHS under license with ASME
No reproduction or networking permitted without license from IHS
Not for Resale

(e) Cathodic protection rectifiers or other impressed current power source shall be inspected at intervals not exceeding 2 months.

(f) All connected protective devices, including reverse current switches, diodes, and interference bonds, failure of which would jeopardize structure protection, shall be checked at intervals not exceeding 2 months. Other interference bonds shall be checked at least each calendar year but at intervals not exceeding 15 months.

(g) Bare components in a piping system that are not protected by cathodic protection shall be electrically inspected at intervals not exceeding 5 years. The results of this inspection and leak records for the piping components inspected shall be analyzed to determine the location of localized active corrosion areas. Cathodic protection shall be applied at such areas. Inspections and analysis of leak and repair records shall be repeated at intervals not exceeding 5 years.

(h) Buried or submerged piping components exposed for any reason shall be examined for indications of external corrosion. Discovery of active corrosion, general pitting of the component's surface, or a leak caused by corrosion shall be investigated further to determine the cause and extent of the corrosion, and whether cathodic protection shall be installed or augmented to mitigate corrosion or whether the piping system or a portion thereof shall be treated as indicated in paras. 1161.4(b), (c), and (d).

1161.4 Corrective Measures

(a) Criteria on corrosion limits and disposition of corroded pipe are specified in paras. 1151.6.2(a)(6) and (7).

(b) Where inspections or leakage history indicate that active corrosion of metal is taking place in any portion of a piping system to the extent that a safety hazard is likely to result, that portion of the system shall be treated as specified in para. 1151.6.2(a)(6) or (7), and in case of external corrosion of buried or submerged piping, cathodic protection shall be installed or augmented to mitigate the external corrosion.

(c) Pipe that is replaced because of external corrosion shall be replaced with coated pipe.

(d) If a portion of the piping system is repaired, reconditioned, or replaced, or if operating pressure is reduced because of external corrosion, the need for protection of that portion from such corrosion deterioration shall be considered and corrective measures taken to control the corrosion.

1162 EXTERNAL CORROSION: PIPING EXPOSED TO ATMOSPHERE

1162.1 New Installations

Pipe and components that are exposed to the atmosphere shall be protected from external corrosion by use of corrosion-resistant steel or application of protective coating or paint, unless the operating company can demonstrate by test, investigation, or experience in area of application that a corrosive atmosphere does not exist. Protective coating or paint shall be applied to a clean surface and shall be of a suitable material to provide adequate protection from the environment.

1162.2 Existing Piping Systems

Conversion of existing nonslurry piping systems to slurry service must meet the requirements for new installations as stipulated in para. 1162.1. The conversion date of such piping systems shall be regarded as the installation date for the purposes of this Code.

Pipe and components in existing nonslurry systems that are exposed to the atmosphere shall be inspected in accordance with a planned schedule, and any necessary corrective measures shall be taken in accordance with para. 1162.4.

1162.3 Monitoring

Monitoring techniques shall be utilized at intervals not exceeding 3 years to determine the effectiveness of the protective measures or the extent of any corrosion. Appropriate corrective measures shall be taken where examinations or monitoring techniques indicate that adequate protection does not exist.

1162.4 Corrective Measures

(a) Criteria on corrosion limits and disposition of corroded pipe are specified in paras. 1151.6.2(a)(6) and (7).

(b) Where inspection or leakage history indicate that active corrosion of metal is taking place in any portion of a piping system to the extent that a safety hazard is likely to result, that portion of the system shall be treated as specified in para. 1151.6.2(a)(6) or (7), and protective coating or paint shall be repaired or applied to mitigate the corrosion.

(c) Pipe that is replaced shall be replaced with corrosion-resistant steel pipe or coated or painted pipe.

(d) If a portion of the piping system is repaired, reconditioned, or replaced, or if operating pressure is reduced because of corrosion, the need for protection of that portion from such corrosion deterioration shall be considered and corrective measures taken to control the corrosion.

1163 INTERNAL EROSION-CORROSION CONTROL

1163.1 New Installations

(a) It is usually necessary to control erosion-corrosion of slurry pipelines to mitigate premature failure of the line due to reduced wall thickness. Inhibition and/or control of the pH, particle size, and flow velocity of the slurry or internal coating of the pipe may be used to limit erosion-corrosion of slurry pipelines. Other means of dealing with this effect, such as periodic replacement

Copyright ASME International
Provided by IHS under license with ASME
No reproduction or networking permitted without license from IHS
Not for Resale

of components or wear plates, are acceptable. See NACE RP-01-75 for guidance.

(b) If inhibitors are used, they shall be of a type that will not cause deterioration of any piping components and shall be used in sufficient quantity to mitigate internal corrosion.

(c) If internal coatings are used to control erosion-corrosion, they shall meet the quality specifications and minimum dry film thickness established in the industry and be inspected in accordance with industry recommended practices. On piping joined by welding or other methods exposing parent metal at the joints, internal coatings shall include provisions for joint protection such as the use of a suitable corrosion inhibitor.

(d) Wherever changes in flow direction or boundaries occur, such as bends, reducers, obstructions, or discontinuities, localized erosion-corrosion is possible. Means shall be provided to control local erosion-corrosion, such as piping geometry, velocity, particle size distribution, flow regime, wear plates, or other suitable means. Excessive weld penetration, high-low condition of a girth weld, sharp changes in direction, and eccentrically located gaskets should be avoided.

1163.2 Existing Piping Systems

Conversion of existing nonslurry piping systems to slurry service must meet the requirements for new installations as stipulated in para. 1163.1. The conversion date of such piping systems shall be regarded as the installation date for the purposes of this Code.

The operating company shall establish procedures for determining the internal condition of its existing nonslurry piping system and take appropriate action for the conditions found, including, but not limited to, examination and study of records available from previous inspections, and additional inspections and investigations where the need for additional information is indicated. Corrective measures shall be in accordance with para. 1163.4.

1163.3 Monitoring

(a) Initial monitoring techniques and frequencies shall be suitable to determine the effectiveness of the internal erosion-corrosion control program. Subsequent monitoring shall be conducted each calendar year at intervals not exceeding 15 months.

(b) Areas where accelerated localized erosion-corrosion is likely to occur shall be monitored more frequently than stipulated in para. 1163.3(a) as experience dictates.

(c) Whenever any pipe or component in a piping system can be visually examined internally, or any pipe or component is removed from a piping system for any reason, the internal surfaces shall be examined for evidence of general erosion-corrosion as well as localized erosion-corrosion. If evidence of such abnormalities is found, then further examinations of the piping system shall be made to determine its extent.

(d) Corrective actions shall be taken on the basis of the preceding examinations.

1163.4 Corrective Measures

(a) Criteria on erosion-corrosion limits and disposition of eroded-corroded pipe are specified in paras. 1151.6.2(a)(6) and (7).

(b) Where inspections or leakage history indicate that active erosion-corrosion of metal is taking place in any portion of a piping system to the extent that a safety hazard is likely to result, that portion of the system shall be treated as specified in para. 1151.6.2(a)(6) or (7). Corrective measures shall be taken or augmented to mitigate the internal erosion-corrosion.

(c) If a portion of the piping system is repaired, reconditioned, or replaced, or if operating pressure is reduced because of internal erosion-corrosion, the need for protection of that portion from such deterioration shall be considered.

1166 RECORDS

(a) Records and maps showing the location of cathodically protected piping, cathodic protection facilities, and neighboring structures affected by or affecting the cathodic protection system shall be maintained and retained for as long as the piping system remains in service.

(b) Results of tests, surveys, and inspections required by this Chapter to indicate the adequacy of corrosion and erosion control measures, as well as records relating to routine or unusual inspections, such as internal or external line conditions when cutting or hot tapping the line, shall also be maintained for the service life of the piping system.

Copyright ASME International
Provided by IHS under license with ASME
No reproduction or networking permitted without license from IHS
Not for Resale

MANDATORY APPENDIX I
REFERENCED STANDARDS

Specific editions of standards incorporated in this Code by reference, and the names and addresses of the sponsoring organizations, are shown in this Appendix. It is not practical to refer to a specific edition of each standard throughout the Code text; instead, the specific edition reference dates are shown here. Appendix I will be revised at intervals as needed, and issued in Addenda to this Code. An asterisk (*) is used to indicate those standards that have been accepted as American National Standards by the American National Standards Institute (ANSI).

ASTM Specifications

A 6/A 6M-2000
A 20/A 20M-99a
A 29/A 29M-99
A 36/A 36M-2000

A 53-99b

A 105/A 105M-98
A 106-99ε1 [Note (1)]
A 126-95ε1
A 134-96
A 135-97ε1 [Note (1)]
A 139-96ε1

A 181/A 181M-95b
A 182/A 182M-99
A 193/A 193M-99a
A 194/A 194M-99

A 216/A 216M-93 (1998)
A 217/A 217M-99
A 225/A 225M-93 (1999)
A 234/A 234M-99
A 242/A 242M-00

A 283/A 283M-00
A 285/A 285M-90 (1996) ε1

A 307-97
A 320/A 320M-99
A 325-97
A 333/A 333M-99
A 350/A 350M-99

A 354-98
A 377-99
A 381-96
A 395-99

A 420/A 420M-99

A 449-93

A 487/A 487M-93 (1998)
A 490-97

ASTM Specifications (Cont'd)

A 505-00
A 506-93 (1998)
A 507-93 (1998)
A 514/A 514M-00
A 515/A 515M-92 (1997)
A 516/A 516M-90 (1996) ε1
A 517/A 517M-93 (1999)
A 524-96 [Note (1)]
A 530/A 530M-99
A 536-84 (1999) ε1

A 572/A 572M-00
A 573/A 573M-93a (1998)
A 575-96
A 576-90b (1995) ε1

A 633/A 633M-00

A 663-89 (1994) ε1
A 671-96
A 672-96
A 675/A 675M-90a (1995) ε1
A 691-98
A 694/A 694M-00
A 707/A 707M-00

NFPA Codes

*30-1996
*70-1999

AWS Standard

*A3.0-1994

NACE Standards

RP-01-69-96
RP-01-75
RP-01-77-95
RP-01-75

MSS Standard Practices

SP-6-1996
SP-25-1998
SP-44-1996
SP-55-1996
*SP-58-1993
SP-69-1996
SP-70-1998
SP-71-1997
SP-72-1987
SP-75-1998
SP-78-1998

API Standards and Other Publications

Std. 5B, 14th Ed., 1996
Spec. 5L, 42nd Ed., 2000
(Incorporates 5LS and 5LX)
Spec. 5LU, 3rd Ed., 1980
RP 5L1, 5th Ed., 1996
RP 5LW, 2nd Ed., 1996
(Incorporates 5L1, 5L5, and 5L6)
Spec. 6D, 21st Ed., 1994
Spec. 12D, 10th Ed., 1994
Spec. 12F, 11th Ed., 1994

*Std. 650, 10th Ed., 1998

RP 1102, 6th Ed., 1993
*Std. 1104, 19th Ed., 1999
RP 1109, 2nd Ed., 1993

Copyright ASME International
Provided by IHS under license with ASME
No reproduction or networking permitted without license from IHS
Not for Resale

API Standards and Other Publications (Cont'd)	ASME Codes and Standards	ASME Codes and Standards (Cont'd)
RP 1110, 4th Ed., 1997	*ASME Boiler and Pressure Vessel Code, 1998 Ed. and 1999 Addenda	*B16.11-1996
RP 1111, 3rd Ed., 1999		*B16.20-1998 & Addenda 2000
	*B1.1-1998	*B16.21-1992
	*B1.20.1-1983 (R1992)	*B16.25-1997
	*B1.20.3-1976 (R1998)	*B16.28-1994
		*B16.34-1995
	*B16.1-1998	*B31G-1991
	*B16.4-1998	*B36.10M-1996
	*B16.5-1996	*B36.19M-1985 (R1994)
	*B16.9-1993	**AWWA Codes and Standards**
	*B16.10-1992	AWWA D 100

GENERAL NOTE: The issue date shown immediately following the number of the standard (e.g., A 53-96, B1.1-1998, and SP-6-1996 is the effective date of issue (edition) of the standard.

NOTES:

(1) Approved only if mill hydrostatic test is performed.

Specifications and standards of the following organizations appear in Appendix A:

ANSI American National Standards Institute, Inc.
25 West 43rd Street
New York, NY 10036
212 642-4900

API American Petroleum Institute
Order Desk
1220 L Street, N.W.
Washington, DC 20005-4070
202 682-8375

ASME The American Society of Mechanical Engineers
Three Park Avenue
New York, NY 10016-5990
212 591-8500

ASME Order Department
22 Law Drive
Box 2900
Fairfield, NJ 07007-2900
800 843-2763
201 882-1167

ASTM American Society for Testing and Materials
100 Bar Harbor Drive
West Conshohocken, PA 19428-2959
610 832-9500

AWS American Welding Society
P.O. Box 351040
550 N.W. LeJeune Road
Miami, FL 33126
305 443-9353

MSS Manufacturers Standardization Society of the Valve and Fittings Industry, Inc.
127 Park Street, N.E.
Vienna, VA 22180
703 281-6613

NACE National Association of Corrosion Engineers
1440 South Creek Drive
P.O. Box 218340
Houston, TX 77218-8340
713 492-0535

NFPA National Fire Protection Association
1 Batterymarch Park
Quincy, MA 02269-9101
617 770-3000

Copyright ASME International
Provided by IHS under license with ASME
No reproduction or networking permitted without license from IHS
Not for Resale

MANDATORY APPENDIX II
SUBMITTAL OF TECHNICAL INQUIRIES TO THE B31 PRESSURE PIPING COMMITTEE

II-1 INTRODUCTION

The ASME B31 Pressure Piping Committee and its Section Committees meet regularly to consider revisions of the Code rules, new Code rules as dictated by technological development, Code Cases, and Code interpretations. This Appendix provides guidance to Code users for submitting technical inquiries to the Committee. Technical inquiries include requests for revisions or additions to the Code rules, requests for Code Cases, and requests for Code interpretations.

Code Cases may be issued by the Committee when the need is urgent. Code Cases clarify the intent of existing Code requirements or provide alternative requirements. Code Cases are written as a question and a reply and are usually intended to be incorporated into the Code at a later date. Code interpretations provide the meaning of or the intent of existing rules in the Code and are also presented as a question and a reply. Both Code Cases and Code interpretations are published by the Committee.

The Code rules, Code Cases, and Code interpretations established by the Committee are not to be considered as approving, recommending, certifying, or endorsing any proprietary or specific design or as limiting in any way the freedom of manufacturers or constructors to choose any method of design or any form of construction that conforms to the Code rules.

As an alternative to the requirements of this Appendix, members of the Committee and its Section Committees may introduce requests for Code revisions or additions, Code Cases, and Code interpretations at their respective Committee meetings or may submit such requests to the secretary of a Section Committee.

Inquiries that do not comply with the provisions of this Appendix or that do not provide sufficient information for the Committee's full understanding may result in the request being returned to the inquirer with no action.

II-2 INQUIRY FORMAT

Submittals to the Committee shall include:

(a) Purpose. Specify one of the following:

(1) revision of present Code rule(s)

(2) new or additional Code rule(s)

(3) Code Case

(4) Code interpretation

(b) Background. Provide the information needed for the Committee's understanding of the inquiry, being sure to include reference to the applicable Code Section, Edition, Addenda, paragraphs, figures, and tables. Preferably, provide a copy of the specific referenced portions of the Code.

(c) Presentations. The inquirer may desire or be asked to attend a meeting of the Committee to make a formal presentation or to answer questions from the Committee members with regard to the inquiry. Attendance at a Committee meeting shall be at the expense of the inquirer. The inquirer's attendance or lack of attendance at a meeting shall not be a basis for acceptance or rejection of the inquiry by the Committee.

II-3 CODE REVISIONS OR ADDITIONS

Requests for Code revisions or additions shall provide the following:

(a) Proposed Revision(s) or Additions(s). For revisions, identify the rules of the Code that require revision and submit a copy of the appropriate rules as they appear in the Code marked up with the proposed revision. For additions, provide the recommended wording referenced to the existing Code rules.

(b) Statement of Need. Provide a brief explanation of the need for the revision(s) or addition(s).

(c) Background Information. Provide background information to support the revision(s) or addition(s) including any data or changes in technology that form the basis for the request that will allow the Committee to adequately evaluate the proposed revision(s) or addition(s). Sketches, tables, figures, and graphs should be submitted as appropriate. When applicable, identify any pertinent paragraph in the Code that would be affected by the revision(s) or addition(s) and paragraphs in the Code that reference the paragraphs that are to be revised or added.

II-4 CODE CASES

Requests for Code Cases shall provide a statement of need and background information similar to that defined in II-3(b) and II-3(c), respectively, for Code revisions or additions. The proposed Code Case should

Copyright ASME International
Provided by IHS under license with ASME
No reproduction or networking permitted without license from IHS
Not for Resale

identify the Code Section and be written as a question and a reply in the same format as existing Code Cases.

II-5 CODE INTERPRETATIONS

Requests for Code interpretations shall provide the following:

(a) Inquiry. Provide a condensed and precise question, omitting superfluous background information, and, when possible, composed in such a way that a "yes" or a "no" reply, possibly with brief provisos, is acceptable. The question should be technically and editorially correct.

(b) Reply. Provide a proposed reply that will clearly and concisely answer the inquiry question. Preferably, the reply should be "yes" or "no" possibly with brief provisos.

(c) Background Information. Provide any background information that will assist the Committee in understanding the proposed inquiry and reply.

II-6 SUBMITTAL AND RESPONSE

Submittals to and responses from the Committee shall meet the following:

(a) Submittal. Inquiries from Code users shall preferably be submitted in typewritten form; however, legible handwritten inquiries will also be considered. They shall include the name, address, telephone number, and fax number, if available, of the inquirer and be mailed to the following address:

Secretary
ASME B31 Committee
Three Park Avenue
New York, NY 10016-5990

(b) Response. The Secretary of the appropriate Section Committee shall acknowledge receipt of each properly prepared inquiry and shall provide a written response to the inquirer upon completion of the requested action by the appropriate Section Committee.

Copyright ASME International
Provided by IHS under license with ASME
No reproduction or networking permitted without license from IHS
Not for Resale

INDEX

Abandoning a piping system, 1157
Accidental ignition, prevention of, 1152.7
Additive circumferential stresses, 1102.3.2(e), 1134.13.4(c), 1151.9(b)
Additive longitudinal stresses, 1102.3.2(d)
Allowable stresses and other stress limits, 1102.3
Allowances and tolerances, wall thickness, 1102.4
Ambient influences, 1101.4
Anchoring, 1119.1(c), (d), 1121.1(c)
Assembly of piping components, 1135
Attachments to piping, 1104.3.4
Auxiliary piping, 1122

Backfilling, 1134.11
Bending, properties, unidentified pipe, 1137.6.2
Bends, pipe
  design, 1104.2.1
  fabrication, 1134.7.1
  flattening, 1134.7.1(b)
  mitered bends, 1106.2.2, 1134.7.2
  radius, 1106.2.1(b)
  wrinkle bends, 1106.2.4
Bolting, 1108.5, 1125.4
  procedure, 1135.2
  specifications Table, 1123.1
Branch connections, 1104.3.1
Building installation, 1134.20.3
Butt welds, 1111.2, 1134.8.6(a)
  type groove and joint design, 1134.8.6(a)

Casings under railroads and highways, 1134.13.4(b), 1151.9(a), 1161.1.2(f)
Cast iron, 1123.2.4
  flanges, 1108.1.1(c)
  valves, 1107.1(b)
Cathodic protection system, 1161.1.3
Changes affecting safety, 1150.2(d)
Circumferential stresses, additive, 1102.3.2(e), 1134.13.4(c), 1151.9(b)
Clearance, pipelines and underground structures, 1134.6(c)
Closures
  design, 1104.4
  selection and limitations, 1106.6
Coating, protective, application and inspection, 1136.5.1(b), 1151.6.2(c)(10), 1161.1.2, 1162.1(c), 1163.1, 1164(a)
Cold worked steel pipe, special requirements, Table 1102.3.1(a), 1102.3.1(d), 1105.2.1(d), 1134.7.1(a)
Combined stress calculations, 1119.6.4
Combustible materials, storage of, 1152.4
Communications, 1151.2
Connections to main lines, 1134.16
Construction specifications, 1134.1
Contraction, thermal, 1101.7
Control piping, 1122.3
Corrective measures for erosion-corrosion control, 1163.4
Corrosion limits, 1151.6.2(a)(6), (7)
Corrosion records, 1155, 1165
Coupled joints, 1118.1
Couplings, 1106.3
Cover, minimum for buried pipelines, Table 1134.6(a)
Crosses
  design, 1104.3.1(a)
  selection and limitations, 1106.5
Crossings, 1134.13
  bridge attachments, 1134.13.3
  highway crossings, 1134.13.4, 1151.9
  overhead structures, 1134.13.2
  railroad crossings, 1134.13.4, 1151.9
  river and stream crossings, 1134.13.1
  safety precautions, 1134.3.2(c)
  underground structures, 1134.6(c)
  nderwater construction, 1134.13.1(a)
Currents, dynamic effects, 1101.5.6
Curved segments of pipe, 1104.2
Cutting and welding, safe practices in, 1134.8.1(c), 1151.6.1, 1151.6.2(c)(1), 1152.7(c)

Dead loads, 1101.6.2
Definitions, 1100.2
Derating, operating pressure, 1151.7
Design
  auxiliary and other specific piping, 1122
  conditions, 1101
  criteria, 1102, 1103
  expansion and flexibility, 1119
  external pressure, 1101.2.3, 1104.1.3
  factor, 1102.3.1
  internal pressure, 1101.2.2, 1104.1.2
  loads on pipe supporting elements, 1120
  pipe supporting elements, 1121
  pressure design of piping components, 1104
  closures, 1104.4
  curved segments of pipe, 1104.2
  flanges, 1104.5
  intersections, 1104.3
  reducers, 1104.6

Copyright ASME International
Provided by IHS under license with ASME
No reproduction or networking permitted without license from IHS
Not for Resale

straight pipe, 1104.1
other pressure containing components, 1104.7
selection and limitations of piping components
fittings, elbows, bends, and intersections, 1106
flanges, facings, gaskets, and bolting, 1108
pipe, 1105
valves, 1107
selection and limitation of piping joints flanged, 1112
sleeve, coupled, and other patented joints, 1118
threaded, 1114
welded, 1111
temperature, 1101.3.1

Dikes or firewalls, 1134.21.5
Dimensional requirements, 1126
Disposal piping, 1122.6
Ditching, 1134.6
Dynamic effects, 1101.5

Earthquake, dynamic effect, 1101.5.3
Elbows
design, 1104.2.2
installation, 1134.7.3
selection and limitations, 1106.2.3
Electrical installations, 1134.22, 1161.1.3(c)
Electrical interference, corrosion control, 1161.1.6
Electrical isolation, corrosion control, 1161.1.4
Electrical test leads for corrosion control, 1161.1.5
Emergency plan, 1150.2(c), 1154
Erosion-corrosion allowance, 1102.4.1
Erosion-corrosion control pipelines
cathodic protection system, 1161.1.3
corrective measures, 1163.4
electrical interference, 1161.1.6
electrical isolation, 1161.1.4
electrical test leads, 1161.1.5
external corrosion, 1134.19, 1153, 1160, 1161, 1163
internal corrosion, 1134.19, 1153, 1160, 1162
monitoring, 1161.3, 1162.3, 1163.3
protective coatings, application andinspection, 1136.5.1(b), 1151.6.2(c)(10), 1161.1.2, 1162.1(c), 1163.1, 1164(a)(3)
pump stations, tank farms, and terminals, 1161.1.1(b), 1161.2(b)
Expansion, allowable stresses, 1102.3.2(c)
Expansion, fluid effects, 1101.4.2
Expansion, thermal, 1101.7
Expansion and flexibility, 1119
Expansion coefficient, 1119.6.1
External corrosion, 1134.19, 1153, 1160, 1161, 1163
External design pressure, 1101.2.3, 1104.1.3
Extruded outlet headers, 1104.3.1(b)

Fabrication (construction), 1134
Fencing, 1134.20.2, 1134.21.2, 1152.5
Ferrous pipe, 1105.2.1
Fillet welds, 1134.8.6(b)
Fire protection, 1134.20.7
Firewalls, dikes or, 1134.21.5
Fish tails and flat closures, 1106.6.3
Fittings
design, 1104.2.2, 1104.3.1(a), 1104.5, 1104.6, 1104.7
dimensions, 1126
flexibility and stress intensification factors, 1119.6.4(c)
installation, 1134.7
materials, 1123
selection and limitations, 1106, 1108
Flanged joints, selection and limitation, 1112
Flanges
attachment, welding details for, 1134.8.6(b)
bolting, 1108.5, 1125.4
bolting specifications, Tables 1123.1, 1126.1
cast iron, 1108.1.1(c)
facings, 1108.3
pressure design, 1104.5
selection and limitations, 1108
specifications, Tables 1123.1, 1126.1
Flattening, pipe bends, 1134.7.1(b)
Flattening test for pipe, 1137.6.2(a)
Flexibility, expansion and, 1119
Flexibility factors, 1119.6.4(c)
Fluid expansion effect, 1101.4.2

Gas pockets, welds, 1134.8.5(b)
Gaskets, selection and limitation, 1108.4
General corrosion, 1151.6.2(a)(6)
General statements, 1100
Girth welds, 1134.8
Gouges in pipe, 1134.5, 1136.5.1(a)(2), 1151.6.2
Groove type, butt welds, 1134.8.6(a)
Grooves in pipe, 1134.5, 1136.5.1(a)(2), 1151.6.2
Grooving allowance, 1102.4.2

Hangers and supports, 1121
Headers, extruded outlet, 1104.3.1(b)
Heads, 1104.4
Highway crossings, 1134.13.4, 1151.9
Holder (storage), pipe, 1134.21.3(d)
Hot taps, 1151.6.1, 1151.6.2(b), 1151.6.2(c)
Hydrostatic test, 1137.1.4(a)(2), 1137.4.1, 1151.6.3(a)

Ignition, prevention of accidental, 1152.7
Impact, dynamic effect, 1101.5.1
Imperfections, limits and disposition, 1151.6.2(a)
Inland coastal water construction, 1134.14
Inquiries, Appendix B
Inspection
during construction, 1134.2, 1136

Copyright ASME International
Provided by IHS under license with ASME
No reproduction or networking permitted without license from IHS
Not for Resale

operation and maintenance
pipelines, 1151
pump stations, terminals, and tank farms, 1152
welding, 1134.8.5, 1151.6.3
Inspector qualification, 1136.2
Installation
connections to main lines, 1134.16
electrical facilities, 1134.22.3, 1161.1.3(c)
electrical test leads, 1161.1.5
instrument and other auxiliary piping, 1135.5
line markers, 1134.18, 1151.3
liquid metering facilities, 1134.23
liquid strainers and filters, 1134.24
manifolds, 1135.4
pipe in the ditch, 1134.11
protective coatings, 1161.1.2, 1163.1
pump station, tank farm, and terminal facilities, 1134.20
pumping unit piping, 1135.3
scraper traps, 1134.17
special crossings, 1134.13
storage and working tankage, 1134.21
valves, 1134.15
Instruments and other auxiliary piping, 1122.3, 1135.5
Intensification factors, Figure 1119.6.4(c)
Internal corrosion, 1134.19, 1153, 1160, 1162
Internal design pressure, 1101.2.2
Internal pressure design equation for pipe, 1104.1.2
Interpass temperature for welding, 1134.8.8(a)
Intersections
design, 1104.3
selection and limitations, 1106.5
Iron, cast, malleable, and wrought, 1123.2.4

Joint factor E for weld seam of pipe, 1102.4.3
determination of, 1137.6.4
Joint selection and limitations
flanged joints, 1112
sleeve, coupled, and other patented joints, 1118
threaded joints, 1114
welded joints, 1111

Lapped flanges, 1108.1.1(b)
Leak records, 1155
Leak repairs, 1151.6.2(b), (c)
Leak tests for pipelines to operate at 20% or less of SMYS, 1137.1.4(a)(3), 1137.4.3
Limitations
fittings, elbows, bends, and intersections, 1106
flanges, facings, gaskets, and bolting, 1108
materials, 1123.2
pipe, 1105
valves, 1107
Limits of imperfections, 1151.6.2(a)
Line markers, 1102.1, 1134.18, 1151.3
Loads
currents, dynamic effects, 1101.5.6
dead, 1101.6.2
external, 1134.13.4(c), 1151.9(b)
live, 1101.6.1
occasional, 1102.3.3
pipe supporting elements, 1120
sustained and thermal expansion, 1102.3.2
waves, dynamic effects, 1101.5.6
wind, 1101.5.2
Localized corrosion pitting, 1151.6.2(a)(7)
Location of
pump stations, 1134.20.2
storage and working tankage, 1134.21.2
valves, 1134.15
Longitudinal stresses, 1102.3.2(d)
Longitudinal weld seam joint factor E for pipe, 1102.4.3

Maintenance
pipeline, 1151
plans and procedures, 1150
pump stations, terminals, and tank farms, 1152
relief valves, pressure limiting devices, etc, 1152.3
valves, 1151.7
Malleable iron, 1123.2.4
Markers, line, 1102.1, 1134.18, 1151.3
Materials, 1123
limitations, 1123.2
qualification of, 1123.1(b)
specifications, 1123.1
Maximum steady state operating pressure, 1101.2.2, 1151.1, 1151.7, 1156(b)
Meters, 1134.23
Mitered bends
fabrication, 1134.7.2
limitations, 1106.2.2
Modulus of elasticity, 1119.6.2
Monitoring, corrosion control, 1161.3, 1162.3, 1163.3
Monitoring, flow, 1152.1(b)
Multiple openings, reinforcement, 1104.3.1(e)

Nominal wall thickness, 1104.1.1
Normal operating conditions, 1102.2.3
Normal operation, variations from, 1102.2.4

Offshore and inland coastal water construction, 1134.14
Operating pressure, 1101.2.2, 1151.1, 1151.7, 1156
Operation and maintenance
pipeline, 1151
plans and procedures, 1150.2
procedures affecting safety, 1150
pump station, terminal, and tank farm, 1152
qualifying for a higher operating pressure, 1156
records, 1155

Copyright ASME International
Provided by IHS under license with ASME
No reproduction or networking permitted without license from IHS
Not for Resale

Orange peel bull plugs, 1106.6.3
Orange peel swages, 1106.4.2
Organizations, standards and specifications of App. A
Overpressuring, protection against, 1102.2.4

Patrolling, 1151.5
Pipe, steel
  bends, 1104.2.1
  buckles, 1134.5, 1136.5.1(a)(2)
  coated or lined, 1105.2.1(e)
  cold worked steel, special
  limitations, Table 1102.3.1(a), 1102.3.1(d), 1134.7.1(a), 1105.2.1(d)
  dents, 1134.5, 1136.5.1(a)(2), 1151.6.2
  design, 1104.1
  end of preparations, standard, 1134.8.6(a)
  expansion and flexibility, 1119
  flattening, test for, 1137.6.2(a)
  gouges and grooves, 1134.5, 1136.5.1(a)(2), 1151.6.2
  handling, hauling, stringing, and storing, 1134.4
  hangers, 1121.1(e)
  holder for storage, 1134.21.3(d)
  inspection, 1136
  installation of, in the ditch, 1134.10
  installation of, special crossings, 1134.13
  joint factor E for weld seam, 1102.4.3
  limitations of design values, 1102.3.1(g)
  protection from unusual external conditions, 1102.1
  protective coatings, 1136.5.1(b), 1151.6.2(c)(10), 1161.1.2, 1162.1(c), 1163.1, 1164(a)(3)
  qualification of ASTM A 120, 1105.2.1(c)
  reuse of, 1105.2.1(b), (c)
  selection and limitations, 1105
  specifications, list of, Table 1123.1, Table 1126.1
  specified minimum yield strength, Table 1102.3.1(a)
  supporting elements, loads and design, 1120, 1121
  surface requirements, 1134.5
  testing, 1137, 1151.6.3, 1156(b)
  threads, 1114.1, 1126.3
  unidentified or used, limitations, 1105.2.1(b), (c)
  unidentified, S value, 1102.3.1(c)
  used, S value, 1102.3.1(b)
  welding, 1134.8
Pipeline repairs, 1151.6
Pipelines on bridges, 1134.13.3
Pipe-type holders (storage), 1134.21.3(d)
Piping
  abandoning of, 1157
  anchorage for
    buried, 1119.1(b), (c), 1119.7.3(e)
    exposed, 1119.1(d), 1119.7.3(e), 1121.1
  control, instrument, and other auxiliary, 1122.3, 1135.5
  hangers, 1121.1(e)
  pressure disposal, 1122.6
  supports for, 1120, 1121
  testing, 1137, 1151.6.3
  welding, 1134.8
Pitting, localized corrosion, evaluation of, 1151.6.2(a)(7)
Plan, emergency, 1150.2(c), 1154
Plans and procedures, operation and maintenance, 1150
Platform risers, 1151.10
Plugs, orange peel bull, 1106.6.3
Pneumatic, testing, 1137.4.3
Poisson's ratio 1119.6.3
Preheating, and interpass temperature for welding, 1134.8.8
Pressure
  derating, 1151.7
  design, 1101.2, 1104
  disposal piping, 1122.6
  limiting devices
  capacity of, 1102.2.4
  installation, 1134.20.6
  testing, 1137.1.4(c), 1152.2
  maximum steady state operating, 1101.2.2, 1151.1, 1156
  qualifying for higher operating, 1156
  ratings, 1102.2
  testing, 1137, 1151.6.3, 1156(b)
Prevention of accidental ignition, 1152.7
Procedures, operation and maintenance, 1150
Procedures, pipe bending, 1134.7.1
Procedures and welders, qualification of, 1134.8.3
Proof tests, 1104.7
Proprietary items, 1100.1.2(g)
  limitations, 1123.2.4(b)
Protection
  pipelines against unusual external conditions, 1102.1
Protective coatings, 1136.5.1(b), 1151.6.2(c)(10), 1161.1.2, 1162.1(c), 1163.1, 1164(a)(3)
Pump stations, tank farms, and terminals, 1134.20
  building installation, 1134.20.3
  corrosion control, 1161.1.1(b), 1161.2(b)
  electrical facilities, 1134.22
  fenced areas, 1134.20.2, 1152.5
  fire protection, 1134.20.7
  location, 1134.20.2
  operation and maintenance, 1152
  piping, 1134.20.5
  pressure disposal piping, 1122.6
  pumping equipment and prime movers, 1134.20.4
  safety devices, 1134.20.6
  testing, 1137, 1156(b)

Qualification
  inspectors, 1136.2
  materials, 1123
  procedures and welders, 1134.8.3

Copyright ASME International
Provided by IHS under license with ASME
No reproduction or networking permitted without license from IHS
Not for Resale

records, welding, 1134.8.3(d)
Qualifying system for higher pressure, 1156

Radiograph examination
crossings, 1134.8.5
field welds, 1134.8.5, 1151.6.3
procedures, 1134.8.5(a)(2)
tie-ins, 1134.8.5, 1137.1.4(b), 1151.6.3
Radius, pipe bends, 1106.2.1(b)
Railroad crossings, 1134.13.4, 1151.9
Railroad transportation of pipe, 1134.4
Ratings, pressure, 1102.2
Records
corrosion of pipelines, 1155, 1165
design, construction, and testing, 1137.7
inspections, 1155(e), 1165(b)
pipeline leaks, 1155(d)
pipeline patrol, 1155(b)
qualifying system for higher pressure, 1156(d)
welders qualification tests, 1134.8.3(d)
welding procedures, 1134.8.3(d)
Reducers
design, 1104.6
selection and limitations, 1106.4
Referenced standards Appendix A
Reinforcement
extruded outlets, 1104.3.1(b)
welded branch connections, 1104.3.1(c), (d), (e)
Relief valves
inspection and testing of, 1137.1.4(c), 1152.2
installation, 1134.20.6
Removal or repair of defects or imperfections
arc burns, 1134.8.7(a), 1151.6.2
welds, 1134.8.7(b), 1151.6.2
other, 1134.5, 1134.8.7(c), 1151.6.2
Repairs, pipeline, 1151.6
Repairs, testing, 1151.6.3
Responsibility for qualification of procedures and welders, 1134.8.3(e)
Reuse of steel pipe, 1105.2.1(b), (c)
Right of way, 1134.3, 1151.4
Risers, platform, 1151.10
Road and highway crossings, 1134.13.4, 1151.9

Safety devices
installation, 1134.20.6
maintenance, 1152.2
testing, 1137.1.4(c), 1152.2
Scope, 1100.1
Scraper traps, 1134.17
Signs, 1152.6
Slag inclusions, welds, 1134.8.5(b)
Smoking, 1152.7
Spacing of valves, 1134.15.2
Specification ASTM A 120 pipe, qualification, 1105.2.1(c)
Specifications
electrical installations, 1134.22, 1161.1.3(e)
list of Appendix A material, 1123.1
pipeline construction, 1134.1
pump station construction, 1134.20
storage and working tankage, 1134.21
Specified minimum yield strength Table, 1102.3.1(a)
Spiral weld seam joint factor E for pipe, 1102.4.3
Standards, dimensional, 1126.1
Standards and specifications, Tables 1123.1, 1126.1, Appendix A
Standards of acceptability of welds, 1134.8.5(b)
Storage and working tankage, 1134.21, 1152.3
Storage of combustible materials, 1152.4
Stress
analysis (flexibility), 1119.7
calculations, combined, 1119.6.4
intensification factors Figure, 1119.6.4(c)
limits, 1102.3
occasional loads, 1102.3.3
sustained loads and thermal expansion, 1102.3.2
relieving, 1134.8.9, 1135.4.3, 1135.4.4
Stresses, allowable, 1102.3
Subsidence, dynamic effect, 1101.5.5
Supports, braces and anchors, 1121.1
Surface defects, 1134.5, 1136.5.1
Surveying and staking or marking, 1134.3.3
Swages, orange peel, 1106.4.2

Tankage, 1134.21, 1152.3
Tank farms, pump stations, and terminals, 1134.20, 1152
Taps, hot, 1151.6.1, 1151.6.2(b), (c)
Tees
design, 1104.3.1(a)
selection and limitations, 1106.5
Temperature, 1101.3
Terminals, pump stations, and tank farms, 1134.20, 1152
Test leads, corrosion control, 1161.1.5
Test pressure, 1137.4
Test requirements, 1137, 1151.6.3, 1156(b)
Testing, 1137
after construction, 1137.1.4
fabricated items, 1137.1.3
leak, 1137.4.3
pressure limiting devices, 1137.1.4(a)
qualifying for higher operating pressure, 1156(b)(2)
records, 1137.7, 1156(d)
repairs, 1151.6.3
systems or parts of systems, 1137.1.4(a)
tie-ins, 1134.8.5, 1137.1.4(b), 1151.6.3
unidentified or used steel pipe, 1137.6
welding, 1134.8.5
Tests
corrosion control, 1161.3, 1162.3, 1163.3

Copyright ASME International
Provided by IHS under license with ASME
No reproduction or networking permitted without license from IHS
Not for Resale

leak, for pipelines to operate at 20% or less of SMYS, 1137.1.4(a)(3), 1137.4.3
qualification, unidentified or used steel pipe, 1137.6
welding, 1134.8.5, 1151.6.3(b)
Thermal expansion, 1119
coefficient of, 1119.6.1
Thickness, steel pipe
design, 1104.1
determination, unidentified or used, 1137.6.3
Tie-ins, 1134.8.5, 1134.9, 1137.1.4(b), 1151.6.3
Tolerances, wall thickness and defect, 1102.4.5
Transition nipples, 1134.7.3(b), 1134.8.6(a)

Undercutting welds, 1134.8.5(b)
Unidentified or used steel pipe
limitations, 1105.2.1(b), (c)
qualification tests, 1137.6
bending properties, 1137.6.2
minimum yield strength value, 1137.6.7
visual examination, 1137.6.1
wall thickness, 1137.6.3
weld seam joint factor E, 1137.6.4
weldability, 1137.6.5
yield strength determination, 1137.6.6

Valves
dimensional requirements, 1126
installation and location, 1134.15
maintenance
pipeline, 1151.8
relief valves, etc., 1152.2
materials, 1123
selection and limitations, 1107
spacing, 1134.15.2
specification and standards Table, 1123.1
testing relief valves, etc., 1137.1.4(c), 1152.2
Vibration, dynamic effect, 1101.5.4

Wall thickness, steel pipe
allowances and tolerances, 1102.4
least nominal, 1104.1
unidentified or used steel pipe, 1137.6.3
Waves, dynamic effects, 1101.5.6
Weight effects, 1101.6
Weldability, unidentified or used steel pipe, 1137.6.5
Welded branch connections, 1104.3.1(c), (d), (e)
Welders
qualification of, 1134.8.3
requalification requirements, 1134.8.3(c)
Welding, 1134.8
arc burns, 1134.8.7(a), 1136.5.1(a)(2), 1151.6.2(a)(3), (b)(4), (b)(5)
details for openings
with encirclement, Figure 1104.3.1(c)(1)
with localized reinforcement, Figure 1104.3.1(c)(2)
without reinforcement, Figure 1104.3.1(c)(3)
end treatment, acceptable
equal thickness, Figure 1134.8.6(a)-(1)
unequal thickness, Figure 1134.8.6(a)-(2)
filler metal, 1134.8.2
general, 1134.8.1
inspection and tests, 1134.8.5(a), 1136.5.1(b)(4), (b)(5), 1136.5.2(a), (b), 1151.6.3
maintenance, 1151.6
preheating and interpass temperature for, 1134.8.8
processes, 1134.8.2
procedure, 1134.8.3
qualification of procedures and welders, 1134.8.3, 1151.6.2(c)(1), (c)(2)
qualification records, 1134.8.3(d)
responsibility for qualification, 1134.8.3(e)
safe practices in cutting and welding, 1134.8.1(c), 1151.6.1, 1151.6.2(c)(1), 1152.7(c)
standards of acceptability, 1134.8.5(b)
stress relieving, 1134.8.9
terms, 1134.8.1(b)
tests, 1134.8.5(a), 1136.5.2(a), (b), 1151.6.3
variables, 1134.8.3(b)
Welds
burn-through areas, 1134.8.5(b)
cracks in, 1134.8.5(b)
discontinuities in, 1134.8.5(b)
fillet, 1134.8.6(b)
gas pockets, 1134.8.5(b)
inadequate penetration and incomplete fusion, 1134.8.5(b)
porosity, 1134.8.5(b)
removal or repair of defects, 1134.8.7(b)
slag inclusions, 1134.8.5(b)
tack, 1134.8.6(c)
types of, 1134.8.6
undercutting, 1134.8.5(b)
Wind, dynamic effect, 1101.5.2
Wrinkle bends, 1106.2.4

Yield strength
specified minimum, steel pipe, Table 1102.3.1(a)
unidentified or used steel pipe, 1137.6.6, 1137.6.7

Copyright ASME International
Provided by IHS under license with ASME
No reproduction or networking permitted without license from IHS
Not for Resale

ASME CODE FOR PRESSURE PIPING, B31

Power Piping B31.1-2001
Fuel Gas Piping ..... B31.2[1]-1968
Process Piping B31.3-2002
Pipeline Transportation Systems for Liquid Hydrocarbons and Other Liquids B31.4-2002
Refrigeration Piping and Heat Transfer Components B31.5-2001
Gas Transmission and Distribution Piping Systems B31.8-1999
Building Services Piping B31.9-1996
Slurry Transportation Piping Systems B31.11-2002
Manual for Determining the Remaining Strength of Corroded Pipelines: ASupplement to ASME B31 Code for Pressure Piping ... B31G-1991

NOTE:

(1) USAS B31.2-1968 was withdrawn as an American National Standard on February 18, 1988. ASME will continue to make available USAS B31.2-1968 as a historical document for a period of time.

The ASME Publications Catalog shows a complete list of all the Standards published by the Society. For a complimentary catalog, or the latest information about our publications, call 1-800-THE-ASME (1-800-843-2763).

Copyright ASME International
Provided by IHS under license with ASME
No reproduction or networking permitted without license from IHS
Not for Resale

ASME Services

ASME is committed to developing and delivering technical information. At ASME's Information Central, we make every effort to answer your questions and expedite your orders. Our representatives are ready to assist you in the following areas:

ASME Press
Codes & Standards
Credit Card Orders
IMechE Publications
Meetings & Conferences
Member Dues Status
Member Services & Benefits
Other ASME Programs
Payment Inquiries
Professional Development
Short Courses
Publications
Public Information
Self-Study Courses
Shipping Information
Subscriptions/Journals/Magazines
Symposia Volumes
Technical Papers

How can you reach us? It's easier than ever!

There are four options for making inquiries* or placing orders. Simply mail, phone, fax, or E-mail us and an Information Central representative will handle your request.

Mail
ASME
22 Law Drive, Box 2900
Fairfield, New Jersey
07007-2900

Call Toll Free
US & Canada: 800-THE-ASME
(800-843-2763)
Mexico: 95-800-THE-ASME
(95-800-843-2763)
Universal: 973-882-1167

Fax—24 hours
973-882-1717
973-882-5155

E-Mail—24 hours
Infocentral@asme.org

* Information Central staff are not permitted to answer inquiries about the technical content of this code or standard. Information as to whether or not technical inquiries are issued to this code or standard is shown on the copyright page. All technical inquiries must be submitted in writing to the staff secretary. Additional procedures for inquiries may be listed within.

Copyright ASME International
Provided by IHS under license with ASME
No reproduction or networking permitted without license from IHS
Not for Resale

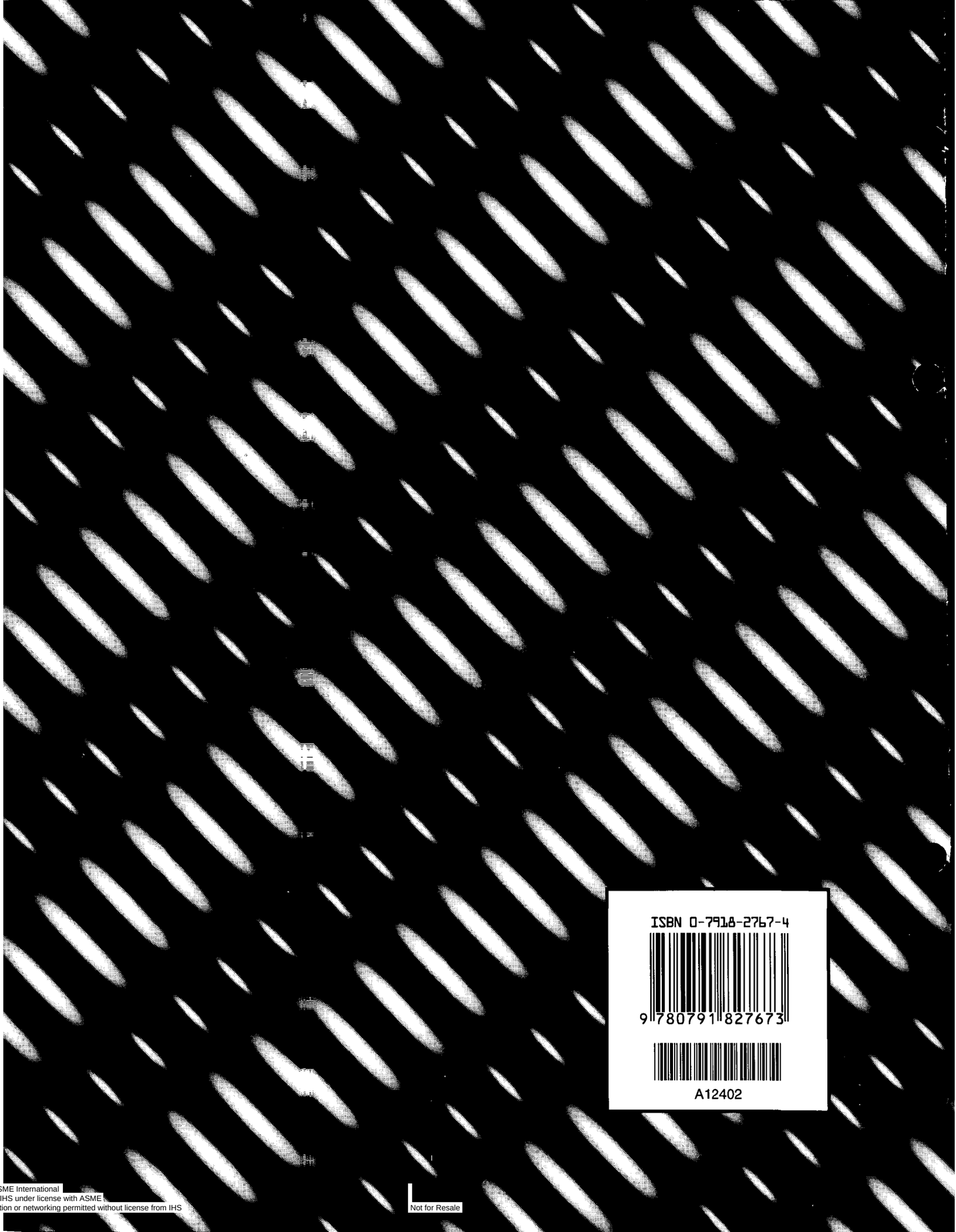

ISBN 0-7918-2767-4

A12402

Copyright ASME International
Provided by IHS under license with ASME
No reproduction or networking permitted without license from IHS

Not for Resale