ASME B31.1-2004

(Revision of ASME B31.1-2001)

Power Piping

ASME Code for Pressure Piping, B31

AN AMERICAN NATIONAL STANDARD



The American Society of Mechanical Engineers

Copyright ASME International
Provided by IHS under license with ASME
No reproduction or networking permitted without license from IHS

Not for Resale

The American Society of Mechanical Engineers

AN AMERICAN NATIONAL STANDARD

POWER PIPING

ASME B31.1-2004

(Revision of ASME B31.1-2001)

ASME CODE FOR PRESSURE PIPING, B31

Copyright ASME International
Provided by IHS under license with ASME
No reproduction or networking permitted without license from IHS

Not for Resale

Date of Issuance: August 16, 2004

Mandatory Date: February 16, 2005

This Edition was approved by the American National Standards Institute and designated ASME B31.1-2004 on January 14, 2004

The 2004 Edition of this Code is being issued with an automatic update service that includes Addenda, Interpretations, and Cases. The next Edition is scheduled for publication in 2007.

The use of Addenda allows revisions made in response to public review comments or committee actions to be published on a regular basis; revisions published in Addenda will become effective 6 months after the Date of Issuance of the Addenda.

ASME issues written replies to inquiries concerning interpretations of technical aspects of the Code. The Interpretations are published in a separate supplement.

Periodically certain actions of the ASME B31 Committee will be published as Cases. While these Cases do not constitute formal revisions of the Code, they may be used in specifications, or otherwise, as representing considered opinions of the Committee. The Cases are published in a separate supplement.

The user of the Code will note that metric equivalents of U.S. Customary units appear throughout this issue of the Code (except for Appendix II). The values stated in U.S. Customary units are to be regarded as standard.

ASME is the registered trademark of The American Society of Mechanical Engineers.

This code or standard was developed under procedures accredited as meeting the criteria for American National Standards. The Standards Committee that approved the code or standard was balanced to assure that individuals from competent and concerned interests have had an opportunity to participate. The proposed code or standard was made available for public review and comment which provides an opportunity for additional public input from industry, academia, regulatory agencies, and the public-at-large.

ASME does not "approve," "rate," or "endorse" any item, construction, proprietary device, or activity.

ASME does not take any position with respect to the validity of any patent rights asserted in connection with any items mentioned in this document, and does not undertake to insure anyone utilizing a standard against liability for infringement of any applicable Letters Patent, nor assume any such liability. Users of a code or standard are expressly advised that determination of the validity of any such patent rights, and the risk of infringement of such rights, is entirely their own responsibility.

Participation by federal agency representative(s) or person(s) affiliated with industry is not to be interpreted as government or industry endorsement of this code or standard.

ASME accepts responsibility for only those interpretations issued in accordance with governing ASME procedures and policies which preclude the issuance of interpretations by individual volunteers.

No part of this document may be reproduced in any form,
in an electronic retrieval system or otherwise,
without the prior written permission of the publisher.

The American Society of Mechanical Engineers
Three Park Avenue, New York, NY 10016-5990

Copyright © 2004 by
THE AMERICAN SOCIETY OF MECHANICAL ENGINEERS
All rights reserved
Printed in U.S.A.

Copyright ASME International
Provided by IHS under license with ASME
No reproduction or networking permitted without license from IHS

Not for Resale

CONTENTS

Foreword		vi
Personnel		vii
Introduction		x
Edition Summary of Changes		xii
Chapter I	**Scope and Definitions**	1
100	General	1
Chapter II	**Design**	9
Part 1	**Conditions and Criteria**	9
101	Design Conditions	9
102	Design Criteria	10
Part 2	**Pressure Design of Piping Components**	15
103	Criteria for Pressure Design of Piping Components	15
104	Pressure Design of Components	15
Part 3	**Selection and Limitations of Piping Components**	28
105	Pipe	28
106	Fittings, Bends, and Intersections	29
107	Valves	29
108	Pipe Flanges, Blanks, Flange Facings, Gaskets, and Bolting	30
Part 4	**Selection and Limitations of Piping Joints**	31
110	Piping Joints	31
111	Welded Joints	31
112	Flanged Joints	32
113	Expanded or Rolled Joints	32
114	Threaded Joints	32
115	Flared, Flareless, and Compression Joints	32
116	Bell End Joints	38
117	Brazed and Soldered Joints	38
118	Sleeve Coupled and Other Proprietary Joints	38
Part 5	**Expansion, Flexibility, and Pipe Supporting Element**	39
119	Expansion and Flexibility	39
120	Loads on Pipe Supporting Elements	41
121	Design of Pipe Supporting Elements	42
Part 6	**Systems**	45
122	Design Requirements Pertaining to Specific Piping Systems	45
Chapter III	**Materials**	60
123	General Requirements	60
124	Limitations on Materials	61
125	Materials Applied to Miscellaneous Parts	62
Chatper IV	**Dimensional Requirements**	63
126	Material Specifications and Standards for Standard and Nonstandard Piping Components	63
Chapter V	**Fabrication, Assembly, and Erection**	70
127	Welding	70
128	Brazing and Soldering	78
129	Bending and Forming	79
130	Requirements for Fabricating and Attaching Pipe Supports	80
131	Welding Preheat	80

Copyright ASME International
Provided by IHS under license with ASME
No reproduction or networking permitted without license from IHS
Not for Resale

132 Postweld Heat Treatment 81
133 Stamping 87
135 Assembly 87

Chapter VI Inspection, Examination, and Testing 89
136 Inspection and Examination 89
137 Pressure Tests 93

Figures

100.1.2(A) Code Jurisdictional Limits for Piping — Forced Flow Steam Generator With No Fixed Steam and Water Line 2
100.1.2(B) Code Jurisdictional Limits for Piping — Drum-Type Boilers 3
100.1.2(C) Code Jurisdictional Limits for Piping — Spray-Type Desuperheater 4
104.2.1 Nomenclature for Pipe Bends 14
104.3.1(D) Reinforcement of Branch Connections 20
104.3.1(G) Reinforced Extruded Outlets 22
104.5.3 Types of Permanent Blanks 26
104.8.4 27
122.1.7(C) Typical Globe Valves 49
122.4 Desuperheater Schematic Arrangement 53
127.3 Butt Welding of Piping Components With Internal Misalignment 71
127.4.2 Welding End Transition — Maximum Envelope 72
127.4.4(A) Fillet Weld Size 74
127.4.4(B) Welding Details for Slip-On and Socket-Welding Flanges; Some Acceptable Types of Flange Attachment Welds 75
127.4.4(C) Minimum Welding Dimensions Required for Socket Welding Components Other Than Flanges 75
127.4.8(A) Typical Welded Branch Connection Without Additional Reinforcement 75
127.4.8(B) Typical Welded Branch Connection With Additional Reinforcement 75
127.4.8(C) Typical Welded Angular Branch Connection Without Additional Reinforcement 75
127.4.8(D) Some Acceptable Types of Welded Branch Attachment Details Showing Minimum Acceptable Welds 76
127.4.8(E) Typical Full Penetration Weld Branch Connections for NPS 3 and Smaller Half Couplings or Adapters 77
127.4.8(F) Typical Partial Penetration Weld Branch Connection for NPS 2 and Smaller Fittings 77
135.5.3 Typical Threaded Joints Using Straight Threads 88

Tables

102.3.2(C) Stress Range Reduction Factors 11
102.4.3 Longitudinal Weld Joint Efficiency Factors 13
102.4.5 14
102.4.6(B.1.1) 15
102.4.6(B.2.2) 15
104.1.2(A) Values of y 17
112 Piping Flange Bolting, Facing, and Gasket Requirements 33
114.2.1 38
121.5 Suggested Pipe Support Spacing 43
121.7.2(A) Carrying Capacities of Threaded ASTM A 36, A 575, and A 576 Hot-Rolled Carbon Steel 44
122.2 50
122.8.2(B) Minimum Wall Thickness Requirements for Toxic Fluid Piping 57
126.1 Specifications and Standards 64
127.4.2 Reinforcement of Girth and Longitudinal Butt Welds 73
129.3.2 Approximate Lower Critical Temperatures 80
132 Postweld Heat Treatment 82

Copyright ASME International
Provided by IHS under license with ASME
No reproduction or networking permitted without license from IHS
Not for Resale

132.1 Alternate Postweld Heat Treatment Requirements for Carbon and Low Alloy Steels 86
136.4 Mandatory Minimum Nondestructive Examinations for Pressure Welds or Welds to Pressure-Retaining Components 91
136.4.1 Weld Imperfections Indicated by Various Types of Examination 92

Mandatory Appendices

Appendix A Table A-1, Carbon Steel 97
Table A-2, Low and Intermediate Alloy Steel 110
Table A-3, Stainless Steels 124
Table A-4, Nickel and High Nickel Alloys 156
Table A-5, Cast Iron 164
Table A-6, Copper and Copper Alloys 166
Table A-7, Aluminum and Aluminum Alloys 170
Table A-8, Temperatures 1200°F and Above 178
Table A-9, Titanium and Titanium Alloys 184
Appendix B Table B-1, Thermal Expansion Data 189
Table B-1 (SI), Thermal Expansion Data 192
Appendix C Table C-1, Moduli of Elasticity for Ferrous Material 196
Table C-1 (SI), Moduli of Elasticity for Ferrous Material 197
Table C-2, Moduli of Elasticity for Nonferrous Material 198
Table C-2 (SI), Moduli of Elasticity for Nonferrous Material 200
Appendix D Table D-1, Flexibility and Stress Intensification Factors 202
Chart D-1, Flexibility Factor k and Stress Intensification Factor i 206
Chart D-2, Correction Factor c 207
Fig. D-1, Branch Connection Dimensions 208
Appendix F Referenced Standards 209
Appendix G Nomenclature 212
Appendix H Preparation of Technical Inquiries 218
Appendix J Quality Control Requirements for Boiler External Piping (BEP) 219

Nonmandatory Appendices

Appendix II Rules for the Design of Safety Valve Installations 221
Appendix III Rules for Nonmetallic Piping and Piping Lined With Nonmetals 241
Appendix IV Corrosion Control for ASME B31.1 Power Piping Systems 260
Appendix V Recommended Practice for Operation, Maintenance, and Modification of Power Piping Systems 264
Appendix VI Approval of New Materials 274
Appendix VII Procedures for the Design of Restrained Underground Piping 275

Index 286

Copyright ASME International
Provided by IHS under license with ASME
No reproduction or networking permitted without license from IHS
Not for Resale

FOREWORD

The general *philosophy* underlying this Power Piping Code is to parallel those provisions of Section I, Power Boilers, of the ASME Boiler and Pressure Vessel Code, as they can be applied to power piping systems. The Allowable Stress Values for power piping are generally consistent with those assigned for power boilers. This Code is more conservative than some other piping codes, reflecting the need for long service life and maximum reliability in power plant installations.

The Power Piping Code as currently written does not differentiate between the design, fabrication, and erection requirements for *critical and noncritical piping systems,* except for certain stress calculations and mandatory nondestructive tests of welds for heavy wall, high temperature applications. The *problem involved* is to try to reach agreement on how to evaluate criticality, and to avoid the inference that noncritical systems do not require competence in design, fabrication, and erection. Some day such levels of quality may be definable, so that the need for the many different piping codes will be overcome.

There are many instances where the Code serves to *warn a designer,* fabricator, or erector against possible pitfalls; but the Code is *not a handbook,* and cannot substitute for education, experience, and sound engineering judgment.

Nonmandatory Appendices are included in the Code. Each contains information on a specific subject, and is maintained current with the Code. Although written in mandatory language, these Appendices are offered for application at the user's discretion.

The Code *never intentionally puts a ceiling limit on conservatism.* A designer is free to specify more rigid requirements as he feels they may be justified. *Conversely, a designer who is capable* of a more rigorous analysis than is specified in the Code may justify a less conservative design, and still satisfy the basic intent of the Code.

The Power Piping Committee strives to keep abreast of the current technological improvements in new materials, fabrication practices, and testing techniques; and endeavors to keep the Code updated to permit the use of acceptable new developments.

Copyright ASME International
Provided by IHS under license with ASME
No reproduction or networking permitted without license from IHS
Not for Resale

ASME CODE FOR PRESSURE PIPING, B31

OFFICERS

A. D. Nance, *Chair*
L. E. Hayden *Vice Chair*
P. Stumpf, *Secretary*

COMMITTEE PERSONNEL

H. A. Ainsworth, Consultant
R. J. Appleby, Exxonmobil Development Co.
A. E. Beyer, Fluor Daniel, Inc.
K. C. Bodenhamer, Enterprise Products Co.
P. A. Bourquin, Consultant
J. S. Chin, El Paso Corp.
D. L. Coym, Parsons E&C
P. D. Flenner, Consumers Energy Co., Flenner Engineering Services
D. M. Fox, Oncor
J. W. Frey, Reliant Resources, Inc.
D. R. Frikken, Becht Engineering Co.
R. A. Grichuk, Fluor Daniel, Inc.
R. W. Haupt, Pressure Piping Engineering Associates, Inc.
L. E. Hayden, Jr., Consultant
G. A. Jolly, Vogt Valves/Flowserve
J. M. Kelly, Consultant
W. J. Koves, UOP LLC
K. K. Kyser, York International Frick
W. B. McGehee, Consultant
J. E. Meyer, Middough Consulting, Inc.
E. Michalopoulos, General Engineering and Commercial Co.
T. J. O'Grady, Veco Alaska, Inc.
R. G. Payne, Alstom Power
J. T. Powers, Parsons Energy & Chemicals
W. V. Richards, Consultant
E. H. Rinaca, Dominion/Virginia Power
M. J. Rosenfeld, Kiefner & Associates, Inc.
R. J. Silvia, Process Engineers and Constructors, Inc.
W. J. Sperko, Sperko Engineering Services, Inc.
G. W. Spohn III, Coleman Spohn Corp.
A. L. Watkins, The Perry Nuclear Power Plant
R. B. West, State of Iowa

B31.1 POWER PIPING SECTION COMMITTEE

M. L. Nayyar, *Chair,* Bechtel Power Corp.
P. D. Flenner, *Vice Chair,* Flenner Engineering Services
J. N. Shih, *Secretary,* The American Society of Mechanical Engineers
H. A. Ainsworth, Consultant
P. S. Barham, City Public Service
P. T. Cerve, Exelon Nuclear
R. D. Delpizzo, ABS Americas
G. J. Delude, Tre Engineering
A. S. Drake, Calvert Cliffs Nuclear Power Plant, Inc.
J. W. Frey, Reliant Energy
E. C. Goodling, Jr., Parsons Energy & Chemicals
R. W. Haupt, Pressure Piping Engineering Assoc, Inc.
C. L. Henley, Black & Veatch
B. P. Holbrook, Babcock Power, Inc.
D. J. Leininger, Parsons Engineering & Chemical Group, Inc.
W. M. Lundy, U.S. Coast Guard, Washington
W. J. Mauro, American Electric Power
D. C. Moore, Southern Co Services, Inc.
A. D. Nance, A D Nance Associates, Inc.
R. D. Patel, GE Nuclear Energy
R. G. Payne, Alstom Power, Inc.
D. W. Rahoi, CCM 2000
K. I. Rapkin, FPI
R. K. Reamey, Entergy Nelson Station
E. H. Rinaca, Dominion/ Virginia Power
R. D. Scheuler, Jr., National Board of Boiler and Pressure Vessels Inspectors
J. J. Sekely, Wayne Crouse, Inc.
H. R. Simpson, AEP ProServe NE
S. K. Sinha, Lucius Pitkin, Inc.
E. F. Summers, Jr., Babcock & Wilcox Construction Co.
K. A. Vilminot, Black & Veatch
A. L. Watkins, First Energy Corporation
R. B. West, State of Iowa, Division of Labor Services

B31.1 ADDITIONAL ACTIVITIES SUBGROUP

P. W. Bird, Siemens Power Generation
W. R. Broz, McGowan Broz Engineers, Inc.
J. H. Casiglia, Consultant
D. D. Christian, Victaulic Co of America
M. J. Cohn, Aptech Engineering Services, Inc.
D. H. Creates, Ontario Power Generation, Inc.
R. P. Deubler, BGA, LLC
S. J. Findlan, EPRI
E. F. Gerwin, Consultant
T. E. Hansen, American Electric Power
J. Kaliyadan, Nuclear Management Co.
R. J. Kennedy, Detroit Edition Co.
S. P. Licud, PSE&G
D. D. Pierce, Puget Sound Naval Shipyard
J. P. Scott, Dominion
R. C. Sommerfeld, Consultant

Copyright ASME International
Provided by IHS under license with ASME
No reproduction or networking permitted without license from IHS
Not for Resale

B31 ADMINISTRATIVE COMMITTEE

A. D. Nance, *Chair,* AD Nance Assoc., Inc.
L. E. Hayden, Jr., *Vice Chair,* Consultant
P. D. Stumpf, *Secretary,* The American Society of Mechanical Engineers
K. C. Bodenhamer, Enterprise Products Co.
P. D. Flenner, Flenner Engineering Services
D. M. Fox, Oncor
D. R. Frikken, Becht Engineering Co.
R. W. Haupt, *Ex-Officio Member,* Pressure Piping Engineering Assoc., Inc.
R. R. Hoffmann, Federal Energy Reg. Commission
B. P. Holbrook, Babcock Power, Inc.
W. B. McGehee, *Ex-Officio Member,* Consultant
E. Michalopoulos, General Engineering and Commercial Co.
R. B. West, State of Iowa

B31 FABRICATION AND EXAMINATION COMMITTEE

P. D. Stumpf, *Secretary,* The American Society of Mechanical Engineers
W. G. Scruggs, Dupont
R. I. Seals, Consultant
R. J. Silvia, Process Engineering & Constructors, Inc.
W. J. Sperko, Sperko Engineering Services, Inc.

B31 MATERIALS TECHNICAL COMMITTEE

M. L. Nayyar, *Chair,* Bechtel Power Corp.
N. Lobo, *Secretary,* The American Society of Mechanical Engineers
P. S. Barham, City Public Services
M. H. Barnes, Sebesta Blomberg & Associates
J. A. Cox, Consultant
R. P. Deubler, BGA LLC
R. A. Grichuk, Fluor Daniel, Inc.
C. L. Henley, Black and Veatch
R. A. Mueller, Dynegy Midstream Services
D. W. Rahoi, CCM 2000
W. V. Richards, Consultant
D. Rogell, Solutia, Inc.
R. A. Schmidt, Trinity-Ladish
J. L. Smith, Foster Wheeler
R. J. Young, Consultant

B31 MECHANICAL DESIGN TECHNICAL COMMITTEE

R. W. Haupt, *Chair,* Pressure Piping Engineering Assoc., Inc.
S. J. Rossi, *Secretary,* The American Society of Mechanical Engineers
G. A. Antaki, Washington Group
C. Becht IV, Becht Engineering Co.
J. P. Breen, John J. McMullen Assoc.
J. P. Ellenberger, Consultant
D. J. Fetzner, BPX Alaska, Inc.
J. A. Graziano, Tennessee Valley Authority
J. D. Hart, SSD, Inc.
B. P. Holbrook, Babcock Power, Inc.
W. J. Koves, UOP LLC
G. Mayers, Anteon Corp.
T. Q. McCawley, TQM Engineering, PC
E. Michalopoulos, General Engineering and Commercial Co.
J. C. Minichiello, Framatome ANP
T. J. O'Grady II, Veco Alaska, Inc.
A. W. Paulin, Paulin Research Group
R. A. Robleto, Robert A. Robleto
M. J. Rosenfeld, Kiefner & Associates, Inc.
G. Stevick, Berkeley Engineering & Research, Inc.
E. A. Wais, Wais and Associates, Inc.
G. E. Woods, Technip USA
E. C. Rodabaugh, *Honorary Member,* Consultant

B31 CONFERENCE GROUP

T. A. Bell, Bonneville Power Admin.
G. Bynog, State of Texas, TDLS-Boiler Division
R. A. Coomes, State of Kentucky, Dept. of Housing/Boiler Section
D. H. Hanrath, Consultant
C. J. Harvey, Alabama Public Service Commission
D. T. Jagger, Ohio Department of Commerce
M. Kotb, Regie du Batiment du Quebec
K. T. Lau, Alberta Boilers Safety Association
R. G. Marini, New Hampshire Public Utilities Commission
I. W. Mault, Manitoba Department of Labour
A. W. Meiring, Fire and Building Boiler and Pressure Vessel Division
R. F. Mullaney, Boiler and Pressure Vessel Safety Branch
P. Sher, State of Connecticut
M. E. Skarda, Department of Labor
D. A. Starr, Nebraska Department of Labor
D. J. Stursma, Iowa Utilities Board
R. P. Sullivan, The National Board of Boiler and Pressure Vessel Inspectors
J. E. Troppman, Division of Labor/State of Colorado Boiler Inspections
C. H. Walters, National Board of Boiler and Pressure Vessel Inspectors
W. A. West, Lighthouse Assistance, Inc.
T. F. Wickham, Rhode Island Department of Labor

Copyright ASME International
Provided by IHS under license with ASME
No reproduction or networking permitted without license from IHS
Not for Resale

B31 NATIONAL INTEREST REVIEW GROUP

American Society of Heating, Refrigeration and Air Conditioning Engineers — H. R. Kornblum
Chemical Manufacturers Association — D. R. Frikken
Copper Development Association — A. Cohen
Ductile Iron Pipe Research Association — T. F. Stroud
Edison Electric Institute — R. L. Williams
International District Heating Association — G. M. Von Bargen
Manufacturers Standardization Society of the Valve and Fittings Industry — R. A. Schmidt
National Association of Plumbing-Heating-Cooling Contractors — R. E. White
National Certified Pipe Welding Bureau — D. Nikpourfard
National Fire Protection Association — T. C. Lemoff
Valve Manufacturers Association — R. A. Handschumacher

--`,,```,,,,````-`-`,,`,,`,`,,`---
Copyright ASME International
Provided by IHS under license with ASME
No reproduction or networking permitted without license from IHS
Not for Resale

INTRODUCTION

The ASME B31 Code for Pressure Piping consists of a number of individually published Sections, each an American National Standard, under the direction of ASME Committee B31, Code for Pressure Piping.

Rules for each Section have been developed considering the need for application of specific requirements for various types of pressure piping. Applications considered for each Code Section include:

B31.1 Power Piping: piping typically found in electric power generating stations, in industrial and institutional plants, geothermal heating systems, and central and district heating and cooling systems;

B31.3 Process Piping: piping typically found in petroleum refineries, chemical, pharmaceutical, textile, paper, semiconductor, and cryogenic plants, and related processing plants and terminals;

B31.4 Pipeline Transportation Systems for Liquid Hydrocarbons and Other Liquids: piping transporting products which are predominately liquid between plants and terminals and within terminals, pumping, regulating, and metering stations;

B31.5 Refrigeration Piping: piping for refrigerants and secondary coolants;

B31.8 Gas Transportation and Distribution Piping Systems: piping transporting products which are predominately gas between sources and terminals, including compressor, regulating, and metering stations; and gas gathering pipelines;

B31.9 Building Services Piping: piping typically found in industrial, institutional, commercial, and public buildings, and in multi-unit residences, which does not require the range of sizes, pressures, and temperatures covered in B31.1;

B31.11 Slurry Transportation Piping Systems: piping transporting aqueous slurries between plants and terminals and within terminals, pumping, and regulating stations.

This is the B31.1 Power Piping Code Section. Hereafter, in this Introduction and in the text of this Code Section B31.1, where the word *Code* is used without specific identification, it means this Code Section.

It is the owner's responsibility to select the Code Section which most nearly applies to a proposed piping installation. Factors to be considered by the owner include: limitations of the Code Section; jurisdictional requirements; and the applicability of other codes and standards. All applicable requirements of the selected Code Section shall be met. For some installations, more than one Code Section may apply to different parts of the installation. The owner is also responsible for imposing requirements supplementary to those of the selected Code Section, if necessary, to assure safe piping for the proposed installation.

Certain piping within a facility may be subject to other codes and standards, including but not limited to:

ASME Boiler and Pressure Vessel Code, Section III: nuclear power piping;

ANSI Z223.1 National Fuel Gas Code: piping for fuel gas from the point of delivery to the connection of each fuel utilization device;

NFPA Fire Protection Standards: fire protection systems using water, carbon dioxide, halon, foam, dry chemical, and wet chemicals;

NFPA 99 Health Care Facilities: medical and laboratory gas systems;

NFPA 8503 Standard for Pulverized Fuel Systems: piping for pulverized coal from the coal mills to the burners;

Building and plumbing codes, as applicable, for potable hot and cold water, and for sewer and drain systems.

The Code sets forth engineering requirements deemed necessary for safe design and construction of pressure piping. While safety is the basic consideration, this factor alone will not necessarily govern the final specifications for any piping system. The designer is cautioned that the Code is not a design handbook; it does not do away with the need for the designer or for competent engineering judgment.

To the greatest possible extent, Code requirements for design are stated in terms of basic design principles and formulas. These are supplemented as necessary with specific requirements to assure uniform application of principles and to guide selection and application of piping elements. The Code prohibits designs and practices known to be unsafe and contains warnings where caution, but not prohibition, is warranted.

The specific design requirements of the Code usually revolve around a simplified engineering approach to a subject. It is intended that a designer capable of applying more complete and rigorous analysis to special or unusual problems shall have latitude in the development of such designs and the evaluation of complex or combined stresses. In such cases the designer is responsible for demonstrating the validity of his approach.

This Code Section includes:

(a) references to acceptable material specifications and component standards, including dimensional requirements and pressure-temperature ratings;

(b) requirements for design of components and assemblies, including pipe supports;

Copyright ASME International
Provided by IHS under license with ASME
No reproduction or networking permitted without license from IHS
Not for Resale

(c) requirements and data for evaluation and limitation of stresses, reactions, and movements associated with pressure, temperature changes, and other forces;

(d) guidance and limitations on the selection and application of materials, components, and joining methods;

(e) requirements for the fabrication, assembly, and erection of piping; and

(f) requirements for examination, inspection, and testing of piping.

It is intended that this Edition of Code Section B31.1 and any subsequent Addenda not be retroactive. Unless agreement is specifically made between contracting parties to use another issue, or the regulatory body having jurisdiction imposes the use of another issue, the latest Edition and Addenda issued at least 6 months prior to the original contract date for the first phase of activity covering a piping system or systems shall be the governing document for all design, materials, fabrication, erection, examination, and testing for the piping until the completion of the work and initial operation.

Users of this Code are cautioned against making use of revisions without assurance that they are acceptable to the proper authorities in the jurisdiction where the piping is to be installed.

Code users will note that clauses in the Code are not necessarily numbered consecutively. Such discontinuities result from following a common outline, insofar as practicable, for all Code Sections. In this way, corresponding material is correspondingly numbered in most Code Sections, thus facilitating reference by those who have occasion to use more than one Section.

The Code is under the direction of ASME Committee B31, Code for Pressure Piping, which is organized and operates under procedures of The American Society of Mechanical Engineers which have been accredited by the American National Standards Institute. The Committee is a continuing one, and keeps all Code Sections current with new developments in materials, construction, and industrial practice. Addenda are issued periodically. New editions are published at intervals of three to five years.

When no Section of the ASME Code for Pressure Piping, specifically covers a piping system, at his discretion the user may select any Section determined to be generally applicable. However, it is cautioned that supplementary requirements to the Section chosen may be necessary to provide for a safe piping system for the intended application. Technical limitations of the various Sections, legal requirements, and possible applicability of other codes or standards are some of the factors to be considered by the user in determining the applicability of any Section of this Code.

The Committee has established an orderly procedure to consider requests for interpretation and revision of Code requirements. To receive consideration, inquiries must be in writing and must give full particulars (see Mandatory Appendix H covering preparation of technical inquiries). The Committee will not respond to inquiries requesting assignment of a Code Section to a piping installation.

The approved reply to an inquiry will be sent directly to the inquirer. In addition, the question and reply will be published as part of an Interpretation Supplement issued to the applicable Code Section.

A Case is the prescribed form of reply to an inquiry when study indicates that the Code wording needs clarification or when the reply modifies existing requirements of the Code or grants permission to use new materials or alternative constructions. Proposed Cases are published in *Mechanical Engineering* for public review. In addition, the Case will be published as part of a Case Supplement issued to the applicable Code Section.

A case is normally issued for a limited period after which it may be renewed, incorporated in the Code, or allowed to expire if there is no indication of further need for the requirements covered by the Case. However, the provisions of a Case may be used after its expiration or withdrawal, provided the Case was effective on the original contract date or was adopted before completion of the work; and the contracting parties agree to its use.

Materials are listed in the Stress Tables only when sufficient usage in piping within the scope of the Code has been shown. Materials may be covered by a Case. Requests for listing shall include evidence of satisfactory usage and specific data to permit establishment of allowable stresses, maximum and minimum temperature limits, and other restrictions. Additional criteria can be found in the guidelines for addition of new materials in the ASME Boiler and Pressure Vessel Code, Section II and Section VIII, Division 1, Appendix B. (To develop usage and gain experience, unlisted materials may be used in accordance with para. 123.1.)

Requests for interpretation and suggestions for revision should be addressed to the Secretary, ASME B31 Committee, Three Park Avenue, New York, NY 10016-5990.

--`,,```,,,,````-`-`,,`,,`,`,,`---

Copyright ASME International
Provided by IHS under license with ASME
No reproduction or networking permitted without license from IHS

Not for Resale

ASME B31.1-2004
SUMMARY OF CHANGES

Changes given below are identified on the pages by a margin note, **(04),** placed next to the affected area.

Page	*Location*	*Change*
29	106.1(C)	Reference to ASTM specification revised
61	124.2(D)	Revised in its entirety
70	127.2	Revised in its entirety
82, 83	Table 132	Holding Temperature column revised
121, 122	Table A-2	(1) Note (10) revised (2) Note (14) corrected by errata
126, 127	Table A-3	New row added under Seamless Pipe and Tube, Austenitic
165	Table A-5	Entries in −20 to 400 column revised
209, 210	Mandatory Appendix F	(1) ASTM Standard Test Methods revised (2) ASNT Specifications revised
285	VII-7.0[11]	Reference added

SPECIAL NOTE: The Interpretations to ASME B31.1 issued between January 1, 2003, and June 30, 2003 follow the last page of this Edition as a separate supplement, Interpretations No. 39. After the Interpretations, a separate supplement, Cases No. 29, follows.

Copyright ASME International
Provided by IHS under license with ASME
No reproduction or networking permitted without license from IHS
Not for Resale

POWER PIPING

Chapter I
Scope and Definitions

100 GENERAL

This Power Piping Code is one of several Sections of the American Society of Mechanical Engineers Code for Pressure Piping, B31. This Section is published as a separate document for convenience.

Standards and specifications specifically incorporated by reference into this Code are shown in Table 126.1. It is not considered practical to refer to a dated edition of each of the standards and specifications in this Code. Instead, the dated edition references are included in an Addenda which will be revised yearly.

100.1 Scope

Rules for this Code Section have been developed considering the needs for applications which include piping typically found in electric power generating stations, in industrial and institutional plants, geothermal heating systems, and central and district heating and cooling systems.

100.1.1 This Code prescribes requirements for the design, materials, fabrication, erection, test, and inspection of piping systems.

Piping as used in this Code includes pipe, flanges, bolting, gaskets, valves, relief devices, fittings, and the pressure containing portions of other piping components, whether manufactured in accordance with Standards listed in Table 126.1 or specially designed. It also includes hangers and supports and other equipment items necessary to prevent overstressing the pressure containing components.

Rules governing piping for miscellaneous appurtenances, such as water columns, remote water level indicators, pressure gages, gage glasses etc., are included within the scope of this Code, but the requirements for boiler appurtenances shall be in accordance with Section I of the ASME Boiler and Pressure Vessel Code, PG-60.

The users of this Code are advised that in some areas legislation may establish governmental jurisdiction over the subject matter covered by this Code. However, any such legal requirement shall not relieve the owner of his inspection responsibilities specified in para. 136.1.

100.1.2 Power piping systems as covered by this Code apply to all piping and their component parts except as excluded in para. 100.1.3. They include but are not limited to steam, water, oil, gas, and air services.

This Code covers boiler external piping as defined below for power boilers and high temperature, high pressure water boilers in which: steam or vapor is generated at a pressure of more than 15 psig [100 kPa (gage)]; and high temperature water is generated at pressures exceeding 160 psig [1103 kPa (gage)] and/or temperatures exceeding 250°F (120°C).

Boiler external piping shall be considered as that piping which begins where the boiler proper terminates at

(A) the first circumferential joint for welding end connections; or

(B) the face of the first flange in bolted flanged connections; or

(C) the first threaded joint in that type of connection; and which extends up to and including the valve or valves required by para. 122.1.

The terminal points themselves are considered part of the boiler external piping. The terminal points and piping external to power boilers are illustrated by Figs. 100.1.2(A), 100.1.2(B), and 100.1.2(C).

Piping between the terminal points and the valve or valves required by para. 122.1 shall be provided with Data Reports, inspection, and stamping as required by Section I of the ASME Boiler and Pressure Vessel Code. All welding and brazing of this piping shall be performed by manufacturers or contractors authorized to use the appropriate symbol shown in Figs. PG-105.1 through PG-105.3 of Section I of the ASME Boiler and Pressure Vessel Code. The installation of boiler external piping by mechanical means may be performed by an organization not holding a Code symbol stamp. However, the holder of a valid S, A, or PP Certificate of Authorization shall be responsible for the documentation and hydrostatic test, regardless of the method of assembly. The quality control system requirements of Section I of the ASME Boiler and Pressure Vessel Code shall apply. These requirements are shown in Appendix J of this Code.

Copyright ASME International
Provided by IHS under license with ASME
No reproduction or networking permitted without license from IHS
Not for Resale

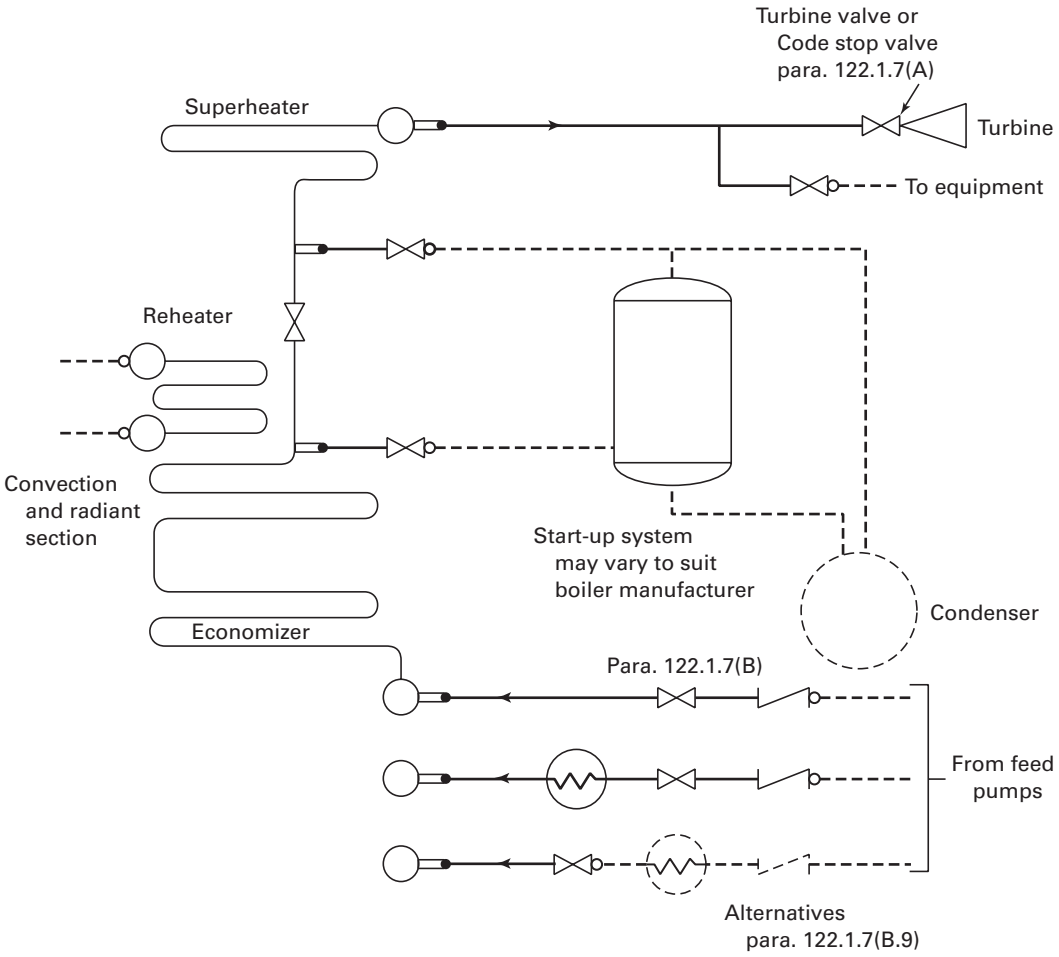

Administrative Jurisdiction and Technical Responsibility

——— Boiler Proper — The ASME Boiler and Pressure Vessel Code (ASME BPVC) has total administrative jurisdiction and technical responsibility. Refer to ASME BPVC Section I Preamble.

●——— Boiler External Piping and Joint (BEP) — The ASME BPVC has total administrative jurisdiction (mandatory certification by Code Symbol stamping, ASME Data Forms, and Authorized Inspection) of BEP. The ASME Section Committee B31.1 has been assigned technical responsibility. Refer to ASME BPVC Section I Preamble, fifth, sixth, and seventh paragraphs and ASME B31.1 Scope, para. 100.1.2(A). Applicable ASME B31.1 Editions and Addenda are referenced in ASME BPVC Section I, PG-58.3.

o- - - - - Nonboiler External Piping and Joint (NBEP) — The ASME Code Committee for Pressure Piping, B31, has total administrative and technical responsibility.

Fig. 100.1.2(A) Code Jurisdictional Limits for Piping — Forced Flow Steam Generator With No Fixed Steam and Water Line

The valve or valves required by para. 122.1 are part of the boiler external piping, but do not require ASME Boiler and Pressure Vessel Code, Section I inspection and stamping except for safety, safety relief, and relief valves, see para. 107.8.2. Refer to PG-11.

Pipe connections meeting all other requirements of this Code but not exceeding NPS ½ may be welded to pipe or boiler headers without inspection and stamping required by Section I of the ASME Boiler and Pressure Vessel Code.

Nonboiler external piping includes all the piping covered by this Code except for that portion defined above as boiler external piping.

100.1.3 This Code does not apply to the following:
(A) economizers, heaters, pressure vessels, and

Copyright ASME International
Provided by IHS under license with ASME
No reproduction or networking permitted without license from IHS
Not for Resale

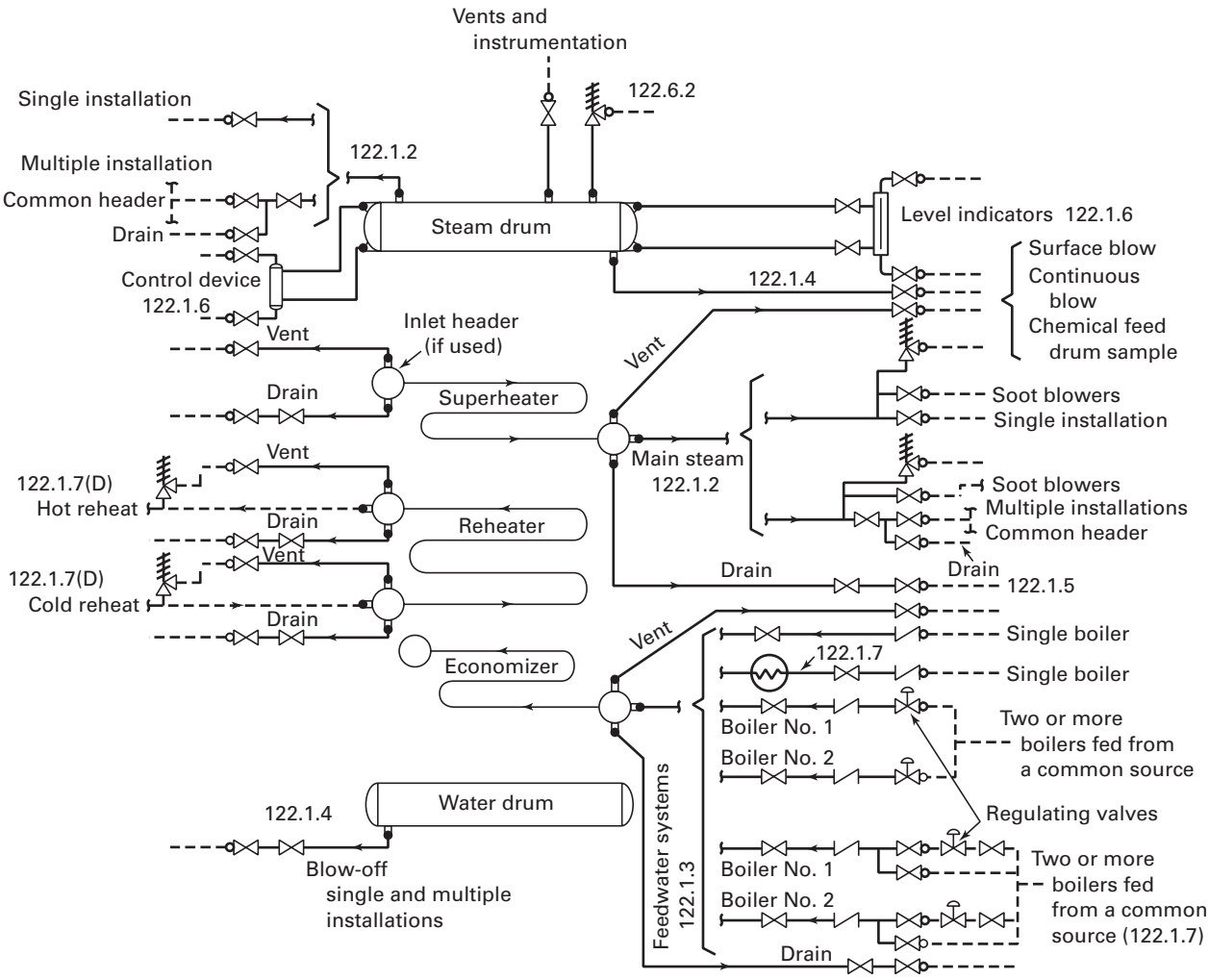

Administrative Jurisdiction and Technical Responsibility

——— Boiler Proper — The ASME Boiler and Pressure Vessel Code (ASME BPVC) has total administrative jurisdiction and technical responsibility. Refer to ASME BPVC Section I Preamble.

●——— Boiler External Piping and Joint (BEP) — The ASME BPVC has total administrative jurisdiction (mandatory certification by Code Symbol stamping, ASME Data Forms, and Authorized Inspection) of BEP. The ASME Section Committee B31.1 has been assigned technical responsibility. Refer to ASME BPVC Section I Preamble and ASME B31.1 Scope, para. 100.1.2(A). Applicable ASME B31.1 Editions and Addenda are referenced in ASME BPVC Section I, PG-58.3.

○- - - - - Nonboiler External Piping and Joint (NBEP) — The ASME Code Committee for Pressure Piping, B31, has total administrative and technical responsibility.

Fig. 100.1.2(B) Code Jurisdictional Limits for Piping — Drum-Type Boilers

Copyright ASME International
Provided by IHS under license with ASME
No reproduction or networking permitted without license from IHS
Not for Resale

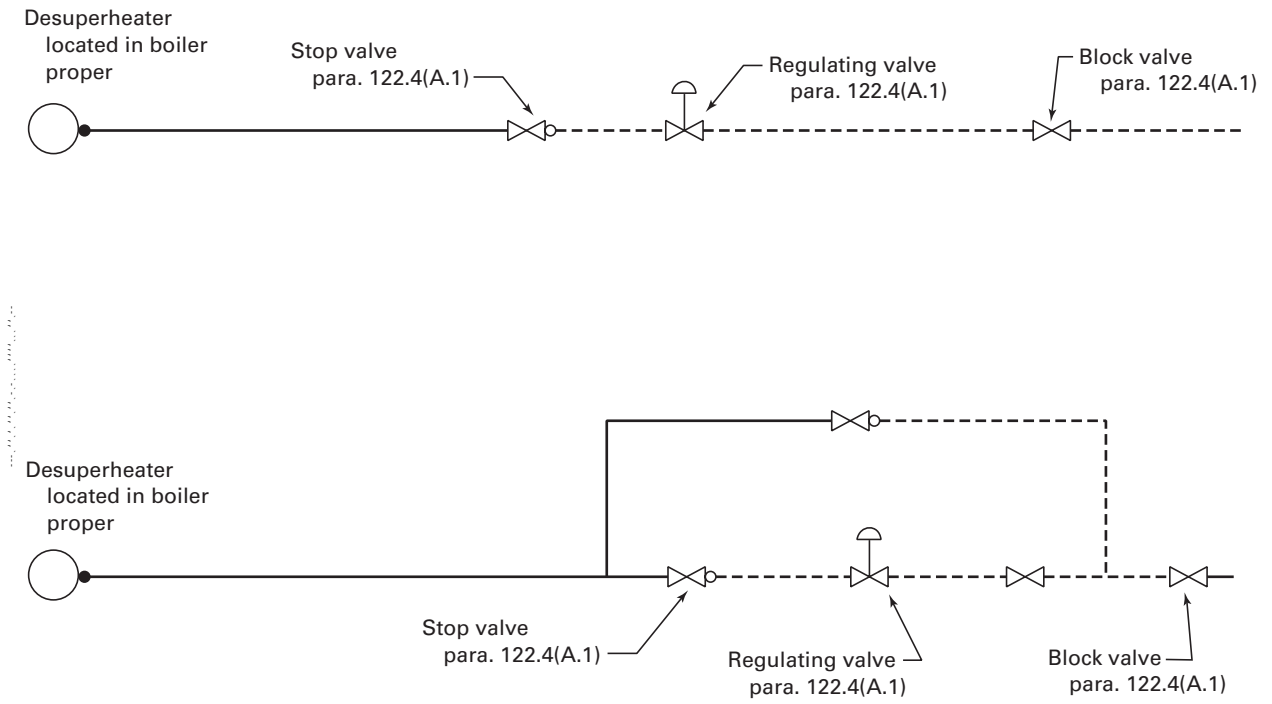

Administrative Jurisdiction and Technical Responsibility

Boiler Proper — The ASME Boiler and Pressure Vessel Code (ASME BPVC) has total administrative jurisdiction and technical responsibility. Refer to ASME BPVC Section 1 Preamble.

Boiler External Piping and Joint (BEP) — The ASME BPVC has total administrative jurisdiction (mandatory certification by Code Symbol stamping, ASME Data Forms, and Authorized Inspection) of BEP. The ASME Section Committee B31.1 has been assigned technical responsibility. Refer to ASME BPVC Section I Preamble and ASME B31.1 Scope, para. 100.1.2(A). Applicable ASME B31.1 Editions and Addenda are referenced in ASME BPVC Section I, PG-58.3.

Nonboiler External Piping and Joint (NBEP) — The ASME Code Committee for Pressure Piping, B31, has total administrative and technical responsibility.

Fig. 100.1.2(C) Code Jurisdictional Limits for Piping — Spray-Type Desuperheater

components covered by Sections of the ASME Boiler and Pressure Vessel Code

(B) building heating and distribution steam and condensate piping designed for 15 psig [100 kPa(gage)] or less, or hot water heating systems designed for 30 psig [200 kPa (gage)] or less

(C) piping for hydraulic or pneumatic tools and their components downstream of the first block or stop valve off the system distribution header

(D) piping for marine or other installations under Federal control

(E) towers, building frames, tanks, mechanical equipment, instruments, and foundations

100.2 Definitions

Some commonly used terms relating to piping are defined below. Terms related to welding generally agree with AWS A3.0. Some welding terms are defined with specified reference to piping. For welding terms used in this Code, but not shown here, definitions of AWS A3.0 apply.

anchor: a rigid restraint providing substantially full fixation, permitting neither translatory nor rotational displacement of the pipe.

annealing: see *heat treatments.*

arc welding: a group of welding processes wherein coalescence is produced by heating with an electric arc or arcs, with or without the application of pressure and with or without the use of filler metal.

assembly: the joining together of two or more piping components by bolting, welding, caulking, brazing, soldering, cementing, or threading into their installed location as specified by the engineering design.

Copyright ASME International
Provided by IHS under license with ASME
No reproduction or networking permitted without license from IHS
Not for Resale

automatic welding: welding with equipment which performs the entire welding operation without constant observation and adjustment of the controls by an operator. The equipment may or may not perform the loading and unloading of the work.

backing ring: backing in the form of a ring that can be used in the welding of piping.

ball joint: a component which permits universal rotational movement in a piping system.

base metal: the metal to be welded, brazed, soldered, or cut.

branch connection: the attachment of a branch pipe to the run of a main pipe with or without the use of fittings.

braze welding: a method of welding whereby a groove, fillet, plug, or slot weld is made using a nonferrous filler metal having a melting point below that of the base metals, but above 800°F (425°C). The filler metal is not distributed in the joint by capillary action. (Bronze welding, formerly used, is a misnomer for this term.)

brazing: a metal joining process wherein coalescence is produced by use of a nonferrous filler metal having a melting point above 800°F (425°C) but lower than that of the base metals joined. The filler metal is distributed between the closely fitted surfaces of the joint by capillary action.

butt joint: a joint between two members lying approximately in the same plane.

component: component as used in this Code is defined as consisting of but not limited to items such as pipe, piping subassemblies, parts, valves, strainers, relief devices, fittings, etc.

standard component: a component manufactured in accordance with one or more of the standards listed in Table 126.1.

specially designed component: a component designed in accordance with para. 104.7.2.

defect: a flaw (imperfection or unintentional discontinuity) of such size, shape, orientation, location, or properties as to be rejectable.

discontinuity: a lack of continuity or cohesion; an interruption in the normal physical structure of material or a product.

employer: the owner, manufacturer, fabricator, contractor, assembler, or installer responsible for the welding, brazing, and NDE performed by his organization including procedure and performance qualifications.

engineering design: the detailed design developed from process requirements and conforming to Code requirements, including all necessary drawings and specifications, governing a piping installation.

equipment connection: an integral part of such equipment as pressure vessels, heat exchangers, pumps, etc., designed for attachment of pipe or piping components.

erection: the complete installation of a piping system, including any field assembly, fabrication, testing, and inspection of the system.

examination: denotes the procedures for all nondestructive examination. Refer to para. 136.1 and the definition for visual examination.

expansion joint: a flexible piping component which absorbs thermal and/or terminal movement.

fabrication: primarily, the joining of piping components into integral pieces ready for assembly. It includes bending, forming, threading, welding, or other operations upon these components, if not part of assembly. It may be done in a shop or in the field.

face of weld: the exposed surface of a weld on the side from which the welding was done.

filler metal: metal to be added in welding, soldering, brazing, or braze welding.

fillet weld: a weld of approximately triangular cross section joining two surfaces approximately at right angles to each other in a lap joint, tee joint, corner joint, or socket weld.

fire hazard: situation in which a material of more than average combustibility or explosibility exists in the presence of a potential ignition source.

flaw: an imperfection or unintentional discontinuity which is detectable by a nondestructive examination.

full fillet weld: a fillet weld whose size is equal to the thickness of the thinner member joined.

fusion: the melting together of filler metal and base metal, or of base metal only, which results in coalescence.

gas welding: a group of welding processes wherein coalescence is produced by heating with a gas flame or flames, with or without the application of pressure, and with or without the use of filler metal.

groove weld: a weld made in the groove between two members to be joined.

heat affected zone: that portion of the base metal which has not been melted, but whose mechanical properties or microstructure have been altered by the heat of welding or cutting.

heat treatments

annealing, full: heating a metal or alloy to a temperature above the critical temperature range and holding above the range for a proper period of time, followed by cooling to below that range. (A softening treatment is often carried out just below the critical range which is referred to as a subcritical anneal.)

normalizing: a process in which a ferrous metal is heated to a suitable temperature above the transformation range and is subsequently cooled in still air at room temperature.

Copyright ASME International
Provided by IHS under license with ASME
No reproduction or networking permitted without license from IHS Not for Resale

postweld heat treatment: any heat treatment subsequent to welding.

preheating: the application of heat to a base metal immediately prior to a welding or cutting operation.

stress-relieving: uniform heating of a structure or portion thereof to a sufficient temperature to relieve the major portion of the residual stresses, followed by uniform cooling.

imperfection: a condition of being imperfect; a departure of a quality characteristic from its intended condition.

indication: the response or evidence from the application of a nondestructive examination.

inert gas metal arc welding: an arc welding process wherein coalescence is produced by heating with an electric arc between a metal electrode and the work. Shielding is obtained from an inert gas, such as helium or argon. Pressure may or may not be used and filler metal may or may not be used.

inspection: denotes verifying the performance of examination and tests by an Inspector.

joint design: the joint geometry together with the required dimensions of the welded joint.

joint penetration: the minimum depth of a groove weld extends from its face into a joint, exclusive of reinforcement.

low energy capacitor discharge welding: a resistance welding process wherein coalescence is produced by the rapid discharge of stored electric energy from a low voltage electrostatic storage system.

manual welding: welding wherein the entire welding operation is performed and controlled by hand.

maximum allowable stress: the maximum stress value that may be used in the design formulas for a given material and design temperature.

maximum allowable working pressure (MAWP): the pressure at the coincident temperature to which a boiler or pressure vessel can be subjected without exceeding the maximum allowable stress of the material or pressure-temperature rating of the equipment. For the purposes of this Code, the term MAWP is as defined in the ASME Boiler and Pressure Vessel Code, Sections I and VIII.

may: may is used to denote permission, neither a requirement nor a recommendation.

mechanical joint: a joint for the purpose of mechanical strength or leak resistance, or both, where the mechanical strength is developed by threaded, grooved, rolled, flared, or flanged pipe ends, or by bolts, pins, and compounds, gaskets, rolled ends, caulking, or machined and mated surfaces. These joints have particular application where ease of disassembly is desired.

miter: two or more straight sections of pipe matched and joined on a line bisecting the angle of junction so as to produce a change in direction.

nominal thickness: the thickness given in the product material specification or standard to which manufacturing tolerances are applied.

normalizing: see *heat treatments.*

oxygen cutting: a group of cutting processes wherein the severing of metals is effected by means of the chemical reaction of oxygen with the base metal at elevated temperatures. In the case of oxidation-resistant metals, the reaction is facilitated by use of a flux.

oxygen gouging: an application of oxygen cutting wherein a chamfer or groove is formed.

peening: the mechanical working of metals by means of hammer blows.

pipe and tube: the fundamental difference between pipe and tube is the dimensional standard to which each is manufactured.

A pipe is a tube with a round cross section conforming to the dimensional requirements for nominal pipe size as tabulated in ANSI B36.10, Tables 2 and 4, and ANSI B36.19, Table 1. For special pipe having a diameter not listed in these Tables, and also for round tube, the nominal diameter corresponds with the outside diameter.

A tube is a hollow product of round or any other cross section having a continuous periphery. Round tube size may be specified with respect to any two, but not all three, of the following: outside diameter, inside diameter, wall thickness; types K, L, and M copper tube may also be specified by nominal size and type only. Dimensions and permissible variations (tolerances) are specified in the appropriate ASTM or ASME standard specifications.

Types of pipe, according to the method of manufacture, are defined as follows:

(A) electric resistance welded pipe: pipe produced in individual lengths or in continuous lengths from coiled skelp and subsequently cut into individual lengths, having a longitudinal butt joint wherein coalescence is produced by the heat obtained from resistance of the pipe to the flow of electric current in a circuit of which the pipe is a part, and by the application of pressure.

(B) furnace butt welded pipe

(B.1) furnace butt welded pipe, bell welded: pipe produced in individual lengths from cut length skelp, having its longitudinal butt joint forge welded by the mechanical pressure developed in drawing the furnace heated skelp through a cone shaped die (commonly known as a "welding bell") which serves as a combined forming and welding die.

(B.2) furnace butt welded pipe, continuous welded: pipe produced in continuous lengths from coiled skelp and subsequently cut into individual lengths, having its longitudinal butt joint forge welded by the mechanical pressure developed in rolling the hot formed skelp through a set of round pass welding rolls.

Copyright ASME International
Provided by IHS under license with ASME
No reproduction or networking permitted without license from IHS
Not for Resale

(C) electric fusion welded pipe: pipe having a longitudinal butt joint wherein coalescence is produced in the preformed tube by manual or automatic electric arc welding. The weld may be single (welded from one side), or double (welded from inside and outside) and may be made with or without the use of filler metal. Spiral welded pipe is also made by the electric fusion welded process with either a butt joint, a lap joint, or a lock seam joint.

(D) electric flash welded pipe: pipe having a longitudinal butt joint wherein coalescence is produced, simultaneously over the entire area of abutting surfaces, by the heat obtained from resistance to the flow of electric current between the two surfaces, and by the application of pressure after heating is substantially completed. Flashing and upsetting are accompanied by expulsion of metal from the joint.

(E) double submerged arc welded pipe: pipe having a longitudinal butt joint produced by the submerged arc process, with at least two passes, one of which is on the inside of the pipe.

(F) seamless pipe: pipe produced by one or more of the following processes:

(F.1) rolled pipe: pipe produced from a forged billet which is pierced by a conical mandrel between two diametrically opposed rolls. The pierced shell is subsequently rolled and expanded over mandrels of increasingly larger diameter. Where closer dimensional tolerances are desired, the rolled pipe is cold or hot drawn through dies, and machined.

One variation of this process produces the hollow shell by extrusion of the forged billet over a mandrel in a vertical, hydraulic piercing press.

(F.2) forged and bored pipe: pipe produced by boring or trepanning of a forged billet.

(F.3) extruded pipe: pipe produced from hollow or solid round forgings, usually in a hydraulic extrusion press. In this process the forging is contained in a cylindrical die. Initially a punch at the end of the extrusion plunger pierces the forging. The extrusion plunger then forces the contained billet between the cylindrical die and the punch to form the pipe, the latter acting as a mandrel.

(F.4) centrifugally cast pipe: pipe formed from the solidification of molten metal in a rotating mold. Both metal and sand molds are used. After casting, the pipe is machined, to sound metal, on the internal and external diameters to the surface roughness and dimensional requirements of the applicable material specification.

One variation of this process utilizes autofrettage (hydraulic expansion) and heat treatment, above the recrystallization temperature of the material, to produce a wrought structure.

(F.5) statically cast pipe: pipe formed by the solidification of molten metal in a sand mold.

pipe supporting elements: pipe supporting elements consist of hangers, supports, and structural attachments.

hangers and supports: hangers and supports include elements which transfer the load from the pipe or structural attachment to the supporting structure or equipment. They include hanging type fixtures, such as hanger rods, spring hangers, sway braces, counterweights, turnbuckles, struts, chains, guides, and anchors, and bearing type fixtures, such as saddles, bases, rollers, brackets, and sliding supports.

structural attachments: structural attachments include elements which are welded, bolted, or clamped to the pipe, such as clips, lugs, rings, clamps, clevises, straps, and skirts.

porosity: cavity-type discontinuities formed by gas entrapment during metal solidification.

postweld heat treatment: see *heat treatments.*

preheating: see *heat treatments.*

pressure: an application of force per unit area; fluid pressure (an application of internal or external fluid force per unit area on the pressure boundary of piping components).

Procedure Qualification Record (PQR): a record of the welding data used to weld a test coupon. The PQR is a record of variables recorded during the welding of the test coupons. It also contains the test results of the tested specimens. Recorded variables normally fall within a small range of the actual variables that will be used in production welding.

readily accessible: for visual examination, readily accessible inside surfaces are defined as those inside surfaces which can be examined without the aid of optical devices. (This definition does not prohibit the use of optical devices for a visual examination; however, the selection of the device should be a matter of mutual agreement between the owner and the fabricator or erector.)

Reid vapor pressure: the vapor pressure of a flammable or combustible liquid as determined by ASTM Standard Test Method D 323 Vapor Pressure of Petroleum Products (Reid Method).

reinforcement of weld: weld metal on the face of a groove weld in excess of the metal necessary for the specified weld size.

restraint: any device which prevents, resists, or limits movement of a piping system.

root opening: the separation between the members to be joined, at the root of the joint.

root penetration: the depth a groove weld extends into the root opening of a joint measured on the centerline of the root cross section.

seal weld: a weld used on a pipe joint primarily to obtain fluid tightness as opposed to mechanical strength.

Copyright ASME International
Provided by IHS under license with ASME
No reproduction or networking permitted without license from IHS Not for Resale

semiautomatic arc welding: arc welding with equipment which controls only the filler metal feed. The advance of the welding is manually controlled.

shall: "shall" or "shall not" is used to indicate that a provision or prohibition is mandatory.

shielded metal arc welding: an arc welding process wherein coalescence is produced by heating with an electric arc between a covered metal electrode and the work. Shielding is obtained from decomposition of the electrode covering. Pressure is not used and filler metal is obtained from the electrode.

should: "should" or "it is recommended" is used to indicate that a provision is not mandatory but recommended as good practice.

size of weld

groove weld: the joint penetration (depth of chamfering plus the root penetration when specified).

fillet weld: for equal leg fillet welds, the leg lengths of the largest isosceles right triangle which can be inscribed within the fillet weld cross section. For unequal leg fillet welds, the leg lengths of the largest right triangle which can be inscribed within the fillet weld cross section.

slag inclusion: nonmetallic solid material entrapped in weld metal or between weld metal and base metal.

soldering: a metal joining process wherein coalescence is produced by heating to suitable temperature and by using a nonferrous alloy fusible at temperatures below 800°F (425°C) and having a melting point below that of the base metals being joined. The filler metal is distributed between closely fitted surfaces of the joint by capillary action. In general, solders are lead-tin alloys and may contain antimony, bismuth, silver, and other elements.

steel: an alloy of iron and carbon with no more than 2% carbon by weight. Other alloying elements may include manganese, sulfur, phosphorus, silicon, aluminum, chromium, copper, nickel, molybdenum, vanadium, and others depending upon the type of steel. For acceptable material specifications for steel refer to Chapter III, Materials.

stress-relieving: see *heat treatments.*

submerged arc welding: an arc welding process wherein coalescence is produced by heating with an electric arc or arcs between a bare metal electrode or electrodes and the work. The welding is shielded by a blanket of granular, fusible material on the work. Pressure is not used and filler metal is obtained from the electrode and sometimes from a supplementary welding rod.

supplementary steel: steel members which are installed between existing members for the purpose of installing supports for piping or piping equipment.

swivel joint: a component which permits single-plane rotational movement in a piping system.

tack weld: a weld made to hold parts of a weldment in proper alignment until the final welds are made.

throat of a fillet weld

theoretical: the distance from the beginning of the root of the joint perpendicular to the hypotenuse of the largest right triangle that can be inscribed within the fillet weld cross section.

actual: the shortest distance from the root of a fillet weld to its face.

toe of weld: the junction between the face of the weld and the base metal.

tube: refer to *pipe and tube.*

tungsten electrode: a nonfiller metal electrode used in arc welding, consisting of a tungsten wire.

undercut: a groove melted into the base metal adjacent to the toe of a weld and not filled with weld metal.

visual examination: the observation of whatever portions of components, joints, and other piping elements that are exposed to such observation either before, during, or after manufacture, fabrication, assembly, erection, inspection, or testing. This examination may include verification of the applicable requirements for materials, components, dimensions, joint preparation, alignment, welding or joining, supports, assembly, and erection.

weld: a localized coalescence of metal which is produced by heating to suitable temperatures, with or without the application of pressure, and with or without the use of filler metal. The filler metal shall have a melting point approximately the same as the base metal.

welder: one who is capable of performing a manual or semiautomatic welding operation.

Welder/Welding Operator Performance Qualification (WPQ): demonstration of a welder's ability to produce welds in a manner described in a welding procedure specification that meets prescribed standards.

welding operator: one who operates machine or automatic welding equipment.

Welding Procedure Specification (WPS): a written qualified welding procedure prepared to provide direction for making production welds to Code requirements. The WPS or other documents may be used to provide direction to the welder or welding operator to assure compliance with the Code requirements.

weldment: an assembly whose component parts are joined by welding.

Copyright ASME International
Provided by IHS under license with ASME
No reproduction or networking permitted without license from IHS
Not for Resale

Chapter II
Design

PART 1
CONDITIONS AND CRITERIA

101 DESIGN CONDITIONS

101.1 General

These design conditions define the pressures, temperatures and various forces applicable to the design of power piping systems. Power piping systems shall be designed for the most severe condition of coincident pressure, temperature and loading, except as herein stated. The most severe condition shall be that which results in the greatest required pipe wall thickness and the highest flange rating.

101.2 Pressure

All pressures referred to in this Code are expressed in pounds per square inch and kilopascals above atmospheric pressure, i.e., psig [kPa (gage)], unless otherwise stated.

101.2.2 Internal Design Pressure. The internal design pressure shall be not less than the maximum sustained operating pressure (MSOP) within the piping system including the effects of static head.

101.2.4 External Design Pressure. Piping subject to external pressure shall be designed for the maximum differential pressure anticipated during operating, shutdown, or test conditions.

101.3 Temperature

101.3.1 All temperatures referred to in this Code, unless otherwise stated, are the average metal temperatures of the respective materials expressed in degrees Fahrenheit, i.e., °F (Celsius, i.e., °C).

101.3.2 Design Temperature

(A) The piping shall be designed for a metal temperature representing the maximum sustained condition expected. The design temperature shall be assumed to be the same as the fluid temperature unless calculations or tests support the use of other data, in which case the design temperature shall not be less than the average of the fluid temperature and the outside wall temperature.

(B) Where a fluid passes through heat exchangers in series, the design temperature of the piping in each section of the system shall conform to the most severe temperature condition expected to be produced by the heat exchangers in that section of the system.

(C) For steam, feedwater, and hot water piping leading from fired equipment (such as boiler, reheater, superheater, economizer, etc.), the design temperature shall be based on the expected continuous operating condition plus the equipment manufacturers guaranteed maximum temperature tolerance. For operation at temperatures in excess of this condition, the limitations described in para. 102.2.4 shall apply.

(D) Accelerated creep damage, leading to excessive creep strains and potential pipe rupture, caused by extended operation above the design temperature shall be considered in selecting the design temperature for piping to be operated above 800°F.

101.4 Ambient Influences

101.4.1 Cooling Effects on Pressure. Where the cooling of a fluid may reduce the pressure in the piping to below atmospheric, the piping shall be designed to withstand the external pressure or provision shall be made to break the vaccum.

101.4.2 Fluid Expansion Effects. Where the expansion of a fluid may increase the pressure, the piping system shall be designed to withstand the increased pressure or provision shall be made to relieve the excess pressure.

101.5 Dynamic Effects

101.5.1 Impact. Impact forces caused by all external and internal conditions shall be considered in the piping design. One form of internal impact force is due to the propagation of pressure waves produced by sudden changes in fluid momentum. This phenomena is often called water or steam "hammer." It may be caused by the rapid opening or closing of a valve in the system. The designer should be aware that this is only one example of this phenomena and that other causes of impact loading exist.

101.5.2 Wind. Exposed piping shall be designed to withstand wind loadings, using meteorological data to determine wind forces. Where state or municipal ordinances covering the design of building structures are in effect and specify wind loadings, these values shall be considered the minimum design values.

101.5.3 Earthquake. The effect of earthquakes, where applicable, shall be considered in the design of piping, piping supports, and restraints, using data for the site as a guide in assessing the forces involved. However,

Copyright ASME International
Provided by IHS under license with ASME
No reproduction or networking permitted without license from IHS
Not for Resale

earthquakes need not be considered as acting concurrently with wind.

101.5.4 Vibration. Piping shall be arranged and supported with consideration of vibration [see paras. 120.1(c) and 121.7.5].

101.6 Weight Effects

The following weight effects combined with loads and forces from other causes shall be taken into account in the design of piping. Piping shall be carried on adjustable hangers or properly leveled rigid hangers or supports, and suitable springs, sway bracing, vibration dampeners, etc., shall be provided where necessary.

101.6.1 Live Load. The live load consists of the weight of the fluid transported. Snow and ice loads shall be considered in localities where such conditions exist.

101.6.2 Dead Load. The dead load consists of the weight of the piping components, insulation, protective lining and coating, and other superimposed permanent loads.

101.6.3 Test or Cleaning Fluid Load. The test or cleaning fluid load consists of the weight of the test or cleaning fluid.

101.7 Thermal Expansion and Contraction Loads

101.7.1 General. The design of piping systems shall take account of the forces and moments resulting from thermal expansion and contraction, and from the effects of expansion joints.

Thermal expansion and contraction shall be provided for preferably by pipe bends, elbows, offsets or changes in direction of the pipeline.

Hangers and supports shall permit expansion and contraction of the piping between anchors.

101.7.2 Expansion, Swivel, or Ball Joints, and Flexible Metal Hose Assemblies. Joints of the corrugated bellows, slip, sleeve, ball, or swivel types and flexible metal hose assemblies may be used if their materials conform to this Code, their structural and working parts are of ample proportions, and their design prevents the complete disengagement of working parts while in service. However, flexible metal hose assemblies, and expansion joints of the corrugated bellows, slip, or sleeve type shall not be used in any piping system connecting the boiler and the first stop valve in that system.

102 DESIGN CRITERIA

102.1 General

These criteria cover pressure-temperature ratings for standard and specially designed components, allowable stresses, stress limits, and various allowances to be used in the design of piping and piping components.

102.2 Pressure-Temperature Ratings for Piping Components

102.2.1 Components Having Specific Ratings. Pressure-temperature ratings for certain piping components have been established and are contained in some of the standards listed in Table 126.1.

Where piping components have established pressure-temperature ratings which do not extend to the upper material temperature limits permitted by this Code, the pressure-temperature ratings between those established and the upper material temperature limit may be determined in accordance with the rules of this Code, but such extensions are subject to restrictions, if any, imposed by the standards.

Standard components may not be used at conditions of pressure and temperature which exceed the limits imposed by this Code.

102.2.2 Components Not Having Specific Ratings. Some of the Standards listed in Table 126.1, such as those for buttwelding fittings, specify that components shall be furnished in nominal thicknesses. Unless limited elsewhere in this Code, such components shall be rated for the same allowable pressures as seamless pipe of the same nominal thickness, as determined in paras. 103 and 104 for material having the same allowable stress.

Piping components, such as pipe, for which allowable stresses have been developed in accordance with para. 102.3, but which do not have established pressure ratings, shall be rated by rules for pressure design in para. 104, modified as applicable by other provisions of this Code.

Should it be desired to use methods of manufacture or design of components not covered by this Code or not listed in referenced standards, it is intended that the manufacturer shall comply with the requirements of paras. 103 and 104 and other applicable requirements of this Code for design conditions involved. Where components other than those discussed above, such as pipe or fittings not assigned pressure-temperature ratings in an American National Standard, are used, the manufacturer's recommended pressure-temperature rating shall not be exceeded.

102.2.3 Ratings: Normal Operating Condition. A piping system shall be considered safe for operation if the maximum sustained operating pressure and temperature which may act on any part or component of the system does not exceed the maximum pressure and temperature allowed by this Code for that particular part or component. The design pressure and temperature shall not exceed the pressure-temperature rating for the particular component and material as defined in the applicable specification or standard listed in Table 126.1.

102.2.4 Ratings: Allowance for Variation From Normal Operation. The maximum internal pressure and temperature allowed shall include considerations for occasional

Copyright ASME International
Provided by IHS under license with ASME
No reproduction or networking permitted without license from IHS
Not for Resale

loads and transients of pressure and temperature.

It is recognized that variations in pressure and temperature inevitably occur, and therefore the piping system, except as limited by component standards referred to in para. 102.2.1 or by manufacturers of components referred to in para. 102.2.2, shall be considered safe for occasional short operating periods at higher than design pressure or temperature. For such variations, either pressure or temperature, or both, may exceed the design values if the computed circumferential pressure stress does not exceed the maximum allowable stress from Appendix A for the coincident temperature by

(A) 15% if the event duration occurs for no more than 8 hr at any one time and not more than 800 hr/year, or

(B) 20% if the event duration occurs for not more than 1 hr at any one time and not more than 80 hr/year

102.2.5 Ratings at Transitions. Where piping systems operating at different design conditions are connected, a division valve shall be provided having a pressure-temperature rating equal to or exceeding the more severe conditions. See para. 122 for design requirements pertaining to specific piping systems.

102.3 Allowable Stress Values and Other Stress Limits for Piping Components

102.3.1 Allowable Stress Values

(A) Allowable stress values to be used for the design of power piping systems are given in the Tables in Appendix A, also referred to in this Code Section as the Allowable Stress Tables. These tables list allowable stress values for commonly used materials at temperatures appropriate to power piping installations. In every case the temperature is understood to be the metal temperature. Where applicable, weld joint efficiency factors and casting quality factors are included in the tabulated values. Thus, the tabulated values are values of *S*, *SE*, or *SF*, as applicable.

(B) Allowable stress values in shear shall not exceed 80% of the values determined in accordance with the rules of para. 102.3.1(A). Allowable stress values in bearing shall not exceed 160% of the determined values.

(C) The basis for establishing the allowable stress values in this Code Section are the same as those in the ASME Boiler and Pressure Vessel Code, Section II, Part D, Appendix 1; except that allowable stresses for cast iron and ductile iron are in accordance with Section VIII, Division 1, Appendix P for Tables UCI-23 and UCD-23, respectively.

102.3.2 Limits of Calculated Stresses Due to Sustained Loads and Thermal Expansion

(A) Internal Pressure Stress. The calculated stress due to internal pressure shall not exceed the allowable stress values given in the Allowable Stress Tables in Appendix A. This criterion is satisfied when the wall thickness of the piping component, including any reinforcement, meets the requirements of para. 104.1 through 104.7, excluding para. 104.1.3 but including the consideration of allowances permitted by paras. 102.2.4, 102.3.3(B), and 102.4.

(B) External Pressure Stress. Piping subject to external pressure shall be considered safe when the wall thickness and means of stiffening meet the requirements of para. 104.1.3.

(C) Allowable Stress Range for Expansion Stresses. Except as permitted in para. 102.3.2(D), the thermal expansion stress range S_E (see paras. 104.8.3 and 119.6.4) shall not exceed the allowable stress range S_A given by the following formula:

$$S_A = f(1.25S_c + 0.25S_h) \quad (1)$$

where

S_c = basic material allowable stress at minimum (cold) temperature from the Allowable Stress Tables

S_h = basic material allowable stress at maximum (hot) temperature from the Allowable Stress Tables

f = stress range reduction factor for cyclic conditions for total number N of full temperature cycles over total number of years during which system is expected to be in operation, from Table 102.3.2(C)

Table 102.3.2(C) Stress Range Reduction Factors

Number of Equivalent Full Temperature Cycles, *N*	*f*
7,000 and less	1.0
7,000–14,000	0.9
14,000–22,000	0.8
22,000–45,000	0.7
45,000–100,000	0.6
100,000 and over	0.5

In determining the basic material allowable stresses, S_c and S_h, joint efficiencies need not be applied. The values of allowable stress in the Allowable Stress Tables for welded pipe may be divided by the weld joint factors listed in para. 102.4.3.

Stress reduction factors apply essentially to noncorrosive service and to corrosion resistant materials where employed to minimize the reduction in cyclic life caused by corrosive action.

If the range of temperature change varies, equivalent full temperature cycles may be computed as follows:

$$N = N_E + r_1^5 N_1 + r_2^5 N_2 + \ldots + r_n^5 N_n \quad (2)$$

where

Copyright ASME International
Provided by IHS under license with ASME
No reproduction or networking permitted without license from IHS Not for Resale

N_E = number of cycles at full temperature change ΔT_E for which expansion stress S_E has been calculated

$N_1, N_2, \ldots, N_n$ = number of cycles at lesser temperature changes $\Delta T_1, \Delta T_2, \ldots, \Delta T_n$

$r_1, r_2, \ldots, r_n$ = ratio of lesser temperature cycles to that for any which the expansion stress S_E has been calculated
= $\Delta T_1/\Delta T_E, \Delta T_2/\Delta T_E, \ldots, \Delta T_n/\Delta T_E$

(D) Longitudinal Stresses. The sum of the longitudinal stresses S_L due to pressure, weight, and other sustained loads shall not exceed the allowable stress in the hot condition S_h. Where the sum of these stresses is less than S_h, the difference may be used as an additional thermal expansion allowance, which is the second term on the right side of Eq. (13) of para. 104.8.3.

The longitudinal pressure stress S_{lp} shall be determined by either of the following equations:

$$S_{lp} = \frac{PD_o}{4t_n}$$

or

$$S_{lp} = \frac{Pd_n^2}{D_n^2 - d_n^2}$$

102.3.3 Limits of Calculated Stresses due to Occasional Loads

(A) During Operation. The sum of the longitudinal stresses produced by internal pressure, live and dead loads and those produced by occasional loads, such as the temporary supporting of extra weight, may exceed the allowable stress values given in the Allowable Stress Tables by the amounts and durations of time given in para. 104.8.2.

(B) During Test. During pressure tests performed in accordance with para. 137, the circumferential (hoop) stress shall not exceed 90% of the yield strength (0.2% offset) at test temperature. In addition, the sum of longitudinal stresses due to test pressure and live and dead loads at the time of test, excluding occasional loads, shall not exceed 90% of the yield strength at test temperature.

102.4 Allowances

102.4.1 Corrosion or Erosion. When corrosion or erosion is expected, an increase in wall thickness of the piping shall be provided over that required by other design requirements. This allowance in the judgment of the designer shall be consistent with the expected life of the piping.

102.4.2 Threading and Grooving. The calculated minimum thickness of piping (or tubing) which is to be threaded shall be increased by an allowance equal to thread depth; dimension h of ASME B1.20.1 or equivalent shall apply. For machined surfaces or grooves, where the tolerance is not specified, the tolerance shall be assumed to be $^1/_{64}$ in. (0.40 mm) in addition to the specified depth of cut. The requirements of para. 104.1.2(C) shall also apply.

102.4.3 Weld Joint Efficiency Factors. The use of joint efficiency factors for welded pipe is required by this Code. The factors in Table 102.4.3 are based on full penetration welds. These factors are included in the allowable stress values given in Appendix A. The factors in Table 102.4.3 apply to both straight seam and spiral seam welded pipe.

102.4.4 Mechanical Strength. Where necessary for mechanical strength to prevent damage, collapse, excessive sag, or buckling of pipe due to superimposed loads from supports or other causes, the wall thickness of the pipe should be increased; or, if this is impractical or would cause excessive local stresses, the superimposed loads or other causes shall be reduced or eliminated by other design methods. The requirements of para. 104.1.2(C) shall also apply.

102.4.5 Bending. The minimum wall thickness at any point on the bend shall conform to (A) or (B) below.

(A) The minimum wall thickness at any point in a completed bend shall not be less than required by Eq. (3) or (3A) of para. 104.1.2(A).

(A.1) Table 102.4.5 is a guide to the designer who must specify wall thickness for ordering pipe. In general it has been the experience that when good shop practices are employed, the minimum thicknesses of straight pipe shown in Table 102.4.5 should be sufficient for bending, and still meet the minimum thickness requirements of para. 104.1.2(A).

(A.2) The bend thinning allowance in Table 102.4.5 may be provided in all parts of the cross section of the pipe circumference without any detrimental effects being produced.

(B) The minimum required thickness t_m of a bend, after bending, in its finished form, shall be determined in accordance with Eq. (3B) or (3C):

$$t_m = \frac{PD_o}{2(SE/I + Py)} + A \quad (3B)$$

or

$$t_m = \frac{Pd + 2SEA/I + 2yPA}{2(SE/I + Py - P)} \quad (3C)$$

where at the intrados (inside of bend)

$$I = \frac{4(R/D_o) - 1}{4(R/D_o) - 2} \quad (3D)$$

Copyright ASME International
Provided by IHS under license with ASME
No reproduction or networking permitted without license from IHS
Not for Resale

Table 102.4.3 Longitudinal Weld Joint Efficiency Factors

No.	Type of Joint	Type of Seam	Examination	Factor *E*
1	Furnace butt weld, continuous weld 	Straight	As required by listed specification	0.60 [Note (1)]
2	Electric resistance weld 	Straight or spiral	As required by listed specification	0.85 [Note (1)]
3	Electric fusion weld			
	(a) Single butt weld (without filler metal) 	Straight or spiral	As required by listed specification	0.85
			Additionally 100% radiographed	1.00 [Note (2)]
	(b) Single butt weld (with filler metal) 	Straight or spiral	As required by listed specification	0.80
			Additionally 100% radiographed	1.00 [Note (2)]
	(c) Double butt weld (without filler metal) 	Straight or spiral	As required by listed specification	0.90
			Additionally 100% radiographed	1.00 [Note (2)]
	(d) Double butt weld (with filler metal) 	Straight or spiral	As required by listed specification	0.90
			Additionally 100% radiographed	1.00 [Note (2)]
4	API 5L Submerged arc weld (SAW) Gas metal arc weld (GMAW) Combined GMAW, SAW 	Straight with one or two seams Spiral	As required by specification	0.90
			Additionally 100% radiographed	1.00 [Note (2)]

NOTES:
(1) It is not permitted to increase the longitudinal weld joint efficiency factor by additional examination for joint 1 or 2.
(2) Radiography shall be in accordance with the requirements of para. 136.4.5 or the material specification as applicable.

and at the extrados (outside of bend)

$$I = \frac{4(R/D_o) + 1}{4(R/D_o) + 2} \quad (3E)$$

and at the sidewall on the bend center line, $I = 1.0$ where

R = bend radius of pipe bend

Thickness variations from the intrados to the extrados and at the ends of the bend shall be gradual. The thickness requirements apply at the center of the bend arc, at the intrados, extrados, and bend centerline (see Fig. 104.2.1). The minimum thickness at the ends of the bends shall be not less than the requirements of para. 104.1.2 for straight pipe.

102.4.6 Casting Quality Factors

(A) General. The use of a casting quality factor is required for all cast components which use the allowable stress values of Appendix A as the design basis. A factor of 0.80 is included in the allowable stress values for all castings given in Appendix A.

This required factor does not apply to component standards listed in Table 126.1, if such standards define allowable pressure-temperature ratings or provide the allowable stresses to be used as the design basis for the component.

Copyright ASME International
Provided by IHS under license with ASME
No reproduction or networking permitted without license from IHS Not for Resale

Table 102.4.5

Radius of Bends	Min. Thickness Recommended Prior to Bending
6 pipe diameters or greater	$1.06t_m$
5 pipe diameters	$1.08t_m$
4 pipe diameters	$1.14t_m$
3 pipe diameters	$1.25t_m$

GENERAL NOTES:
(a) Interpolation is permissible for bending to intermediate radii.
(b) t_m is determined by Eq. (3) or (3A) of para. 104.1.2(A).
(c) Pipe diameter is the nominal diameter as tabulated in ASME B36.10M, Tables 2 and 4, and ASME B36.19M, Table 1. For piping with a diameter not listed in these Tables, and also for tubing, the nominal diameter corresponds with the outside diameter.

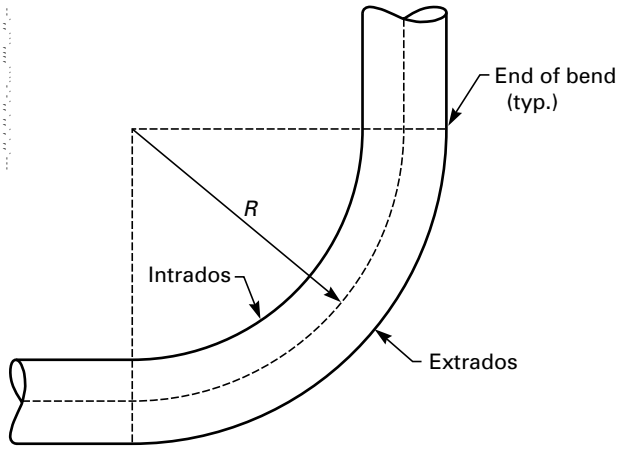

Fig. 104.2.1 Nomenclature for Pipe Bends

(B) For steel materials, a casting quality factor not exceeding 1.0 may be applied when the following requirements are met.

(B.1) All steel castings having a nominal body thickness of 4½ in. (114 mm) or less (other than pipe flanges, flanged valves and fittings, and butt welding end valves, all complying with ASME B16.5 or B16.34) shall be inspected as follows:

(B.1.1) All critical areas, including the junctions of all gates, risers, and abrupt changes in section or direction and area of weld end preparation shall be radiographed in accordance with Article 2 of Section V of the ASME Boiler and Pressure Vessel Code, and the radiographs shall conform to the requirements of ASTM E 446, Reference Radiographs for Steel Castings up to 2 in. (50 mm) in Thickness or E 186 Reference Radiographs for Heavy Walled [2 to 4½ in. (50 to 114 mm)] Steel Castings, depending upon the section thickness. The maximum acceptable severity level for a 1.0 quality factor shall be as listed in Table 102.4.6(B.1.1).

(B.1.2) All surfaces of each casting, including machined gasket seating surfaces, shall be examined by the magnetic particle or dye penetrant method after heat treatment. The examination techniques shall be in accordance with Article 6 or 7, as applicable, and Article 9 of Section V of the ASME Boiler and Pressure Vessel Code. Magnetic particle or dye penetrant indications exceeding degree 1 of Type I, degree 2 of Type II, and degree 3 of Type III, and exceeding degree 1 of Types IV and V of ASTM E 125, Standard Reference Photographs for Magnetic Particle Indications on Ferrous Castings, are not acceptable and shall be removed.

(B.1.3) Where more than one casting of a particular design is produced, each of the first five castings shall be inspected as above. Where more than five castings are being produced, the examination shall be performed on the first five plus one additional casting to represent each five additional castings. If this additional casting proves to be unacceptable, each of the remaining castings in the group shall be inspected.

(B.1.4) Any discontinuities in excess of the maximum permitted in (B.1.1) and (B.1.2) above shall be removed, and the casting may be repaired by welding after the base metal has been inspected to assure complete removal of discontinuities. [Refer to para. 127.4.11(A).] The complete 4d repair shall be subject to reinspection by the same method as was used in the original inspection and shall be reinspected after any required postweld heat treatment.

(B.2) All steel castings having a nominal body thickness greater than 4½ in. (114 mm) (other than pipe flanges, flanged valves and fittings, and butt welding end valves, all complying with ASME B16.5 or B16.34) shall be inspected as follows:

(B.2.1) All surfaces of each casting including machined gasket seating surfaces, shall be examined by the magnetic particle or dye penetrant method after heat treatment. The examination techniques shall be in accordance with Article 6 or 7, as applicable, and with Article 9 of Section V of the ASME Boiler and Pressure Vessel Code. Magnetic particle or dye penetrant indications exceeding degree 1 of Type I, degree 2 of Type II, and degree 3 of Type III and exceeding degree 1 of Types IV and V of ASTM E 125, Standard Reference Photographs for Magnetic Particle Indications on Ferrous Castings, shall be removed.

(B.2.2) All parts of castings shall be subjected to complete radiographic inspection in accordance with Article 2 of Section V of the ASME Boiler and Pressure Vessel Code, and the radiographs shall conform to the requirements of ASTM E 280, Reference Radiographs for Heavy Walled [4½ to 12 in. (114 to 305 mm)] Steel Castings.

The maximum acceptable severity level for a 1.0 quality factor shall be as listed in Table 102.4.6 (B.2.2).

Copyright ASME International
Provided by IHS under license with ASME
No reproduction or networking permitted without license from IHS
Not for Resale

Table 102.4.6(B.1.1)

Discontinuity Category Designation	Severity Level ≤1 in. (25 mm) Thick	Severity Level >1 in. (25 mm) Thick
For E 446 [Castings up to 2 in. (50 mm) Thickness]		
A	1	2
B	2	3
C Types 1, 2, 3, and 4	1	3
D, E, F, and G	None acceptable	None acceptable

Discontinuity Category Designation	Severity Level
For E 186 [Castings 2 to 4½ in. (50 to 114 mm) Thickness]	
A, B, and Types 1 and 2 of C	2
Type 3 of C	3
D, E, and F	None acceptable

Table 102.4.6(B.2.2)

Discontinuity Category Designation	Severity Level
A, B, and Types 1,2, and 3 of C	2
D, E, and F	None acceptable

(B.2.3) Any discontinuities in excess of the maximum permitted in (B.2.1) and (B.2.2) above shall be removed and may be repaired by welding after the base metal has been magnetic particle or dye penetrant inspected to assure complete removal of discontinuities. [Refer to para. 127.4.11(A).]

(B.2.4) All weld repairs of depth exceeding 1 in. (25 mm) or 20% of the section thickness, whichever is the lesser, shall be inspected by radiography in accordance with (B.2.2) above and by magnetic particle or dye penetrant inspection of the finished weld surface. All weld repairs of depth less than 20% of the section thickness, or 1 in. (25 mm), whichever is the lesser, and all weld repairs of section that cannot be effectively radiographed shall be examined by magnetic particle or dye penetrant inspection of the first layer, of each ¼ in. (6 mm) thickness of deposited weld metal, and of the finished weld surface. Magnetic particle or dye penetrant testing of the finished weld surface shall be done after postweld heat treatment.

(C) For cast iron and nonferrous materials, no increase of the casting quality factor is allowed except when special methods of examination, prescribed by the material specification, are followed. If such increase is specifically permitted by the material specification, a factor not exceeding 1.0 may be applied.

PART 2
PRESSURE DESIGN OF PIPING COMPONENTS

103 CRITERIA FOR PRESSURE DESIGN OF PIPING COMPONENTS

The design of piping components shall consider the effects of pressure and temperature, in accordance with paras. 104.1 through 104.7, including the consideration of allowances permitted by paras. 102.2.4 and 102.4. In addition, the mechanical strength of the piping system shall be determined adequate in accordance with para. 104.8 under other applicable loadings, including but not limited to those loadings defined in para. 101.

104 PRESSURE DESIGN OF COMPONENTS

104.1 Straight Pipe

104.1.2 Straight Pipe Under Internal Pressure

(A) Minimum Wall Thickness. The minimum thickness of pipe wall required for design pressures and for temperatures not exceeding those for the various materials listed in the Allowable Stress Tables, including allowances for mechanical strength, shall not be less than that determined by Eq. (3) or (3A), as follows:

$$t_m = \frac{PD_o}{2(SE + Py)} + A \quad (3)^1$$

$$t_m = \frac{Pd + 2SEA + 2yPA}{2(SE + Py - P)} \quad (3A)^1$$

Design pressure shall not exceed

$$P = \frac{2SE(t_m - A)}{D_o - 2y(t_m - A)} \quad (4)^1$$

[1] *SF* shall be used in place of *SE* where casting quality factors are intended. See definition of *SE*. Units of *P* and *SE* must be identical. Appendix A values must be converted to kPa when the design pressure is in kPa.

Copyright ASME International
Provided by IHS under license with ASME
No reproduction or networking permitted without license from IHS Not for Resale

$$P = \frac{2SE(t_m - A)}{d - 2y(t_m - A) + 2t_m} \qquad (4A)^1$$

where the nomenclature used above are:

(A.1) t_m = minimum required wall thickness, in. (mm)

(A.1.1) If pipe is ordered by its nominal wall thickness, the manufacturing tolerance on wall thickness must be taken into account. After the minimum pipe wall thickness t_m is determined by Eq. (3) or (3A), this minimum thickness shall be increased by an amount sufficient to provide the manufacturing tolerance allowed in the applicable pipe specification or required by the process. The next heavier commercial wall thickness shall then be selected from thickness schedules such as contained in ASME B36.10M or from manufacturers' schedules for other than standard thickness.

(A.1.2) To compensate for thinning in bends, refer to para. 102.4.5.

(A.1.3) For cast piping components, refer to para. 102.4.6.

(A.1.4) Where ends are subject to forming or machining for jointing, the wall thickness of the pipe, tube, or component after such forming or machining shall not be less than t_m minus the amount provided for removal by para. 104.1.2 (A.6.1).

(A.2) P = internal design pressure, psig [kPa (gage)]

NOTE: When computing the design pressure for a pipe of a definite minimum wall thickness by Eq. (4) or (4A), the value of P obtained by these Formulas may be rounded out to the next higher unit of 10. For cast iron pipe, see para. 104.1.2(B).

(A.3) D_o = outside diameter of pipe, in. (mm). For design calculations, the outside diameter of pipe as given in tables of standards and specifications shall be used in obtaining the value of t_m. When calculating the allowable working pressure of pipe on hand or in stock, the actual measured outside diameter and actual measured minimum wall thickness at the thinner end of the pipe may be used to calculate this pressure.

(A.4) d = inside diameter of pipe, in. (mm). For design calculations, the inside diameter of pipe is the maximum possible value allowable under the purchase specification. When calculating the allowable working pressure of pipe on hand or in stock, the actual measured inside diameter and actual measured minimum wall thickness at the thinner end of the pipe may be used to calculate this pressure.

(A.5) SE or SF = maximum allowable stress in material due to internal pressure and joint efficiency (or casting quality factor) at the design temperature, psi (kPa). The value of SE or SF shall not exceed that given in Appendix A, for the respective material and design temperature. These values include the weld joint efficiency E, or the casting factor F.

(A.6) A = additional thickness, in. (mm):

(A.6.1) to compensate for material removed in threading, grooving, etc., required to make a mechanical joint, refer to para. 102.4.2

(A.6.2) to provide for mechanical strength of the pipe, refer to para. 102.4.4 (not intended to provide for extreme conditions of misapplied external loads or for mechanical abuse)

(A.6.3) to provide for corrosion and/or erosion, refer to para. 102.4.1

(A.7) y = coefficient having values as given in Table 104.1.2(A)

(B) Thickness of gray and ductile iron fittings conveying liquids may be determined from ANSI/AWWA C110/A21.10 or ANSI/AWWA C153/A21.53. The thickness of ductile iron pipe may be determined by ANSI/AWWA C115/A21.15 or ANSI/AWWA C150/A21.50. These thicknesses include allowances for foundry tolerances and water hammer.

(C) While the thickness determined from Eq. (3) or (3A) is theoretically ample for both bursting pressure and material removed in threading, the following minimum requirements are mandatory to furnish added mechanical strength.

(C.1) Where steel pipe is threaded and used for steam service at pressure above 250 psi (1 750 kPa) or for water service above 100 psi (700 kPa) with water temperature above 220°F (105°C), the pipe shall be seamless having the minimum ultimate tensile strength of 48,000 psi (330 MPa) and a weight at least equal to Schedule 80 of ASME B36.10M.

(C.2) Where threaded brass or copper pipe is used for the services described in (C.1) above, it shall comply with pressure and temperature classifications permitted for these materials by other paragraphs of this Code and shall have a wall thickness at least equal to that specified above for steel pipe of corresponding size.

(C.3) Plain end nonferrous pipe or tube shall have minimum wall thicknesses as follows:

Copyright ASME International
Provided by IHS under license with ASME
No reproduction or networking permitted without license from IHS Not for Resale

Table 104.1.2(A) Values of *y*

Temperature, °F	900 and Below	950	1,000	1,050	1,100	1,150	1,200	1,250 and Above
Temperature, °C	482 and Below	510	538	566	593	621	649	677 and Above
Ferritic steels	0.4	0.5	0.7	0.7	0.7	0.7	0.7	0.7
Austenitic steels	0.4	0.4	0.4	0.4	0.5	0.7	0.7	0.7
Nickel Alloys UNS Nos. N08800, N08810, N08825	0.4	0.4	0.4	0.4	04	0.4	0.5	0.7

GENERAL NOTES:

(a) The value of y may be interpolated between the 50°F (27.8°C) values shown in the Table. For cast iron and nonferrous materials, y equals 0.4.

(b) For pipe with a D_o/t_m ratio less than 6, the value of y for ferritic and austenitic steels designed for temperatures of 900°F (480°C) and below shall be taken as:

$$y = \frac{d}{d + D_o} \quad (5)$$

For nominal sizes smaller than NPS $^3/_4$, the thickness shall not be less than that specified for Type K of ASTM B 88.

For nominal sizes NPS $^3/_4$ and larger, the wall thickness shall not be less than 0.049 in. (1.25 mm). The wall thickness shall be further increased, as required, in accordance with para. 102.4.

104.1.3 Straight Pipe Under External Pressure. For determining wall thickness and stiffening requirements for straight pipe under external pressure, the procedures outlined in UG-28, UG-29, and UG-30 of Section VIII, Division 1 of the ASME Boiler and Pressure Vessel Code shall be followed.

104.2 Curved Segments of Pipe

104.2.1 Pipe Bends. Pipe bends shall be subject to the following limitations:

(A) The minimum wall thickness shall meet the requirements of para. 102.4.5 and the fabrication requirements of para. 129.

(B) For ferrous material, when the radius of a bend is 5 nominal pipe diameters or greater, and the nominal wall thickness of the pipe is schedule 40 or thicker, the difference between maximum and minimum diameters shall not exceed 8% of average measured outside diameter of the pipe before bending.

(C) Greater flattening may be permitted or less flattening may be required by the design, depending upon the service, the material, and the stress level involved.

104.2.2 Elbows. Elbows manufactured in accordance with the standards listed in Table 126.1 are suitable for use at the pressure-temperature ratings specified by such standards, subject to the requirements of para. 106.

104.3 Intersections

104.3.1 Branch Connections

(A) This paragraph gives rules governing the design of branch connections to sustain internal and external pressure in cases where the axes of the branch and the run intersect, and the angle between the axes of the branch and of the run is between 45 deg and 90 deg, inclusive.

Branch connections in which the smaller angle between the axes of the branch and the run is less than 45 deg or branch connections where the axes of the branch and the run do not intersect impose special design and fabrication problems. The rules given herein may be used as a guide, but sufficient additional strength must be provided to assure safe service. Such branch connections shall be designed to meet the requirement of para. 104.7.

(B) Branch connections in piping may be made from materials listed in Appendix A by the use of the following:

(B.1) fittings, such as tees, laterals, and crosses made in accordance with the applicable standards listed in Table 126.1 where the attachment of the branch pipe to the fitting is by butt welding, socket welding, brazing, soldering, threading, or by a flanged connection.

(B.2) weld outlet fittings, such as cast or forged nozzles, couplings and adaptors, or similar items where the attachment of the branch pipe to the fitting is by butt welding, socket welding, threading, or by a flanged connection. Such weld outlet fittings are attached to the run by welding similar to that shown in Fig. 127.4.8(E). Couplings are restricted to a maximum of NPS 3.

Copyright ASME International
Provided by IHS under license with ASME
No reproduction or networking permitted without license from IHS Not for Resale

(B.3) extruded outlets at right angles to the run pipe, in accordance with (G) below, where the attachment of the branch pipe is by butt welding.

(B.4) piping directly attached to the run pipe by welding in accordance with para. 127.4.8 or by socket welding or threading as stipulated below:

(B.4.1) socket welded right angle branch connections may be made by attaching the branch pipe directly to the run pipe provided.

(B.4.1.1) the nominal size of the branch does not exceed NPS 2 or one-fourth of the nominal size of the run, whichever is smaller.

(B.4.1.2) the depth of the socket measured at its minimum depth in the run pipe is at least equal to that shown in ASME B16.11. If the run pipe wall does not have sufficient thickness to provide the proper depth of socket, an alternate type of construction shall be used.

(B.4.1.3) the clearance between the bottom of the socket and the end of the inserted branch pipe is in accordance with Fig. 127.4.4(C).

(B.4.1.4) the size of the fillet weld is not less than 1.09 times the nominal wall thickness of the branch pipe.

(B.4.2) threaded right angle branch connections may be made by attaching the branch pipe directly to the run provided

(B.4.2.1) the nominal size of the branch does not exceed NPS 2 or one-fourth of the nominal size of the run, whichever is smaller.

(B.4.2.2) the minimum thread engagement is: 6 full threads for NPS $\frac{1}{2}$ and NPS $\frac{3}{4}$ branches; 7 for NPS 1, NPS $1\frac{1}{4}$, and NPS $1\frac{1}{2}$ branches; and 8 for NPS 2 branches. If the run pipe wall does not have sufficient thickness to provide the proper depth for thread engagement, an alternative type of construction shall be used.

(C) Branch Connections Not Requiring Reinforcement. A pipe having a branch connection is weakened by the opening that must be made in it. Unless the wall thickness of the branch and/or run pipe is sufficiently in excess of that required to sustain the pressure, it is necessary to provide additional material in order to meet the reinforcement requirements of (D) and (E) below. However, there are certain branch connections for which supporting calculations are not required. These are as follows:

(C.1) branch connections made by the use of a fitting (tee, lateral, cross, or branch weld-on fitting), manufactured in accordance with a standard listed in Table 126.1, and used within the limits of pressure-temperature ratings specified in that standard.

(C.2) branch connections made by welding a coupling or half coupling directly to the run pipe in accordance with Fig. 127.4.8(E) provided the nominal diameter of the branch does not exceed NPS 2 or one-fourth the nominal diameter of the run, whichever is less. The minimum wall thickness of the coupling anywhere in the reinforcement zone (if threads are in the zone, wall thickness is measured from the root of the thread to the minimum O.D.) shall not be less than that of the unthreaded branch pipe. In no case shall the thickness of the coupling be less than extra heavy or Class 3000 rating.

Small branch connections NPS 2 or smaller as shown in Fig. 127.4.8(F) may be used provided t_w is not less than the thickness of schedule 160 pipe of the branch size.

(C.3) integrally reinforced fittings welded directly to the run pipe when the reinforcements provided by the fitting and the deposited weld metal meets the requirements of (D) below.

(C.4) integrally reinforced extruded outlets in the run pipe. The reinforcement requirements shall be in accordance with (G) below.

(D) Branch Connections Subject to Internal Pressure Requiring Reinforcement

(D.1) Reinforcement is required when it is not provided inherently in the components of the branch connection. This paragraph gives rules covering the design of branch connections to sustain internal pressure in cases where the angle between the axes of the branch and of the run is between 45 deg and 90 deg. Subparagraph (E) below gives rules governing the design of connections to sustain external pressure.

(D.2) Figure 104.3.1(D) illustrates the notations used in the pressure-temperature design conditions of branch connections but does not illustrate the allowances for mill tolerance or any other wall thickness allowance. The designer shall make proper allowances for the effects of corrosion or erosion, threading and grooving, and mechanical strength as specified in paras. 102.4.1, 102.4.2, and 102.4.4 in order that the required minimum reinforcement is assured over the design life of the piping system. These notations are as follows:

α = angle between axes of branch and run, deg

b = subscript referring to branch

D_o = outside diameter of pipe, in. (mm)

d_1 = inside centerline longitudinal dimension of the finished branch opening in the run of the pipe, in. (mm)
= $[D_{ob} - 2(T_b - A)]/\sin \alpha$

d_2 = "half width" of reinforcing zone, in. (mm)
= the greater of d_1 or $(T_b - A) + (T_h - A) + d_1/2$ but in no case more than D_{oh}, in. (mm)

h = subscript referring to run or header

L_4 = altitude of reinforcement zone outside of run, in. (mm)
= $2.5(T_b - A) + t_r$ or $2.5(T_h - A)$, whichever is smaller

t_r = thickness of attached reinforcing pad, in Example B, in. (mm); or height of the largest 60 deg right triangle supported by the run and branch outside diameter projected

Copyright ASME International
Provided by IHS under license with ASME
No reproduction or networking permitted without license from IHS Not for Resale

surfaces and lying completely within the area of integral reinforcement, in Example C, in. (mm)

T_b, T_h = actual (by measurement), or minimum wall thickness of the branch or header pipe, in. (mm), permissible under purchase specification

t_{mb}, t_{mh} = required minimum wall thickness, in. (mm), of the branch or header pipe as determined by use of Eq. (3) or (3A) in para. 104.1.2(A)

(D.2.1) If the run pipe contains a longitudinal seam which is not intersected by the branch, the stress value of seamless pipe of comparable grade may be used to determine the value of t_{mh} for the purpose of reinforcement calculations only. If the branch intersects a longitudinal weld in the run, or if the branch contains a weld, the weld joint efficiency for either or both shall enter the calculations. If the branch and run both contain longitudinal welds, care shall be taken to ensure that the two welds do not intersect each other.

(D.2.2) The required reinforcement area in square inches (square millimeters) for branch connections shall be the quantity

$$A_7 = (t_{mh} - A)d_1\,(2 - \sin\alpha)$$

For right angle connections the required reinforcement becomes

$$A_7 = (t_{mh} - A)d_1$$

The required reinforcement must be within the limits of the reinforcement zone as defined in (D.2.4) below.

(D.2.3) The reinforcement required by (D.2) shall be that provided by any combination of areas A_1, A_2, A_3, A_4, and A_5, as defined below and illustrated in Fig. 104.3.1(D) where

A_1 = area provided by excess pipe wall in the run
= $(2d_2 - d_1)(T_h - t_{mh})$

A_2 = area, in.^{2} (mm^2), provided by excess pipe wall in the branch for a distance L_4 above the run
= $2L_4\,(T_b - t_{mb})/\sin\alpha$

A_3 = area provided by deposited weld metal beyond the outside diameter of the run and branch, and for fillet weld attachments of rings, pads, and saddles

A_4 = area provided by a reinforcing ring, pad, or integral reinforcement. The value of A_4 may be taken in the same manner in which excess header metal is considered, provided the weld completely fuses the branch pipe, run pipe, and ring or pad, or integral reinforcement. For welding branch connections refer to para. 127.4.8.

A_5 = area provided by a saddle on right angle connections
= (O.D. of saddle $- D_{ob}$)t_r

Portions of the reinforcement area may be composed of materials other than those of the run pipe, but if the allowable stress of these materials is less than that for the run pipe, the corresponding calculated reinforcement area provided by this material shall be reduced in the ratio of the allowable stress being applied to the reinforcement area. No additional credit shall be taken for materials having higher allowable stress values than the run pipe.

(D.2.4) Reinforcement Zone. The reinforcement zone is a parallelogram whose width shall extend a distance d_2 on each side of the centerline of the branch pipe, and whose altitude shall start at the inside surface of the run pipe and extend to a distance L_4 from the outside surface of the run pipe.

(D.2.5) Reinforcement of Multiple Openings. It is preferred that multiple branch openings be spaced so that their reinforcement zones do not overlap. If closer spacing is necessary, the following requirement shall be met. The two or more openings shall be reinforced in accordance with (D.2), with a combined reinforcement that has a strength equal to the combined strength of the reinforcement that would be required for the separate openings. No portion of the cross section shall be considered as applying to more than one opening, or be evaluated more than once in a combined area.

When more than two adjacent openings are to be provided with a combined reinforcement, the minimum distance between centers of any two of these openings should preferably be at least 1½ times their average diameter, and the area of reinforcement between them shall be at least equal to 50% of the total required for these two openings.

(D.2.6) Rings, Pads, and Saddles. Reinforcement provided in the form of rings, pads, or saddles shall not be appreciably narrower at the side than at the crotch.

A vent hole shall be provided at the ring, pad, or saddle to provide venting during welding and heat treatment. Refer to para. 127.4.8(E).

Rings, pads, or saddles may be made in more than one piece, provided the joints between pieces have full thickness welds, and each piece is provided with a vent hole.

(D.2.7) Other Designs. The adequacy of designs to which the reinforcement requirements of para. 104.3 cannot be applied shall be proven by burst or proof tests on scale models or on full size structures, or by calculations previously substantiated by successful service of similar design.

(E) Branch Connections Subject to External Pressure Requiring Reinforcement. The reinforcement area in square inches (square millimeters) required for branch connections subject to external pressure shall be

$$0.5t_{mh}d_1\,(2 - \sin\alpha)$$

Copyright ASME International
Provided by IHS under license with ASME
No reproduction or networking permitted without license from IHS
Not for Resale

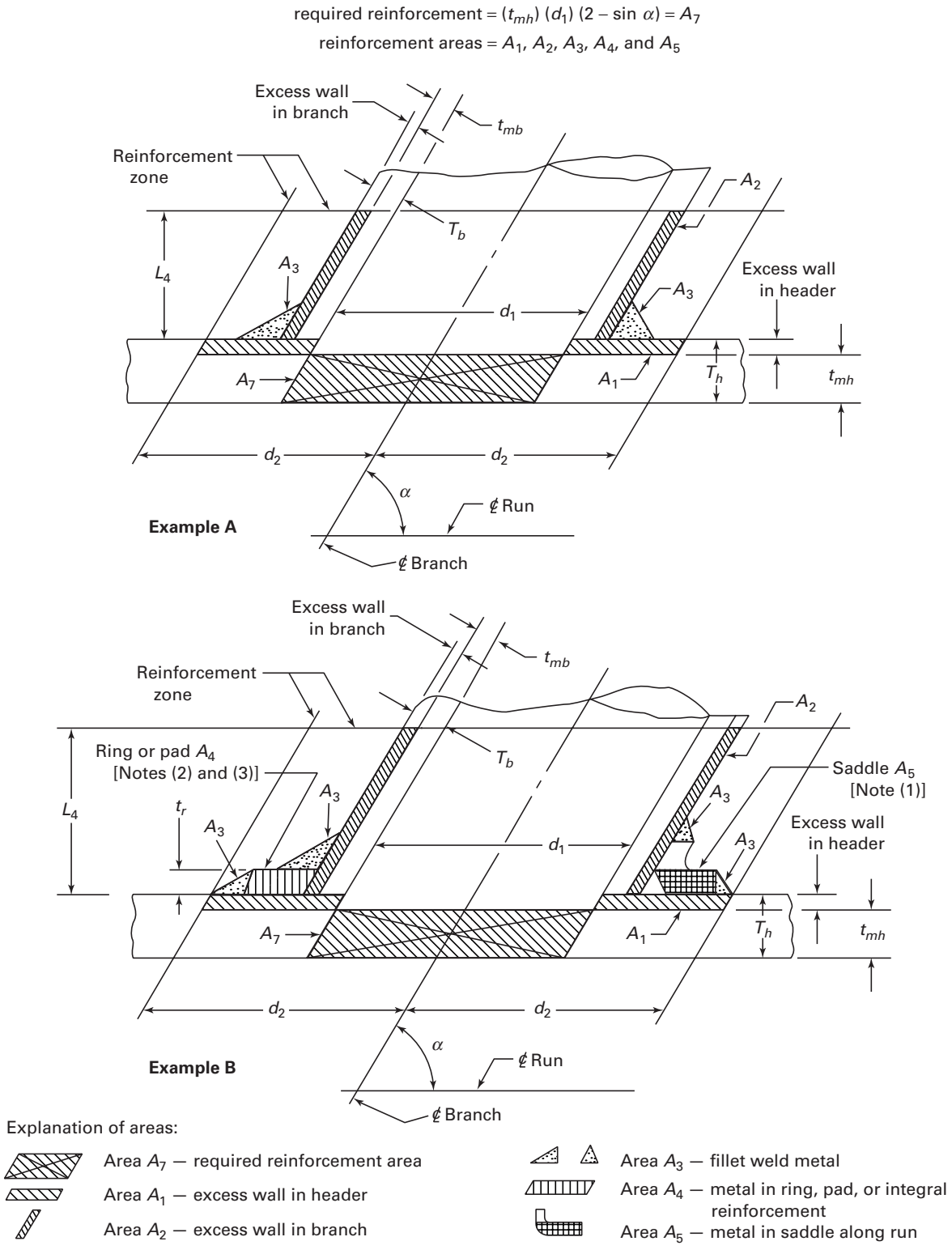

Fig. 104.3.1(D) Reinforcement of Branch Connections

Copyright ASME International
Provided by IHS under license with ASME
No reproduction or networking permitted without license from IHS
Not for Resale

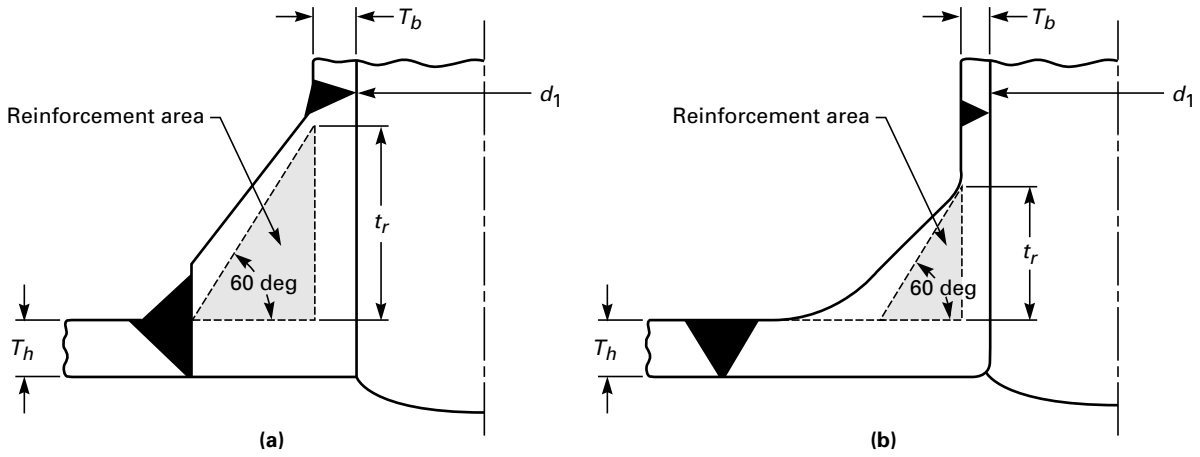

Example C

NOTES:
(1) Reinforcement saddles are limited to use on 90 deg branches (Example B).
(2) When a ring or pad is added as reinforcement (Example B), the value of reinforcement area may be taken in the same manner in which excess header metal is considered, provided the weld completely fuses the branch pipe, header pipe, and ring or pad. Typical acceptable methods of welding which meeet the above requirement are shown in Fig. 127.4.8(D), sketches (c) and (d).
(3) Width to height of rings and pads shall be reasonably proportioned, preferably on a ratio as close to 4:1 as the available horizontal space within the limits of the reinforcing zone along the run and the outside diameter of the branch will permit, but in no case may the ratio be less than 1:1.

Fig. 104.3.1(D) Reinforcement of Branch Connections (Cont'd)

Procedures established heretofore for connections subject to internal pressure shall apply for connections subject to external pressure provided that D_{oh}, D_{ob}, and t_r are reduced to compensate for external corrosion, if required by design conditions.

(F) Branch Connections Subject to External Forces and Moments. The requirements of the preceding paragraphs are intended to assure safe performance of a branch connection subjected only to pressure. However, when external forces and moments are applied to a branch connection by thermal expansion and contraction, by dead weight of piping, valves, and fittings, covering and contents, or by earth settlement, the branch connection shall be analyzed considering the stress intensification factors as specified in Appendix D. Use of ribs, gussets, and clamps designed in accordance with para. 104.3.4 is permissible to stiffen the branch connection, but their areas cannot be counted as contributing to the required reinforcement area of the branch connection.

(G) Extruded Outlets Integrally Reinforced

(G.1) The following definitions, modifications, notations, and requirements are specifically applicable to extruded outlets. The designer shall make proper wall thickness allowances in order that the required minimum reinforcement is assured over the design life of the system.

(G.2) Definition. An extruded outlet header is defined as a header in which the extruded lip at the outlet has an altitude above the surface of the run which is equal to or greater than the radius of curvature of the external contoured portion of the outlet; i.e., $h_o \geq r_o$. See nomenclature and Fig. 104.3.1(G).

(G.3) These rules apply only to cases where the axis of the outlet intersects and is perpendicular to the axis of the run. These rules do not apply to any nozzle in which additional nonintegral material is applied in the form of rings, pads, or saddles.

(G.4) The notation used herein is illustrated in Fig. 104.3.1(G). All dimensions are in inches (millimeters).

d = outside diameter of branch pipe
d_b = corroded internal diameter of branch pipe
D = outside diameter of run
d_r = corroded internal diameter of run
d_c = corroded internal diameter of extruded outlet measured at the level of the outside surface of the run
h_o = height of the extruded lip. This must be equal to or greater than r_o, except as shown in (G.4.2) below.
L_8 = altitude of reinforcement zone
$= 0.7\sqrt{dT_o}$

Copyright ASME International
Provided by IHS under license with ASME
No reproduction or networking permitted without license from IHS
Not for Resale

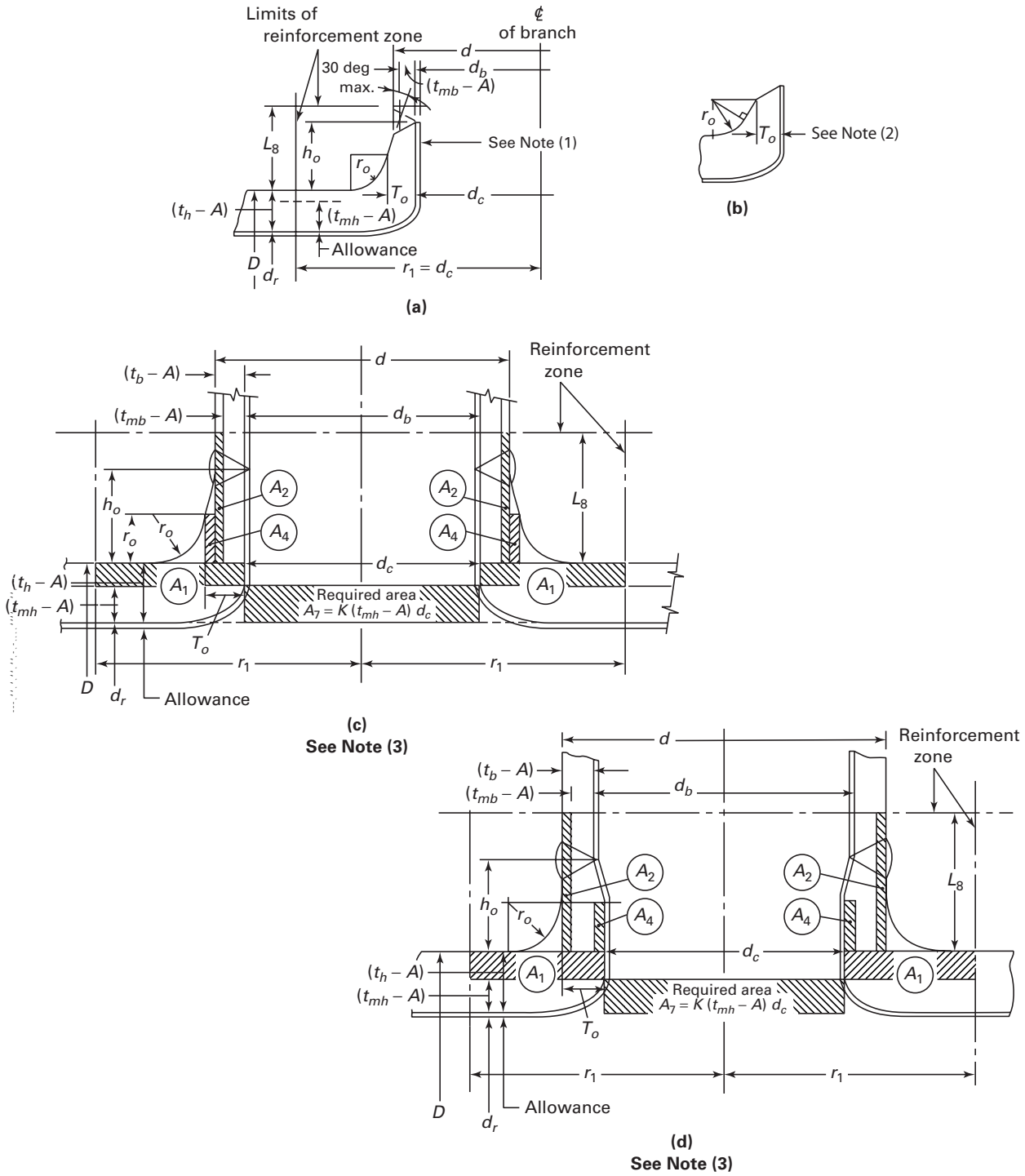

NOTES:
(1) Taper bore inside diameter (if required) to match branch pipe 1:3 maximum taper.
(2) Sketch to show method of establishing T_o when the taper encroaches on the crotch radius.
(3) Sketch is drawn for condition where $k = 1.00$.

Fig. 104.3.1(G) Reinforced Extruded Outlets

Copyright ASME International
Provided by IHS under license with ASME
No reproduction or networking permitted without license from IHS
Not for Resale

$t_{mb} - A$ = required thickness of branch pipe according to wall thickness Eq. (3) or (3A) in para. 104.1.2(A), but not including any thickness for corrosion

$t_b - A$ = actual thickness of branch wall not including corrosion allowance

$t_{mh} - A$ = required thickness of the run according to the Eq. (3) or (3A) in para. 104.1.2(A), but not including any allowance for corrosion

$t_h - A$ = actual thickness of run wall, not including the corrosion allowance

T_o = corroded finished thickness of extruded outlet measured at a height equal to r_o above the outside surface of the run

r_1 = half width of reinforcement zone (equal to d_c)

r_o = radius of curvature of external contoured portion of outlet measured in the plane containing the axes of the run and branch. This is subject to the following limitations:

(G.4.1) Minimum Radius. This dimension shall not be less than $0.05d$ except that on branch diameters larger than NPS 30, it need not exceed 1.50 in. (38 mm).

(G.4.2) Maximum Radius. For outlet pipe sizes 6 in. nominal and larger, this dimension shall not exceed $0.10d + 0.50$ in. ($0.10d$ + 12.7 mm). For outlet pipe sizes less than NPS 6, this dimension shall be not greater than 1.25 in. (32 mm).

(G.4.3) When the external contour contains more than one radius, the radius of any arc sector of approximately 45 deg shall meet the requirements of (G.4.1) and (G.4.2) above. When the external contour has a continuously varying radius, the radius of curvature at every point on the contour shall meet the requirements of (G.4.1) and (G.4.2) above.

(G.4.4) Machining other than grinding for weld cleanup shall not be employed in order to meet the above requirements.

(G.5) Required Area. The required area is defined as

$$A_7 = K\,(t_{mh} - A)\,d_c$$

where K shall be taken as follows.

For d/D greater than 0.60,

$$K = 1.00$$

For d/D greater than 0.15 and not exceeding 0.60,

$$K = 0.6 + \tfrac{2}{3}\,d/D$$

For d/D equal to or less than 0.15,

$$K = 0.70$$

The design must meet criteria that the reinforcement area defined in (G.6) below is not less than the required area.

(G.6) Reinforcement Area. The reinforcement area shall be the sum of areas

$$A_1 + A_2 + A_4$$

as defined below.

(G.6.1) Area A_1 is the area lying within the reinforcement zone resulting from any excess thickness available in the run wall.

$$A_1 = d_c(t_n - t_{mh})$$

(G.6.2) Area A_2 is the area lying within the reinforcement zone resulting from any excess thickness available in the branch pipe wall.

$$A_2 = 2L_8(t_b - t_{mb})$$

(G.6.3) Area A_4 is the area lying within the reinforcement zone resulting from excess thickness available in the extruded outlet lip.

$$A_4 = 2r_o\,[T_o - (t_b - A)]$$

(G.7) Reinforcement of Multiple Openings. It is preferred that multiple branch openings be spaced so that their reinforcement zones do not overlap. If closer spacing is necessary, the following requirements shall be met. The two or more openings shall be reinforced in accordance with (G) with a combined reinforcement that has a strength equal to the combined strength of the reinforcement that would be required for separate openings. No portion of the cross section shall be considered as applying to more than one opening, or be evaluated more than once in a combined area.

(G.8) In addition to the above, the manufacturer shall be responsible for establishing and marking on the section containing extruded outlets, the design pressure and temperature. The manufacturer's name or trademarks shall be marked on the section.

104.3.3 Miters. Miter joints, and the terminology related thereto, are described in Appendix D. A widely spaced miter with

$$\theta < 9\sqrt{\frac{t_n}{r}}\ \text{deg}$$

shall be considered to be equivalent to a girth butt-welded joint, and the rules of this paragraph do not apply. Miter joints, and fabricated pipe bends consisting of segments of straight pipe welded together, with θ equal to or greater than this calculated value may be used within the limitations described below.

(A) Pressure shall be limited to 10 psi (70 kPa) under the following conditions.

Copyright ASME International
Provided by IHS under license with ASME
No reproduction or networking permitted without license from IHS Not for Resale

(A.1) The assembly includes a miter weld with $\theta >$ 22.5 deg, or contains a segment which has a dimension

$$B < 6t_n$$

(A.2) The thickness of each segment of the miter is not less than that determined in accordance with para. 104.1.

(A.3) The contained fluid is nonflammable, nontoxic, and incompressible, except for gaseous vents to atmosphere.

(A.4) The number of full pressure cycles is less than 7,000 during the expected lifetime of the piping system.

(A.5) Full penetration welds are used in joining miter segments.

(B) Pressure shall be limited to 100 psi (700 kPa) under the conditions defined in (A.2), (A.3), (A.4), and (A.5) above, in addition to the following:

(B.1) the angle θ does not exceed 22.5 deg

(B.2) the assembly does not contain any segment which has a dimension

$$B < 6t_n$$

(C) Miters to be used in other services or at design pressures above 100 psi (700 kPa) shall meet the requirements of para. 104.7.

(C.1) When justification under para. 104.7 is based on comparable service conditions, such conditions must be established as comparable with respect to cyclic as well as static loadings.

(C.2) When justification under para. 104.7 is based on an analysis, that analysis and substantiating tests shall consider the discontinuity stresses which exist at the juncture between segments; both for static (including brittle fracture) and cyclic internal pressure.

(C.3) The wall thickness t_s of a segment of a miter shall not be less than specified in (C.3.1) or (C.3.2) below, depending on the spacing.

(C.3.1) For closely-spaced miter bends (see Appendix D for definition)

$$t_s = t_m \frac{2 - r/R}{2(1 - r/R)}$$

(C.3.2) For widely-spaced miters (see Appendix D for definition)

$$t_s = t_m(1 + 0.64\sqrt{r/t_s}\tan\theta)$$

(the above equation requires an iterative or quadratic solution for t_s).

104.3.4 Attachments. External and internal attachments to piping shall be designed so as not to cause flattening of the pipe, excessive localized bending stresses, or harmful thermal gradients in the pipe wall. It is important that such attachments be designed to minimize stress concentrations in applications where the number of stress cycles, due either to pressure or thermal effect, is relatively large for the expected life of the equipment.

104.4 Closures

104.4.1 General. Closures for power piping systems shall meet the applicable requirements of this Code and shall comply with the requirements described in (A) or (B) below. Closures may be made

(A) by use of closure fittings, such as threaded or welded plugs, caps, or blind flanges, manufactured in accordance with standards listed in Table 126.1, and used within the specified pressure-temperature ratings, or

(B) in accordance with the rules contained in the ASME Boiler and Pressure Vessel Code, Section I, Power Boilers, PG-31, or Section VIII, Pressure Vessels, Division 1, UG-34 and UW-13, calculated from

$$t_m = t + A$$

where

t = pressure design thickness, calculated for the given closure shape and direction of loading using appropriate equations and procedures in Section I or Section VIII, Division 1 of the ASME Boiler and Pressure Vessel Code

The definition of A and the symbols used in determining t shall have the definitions shown herein, instead of those given in the ASME Boiler and Pressure Vessel Code.

Attachment of a welded flat permanent closure with only a single fillet weld is not permitted.

104.4.2 Openings in Closures. Openings in closures may be made by welding, extruding, or threading. Attachment to the closure shall be in accordance with the limitations provided for such connections in para. 104.3.1 for branch connections. If the size of the opening is greater than one-half of the inside diameter of the closure, the opening shall be designed as a reducer in accordance with para. 104.6.

Other openings in closures shall be reinforced in accordance with the requirements of reinforcement for a branch connection. The total cross-sectional area required for reinforcement in any plane passing through the center of the opening and normal to the surface of the closure shall not be less than the quantity of d_5t, where

d_5 = diameter of the finished opening, in. (mm), and t as defined in (B) above

104.5 Pressure Design of Flanges and Blanks

104.5.1 Flanges — General

(A) Flanges of sizes NPS 24 and smaller, that are manufactured in accordance with ASME B16.1 and B16.5,

Copyright ASME International
Provided by IHS under license with ASME
No reproduction or networking permitted without license from IHS Not for Resale

shall be considered suitable for use at the primary service ratings (allowable pressure at service temperature) except the slip-on flanges to ASME B16.5 shall be limited in application to no higher than Class 300 primary pressure service rating. Refer to para. 127.4.4.

For flanges larger than NPS 24, and manufactured in accordance with the Specifications and Standards listed in Table 126.1, the designer is cautioned about the dimensionally different designs that are available, as well as the limitations of their application.

Flanges not made in accordance with the Specifications and Standards listed in Table 126.1 shall be designed in accordance with Section VIII, Division 1 of the ASME Boiler and Pressure Vessel Code, except that the requirements for fabrication, assembly, inspection, and testing, and the pressure and temperature limits for materials of this Code for Pressure Piping shall govern. Certain notations used in the ASME Code, namely, P, S_a, S_b, and S_f, shall have the meanings described below instead of those given in the ASME Code. All other notations shall be as defined in the ASME Code.

P = design pressure, psi (kPa) (see paras. 101.2.2 and 101.2.4)

S_a = bolt design stress at atmospheric temperature, psi (kPa)

S_b = bolt design stress at design temperature, psi (kPa)

S_f = allowable stress for flange material or pipe, psi (kPa) (see para. 102.3.1 and Allowable Stress Tables) (stress values converted from MPa to kPa)

For certain specific applications see the limitations of paras. 122.1.1(F), (G), and (H).

(B) These flange design rules are not applicable to flat face designs employing full face gaskets that extend beyond the bolts.

(C) The bolt design stress in (A) above shall be as established in Section VIII, Division 1 of the ASME Boiler and Pressure Vessel Code, Appendix P for ferrous materials.

(D) Application of bolting materials for flanged joints is covered in para. 108.5.

104.5.2 Blind Flanges

(A) Blind flanges manufactured in accordance with the standards listed in Table 126.1 shall be considered suitable for use at the pressure-temperature rating specified by such Standards.

(B) The required thickness of blind flanges not manufactured in accordance with standards in Table 126.1 shall be calculated from Eq. (6).

$$t_m = t + A \tag{6}$$

where

t = pressure design thickness as calculated for the given style of blind flange from the appropriate equations for bolted flat cover plates in Section I of the ASME Boiler and Pressure Vessel Code. Certain notations used in these equations, namely, P and SE [see para. 104.1.2(A), footnote 1], shall be considered to have the meanings described in para. 104.1.2(A) instead of those given in the ASME Code. All other notations shall be as defined in the ASME Code.

104.5.3 Blanks

(A) The required thickness of permanent blanks (see Fig. 104.5.3) shall be calculated from the equation

$$t_m = t + A$$

where

t = pressure design thickness as calculated from Eq. (7)

$$d_6\sqrt{\frac{3P}{16SE}} \tag{7}$$

See para. 104.1.2(A), footnote 1.

d_6 = inside diameter of gasket for raised or flat (plain) face flanges, or the gasket pitch diameter for retained gasketed flanges, in. (mm)

(B) Blanks to be used for test purposes only shall have a minimum thickness not less than the pressure design thickness t specified above except that P shall be not less than the test pressure and SE [see para. 104.1.2(A), footnote 1] may be taken as the specified minimum yield strength of the blank material if the test fluid is incompressible.

(C) Attachment of a welded flat permanent blank with only a single fillet weld is not permitted.

104.6 Reducers

Flanged reducer fittings manufactured in accordance with the Standards listed in Table 126.1 shall be considered suitable for use at the specified pressure-temperature ratings. Where butt welding reducers are made to a nominal pipe thickness, the reducers shall be considered suitable for use with pipe of the same nominal thickness.

104.7 Other Pressure-Containing Components

104.7.1 Pressure-containing components manufactured in accordance with the standards listed in Table 126.1 shall be considered suitable for use under normal operating conditions at or below the specified pressure-temperature ratings. However, the user is cautioned that where certain standards or manufacturers may impose more restrictive allowances for variation from normal operation than those established by this Code, the more restrictive allowances shall apply.

104.7.2 Specially Designed Components. The pressure design of components not covered by the standards listed in Table 126.1 or for which design formulas and procedures are not given in this Code shall be based on

Copyright ASME International
Provided by IHS under license with ASME
No reproduction or networking permitted without license from IHS Not for Resale

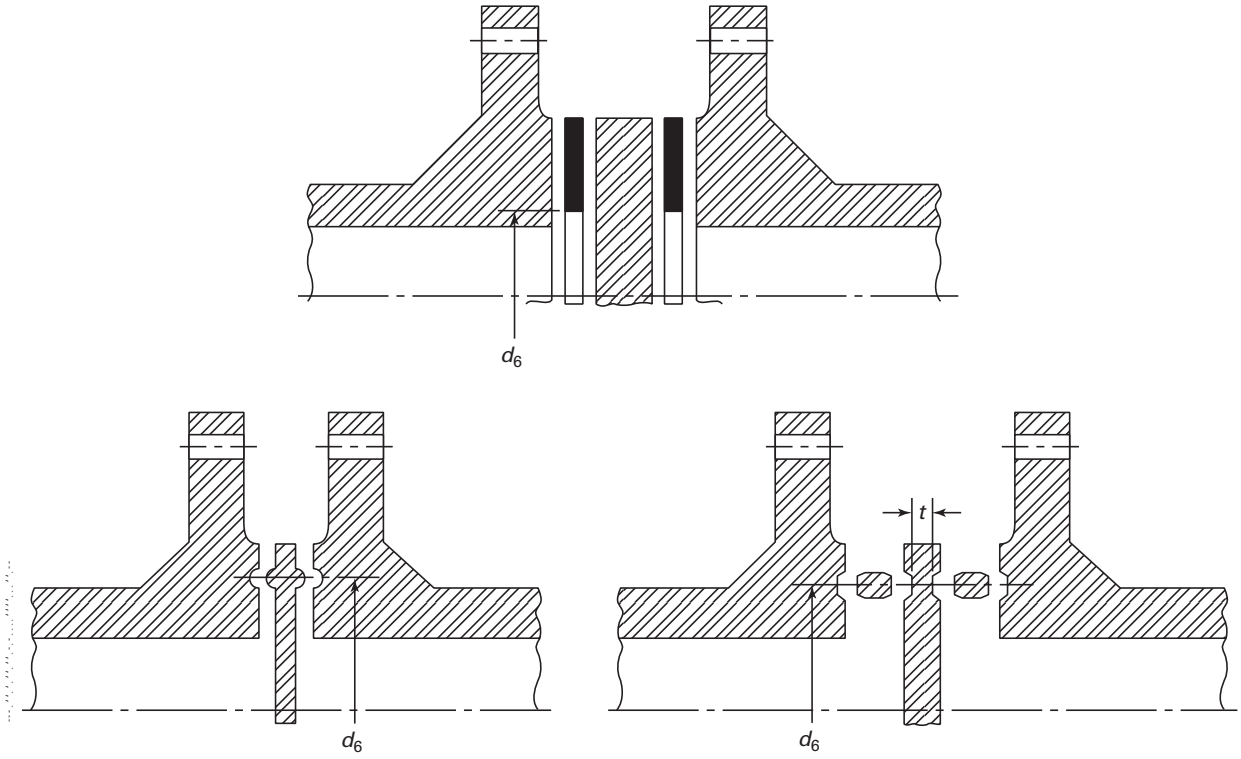

Fig. 104.5.3 Types of Permanent Blanks

calculations consistent with the design criteria of this Code. These calculations shall be substantiated by one or more of the means stated in (A), (B), (C), and (D) below.

(A) extensive, successful service experience under comparable conditions with similarly proportioned components of the same or similar material

(B) experimental stress analysis, such as described in the ASME Boiler and Pressure Vessel Code, Section VIII, Division 2, Appendix 6

(C) proof test in accordance with either ASME B16.9, MSS SP-97, or the ASME Boiler and Pressure Vessel Code, Section I. A-22

(D) detailed stress analysis, such as finite element method, in accordance with the ASME Boiler and Pressure Vessel Code, Division 2, Appendix 4, except that the basic material allowable stress from the Allowable Stress Tables of Appendix A shall be used in place of S_m

For any of (A) through (D) above, it is permissible to interpolate between sizes, wall thicknesses, and pressure classes and to determine analogies among related materials.

Calculations and documentation showing compliance with this paragraph shall be available for the owner's approval, and, for boiler external piping, they shall be available for the Authorized Inspector's review.

104.8 Analysis of Piping Components

To validate a design under the rules in this paragraph, the complete piping system must be analyzed between anchors for the effects of thermal expansion, weight, other sustained loads, and other occasional loads. Each component in the system must meet the limits in this paragraph. For pipe and fittings, the pressure term in Eqs. (11) and (12) may be replaced with the alternative term for S_{lp} as defined in para. 102.3.2(D). The pressure term in Eqs. (11) and (12) may not apply for bellows and expansion joints. When evaluating stresses in the vicinity of expansion joints, consideration must be given to actual cross-sectional areas that exist at the expansion joint.

104.8.1 Stress Due to Sustained Loads. The effects of pressure, weight, and other sustained mechanical loads shall meet the requirements of Eq. (11).

U.S. Customary Units

$$S_L = \frac{PD_o}{4t_n} + \frac{0.75\ iM_A}{Z} \le 1.0\ S_h \qquad (11A)$$

SI Units

$$S_L = \frac{PD_o}{4t_n} + \frac{1{,}000\ (0.75i)M_A}{Z} \le 1.0\ S_h \qquad (11B)$$

Copyright ASME International
Provided by IHS under license with ASME
No reproduction or networking permitted without license from IHS
Not for Resale

where

M_A = resultant moment loading on cross section due to weight and other sustained loads, in-lb (mm-N) (see para. 104.8.4)

Z = section modulus, in.^{3} (mm^3) (see para. 104.8.4)

i = stress intensification factor (see Appendix D). The product $0.75i$ shall never be taken as less than 1.0.

S_L = sum of the longitudinal stresses due to pressure, weight, and other sustained loads

104.8.2 Stress Due to Occasional Loads. The effects of pressure, weight, other sustained loads, and occasional loads including earthquake shall meet the requirements of Eq. (12).

U.S. Customary Units

$$\frac{PD_o}{4t_n} + \frac{0.75iM_A}{Z} + \frac{0.75iM_B}{Z} \le k\,S_h \qquad (12A)$$

SI Units

$$\frac{PD_o}{4t_n} + \frac{1000(0.75i)M_A}{Z} + \frac{1000(0.75i)M_B}{Z} \le k\,S_h \qquad (12B)$$

Terms same as para. 104.8.1 except

k = 1.15 for occasional loads acting for no more than 8 hr at any one time and no more than 800 hr/year [see para. 102.3.3(A)]

k = 1.2 for occasional loads acting for no more than 1 hr at any one time and no more than 80 hr/year [see para. 102.3.3(A)]

M_B = resultant moment loading on cross section due to occasional loads [see para. 102.3.3(A)], such as thrusts from relief/safety valve loads, from pressure and flow transients, and earthquake, in.-lb (mm·N). If calculation of moments due to earthquake is required, use only one-half the earthquake moment range. Effects of anchor displacement due to earthquake may be excluded from Eq. (12) if they are included in Eq. (13), in.-lb.

104.8.3 Thermal Expansion Stress Range. The effects of thermal expansion shall meet the requirements of Eq. (13).

English units

$$S_E = \frac{iM_C}{Z} \le S_A + f(S_h - S_L) \qquad (13A)$$

Metric units

$$S_E = \frac{1000(iM_c)}{Z} \le S_A + f(S_h - S_L) \qquad (13B)$$

Terms same as para. 104.8.1 except

M_C = range of resultant moments due to thermal expansion, in.-lb (mm·N). Also include moments effects of anchor displacement due to earthquake if anchor displacement effects were omitted from Eq. (12) (see para. 104.8.4).

f = stress range reduction factor for cyclic conditions for total number N of full temperature cycles over total number of years during which system is expected to be in operation, from Table 102.3.2(C)

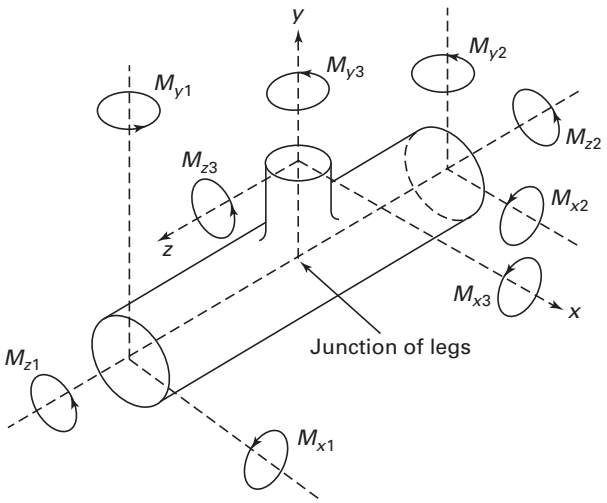

Fig. 104.8.4

104.8.4 Moments and Section Modulus

(A) For purposes of Eqs. (11), (12), and (13), the resultant moments for straight through components, curved pipe, or welding elbows may be calculated as follows:

$$M_j = (M_{xj}^2 + M_{yj}^2 + M_{zj}^2)^{1/2}$$

where

j = A, B, or C as defined in paras. 104.8.1, 104.8.2, and 104.8.3

Z = section modulus of piping, in.^{3} (mm^3)

(B) For full outlet branch connections, calculate the resultant moment of each leg separately in accordance with (A) above. Use Z, section modulus, in Eqs. (11) through (13) as applicable to branch or run pipe. Moments are taken at the junction point of the legs. See Fig. 104.8.4.

(C) For reduced outlets, calculate the resultant moment of each leg separately in accordance with (A) above. Moments are to be taken at the junction point of the legs, unless the designer can demonstrate the validity of a less conservative method. See Fig. 104.8.4. For the *reduced outlet branch*, except for branch connections covered by Fig. D-1:

$$M_A, M_B, M_C = \sqrt{M_{x3}^2 + M_{y3}^2 + M_{z3}^2}$$

and

Copyright ASME International
Provided by IHS under license with ASME
No reproduction or networking permitted without license from IHS
Not for Resale

$Z = \pi r_b^2 t_e$
(effective section modulus)
r_b = branch mean cross-sectional radius, in. (mm)
t_e = effective branch wall thickness, in. (mm)
= lesser of t_{nh} or it_{nb} in Eq. (13) or lesser of t_{nh} or $0.75it_{nb}$, where $0.75i \geq 1.0$, in Eqs. (11) and (12)

For the *reduced outlet branch connections covered by Fig. D-1:*

$$M_A, M_B, M_C = \sqrt{M_{x3}^2 + M_{y3}^2 + M_{z3}^2}$$

and

$$Z = \pi r'^2_m T_b$$

If L_1 in Fig. D-1 sketches (a), (b), and (c) equals or exceeds $0.5\sqrt{r_i T_b}$, then r'_m can be taken as the radius to the center of T_b when calculating the section modulus and the stress intensification factor. For such a case the transition between branch pipe and nozzle must be evaluated separately from the branch connection.

For the *main run outlets:*

$$M_A, M_B, M_C = \sqrt{M_{x1}^2 + M_{y1}^2 + M_{z1}^2}$$

and

$$M_A, M_B, M_C = \sqrt{M_{x2}^2 + M_{y2}^2 + M_{z2}^2}$$

and

Z = section modulus of pipe, in.^{3} (mm^3)

PART 3
SELECTION AND LIMITATIONS OF PIPING COMPONENTS

105 PIPE

105.1 General

Pipe conforming to the standards and specifications listed in Appendix A shall be used within the range of temperatures for which allowable stresses are given within the limitations specified herein.

105.2 Metallic Pipe

105.2.1 Ferrous Pipe

(A) Furnace butt welded steel pipe shall not be used for flammable, combustible or toxic fluids.

(B) Ductile iron pipe may be used for design pressures within the ratings established by the standards and specifications listed in Tables 126.1 and A-5 and Notes thereto, and the limitations herein and in para. 124.6. Ductile iron pipe shall not be used for flammable, combustible, or toxic fluids. Temperature limits for the use of ductile iron pipe are often determined by the type of elastomeric gasket used in the pipe joints, or the lining material used on the internal surface of the pipe. It is the reponsibility of the Designer to determine whether these components are suitable for use in the particular application being considered. See para. 106.1(E).

105.2.2 Nonferrous Pipe

(A) Copper and brass pipe for water and steam service may be used for design pressures up to 250 psi (1 750 kPa) and for design temperatures to 406°F (208°C).

(B) Copper and brass pipe for air may be used in accordance with the allowable stresses given in the Allowable Stress Tables.

(C) Copper tubing may be used for dead-end instrument service with the limitations stated in para. 122.3.2(D).

(D) Copper, copper alloy, or aluminum alloy pipe or tube may be used under the conditions stated in para. 124.7. Copper, copper alloy, or aluminum pipe or tube shall not be used for flammable, combustible, or toxic fluids except as permitted in paras. 122.7 and 122.8.

105.3 Nonmetallic Pipe

(A) Plastic pipe may be used for water and nonflammable liquids where experience or tests have demonstrated that the plastic pipe is suitable for the service conditions, and the pressure and temperature conditions are within the manufacturer's recommendations. Until such time as mandatory rules are established for these materials, pressure shall be limited to 150 psi (1 000 kPa) and temperature to 140°F (60°C) for water service. Pressure and temperature limits for other services shall be based on the hazards involved, but in no application shall they exceed 150 psi (1 000 kPa) and 140°F (60°C). For nonmandatory rules for nonmetallic piping, see Appendix III of this Code.

(B) Reinforced thermosetting resin pipe may be used, in addition to the services listed in para. 105.3(A), in buried flammable and combustible liquid service subject to the limitations described in para. 122.7.3(F).

(C) Reinforced concrete pipe may be used in accordance with the specifications listed in Table 126.1 for water service up to 150°F (65°C).

(D) A flexible nonmetallic pipe or tube assembly may be used in applications where

(a) satisfactory service experience exists

(b) the pressure and temperature conditions are within the manufacturer's recommendations

(c) the conditions described in paras. 104.7, 124.7, and 124.9 are met

(E) Polyethylene pipe may be used, in addition to the service listed in para. 105.3(A), in buried flammable and combustible liquid and gas service subject to the

Copyright ASME International
Provided by IHS under license with ASME
No reproduction or networking permitted without license from IHS
Not for Resale

limitations described in paras. 122.7.2(D) and 122.8.1(B.4).

(F) Metallic piping lined with nonmetals may be used for fluids which would corrode or be contaminated by unprotected metal. See para. 122.9 and Appendix III.

106 FITTINGS, BENDS, AND INTERSECTIONS

106.1 Fittings

(A) Threaded, flanged, grooved and shouldered socket-welding, buttwelding, compression, push-on, mechanical gland, and solder-joint fittings made in accordance with the applicable standards in Table 126.1 may be used in power piping systems within the material, size, pressure, and temperature limitations of those standards, and within any further limitations specified in this Code. Material for fittings in flammable, combustible, or toxic fluid systems shall in addition conform to the requirements of paras. 122.7 and 122.8.

(B) Fittings not covered by the Standards listed in Table 126.1 may be used if they conform to para. 104.7.

(04) *(C)* Cast buttwelding steel fittings not covered by the dimensional standards listed in Table 126.1 may be used up to the manufacturer's pressure and temperature ratings, provided they are radiographed in accordance with the method of ASTM E 94 and meet the acceptance requirements of ASTM E 446, E 186, and E 280 as applicable for the thickness being radiographed.

(D) Fabricated ends for grooved and shouldered type joints are acceptable, provided they are attached by full penetration welds, double fillet welds, or by threading. Fabricated ends attached by single fillet welds are not acceptable.

(E) Elastomeric gasket bell end fittings complying with applicable standards listed in Table 126.1 may be used for water service. Temperature limits for gray and ductile iron fittings using ANSI/AWWA C111/A21.11 joints are 65°C (150°F) for push-on joints and 49°C (120°F) for mechanical joints, based on standard water service gasket and lining materials. Fittings of this type using alternative materials, as allowed by AWWA C111, may be used for nonflammable, nontoxic service to 100°C (212°F), where suitability for the fluid and operating conditions has been established by test or experience. Temperature liimts for bell and spigot fittings in nonmetallic pipe shall be per para. 105.3.

106.2 Bends and Intersections

Bends and extruded branch connections may be used when designed in accordance with the provisions of paras. 104.2 and 104.3, respectively. Miters may be used within the limitations of para. 104.3.3.

106.3 Pipe Couplings

(A) Cast iron and malleable iron pipe couplings shall be limited in application as referenced in paras. 124.4 and 124.5, respectively.

(B) Straight thread couplings shall not be used.

106.4 Flexible Metal Hose Assembly

(A) Flexible metal hose assemblies may be used to provide flexibility in a piping system, to isolate or control vibration, or to compensate for misalignment. The design conditions shall be in accordance with para. 101 and within the limitations of the assembly as recommended by the manufacturer. The basis for their application shall include the following service conditions: thermal cycling, bend radius, cycle life, and the possibility of corrosion and erosion. Installation shall be limited to a single-plane bend, free from any torsion effects during service conditions and nonoperating periods. Type of end-connector components shall be consistent with the requirements of this Code.

(B) A flexible metal hose assembly, consisting of one continuous length of seamless or butt welded tube with helical or annular corrugations, is not limited as to application in piping systems that are within the scope of this Code, provided that the conditions described in (A) above are met. For application subject to internal pressure the flexible element shall be contained within one or more separate layers of braided metal permanently attached at both coupling ends by welding or brazing. For application in toxic fluid systems, it is recommended that the designer also review the standards published by the relevant fluid industry for any additional safety and materials requirements that may be necessary.

(C) A flexible metal hose assembly consisting of wound interlocking metal strips may be applied to atmospheric vent systems only and shall not be used in systems which convey high temperature, flammable, toxic, or searching-type fluids. Where applicable, as determined by the designer and within the limitations described in para. 122.6 and those imposed by the manufacturer, this type of hose assembly may be used at pressure relieving devices.

107 VALVES

107.1 General

(A) Valves complying with the standards and specifications listed in Table 126.1 shall be used within the specified pressure-temperature ratings.

(B) Valves not complying with (A) above shall be of a design, or equal to the design, which the manufacturer recommends for the service as stipulated in para. 102.2.2.

(C) Some valves are capable of sealing simultaneously against a pressure differential between an internal cavity

Copyright ASME International
Provided by IHS under license with ASME
No reproduction or networking permitted without license from IHS
Not for Resale

of the valve and the adjacent pipe in both directions. Where liquid is entrapped in such a valve and is subsequently heated, a dangerous rise in pressure can result. Where this condition is possible, the Owner shall provide means in design, installation, and/or operation to assure that the pressure in the valve shall not exceed the rated pressure for the attained temperature. A relief device used solely for the over-pressure protection from such entrapped fluid and conforming to (A) or (B) above need not comply with the requirements of para. 107.8. Any penetration of the pressure retaining wall of the valve shall meet the requirements of this Code.

(D) Only valves designed such that the valve stem is retained from blow-out by an assembly which functions independently of the stem seal retainer shall be used.

(E) Materials used for pressure retention for valves in flammable, combustible, or toxic fluid systems shall in addition conform to the requirements of paras. 122.7 and 122.8.

107.2 Marking

Each valve shall bear the manufacturer's name or trademark and reference symbol to indicate the service conditions for which the manufacturer guarantees the valve. The marking shall be in accordance with ASME B16.5 and B16.34.

107.3 Ends

Valves may be used with flanged, threaded, butt welding, socket welding, or other ends in accordance with applicable standards as specified in para. 107.1(A).

107.4 Stem Threads

Stem threads of valves may be internal or external with reference to the valve bonnet. Outside screw and yoke design shall be used for valves NPS 3 and larger for pressures above 600 psi (4 150 kPa).

107.5 Bonnet Joints

Bonnet joints may be of flanged, welded, pressure seal, union type, or other design, except that screwed bonnet connections in which the seal depends on a steam tight threaded joint shall not be permitted as source valves in steam service at pressures above 250 psi (1 750 kPa).

107.6 Bypasses

Sizes of bypasses shall be in accordance with MSS SP-45 as a minimum standard. Pipe for bypasses shall be at least schedule 80 seamless, and of a material of the same nominal chemical composition and physical properties as that used for the main line. Bypasses may be integral or attached.

107.8 Safety, Safety Relief, and Relief Valves

107.8.1 General. Safety, safety relief, and relief valves shall conform to the requirements specified in this Code for flanges, valves, and fittings for the pressures and temperatures to which they may be subjected.

107.8.2 Safety, Safety Relief, and Relief Valves on Boiler External Piping. Safety, safety relief, and relief valves on boiler external piping shall be in accordance with para. 122.1.7(D.1) of this Code.

107.8.3 Safety, Safety Relief, and Relief Valves on Nonboiler External Piping. Safety, safety relief, and relief valves on nonboiler external piping (except for reheat safety valves) shall be in accordance with the requirements of the ASME Boiler and Pressure Vessel Code, Section VIII, Division 1, UG-126 through UG-133. Reheat safety valves shall be in accordance with the requirements of the ASME Boiler and Pressure Vessel Code, Section I, PG-67 through PG-73.

107.8.4 Nonmandatory Appendix. For nonmandatory rules for the design of safety valve installations, see Appendix II of this Code.

108 PIPE FLANGES, BLANKS, FLANGE FACINGS, GASKETS, AND BOLTING

108.1 Flanges

Flanges shall conform to the design requirements of para. 104.5.1 or to the standards listed in Table 126.1. They may be integral or shall be attached to pipe by threading, welding, brazing, or other means within the applicable standards specified in Table 126.1.

108.2 Blanks

Blanks shall conform to the design requirements of para. 104.5.3.

108.3 Flange Facings

Flange facings shall be in accordance with the applicable standards listed in Tables 112 and 126.1. When bolting Class 150 standard steel flanges to flat face cast iron flanges, the steel flange shall be furnished with a flat face. Steel flanges of Class 300 raised face standard may be bolted to Class 250 raised face cast iron.

108.4 Gaskets

Gaskets shall be made of materials which are not injuriously affected by the fluid or by temperature. They shall be in accordance with Table 112.

108.5 U.S. Customary Bolting

108.5.1 General

(A) Bolts, bolt studs, nuts, and washers shall comply with applicable standards and specifications listed in Tables 112 and 126.1. Bolts and bolt studs shall extend completely through the nuts.

(B) Washers, when used under nuts, shall be of forged or rolled material with steel washers being used under

Copyright ASME International
Provided by IHS under license with ASME
No reproduction or networking permitted without license from IHS
Not for Resale

steel nuts and bronze washers under bronze nuts.

(C) Nuts shall be provided in accordance with the requirements of the specification for the bolts and bolt studs.

(D) Alloy steel bolt studs shall be either threaded full length or provided with reduced shanks of a diameter not less than that at the root of the threads. They shall have ASME heavy hexagonal nuts. Headed alloy bolts shall not be used with other than steel or stainless steel flanges.

(E) All alloy steel bolt studs and carbon steel bolts or bolt studs and accompanying nuts shall be threaded in accordance with ASME B1.1 Class 2A for external threads and Class 2B for internal threads. Threads shall be the coarse-thread series except that alloy steel bolting $1\frac{1}{8}$ in. and larger in diameter shall be the 8-pitch-thread series.

(F) Carbon steel headed bolts shall have square, hex, or heavy hex heads (ANSI B18.2.1) and shall be used with hex or heavy hex nuts (ASME B18.2.2). For bolt sizes smaller than $\frac{3}{4}$ in., square or heavy hex heads and heavy hex nuts are recommended. For bolt sizes larger than $1\frac{1}{2}$ in., bolt studs with a hex or heavy hex nut on each end are recommended. For cast iron or bronze flanges using $\frac{3}{4}$ in. and larger carbon steel headed bolts, square nuts may be used.

108.5.2 For the various combinations of flange materials, the selection of bolting materials and related rules concerning flange faces and gaskets shall be in accordance with para. 108 and Table 112.

108.5.3 Bolting requirements for components not covered by para. 108.5.2 shall be in accordance with para. 102.2.2

108.6 Metric Bolting

108.6.1 General. The use of metric bolts, bolt studs, nuts, and washers shall conform to the general requirements of para. 108.5, but the following are allowed:

(A) Threads shall be in accordance with ASME B1.13M, M profile, with tolerance Class 6g for external threads and Class 6H for internal threads.

(B) Threads shall be the coarse-thread series for size M68 and smaller, and 6 mm fine-pitch for M70 and larger sizes, except that alloy steel bolting M30 and larger shall be the 3 mm fine-pitch.

(C) Nuts shall be heavy hex in accordance with ASME B18.2.4.6M. Headed bolts shall be either hex or heavy hex in accordance with ASME B18.2.3.5M and B18.2.3.6M, respectively. Heavy hex heads are recommended for headed bolt sizes M18 and smaller.

(D) Bolt studs are recommended in lieu of headed bolts for sizes M39 and larger.

108.6.2 Responsibilities When Specifying or Allowing Metric Bolting

(A) The piping designer is responsible for specifying the metric bolt size to be used with each class and size of flange.

(B) The designer shall ensure that the selected metric size will fit within the flange bolt holes, and that adequate space exists for bolt heads, nuts, and the assembly tool.

(C) In those instances where the selected metric bolt size is smaller in root thread area than the corresponding U.S. Customary size, the designer shall ensure that the selected size is capable of the required assembly torque and of producing the required gasket loading to adequately seal at design pressure. Further, the designer shall ensure sufficient contact area exists between the flange metal and both the nut and bolt head to withstand the required bolt loading. If not, larger bolting or a higher flange class shall be selected.

PART 4
SELECTION AND LIMITATIONS OF PIPING JOINTS

110 PIPING JOINTS

The type of piping joint used shall be suitable for the design conditions and shall be selected with consideration of joint tightness, mechanical strength, and the nature of the fluid handled.

111 WELDED JOINTS

111.1 General

Welded joints may be used in any materials allowed by this Code for which it is possible to qualify WPSs, welders, and welding operators in conformance with the rules established in Chapter V.

All welds shall be made in accordance with the applicable requirements of Chapter V.

111.2 Butt Welds

111.2.1 Design of Butt Welds. The design of butt welds shall include the evaluation of any expected joint misalignment [para. 127.3(C)], which may result from specification of joint geometries at variance with the recommendations of this Code.

111.2.2 Backing Rings for Butt Welds. If backing rings are used in services where their presence will result in severe corrosion or erosion, the backing ring shall be removed and the internal surface ground smooth. In such services, where it is impractical to remove the backing ring, consideration shall be given to welding the joint without a backing ring, or with a consumable type insert ring.

Copyright ASME International
Provided by IHS under license with ASME
No reproduction or networking permitted without license from IHS
Not for Resale

111.3 Socket Welds

111.3.1 Restrictions on size of socket welded components are given in paras. 104.3.1(B.4), 122.1.1(H), and 122.8.2(C). Special consideration should be given to further restricting the use of socket welded piping joints where temperature or pressure cycling or severe vibration is expected to occur or where the service may accelerate crevice corrosion.

111.3.2 Dimensions for sockets of socket welding components shall conform to ASME B16.5 for flanges and ASME B16.11 for fittings. Assembly of socket welded joints shall be made in accordance with para. 127.3(E).

111.3.3 A branch connection socket welded directly into the wall of the run pipe shall be in accordance with requirements of para. 104.3.1(B.4).

111.3.4 Drains and bypasses may be attached to a fitting or valve by socket welding, provided the socket depth, bore diameter, and shoulder thickness conform to the requirements of ASME B16.11.

111.4 Fillet Welds

Fillet welds shall have dimensions not less than the minimum dimensions shown in Figs. 127.4.4(B), 127.4.4(C), and 127.4.8(D).

111.5 Seal Welds

Seal welding of connections, including threaded joints, may be used to avoid joint leakage but the welding shall not be considered as contributing any strength to the joint. Also see para. 127.4.5. Seal welded threaded joints are subject to the limitations of para. 114.

112 FLANGED JOINTS

Flanged joints shall conform to paras. 108 and 110 and Table 112.

113 EXPANDED OR ROLLED JOINTS

Expanded or rolled joints may be used where experience or test has demonstrated that the joint is suitable for the design conditions and where adequate provisions are made to prevent separation of the joint.

114 THREADED JOINTS

Threaded joints may be used within the limitations specified in para. 106 and within the other limitations specified herein.

114.1

All threads on piping components shall be taper pipe threads in accordance with the applicable Standards listed in Table 126.1. Threads other than taper pipe threads may be used for piping components where tightness of the joint depends on a seal weld or a seating surface other than the threads, and where experience or test has demonstrated that such threads are suitable.

114.2.1 Threaded joints shall not be used where severe erosion, crevice corrosion, shock, or vibration is expected to occur, nor at temperatures over 925°F (495°C). Size limits for steam and hot water service [above 220°F (105°C)] shall be as listed in Table 114.2.1.

114.2.2 Threaded access holes with plugs, which serve as openings for radiographic inspection of welds, are not subject to the limitations of para. 114.2.1 and Table 114.2.1, provided their design and installation meets the requirement of para. 114.1. A representative type of access hole and plug is shown in PFI ES-16.

114.2.3 Threaded connections for insertion type fluid temperature determination, flow measurement, and sampling devices are not subject to the temperature limitation stated in para. 114.2.1 nor the pressure limitations stated in Table 114.2.1 provided that design and installation meet the requirements of paras. 104.3.1 and 114.1. At temperatures greater than 925°F (495°C) or at pressures greater than 1,500 psi (10 350 kPa), these threaded connections shall be seal welded in accordance with para. 127.4.5. The design and installation of insertion type fluid temperature determination, flow measurement, and sampling devices shall be adequate to withstand the effects of the fluid characteristics, fluid flow, and vibration.

114.3

Pipe with a wall thickness less than that of standard weight of ASME B36.10M steel pipe shall not be threaded, regardless of service. For additional threading limitations for pipe used in

(A) steam service over 250 psi (1750 kPa)

(B) water service over 100 psi (700 kPa) and 220°F (105°C)

See para. 104.1.2(C.1).

115 FLARED, FLARELESS, AND COMPRESSION JOINTS

Flared, flareless, and compression type tubing fittings may be used for tube sizes not exceeding 2 in. (50 mm) O.D. within the limitations of applicable standards and specifications listed in Table 126.1.

In the absence of standards, specifications, or allowable stress values for the material used to manufacture the fitting, the designer shall determine that the type and the material of the fitting selected is adequate and safe for the design conditions in accordance with the following requirements:

(A) The pressure design shall meet the requirements of para. 104.7.

Copyright ASME International
Provided by IHS under license with ASME
No reproduction or networking permitted without license from IHS
Not for Resale

Copyright ASME International
Provided by IHS under license with ASME
No reproduction or networking permitted without license from IHS

---,,,

Copyright ASME International
Provided by IHS under license with ASME
No reproduction or networking permitted without license from IHS

Table 112 Piping Flange Bolting, Facing, and Gasket Requirements (Cont'd)

Refer to Paras. 108, 110, and 112

Item	Flange A Mating With Flange B		Bolting	Flange Facings	Gaskets
	Flange A	Flange B			
(f)	Class 250 cast iron	Class 250 cast iron, Class 300 steel and stainless steel, or Class 300 ductile iron	(f)(1) "Low strength" [Notes (1), (2), and (5)]	(f)(1) Raised or flat on one or both flanges	(f)(1) Flat ring nonmetallic to ASME B16.21, Table 3
			(f)(2) "Higher strength" or "low strength" [Notes (1) through (5)]	(f)(2) Flat	(f)(2) Full face nonmetallic to ASME B16.21 Table 6 (Class 300)
(g)	Class 300 bronze	Class 250 cast iron, Class 300 bronze, Class 300 steel and stainless steel, or Class 300 ductile iron	"Higher strength" or "low strength" [Notes (1) through (7)]	Flat	Full face nonmetallic to ASME B16.21, Table 11 [Note (8)]
(h)	Class 300 ductile iron	Class 300 steel and stainless steel, or Class 300 ductile iron	(h)(1) "Low strength" [Notes (1), (2), and (5)]	(h)(1) Raised or flat on one or both flanges	(h)(1) Flat ring nonmetallic to ASME B16.5, Annex E, Group Ia, Fig. E3 [Note (11)]
			(h)(2) "Higher strength" [Notes (3), (4) and (5)]	(h)(2) Raised or flat on one or both flanges	(h)(2) Ring style to ASME B16.5, Annex E [Notes (10) and (11)]
			(h)(3) "Higher strength" or "low strength" [Notes (1) through (5)]	(h)(3) Flat	(h)(3) Full face nonmetallic to ASME B16.5, Annex E, Group Ia material [Note (11)]

Not for Resale

Copyright ASME International
Provided by IHS under license with ASME
No reproduction or networking permitted without license from IHS

Table 112 Piping Flange Bolting, Facing, and Gasket Requirements (Cont'd)

Refer to Paras. 108, 110, and 112

Item	Flange A Mating With Flange B		Bolting	Flange Facings	Gaskets
	Flange A	Flange B			
(i)	Class 300 and higher classes, steel and stainless steel	Class 300 and higher classes, steel and stainless steel	(i)(1) "Low strength" [Notes (1), (2), and (5)]	(i)(1) Raised or flat on one or both flanges; large or small male and female; large or small tongue and groove	(i)(1) Flat ring nonmetallic to ASME B16.5, Para. 6.11 and Annex E, Group Ia material [Note (11)]
			(i)(2) "Higher strength" [Notes (3), (4), and (5)]	(i)(2) Raised or flat on one or both flanges; large or small male and female; large or small tongue and groove	(i)(2) Ring style to ASME B16.5, Para. 6.11 and Annex E [Notes (10) and (11)]
			(i)(3) "Higher strength" [Notes (3), (4), and (5)]	(i)(3) Ring joint	(i)(3) Ring joint to ASME B16.20
(j)	Class 800 cast iron	Class 800 cast iron	"Low strength" [Notes (1), (2), and (5)]	Raised or large male and female	Flat ring nonmetallic to ASME B16.21, Table 4

GENERAL NOTES:

(a) Bolting (including nuts), flange facing, and gasket selection (materials, dimensions, bolt stress, gasket factor, seating stress, etc.) shall be suitable for the flanges, service conditions, and hydrostatic tests. There shall be no overstressing of the gasket or flanges from the expected bolt loading or external bending loads.

(b) Unless otherwise stated, the flange facing described applies to both flanges A and B.

(c) For flanges other than to ASME B16.1, in sizes larger than NPS 24 (NPS 12 in Class 2500), gasket dimensions should be verified against the flanges specified (e.g., MSS SP-44 and API 605).

(d) The effective seating of a full face gasket shall extend to the outside edge of the flange. For flat or raised face flanges, a flat ring or ring style gasket shall be self-centering, extending to the inner edge of the bolt holes or bolts. Where the joint contains a cast iron, bronze, nonmetallic, or MSS SP-51 stainless steel flange, the effective gasket seating shall extend to the outside diameter of the gasket.

(e) Unconfined nonmetallic gaskets shall not be used on flat or raised face flanges if the expected normal operating pressure exceeds 720 psi (4950 kPa) or the temperature exceeds 750°F (400°C). Metal gaskets, spiral wound gaskets of metal with nonmetallic filler, and confined nonmetallic gaskets are not limited as to pressure or temperature provided the gasket materials are suitable for the maximum fluid temperatures.

Not for Resale

Copyright ASME International
Provided by IHS under license with ASME
No reproduction or networking permitted without license from IHS

Table 112 Piping Flange Bolting, Facing, and Gasket Requirements (Cont'd)
Refer to Paras. 108, 110, and 112

NOTES:

(1) "Low strength" bolting shall conform to ASTM:

A 193, Grade B8A, B8CA, B8MA, or B8TA	A 307, Grade B [Bolting to A 307, Grade B shall not be used at temperatures greater than 400°F (200°C)]
A 193, Class 1, Grade B8, B8C, B8M, or B8T	A 320, Class 1, Grade B8, B8C, B8M, or B8T

(2) Nuts for "low strength" bolting shall conform to the grade of ASTM A 194 or A 563 as required by the bolting specification.

(3) "Higher strength" bolting shall conform to ASTM:

A 193, Grade B5, B6, B6X, B7, B7M, or B16	A 354, Grade BC or BD
A 193, Class 2, Grade B8, B8C, B8M, or B8T	A 437, Grade B4B, B4C, or B4D
A 320, Grade L7, L7A, L7B, L7C, or L43	
A 320, Class 2, Grade B8, B8C, B8F, B8M, or B8T	A 453, Grade 651 or 660

(4) Nuts for "higher strength" bolting shall conform to the grade of ASTM A 194, A 437, A 453, A 563, or A 564, as required by the bolting specification.

(5) For temperatures below −20°F (−29°C), bolting conforming to the ASTM A 320 classes and grades listed, respectively, in Note (3) "higher strength" and Note (1) "low strength" shall be used. For this bolting to ASTM A 320, Grades L7, L7A, L7B, L7C, and L43, the nuts shall conform to ASTM A 194, Grade 4 or 7 with impact requirements of A 320. For bolting to the other grades of A 320, the nuts shall conform to A 320.

(6) Additionally, for joints containing bronze flanges, nonferrous bolting conforming to the following may be used:

ASTM B 98, UNS C65100, C65500, and C66100; half hard; to 350°F (177°C) maximum	ASTM B 164, UNS N04400 and N04405; hot finish; 550°F (288°C) maximum
ASTM B 150, UNS C61400, to 500°F (260°C) maximum	ASTM B 164, UNS N04400, cold drawn, cold drawn and stress relieved, or cold drawn and stress equalized; and N04405, cold drawn, to 500°F (260°C) maximum
ASTM B 150, UNS C63000 and C64200, to 550°F (288°C) maximum	

Not for Resale

Copyright ASME International
Provided by IHS under license with ASME
No reproduction or networking permitted without license from IHS

Not for Resale

Table 112 Piping Flange Bolting, Facing, and Gasket Requirements (Cont'd)

Refer to Paras. 108, 110, and 112

NOTES (Cont'd):

(7) Where a flanged joint contains dissimilar materials (e.g., bronze flanges with steel bolting) and has a design temperature exceeding 300°F (149°C), the differences in coefficients of expansion shall be considered.

(8) For bronze flanges where "low strength" or nonferrous bolting is used, nonmetallic gaskets having seating stresses greater than 1600 psi shall not be used.

(9) For stainless steel flanges to MSS SP-51 and for nonmetallic flanges, preference shall be given to gasket materials having the lower minimum design seating stress as listed in ASME B16.5, Fig. E1, Group 1a.

(10) For items (d)(2), and (i)(2), where two flat face flanges are used in a joint and the gasket seating width (considering both the gasket and the flanges) is greater than that of an ASME B16.5 flange having a standard raised face, the gasket material shall conform to ASME B16.5, Annex E, Group 1a.

(11) Where asbestos sheet, fiber or filler material for gaskets is specified in ASME B16.5, this limitation shall not apply to ASME B31.1 applications. Any nonmetallic material suitable for the operating conditions may be used in lieu of asbestos provided the requirements of Table 112 are met.

Table 114.2.1

Maximum Nominal Size, in.	Maximum Pressure psi	Maximum Pressure kPa
3	400	2 750
2	600	4 150
1	1,200	8 300
3/4 and smaller	1,500	10 350

GENERAL NOTE: For instrument, control and sampling lines, refer to para. 122.3.6(A.5)

(B) A suitable quantity of the type, size, and material of the fittings to be used shall meet successful performance tests to determine the safety of the joint under simulated service conditions. When vibration, fatigue, cyclic conditions, low temperature, thermal expansion, or hydraulic shock are expected, the applicable conditions shall be incorporated in the test.

115.1

Fittings and their joints shall be compatible with the tubing with which they are to be used and shall conform to the range of wall thicknesses and method of assembly recommended by the manufacturer.

115.2

Fittings shall be used at pressure-temperature ratings not exceeding the recommendations of the manufacturer. Service conditions, such as vibration and thermal cycling, shall be considered in the application.

115.3

See para. 114.1 for requirements of threads on piping components.

115.4

Flareless fittings shall be of a design in which the gripping member or sleeve shall grip or bite into the outer surface of the tube with sufficient strength to hold the tube against pressure, but without appreciably distorting the inside tube diameter. The gripping member shall also form a pressure seal against the fitting body.

When using bite type fittings, a spot check shall be made for adequate depth of bite and condition of tubing by disassembling and reassembling selected joints.

Grip-type fittings that are tightened in accordance with manufacturer's instructions need not be disassembled for checking.

116 BELL END JOINTS

116.1

Elastomeric-gasket bell end joints may be used for water and other nonflammable, nontoxic service where experience or tests have demonstrated that the joint is safe for the operating conditions and the fluid being transported. Provisions shall be made to prevent disengagement of the joints at bends and dead ends, and to support lateral reactions produced by branch connections or other causes.

116.2

Caulked joints, if used, shall be restricted to cold water service, shall not use lead as the caulking material in potable water service, and shall be qualified as specially designed components in accordance with para. 104.7.2. Provisions shall be made to prevent disengagement of the joints at bends and dead ends, and to support lateral reactions produced by branch connections or other causes.

117 BRAZED AND SOLDERED JOINTS

117.1

Brazed socket-type joints shall be made with suitable brazing alloys. The minimum socket depth shall be sufficient for the intended service. Brazing alloy shall either be end-fed into the socket or shall be provided in the form of a preinserted ring in a groove in the socket. The brazing alloy shall be sufficient to fill completely the annular clearance between the socket and the pipe or tube. The limitations of paras. 117.3(A) and (D) shall apply.

117.2

Soft soldered socket-type joints made in accordance with applicable standards listed in Table 126.1 may be used within their specified pressure-temperature ratings. The limitations in paras. 117.3 and 122.3.2(E.2.3) for instrument piping shall apply. The allowances of para. 102.2.4 do not apply.

117.3 Limitations

(A) Brazed socket-type joints shall not be used on systems containing flammable or toxic fluids in areas where fire hazards are involved.

(B) Soldered socket-type joints shall be limited to systems containing nonflammable and nontoxic fluids.

(C) Soldered socket-type joints shall not be used in piping subject to shock or vibration.

(D) Brazed or soldered joints depending solely upon a fillet, rather than primarily upon brazing or soldering material between the pipe and sockets, are not acceptable.

118 SLEEVE COUPLED AND OTHER PROPRIETARY JOINTS

Coupling type, mechanical gland type, and other proprietary joints may be used where experience or tests

Copyright ASME International
Provided by IHS under license with ASME
No reproduction or networking permitted without license from IHS
Not for Resale

have demonstrated that the joint is safe for the operating conditions, and where adequate provision is made to prevent separation of the joint.

PART 5
EXPANSION, FLEXIBILITY, AND PIPE SUPPORTING ELEMENT

119 EXPANSION AND FLEXIBILITY

119.1 General

In addition to the design requirements for pressure, weight, and other loadings, power piping systems subject to thermal expansion or contraction or to similar movements imposed by other sources shall be designed in accordance with the requirements for the evaluation and analysis of flexibility and stresses specified herein.

119.2 Stress Range

Stresses caused by thermal expansion, when of sufficient initial magnitude, relax in the hot condition as a result of local yielding or creep. A stress reduction takes place and usually appears as a stress of reversed sign when the component returns to the cold condition. This phenomenon is designated as self-springing of the line and is similar in effect to cold springing. The extent of self-springing depends on the material, the magnitude of the initial expansion and fabrication stress, the hot service temperature and the elapsed time. While the expansion stress in the hot condition tends to diminish with time, the sum of the expansion strains for the hot and cold conditions during any one cycle remains substantially constant. This sum is referred to as the strain range; however, to permit convenient association with allowable stress, stress range is selected as the criterion for the thermal design of piping. The allowable stress range shall be determined in accordance with para. 102.3.2(C).

119.3 Local Overstrain

All the commonly used methods of piping flexibility analysis assume elastic behavior of the entire piping system. This assumption is sufficiently accurate for systems where plastic straining occurs at many points or over relatively wide regions, but fails to reflect the actual strain distribution in unbalanced systems where only a small portion of the piping undergoes plastic strain, or where, in piping operating in the creep range, the strain distribution is very uneven. In these cases, the weaker or higher stressed portions will be subjected to strain concentrations due to elastic follow-up of the stiffer or lower stressed portions. Unbalance can be produced

(A) by use of small pipe runs in series with larger or stiffer pipe, with the small lines relatively highly stressed

(B) by local reduction in size or cross section, or local use of a weaker material

(C) in a system of uniform size, by use of a line configuration for which the neutral axis or thrust line is situated close to the major portion of the line itself, with only a very small offset portion of the line absorbing most of the expansion strain

Conditions of this type should preferably be avoided, particularly where materials of relatively low ductility are used; if unavoidable, they may be mitigated by the judicious application of cold spring.

It is recommended that the design of piping systems of austentic steel materials be approached with greater over-all care as to inspection, material selection, fabrication quality, erection, and elimination of local stress raisers.

119.5 Flexibility

Power piping systems shall be designed to have sufficient flexibility to prevent pipe movements from causing failure from overstress of the pipe material or anchors, leakage at joints, or detrimental distortion of connected equipment resulting from excessive thrusts and moments. Flexibility shall be provided by changes of direction in the piping through the use of bends, loops, or offsets; or provisions shall be made to absorb thermal movements by utilizing expansion, swivel, or ball joints, corrugated pipe, or flexible metal hose assemblies.

119.5.1 Expansion, Swivel, or Ball Joints, and Flexible Metal Hose Assemblies. Except as stated in para. 101.7.2, these components may be used where experience or tests have demonstrated that they are suitable for expected conditions of pressure, temperature, service, and cyclic life.

Restraints and supports shall be provided, as required, to limit movements to those directions and magnitudes permitted for specific joint or hose assembly selected.

119.6 Properties

Thermal expansion data and moduli of elasticity shall be determined from Appendix B and Appendix C, Tables C-1 and C-2, which cover more commonly used piping materials. For materials not included in these Tables, reference shall be to authoritative source data such as publications of the National Institute of Standards and Technology.

119.6.1 Thermal Expansion Range. The thermal expansion range shall be determined from Appendix B as the difference between the unit expansion shown for the highest metal temperature and that for the lowest metal temperature resulting from operating or shutdown conditions.

119.6.2 Moduli of Elasticity. The cold and hot moduli of elasticity E_c and E_h shall be as shown in Appendix C, Table C-1 for ferrous materials and Table C-2 for nonferrous materials, based on the temperatures established in para. 119.6.1.

Copyright ASME International
Provided by IHS under license with ASME
No reproduction or networking permitted without license from IHS
Not for Resale

119.6.3 Poisson's Ratio. Poisson's ratio, when required for flexibility calculations, shall be taken as 0.3 at all temperatures for all materials.

119.6.4 Stresses. Calculations for the stresses shall be based on the least cross section area of the component, using nominal dimensions at the location of local strain. Calculations for the thermal expansion stress range S_E shall be based on the modulus of elasticity E_c at room temperature.

119.7 Analysis

119.7.1 Method of Analysis. All piping shall meet the following requirements with respect to thermal expansion and flexibility:

(A) It shall be the designer's responsibility to perform an analysis unless the system meets one of the following criteria.

(A.1) The piping system duplicates a successfully operating installation or replaces a system with a satisfactory service record.

(A.2) The piping system can be adjudged adequate by comparison with previously analyzed systems.

(A.3) The piping system is of uniform size, has not more than two anchors and no intermediate restraints, is designed for essentially noncyclic service (less than 7,000 total cycles), and satisfies the following approximate criterion:

(a) U.S. Customary Units

$$\frac{DY}{(L - U)^2} \leq 0.03$$

(b) SI Units

$$\frac{DY}{(L - U)^2} \leq 208.3$$

where

D = nominal pipe size, in. (mm)
Y = resultant of movements to be absorbed by pipe lines, in. (mm)
L = developed length of line axis, ft (m)
U = anchor distance (length of straight line joining anchors), ft (m)

WARNING: No general proof can be offered that this equation will yield accurate or consistently conservative results. It was developed for ferrous materials and is not applicable to systems used under severe cyclic conditions. It should be used with caution in configurations such as unequal leg U-bends ($L/U > 2.5$), or near straight "saw-tooth" runs, or for large diameter thin-wall pipe, or where extraneous displacements (not in the direction connecting anchor points) constitute a large part of the total displacement. There is no assurance that terminal reactions will be acceptably low, even if a piping system falls within the above limitations.

(B) All systems not meeting the above criteria, or where reasonable doubt exists as to adequate flexibility of the system, shall be analyzed by simplified, approximate, or comprehensive methods of analysis that are appropriate for the specific case.

(C) Approximate or simplified methods may be applied only if they are used for the range of configurations for which their adequate accuracy has been demonstrated.

(D) Acceptable comprehensive methods of analysis include: analytical, model tests, and chart methods which provide an evaluation of the forces, moments and stresses caused by bending and torsion from the simultaneous consideration of terminal and intermediate restraints to thermal expansion of the entire piping system under consideration, and including all external movements transmitted to the piping by its terminal and intermediate attachments. Correction factors shall be applied for the stress intensification of curved pipe and branch connections, as provided by the details of these rules, and may be applied for the increased flexibility of such component parts.

119.7.3 Basic Assumptions and Requirements. In calculating the flexibility of a piping system between anchor points, the system between anchor points shall be treated as a whole. The significance of all parts of the line and of all restraints, such as supports or guides, including intermediate restraints introduced for the purpose of reducing moments and forces on equipment or small branch lines, shall be considered.

Flexibility calculations shall take into account stress intensifying conditions found in components and joints. Credit may be taken when extra flexibility exists in such components. In the absence of more directly applicable data, the flexibility factors and stress-intensification factors shown in Appendix D may be used.[2]

Dimensional properties of pipe and fittings used in flexibility calculations shall be based on nominal dimensions.

The total expansion range as determined from para. 119.6.1 shall be used in all calculations, whether or not the piping is cold sprung. Not only the expansion of the line itself, but also linear and angular movements of the equipment to which it is attached shall be considered.

Where simplifying assumptions are used in calculations or model tests, the likelihood of attendant underestimates of forces, moments, and stresses, including the effects of stress-intensification shall be evaluated.

[2] The stress-intensification factors in Appendix D have been developed from fatigue tests of representative commercially available, matching product forms and assemblies manufactured from ductile ferrous materials. The allowable stress-range is based on tests of carbon and stainless steels. Caution should be exercised when applying Figs. (1) and (13) for the allowable stress-range for certain nonferrous materials (e.g., copper and aluminum alloys) for other than low cycle applications.

Copyright ASME International
Provided by IHS under license with ASME
No reproduction or networking permitted without license from IHS
Not for Resale

119.8 Movements

Movements caused by thermal expansion and loadings shall be determined for consideration of obstructions and design of proper supports.

119.9 Cold Spring

The beneficial effect of judicious cold springing in assisting a system to attain its most favorable position sooner is recognized. Inasmuch as the life of a system under cyclic conditions depends on the stress range rather than the stress level at any one time, no credit for cold spring is allowed with regard to stresses. In calculating end thrusts and moments acting on equipment, the actual reactions at any one time, rather than their range, are significant. Credit for cold springing is accordingly allowed in the calculation of thrusts and moments, provided an effective method of obtaining the designed cold spring is specified and used.

119.10 Reactions

119.10.1 Computing Hot and Cold Reactions. In a piping system with no cold spring or an equal percentage of cold springing in all directions, the reactions (forces and moments) of R_h and R_c, in the hot and cold conditions, respectively, shall be obtained from the reaction R derived from the flexibility calculations based on the modulus of elasticity at room temperature E_c, using Eqs. (9) and (10).

$$R_h = \left(1 - \tfrac{2}{3}C\right)\left(\frac{E_h}{E_c}R\right) \tag{9}$$

$$R_c = -CR, \text{ or}$$

$$= -\left[1 - \frac{(S_h)}{(S_E)} \cdot \frac{(E_c)}{(E_h)}\right]R \tag{10}$$

whichever is greater, and with the further condition that

$$\frac{(S_h)}{(S_E)} \cdot \frac{(E_c)}{(E_h)} < 1$$

where

C = cold spring factor varying from zero for no cold spring to 1.00 for 100% cold spring
S_E = computed thermal expansion stress range, psi (MPa)
E_c = modulus of elasticity in the cold condition, psi (MPa)
E_h = modulus of elasticity in the hot condition, psi (MPa)
R = maximum reaction for full expansion range based on $E_c$which assumes the most severe condition (100% cold spring, whether such is used or not), lb and in.-lb (N and mm·N)
R_c, R_h = maximum reactions estimated to occur in the cold and hot conditions, respectively, lb and in.-lb (N and mm·N)

If a piping system is designed with different percentages of cold spring in various directions, Eqs. (9) and (10) are not applicable. In this case, the piping system shall be analyzed by a comprehensive method. The calculated hot reactions shall be based on theoretical cold springs in all directions not greater than two-thirds of the cold springs as specified or measured.

119.10.2 Reaction Limits. The reactions computed shall not exceed limits which the attached equipment can sustain. Equipment allowable reaction limits (forces and moments) on piping connections are normally established by the equipment manufacturer.

120 LOADS ON PIPE SUPPORTING ELEMENTS

120.1 General

(A) The broad terms "Supporting Elements" or "Supports" as used herein shall encompass the entire range of the various methods of carrying the weight of pipe lines, insulation, and the fluid carried. It, therefore, includes "hangers" that are generally considered as those elements which carry the weight from above, with the supporting members being mainly in tension. Likewise, it includes "supports" which on occasion are delineated as those that carry the weight from below, with the supporting members being mainly in compression. In many cases a supporting element may be a combination of both of these.

(B) In addition to the weight effects of piping components, consideration shall be given in the design of pipe supports to other load effects introduced by service pressure, wind, earthquake, etc., as defined in para. 101. Hangers and supporting elements shall be fabricated and assembled to permit the free movement of piping caused by thermal expansion and contraction. The design of elements for supporting or restraining piping systems, or components thereof, shall be based on all the concurrently acting loads transmitted into the supporting elements.

(C) Where the resonance with imposed vibration and/or shock occurs during operation, suitable dampeners, restraints, anchors, etc., shall be added to remove these effects.

120.2 Supports, Anchors, and Guides

120.2.1 Rigid-Type Supports

(A) The required strength of all supporting elements shall be based on the loadings as given in para. 120.1, including the weight of the fluid transported or the fluid used for testing, whichever is heavier. The allowable stress in supporting equipment shall be as specified in para. 121.2.

Copyright ASME International
Provided by IHS under license with ASME
No reproduction or networking permitted without license from IHS
Not for Resale

(B) Exceptions may be made in the case of supporting elements for large size gas or air piping, exhaust steam, relief or safety valve relief piping, but only under the conditions where the possibility of the line becoming full of water or other liquid is very remote.

120.2.2 Variable and Constant Supports. Load calculations for variable and constant supports, such as springs or counterweights, shall be based on the design operating conditions of the piping. They shall not include the weight of the hydrostatic test fluid. However, the support shall be capable of carrying the total load under test conditions, unless additional support is provided during the test period.

120.2.3 Anchors or Guides. Where anchors or guides are provided to restrain, direct, or absorb piping movements, their design shall take into account the forces and moments at these elements caused by internal pressure and thermal expansion.

120.2.4 Supplementary Steel. Where it is necessary to frame structural members between existing steel members, such supplementary steel shall be designed in accordance with American Institute of Steel Construction specifications, or similar recognized structural design standards. Increases of allowable stress values shall be in accordance with the structural design standard being used. Additional increases of allowable stress values, such as allowed in para. 121.2(I), are not permitted.

121 DESIGN OF PIPE SUPPORTING ELEMENTS

121.1 General

Design of standard pipe supporting elements shall be in accordance with the rules of MSS SP-58. Allowable stress values and other design criteria shall be in accordance with this paragraph. Supporting elements shall be capable of carrying the sum of all concurrently acting loads as listed in para. 120. They shall be designed to provide the required supporting effort and allow pipeline movement with thermal changes without causing overstress. The design shall also prevent complete release of the piping load in the event of spring failure or misalignment. All parts of the supporting equipment shall be fabricated and assembled so that they will not be disengaged by movement of the supported piping. The maximum safe loads for bolts, threaded hanger rods, and all other threaded members shall be based on the root area of the threads.

121.2 Allowable Stress Values

(A) Allowable stress values tabulated in MSS SP-58 or in Appendix A of this Code Section may be used for the base materials of all parts of pipe supporting elements.

(B) Where allowable stress values for a material specification listed in Table 126.1 are not tabulated in Appendix A or in MSS SP-58, allowable stress values from Section II, Part D, Tables 1A and 1B of the ASME Boiler and Pressure Vessel Code may be used, provided the requirements of para. 102.3.1(B) are met. Where there are no stress values given in Section II, Part D, Tables 1A and 1B, an allowable stress value of 25% of the minimum tensile strength given in the material specification may be used, for temperatures not exceeding 650°F (345°C).

(C) For a steel material of unknown specification, or of a specification not listed in Table 126.1 or MSS SP-58, an allowable stress value of 30% of yield strength (0.2% offset) at room temperature may be used at temperatures not exceeding 650°F (345°C). The yield strength shall be determined through a tensile test of a specimen of the material and shall be the value corresponding to 0.2% permanent strain (offset) of the specimen. The allowable stress values for such materials shall not exceed 9,500 psi (65.5 MPa).

(D) The allowable shear stress shall not exceed 80% of the values determined in accordance with the rules of (A), (B), and (C) above.

(E) The allowable compressive stress shall not exceed the value as determined in accordance with the rules of (A), (B), or (C) above. In addition, consideration shall be given to structural stability.

(F) The allowable bearing stress shall not exceed 160% of the value as determined in accordance with the rules of (A), (B), or (C) above.

(G) The allowable base material tensile stress determined from (A), (B), or (C) above shall be reduced 25% for threaded hanger rods.

(H) The allowable stress in welds in support assemblies shall be reduced 25% from those determined in accordance with (A), (B), (C), or (D) above for the weaker of the two metals joined.

(I) Increases in the allowable stress values shall be permitted as follows:

(1) an increase of 20% for short time overloading during operation;

(2) an increase to 80% of the minimum yield strength at room temperature during hydrostatic testing. Where the material allowable stress has been established in accordance with the rules of (C) above, the allowable stress value during hydrostatic testing shall not exceed 16,000 psi (110.3 MPa).

121.3 Temperature Limitations

Parts of supporting elements that are subjected principally to bending or tension loads and that are subjected to working temperatures for which carbon steel is not recommended shall be made of suitable alloy steel, or shall be protected so that the temperature of the supporting member will be maintained within the appropriate temperature limits of the material.

Copyright ASME International
Provided by IHS under license with ASME
No reproduction or networking permitted without license from IHS
Not for Resale

Table 121.5 Suggested Pipe Support Spacing

Nominal Pipe Size, NPS	Suggested Maximum Span			
	Water Service		Steam, Gas, or Air Service	
	ft	m	ft	m
1	7	2.1	9	2.7
2	10	3.0	13	4.0
3	12	3.7	15	4.6
4	14	4.3	17	5.2
6	17	5.2	21	6.4
8	19	5.8	24	7.3
12	23	7.0	30	9.1
16	27	8.2	35	10.7
20	30	9.1	39	11.9
24	32	9.8	42	12.8

GENERAL NOTES:

(a) Suggested maximum spacing between pipe supports for horizontal straight runs of standard and heavier pipe at maximum operating temperature of 750°F (400°C).

(b) Does not apply where span calculations are made or where there are concentrated loads between supports, such as flanges, valves, specialties, etc.

(c) The spacing is based on a fixed beam support with a bending stress not exceeding 2,300 psi (15.86 MPa) and insulated pipe filled with water or the equivalent weight of steel pipe for steam, gas, or air service, and the pitch of the line is such that a sag of 0.1 in. (2.5 mm) between supports is permissible.

121.4 Hanger Adjustments

Hangers used for the support of piping, NPS $2\frac{1}{2}$ and larger, shall be designed to permit adjustment after erection while supporting the load. Screwed adjustments shall have threaded parts to conform to ASME B1.1.

Class 2 fit turnbuckles and adjusting nuts shall have the full length of thread in engagement. Means shall be provided for determining that full thread length is in engagement. All screw and equivalent adjustments shall be provided with suitable locking devices.

121.5 Hanger Spacing

Supports for piping with the longitudinal axis in approximately a horizontal position shall be spaced to prevent excessive sag, bending and shear stresses in the piping, with special consideration given where components, such as flanges and valves, impose concentrated loads. Where calculations are not made, suggested maximum spacing of supports for standard and heavier pipe are given in Table 121.5. Vertical supports shall be spaced to prevent the pipe from being overstressed from the combination of all loading effects.

121.6 Springs

The springs used in variable or constant effort type supports shall be designed and manufactured in accordance with MSS SP-58.

121.7 Fixtures

121.7.1 Anchors and Guides

(A) Anchors, guides, pivots, and restraints shall be designed to secure the desired points of piping in relatively fixed positions. They shall permit the piping to expand and contract freely in directions away from the anchored or guided point and shall be structurally suitable to withstand the thrusts, moments, and other loads imposed.

(B) Rolling or sliding supports shall permit free movement of the piping, or the piping shall be designed to include the imposed load and frictional resistance of these types of supports, and dimensions shall provide for the expected movement of the supported piping. Materials and lubricants used in sliding supports shall be suitable for the metal temperature at the point of sliding contact.

(C) Where corrugated or slip-type expansion joints, or flexible metal hose assemblies are used, anchors and guides shall be provided where necessary to direct the expansion into the joint or hose assembly. Such anchors shall be designed to withstand the force specified by the manufacturer for the design conditions at which the joint or hose assembly is to be used. If this force is otherwise unknown, it shall be taken as the sum of the product of the maximum internal area times the design pressure plus the force required to deflect the joint or hose assembly. Where expansion joints or flexible metal hose assemblies are subjected to a combination of longitudinal and transverse movements, both movements shall be considered in the design and application of the joint or hose assembly.

Flexible metal hose assemblies, applied in accordance with para. 106.4, shall be supported in such a manner as to be free from any effects due to torsion and undue strain as recommended by the manufacturer.

121.7.2 Other Rigid Types

(A) Hanger Rods. Safe loads for threaded hanger rods shall be based on the root area of the threads and allowable stress of the material. In no case shall hanger rods less than $\frac{3}{8}$ in. (9.5 mm) diameter be used for support of pipe NPS 2 and smaller, or less than $\frac{1}{2}$ in. (12.5 mm) diameter rod for supporting pipe NPS $2\frac{1}{2}$ and larger. See Table 121.7.2(A) for carbon steel rods.

Pipe, straps, or bars of strength and effective area equal to the equivalent hanger rod may be used instead of hanger rods.

Hanger rods, straps, etc., shall be designed to permit the free movement of piping caused by thermal expansion and contraction.

(B) Welded link chain of $\frac{3}{16}$ in. (5.0 mm) or larger diameter stock, or equivalent area, may be used for pipe hangers with a design stress of 9,000 psi (62 MPa) maximum.

Copyright ASME International
Provided by IHS under license with ASME
No reproduction or networking permitted without license from IHS Not for Resale

Table 121.7.2(A) Carrying Capacities of Threaded ASTM A 36, A 575, and a 576 Hot-Rolled Carbon Steel

Nominal Rod Diameter, in.	Root Area of Coarse Thread		Max. Safe Load at Rod Temp. of 650°F (345°C)	
	sq in.	sq mm	lb	kg
3/8	0.068	43.87	610	276
1/2	0.126	81.29	1,130	512
5/8	0.202	130.3	1,810	821
3/4	0.302	194.8	2,710	1 229
7/8	0.419	270.3	3,770	1 710
1	0.552	356.1	4,960	2 250
1 1/4	0.889	573.5	8,000	3 629
1 1/2	1.293	834.2	11,630	5 275
1 3/4	1.744	1 125	15,690	7 117
2	2.292	1 479	20,690	9 385
2 1/4	3.021	1 949	27,200	12 338
2 1/2	3.716	2 397	33,500	15 195
2 3/4	4.619	2 980	41,600	18 869
3	5.621	3 626	50,600	22 952
3 1/4	6.720	4 335	60,500	27 442
3 1/2	7.918	5 108	71,260	32 323
3 3/4	9.214	5 945	82,900	37 640
4	10.608	6 844	95,500	43 360
4 1/4	12.100	7 806	108,900	49 440
4 1/2	13.690	8 832	123,200	55 930
4 3/4	15.379	9 922	138,400	62 830
5	17.165	11 074	154,500	70 140

GENERAL NOTE: Tabulated loads are based on an allowable tensile stress of 12,000 psi (82.7 MPa) reduced by 25% using the root thread area as a base. [Refer to para. 121.2(A).]

(C) Cast iron in accordance with ASTM A 48 may be used for bases, rollers, anchors, and parts of supports where the loading will be mainly compression. Cast iron parts shall not be used in tension.

(D) Malleable iron castings in accordance with ASTM A 47 may be used for pipe clamps, beam clamps, hanger flanges, clips, bases, swivel rings, and parts of pipe supports, but their use shall be limited to temperatures not in excess of 450°F (230°C). This material is not recommended for services where impact loads are anticipated.

(E) Brackets shall be designed to withstand forces and moments induced by sliding friction in addition to other loads.

121.7.3 Variable Supports

(A) Variable spring supports shall be designed to exert a supporting force equal to the load, as determined by weight balance calculations, plus the weight of all hanger parts (such as clamp, rod, etc.) that will be supported by the spring at the point of attachment to the pipe.

(B) Variable spring supports shall be provided with means to limit misalignment, buckling, eccentric loading, or to prevent overstressing of the spring.

(C) It is recommended that all hangers employing springs be provided with means to indicate at all times the compression of the spring with respect to the approximate hot and cold positions of the piping system, except where they are used either to cushion against shock or where the operating temperature of the piping system does not exceed 250°F (120°C).

(D) It is recommended that the support be designed for a maximum variation in supporting effort of 25% for the total travel resulting from thermal movement.

121.7.4 Constant Supports. On high temperature and critical service piping at locations subject to appreciable movement with thermal changes, the use of constant support hangers, designed to provide a substantially uniform supporting force throughout the range of travel, is recommended.

(A) Constant support hangers shall have a support variation of no more than 6% throughout the total travel range.

(B) Counterweight type supports shall be provided with stops, and the weights shall be positively secured. Chains, cables, hanger and rocker arm details, or other devices used to attach the counterweight load to the

Copyright ASME International
Provided by IHS under license with ASME
No reproduction or networking permitted without license from IHS Not for Resale

piping, shall be subject to requirements of para. 121.7.2.

(C) Hydraulic type supports utilizing a hydraulic head may be installed to give a constant supporting effort. Safety devices and stops shall be provided to support the load in case of hydraulic failure.

(D) Boosters may be used to supplement the operation of constant support hangers.

121.7.5 Sway Braces. Sway braces or vibration dampeners shall be used to control the movement of piping due to vibration.

121.7.6 Shock Suppressors. For the control of piping due to dynamic loads, hydraulic or mechanical types of shock suppressors are permitted. These devices do not support pipe weight.

121.8 Structural Attachments

121.8.1 Nonintegral Type

(A) Nonintegral attachments include clamps, slings, cradles, saddles, straps, and clevises.

(B) When clamps are used to support vertical lines, it is recommended that shear lugs be welded to the pipe to prevent slippage. The provisions of para. 121.8.2(B) shall apply.

(C) In addition to the provision of (B) above, clamps to support vertical lines should be designed to support the total load on either arm in the event the load shifts due to pipe and/or hanger movement.

121.8.2 Integral Type

(A) Integral attachments include ears, shoes, lugs, cylindrical attachments, rings, and skirts which are fabricated so that the attachment is an integral part of the piping component. Integral attachments shall be used in conjunction with restraints or braces where multiaxial restraint in a single member is to be maintained. Consideration shall be given to the localized stresses induced into the piping component by the integral attachments. Where applicable, the conditions of para. 121.8.1(C) are to apply.

(B) Integral lugs, plates, angle clips, etc., used as part of an assembly for the support or guiding of pipe may be welded directly to the pipe provided the materials are compatible for welding and the design is adequate for the temperature and load. The design of hanger lugs for attachment to piping for high temperature service shall be such as to provide for differential expansion between the pipe and the attached lug.

Welds shall be proportioned so that the shear stresses do not exceed either 0.8 times the applicable S values for the pipe material shown in the Allowable Stress Tables, or the allowable stress values determined in accordance with para. 121.2(A), (B), or (C). If materials for attachments have different allowable stress values than the pipe, the lower allowable stress value of the two shall be used.

121.9 Loads and Supporting Structures

121.9.1 Considerations shall be given to the load carrying capacity of equipment and the supporting structure. This may necessitate closer spacing of hangers on lines with extremely high loads.

121.10 Requirements for Fabricating Pipe Supports

121.10.1 Pipe supports shall be fabricated in accordance with the requirements of para. 130.

PART 6
SYSTEMS

122 DESIGN REQUIREMENTS PERTAINING TO SPECIFIC PIPING SYSTEMS

Except as specifically stated otherwise in this Part 6, all provisions of the Code apply fully to the piping systems described herein.

122.1 Boiler External Piping; in Accordance With Para. 100.1.2(A) — Steam, Feedwater, Blowoff, and Drain Piping

122.1.1 General. The minimum pressure and temperature and other special requirements to be used in the design for steam, feedwater, blowoff, and drain piping from the boiler to the valve or valves required by para. 122.1 shall be as specified in the following paragraphs. Design requirements for desuperheater spray piping connected to desuperheaters located in the boiler proper are provided in para. 122.4.

(A) It is intended that the design pressure and temperature be selected sufficiently in excess of any expected operating conditions, not necessarily continuous, to permit satisfactory operation without operation of the overpressure protection devices. Also, since the operating temperatures of fired equipment can vary, the expected temperature at the connection to the fired equipment shall include the manufacturer's maximum temperature tolerance.

(B) In a forced flow steam generator with no fixed steam and waterline, it is permissible to design the external piping, valves, and fittings attached to the pressure parts for different pressure levels along the path through the steam generator of water-steam flow. The values of design pressure and the design temperature to be used for the external piping, valves, and fittings shall be not less than that required for the expected maximum sustained operating pressure and temperature to which the abutted pressure part is subjected except when one or more of the overpressure protection devices covered by PG-67.4 of Section I of the ASME Boiler and Pressure Vessel Code is in operation. The steam piping shall comply with the requirements for the maximum sustained operating conditions as used in (A) above, or for the design throttle pressure plus 5%, whichever is greater.

Copyright ASME International
Provided by IHS under license with ASME
No reproduction or networking permitted without license from IHS Not for Resale

(C) Provision shall be made for the expansion and contraction of piping connected to boilers to limit forces and moments transmitted to the boiler, by providing substantial anchorage at suitable points, so that there shall be no undue strain transmitted to the boiler. Steam reservoirs shall be used on steam mains when heavy pulsations of the steam currents cause vibration.

(D) Piping connected to the outlet of a boiler for any purpose shall be attached by

(D.1) welding to a nozzle or socket welding fitting

(D.2) threading into a tapped opening with a threaded fitting or valve at the other end

(D.3) screwing each end into tapered flanges, fittings, or valves with or without rolling or peening

(D.4) bolted joints including those of the Van Stone type

(D.5) blowoff piping of firetube boilers shall be attached in accordance with (D.2) above if exposed to products of combustion or in accordance with (D.2), (D.3), or (D.4) above if not so exposed

(E) Nonferrous pipe or tubes shall not exceed NPS 3 in diameter.

(F) American National Standard slip-on flanges shall not exceed NPS 4. Attachment of slip-on flanges shall be by double fillet welds. The throats of the fillet welds shall not be less than 0.7 times the thickness of the part to which the flange is attached.

(G) Hub-type flanges shall not be cut from plate material.

(H) American National Standard socket welded flanges may be used in piping or boiler nozzles provided the dimensions do not exceed NPS 3 for Class 600 and lower and NPS $2\frac{1}{2}$ in Class 1500.

122.1.2 Steam Piping

(A) The value of P to be used in the formulas in para. 104 shall be as follows:

(A.1) For steam piping connected to the steam drum or to the superheater inlet header up to the first stop valve in each connection, the value of P shall be not less than the lowest pressure at which any drum safety valve is set to blow, and the S value shall not exceed that permitted for the corresponding saturated steam temperature.

(A.2) For steam piping connected to the superheater outlet header up to the first stop valve in each connection, the design pressure, except as otherwise provided in (A.4) below shall be not less than the lowest pressure at which any safety valve on the superheater is set to blow, or not less than 85% of the lowest pressure at which any drum safety valve is set to blow, whichever is greater, and the S value for the material used shall not exceed that permitted for the expected steam temperature.

(A.3) For steam piping between the first stop valve and the second valve, when one is required by para. 122.1.7, the design pressure shall be not less than the expected maximum sustained operating pressure or 85% of the lowest pressure at which any drum safety valve is set to blow, whichever is greater, and the S value for the material used shall not exceed that permitted for the expected steam temperature.

(A.4) For boilers installed on the unit system (i.e., one boiler and one turbine or other prime mover) and provided with automatic combustion control equipment responsive to steam header pressure, the design pressure for the steam piping shall be not less than the design pressure at the throttle inlet plus 5%, or not less than 85% of the lowest pressure at which any drum safety valve is set to blow, or not less than the expected maximum sustained operating pressure at any point in the piping system, whichever is greater, and the S value for the material used shall not exceed that permitted for the expected steam temperature at the superheater outlet. For forced-flow steam generators with no fixed steam and waterline, the design pressure shall also be no less than the expected maximum sustained operating pressure.

(A.5) The design pressure shall not be taken at less than 100 psig [700 kPa (gage)] for any condition of service or material.

122.1.3 Feedwater Piping

(A) The value of P to be used in the formulas in para. 104 shall be as follows:

(A.1) For piping from the boiler to and including the required stop valve and the check valve, the minimum value of P except as permitted in para. 122.1.3(A.4) shall exceed the maximum allowable working pressure of the boiler by either 25% or 225 psi (1550 kPa), whichever is the lesser. For an installation with an integral economizer without valves between the boiler and economizer, this paragraph shall apply only to the piping from the economizer inlet header to and including the required stop valve and the check valve.

(A.2) For piping between the required check valve and the globe or regulating valve, when required by para. 122.1.7(B), and including any bypass piping up to the shutoff valves in the bypass, the value of P shall be not less than the pressure required to feed the boiler.

(A.3) The value of P in the formula shall not be taken at less than 100 psig [700 kPa (gage)] for any condition of service or material, and shall never be less than the pressure required to feed the boiler.

(A.4) In a forced flow steam generator with no fixed steam and waterline, the value of P for feedwater piping from the boiler to and including the required stop valve may be in accordance with the requirements of para. 122.1.1(B).

(B) The S value used, except as permitted in (A.4) above, shall not exceed that permitted for the temperature of saturated steam at the maximum allowable working pressure of the boiler.

--`,,```,,,,````-`-`,,`,,`,`,,`---

Copyright ASME International
Provided by IHS under license with ASME
No reproduction or networking permitted without license from IHS

Not for Resale

(C) The size of the feed piping between the boiler and the first required valve [para. 122.1.7(B)] or the branch feed connection [para. 122.1.7(B.4)] shall, as a minimum, be the same as the boiler connection.

122.1.4 Blowoff and Blowdown Piping. Blowoff and blowdown piping are defined as piping connected to a boiler and provided with valves or cocks through which the water in the boiler may be blown out under pressure. This definition is not intended to apply to (i) drain piping, and (ii) piping such as used on water columns, gage glasses, or feedwater regulators, etc., for the purpose of determining the operating condition of the equipment. Requirements for (i) and (ii) are described in paras. 122.1.5 and 122.1.6. Blowoff systems are operated intermittently to remove accumulated sediment from equipment and/or piping, or to lower boiler water level in a rapid manner. Blowdown systems are primarily operated continuously to control the concentrations of dissolved solids in the boiler water.

(A) Blowoff piping systems from water spaces of a boiler, up to and including the blowoff valves, shall be designed in accordance with (A.1) to (A.4) below. Two shutoff valves are required in the blowoff system; specific valve requirements and exceptions are given in para. 122.1.7(C).

(A.1) The value of P to be used in the formulas in para. 104 shall exceed the maximum allowable working pressure of the boiler by either 25% or 225 psi (1550 kPa) whichever is less, but shall be not less than 100 psig [700 kPa (gage)].

(A.2) The allowable stress value for the piping materials shall not exceed that permitted for the temperature of saturated steam at the maximum allowable working pressure of the boiler.

(A.3) All pipe shall be steel. Galvanized steel pipe and fittings shall not be used for blowoff piping. When the value of P does not exceed 100 psig [700 kPa (gage)], the fittings shall be bronze, cast iron, malleable iron, ductile iron, or steel. When the value of P exceeds 100 psig [700 kPa (gage)], the fittings shall be steel and the thickness of pipe and fittings shall not be less than that of Schedule 80 pipe.

(A.4) The size of blowoff piping shall be not less than the size of the connection on the boiler, and shall be in accordance with the rules contained in the ASME Boiler and Pressure Vessel Code, Section I, PG-59.3 and PEB-12.

(B) The blowdown piping system from the boiler, to and including the shutoff valve, shall be designed in accordance with (B.1) through (B.4) below. Only one shutoff valve is required in the blowdown system.

(B.1) The value of P to be used in the formulas in para. 104 shall be not less than the lowest set pressure of any safety valve on the boiler drum.

(B.2) The allowable stress value for the piping materials shall not exceed that permitted for the temperature of saturated steam at the maximum allowable working pressure of the boiler.

(B.3) All pipe shall be steel. Galvanized steel pipe and fittings shall not be used for blowdown piping. When the value of P does not exceed 100 psig [700 kPa (gage)], the fittings shall be bronze, cast iron, malleable iron, ductile iron, or steel. When the value of P exceeds 100 psig [700 kPa (gage)], the fittings shall be steel and the thickness of pipe and fittings shall not be less than that of Schedule 80 pipe.

(B.4) The size of blowdown piping shall be not less than the size of the connection on the boiler, and shall be in accordance with the rules contained in the ASME Boiler and Pressure Vessel Code, Section I, PG-59.3.

(C) The blowoff and blowdown piping beyond the required valves described in (A) and (B) above are classified as nonboiler external piping. The requirements are given in para. 122.2.

122.1.5 Boiler Drains

(A) Complete drainage of the boiler and attached piping shall be provided to the extent necessary to ensure proper operation of the steam supply system. The pipe, fittings, and valves of any drain line shall not be smaller than the drain connection.

(B) If the drain lines are intended to be used both as drains and as blowoffs, then two valves are required and all conditions of paras. 122.1.4, 122.1.7(C), and 122.2 shall be met.

(C) When a drain is intended for use only when the boiler is not under pressure (pressurizing the boiler for rapid drainage is an exception), a single shutoff valve is acceptable under the following conditions: either the valve shall be a type that can be locked in the closed position or a suitable flanged and bolted connection that accepts a blank insert shall be located on the downstream side of the valve. When a single valve is used, it need not be designed for blowoff service.

(D) Drain piping from the drain connection, including the required valve(s) or the blanked flange connection, shall be designed for the temperature and pressure of the drain connection. The remaining piping shall be designed for the expected maximum temperature and pressure. Static head and possible choked flow conditions shall be considered. In no case shall the design pressure and temperature be less than 100 psig [700 kPa (gage)] and 220°F (104°C), respectively.

122.1.6 Boiler External Piping — Miscellaneous Systems

(A) Materials, design, fabrication, examination, and erection of piping for miscellaneous accessories, such as water level indicators, water columns, gage cocks, and pressure gages, shall be in accordance with the applicable sections of this Code.

--`,,```,,,,````-`-`,,`,,`,`,,`---

Copyright ASME International
Provided by IHS under license with ASME
No reproduction or networking permitted without license from IHS Not for Resale

(B) The value of P to be used in the Formulas in para. 104 shall be not less than the maximum allowable working pressure of the boiler except as provided by para. 122.1.1(B).

(C) Valve requirements for water level indicators or water columns, special gage glass and gage cock requirements, minimum line sizes, and special piping configurations required specifically for cleaning, access, or reliability shall be in accordance with PG-60 of Section I of the ASME Boiler and Pressure Vessel Code.

122.1.7 Valves and Fittings. The minimum pressure and temperature rating for all valves and fittings in steam, feedwater, blowoff, and miscellaneous piping shall be equal to the pressure and temperature specified for the connected piping on the side that has the higher pressure, except that in no case shall the pressure be less than 100 psig [700 kPa (gage)], and for pressures not exceeding 100 psig [700 kPa (gage)] in feedwater and blowoff service, the valves and fittings shall be equal at least to the requirements of the ASME standards for Class 125 cast iron or Class 150 steel.

(A) Steam Stop Valves. Each boiler discharge outlet, except safety valve or safety relief valve connections, or reheater inlet and outlet connections, shall be fitted with a stop valve located at an accessible point in the steam-delivery line and as near to the boiler nozzle as is convenient and practicable.

(A.1) Boiler stop valves shall provide bidirectional shutoff at design conditions. The valve or valves shall meet the requirements of para. 107. Valves with resilient (nonmetallic) seats shall not be used where the boiler maximum allowable working pressure exceeds 1,035 kPa (150 psig) or where the system design temperature exceeds 186°C (366°F). Valves of the outside screw and yoke, rising stem style are preferred. Valves other than those of the outside screw and yoke, rising stem style shall meet the following additional requirements.

(A.1.A) Each valve shall be equipped with a position indicator to visually indicate from a distance whether the valve is open or closed.

(A.1.B) Quarter turn valves shall be equipped with a slow operating mechanism to minimize dynamic loadings on the boiler and attached piping.

(A.2) In the case of a single boiler and prime mover installation, the stop valve required herein may be omitted provided the prime mover throttle valve is equipped with an indicator to show whether it is opened or closed, and it is designed to withstand the required boiler hydrostatic test.

(A.3) When two or more boilers are connected to a common header, or when a single boiler is connected to a header having another steam source, the connection from each boiler having a man-hole opening shall be fitted with two stop valves having an ample free-blow drain between them. The preferred arrangement consists of one stop-check valve (located closest to the boiler) and one valve of the style and design described in (A.1) above. Alternatively, both valves may be of the style and design described in (A.1) above.

When a second stop valve is required, it shall have a pressure rating at least equal to that required for the expected steam pressure and temperature at the valve, or a pressure rating at least equal to 85% of the lowest set pressure of any safety valve on the boiler drum at the expected temperature of the steam at the valve, whichever is greater.

(A.4) All valves and fittings on steam lines shall have a pressure rating of at least 100 psig [700 kPa (gage)] in accordance with the applicable ASME Standard.

(B) Feedwater Valves

(B.1) The feedwater piping for all boilers, except for high temperature water boilers complying with the requirements of (B.8) below, and for forced flow steam generators with no fixed steam and water line complying with the requirements of (B.9) below, shall be provided with a check valve and a stop valve or cock between the check valve and the boiler. The stop valve or cock shall comply with the requirements of (C.5) below.

(B.2) The relative locations of the check and stop (or cock) valves, as required in (B.1) above, may be reversed on a single boiler-turbine unit installation.

(B.3) If a boiler is equipped with a duplicate feed arrangement, each such arrangement shall be equipped as required by these rules.

(B.4) When the supply line to a boiler is divided into branch feed connections and all such connections are equipped with stop and check valves, the stop and check valves in the common source may be omitted.

(B.5) When two or more boilers are fed from a common source, there shall also be a globe or regulating valve in the branch to each boiler located between the check valve and the source of supply. A typical arrangement is shown in Fig. 100.1.2(B). Wherever globe style valves are used on feed piping, the inlet shall be under the disk of the valve.

(B.6) A combination stop and check valve in which there is only one seat and disk, and in which a valve stem is provided to close the valve, shall be considered only as a stop valve, and a check valve shall be installed as otherwise provided.

(B.7) Where an economizer or other feedwater heating device is connected directly to the boiler without intervening valves, the feed valves and check valves required shall be placed on the inlet of the economizer or feedwater heating device.

(B.8) The recirculating return line for a high temperature water boiler shall be provided with the same stop valve, or valves, required by (B.1) and (B.3) above. The use of a check valve in the recirculating return line is optional. A check valve shall not be a substitute for a stop valve.

Copyright ASME International
Provided by IHS under license with ASME
No reproduction or networking permitted without license from IHS
Not for Resale

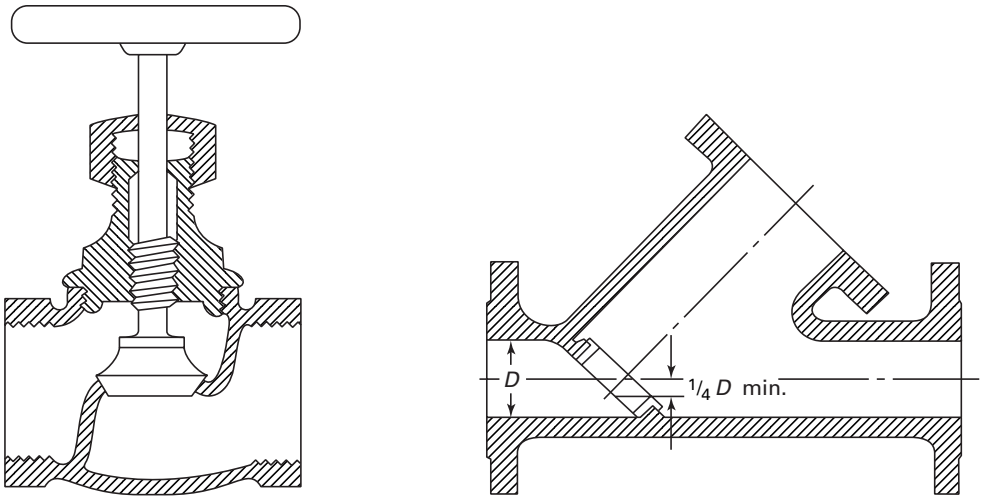

Fig. 122.1.7(C) Typical Globe Valves

(B.9) The feedwater boiler external piping for a forced flow steam generator with no fixed steam and water line may terminate up to and including the stop valve(s) and omitting the check valve(s) provided that a check valve having a pressure rating no less than the boiler inlet design pressure is installed at the discharge of each boiler feed pump or elsewhere in the feedline between the feed pump and the stop valve(s).

(C) Blowoff Valves

(C.1) Ordinary globe valves as shown in Fig. 122.1.7(C) sketch (1), and other types of valves that have dams or pockets where sediment can collect, shall not be used on blowoff connections.

(C.2) Y-type globe valves as shown in Fig. 122.1.7(C) sketch (2) or angle valves may be used in vertical pipes, or they may be used in horizontal runs of piping provided they are so constructed or installed that the lowest edge of the opening through the seat is at least 25% of the inside diameter below the center line of the valve.

(C.3) The blowoff valve or valves, the pipe between them, and the boiler connection shall be of the same size except that a larger pipe for the return of condensate may be used.

(C.4) For all boilers [except electric steam boilers having a normal water content not exceeding 100 gal (380 1), traction-purpose, and portable steam boilers; see (C.11) and (C.12) below] with allowable working pressure in excess of 100 psig [700 kPa (gage)], each bottom blowoff pipe shall have two slow-opening valves, or one quick-opening valve or cock, at the boiler nozzle followed by a slow-opening valve. All valves shall comply with the requirements of (C.5) and (C.6) below.

(C.5) When the value of P required by para. 122.1.4(A.1) does not exceed 250 psig [1750 kPa (gage)], the valves or cocks shall be bronze, cast iron, ductile iron, or steel. The valves or cocks, if of cast iron, shall not exceed NPS $2\frac{1}{2}$ and shall meet the requirements of the applicable ASME Standard for Class 250, as given in Table 126.1, and if of bronze, steel, or ductile iron construction, shall meet the requirements of the applicable standards as given in Table 126.1 or para. 124.6.

(C.6) When the value of P required by para. 122.1.4(A.1) is higher than 250 psig [1750 kPa (gage)], the valves or cocks shall be of steel construction equal at least to the requirements of Class 300 of the applicable ASME Standard listed in Table 126.1. The minimum pressure rating shall be equal to the value of P required by para. 122.1.4(A.1).

(C.7) If a blowoff cock is used, the plug shall be held in place by a guard or gland. The plug shall be distinctly marked in line with the passage.

(C.8) A slow-opening valve is a valve which requires at least five 360 deg turns of the operating mechanism to change from fully closed to fully opened.

(C.9) On a boiler having multiple blowoff pipes, a single master valve may be placed on the common blowoff pipe from the boiler, in which case only one valve on each individual blowoff is required. In such a case, either the master valve or the individual valves or cocks shall be of the slow-opening type.

(C.10) Two independent slow-opening valves, or a slow-opening valve and a quick-opening valve or cock, may be combined in one body and may be used provided the combined fitting is the equivalent of two independent slow-opening valves, or a slow-opening valve and a quick-opening valve or cock, and provided further that

Copyright ASME International
Provided by IHS under license with ASME
No reproduction or networking permitted without license from IHS
Not for Resale

Table 122.2

Boiler or Vessel Pressure		Design Pressure		Design Temperature	
psig	kPa (gage)	psig	kPa (gage)	°F	°C
Below 250	1 750	Note (1)		...	...
250–600	1 750–4 150	250	1 750	410	210
601–900	4 151–6 200	400	2 750	450	230
901–1,500	6 201–10 300	600	4 150	490	255
1,501 and higher	10 301 and higher	900	6 200	535	280

NOTE:
(1) For boiler or vessel pressure(s) below 250 psig [1,750 kPa (gage)], the design pressure shall be determined in accordance with para. 122.1.4(B.1) but need not exceed 250 psig [1,750 kPa (gage)].

the failure of one to operate cannot affect the operation of the other.

(C.11) Only one blowoff valve, which shall be either a slow-opening or quick-opening blowoff valve or a cock, is required on traction and/or portable boilers.

(C.12) Only one blowoff valve, which shall be of a slow-opening type, is required on forced circulation and electric steam boilers having a normal water content not exceeding 100 gal (380 liter).

(D) Safety Valves

(D.1) Safety valves, relief valves, and safety relief valves shall conform to the requirements of PG-67, PG-68, PG-69, PG-70, PG-71, PG-72, and PG-73 of Section I of the ASME Boiler and Pressure Vessel Code.

122.2 Blowoff and Blowdown Piping in Nonboiler External Piping

(A) From Boilers

(A.1) Blowoff piping, located between the valves described in para. 122.1.4(A) and the blowoff tank or other point where the pressure is reduced approximately to atmospheric pressure and cannot be increased by closing a valve, shall be designed for saturated steam at the appropriate pressure and temperature in accordance with Table 122.2. The provisions of para. 122.1.4(A.3) shall apply.

(A.2) Blowdown piping, located after the valve described in para. 122.1.4(B) in which the pressure cannot be increased by closing a valve, shall be designed for the appropriate pressure and temperature in accordance with Table 122.2. The provisions of para. 122.1.4(B.3) shall apply.

(A.3) When design pressure of Table 122.2 can be exceeded due either to closing of a downstream valve, calculated pressure drop, or other means, the entire blowoff or blowdown piping system shall be designed in accordance with para. 122.1.4(A) or (B), respectively.

(B) From Pressure Vessels Other Than Boilers

(B.1) The design pressure and temperature of the blowoff piping from the pressure vessel to and including the blowoff valve(s) shall be not less than the vessel design conditions.

122.3 Instrument, Control, and Sampling Piping

(A) The requirements of this Code, as supplemented by para. 122.3, shall apply to the design of instrument, control, and sampling piping for safe and proper operation of the piping itself.

(B) The term "Instrument Piping" shall apply to all valves, fittings, tubing, and piping used to connect instruments to main piping or to other instruments or apparatus or to measuring equipment as used within the classification of para. 100.1.

(C) The term "Control Piping" shall apply to all valves, fittings, tubing, and piping used to interconnect pneumatically or hydraulically operated control apparatus, also classified in accordance with para. 100.1, as well as to signal transmission systems used to interconnect instrument transmitters and receivers.

(D) The term "Sampling Piping" shall apply to all valves, fittings, tubing, and piping used for the collection of samples, such as steam, water, oil, gas, and chemicals.

(E) Paragraph 122.3 does not apply to tubing used in permanently closed systems, such as fluid-filled temperature responsive devices, or the temperature responsive devices themselves.

(F) Paragraph 122.3 does not apply to the devices, apparatus, measuring, sampling, signalling, transmitting, controlling, receiving, or collecting instruments to which the piping is connected.

122.3.1 Materials and Design. The materials utilized for valves, fittings, tubing, and piping shall meet the particular conditions of service and the requirements of the applicable specifications listed under general paras. 105, 106, 107, and 108 with allowable stresses in accordance with the Allowable Stress Tables in Appendix A.

The materials for pressure retention components used for piping specialities such as meters, traps, and strainers in flammable, combustible, or toxic fluid systems shall in addition conform to the requirements of paras. 122.7 and 122.8.

122.3.2 Instrument Piping

(A) Takeoff Connections

(A.1) Takeoff connections at the source, together with attachment bosses, nozzles, and adapters, shall be

Copyright ASME International
Provided by IHS under license with ASME
No reproduction or networking permitted without license from IHS Not for Resale

made of material at least equivalent to that of the pipe or vessel to which they are attached. The connections shall be designed to withstand the source design pressure and temperature and be capable of withstanding loadings induced by relative displacement and vibration. The nominal size of the takeoff connections shall not be less than NPS ½ for service conditions not in excess of either 900 psi (6 200 kPa) or 800°F (425°C), and NPS ¾ (for adequate physical strength) for design conditions which exceed either of these limits. Where the size of the main is smaller than the limits given above, the takeoff connection shall not be less than the size of the main line.

(A.2) To prevent thermal shock to the main steam line by contact with the colder condensate return from the instrument, steam meter or instrument takeoff connections shall be lagged in with the steam main. For temperature in excess of 800°F (425°C), they may also be arranged to make metallic contact lengthwise with the steam main.

(B) Valves

(B.1) Shutoff Valves. Shutoff valves shall be provided at takeoff connections. They shall be capable of withstanding the design pressure and temperature of the pipe or vessel to which the takeoff adapters or nipples are attached.

(B.2) Blowdown Valves

(B.2.1) Blowdown valves at or near the instrument shall be of the gradual opening type. For subcritical pressure steam service, the design pressure for blowdown valves shall be not less than the design pressure of the pipe or vessel; the design temperature shall be the corresponding temperature of saturated steam. For all other services, blowdown valves shall meet the requirements of (B.1) above.

(B.2.2) When blowdown valves are used, the valves at the instrument as well as any intervening fittings and tubing between such blowdown valves and the meter shall be suitable at 100°F (40°C) for at least 1½ times the design pressure of the piping system, but the rating of the valve at the instrument need not exceed the rating of the blowdown valve.

(B.2.3) When blowdown valves are not used, instrument valves shall conform to the requirements of (B.2.1) above.

(C) Reservoirs or Condensers. In dead end steam service, the condensing reservoirs and connecting nipples, which immediately follow the shutoff valves, shall be made of material suitable for the saturated steam temperature corresponding to the main line design pressure.

(D) Materials for Lines Between Shutoff Valves and Instruments

(D.1) Copper, copper alloys, and other nonferrous materials may be used in dead end steam or water services up to the design pressure and temperature conditions used for calculating the wall thickness in accordance with para. 104 provided that the temperature within the connecting lines for continuous services does not exceed 406°F (208°C).

Where water temperature in the reservoir of condensers is above 406°F (208°C), a length of uninsulated steel tubing at least 5 ft (1.5 m) long shall immediately follow the condenser ahead of the connecting copper tubing to the instrument.

(D.2) The minimum size of the tubing or piping is a function of its length, the volume of fluid required to produce full scale deflections of the instrument, and the service of the instrument. When required to prevent plugging as well as to obtain sufficient mechanical strength, the inside diameter of the pipe or tube should not be less than 0.36 in. (9.14 mm), with a wall thickness of not less than 0.049 in. (1.25 mm). When these requirements do not apply, smaller sizes with wall thickness in due proportions may be used. In either case, wall thickness of the pipe or tube shall meet the requirements of (D.3) below.

(D.3) The piping or tubing shall be designed in accordance with para. 104 with consideration for water hammer.

(E) Fittings and Joints

(E.1) For dead end steam service and for water above 150°F (65°C), fittings of the. flared, flareless, or socket welding type, or other suitable type of similar design shall be used. The fittings shall be suitable for the header pressure and corresponding saturated steam temperature or water temperature, whichever applies. For supercritical pressure conditions the fittings shall be suitable for the design pressure and temperature of the main fluid line.

(E.2) For water, oil and similar instrument services, any of the following types may be used, within the pressure-temperature limitations of each.

(E.2.1) For main line hydraulic pressures above 500 psi (3 450 kPa) and temperatures up to 150°F (65°C), steel fittings either of the flared, flareless, socket welded, fusion welded, or silver brazed socket type shall be used.

(E.2.2) For main line pressures up to 500 psi (3 450 kPa) and temperatures up to 150°F (65°C), the fittings may be: (E.2.2.1) flared or silver brazed socket type, inverted flared or flareless compression type, all of brass or bronze.

(E.2.3) For pressures up to 175 psi (1 200 kPa) or temperatures up to 250°F (120°C), soldered type fittings may be used with water-filled or air-filled tubing under adjusted pressure-temperature ratings. These fittings are not recommended where mechanical vibration, hydraulic shock, or thermal shock are encountered.

122.3.3 Control Piping

(A) Takeoff Connections

(A.1) Takeoff connections shall be in accordance with para. 122.3.2(A.1).

(B) Valves

Copyright ASME International
Provided by IHS under license with ASME
No reproduction or networking permitted without license from IHS
Not for Resale

(B.1) Shutoff valves shall be in accordance with para. 122.3.2(B.1).

(C) Materials

(C.1) The same materials may be used for control lines as for instrument lines, except that the minimum inside diameter shall be 0.178 in. (4.52 mm) with a minimum wall thickness of 0.028 in. (0.71 mm), provided that this wall thickness is not less than that required by para. 122.3.2(D.3). If a control device has a connection smaller than ¼ in. (6.0 mm), the size reduction from the control tubing to the control device shall be made as close to the control device as possible.

(D) Fittings and Joints

(D.1) Fittings and joints shall be in accordance with para. 122.3.2(E.2).

122.3.4 Sampling Piping

(A) Takeoff Connections

(A.1) Takeoff connections shall be in accordance with para. 122.3.2(A.1).

(B) Valves

(B.1) Shutoff valves shall be in accordance with para. 122.3.2(B.1).

(B.2) Blowdown valves shall be of the gradual opening type and shall be suitable for main line design pressure and temperature.

(C) Materials

(C.1) The materials to be used for sampling lines shall conform to minimum requirements for the main line to which they connect.

(D) Fittings and Joints

(D.1) For subcritical and supercritical pressure steam, and for water above 150°F (65°C), fittings of the flared, flareless, or socket welding type, or other suitable type of similar design shall be used. The fittings shall be suitable for main line design pressure and temperature.

(D.2) For water below 150°F (65°C), fittings and joints shall be suitable for main line design pressure and temperature and shall be in accordance with para. 122.3.2(E.2).

122.3.6 Fittings and Joints

(A) All fittings shall be in accordance with standards and specifications listed in Table 126.1.

(A.1) Socket welded joints shall comply with the requirements of para. 111.3.

(A.2) Flared, flareless, and compression type fittings and their joints shall comply with the requirements of para. 115.

(A.3) Silver brazed socket type joints shall comply with the requirements of paras. 117.1 and 117.3.

(A.4) Solder type joints shall comply with the requirements of paras. 117.2 and 117.3.

(A.5) The use of taper threaded joints up to and including NPS ½ is permitted at pressures up to 5,000 psi (34 500 kPa) in dead end service from outlet end and downstream of shutoff valve located at instrument, at control apparatus, or at discharge of sample cooler.

122.3.7 Special Safety Provisions

(A) Connecting piping subject to clogging from solids or deposits shall be provided with suitable connections for cleaning.

(B) Connecting piping handling air and gases containing moisture or other extraneous materials shall be provided with suitable drains or settling chambers or traps.

(C) Connecting piping which may contain liquids shall be protected from damage due to freezing by heating or other adequate means.

122.3.8 Supports. Supports shall be furnished as specified in para. 121 not only for safety but also to protect the piping against detrimental sagging, external mechanical injury abuse, and exposure to unusual service conditions.

122.3.9 Installations

(A) Instrument, control, and sampling piping shall be inspected and tested in accordance with paras. 136 and 137.

(B) The inside of all piping, tubing, valves, and fittings shall be smooth, clean, and free from blisters, loose mill scale, sand, and dirt when erected. All lines shall be cleaned after installation and before placing in service.

122.4 Spray-Type Desuperheater Piping for Use on Steam Generators and Reheat Piping

(A) Valves and Piping Arrangement

(A.1) Each spraywater pipe connected to a desuperheater shall be provided with a stop valve and a regulating (spray control) valve. The regulating valve shall be installed upstream of the stop valve. In addition, if the steam generator supplies steam to a steam turbine, a power-operated block valve[3] shall be installed upstream of the regulating valve.

(A.2) A bypass valve around the regulating valve is permitted.

(A.3) A bypass valve around the power-operated block valve is prohibited.

(A.4) On a reheater desuperheater, a drain valve shall be installed between the power-operated block valve and the regulating valve.

(A.5) If the spraywater supply is from the boiler feedwater system and its source is not downstream of the feedwater check valve required by para. 122.1.7, a check valve shall be provided in the spraywater piping between the desuperheater and the spraywater source.

(A.6) It is recommended that the valves and piping be arranged to provide a head of water on the downstream side of the stop valve.

(A.7) A typical arrangement is shown in Fig. 122.4.

[3] For information on the prevention of water damage to steam turbines used for electric power generation, see ASME TDP-1.

Copyright ASME International
Provided by IHS under license with ASME
No reproduction or networking permitted without license from IHS
Not for Resale

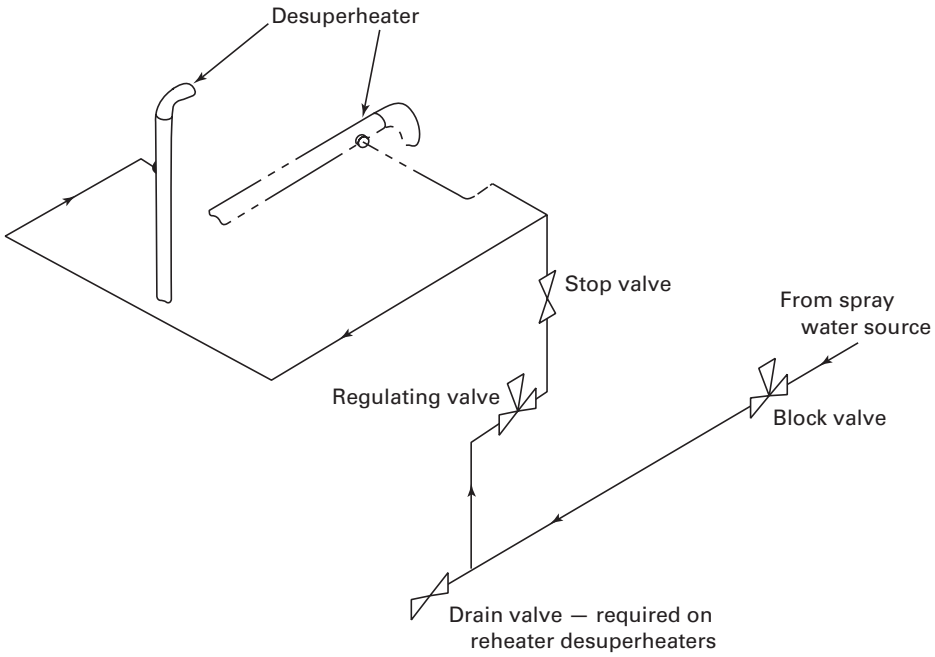

GENERAL NOTE: This figure is a schematic only and is not intended to show equipment layout or orientation.

Fig. 122.4 Desuperheater Schematic Arrangement

(A.8) Provisions shall be made to both steam and water systems to accommodate the operating conditions associated with this service including: water hammer, thermal shock and direct water impingement. The connection for the spraywater pipe should be located per the requirements established by the manufacturer so that complete flow mixing is achieved prior to any bends, elbows, or other flow directional changes being encountered.

(A.9) Insertable-type desuperheaters, which include an integral stop and spraywater regulating valve, may be used within the limitations established by the manufacturer. If this type is used, the individual stop and regulating valves shown in Fig. 122.4 may be omitted. All other requirements described in para. 122.4 shall apply.

(A.10) For Desuperheaters Located Within Reheat Piping. The steam system to be desuperheated shall be provided with proper drainage during all water flow conditions. The drainage system shall function both manually and automatically.

(B) Design Requirements

(B.1) The value of P to be used in the formulas of para. 104 shall be as follows:

(B.1.1) For piping from the desuperheater back to the stop valve required by (A.1) above, the value of P shall be equal to or greater than the maximum allowable working pressure of the desuperheater.

(B.1.2) For the remainder of the spraywater piping system, the value of P shall be not less than the maximum sustained pressure exerted by the spraywater.

(B.2) The stop valve required by (A.1) above shall be designed for the pressure requirement of (B.1.1) above or the maximum sustained pressure exerted by the spraywater, whichever is greater.

(B.3) The S value used for the spraywater piping shall not exceed that permitted for the expected temperature.

NOTE: The temperature varies from that of the desuperheater to that of the spraywater source and is highly dependent on the piping arrangement. It is the responsibility of the designer to determine the design temperature to be used for the various sections of the piping system.

122.5 Pressure-Reducing Valves

122.5.1 General. Where pressure-reducing valves are used, one or more relief devices or safety valves shall be provided on the low pressure side of the system. Otherwise, the piping and equipment on the low pressure side of the system shall be designed to withstand the upstream design pressure. The relief or safety devices shall be located adjoining or as close as practicable to the reducing valve. The combined relieving capacity provided shall be such that the design pressure of the low pressure system will not be exceeded if the reducing valve fails open.

Copyright ASME International
Provided by IHS under license with ASME
No reproduction or networking permitted without license from IHS
Not for Resale

122.5.2 Bypass Valves. Hand controlled bypass valves having a capacity no greater than the reducing valve may be installed around pressure reducing valves if the downstream piping is protected by relief valves as required in para. 122.5.1 or if the design pressure of the downstream piping system and equipment is at least as high as the upstream pressure.

122.5.3 Design of Valves and Relief Devices. Pressure reducing and bypass valves, and relief devices, shall be designed for inlet pressure and temperature conditions. Safety and relief valves shall be in accordance with the requirements of para. 107.8 of this Code.

122.6 Pressure Relief Piping

Pressure relief piping within the scope of this Code shall be supported to sustain reaction forces, and shall conform to the requirements of paras. 122.6.1 and 122.6.2.

122.6.1 Piping to Pressure-Relieving Safety Devices

(A) There shall be no intervening stop valve(s) between piping being protected and the protective device(s).

(B) Diverter or changeover valves designed to allow servicing of redundant protective devices without system depressurization may be installed between the piping to be protected and the required protective devices under the following conditions:

(B.1) Diverter or changeover valves are prohibited on boiler external piping or reheat piping.

(B.2) One hundred percent (100%) of the required relieving capacity shall be continuously available any time the system is in service.

(B.3) Positive position indicators shall be provided on diverter or changeover valves.

(B.4) Positive locking mechanisms and seals shall be provided on diverter or changeover valves to preclude unauthorized or accidental operation.

(B.5) Diverter or changeover valves shall be designed for the most severe conditions of pressure, temperature, and loading to which they are exposed, and shall be in accordance with para. 107.

(B.6) Provision shall be made to safely bleed off the pressure between the isolated protective device and the diverter or changeover valve.

122.6.2 Discharge Piping From Pressure-Relieving Safety Devices

(A) There shall be no intervening stop valve between the protective device or devices and the point of discharge.

(B) When discharging directly to the atmosphere, discharge shall not impinge on other piping or equipment and shall be directed away from platforms and other areas used by personnel.

(C) It is recommended that individual discharge lines be used, but if two or more reliefs are combined, the discharge piping shall be designed with sufficient flow area to prevent blowout of steam or other fluids. Sectional areas of a discharge pipe shall not be less than the full area of the valve outlets discharging thereinto and the discharge pipe shall be as short and straight as possible and so arranged as to avoid undue stresses on the valve or valves.

(D) Discharge lines from pressure-relieving safety devices within the scope of this Code shall be designed to facilitate drainage.

(E) When the umbrella or drip pan type of connection is used, the discharge piping shall be so designed as to prevent binding due to expansion movements.

(F) Drainage shall be provided to remove water collected above the safety valve seat.

(G) Carbon steel materials listed in Appendix A may be used for discharge piping which is subjected to temperatures above 800°F (427°C) only during operation of pressure relieving safety devices provided that

(G.1) the duration of pressure relieving safety device operation is self-limiting

(G.2) the piping discharges directly to atmosphere

(G.3) the material allowable stresses at temperatures above 800°F (427°C) shall be taken from Section II, Part D, Tables 1A and 1B for materials applicable to Section I and Section VIII, Division 1 of the ASME Boiler and Pressure Vessel Code

122.7 Piping for Flammable or Combustible Liquids

122.7.1 General. Piping for flammable or combustible liquids including fuel and lubricating oils is within the scope of this Code. Piping for synthetic lubricants having no flash or fire point need not meet the requirements of para. 122.7.

The designer is cautioned that, among other criteria, static electricity may be generated by the flowing fluid. Additionally, the designer is cautioned of the extreme chilling effect of a liquefied gas flashing to vapor during loss of pressure. This is a factor for determining the lowest expected service temperature relative to the possibility of brittle fracture of materials. Consideration shall also be given to the pressure rise that may occur as a cold fluid absorbs heat from the surroundings.

122.7.2 Materials

(A) Seamless steel or nickel alloy piping materials shall be used in all areas where the line is within 25 ft (7.6 m) of equipment or other lines having an open flame or exposed parts with an operating temperature above 400°F (204°C). Seamless steel or nickel alloy pipe shall also be used for fuel oil systems located downstream of burner shutoff valve(s). The burner shutoff valve(s) shall be located as close to the burner as is practical.

(B) In all other areas, piping systems may include pipe or tube of steel, nickel alloy, copper, or brass construction. Copper tubing shall have a thickness not less than that required by para. 104.1.2(C.3), regardless of

Copyright ASME International
Provided by IHS under license with ASME
No reproduction or networking permitted without license from IHS
Not for Resale

pressure. Refer also to paras. 105, 124.6, and 124.7(A).

Wherever materials other than steel or nickel alloy are used, they shall be so located that any spill resulting from the failure of these materials will not unduly expose persons, buildings, or structures, or can be readily controlled by remote valves.

(C) For lubricating oil systems, steel tubing is an acceptable alternative to steel pipe.

(D) Polyethylene (PE) and reinforced thermosetting resin (RTR) pipe may be used for flammable or combustible liquids in buried installations only. The fluid temperatures shall not exceed 140°F (60°C) and pressures shall be limited to 150 psi (1 000 kPa). Where such PE or RTR pipe is used in flammable or combustible liquid service, the rules of Appendix III shall be considered mandatory. Where jurisdictional requirements mandate that double containment pipe be used, the rules of Appendix III shall be applied to both the inner and outer pipe.

Particular care must be exercised to prevent damage to RTR piping at the connection to the main or other facility. Precautions shall be taken to prevent crushing or shearing of RTR piping due to external loading or settling of backfill and to prevent damage or pull out from the terminal connection resulting from thermal expansion or contraction.

RTR piping may terminate above ground and outside a building, provided that:

(1) the above ground portion of the RTR pipe is completely enclosed in a conduit or casing of sufficient strength to provide protection from external damage and deterioration. Where a flexible conduit is used, the top of the riser must be attached to a solid support. The conduit or casing shall extend a minimum of 6 in. below grade.

(2) the RTR pipe is not subjected to excessive stresses due to external loading.

122.7.3 Piping Joints

(A) Welded joints shall be used between steel or nickel alloy piping components where practicable. Where bolted flanged joints are necessary, the gasket material shall be suitable for the service. Threaded joints, where unavoidable for connecting to equipment, valves, specialties, or instruments, shall be

(A.1) in piping of a thickness no less than extra strong regardless of pressure

(A.2) limited as prescribed in para. 114

(A.3) assembled with extreme care to assure leak tightness, using thread sealant suitable for the service

(B) Threaded joints in copper or brass pipe shall be subject to the same limitations as for steel pipe in (A.1), (A.2), and (A.3), above.

(C) Copper tubing shall be assembled with flared, flareless, or compression type joints as prescribed in para. 115, or brazed in accordance with para. 117. Soft solder type joints are prohibited.

(D) RTR pipe shall be adhesive bonded in accordance with the pipe manufacturer's recommended procedures.

(E) Pipe joints dependent on the friction characteristics or resiliency of combustible materials for mechanical or leak tightness of piping shall not be used inside buildings.

(F) Steel tubing shall be assembled with fittings in accordance with para. 115, or with socket weld fittings.

122.7.4 Valves and Specialties. Valves, strainers, meters, and other specialties shall be of steel or nickel alloy construction. As an alternative, ductile or malleable iron or copper alloy valves and specialties may be used, subject to the restrictions in paras. 124.6 and 124.7, where metal temperatures do not exceed 400°F (204°C).

122.8 Piping for Flammable Gases, Toxic Gases or Liquids, or Nonflammable Nontoxic Gases

Although some gases are liquefied for storage or transport, they shall be considered as gases if their Reid vapor pressure is greater than 40 psia [2,068.6 mm Hg (absolute)] at 100°F (37.8°C).

122.8.1 Flammable Gas

(A) Some of the common flammable gases are acetylene, ethane, ethylene, hydrogen, methane, propane, butane, and natural or manufactured gas used for fuel. It shall be the designers' responsibility to determine the limiting concentrations (upper and lower explosive limits) and the properties of the gas under consideration. The use of explosive concentrations shall be avoided, or the piping shall be designed to withstand explosive forces.

The designer is further cautioned of the extreme chilling effect of gas during rapid expansion. This is a factor for determining the lowest expected service temperature relative to the possibility of brittle fracture of materials.

(B) Materials. Steel piping, subject to the limitations in para. 105, shall be used for all flammable gases, except as otherwise permitted in (B.2), (B.3), and (B.4) below.

(B.1) Pipe joints shall be welded where practicable, except bolted flanged joints with suitable gaskets may be used where necessary. Threaded joints, where unavoidable for connecting to equipment, valves, specialties, or instruments, shall be

(B.1.1) in piping of a thickness no less than extra strong regardless of pressure or material

(B.1.2) limited as prescribed in para. 114, except threaded joints and compression fittings to maximum nominal size of NPS $\frac{3}{4}$ (DN 20) for pressure to 5,000 psi (34 000 kPa) are permitted at the connection to the refillable storage containers pressure regulators

(B.1.3) assembled with extreme care to assure leak tightness, using thread sealant suitable for the service

(B.2) For hydrogen systems, the following alternative materials may be used:

Copyright ASME International
Provided by IHS under license with ASME
No reproduction or networking permitted without license from IHS
Not for Resale

(B.2.1) seamless steel tubing with welded joints;

(B.2.2) seamless copper or brass pipe or tubing with brazed, threaded, or compression fitting joints. Threaded fittings shall not exceed NPS $^{3}/_{4}$ (DN 20). For protection against damage, tubing shall be installed in a guarded manner that will prevent damage during construction, operation, or service. Valves with suitable packing, gages, regulators, and other equipment may also consist of copper alloy materials. Safety relief devices shall be vented individually, and connected vent piping shall be designed to convey the fluid, without pockets, to the outside atmosphere; and then directed away from equipment ventilation systems, and vents from other systems.

(B.3) For fuel gas instrumentation and control, seamless copper tubing subject to the following restrictions may be used:

(B.3.1) The design pressure shall not exceed 100 psi (690 kPa).

(B.3.2) Tubing shall not exceed $^{5}/_{8}$ in. (15.9 mm) nominal outside diameter.

(B.3.3) All joints shall be made with compression or flared fittings.

(B.3.4) Copper tubing shall not be used if the fuel gas contains more than 0.3 grains (19.4 mg) of hydrogen sulfide per 100 cu ft/min (47 liters/sec) of gas at standard conditions.

(B.3.5) Consideration shall be given in the design to the lower strength and melting point of copper compared to steel. Adequate support and protection from high ambient temperatures and vibration shall be provided.

(B.3.6) Tubing shall be installed in a guarded manner that will prevent damage during construction, operation, and service.

(B.4) Polyethylene (PE) pipe may be used for natural gas service in buried installations only. The fluid temperatures shall not exceed 140°F (60°C), nor be below –20°F (–30°C) and pressures shall be limited to 100 psi (690 kPa). Pipe joints shall be heat fused in accordance with manufacturer's recommended procedures. Where PE pipe is used in flammable gas service, the rules of Appendix III shall be considered mandatory.

(C) Valves and Specialties. Valves, strainers, meters, and other specialities shall be of steel or nickel alloy construction. As as alternative, ductile iron or copper alloy valves and specialities may be used, subject to the restrictions in paras. 124.6 and 124.7, where metal temperatures do not exceed 400°F (204°C).

(D) For in-plant fuel gas distribution system(s) where the use of a full-relieving-capacity relief valve(s) as described in para. 122.5 could create an undue venting hazard, an alternative pressure limiting design may be substituted. The alternative design shall include all provisions below:

(D.1) Tandem Gas Pressure Reducing Valves. To protect the low pressure system, two gas pressure reducing valves capable of independent operation shall be installed in series. Each shall have the capability of closing off against the maximum upstream pressure, and of controlling the pressure on the low pressure side at or below the design pressure of the low pressure system, in the event that the other valve fails open. Control lines must be suitably protected, designed, and installed so that damage to any one control line will not result in over pressurizing the downstream piping.

(D.2) Trip Stop Valve. A fail-safe trip stop valve shall be installed to automatically close, in less than 1 sec, at or below the design pressure of the downstream piping. It shall be a manually reset design. The pressure switch for initiating closure of the trip stop valve shall be hardwired directly to the valve tripping circuit. The pressure switch shall be mounted directly on the low pressure piping without an intervening isolation valve. The trip stop valve shall be located so that it is accessible and protected from mechanical damage and from weather or other ambient conditions which could impair its proper functioning. It may be located upstream or downstream of the tandem gas pressure reducing valves. The trip stop valve and all upstream piping shall be designed for the maximum upstream supply pressure. The trip stop valve may also serve as the upstream isolation valve of a double-block and vent gas supply isolation system. Provision shall be made to safely bleed off the pressure downstream of the trip stop valve.

(D.3) Safety Relief Device. The low pressure system shall be protected from any leakage through the pressure reducing valves, when closed, by a safety relief device(s) constructed and designed in accordance with paras. 107.8.3 and 122.5.3, and sized for the possible leakage rate.

122.8.2 Toxic Fluids (Gas or Liquid)

(A) For the purpose of this Code, a toxic fluid is one that may be lethal, or capable of producing injury and/or serious illness through contact, inhalation, ingestion, or absorption through any body surface. It shall be the designers' responsibility to adopt the safety precautions published by the relevant fluid industry which may be more stringent than those described in this Code for toxic fluids. In addition, the piping shall be installed in such a manner that will minimize the possibility of damage from external sources.

(B) Preferably, pipe and pipe fittings should be seamless steel. Wall thickness shall not be less than that in Table 122.8.2(B).

If the fluid is known to be corrosive to the steels in Table 122.8.2(B), the materials and wall thickness selected shall be suitable for the service. (Refer to para. 104.1.2.)

(C) Piping joints shall be made by welding, or by steel socket welding or welding neck flanges with suitable

Copyright ASME International
Provided by IHS under license with ASME
No reproduction or networking permitted without license from IHS
Not for Resale

Table 122.8.2(B) Minimum Wall Thickness Requirements for Toxic Fluid Piping

	Carbon & Low Alloy Steel (App. A, Tables A-1 & A-2)	Stainless & Nickel Alloy Steel (App. A, Tables A-3 & A-4)
NPS 2 (DN 50) & smaller	Extra strong	Sch. 10S
Larger than NPS 2 (DN 50)	Standard weight	Sch. 5S

gaskets. Socket welded joints shall not be larger than NPS 2½ (DN 65). Backing rings used for making girth butt welds shall be removed after welding. Miter welds are not permitted. Fabricated branch connections (branch pipe welded directly to run pipe) are not permitted. Threaded joints, where unavoidable, may be used provided that all of the following requirements are met:

(C.1) The pipe thickness shall not be less than extra strong regardless of pressure or type of material.

(C.2) The requirements of para. 114 shall be met except that threaded joints to a maximum nominal size of NPS ¾ (DN 20) for pressure to 34 500 kPa [gage] (5,000 psig), or to a maximum nominal size of NPS 2 (DN 50) for pressure to 50 psig (345 kPa [gage]) are permitted at the connections to the refillable storage containers and their associated pressure regulators, shutoff valves, pumps, and meters.

(C.3) Threaded joints are assembled with extreme care to assure leak tightness. The requirements of para. 135.5 shall be met. A thread sealant, suitable for the service, shall be used, except where the joint is to be seal welded.

(D) Steel valves shall be used. Bonnet joints with tapered threads are not permitted. Special consideration shall be given to valve design to prevent stem leakage to the environment. Bonnet or cover plate closures and other body joints shall be one of the following types.

(D.1) union

(D.2) flanged with suitable gasketing and secured by at least four bolts

(D.3) proprietary, attached by bolts, lugs, or other substantial means, and having a design that increases gasket compression as fluid pressure increases

(D.4) threaded with straight threads sufficient for mechanical strength, metal-to-metal seats, and a seal weld made in accordance with para. 127.4.5, all acting in series

(E) Tubing not larger than ⅝ in. (16 mm) O.D. with socket welding fittings may be used to connect instruments to the process line. An accessible root valve shall be provided at the process lines to permit isolating the tubing from the process piping. The layout and mounting of tubing shall minimize vibration and exposure to possible damage.

(F) The provisions of para. 102.2.4 are not permitted. The simplified rules for analysis in para. 119.7.1 (A.3) are not permitted. The piping system shall be designed to minimize impact and shock loads. Suitable dynamic analysis shall be made where necessary to avoid or minimize vibration, pulsation, or resonance effects in the piping. The designer is cautioned to consider the possibility of brittle fracture of the steel material selected over the entire range of temperatures to which it may be subjected.

(G) For dry chlorine service between –29°C (–20°F) and 149°C (300°F), the pipe material shall not be less in thickness than seamless extra strong steel.

(H) Toxic fluid piping shall be pneumatic leak tested in accordance with para. 137.5. Alternatively, mass spectrometer or halide leak testing in accordance with para. 137.6, and a hydrostatic test in accordance with para. 137.3 may be performed.

122.8.3 Nonflammable Nontoxic Gas

(A) Piping for nonflammable and nontoxic gases, such as air, oxygen, carbon dioxide, and nitrogen, shall comply with the requirements of this Code, except as otherwise permitted in (B) (below). The designer is cautioned of the extreme chilling effect during rapid expansion. This is a factor for determining the lowest expected service temperature relative to the brittle frac-ture of the material selected.

(B) Threaded joints with or without compression fittings to a maximum nominal size of NPS ¾ for pressures to 5,000 psi (34 500 kPa) are permitted at the connection to the refillable storage containers, pressure regulators, shutoff valves, and meters. Refer to para. 114.

122.9 Piping for Corrosive Liquids and Gases

Where it is necessary to use special material, such as glass, plastics, or metallic piping lined with nonmetals, not listed in Table 126.1, for conveying corrosive or hazardous liquids and gases, the design shall meet the requirements of para. 104.7.

122.10 Temporary Piping Systems

Prior to test and operation of the power plant and its included piping systems, most power and auxiliary service piping are subjected to flushing or chemical cleaning to remove internal foreign material such as rust particles, scale, welding or brazing residue, dirt, etc., which may have accumulated within the piping during the construction period. The flushing or cleaning operation may be accomplished by blowing out with steam or air, by hot oil circulation of oil systems, by acid or caustic fluid circulation, or by other flushing or cleaning methods. Temporary piping, that is piping attached to

Copyright ASME International
Provided by IHS under license with ASME
No reproduction or networking permitted without license from IHS
Not for Resale

the permanent piping system whose function is to provide means for introducing and removing the fluids used in the flushing or cleaning operations, shall be designed and constructed to withstand the operating conditions during flushing and cleaning. The following minimum requirements shall apply to temporary piping systems.

(A) Each such system shall be analyzed for compliance with para. 103.

(B) Connections for temporary piping to the permanent piping systems which are intended to remain, shall meet the design and construction requirements of the permanent system to which they are attached.

(C) The temporary systems shall be supported such that forces and moments due to static, dynamic and expansion loadings will not be transferred in an unacceptable manner to the connected permanent piping system. Paragraphs 120 and 121 shall be used as guidance for the design of the temporary piping systems supporting elements.

(D) The temporary systems shall be capable of withstanding the cyclic loadings which occur during the flushing and cleaning operations. Particular attention shall be given to the effects of large thrust forces which may be generated during high velocity blowing cycles. Where steam piping is to be subjected to high velocity blowing operations, continuous or automatic draining of trapped or potentially trapped water within the system shall be incorporated. Supports at the exhaust terminals of blowdown piping shall provide for restraint of potential pipe whip.

(E) Where necessary, temporary systems containing cast iron or carbon steel material subject to chemical cleaning shall be prewarmed to avoid the potential for brittle failure of the material.

(F) Where temporary piping has been installed and it does not comply with the requirements of this Code for permanent piping systems, it shall be physically removed or separated from the permanent piping to which it is attached prior to testing of the permanent piping system and prior to plant startup.

122.11 Steam Trap Piping

122.11.1 Drip Lines. Drip lines from piping or equipment operating at different pressures shall not be connected to discharge through the same trap.

122.11.2 Discharge Piping. Trap discharge piping shall be designed to the same pressure as the inlet piping unless the discharge is vented to atmosphere, or is operated under low pressure and has no stop valves. In no case shall the design pressure of trap discharge piping be less than the maximum discharge pressure to which it may be subjected. Where two or more traps discharge into the same header, a stop valve shall be provided in the discharge line from each trap. Where the pressure in the discharge piping can exceed the pressure in the inlet piping, a check valve shall be provided in the trap discharge line. A check valve is not required if either the stop valve or the steam trap is designed to automatically prevent reverse flow and is capable of withstanding a reverse differential pressure equal to the design pressure of the discharge piping.

122.12 Exhaust and Pump Suction Piping

Exhaust and pump suction lines for any service and pressure shall have relief valves of suitable size unless the lines and attached equipment are designed for the maximum pressure to which they may accidentally or otherwise be subjected, or unless a suitable alarm indicator, such as a whistle or free blowing relief valve, is installed where it will warn the operator.

122.13 Pump Discharge Piping

Pump discharge piping from the pump up to and including the valve normally used for isolation or flow control shall be designed for the maximum sustained pressure exerted by the pump and for the highest coincident fluid temperature, as a minimum. Variations in pressure and temperature due to occasional inadvertent operation are permitted as limited in para. 102.2.4 under any of the following conditions:

(A) during operation of overpressure relief devices designed to protect the piping system and the attached equipment

(B) during a short period of abnormal operation, such as pump overspeed

(C) during uncontrolled transients of pressure or temperature

122.14 District Heating and Steam Distribution Systems

122.14.1 General. Where pressure reducing valves are used, one or more relief devices or safety valves shall be provided on the low pressure side of the system. Otherwise, the piping and equipment on the low pressure side of the system shall be designed to withstand the upstream design pressure. The relief or safety devices shall be located adjoining or as close as practicable to the reducing valve. The combined relieving capacity provided shall be such that the design pressure of the low pressure system will not be exceeded if the reducing valve fails open.

122.14.2 Alternative Systems. In district heating and steam distribution systems where the steam pressure does not exceed 400 psi (2 750 kPa) and where the use of relief valves as described in para. 122.14.1 is not feasible (e.g., because there is no acceptable discharge location for the vent piping), alternative designs may be substituted for the relief devices. In either case, it is recommended that alarms be provided which will reliably warn the operator of failure of any pressure reducing valve.

Copyright ASME International
Provided by IHS under license with ASME
No reproduction or networking permitted without license from IHS
Not for Resale

(A) Tandem Steam Pressure Reducing Valves. Two or more steam pressure reducing valves capable of independent operation may be installed in series, each set at or below the safe working pressure of the equipment and piping system served. In this case, no relief device is required.

Each pressure reducing valve shall have the capability of closing off against full line pressure, and of controlling the reduced pressure at or below the design pressure of the low pressure system, in the event that the other valve fails open.

(B) Trip Stop Valves. A trip stop steam valve set to close at or below the design pressure of the low pressure system may be used in place of a second reducing valve or a relief valve.

--`,,```,,,,````-`-`,,`,,`,`,,`---

Copyright ASME International
Provided by IHS under license with ASME
No reproduction or networking permitted without license from IHS
Not for Resale

Chapter III
Materials

123 General Requirements

Chapter III contains limitations and required qualifications for materials based on their inherent properties. Use of these materials in piping systems is also subject to requirements and limitations in other parts of this Code.

123.1 Materials and Specifications

123.1.1 Listed Materials. Material meeting the following requirements shall be considered listed and acceptable material.

(A) Materials for which allowable stress values are listed in Appendix A or which have been approved by the procedure established by (C) below.

(B) A material conforming to a specification for which allowable stresses are not listed in Appendix A is acceptable provided its use is not specifically prohibited by this Code Section and it satisfies one of the following requirements.

(B.1) It is referenced in a standard listed in Table 126.1. Such a material shall be used only within the scope of and in the product form covered by the referencing standard listed in Table 126.1.

(B.2) It is referenced in other parts of this Code Section and shall be used only within the scope of and in the product form permitted by the referencing text.

(C) Where it is desired to use materials which are not currently acceptable under the rules of this Code Section, written application shall be made to the Committee fully describing the proposed material and the contemplated use. Such material shall not be considered listed and not used as a listed material until it has been approved by the Committee and allowable stress values have been assigned. Details of information which should be included in such applications are given in Appendix VI. See para. 123.1.2.

(D) Materials conforming to ASME SA or SB specifications may be used interchangeably with material specified to the listed ASTM A or B specifications of the same number, except where the requirements of para. 123.2.2 apply.

123.1.2 Unlisted Materials. Materials other than those meeting the requirements of para. 123.1.1 shall be considered unlisted materials. Such unlisted materials may only be used for nonboiler external piping provided they satisfy all of the following requirements:

(A) Unlisted materials are certified by the material manufacturer to satisfy the requirements of a specification listed in any Code Section of the ASME B31 Code for Pressure Piping, the ASME Boiler and Pressure Vessel Code, Section II, Part D, or to a published specification covering chemistry, physical and mechanical properties, method and process of manufacture, heat treatment, and quality control.

(B) The allowable stresses of the unlisted materials shall be determined in accordance with the rules of para. 102.3.1(C).

(C) Unlisted materials shall be qualified for service within a stated range of minimum and maximum temperatures based upon data associated with successful experience, tests, or analysis; or a combination thereof.

(D) The designer shall document the owner's acceptance for use of unlisted material.

(E) All other requirements of this Code are satisfied.

123.1.3 Unknown Materials. Materials of unknown specification shall not be used for pressure containing piping components.

123.1.5 Size or Thickness. Materials outside the limits of size or thickness given in the title or scope clause of any specification listed in Table 126.1 may be used if the material is in compliance with the other requirements of the specification, and no other similar limitation is given in the rules for construction.

123.1.6 Marking of Materials or Products. Materials or products marked as meeting the requirements for more than one grade, type, or alloy of a material specification or multiple specifications, are acceptable provided

(A) one of the markings includes the material specification, grade, class, and type or alloy of the material permitted by this Code and the material meets all the requirements of that specification

(B) the appropriate allowable stress for the specified grade, type, or alloy of a material specification from Appendix A is used

(C) all other requirements of this Code are satisfied for the material permitted

123.1.7 Materials Manufactured to Other Specification Editions. Materials may meet the requirements of material specification editions other than the editions listed in Appendix F provided

Copyright ASME International
Provided by IHS under license with ASME
No reproduction or networking permitted without license from IHS
Not for Resale

(A) the materials are the same specification, grade, type, class, or alloy, and heat-treated condition, as applicable.

(B) the material tensile and yield strengths shall be compared and any differences shall be evaluated. If the material has a lower strength than required by the edition of the specification in Appendix F, the effect of the reduction on the allowable stress and the design shall be reconciled.

123.2 Piping Components

123.2.1 General. Materials which do not comply with the rules of para. 123.1 may be used for flared, flareless, and compression type tubing fittings, provided that the requirements of para. 115 are met.

123.2.2 Boiler External Piping

(A) Materials for boiler external piping, as defined in para. 100.1.2(A), shall be specified in accordance with ASME SA, SB, or SFA specifications. Material produced under an ASTM specification may be used, provided that the requirements of the ASTM specification are identical or more stringent than the ASME specification for the Grade, Class, or Type produced. The material manufacturer or component manufacturer shall certify, with evidence acceptable to the Authorized Inspector, that the ASME specification requirements have been met. Materials produced to ASME or ASTM material specifications are not limited as to country of origin.

(B) Materials which are not fully identified shall comply with PG-10 of Section I of the ASME Boiler and Pressure Vessel Code.

123.3 Pipe-Supporting Elements

Materials used for pipe-supporting elements shall be suitable for the service and shall comply with the requirements of para. 121.2(C), para. 121.7.2(C), para. 121.7.2(D), para. 123.1, or MSS SP-58. When utilizing MSS SP-58, the allowable stresses for unlisted materials shall be established in accordance with the rules of para. 102.3.1(C) of ASME B31.1 in lieu of para. 4.4 of MSS SP-58.

124 LIMITATIONS ON MATERIALS

124.1 General

The materials listed in the Allowable Stress Tables A-1 through A-9, Appendix A, shall not be used at design temperatures above those for which stress values are given except as permitted by para. 122.6.2(G).

124.2 Steel

(A) Upon prolonged exposure to temperatures above 775°F (415°C), the carbide phase of plain carbon steel, plain nickel alloy steel, carbon-manganese alloy steel, manganese-vanadium alloy steel, and carbon-silicon steel may be converted to graphite.

(B) Upon prolonged exposure to temperatures above 875°F (470°C), the carbide phase of alloy steels, such as carbon-molybdenum, manganese-molybdenum-vanadium, manganese-chromium-vanadium, and chromium-vanadium, may be converted to graphite.

(C) Carbon or alloy steel having carbon content of more than 0.35% shall not be used in welded construction or be shaped by oxygen cutting process or other thermal cutting processes.

(D) Where low alloy 2¼% chromium steels are used at temperatures above 850°F, the carbon content of the base material and weld filler metal shall be 0.05% or higher. (04)

124.4 Cast Gray Iron

The low ductility of cast gray iron may result in sudden failure if shock loading (pressure, temperature or mechanical) should occur. Possible shock loadings and consequences of failure must be considered before specifying the use of such material. Cast iron components may be used within the nonshock pressure-temperature ratings established by the standards and specifications herein and in para. 105.2.1(B). Castings to ASME SA-278 and ASTM A 278 shall have maximum limits of 250 psig [1 725 kPa (gage)] and 450°F (230°C).

The following referenced paragraphs prohibit or restrict the use of gray cast iron for certain applications or to certain pressure-temperature ratings:

Pipe Supports	121.7.2(C)
BEP Blowoff	122.1.4(A.3)
BEP Blowdown	122.1.4(B.3)
BEP Valves and Fittings	122.1.7
Blowoff Valves	122.1.7(C.5) & (C.6)
Non-BEP Blowoff	122.2(A.1)
Non-BEP Blowdown	122.2(A.2)
Flammable or Combustible Liquids	122.7.3
Flammable Gases	122.8.1(B)
Toxic Gases or Liquids	122.8.2

124.5 Malleable Iron

Certain types of malleable iron have low ductility characteristics and may be subject to brittle fracture. Malleable iron may be used for design conditions not to exceed 350 psig [2 415 kPa (gage)] or 450°F (230°C).

The following referenced paragraphs prohibit or restrict the use of malleable iron for certain applications or to certain pressure-temperature ratings:

Pipe Supports	121.7.2(D)
BEP Blowoff	122.1.4(A.3)
BEP Blowdown	122.1.4(B.3)
Non-BEP Blowoff	122.2(A.1)
Non-BEP Blowdown	122.2(A.2)
Flammable or Combustible Liquids	122.7.3(C)
Flammable Gases	122.8.1(B)
Toxic Gases or Liquids	122.8.2

Copyright ASME International
Provided by IHS under license with ASME
No reproduction or networking permitted without license from IHS
Not for Resale

124.6 Ductile (Nodular) Iron

Ductile iron components complying with ANSI/AWWA C110/A21.10, C115/A21.15, C151/A21.51, C153/A21.53, may be used for water and other nontoxic, nonflammable service, with pressure limits as specified in those standards and temperature limits as specified in para. 106(E). These components may not be used for boiler external piping.

Ductile (nodular) iron components conforming to ANSI B16.42 may be used for services including boiler external piping under the following conditions:

(A) Components for boiler external piping shall be used only within the following limitations.

(A.1) Only ASME SA-395 material may be used.

(A.2) Design pressure shall not exceed 350 psig [2 415 kPa (gage)].

(A.3) Design temperature shall not exceed 450°F (230°C).

(B) Welding shall not be used, either in fabrication of the components or in their assembly as a part of a piping system.

(C) The following referenced paragraphs prohibit or restrict the use of ductile iron for certain applications or to certain pressure-temperature ratings:

BEP Blowoff	122.1.4(A.3)
BEP Blowdown	122.1.4(B.3)
BEP Blowoff Valves	122.1.7(C.5)&(C.6)
Non-BEP Blowoff	122.2(A.1)
Non-BEP Blowdown	122.2(A.2)
Flammable or Combustible Liquids	122.7.3(B)
Flammable Gases	122.8.1(D)
Toxic Gases or Liquids	122.8.2
Pipe Supports	123.3

124.7 Nonferrous Metals

Nonferrous metals may be used in piping systems under the following conditions:

(A) The melting points of copper, copper alloys, aluminum, and aluminum alloys must be considered particularly where there is a fire hazard.

(B) The Designer shall consider the possibility of galvanic corrosion when combinations of dissimilar metals, such as copper, aluminum, and their alloys, are used in conjunction with each other or with steel or other metals in the presence of an electrolyte.

(C) Threaded Connections. A suitable thread compound shall be used in making up threaded joints in aluminum pipe to prevent seizing which might cause leakage and perhaps prevent disassembly. Pipe in the annealed temper should not be threaded.

124.8 Cladding and Lining Materials

Materials with cladding or lining may be used provided that

(a) the base material is an approved Code material. The allowable stress used shall be that of the base metal at the design temperature.

(b) the cladding or lining is a material that in the judgment of the user is suitable for the intended service, and the cladding/lining and its method of application do not detract from the serviceability of the base material.

(c) bending procedures are such that damaging or detrimental thinning of the cladding material is prevented.

(d) welding and the inspection of welds is in accordance with the provisions of Chapters V and VI of this Code.

(e) the thickness of the cladding is not credited for structural strength in the piping design.

124.9 Nonmetallic Pipe

This Code recognizes the existence of a wide variety of nonmetallic piping materials which may be used on corrosive (either internal or external) or other specialized applications. Extreme care must be taken in their selection as their design properties vary greatly and depend upon the material, type and grade. Particular consideration shall be given to the possibility of

(A) destruction where fire hazard is involved

(B) decrease in tensile strength at slight increase in temperature

(C) effects of toxicity. Another consideration is that of providing adequate support for the flexible pipe

For nonmandatory rules for nonmetallic piping, see Appendix III of this Code.

124.10 Deterioration of Materials in Service

It is the responsibility of the engineer to select materials suitable for the intended application. Some guideline for selection of protective coatings for metallic piping are provided in Appendix IV.

125 MATERIALS APPLIED TO MISCELLANEOUS PARTS

125.1 Gaskets

Limitations on gasket materials are covered in para. 108.4.

125.2 Bolting

Limitations on bolting materials are covered in para. 108.5.

Copyright ASME International
Provided by IHS under license with ASME
No reproduction or networking permitted without license from IHS
Not for Resale

Chapter IV
Dimensional Requirements

126 MATERIAL SPECIFICATIONS AND STANDARDS FOR STANDARD AND NONSTANDARD PIPING COMPONENTS

126.1 Standard Piping Components

Dimensions of standard piping components shall comply with the standards and specifications listed in Table 126.1 in accordance with para. 100.

126.2 Nonstandard Piping Components

When nonstandard piping components are designed in accordance with para. 104, adherence to dimensional standards of ANSI and ASME is strongly recommended when practicable.

126.3 Referenced Documents

The documents listed in Table 126.1 may contain references to codes, standards, or specifications not listed in this Table. Such unlisted codes, standards, or specifications are to be used only in the context of the listed documents in which they appear.

Where documents listed in Table 126.1 contain design rules which are in conflict with this Code, the design rules of this Code shall govern.

The fabrication, assembly, examination, inspection, and testing requirements of Chapters V and VI apply to the construction of piping systems. These requirements are not applicable to piping components manufactured in accordance with the documents listed in Table 126.1 unless specifically so stated.

--`,,```,,,,````-`-`,,`,,`,`,,`---

Copyright ASME International
Provided by IHS under license with ASME
No reproduction or networking permitted without license from IHS
Not for Resale

Table 126.1 Specifications and Standards

AISC Publications

. . .	Manual of Steel Construction Allowable Stress Design

ASTM Ferrous Material Specifications

Bolts, Nuts, and Studs

A 193/A 193M	Alloy-Steel and Stainless Steel Bolting Materials for High-Temperature Service
A 194/A 194M	Carbon and Alloy Steel Nuts for Bolts for High-Pressure and High-Temperature Service
A 307	Carbon Steel Bolts and Studs, 60,000 psi Tensile Strength
A 320/A 320M	Alloy-Steel Bolting Materials for Low-Temperature Service
A 354	Quenched and Tempered Alloy Steel Bolts, Studs and Other Externally-Threaded Fasteners
A 437/A 437M	Alloy-Steel Turbine-Type Bolting Material Specially Heat Treated for High Temperature Service
A 449	Quenched and Tempered Steel Bolts and Studs
A 453 / A 453M	High-Temperature Bolting Materials, With Expansion Coefficients Comparable to Austenitic Steels

Castings

A 47/A 47M	Ferritic Malleable Iron Castings
A 48	Gray Iron Castings
A 126	Gray Iron Castings for Valves, Flanges, and Pipe Fittings
A 197/A 197M	Cupola Malleable Iron
A 216/A 216M	Steel Castings, Carbon Suitable for Fusion Welding for High Temperature Service
A 217/A 217M	Steel Castings, Martensitic Stainless and Alloy, for Pressure-Containing Parts Suitable for High-Temperature Service
A 278/A 278M	Gray Iron Castings for Pressure-Containing Parts for Temperatures Up to 650°F (350°C)
A 351/A 351M	Steel Castings, Austenitic, for High-Temperature Service
A 389/A 389M	Steel Castings, Alloy, Specially Heat-Treated for Pressure-Containing Parts Suitable for High-Temperature Service
A 395/A 395M	Ferritic Ductile Iron Pressure-Retaining Castings for Use at Elevated Temperatures
A 536	Ductile Iron Castings

Forgings

A 105/A 105M	Forgings, Carbon Steel, for Piping Components
A 181/A 181M	Forgings, Carbon Steel for General Purpose Piping
A 182/A 182M	Forged or Rolled Alloy-Steel Pipe Flanges, Forged Fittings, and Valves and Parts for High-Temperature Service
A 350/A 350M	Forgings, Carbon and Low-Alloy Steel, Requiring Notch Toughness Testing for Piping Components

Cast Pipe

A 377	Standard Index of Specifications for Ductile Iron Pressure Pipe
A 426	Centrifugally Cast Ferritic Alloy Steel Pipe for High-Temperature Service
A 451	Centrifugally Cast Austenitic Steel Pipe for High-Temperature Service

Seamless Pipe and Tube

A 106	Seamless Carbon Steel Pipe for High-Temperature Service
A 179/A 179M	Seamless Cold-Drawn Low-Carbon Steel Heat-Exchanger and Condenser Tubes
A 192/A 192M	Seamless Carbon Steel Boiler Tubes for High-Pressure Service
A 199	Seamless Cold-Drawn Intermediate Alloy-Steel Heat-Exchanger and Condenser Tubes
A 210/A 210M	Seamless Medium-Carbon Steel Boiler and Superheater Tubes
A 213/A 213M	Seamless Ferritic and Austenitic Alloy-Steel Boiler, Superheater, and Heat-Exchanger Tubes
A 335/A 335M	Seamless Ferritic Alloy Steel Pipe for High-Temperature Service
A 369/A 369M	Carbon and Ferritic Alloy Steel Forged and Bored Pipe for High-Temperature Service
A 376/A 376M	Seamless Austenitic Steel Pipe for High-Temperature Central-Station Service

Seamless and Welded Pipe and Tube

A 53/A 53M	Pipe, Steel, Black and Hot-Dipped, Zinc-Coated Welded and Seamless
A 268/A 268M	Seamless and Welded Ferritic and Martensitic Stainless Steel Tubing for General Service
A 312/A 312	Seamless and Welded Austenitic Stainless Steel Pipe
A 333/A 333M	Seamless and Welded Steel Pipe for Low-Temperature Service
A 450/A 450M	General Requirements for Carbon, Ferritic Alloy, and Austenitic Alloy Steel Tubes
A 530/A 530M	General Requirements for Specialized Carbon and Alloy Steel Pipe
A 714	High-Strength Low-Alloy Welded and Seamless Steel Pipe
A 789/A 789M	Standard Specification for Seamless and Welded Ferritic/Austenitic Stainless Steel Tubing for General Services
A790/A790M	Standard Specification for Seamless and Welded Ferritic/Austenitic Stainless Steel Pipe

Copyright ASME International
Provided by IHS under license with ASME
No reproduction or networking permitted without license from IHS
Not for Resale

Table 126.1 Specifications and Standards (Cont'd)

ASTM Ferrous Material Specifications (Cont'd)

Welded Pipe and Tube

A 134	Pipe, Steel, Electric-Fusion (ARC)-Welded (Sizes NPS 16 and Over)
A 135	Electric-Resistance-Welded Steel Pipe
A 139	Electric-Fusion (ARC)-Welded Steel Pipe (NPS 4 in. and Over)
A 178	Electric-Resistance-Welded Carbon and Carbon-Manganese Steel Boiler and Superheater Tubes
A 214/A 214M	Electric-Resistance-Welded Carbon Steel Heat-Exchanger and Condenser Tubes
A 249/A 249M	Welded Austenitic Steel Boiler, Superheater, Heat-Exchanger, and Condenser Tubes
A 254	Copper Brazed Steel Tubing
A 358/A 358M	Electric-Fusion-Welded Austenitic Chromium-Nickel Alloy Steel Pipe for High-Temperature Service
A 409/A 409M	Welded Large Diameter Austenitic Steel Pipe for Corrosive or High-Temperature Service
A 587	Electric-Resistance-Welded Low-Carbon Steel Pipe for the Chemical Industry
A 671	Electric-Fusion-Welded Steel Pipe for Atmospheric and Lower Temperatures
A 672	Electric-Fusion-Welded Steel Pipe for High-Pressure Service at Moderate Temperatures
A 691	Carbon and Alloy Steel Pipe, Electric-Fusion-Welded for High-Pressure Service at High Temperatures

Fittings

A 234/A 234M	Piping Fittings of Wrought Carbon Steel and Alloy Steel for Moderate and Elevated Temperature Services
A 403/A 403M	Wrought Austenitic Stainless Steel Piping Fittings
A 420/A 420M	Piping Fittings of Wrought Carbon Steel and Alloy Steel for Low-Temperature Service

Plate, Sheet, and Strip

A 240/A 240M	Heat-Resistant Chromium and Chromium-Nickel Stainless Steel Plate Sheet and Strip for Pressure Vessels
A 283/A 283M	Low and Intermediate Tensile Strength Carbon Steel Plates
A 285/A 285M	Pressure Vessel Plates, Carbon Steel, Low- and Intermediate-Tensile Strength
A 299/A 299M	Pressure Vessel Plates, Carbon Steel, Manganese-Silicon
A 387/A 387M	Pressure Vessel Plates, Alloy Steel, Chromium-Molybdenum
A 515/A 515M	Pressure Vessel Plates, Carbon Steel for Intermediate- and Higher-Temperature Service
A 516/A 516M	Pressure Vessel Plates, Carbon Steel, for Moderate- and Lower-Temperature Service

Rods, Bars, and Shapes

A 276/A 276M	Stainless Steel Bars and Shapes
A 322	Steel Bars, Alloy, Standard Grades

Rods, Bars, and Shapes (Cont'd)

A 479/A 479M	Stainless Steel Bars and Shapes for Use in Boilers and Other Pressure Vessels
A 564/A 564M	Hot-Rolled and Cold-Finished Age-Hardening Stainless Steel Bars and Shapes
A 575	Steel Bars, Carbon, Merchant Quality, M-Grades
A 576	Steel Bars, Carbon, Hot-Wrought, Special Quality

Structural Components

A 36/A 36M	Structural Steel
A 125	Steel Springs, Helical, Heat Treated
A 229/A 229M	Steel Wire, Oil-Tempered for Mechanical Springs
A 242/A 242M	High-Strength Low Alloy Structural Steel

Castings

B 26/B 26M	Aluminum-Alloy Sand Castings
B 61	Steam or Valve Bronze Castings
B 62	Composition Bronze or Ounce Metal castings
B 108	Aluminum-Alloy Permanent Mold Castings
B 148	Aluminum-Bronze Sand Castings
B 367	Titanium and Titanium Alloy Castings
B 584	Copper Alloy Sand Castings for General Applications

Forgings

B 247 & B 247M	Aluminum and Aluminum-Alloy Die, Hand, and Rolled Ring Forgings
B 283	Copper and Copper-Alloy Die Forgings (Hot Pressed)
B 381	Titanium and Titanium Alloy Forgings
B 462	UNS N06030, UNS N06022, UNS N06200, UNS N08020, UNS N08024, UNS N08026, UNS N08367, UNS N10276, UNS N10665, UNS N10675, UNS R20033 Alloy Pipe Flanges, Forged Fittings and Valves and Parts for Corrosive High-Temperature Service
B 564	Nickel and Alloy Forgings

Seamless Pipe and Tube

B 42	Seamless Copper Pipe, Standard Sizes
B 43	Seamless Red Brass Pipe, Standard Sizes
B 68 & B 68M	Seamless Copper Tube, Bright Annealed
B 75	Seamless Copper Tube
B 88 & B 88M	Seamless Copper Water Tube
B 111 & B 111M	Copper and Copper-Alloy Seamless Condenser Tubes and Ferrule Stock
B 161	Nickel Seamless Pipe and Tube
B 163	Seamless Nickel and Nickel-Alloy Condenser and Heat-Exchanger Tubes
B 165	Nickel-Copper Alloy (UNS N04400) Seamless Pipe and Tube
B 167	Nickel-Chromium-Iron Alloy (UNS N06600, N06601, N06603, N06690, N06025, and N06645) Seamless Pipe and Tube

Copyright ASME International
Provided by IHS under license with ASME
No reproduction or networking permitted without license from IHS
Not for Resale

Table 126.1 Specifications and Standards (Cont'd)

ASTM Ferrous Material Specifications (Cont'd)

Seamless Pipe and Tube (Cont'd)

B 210 & B 210M	Aluminum Alloy Drawn Seamless Tubes
B 234 & B 234M	Aluminum and Aluminum-Alloy Drawn Seamless Tubes for Condensers and Heat Exchangers
B 241 / B 241M	Aluminum-Alloy Seamless Pipe and Seamless Extruded Tube
B 251 & B 251M	General Requirements for Wrought Seamless Copper and Copper-Alloy Tube
B 280	Seamless Copper Tube for Air Conditioning and Refrigeration Field Service
B 302	Threadless Copper Pipe, Standard Sizes
B 315	Seamless Copper Alloy Pipe and Tube
B 407	Nickel-Iron-Chromium Alloy Seamless Pipe and Tube
B 423	Nickel-Iron-Chromium-Molybdenum-Copper Alloy (UNS N08825 and N08821) Seamless Pipe and Tube
B 466 / B 466M	Seamless Copper-Nickel Pipe and Tube
B 677	UNS N08904, UNS N08925, and UNS N08926 Seamless Pipe and Tube
B 729	Seamless UNS N08020, UNS N08026, and UNS N08024 Nickel-Alloy Pipe and Tube
B 861	Titanium and Titanium Alloy Seamless Pipe

Seamless and Welded Pipe and Tube

B 338	Seamless and Welded Titanium and Titanium Alloy Tubes for Condensers and Heat Exchangers

Welded Pipe and Tube

B 464	Welded (UNS N08020, N08024, N08026 Alloy) Pipe
B 467	Welded Copper-Nickel Pipe
B 468	Welded (UNS N08020, N08024, N08026) Alloy Tubes
B 547	Aluminum and Aluminum-Alloy Formed and Arc-Welded Round Tube
B 603	Welded Copper-Alloy Pipe
B 673	UNS N08904, UNS N08925, and UNS N08926 Welded Pipe
B 674	UNS N08904, UNS N08925, and UNS N08926 Welded Tube
B 862	Titanium and Titanium Alloy Welded Pipe

Fittings

B 361	Factory-Made Wrought Aluminum and Aluminum-Alloy Welding Fittings
B 366	Factory-Made Wrought Nickel and Nickel Alloy Fittings

Plate, Sheet, and Strip

B 168	Nickel-Chromium-Iron Alloys (UNS N06600, N06601, N06603, N06690, N06025, N06045) Plate, Sheet, and Strip
B 209/B 209M	Aluminum and Aluminum-Alloy Sheet and Plate
B 265	Titanium and Titanium-Alloy Strip, Sheet, and Plate
B 402	Copper-Nickel Alloy Plate and Sheet for Pressure Vessels
B 409	Nickel-Iron-Chromium Alloy Plate, Sheet, and Strip
B 424	Ni-Fe-Cr-Mo-Cu Alloy (UNS N08825 and N08221) Plate, Sheet, and Strip
B 463	UNS N08020, UNS N08026 and UNS N08024 Alloy Plate, Sheet, and Strip
B 625	UNS N08904, UNS N08925, and UNS N08031, UNS N08932, UNS N08926, and UNS R20033 Plate, Sheet, and Strip

Rods, Bars, and Shapes

B 150&B 150M	Aluminum Bronze Rod, Bar, and Shape
B 151&B 151M	Copper-Nickel-Zinc Alloy (Nickel Silver) and Copper-Nickel Rod and Bar
B 221&B 221M	Aluminum and Aluminum Alloy Extruded Bars, Rods, Wire, Profiles, and Tubes
B 348	Titanium and Titanium Alloy Bars and Billets
B 408	Nickel-Iron-Chromium Alloy Rod and Bar
B 425	Ni-Fe-Cr-Mo-Cu Alloy (UNS N08825 and N08221) Rod and Bar
B 473	UNS N08020, UNS N08024, and UNS N08026 Nickel Alloy Bar and Wire
B 649	Ni-Fe-Cr-Mo-Cu Low-Carbon Alloy (N08904), Ni-Fe-Cr-Mo-Cu-N Low Carbon Alloys (UNS N08925, UNS N08031, and UNS N08926), and Cr-Ni-Fe-N Low-Carbon Alloy (UNS R20033) Bar and Wire

Solder

B 32	Solder Metal
B 828	Standard Practice for Making Capillary Joints by Soldering of Copper and Copper Alloy Tube and Fittings

Copyright ASME International
Provided by IHS under license with ASME
No reproduction or networking permitted without license from IHS
Not for Resale

Table 126.1 Specifications and Standards (Cont'd)

API Specifications

Seamless and Welded Pipe

5L	Line Pipe

American National Standards

B1.20.3	Dryseal Pipe Threads (Inch)
B16.18	Cast Copper Alloy Solder-Joint Pressure Fittings
B18.22M	Washers, Metric Plain
Z223.1	National Fuel Gas Code (ANSI/NFPA 54)

MSS Standard Practices

SP-6	Standard Finishes for Contact Faces of Pipe Flanges and Connecting-End Flanges of Valves and Fittings
SP-9	Spot-Facing for Bronze, Iron & Steel Flanges
SP-25	Standard Marking System for Valves, Fittings, Flanges and Unions
SP-42[1]	Class 150 Corrosion Resistant Gate, Globe, Angle and Check Valves With Flanged and Buttweld Ends
SP-43	Wrought Stainless Steel Butt-Welding Fittings
SP-45	Bypass & Drain Connection
SP-51	Class 150 LW Corrosion Resistant Cast Flanges and Flanged Fittings
SP-53	Quality Standard for Steel Castings and Forgings for Valves, Flanges, and Fittings and Other Piping Components — Magnetic Particle Examination Method
SP-54	Quality Standard for Steel Castings and Forgings for Valves, Flanges, and Fittings and Other Piping Components — Radiographic Examination Method
SP-55	Quality Standard for Steel Castings and Forgings for Valves, Flanges, and Fittings and Other Piping Components — Visual Method for Evaluation of Surface Irregularities
SP-58	Pipe Hangers & Supports, Materials, Design, and Manufacture
SP-61	Hydrostatic Testing Steel Valves
SP-67[1]	Butterfly Valves
SP-69	Pipe Hangers & Supports — Selection and Application
SP-75	Specification for High Test Wrought Butt-Welding Fittings
SP-79	Socket Welding Reducer Inserts
SP-80	Bronze Gate, Globe, Angle & Check Valve
SP-89	Pipe Hangers and Supports — Fabrication and Installation Practices
SP-93	Quality Standard for Steel Castings and Forgings for Valves, Flanges, and Fittings and Other Piping Components — Liquid Penetrant Examination Method
SP-94	Quality Standard for Steel Castings and Forgings for Valves, Flanges, and Fittings and Other Piping Components — Ultrasonic Examination Method
SP-95	Swage (d) Nipples and Boll Plugs
SP-97	Integrally Reinforced Forged Branch Outlet Fittings — Socket Welding, Threaded and Butt-welding Ends
SP-105	Instrument Valves for Code Applications

ASME Codes & Standards

. . .	ASME Boiler and Pressure Vessel Code
B1.1	Unified Inch Screw Threads
B1.13M	Metric Screw Threads — M Profile
B1.20.1	Pipe Threads, General Purpose (Inch)
B16.1	C.I. Pipe Flanges and Flanged Fittings — 25, 125, 250 & 800 Classes
B16.3	M.I. Thd. Fittings
B16.4	G.I. Thd. Fittings
B16.5	Pipe Flanges & Flanged Fittings
B16.9	Wrought Steel Butt Welding Fittings
B16.10	Face-to-Face and End-to-End Dimensions of Valves
B16.11	Forged Steel Fittings, S.W. & Threaded
B16.14	Ferrous Plugs, Bushings & Locknuts With Pipe Threads
B16.15	Cast Bronze Threaded Fittings, Classes 125 and 250
B16.20	Metallic Gaskets for Pipe Flanges — Ring Joint, Spiral Wound, & Jacketed
B16.21	Non-Metallic Flat Gaskets for Pipe Flanges
B16.22	Wrought Copper & Copper Alloy Solder Joint Pressure Fittings
B16.24	Cast Copper Alloy Pipe Flanges & Flanged Fittings — Class 150, 300, 400, 600, 900, 1500, and 2500
B16.25	Butt Welding Ends
B16.28	Wrought Steel Butt Welding Short Radius Elbows and Returns
B16.34	Valves — Flanged, Threaded, and Welding End
B16.42	Ductile Iron Pipe Flanges and Flanged Fittings — Classes 150 and 300
B16.47	Large Diameter Steel Flanges
B16.48	Steel Line Blanks
B18.2.1	Square and Hex Bolts and Screws - Inch Series

Copyright ASME International
Provided by IHS under license with ASME
No reproduction or networking permitted without license from IHS
Not for Resale

Table 126.1 Specifications and Standards (Cont'd)

ASME Codes & Standards (Cont'd)

B18.2.2	Square and Hex Nuts (Inch Series)	B31.8	Gas Transmission & Distribution Piping Systems
B18.2.4.6M	Hex Nuts, Heavy, Metric	B36.10M	Welded and Seamless Wrought Steel Pipe
B18.2.3.5M	Metric Hex Bolts	B36.19M	Stainless Steel Pipe
B18.2.3.6M	Metric Heavy Hex Bolts	TDP-1	Recommended Practices for the Prevention of Water Damage to Steam Turbines Used for Electric Power Generation — Fossil Fueled Plants
B18.21.1	Lock Washers (Inch Series)		
B18.22.1[2]	Plain Washers		
B31.3	Process Piping		
B31.4	Liquid Transportation Systems for Hydrocarbons, Liquid Petroleum Gas, Anhydrous Ammonia, and Alcohols		

ASNT Specifications

CP-189	ASNT Standard for Qualification and Certification of Nondestructive Testing Personnel	SNT-TC-1A	Personnel Qualification and Certification in Nondestructive Testing

AWS Specifications

A3.0	Standard Welding Terms and Definitions
QC1	Qualification and Certification of Welding Inspectors

AWWA and ANSI/AWWA Standards

C110/A21.10	Ductile-Iron and Gray-Iron Fittings, 3 in. Through 48 in. (76 mm Through 1200 mm), for Water and Other Liquids	C300	Reinforced Concrete Pressure Pipe, Steel-Cylinder Type, for Water and Other Liquids (Includes Addendum C300a-93.)
C111/A21.11	Rubber-Gasket Joints for Ductile-Iron Pressure Pipe and Fittings	C301	Prestressed Concrete Pressure Pipe, Steel-Cylinder Type, for Water and Other Liquids
C115/A21.15	Flanged Ductile-Iron Pipe With Threadead Flanges	C302	Reinforced Concrete Pressure Pipe, Noncylinder Type, for Water and Other Liquids
C150/A21.50	Thickness Design of Ductile-Iron Pipe	C304	Design of Prestressed Concrete Cylinder Pipe
C151/A21.51	Ductile-Iron Pipe, Centrifugally Cast, for Water	C500	Metal-Seated Gate Valves for Water Supply Service
C151/A21.53	Ductile-Iron Compact Fittings, 3 in. Through 24 in. (76 mm Through 610 mm) and 54 in. Through 64 in. (1,400 mm Through 1,600 mm), for Water Service	C504[1]	Rubber Seated Butterfly Valves
		C509	Resilient-Seated Gate Valves for Water Supply Service
C200	Steel Water Pipe—6 in. (150 mm) and Larger	C600	Installation of Ductile-Iron Water Mains and Their Appurtenances
C207	Steel Pipe Flanges for Waterworks Service—Sizes 4 in. Through 144 in. (100 mm Through 3,600 mm)	C606	Grooved and Shouldered Joints
C208	Dimensions for Fabricated Steel Water Pipe Fittings		

National Fire Codes

NFPA 8503	Standard for Pulverized Fuel Systems
NFPA 1963	Screw Threads and Gaskets for Fire Hose Connections

PFI Standards

ES-16	Access Holes and Plugs for Radiographic Inspection of Pipe Welds

--`,,```,,,,````-`-`,,`,,`,`,,`---

Copyright ASME International
Provided by IHS under license with ASME
No reproduction or networking permitted without license from IHS

Not for Resale

Table 126.1 Specifications and Standards (Cont'd)

GENERAL NOTES:

(a) For boiler external piping application, see para. 123.2.2.

(b) For all other piping, materials conforming to an ASME SA or SB specification may be used interchangeably with material specified to an ASTM A or B specification of the same number listed in Table 126.1.

(c) The approved year of issue of the specifications and standards is not given in this Table. This information is given in Appendix F of this Code.

(d) The addresses and phone numbers of organizations whose specifications and standards are listed in this Table are given at the end of Appendix F.

(e) Abbreviations which are used in this Table are:

B.W.	Butt welding	H.T.	High temperature	S.W.	Socket welding
C.I.	Cast iron	L.T.	Low temperature	Temp.	Temperature
Engr.	Engineering	M.I.	Malleable iron	Thd.	Threaded
Gen.	General	Serv.	Service(s)	T.S.	Tensile strength
G.I.	Gray iron	S.S.	Stainless steel		

NOTES:

(1) See para. 107.1(D) for valve stem retention requirements.

(2) ANSI B18.22.1 is nonmetric.

--`,,```,,,,````-`-`,,`,,`,`,,`---

Copyright ASME International
Provided by IHS under license with ASME
No reproduction or networking permitted without license from IHS

Not for Resale

Chapter V
Fabrication, Assembly, and Erection

127 WELDING

127.1 General

Piping systems shall be constructed in accordance with the requirements of this Chapter and of materials that have been manufactured in accordance with the requirements of Chapter IV. These requirements apply to all fabrication, assembly, and erection operations, whether performed in a shop or at a construction site. The following applies essentially to the welding of ferrous materials. The welding of aluminum, copper, etc., requires different preparations and procedures.

127.1.1 The welding processes that are to be used under this part of this Code shall meet all the test requirements of Section IX of the ASME Boiler and Pressure Vessel Code.

(04) **127.2 Material**

127.2.1 Electrodes and Filler Metal. Welding electrodes and filler metal, including consumable inserts, shall conform to the requirements of the ASME Boiler and Pressure Vessel Code, Section II, Part C. An electrode or filler metal not conforming to the above may be used provided the WPS and the welders and welding operators who will follow the WPS have been qualified as required by ASME Section IX. Unless otherwise specified by the designer, welding electrodes and filler metals used shall produce weld metal that complies with the following:

(A) The nominal tensile strength of the weld metal shall equal or exceed the minimum specified tensile strength of the base metals being joined.

(B) If base metals of different tensile strengths are to be joined, the nominal tensile strength of the weld metal shall equal or exceed the minimum specified tensile strength of the weaker of the two.

(C) The nominal chemical analysis of the weld metal shall be similar to the nominal chemical analysis of the major alloying elements of the base metal (e.g. $2\frac{1}{4}$% Cr, 1% Mo steels should be joined using $2\frac{1}{4}$% Cr, 1% Mo filler metals). See also para. 124.2(D)..

(D) If base metals of different chemical analysis are being joined, the nominal chemical analysis of the weld metal shall be similar to either base metal or an intermediate composition, except as specified below for austenitic steels joined to ferritic steels.

(E) When austenitic steels are joined to ferritic steels, the weld metal shall have an austenitic structure.

(F) For nonferrous metals, the weld metal shall be that recommended by the manufacturer of the nonferrous metal or by industry associations for that metal.

(G) For unusual materials or combinations of materials, the design engineer shall specify the weld metal that is required. In addition, when a base metal is selected primarily for its corrosion resistance, and the media is aggressive towards the material, the use of weld metal that is electrochemically more noble than the base metal is recommended to ensure that selective corrosion of the weld metal does not occur (e.g., when using type 316L base metal in a strong acid, the use of 317L weld metal is preferred.)

127.2.2 Backing Rings. Backing rings, when used, shall conform to the following requirements:

(A) Ferrous Rings. Ferrous metal backing rings that become a permanent part of the weld shall be made from material of weldable quality, compatible with the base material and the sulfur content shall not exceed 0.05%.

(A.1) Backing rings may be of the continuous machined or split band type.

(A.2) If two abutting surfaces are to be welded to a third member used as a backing ring and one or two of the three members are ferritic and the other member or members are austenitic, the satisfactory use of such materials shall be determined by the WPS qualified as required in para. 127.5.

(A.3) Backing strips used at longitudinal welded joints shall be removed.

(B) Nonferrous and Nonmetallic Rings. Backing rings of nonferrous or nonmetallic materials may be used for backing provided they are included in a WPS as required in para. 127.5. Nonmetallic or nonfusing rings shall be removed.

127.2.3 Consumable Inserts. Consumable inserts may be used provided they are made from material compatible with the chemical and physical properties of the base material. Qualification of the WPS shall be as required by para. 127.5.

127.3 Preparation for Welding

(A) End Preparation

(A.1) Oxygen or arc cutting is acceptable only if the cut is reasonably smooth and true, and all slag is cleaned from the flame cut surfaces. Discoloration that

Copyright ASME International
Provided by IHS under license with ASME
No reproduction or networking permitted without license from IHS
Not for Resale

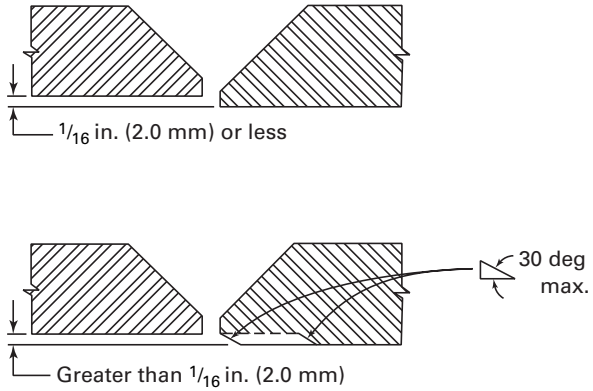

Fig 127.3 Butt Welding of Piping Components With Internal Misalignment

may remain on the flame cut surface is not considered to be detrimental oxidation.

(A.2) Butt-welding end preparation dimensions contained in ASME B16.25 or any other end preparation which meets the WPS are acceptable.

(A.3) If piping component ends are bored, such boring shall not result in the finished wall thickness after welding less than the minimum design thickness. Where necessary, weld metal of the appropriate analysis may be deposited on the inside or outside of the piping component to provide sufficient material for machining to insure satisfactory fitting of rings.

(A.4) If the piping component ends are upset, they may be bored to allow for a completely recessed backing ring, provided the remaining net thickness of the finished ends is not less than the minimum design thickness.

(B) Cleaning. Surfaces for welding shall be clean and shall be free from paint, oil, rust, scale, or other material which is detrimental to welding.

(C) Alignment. The inside diameters of piping components to be butt welded shall be aligned as accurately as is practicable within existing commercial tolerances on diameters, wall thicknesses, and out-of-roundness. Alignment shall be preserved during welding. The internal misalignment of the ends to be joined shall not exceed $\frac{1}{16}$ in. (2.0 mm) unless the piping design specifically states a different allowable misalignment.

When the internal misalignment exceeds the allowable, it is preferred that the component with the wall extending internally be internally trimmed per Fig. 127.3. However, trimming shall result in a piping component thickness not less than the minimum design thickness and the change in contour shall not exceed 30 deg (see Fig. 127.3).

(D) Spacing. The root opening of the joint shall be as given in the WPS.

(E) Socket Weld Assembly. In assembly of the joint before welding, the pipe or tube shall be inserted into the socket to the maximum depth and then withdrawn approximately $\frac{1}{16}$ in. (2.0 mm) away from contact between the end of the pipe and the shoulder of the socket [see Figs. 127.4.4(B) and (C)]. In sleeve-type joints without internal shoulder, there shall be a distance of approximately $\frac{1}{16}$ in. (2.0 mm) between the butting ends of the pipe or tube.

The fit between the socket and the pipe shall conform to applicable standards for socket weld fittings and in no case shall the inside diameter of the socket or sleeve exceed the outside diameter of the pipe or tube by more than 0.080 in. (2.0 mm).

127.4 Procedure

127.4.1 General

(A) Qualification of the WPS to be used, and of the performance of welders and operators, is required, and shall comply with the requirements of para. 127.5.

(B) No welding shall be done if there is impingement of rain, snow, sleet, or high wind on the weld area.

(C) Tack welds permitted to remain in the finished weld shall be made by a qualified welder. Tack welds made by an unqualified welder shall be removed. Tack welds which remain shall be made with an electrode and WPS which is the same as or equivalent to the electrode and WPS to be used for the first pass. The stopping and starting ends shall be prepared by grinding or other means so that they can be satisfactorily incorporated into the final weld. Tack welds which have cracked shall be removed.

(D) CAUTION: Arc strikes outside the area of the intended weld should be avoided on any base metal.

127.4.2 Girth Butt Welds

(A) Girth butt welds shall be complete penetration welds and shall be made with a single vee, double vee, or other suitable type of groove, with or without backing rings or consumable inserts. The depth of the weld measured between the inside surface of the weld preparation and the outside surface of the pipe shall not be less than the minimum thickness required by Chapter II for the particular size and wall of pipe used.

(B) In order to avoid abrupt transitions in the contour of the finished weld, the requirements of (B.1) through (B.4) below shall be met.

(B.1) When components with different outside diameters or wall thicknesses are welded together, the welding end of the component with the larger outside diameter shall fall within the envelope defined by solid lines in Fig. 127.4.2. The weld shall form a gradual transition not exceeding a slope of 30 deg from the smaller to the larger diameter component. This condition may be met by adding welding filler material, if necessary, beyond what would otherwise be the edge of the weld.

(B.2) When both components to be welded (other than pipe to pipe) have a transition from a thicker section to the weld end preparation, the included angle between

Copyright ASME International
Provided by IHS under license with ASME
No reproduction or networking permitted without license from IHS
Not for Resale

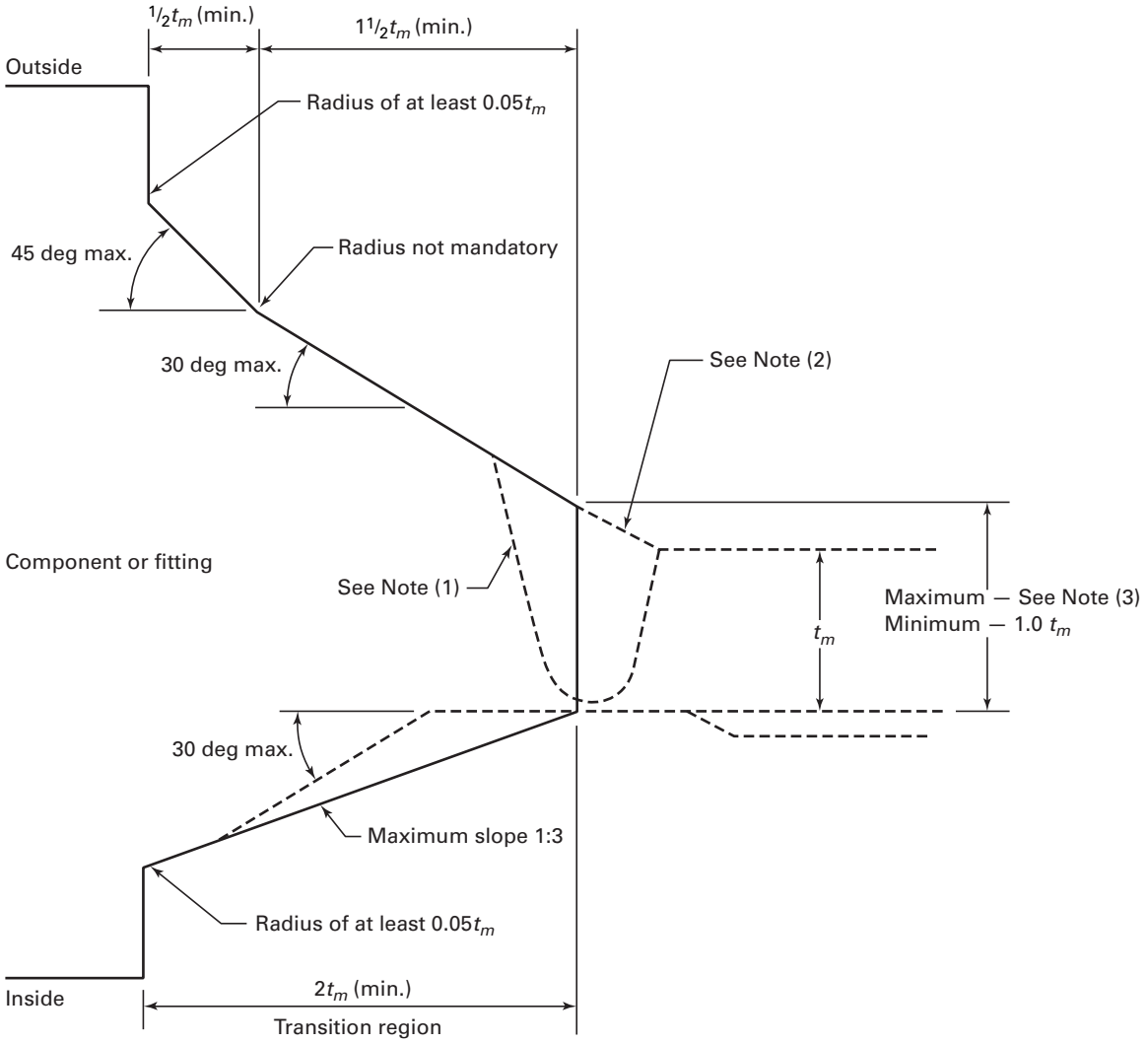

GENERAL NOTES:

(a) The value of t_m is whichever of the following is applicable:
  (1) as defined in para. 104.1.2(A);
  (2) the minimum ordered wall thickness of the cylindrical welding end of a component or fitting (or the thinner of the two) when the joint is between two components.

(b) The maximum envelope is defined by solid lines.

NOTES:

(1) Weld is shown for illustration only.

(2) The weld transition and weld reinforcement shall comply with paras. 127.4.2(B) and (C.2) and may be outside the maximum envelope.

(3) The maximum thickness at the end of the component is:
  (a) the greater of (t_m + 0.15 in.) or 1.15t_m when ordered on a minimum wall basis;
  (b) the greater of (t_m + 0.15 in.) or 1.10t_{nom} when ordered on a nominal wall basis.

Fig. 127.4.2 Welding End Transition — Maximum Envelope

Copyright ASME International
Provided by IHS under license with ASME
No reproduction or networking permitted without license from IHS
Not for Resale

Table 127.4.2 Reinforcement of Girth and Longitudinal Butt Welds

Thickness of Base Metal, in. (mm)	Maximum Thickness of Reinforcement for Design Temperature					
	> 750°F (400°C)		350°F–750°F (175°C–400°C)		< 350°F (175°C)	
	in.	mm	in.	mm	in.	mm
Up to 1/8 (3.0), incl.	1/16	2.0	3/32	2.5	3/16	5.0
Over 1/8 to 3/16 (3.0 to 5.0), incl.	1/16	2.0	1/8	3.0	3/16	5.0
Over 3/16 to 1/2 (5.0 to 13.0), incl.	1/16	2.0	5/32	4.0	3/16	5.0
Over 1/2 to 1 (13.0 to 25.0), incl.	3/32	2.5	3/16	5.0	3/16	5.0
Over 1 to 2 (25.0 to 50.0), incl.	1/8	3.0	1/4	6.0	1/4	6.0
Over 2 (50.0)	5/32	4.0	The greater of 1/4 in. (6 mm) or 1/8 times the width of the weld in inches (millimeters).			

GENERAL NOTES:
(a) For double welded butt joints, this limitation on reinforcement given above shall apply separately to both inside and outside surfaces of the joint.
(b) For single welded butt joints, the reinforcement limits given above shall apply to the outside surface of the joint only.
(c) The thickness of weld reinforcement shall be based on the thickness of the thinner of the materials being joined.
(d) The weld reinforcement thicknesses shall be determined from the higher of the abutting surfaces involved.
(e) Weld reinforcement may be removed if so desired.

the surface of the weld and the surface of either of the components shall not be less than 150 deg. Refer to para. 119.3(B) for additional concerns related to this design.

(B.3) When welding pipe to pipe, the surface of the weld shall, as a minimum, be flush with the outer surface of the pipe, except as permitted in para. 127.4.2(B.4).

(B.4) For welds made without the addition of filler metal, concavity shall be limited to 1/32 in. (1 mm) below the outside surface of the pipe, but shall not encroach upon minimum required thickness.

(C) As-welded surfaces are permitted; however, the surface of welds shall be sufficiently free from coarse ripples, grooves, overlaps, abrupt ridges, and valleys to meet the following.

(C.1) The surface condition of the finished welds shall be suitable for the proper interpretation of radiographic and other nondestructive examinations when nondestructive examinations are required by Table 136.4. In those cases where there is a question regarding the surface condition on the interpretation of a radiographic film, the film shall be compared to the actual weld surface for interpretation and determination of acceptability.

(C.2) Reinforcements are permitted in accordance with Table 127.4.2.

(C.3) Undercuts shall not exceed 1/32 in. (1.0 mm) and shall not encroach on the minimum required section thickness.

(C.4) If the surface of the weld requires grinding to meet the above criteria, care shall be taken to avoid reducing the weld or base material below the minimum required thickness.

(C.5) Concavity on the root side of a single welded circumferential butt weld is permitted when the resulting thickness of the weld is at least equal to the thickness of the thinner member of the two sections being joined and the contour of the concavity is smooth without sharp edges. The internal condition of the root surface of a girth weld, which has been examined by radiography, is acceptable only when there is a gradual change in the density, as indicated in the radiograph. If a girth weld is not designated to be examined by radiography, a visual examination may be performed at welds which are readily accessible.

127.4.3 Longitudinal Butt Welds. Longitudinal butt welds not covered by the applicable material specifications listed in Table 126.1 shall meet the requirements for girth butt welds in para. 127.4.2.

127.4.4 Fillet Welds. In making fillet welds, the weld metal shall be deposited in such a way as to secure adequate penetration into the base metal at the root of the weld.

Fillet welds may vary from convex to concave. The size of a fillet weld is determined as shown in Fig. 127.4.4(A). Typical minimum fillet weld details for slip-on flanges and socket-welding components are shown in Figs. 127.4.4(B) and (C).

127.4.5 Seal Welds. Where seal welding of threaded joints is performed, threads shall be entirely covered by the seal weld. Seal welding shall be done by qualified welders.

127.4.8 Welded Branch Connections

(A) Welded branch connections shall be made with full penetration welds, except as allowed in para. 127.4.8(F). Figures 127.4.8(A), (B), and (C) show typical

Copyright ASME International
Provided by IHS under license with ASME
No reproduction or networking permitted without license from IHS
Not for Resale

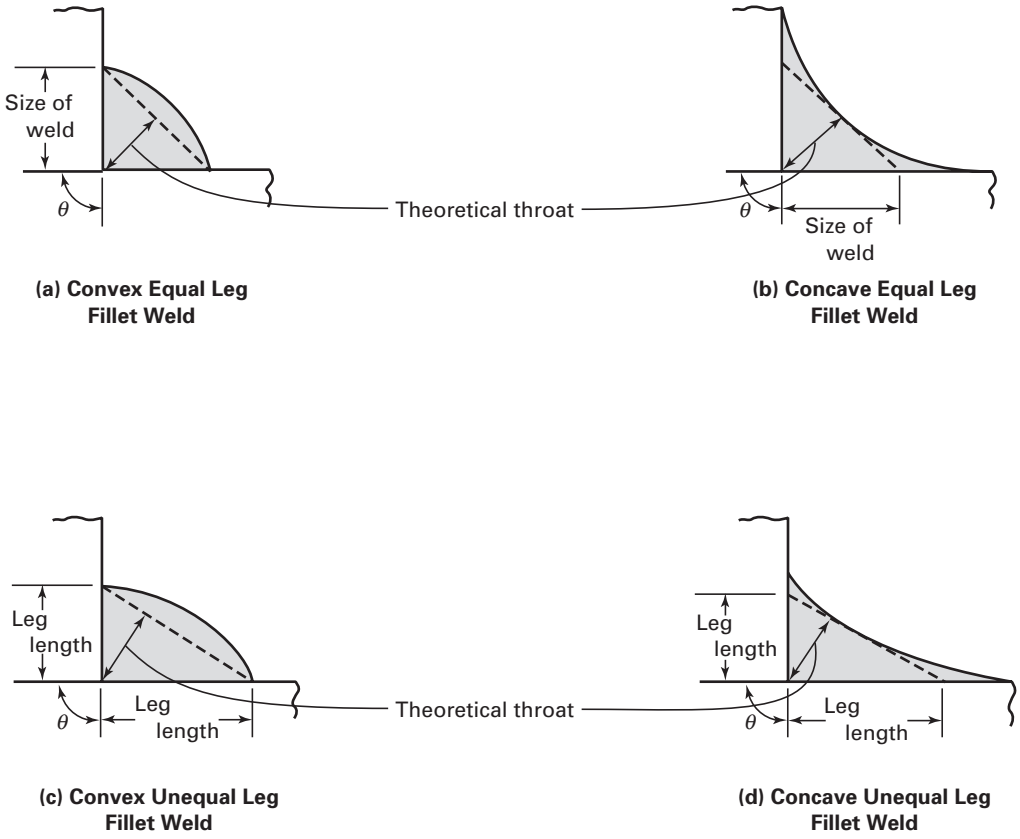

(a) Convex Equal Leg Fillet Weld

(b) Concave Equal Leg Fillet Weld

(c) Convex Unequal Leg Fillet Weld

(d) Concave Unequal Leg Fillet Weld

GENERAL NOTES:

(a) The "size" of an equal leg fillet weld shall be described by the leg length of the largest inscribed isoceles triangle.

(b) The "size" of an unequal leg fillet weld shall be described using both leg lengths and their location on the members to be joined.

(c) Angle θ, as noted in the above figures, may vary from the 90 deg angle as shown based on the angle between the surfaces to be welded.

(d) For an equal leg fillet weld where the angle θ between the members being joined is 90 deg, the theoretical throat shall be 0.7 $\times$ leg length. For other fillet welds, the theoretical throat shall be based on the leg lengths and the angle θ between the members to be joined.

(e) For all fillet welds, particularly unequal leg fillet welds with angle θ less than 90 deg, the theoretical throat shall lie within the cross section of the deposited weld metal and shall not be less than the minimum distance through the weld.

Fig. 127.4.4(A) Fillet Weld Size

details of branch connections with and without added reinforcement. No attempt has been made to show all acceptable types of construction and the fact that a certain type of construction is illustrated does not indicate that it is recommended over other types not illustrated.

(B) Figure 127.4.8(D) shows basic types of weld attachments used in the fabrication of branch connections. The location and minimum size of these attachment welds shall conform to the requirements of para. 127.4.8. Welds shall be calculated in accordance with para. 104.3.1 but shall not be less than the sizes shown in Fig. 127.4.8(D).

The notations and symbols used in this paragraph and in Fig. 127.4.8(D) are as follows:

t_c = the smaller of $\frac{1}{4}$ in. (6.0 mm) or $0.7t_{nb}$

t_{nr} = nominal thickness of reinforcing element (ring or saddle), in. (mm)

t_{min} = the smaller of t_{nb} or t_{nr}

t_{nb} = nominal thickness of branch wall, in. (mm)

t_{nh} = nominal thickness of header wall, in. (mm)

(C) Figure 127.4.8(E) shows branch connections made by welding half couplings or adapters directly to the run pipe.

Copyright ASME International
Provided by IHS under license with ASME
No reproduction or networking permitted without license from IHS Not for Resale

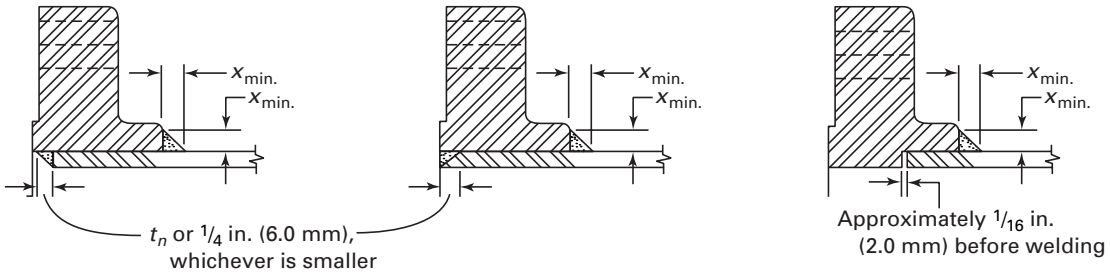

(a) Front and Back Weld [See Notes (1) and (2)]

(b) Face and Back Welds [See Notes (1) and (2)]

(c) Socket Welding Flange [See Notes (2) and (3)]

t_n = = nominal pipe wall thickness
$x_{min.}$ = $1.4t_n$ or thickness of the hub, whichever is smaller

NOTES:
(1) Refer to para. 122.1.1(F) for limitations of use.
(2) Refer to para. 104.5.1 for limitations of use.
(3) Refer to para. 122.1.1(H) for limitations of use.

Fig. 127.4.4(B) Welding Details for Slip-On and Socket-Welding Flanges; Some Acceptable Types of Flange Attachment Welds

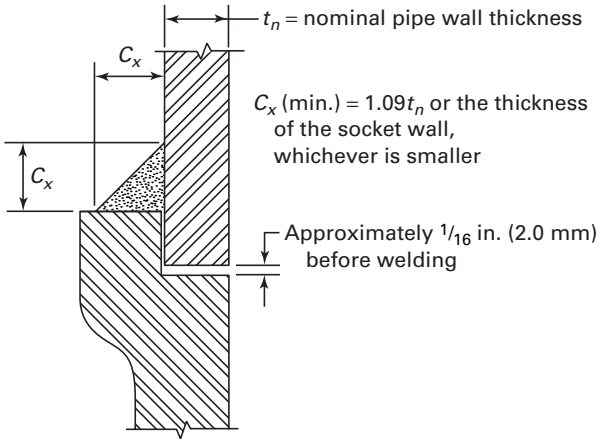

Fig. 127.4.4(C) Minimum Welding Dimensions Required for Socket Welding Components Other Than Flanges

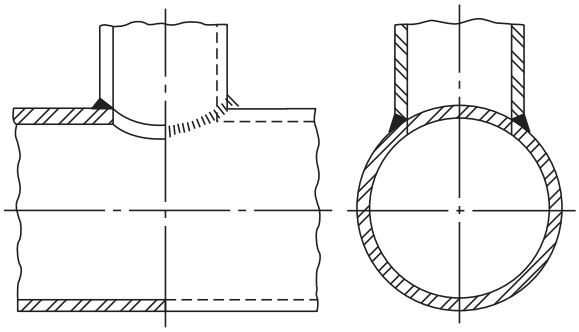

Fig. 127.4.8(A) Typical Welded Branch Connection Without Additional Reinforcement

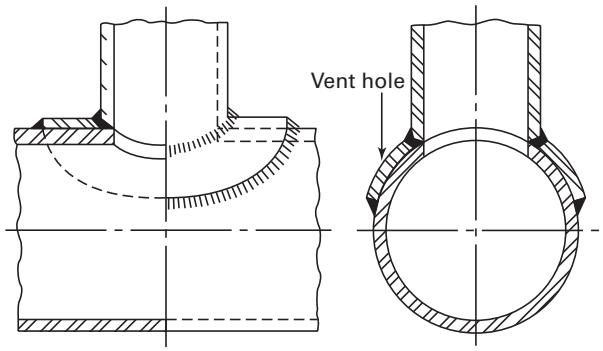

Fig. 127.4.8(B) Typical Welded Branch Connection With Additional Reinforcement

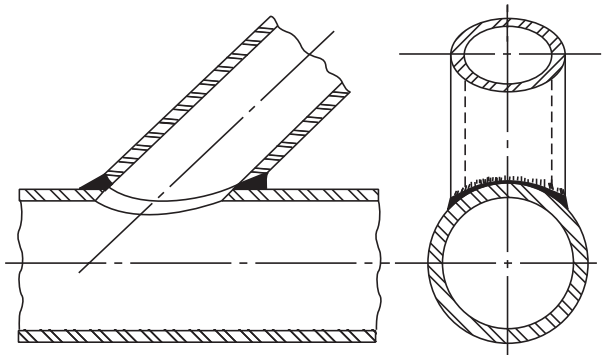

Fig. 127.4.8(C) Typical Welded Angular Branch Connection Without Additional Reinforcement

Copyright ASME International
Provided by IHS under license with ASME
No reproduction or networking permitted without license from IHS
Not for Resale

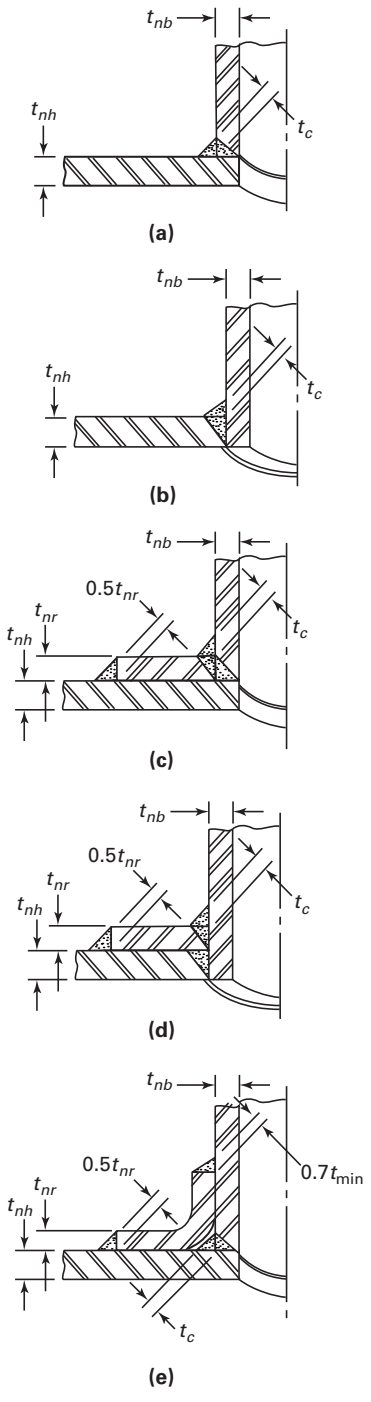

GENERAL NOTE: Weld dimensions may be larger than the minimum values shown here.

Fig. 127.4.8(D) Some Acceptable Types of Welded Branch Attachment Details Showing Minimum Acceptable Welds

These branch connections and specially made integrally reinforced branch connection fittings which abut the outside surface of the run wall, or which are inserted through an opening cut in the run wall, shall have opening and branch contour to provide a good fit and shall be attached by means of full penetration groove welds except as otherwise permitted in (F) below.

The full penetration groove welds shall be finished with cover fillet welds and meet the requirements of para. 104. The cover fillet welds shall have a minimum throat dimension not less than that shown in Fig. 127.4.8(E).

(D) In branch connections having reinforcement pads or saddles, the reinforcement shall be attached by welds at the outer edge and at the branch periphery as follows:

(D.1) If the weld joining the added reinforcement to the branch is a full penetration groove weld, it shall be finished with a cover fillet weld having a minimum throat dimension not less than t_c; the weld at the outer edge, joining the added reinforcement to the run, shall be a fillet weld with a minimum throat dimension of $0.5t_{nr}$.

(D.2) If the weld joining the added reinforcement to the branch is a fillet weld, the throat dimension shall not be less than $0.7t_{min}$. The weld at the outer edge joining the outer reinforcement to the run shall also be a fillet weld with a minimum throat dimension of $0.5t_{nr}$.

(E) When rings or saddles are used, a vent hole shall be provided (at the side and not at the crotch) in the ring or saddle to reveal leakage in the weld between branch and main run and to provide venting during welding and heat treating operations. Rings or saddles may be made in more than one piece if the joints between the pieces have strength equivalent to ring or saddle parent metal and if each piece is provided with a vent hole. A good fit shall be provided between reinforcing rings or saddles and the parts to which they are attached.

(F) Branch connections NPS 2 and smaller which do not require reinforcements (see para. 104.3) may be constructed as shown in Fig. 127.4.8(F). The groove welds shall be finished with cover fillet welds with a minimum throat dimension not less than that shown in Fig. 127.4.8(F). This construction shall not be used at design temperatures greater than 750°F (400°C) nor at design pressures greater than 1,025 psi (7 100 kPa).

127.4.9 Attachment Welds. Structural attachments may be made by complete penetration, partial penetration, or fillet welds.

(A) Low energy capacitor discharge welding may be used for the welding of temporary attachments directly to pressure parts, provided that they be removed prior to subjecting the piping system to operating pressure or temperature. After their removal, the affected areas shall be examined in accordance with para. 136.4. Performance and procedure qualifications are not required.

This method of welding may also be used for the permanent attachment of nonstructural items, such as

Copyright ASME International
Provided by IHS under license with ASME
No reproduction or networking permitted without license from IHS
Not for Resale

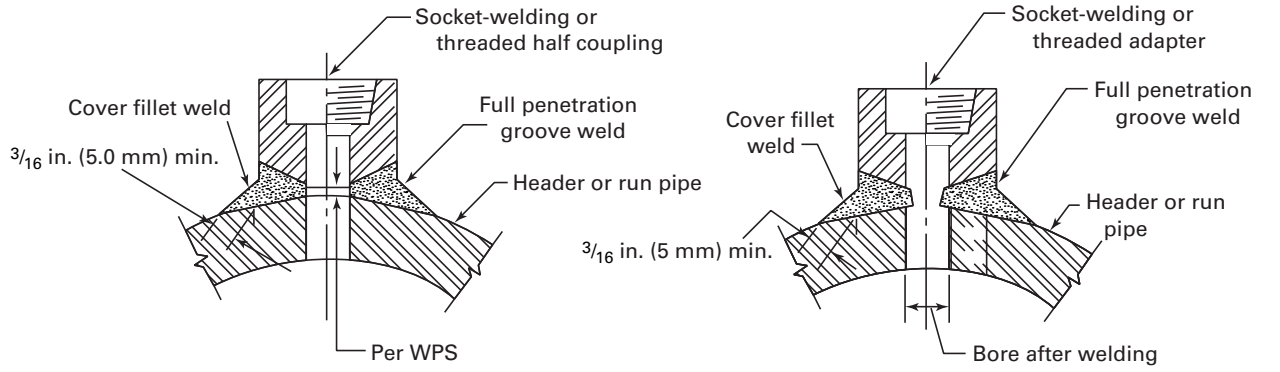

(a) Branch Connection Using ASME B16.11 Forged Steel Socket-Welding or Threaded Half Coupling [See Note (1)]

(b) Branch Connection Using Forged Steel Socket-Welding or Threaded Adapter for Pressure and Temperature Conditions Greater Than Permitted for ASME B16.11 Forged Steel Fittings

NOTE:
(1) Refer to para. 104.3.1(C.2) for branch connections not requiring reinforcement calculations.

Fig. 127.4.8(E) Typical Full Penetration Weld Branch Connections for NPS 3 and Smaller Half Couplings or Adapters

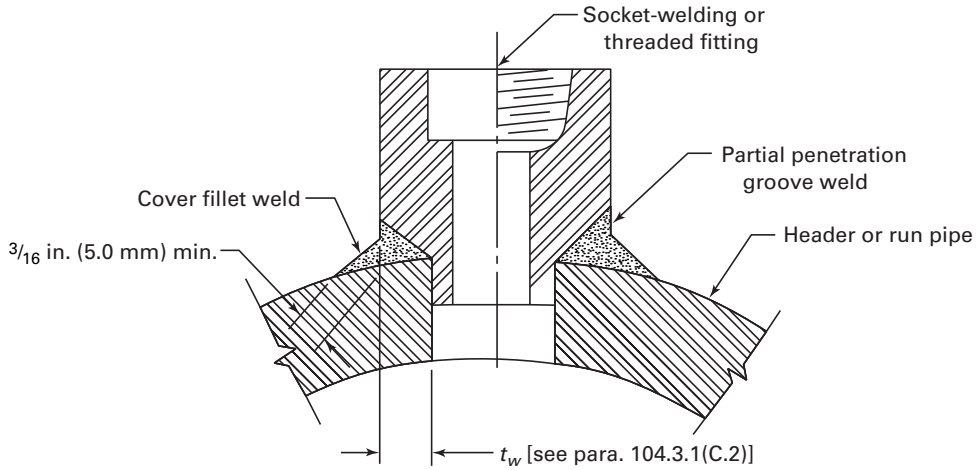

Fig. 127.4.8(F) Typical Partial Penetration Weld Branch Connection for NPS 2 and Smaller Fittings

strain gages or thermocouples, provided that

(A.1) a welding procedure specification is prepared describing the capacitor discharge equipment, the materials to be joined, and the techniques of application; the qualification of the procedure is not required

(A.2) the minimum thickness of the material to which the attachment is to be made is 0.090 in. (2.3 mm)

(A.3) the power input is limited to less than 125 W-sec

127.4.10 Heat Treatment. Preheat and postweld heat treatment for welds shall be in accordance with para. 131 or 132 as applicable.

127.4.11 Repair Welding

(A) Defect Removal. All defects in welds or base materials requiring repair shall be removed by flame or arc gouging, grinding, chipping, or machining. Preheating may be required for flame or arc gouging on certain alloy materials of the air hardening type in order to prevent surface checking or cracking adjacent to the flame or arc gouged surface. When a defect is removed but welding repair is unnecessary, the surface shall be contoured to eliminate any sharp notches or corners. The contoured surface shall be reinspected by the same means originally used for locating the defect.

Copyright ASME International
Provided by IHS under license with ASME
No reproduction or networking permitted without license from IHS
Not for Resale

(B) Repair Welds. Repair welds shall be made in accordance with a WPS using qualified welders or welding operators (see para. 127.5), recognizing that the cavity to be repair welded may differ in contour and dimension from a normal joint preparation and may present different restraint conditions. The types, extent, and methods of examination shall be in accordance with Table 136.4. For repairs to welds the minimum examination shall be the same method that revealed the defect in the original weld. For repairs to base material, the minimum examination shall be the same as required for butt welds.

127.5 Qualification

127.5.1 General. Qualification of the WPS to be used, and of the performance of welders and welding operators, is required, and shall comply with the requirements of the ASME Boiler and Pressure Vessel Code (Section IX) except as modified herein.

Certain materials listed in Appendix A do not appear in ASME Section IX P-Number groups. Where these materials have been assigned P-Numbers in Appendix A, they may be welded under this Code for nonboiler external piping only without separate qualification as if they were listed in ASME Section IX.

127.5.2 Welding Responsibility. Each employer (see para. 100.2) shall be responsible for the welding performed by his organization and the performance of welders or welding operators employed by that organization.

127.5.3 Qualification Responsibility

(A) Procedures. Each employer shall be responsible for qualifying any WPS that he intends to have used by personnel of his organization. However, to avoid duplication of effort, and subject to approval of the owner, a WPS qualified by a technically competent group or agency may be used:

(A.1) if the group or agency qualifying the WPS meets all of the procedure qualification requirements of this Code

(A.2) if the fabricator accepts the WPS thus qualified

(A.3) if the user of the WPS has qualified at least one welder using the WPS

(A.4) if the user of the WPS assumes specific responsibility for the procedure qualification work done for him by signing the records required by para. 127.6

All four of the above conditions shall be met before a WPS thus qualified may be used.

(B) Welders and Welding Operators. Each employer shall be responsible for qualifying all the welders and welding operators employed by him.

However, to avoid duplication of effort, he may accept a Welder/Welding Operator Performance Qualification (WPQ) made by a previous employer (subject to the approval of the owner or his agent) on piping using the same or an equivalent procedure wherein the essential variables are within the limits established in Section IX, ASME Boiler and Pressure Vessel Code. An employer accepting such qualification tests by a previous employer shall obtain a copy (from the previous employer) of the WPQ, showing the name of the employer by whom the welders or welding operators were qualified, the dates of such qualification, and evidence that the welder or welding operator has maintained qualification in accordance with QW-322 of Section IX, ASME Boiler and Pressure Vessel Code. The employer shall then prepare and sign the record required in para. 127.6 accepting responsibility for the ability of the welder or welding operator.

127.5.4 Standard Welding Procedure Specifications. Standard Welding Procedure Specifications published by the American Welding Society and listed in Appendix E of Section IX of the ASME Boiler and Pressure Vessel Code are permitted for Code construction within the limitations established by Article V of ASME Section IX.

127.6 Welding Records

The employer shall maintain a record (WPS and/or WPQ) signed by him, and available to the purchaser or his agent and the inspector, of the WPSs used and the welders and/or welding operators employed by him, showing the date and results of procedure and performance qualification.

The WPQ shall also show the identification symbol assigned to the welder or welding operator employed by him, and the employer shall use this symbol to identify the welding performed by the welder or welding operator. This may be accomplished by the application of the symbol on the weld joint in a manner specified by the employer. Alternatively, the employer shall maintain records which identify the weld(s) made by the welder or welding operator.

128 BRAZING AND SOLDERING

128.1 General

128.1.1 The brazing processes that are to be used under this part of the Code shall meet all the test requirements of Section IX of the ASME Boiler and Pressure Vessel Code.

128.1.2 Soldering. Solderers shall follow the procedure in ASTM B 828, Standard Practice for Making Capillary Joints by Soldering of Copper and Copper Alloy Tube and Fittings.

128.2 Materials

128.2.1 Filler Metal. The brazing alloy or solder shall melt and flow freely within the specified or desired temperature range and, in conjunction with a suitable

Copyright ASME International
Provided by IHS under license with ASME
No reproduction or networking permitted without license from IHS
Not for Resale

flux or controlled atmosphere, shall wet and adhere to the surfaces to be joined.

128.2.2 Flux. A flux that is fluid and chemically active at brazing or soldering temperature shall be used when necessary to eliminate oxidation of the filler metal and the surfaces to be joined, and to promote free flow of the brazing alloy or solder.

128.3 Preparation

128.3.1 Surface Preparation. The surfaces to be brazed or soldered shall be clean and free from grease, oxides, paint, scale, dirt, or other material that is detrimental to brazing. A suitable chemical or mechanical cleaning method shall be used if necessary to provide a clean wettable surface.

128.3.2 Joint Clearance. The clearance between surfaces to be joined by brazing or soldering shall be no larger than is necessary to allow complete capillary distribution of the brazing alloy or solder.

128.4 Procedure

128.4.1 General

(A) Qualification of the brazing procedures to be used and of the performance of the brazer and brazing operators is required and shall comply with the requirements of para. 128.5.

(B) No brazing shall be done if there is impingement of rain, snow, sleet, or high wind on the area to be brazed.

128.4.2 Heating. To minimize oxidation, the joint shall be brought to brazing or soldering temperature in as short a time as possible without localized underheating or overheating.

128.4.3 Flux Removal. Residual flux shall be removed if detrimental.

128.5 Brazing Qualification

128.5.1 General. The qualification of the brazing procedure and of the performance of brazers and brazing operators shall be in accordance with the requirements of Part QB, Section IX, ASME Boiler and Pressure Vessel Code, except as modified herein.

128.5.2 Brazing Responsibility. Each employer (see para. 100.2) shall be responsible for the brazing performed by his organization and the performance of brazers or brazing operators employed by that organization.

128.5.3 Qualification Responsibility

(A) Procedures. Each employer shall be responsible for qualifying any Brazing Procedure Specification (BPS) that he intends to have used by personnel of his organization. However, to avoid duplication of effort, and subject to approval of the owner, a BPS qualified by a technically competent group or agency may be used:

(A.1) if the group or agency qualifying the procedures meets all of the procedure qualification requirements of this Code

(A.2) if the fabricator accepts the procedure thus qualified

(A.3) if the user of the procedure has qualified at least one brazer using the BPS

(A.4) if the user of the procedure assumes specific responsibility for the procedure qualification work done by him by signing the records required by para. 128.6

All four of the above conditions shall be met before a procedure thus qualified may be used.

(B) Brazers and Brazing Operators. Each employer shall be responsible for qualifying all the brazers and brazing operators employed by him.

However, to avoid duplication of effort, he may accept a Brazer/Brazing Operator Performance Qualification (BPQ) made by a previous employer (subject to the approval of the owner or his agent) on piping using the same or an equivalent procedure wherein the essential variables are within the limits established in Section IX, ASME Boiler and Pressure Vessel Code. An employer accepting such qualification tests by a previous employer shall obtain a copy (from the previous employer) of the BPQ, showing the name of the employer by whom the brazers or brazing operators were qualified, the dates of such qualification, and the date the brazer last brazed pressure piping components under such qualification. The employer shall then prepare and sign the record required in para. 128.6 accepting responsibility for the ability of the brazer or brazing operator.

128.6 Brazing Records

The employer shall maintain a record signed by him and available to the purchaser or his agent and the inspector, showing the date and results of procedure and performance qualification.

The BPQ shall also show the identification symbol assigned to the brazer or brazing operator employed by him, and the employer shall use this symbol to identify the brazing performed by the brazer or brazing operator. This may be accomplished by the application of the symbol on the braze joint in a manner specified by the employer. Alternatively, the employer shall maintain records which identify the braze joints(s) made by the brazer or brazing operator.

129 BENDING AND FORMING

129.1 Bending

Pipe may be bent by any hot or cold method and to any radius which will result in a bend surface free of cracks, as determined by a method of inspection specified in the design, and substantially free of buckles.

Copyright ASME International
Provided by IHS under license with ASME
No reproduction or networking permitted without license from IHS Not for Resale

Table 129.3.2 Approximate Lower Critical Temperatures

Material	Approximate Lower Critical Temperature °F (°C) [Note (1)]
Carbon Steel (P-No. 1)	1,340 (725)
Carbon Molybdenum Steel (P-No. 3)	1,350 (730)
1Cr–½Mo (P-No 4, Gr. No. 1)	1,375 (745)
1¼Cr–½Mo (P-No. 4, Gr. No. 2)	1,430 (775)
2¼Cr–1Mo, 3Cr–1Mo (P-No. 5A)	1,480 (805)
5Cr–½Mo (P-No. 5B, Gr. No. 1)	1,505 (820)
9Cr–½Mo (P-No. 5B, Gr. No. 2)	1,490 (810)

NOTE:
(1) These values are intended for guidance only. The user may apply values obtained for the specific material in lieu of these values.

Such bends shall meet the design requirements of paras. 102.4.5 and 104.2.1. This shall not prohibit the use of bends designed as creased or corrugated.

129.2 Forming

Piping components may be formed (swedging, lapping, or upsetting of pipe ends, extrusion of necks, etc.) by any suitable hot or cold working method, provided such processes result in formed surfaces which are uniform and free of cracks or other defects, as determined by method of inspection specified in the design.

129.3 Heat Treatment of Bends and Formed Components

129.3.1 Hot bending or forming is performed at a temperature above T_{crit} − 100°F (56°C) where T_{crit} is the lower critical temperature of the material. Cold bending or forming is performed at a temperature below T_{crit} − 100°F (56°C). (See Table 129.3.2 for lower critical temperatures.)

129.3.2 A postbending or postforming heat treatment at the time and temperature cycles listed for postweld heat treatment in Table 132 is required on all carbon steel (P-No. 1) materials with a nominal wall thickness in excess of ¾ in. (19.0 mm) unless the bending or forming operations are performed and completed at temperatures of 1,650°F (900°C) or greater.

129.3.3 A postforming or postbending heat treatment as defined below is required for all ferritic alloy steel (excluding P-No. 1) materials with a nominal pipe size 4 in. and larger or with a nominal thickness of ½ in. (13.0 mm) or greater.

(A) If hot bending or forming is performed, the material shall receive a full anneal, normalize and temper, or tempering heat treatment as specified by the designer.

(B) If cold bending or forming is performed, a heat treatment is required at the time and temperature cycle listed for the material in Table 132.

129.3.4 Postbending or postforming heat treatment of other materials including austenitic stainless steel is neither required nor prohibited. If a postbending or postforming heat treatment is to be performed, the designer shall fully describe the procedure to be used.

130 REQUIREMENTS FOR FABRICATING AND ATTACHING PIPE SUPPORTS

130.1

Standard pipe hangers and supports shall be fabricated in accordance with the requirements of MSS SP-58. Welders, welding operators, and WPSs shall be qualified in accordance with the requirements of the ASME Boiler and Pressure Vessel Code, Section IX.

130.2

Special hangers, supports, anchors, and guides, not defined as standard types of hanger components in MSS SP-58, shall be welded in accordance with the requirements of para. 127. (Paragraph 132 is not applicable except as required by the weld procedure used.) and inspected in accordance with the requirement of para. 136.4.2.

130.3

Welds attaching hangers, supports, guides, and anchors to the piping system shall conform to the requirements of Chapters V and VI of this Code.

131 WELDING PREHEAT

131.1

The preheat requirements listed herein are mandatory minimum values.

The base metal temperature prior to welding shall be at or above the specified minimum temperature in all directions from the point of welding for a distance of 3 in. or 1.5 times the base metal thickness (as defined in para. 131.4.1), whichever is greater.

The base metal temperature for tack welds shall be at or above the specified minimum temperature for a distance not less than 1 in. in all directions from the point of welding.

131.2

When welding two different P-Number materials, the minimum preheat temperature required shall be the higher temperature for the material to be welded.

131.3

The preheat temperature shall be checked by use of temperature-indicating crayons, thermocouple pyrometers, or other suitable methods to assure that the required

Copyright ASME International
Provided by IHS under license with ASME
No reproduction or networking permitted without license from IHS Not for Resale

preheat temperature is obtained prior to and uniformly maintained during the welding operation.

131.4 Preheat Temperature

The minimum preheat for all materials shall be 50°F (10°C) unless stated otherwise in the following paragraphs.

131.4.1 Thickness referred to is the greater of the nominal thicknesses at the weld of the parts to be joined.

131.4.2 P-No. 1. 175°F (80°C) for material that has both a specified maximum carbon content in excess of 0.30% and a thickness at the joint in excess of 1 in. (25.0 mm). Preheat may be based on the actual carbon content as determined from a ladle or product analysis in accordance with the material specification in lieu of the maximum carbon content specified in the material specification.

131.4.3 P-No. 3. 175°F (80°C) for material or product form that has either a specified minimum tensile strength in excess of 60,000 psi (413.7 MPa) or a thickness at the joint in excess of ½ in. (13.0 mm).

131.4.4 P-No. 4. 250°F (120°C) for all materials.

131.4.5 P-Nos. 5A and 5B

(A) 400°F (200°C) for material which has either a specified minimum tensile strength in excess of 60,000 psi (413.7 MPa), or has both a specified minimum chromium content above 6.0% and a thickness at the joint in excess of ½ in. (13.0 mm);

(B) 300°F (150°C) for all other materials having this P-Number.

131.4.6 P-No. 6. 400°F (200°C) for all materials.

131.4.7 P-Nos. 9A and 9B

(A) 250°F (120°C) for P-No. 9A materials;

(B) 300°F (150°C) for P-No. 9B materials.

131.4.8 P-No. 10I. 300°F (150°C) with an interpass temperature of 450°F (230°C) maximum.

131.5

For inert gas tungsten arc root pass welding, a lower preheat temperature in accordance with the temperature established in the WPS may be used.

131.6 Interruption of Welding

131.6.1 After welding commences, the minimum preheat temperature shall be maintained until any required PWHT is performed on P-Nos. 3, 4, 5A, 5B, and 6, except when all of the following conditions are satisfied.

(A) A minimum of at least ⅜ in. thickness of weld is deposited or 25% of the welding groove is filled, whichever is less (the weldment shall be sufficiently supported to prevent overstressing the weld if the weldment is to be moved or otherwise loaded).

(B) For P-Nos. 3, 4, and 5A (with a chromium content of 3.0% maximum) materials, the weld is allowed to cool slowly to room temperature.

(C) For P-No. 5B (with a chromium content greater than 3.0%) and P-No. 6 materials, the weld is subjected to an adequate intermediate heat treatment with a controlled rate of cooling.

(D) After cooling and before welding is resumed, visual examination of the weld shall be performed to assure that no cracks have formed.

(E) Required preheat shall be applied before welding is resumed.

132 POSTWELD HEAT TREATMENT

132.1

Before applying the detailed requirements and exemptions in these paragraphs, satisfactory qualification of the WPS to be used shall be performed in accordance with the essential variables of the ASME Boiler and Pressure Vessel Code, Section IX including the conditions of postweld heat treatment or lack of postweld heat treatment and including other restrictions listed below. Except as otherwise provided in paras. 132.2 and 132.3, all welds in materials included in the P-Numbers listed in Table 132 shall be given a postweld heat treatment within the temperature range specified in Table 132. (The range specified in Table 132 may be modified by Table 132.1 for the lower limit and para. 132.2 for the upper limit.) The materials in Table 132 are listed in accordance with the material P-Number grouping of Appendix A. Welds of materials not included in Table 132 shall be heat treated in accordance with the WPS.

132.2

Heat treatment may be accomplished by a suitable heating method which will provide the desired heating and cooling rates, the required metal temperature, temperature uniformity, and temperature control.

(A) The upper limit of the PWHT temperature range in Table 132 is a recommended value which may be exceeded provided the actual temperature does not exceed the lower critical temperature of either material (see Table 129.3.2).

(B) When parts of two different P-Numbers are joined by welding, the postweld heat treatment shall be that specified for the material requiring the higher PWHT temperature. When a nonpressure part is welded to a pressure part and PWHT is required for either part, the maximum PWHT temperature shall not exceed the maximum temperature acceptable for the pressure retaining part.

(C) Caution is necessary to preclude metallurgical damage to some materials or welds not intended or qualified to withstand the PWHT temperatures required.

--`,,```,,,,````-`-`,,`,,`,`,,`---
Copyright ASME International
Provided by IHS under license with ASME
No reproduction or networking permitted without license from IHS
Not for Resale

(04)

Table 132 Postweld Heat Treatment

P-Number from Appendix A	Holding Temperature Range, °F (°C)	Holding Time Based on Nominal Thickness	
		Up to 2 in. (50 mm)	Over 2 in. (50 mm)
P-No. 1 Gr. Nos. 1, 2, 3	1,100 (600) to 1,200 (650)	1 hr/in. (25 mm) 15 min minimum	2 hr plus 15 min for each additional inch over 2 in. (50 mm)

GENERAL NOTES:

(a) PWHT of P-No. 1 materials is not mandatory, provided that all of the following conditions are met:
(1) the nominal thickness, as defined in para. 132.4.1, is $^{3}/_{4}$ in. (19.0 mm) or less;
(2) a minimum preheat of 200°F (95°C) is applied when the nominal material thickness of either of the base metals exceeds 1 in. (25.0 mm).

(b) When it is impractical to PWHT at the temperature range specified in Table 132, it is permissible to perform the PWHT of this material at lower temperatures for longer periods of time in accordance with Table 132.1.

P-Number from Appendix A	Holding Temperature Range, °F (°C)	Holding Time Based on Nominal Thickness	
		Up to 2 in. (50 mm)	Over 2 in. (50 mm)
P-No. 3 Gr. Nos. 1, 2	1,100 (600) to 1,200 (650)	1 hr/in. (25 mm) 15 min minimum	2 hr plus 15 min for each additional inch over 2 in. (50 mm)

GENERAL NOTES:

(a) PWHT of P-No. 3 materials is not mandatory, provided all of the following conditions are met:
(1) the nominal thickness, as defined in para. 132.4.1, is $^{5}/_{8}$ in. (16.0 mm) or less;
(2) a minimum preheat of 200°F (95°C) is applied when the nominal material thickness of either of the base metals exceeds $^{5}/_{8}$ in. (16.0 mm);
(3) the specified carbon content of the P-No. 3 base material is 0.25% or less.

(b) When it is impractical to PWHT at the temperature range specified in Table 132, it is permissible to perform the PWHT of this material at lower temperatures for longer periods of time in accordance with Table 132.1.

Copyright ASME International
Provided by IHS under license with ASME
No reproduction or networking permitted without license from IHS
Not for Resale

Table 132 Postweld Heat Treatment (Cont'd) (04)

P-Number from Appendix A	Holding Temperature Range, °F (°C)	Holding Time Based on Nominal Thickness	
		Up to 2 in. (50 mm)	Over 2 in. (50 mm)
P-No. 4 Gr. Nos. 1, 2	1,200 (650) to 1,300 (700)	1 hr/in. (25 mm) 15 min minimum	2 hr plus 15 min for each additional inch over 2 in. (50 mm)

GENERAL NOTE: PWHT is not mandatory for P-No. 4 material under the following conditions:

(a) welds in pipe or attachment welds to pipe complying with all of the following conditions:

(1) a nominal material thickness of $\frac{1}{2}$ in. (13.0 mm) or less

(2) a specified carbon content of the material to be welded of 0.15% or less

(3) application of 250°F (120°C) minimum preheat during welding

(b) for seal welding of threaded or other mechanical joints provided

(1) the seal weld has a throat thickness of $\frac{3}{8}$ in. (9.0 mm) or less

(2) a minimum preheat of 250°F (120°C) is maintained during welding

(c) attachment welds for nonload-carrying attachments provided in addition to (a)(2) and (a)(3) above:

(1) stud welds or fillet welds made by the SMAW or GTAW process shall be used.

(2) the hardened portion of the heat affected zone (HAZ) shall not encroach on the minimum wall thickness of the pipe, as determined by welding procedure qualification using the maximum welding heat input. The depth of the HAZ shall be taken as the point where the HAZ hardness does not exceed the average unaffected base metal hardness by more than 10%.

(3) if SMAW is used, the electrode shall be the low hydrogen type.

(4) the thickness of the test plate used in making the welding procedure qualification of Section IX shall not be less than that of the material to be welded.

(5) the attachment weld has a throat thickness of $\frac{3}{16}$ in. or less.

P-Number from Appendix A	Holding Temperature Range, °F (°C)	Holding Time Based on Nominal Thickness	
		Up to 2 in. (50 mm)	Over 2 in. (50 mm)
P-No. 5A Gr. No. 1	1,300 (700) to 1,400 (760)	1 hr/in. (25 mm) 15 min minimum	2 hr plus 15 min for each additional inch over 2 in. (50 mm)

GENERAL NOTE: PWHT is not mandatory for P-No. 5A material under the following conditions:

(a) welds in pipe or attachment welds to pipe complying with all of the following conditions:

(1) a nominal material thickness of $\frac{1}{2}$ in. (13.0 mm) or less

(2) a specified carbon content of the material to be welded of 0.15% or less

(3) a minimum preheat of 300°F (150°C) is maintained during welding

(b) attachment welds for non-load-carrying attachments provided in addition to (a)(2) and (a)(3) above:

(1) stud welds or fillet welds made by the SMAW or GTAW process shall be used.

(2) the hardened portion of the heat affected zone (HAZ) shall not encroach on the minimum wall thickness of the pipe, as determined by welding procedure qualification using the maximum welding heat input. The depth of the HAZ shall be taken as the point where the HAZ hardness does not exceed the average unaffected base metal hardness by more than 10%.

(3) if SMAW is used, the electrode shall be the low hydrogen type.

(4) the thickness of the test plate used in making the welding procedure qualification of Section IX shall not be less than that of the material to be welded.

(5) the attachment weld has a throat thickness of $\frac{3}{16}$ in. or less.

Copyright ASME International
Provided by IHS under license with ASME
No reproduction or networking permitted without license from IHS
Not for Resale

Table 132 Postweld Heat Treatment (Cont'd)

P-Number from Appendix A	Holding Temperature Range, °F (°C)	Holding Time Based on Nominal Thickness	
		Up to 2 in. (50 mm)	Over 2 in. (50 mm)
P-No. 5B Gr. Nos. 1, 2	1,300 (700) to 1,400 (760)	1 hr/in. (25 mm) 15 min minimum	2 hr plus 15 min for each additional inch over 2 in. (50 mm)

P-Number from Appendix A	Holding Temperature Range, °F (°C)	Holding Time Based on Nominal Thickness	
		Up to 2 in. (50 mm)	Over 2 in. (50 mm)
P-No. 6 Gr. Nos. 1, 2, 3	1400 (760) to 1475 (800)	1 hr/in. (25 mm) 15 min minimum	2 hr plus 15 min for each additional inch over 2 in. (50 mm)

GENERAL NOTE: PWHT is not mandatory for P-No. 6 Type 410 material provided all of the following conditions are met:

(a) the specified carbon content is not more than 0.08%
(b) the nominal material thickness is $\frac{3}{8}$ in. (10 mm) or less
(c) the weld is made with A-No. 8, A-No. 9, or F-No. 43 filler metal

P-Number from Appendix A	Holding Temperature Range, °F (°C)	Holding Time Based on Nominal Thickness	
		Up to 2 in. (50 mm)	Over 2 in. (50 mm)
P-No. 7 Gr. Nos. 1, 2	1,350 (730) to 1,425 (775)	1 hr/in. (25 mm) 15 min minimum	2 hr plus 15 min for each additional inch over 2 in. (50 mm)

GENERAL NOTES:

(a) In lieu of the cooling rate described in para. 132.5, P-No. 7 material cooling rate shall be not greater than 100°F (55°C) per hr in the range above 1200°F (650°C) after which the cooling rate shall be sufficiently rapid to prevent embrittlement.

(b) PWHT is not mandatory for P-No. 7 Type 405 material provided all of the following conditions are met:

(1) the specified carbon content is not more than 0.08%
(2) the nominal material thickness is $\frac{3}{8}$ in. (10 mm) or less
(3) the weld is made with A-No. 8, A-No. 9, or F-No. 43 filler metal

P-Number from Appendix A	Holding Temperature Range, °F (°C)	Holding Time Based on Nominal Thickness	
		Up to 2 in. (50 mm)	Over 2 in. (50 mm)
P-No. 8 Gr. Nos. 1, 2, 3, 4	None	None	None

GENERAL NOTE: PWHT is neither required nor prohibited for joints between P-No. 8 austenitic stainless steels.

Copyright ASME International
Provided by IHS under license with ASME
No reproduction or networking permitted without license from IHS
Not for Resale

Table 132 Postweld Heat Treatment (Cont'd)

P-Number from Appendix A	Holding Temperature Range, °F (°C)	Holding Time Based on Nominal Thickness	
		Up to 2 in. (50 mm)	Over 2 in. (50 mm)
P-No. 9A Gr. No. 1	1,100 (600) to 1,200 (650)	1 hr/in. (25 mm) 15 min minimum	2 hr plus 15 min for each additional inch over 2 in. (50 mm)

GENERAL NOTES:

(a) PWHT is not mandatory for P-No. 9A material when welds on pipe or attachment welds to pipe comply with all of the following conditions:
- *(1)* a nominal material thickness of $\frac{1}{2}$ in. (13.0 mm) or less
- *(2)* a specified carbon content of the material to be welded of 0.15% or less
- *(3)* a minimum preheat of 250°F (120°C) is maintained during welding

(b) When it is impractical to PWHT at the temperature range specified in Table 132, it is permissible to perform the PWHT of this material at lower temperatures for longer periods of time in accordance with Table 132.1 but the minimum PWHT shall not be less than 1000°F (550°C).

P-Number from Appendix A	Holding Temperature Range, °F (°C)	Holding Time Based on Nominal Thickness	
		Up to 2 in. (50 mm)	Over 2 in. (50 mm)
P-No. 9B Gr. No. 1	1,100 (600) to 1,175 (630)	1 hr/in. (25 mm) 15 min minimum	2 hr plus 15 min for each additional inch over 2 in. (50 mm)

GENERAL NOTES:

(a) PWHT of P-No. 9B material is not mandatory for a nominal material thickness of $\frac{5}{8}$ in. (16.0 mm) or less provided the Welding Procedure Qualification has been made using material of thickness equal to or greater than the production weld.

(b) When it is impractical to PWHT at the temperature range specified in Table 132, it is permissible to perform the PWHT of this material at lower temperatures for longer periods of time in accordance with Table 132.1, but the minimum PWHT temperature shall not be less than 1000°F (550°C).

P-Number from Appendix A	Holding Temperature Range, °F (°C)	Holding Time Based on Nominal Thickness	
		Up to 2 in. (50 mm)	Over 2 in. (50 mm)
P-No. 10H Gr. No. 1	. . .	. . .	. . .

GENERAL NOTE: Postweld heat treatment is neither required nor prohibited. If any heat treatment is performed after forming or welding, it shall be performed within the temperature range listed below for the particular alloy, followed by a rapid cool:

Alloy S31803	1870°F–2010°F
Alloy S32550	1900°F–2050°F
Alloy S32750	1880°F–2060°F
All others	1800°F–1900°F

Copyright ASME International
Provided by IHS under license with ASME
No reproduction or networking permitted without license from IHS
Not for Resale

Table 132 Postweld Heat Treatment (Cont'd)

P-Number from Appendix A	Holding Temperature Range, °F (°C)	Holding Time Based on Nominal Thickness	
		Up to 2 in. (50 mm)	Over 2 in. (50 mm)
P-No. 10I Gr. No. 1	1,350 (730) to 1,500 (815)	1 hr/in. (25 mm) 15 min minimum	1 hr/in. (25 mm)

GENERAL NOTES:

(a) In lieu of the cooling rate described in para. 132.5, the P-No. 10 I material cooling rate shall be not greater than 100°F/hr in the range above 1,200°F (650°C), after which the cooling rate shall be sufficiently rapid to prevent embrittlement.

(b) Postweld heat treatment is neither required nor prohibited for a nominal thickness of $\frac{1}{2}$ in. or less.

Table 132.1 Alternate Postweld Heat Treatment Requirements for Carbon and Low Alloy Steels

Decrease in Temperatures Below Minimum Specified Temperature, °F (°C)	Minimum Holding Time at Decreased Temperature, hr [Note (2)]
50 (28)	2
100 (56)	4
150 (84) [Note (1)]	10
200 (112) [Note (1)]	20

GENERAL NOTE: Postweld heat treatment at lower temperatures for longer periods of time, in accordance with this Table, shall be used only where permitted in Table 132.

NOTES:

(1) A decrease of more than 100°F (56°C) below the minimum specified temperature is allowable only for P-No. 1, Gr. Nos. 1 and 2 materials.

(2) Times shown apply to thicknesses up to 1 in. (25 mm). Add 15 min/in. (15 min/25 mm) of thicknesses for thicknesses greater than 1 in. (25 mm).

132.3 Exemptions to Mandatory PWHT Requirements

132.3.1 Postweld heat treatment is not required for the following conditions:

(A) welds in nonferrous materials

(B) welds exempted in Table 132

(C) welds subject to temperatures above the lower critical temperature (see Table 129.3.2) during fabrication provided the WPS has been qualified with PWHT (see para. 132.1) at the temperature range to be reached during fabrication

132.3.2 The postweld heat treatment exemption of Table 132 may be based on the actual chemical composition as determined by a ladle or product analysis in accordance with the material specification in lieu of the specified or maximum specified chemical composition limits.

132.4 Definition of Thickness Governing PWHT

132.4.1 The term *nominal thickness* as used in Table 132 and Notes is the lesser thickness of (A) or (B) as follows:

(A) the thickness of the weld

(B) the thicker of the materials being joined at the weld

132.4.2 Thickness of the weld, which is a factor in determining the nominal thickness, is defined as follows:

(A) groove welds (girth and longitudinal)—the thicker of the two abutting ends after weld preparation, including I.D. machining

(B) fillet welds—the throat thickness of the weld

(C) partial penetration welds—the depth of the weld groove

(D) material repair welds—the depth of the cavity to be repaired

(E) branch welds—the weld thickness is the dimension existing in the plane intersecting the longitudinal axes and is calculated as indicated for each detail using

t_c = the smaller of $\frac{1}{4}$ in. or $0.7t_{nb}$

(1) for welds described in Fig. 127.4.8(D):

Detail (a)

$$\text{weld thickness} = t_{nb} + t_c$$

Detail (b)

$$\text{weld thickness} = t_{nh} + t_c$$

Detail (c)

$$\text{weld thickness} = \text{greater of } t_{nr} + t_c \text{ or } t_{nb} + t_c$$

Detail (d)

$$\text{weld thickness} = t_{nh} + t_{nr} + t_c$$

Detail (e)

Copyright ASME International
Provided by IHS under license with ASME
No reproduction or networking permitted without license from IHS Not for Resale

$$\text{weld thickness} = t_{nb} + t_c$$

(2) for welds described in Figs. 127.4.8(E) and (F):

$$\text{weld thickness} = \text{depth of groove weld} + \text{throat thickness of cover fillet}$$

132.4.3 The term *nominal material thickness* as used in Table 132 is the thicker of the materials being joined at the weld.

132.5 PWHT Heating and Cooling Requirements

Above 600°F (315°C), the rate of heating and cooling shall not exceed 600°F (335°C) per hr divided by ½ the maximum thickness of material in inches at the weld but in no case shall the rate exceed 600°F (335°C) per hr. (See Table 132 for cooling rate requirements for P-Nos. 7 and 10I materials.)

132.6 Furnace Heating

(A) Heating an assembly in a furnace should be used when practical; however, the size or shape of the unit or the adverse effect of a desired heat treatment on one or more components where dissimilar materials are involved, may dictate alternative procedures such as heating a section before assembly, or by applying local heating in accordance with para. 132.7.

(B) An assembly may be postweld heat treated in more than one heat in a furnace provided there is at least a 1 ft (300 mm) overlap of the heated sections and the portion of the assembly outside the furnace is shielded so that the temperature gradient is not harmful.

(C) Direct impingement of flame on the assembly is prohibited.

132.7 Local Heating

Welds may be locally PWHT by heating a circumferential band around the entire component with the weld located in the center of the band. The width of the band heated to the PWHT temperature for girth welds shall be at least three times the wall thickness at the weld of the thickest part being joined. For nozzle and attachment welds, the width of the band heated to the PWHT temperature shall extend beyond the nozzle weld or attachment weld on each side at least two times the header thickness and shall extend completely around the header.

133 STAMPING

Stamping, if used, shall be performed by a method that will not result in sharp discontinuities. In no case shall stamping infringe on the minimum wall thickness or result in dimpling or denting of the material being stamped.

CAUTIONARY NOTE: Detrimental effects can result from stamping of material which will be in operation under long term creep or creep fatigue conditions.

135 ASSEMBLY

135.1 General

The assembly of the various piping components, whether done in a shop or as field erection, shall be done so that the completely erected piping conforms with the requirements of the engineering design.

135.2 Alignment

135.2.1 Equipment Connections. When making connections to equipment, such as pumps or turbines or other piping components which are sensitive to externally induced loading, forcing the piping into alignment is prohibited if this action introduces end reactions which exceed those permitted by design.

135.2.2 Cold Springs. Before assembling joints in piping to be cold sprung, an examination shall be made of guides, supports, and anchors for obstructions which might interfere with the desired movement or result in undesired movement. The gap or overlap of piping prior to assembly shall be checked against the design specifications and corrected if necessary.

135.3 Bolted Flanged Connections

135.3.1 Fit Up. All flanged joints shall be fitted up so that the gasket contact surfaces bear uniformly on the gasket and then shall be made up with relatively uniform bolt stress.

135.3.2 Gasket Compression. When bolting gasketed flange joints, the gasket shall be properly compressed in accordance with the design principles applicable to the type of gasket being used.

135.3.3 Cast Iron to Steel Joints. Cast iron to steel flanged joints in accordance with para 108.3 shall be assembled with care to prevent damage to the cast iron flange.

135.3.4 Bolt Engagement. All bolts shall be engaged so that there is visible evidence of complete threading through the nut or threaded attachment.

135.3.5 Nonmetallic Lined Joints. When assembling nonmetallic lined joints, such as plastic lined steel pipe, consideration should be given to maintaining electrical continuity between flanged pipe sections where required.

135.4 Packed Joints and Caulked Joints

Care shall be used to assure adequate engagement of joint members. Where packed joints are used to absorb thermal expansion, proper clearance shall be provided at the bottom of the sockets to permit movement.

135.5 Threaded Piping

135.5.1 Thread Compound. Any compound or lubricant used in threaded joints shall be suitable for the

Copyright ASME International
Provided by IHS under license with ASME
No reproduction or networking permitted without license from IHS Not for Resale

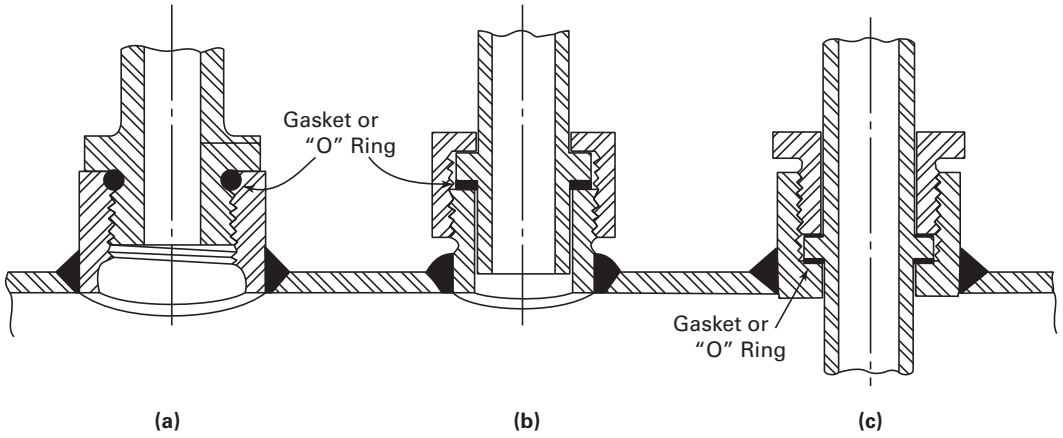

GENERAL NOTE: Threads are ASME B1.1 straight threads.

Fig. 135.5.3 Typical Threaded Joints Using Straight Threads

service conditions, and shall be compatible with the piping material and the service fluid.

135.5.2 Joints for Seal Welding. Threaded joints which are intended to be seal welded in accordance with para. 127.4.5 *should* be made up without any thread compound.

135.5.3 Joints Using Straight Threads. Some joints using straight threads, with sealing at a surface other than threads, are shown in Fig. 135.5.3. Care shall be used to avoid distorting the seal when incorporating such joints into piping assemblies by welding or brazing.

135.5.4 Backing Off. Backing off threaded joints to allow for alignment is prohibited.

135.6 Tubing Joints

135.6.1 Flared. The sealing surface shall be free of injurious defects before installation.

135.6.2 Flareless and Compression. Flareless and compression joints shall be assembled in accordance with manufacturer's recommendations.

135.7 Ductile Iron Bell End Piping

Assembly of ductile iron pipe, using ANSI/AWWA C111/A21.11 mechanical or push-on joints, shall comply with AWWA C600.

Copyright ASME International
Provided by IHS under license with ASME
No reproduction or networking permitted without license from IHS
Not for Resale

Chapter VI
Inspection, Examination, and Testing

136 INSPECTION AND EXAMINATION

136.1 Inspection

136.1.1 General. This Code distinguishes between "examination" and "inspection." Inspection is the responsibility of the Owner and may be performed by employees of the Owner or a party authorized by the Owner, except for the inspections required by para. 136.2. Prior to initial operation, a piping installation shall be inspected to assure compliance with the engineering design and with the material, fabrication, assembly, examination, and test requirements of this Code.

136.1.2 Verification of Compliance. Compliance with the requirements of this Code shall be verified by an Authorized Inspector when a Code stamp is required by Section I of the ASME Boiler and Pressure Vessel Code. The rules of this Code and the quality control system requirements of Appendix A-300 of Section I of the ASME Boiler and Pressure Vessel Code shall apply. The quality control system requirements are shown in Appendix J of this Code. The duty of the Inspector shall be as defined in PG-90, Section I, of the ASME Boiler and Pressure Vessel Code. Data Report Forms are included in the Appendix of ASME Section I for use in developing the necessary inspection records. The Inspector shall assure himself/herself that the piping has been constructed in accordance with the applicable requirements of this Code.

136.1.3 Rights of Inspectors. Inspectors shall have access to any place where work concerned with the piping is being performed. This includes manufacture, fabrication, heat treatment, assembly, erection, examination, and testing of the piping. They shall have the right to audit any examination, to inspect the piping using any appropriate examination method required by the engineering design or this Code, and to review all certifications and records necessary to satisfy the Owner's responsibility as stated in para. 136.1.1.

136.1.4 Qualifications of the Owner's Inspector

(A) The Owner's Inspector shall be designated by the Owner and shall be an employee of the Owner, an employee of an engineering or scientific organization, or of a recognized insurance or inspection company acting as the Owner's agent. The Owner's Inspector shall not represent nor be an employee of the piping manufacturer, fabricator, or erector unless the Owner is also the manufacturer, fabricator, or erector.

(B) The Owner's Inspector shall have not less than 10 years experience in the design, manufacture, erection, fabrication, or inspection of power piping. Each year of satisfactorily completed work toward an engineering degree recognized by the Accreditation Board for Engineering and Technology shall be considered equivalent to 1 year of experience, up to 5 years total.

(C) In delegating the performance of inspections, the Owner is responsible for determining that a person to whom an inspection function is delegated is qualified to perform that function.

136.2 Inspection and Qualification of Authorized Inspector for Boiler External Piping

136.2.1 Piping for which inspection and stamping is required as determined in accordance with para. 100.1.2(A) shall be inspected during construction and after completion and at the option of the Authorized Inspector at such stages of the work as he/she may designate. For specific requirements see the applicable parts of Section I of the ASME Boiler and Pressure Vessel Code, PG-104 through PG-113. Each manufacturer, fabricator, or assembler is required to arrange for the services of Authorized Inspectors.

136.2.1.1 The inspections required by this Section shall be performed by an Inspector employed by an ASME accredited Authorized Inspection Agency.

136.2.2 Certification by stamping and Data Reports, where required, shall be as per PG-104, PG-105, PG-109, PG-110, PG-111, and PG-112 of Section I of the ASME Boiler and Pressure Vessel Code.

136.3 Examination

136.3.1 General. Examination denotes the functions performed by the manufacturer, fabricator, erector, or a party authorized by the Owner which include nondestructive examinations (NDE), such as visual, radiography, ultrasonic, eddy current, liquid penetrant, and magnetic particle methods. The degree of examination and the acceptance standards beyond the requirements of this Code shall be a matter of prior agreement between the manufacturer, fabricator, or erector and the Owner.

136.3.2 Qualification of NDE Personnel. Personnel who perform nondestructive examination of welds shall be qualified and certified for each examination method in accordance with a program established by the

Copyright ASME International
Provided by IHS under license with ASME
No reproduction or networking permitted without license from IHS
Not for Resale

employer of the personnel being certified, which shall be based on the following minimum requirements:

(A) instruction in the fundamentals of the nondestructive examination method.

(B) on-the-job training to familiarize the NDE personnel with the appearance and interpretation of indications of weld defects. The length of time for such training shall be sufficient to assure adequate assimilation of the knowledge required.

(C) an eye examination performed at least once each year to determine optical capability of NDE personnel to perform the required examinations.

(D) upon completion of (A) and (B) above, the NDE personnel shall be given an oral or written examination and performance examination by the employer to determine if the NDE personnel are qualified to perform the required examinations and interpretation of results.

(E) certified NDE personnel whose work has not included performance of a specific examination method for a period of 1 year or more shall be recertified by successfully completing the examination of (D) above and also passing the visual examination of (C) above. Substantial changes in procedures or equipment shall require recertification of the NDE personnel.

The following may be used as alternatives to the preceding program, as applicable: SNT-TC-1A or CP-189; and personnel qualified to AWS QC-1 may be used for the visual examination of welds.

136.4 Examination Methods of Welds

136.4.1 Nondestructive Examination. Nondestructive examinations shall be performed in accordance with the requirements of this Chapter. The types and extent of mandatory examinations for pressure welds and welds to pressure retaining components are specified in Table 136.4. For welds other than those covered by Table 136.4, only visual examination is required. Welds requiring nondestructive examination shall comply with the applicable acceptance standards for indications as specified in paras. 136.4.2 through 136.4.6. As a guide, the detection capabilities for the examination method are shown in Table 136.4.1. Welds not requiring examination (i.e., RT, UT, MT, or PT) by this Code or the engineering design shall be judged acceptable if they meet the examination requirements of para. 136.4.2 and the pressure test requirements specified in para. 137.

136.4.2 Visual Examination. Visual examination as defined in para. 100.2. shall be performed, as necessary, during the fabrication and erection of piping components to provide verification that the design and WPS requirements are being met. In addition, visual examination shall be performed to verify that all completed welds in pipe and piping components comply with the acceptance standards specified in (A) below or with the limitations on imperfections specified in the material specification under which the pipe or component was furnished.

(A) Acceptance Standards. The following indications are unacceptable:

(A.1) cracks — external surface.

(A.2) undercut on surface which is greater than $^1/_{32}$ in. (1.0 mm) deep.

(A.3) weld reinforcement greater than specified in Table 127.4.2.

(A.4) lack of fusion on surface.

(A.5) incomplete penetration (applies only when inside surface is readily accessible).

(A.6) any other linear indications greater than $^3/_{16}$ in. (5.0 mm) long.

(A.7) surface porosity with rounded indications having dimensions greater than $^3/_{16}$ in. (5.0 mm) or four or more rounded indications separated by $^1/_{16}$ in. (2.0 mm) or less edge to edge in any direction. Rounded indications are indications which are circular or elliptical with their length less than three times their width.

136.4.3 Magnetic Particle Examination. Whenever required by this Chapter (see Table 136.4), magnetic particle examination shall be performed in accordance with the methods of Article 7, Section V, of the ASME Boiler and Pressure Vessel Code.

(A) Evaluation of Indications

(A.1) Mechanical discontinuities at the surface will be indicated by the retention of the examination medium. All indications are not necessarily defects; however, certain metallurgical discontinuities and magnetic permeability variations may produce similar indications which are not relevant to the detection of unacceptable discontinuities.

(A.2) Any indication which is believed to be nonrelevant shall be reexamined to verify whether or not actual defects are present. Surface conditioning may precede the reexamination. Nonrelevant indications which would mask indications of defects are unacceptable.

(A.3) Relevant indications are those which result from unacceptable mechanical discontinuities. Linear indications are those indications in which the length is more than three times the width. Rounded indications are indications which are circular or elliptical with the length less than three times the width.

(A.4) An indication of a discontinuity may be larger than the discontinuity that causes it; however, the size of the indication and not the size of the discontinuity is the basis of acceptance or rejection.

(B) Acceptance Standards. The following relevant indications are unacceptable:

(B.1) any cracks or linear indications.

(B.2) rounded indications with dimensions greater than $^3/_{16}$ in. (5.0 mm).

(B.3) four or more rounded indications in a line separated by $^1/_{16}$ in. (2.0 mm) or less edge to edge.

Copyright ASME International
Provided by IHS under license with ASME
No reproduction or networking permitted without license from IHS Not for Resale

Copyright ASME International
Provided by IHS under license with ASME
No reproduction or networking permitted without license from IHS

Not for Resale

Table 136.4 Mandatory Minimum NonDestructive Examinations for Pressure Welds or Welds to Pressure-Retaining Components

Type Weld	Piping Design Conditions and Nondestructive Examination		
	Temperatures Over 750°F (400°C) and at All Pressures	Temperatures Between 350°F (175°C) and 750°F (400°C) Inclusive With All Pressures Over 1025 psig [7100 kPa (gage)]	All Others
Butt welds (girth and longitudinal) [Note (1)]	RT or UT for over NPS 2. MT or PT for NPS 2 and less [Note (2)]	RT or UT for over NPS 2 with thickness over $^3/_4$ in. (19.0 mm). VT for all sizes with thickness $^3/_4$ in. (19.0 mm) or less.	Visual for all sizes and thicknesses
Welded branch connections (size indicated is branch size) [Notes (3) and (4)]	RT or UT for over NPS 4. MT or PT for NPS 4 and less [Note (2)]	RT or UT for branch over NPS 4 and thickness of branch over $^3/_4$ in. (19.0 mm) MT or PT for branch NPS 4 and less with thickness of branch over $^3/_4$ in. (19 mm) VT for all sizes with branch thickness $^3/_4$ in. (19.0 mm) or less	VT for all sizes and thicknesses
Fillet, socket, attachment, and seal welds	PT or MT for all sizes and thicknesses [Note (5)]	VT for all sizes and thicknesses	VT for all sizes and thicknesses

GENERAL NOTES:

(a) All welds shall be given a visual examination in addition to the type of specific nondestructive examination specified.

(b) NPS — nominal pipe size.

(c) RT — radiographic examination; UT — ultrasonic examination; MT — magnetic particle examination; PT — liquid penetrant examination; VT — visual examination.

(d) For nondestructive examinations of the pressure retaining component, refer to the standards listed in Table 126.1 or manufacturing specifications.

(e) Acceptance standards for nondestructive examinations performed are as follows: MT — see para. 136.4.3; PT — see para. 136.4.4; VT — see para. 136.4.2; RT — see para. 136.4.5; UT — see para. 136.4.6.

NOTES:

(1) The thickness of butt welds is defined as the thicker of the two abutting ends after end preparation.

(2) RT may be used as an alternative to PT or MT when it is performed in accordance with para. 136.4.5.

(3) RT or UT of branch welds shall be performed before any nonintegral reinforcing material is applied.

(4) In lieu of volumetric examination (RT, UT) of welded branch connections when required above, surface examination (PT, MT) is acceptable and, when used, shall be performed at the lesser of one-half of the weld thickness or each $^1/_2$ in. (12.5 mm) of weld thickness and all accessible final weld surfaces.

(5) Fillet welds not exceeding $^1/_4$ in. (6 mm) throat thickness which are used for the permanent attachment of nonpressure retaining parts are exempt from the PT or MT requirements of the above Table.

Table 136.4.1 Weld Imperfections Indicated by Various Types of Examination

Imperfection	Visual	Magnetic Particle	Liquid Penetrant	Radiography	Ultrasonic
Crack — surface	X [Note (1)]	X [Note (1)]	X [Note (1)]	X	X
Crack — internal	. . .	. . .	. . .	X	X
Undercut — surface	X [Note (1)]	X [Note (1)]	X [Note (1)]	X	. . .
Weld reinforcement	X [Note (1)]	. . .	. . .	X	. . .
Porosity	X [Notes (1), (2)]	X [Notes (1), (2)]	X [Notes (1), (2)]	X	. . .
Slag inclusion	X [Note (2)]	X [Note (2)]	X [Note (2)]	X	X
Lack of fusion (on surface)	X [Notes (1), (2)]	X [Notes (1), (2)]	X [Notes (1), (2)]	X	X
Incomplete penetration	X [Note (3)]	X [Note (3)]	X [Note (3)]	X	X

NOTES:
(1) Applies when the outside surface is accessible for examination and/or when the inside surface is readily accessible.
(2) Discontinuities are detectable when they are open to the surface.
(3) Applies *only* when the inside surface is readily accessible.

(B.4) ten or more rounded indications in any 6 sq in. (3 870 mm^2) of surface with the major dimension of this area not to exceed 6 in. (150 mm) with the area taken in the most unfavorable location relative to the indications being evaluated.

136.4.4 Liquid Penetrant Examination. Whenever required by this Chapter (see Table 136.4), liquid penetrant examination shall be performed in accordance with the methods of Article 6, Section V, of the ASME Boiler and Pressure Vessel Code.

(A) Evaluation of Indications

(A.1) Mechanical discontinuities at the surface will be indicated by bleeding out of the penetrant; however, localized surface imperfections, such as may occur from machining marks or surface conditions, may produce similar indications which are nonrelevant to the detection of unacceptable discontinuities.

(A.2) Any indication that is believed to be nonrelevant shall be regarded as a defect and shall be reexamined to verify whether or not actual defects are present. Surface conditioning may precede the reexamination. Nonrelevant indications and broad areas of pigmentation which would mask indications of defects are unacceptable.

(A.3) Relevant indications are those which result from mechanical discontinuities. Linear indications are those indications in which the length is more than three times the width. Rounded indications are indications which are circular or elliptical with the length less than three times the width.

(A.4) An indication of a discontinuity may be larger than the discontinuity that causes it; however, the size of the indication and not the size of the discontinuity is the basis of acceptance or rejection.

(B) Acceptance Standards. Indications whose major dimensions are greater than $\frac{1}{16}$ in. (2.0 mm) shall be considered relevant. The following relevant indications are unacceptable:

(B.1) any cracks or linear indications

(B.2) rounded indications with dimensions greater than $\frac{3}{16}$ in. (5.0 mm)

(B.3) four or more rounded indications in a line separated by $\frac{1}{16}$ in. (2.0 mm) or less edge to edge

(B.4) ten or more rounded indications in any 6 sq in. (3 870 mm^2) of surface with the major dimension of this area not to exceed 6 in. (150 mm) with the area taken in the most unfavorable location relative to the indications being evaluated

136.4.5 Radiography. When required by this Chapter (see Table 136.4), radiographic examination shall be performed in accordance with Article 2 of Section V of the ASME Boiler and Pressure Vessel Code, except that the requirements of T-285 are to be used as a guide but not for the rejection of radiographs unless the geometrical unsharpness exceeds 0.07 in. (2.0 mm).

(A) Acceptance Standards. Welds that are shown by radiography to have any of the following types of discontinuities are unacceptable:

(A.1) any type of crack or zone of incomplete fusion or penetration

(A.2) any other elongated indication which has a length greater than

(A.2.1) $\frac{1}{4}$ in. (6.0 mm) for t up to $\frac{3}{4}$ in. (19.0 mm), inclusive

(A.2.2) $\frac{1}{3}t$ for t from $\frac{3}{4}$ in. (19.0 mm) to $2\frac{1}{4}$ in. (57.0 mm), incl.

--`,,```,,,,````-`-`,,`,,`,`,,`---
Copyright ASME International
Provided by IHS under license with ASME
No reproduction or networking permitted without license from IHS
Not for Resale

(A.2.3) $\frac{3}{4}$ in. (19.0 mm) for t over $2\frac{1}{4}$ in. (57.0 mm) where t is the thickness of the thinner portion of the weld

NOTE: t referred to in (A.2.1), (A.2.2), and (A.2.3) above pertains to the thickness of the weld being examined; if a weld joins two members having different thickness at the weld, t is the thinner of these two thickness.

(A.3) any group of indications in line that have an aggregate length greater than t in a length of $12t$, except where the distance between the successive indications exceeds $6L$ where L is the longest indication in the group

(A.4) porosity in excess of that shown as acceptable in Appendix A-250 of Section I of the ASME Boiler and Pressure Vessel Code

(A.5) root concavity when there is an abrupt change in density, as indicated on the radiograph

136.4.6 Ultrasonic Examination. When required by this Chapter (see Table 136.4), ultrasonic examination (UT) shall be performed in accordance with Article 5 of Section V of the ASME Boiler and Pressure Vessel Code and the following additional requirements.

(A) The following criteria shall also be met when performing ultrasonic examinations.

(A.1) The nominal thickness of the material being examined shall be greater than $\frac{1}{2}$ in. (13 mm).

(A.2) The equipment used to perform the examination shall be capable of recording the UT data including the scanning positions. Where physical obstructions prevent the use of systems capable of recording the UT data including the scanning positions, manual UT may be used with the approval of the Owner.

(A.3) NDE personnel collecting and analyzing UT data shall have demonstrated their ability to perform an acceptable examination using written procedures. The procedures shall have been demonstrated to yield acceptable results when applied to a calibration block fabricated in accordance with ASME Section V, Article 5, T-542.2.

(B) Acceptance Standards. Welds that are shown by ultrasonic examination to have discontinuities which produce an indication greater than 20% of the reference level shall be investigated to the extent that ultrasonic examination personnel can determine their shape, identity, and location so that they may evaluate each discontinuity for acceptance in accordance with (B.1) and (B.2) below.

(B.1) Discontinuities evaluated as being cracks, lack of fusion, or incomplete penetration are unacceptable regardless of length.

(B.2) Other discontinuities are unacceptable if the indication exceeds the reference level and their length exceeds the following:

(B.2.1) $\frac{1}{4}$ in. (6.0 mm) for t up to $\frac{3}{4}$ in. (19.0 mm).

(B.2.2) $\frac{1}{3}t$ for t from $\frac{3}{4}$ in. (19.0 mm) to $2\frac{1}{4}$ in. (57.0 mm).

(B.2.3) $\frac{3}{4}$ in. (19.0 mm) for t over $2\frac{1}{4}$ in. (57.0 mm) where t is the thickness of the weld being examined. If the weld joins two members having different thicknesses at the weld, t is the thinner of these two thicknesses.

137 PRESSURE TESTS

137.1 General Requirements

137.1.1 Subassemblies. When conducted in accordance with the requirements of this Code, the pressure testing of piping systems to ensure leak tightness shall be acceptable for the determination of any leaks in piping subassemblies.

137.1.2 Temperature of Test Medium. The temperature of the test medium shall be that of the available source unless otherwise specified by the Owner. The test pressure shall not be applied until the system and the pressurizing medium are approximately at the same temperature. When conducting pressure tests at low metal temperatures, the possibility of brittle fracture shall be considered.

137.1.3 Personnel Protection. Suitable precautions in the event of piping system rupture shall be taken to eliminate hazards to personnel in the proximity of lines being tested.

137.1.4 Maximum Stress During Test. At no time during the pressure test shall any part of the piping system be subjected to a stress greater than that permitted by para. 102.3.3(B).

137.1.5 Testing Schedule. Pressure testing shall be performed following the completion of postweld heat treatment, required by para. 132, nondestructive examinations required by Table 136.4, and all other fabrication, assembly and erection activities required to provide the system or portions thereof subjected to the pressure test with pressure retaining capability.

137.2 Preparation for Testing

137.2.1 Exposure of Joints. All joints including welds not previously pressure tested shall be left uninsulated and exposed for examination during the test. By prior agreement the complete system or portions thereof subject to test may be insulated prior to the test period provided an extended holding time pressurization of the system is performed to check for possible leakage through the insulation barrier.

137.2.2 Addition of Temporary Supports. Piping systems designed for vapor or gas shall be provided with additional temporary supports if necessary to support the weight of the test liquid. Such supports shall meet the requirements for testing and system cleanup procedures described in para. 122.10.

137.2.3 Restraint or Isolation of Expansion Joints. Expansion joints shall be provided with temporary

Copyright ASME International
Provided by IHS under license with ASME
No reproduction or networking permitted without license from IHS Not for Resale

restraint if required for the additional pressure load under test, or they shall be isolated during the system test.

137.2.4 Isolation of Equipment and Piping Not Subjected to Pressure Test. Equipment that is not to be subjected to the pressure test shall be either disconnected from the system or isolated by a blank or similar means. Valves may be used for this purpose provided that valve closure is suitable for the proposed test pressure. Owner shall be aware of the limitations of pressure and temperature for each valve subject to test conditions and as further described in para. 107.1(C). Isolated equipment and piping must be vented.

137.2.5 Treatment of Flanged Joints Containing Blanks. Flanged joints at which blanks are inserted to blank off other equipment during the test need not be tested after removal of the blank provided the requirements of para. 137.7.1 are subsequently performed.

137.2.6 Precautions Against Test Medium Expansion. If a pressure test is to be maintained for a period of time during which the test medium in the system is subject to thermal expansion, precautions shall be taken to avoid excessive pressure. A pressure relief device set at $1\frac{1}{3}$ times the test pressure is recommended during the pressure test provided the requirements of paras. 137.1.4, 137.4.5, and 137.5.5 are not exceeded.

137.3 Requirements for Specific Piping Systems

137.3.1 Boiler External Piping. Boiler external piping [see para. 100.1.2(A)] shall be hydrostatically tested in accordance with PG-99 of Section I of the ASME Boiler and Pressure Vessel Code. The test shall be conducted in the presence of the Authorized Inspector.

137.3.2 Nonboiler External Piping. All nonboiler external piping shall be hydrostatically tested in accordance with para. 137.4. As an alternative, when specified by the owner, the piping may be leak tested in accordance with para. 137.5, 137.6, or 137.7. Lines open to the atmosphere, such as vents or drains downstream of the last shutoff valve, need not be tested.

137.4 Hydrostatic Testing

137.4.1 Material. When permitted by the Material Specification, a system hydrostatic test may be performed in lieu of the hydrostatic test required by the material specifications for material used in the piping subassembly or system provided the minimum test pressure required for the piping system is met.

137.4.2 Provision of Air Vents at High Points. Vents shall be provided at all high points of the piping system in the position in which the test is to be conducted to purge air pockets while the component or system is filling. Venting during the filling of the system may be provided by the loosening of flanges having a minimum of four bolts or by the use of equipment vents.

137.4.3 Test Medium. Water shall normally be used as the test medium unless otherwise specified by the Owner. Test water shall be clean and shall be of such quality as to minimize corrosion of the materials in the piping system. Further recommended precautions on the quality of test water used for hydrotesting of austenitic (300 series) and ferritic (400 series) stainless steels are contained in Appendix IV, para. IV-3.4.

137.4.4 Check of Test Equipment Before Applying Pressure. The test equipment shall be examined before pressure is applied to ensure that it is tightly connected. All low-pressure filling lines and all other items not subject to the test pressure shall be disconnected or isolated by valves or other suitable means.

137.4.5 Required Hydrostatic Test Pressure. The hydrostatic test pressure at any point in the piping system shall not be less than 1.5 times the design pressure, but shall not exceed the maximum allowable test pressure of any nonisolated components, such as vessels, pumps, or valves, nor shall it exceed the limits imposed by para. 102.3.3(B). The pressure shall be continuously maintained for a minimum time of 10 minutes and may then be reduced to the design pressure and held for such time as may be necessary to conduct the examinations for leakage. Examinations for leakage shall be made of all joints and connections. The piping system, exclusive of possible localized instances at pump or valve packing, shall show no visual evidence of weeping or leaking.

137.5 Pneumatic Testing

137.5.1 General. Except for preliminary testing in accordance with para. 137.5.4, pneumatic testing shall not be used unless the Owner specifies pneumatic testing or permits its use as an alternative. It is recommended that pneumatic testing be used only when one of the following conditions exists:

(A) when piping systems are so designed that they cannot be filled with water

(B) when piping systems are to be used in services where traces of the testing medium cannot be tolerated

137.5.2 Test Medium. The gas used as the test medium shall be nonflammable and nontoxic. Since compressed gas may be hazardous when used as a testing medium, it is recommended that special precautions for protection of personnel be observed when a gas under pressure is used as the test medium.

137.5.3 Check of Test Equipment Before Applying Pressure. The test equipment shall be examined before pressure is applied to ensure that it is tightly connected. All items not subjected to the test pressure shall be disconnected or isolated by valves or other suitable means.

Copyright ASME International
Provided by IHS under license with ASME
No reproduction or networking permitted without license from IHS
Not for Resale

137.5.4 Preliminary Test. A preliminary pneumatic test not to exceed 25 psig [175 kPa (gage)] may be applied, prior to other methods of leak testing, as a means of locating major leaks. If used, the preliminary pneumatic test shall be performed in accordance with the requirements of paras. 137.5.2 and 137.5.3.

137.5.5 Required Pneumatic Test Pressure. The pneumatic test pressure shall be not less than 1.2 nor more than 1.5 times the design pressure of the piping system. The test pressure shall not exceed the maximum allowable test pressure of any nonisolated component, such as vessels, pumps, or valves, in the system. The pressure in the system shall gradually be increased to not more than one-half of the test pressure, after which the pressure shall be increased in steps of approximately one-tenth of the test pressure until the required test pressure has been reached. The pressure shall be continuously maintained for a minimum time of 10 minutes. It shall then be reduced to the lesser of design pressure or 100 psig [700 kPa (gage)] and held for such time as may be necessary to conduct the examination for leakage. Examination for leakage detected by soap bubble or equivalent method shall be made of all joints and connections. The piping system, exclusive of possible localized instances at pump or valve packing, shall show no evidence of leaking.

137.6 Mass-Spectrometer and Halide Testing

137.6.1 When specified by the Owner, systems with conditions of operation and design that require testing methods having a greater degree of sensitivity than can be obtained by a hydrostatic or pneumatic test shall be tested by a method, such as helium mass-spectrometer test or halide test, which has the required sensitivity.

137.6.2 When a mass-spectrometer or halide test is performed, it shall be conducted in accordance with the instructions of the manufacturer of the test equipment. In all cases a calibrated reference leak, with a leak rate not greater than the maximum permissible leakage from the system, shall be used. The equipment shall be calibrated against the reference leak in such a way that the system leakage measured by the equipment can be determined to be not greater than the leak rate of the reference leak.

137.7 Initial Service Testing

137.7.1 When specified by the owner, an initial service test and examination is acceptable when other types of tests are not practical or when leak tightness is demonstrable due to the nature of the service. One example is piping where shut-off valves are not available for isolating a line and where temporary closures are impractical. Others may be systems where during the course of checking out of pumps, compressors, or other equipment, ample opportunity is afforded for examination for leakage prior to full scale operation. An initial service test is not applicable to boiler external piping.

137.7.2 When performing an initial service test, the piping system shall be gradually brought up to normal operating pressure and continuously held for a minimum time of 10 minutes. Examination for leakage shall be made of all joints and connections. The piping system exclusive of possible localized instances at pump or valve packing shall show no visual evidence of weeping or leaking.

137.8 Retesting After Repair or Additions

137.8.1 Repairs may be made to the pressure parts of boiler external piping after the hydrostatic test required by para. 137.3.1, provided the requirements of PW-54.2 of Section I of the ASME Boiler and Pressure Vessel Code are met.

137.8.2 Nonpressure parts may be welded to the pressure parts of boiler external piping after the hydrostatic test required by para. 137.3.1, provided the requirements of PW-54.3 of Section I of the ASME Boiler and Pressure Vessel Code are met.

137.8.3 In the event repairs or additions to nonboiler external piping are made following a test, the affected piping shall be retested in accordance with the provisions of para. 137.3.2. However, a system need not be retested after seal welding or after attachments of lugs, brackets, insulation supports, nameplates, or other nonpressure retaining attachments provided

(A) The attachment fillet weld does not exceed $\frac{3}{8}$ in. (10.0 mm) thickness or, if a full penetration weld is used, the material attached does not exceed the nominal thickness of the pressure retaining member or $\frac{1}{2}$ in. (12.0 mm), whichever is less.

(B) Welds shall be preheated as required by para. 131

(C) Welds shall be examined as required by Table 136.4.

(D) Seal welds shall be examined for leakage after system startup.

137.8.4 All weld defect repairs shall be made in accordance with para. 127.4.11.

Copyright ASME International
Provided by IHS under license with ASME
No reproduction or networking permitted without license from IHS Not for Resale

--`,,```,,,,````-`-`,,`,,`,`,,`---

Copyright ASME International
Provided by IHS under license with ASME
No reproduction or networking permitted without license from IHS

Not for Resale

MANDATORY APPENDICES

MANDATORY APPENDIX A

Begins on next page.

Copyright ASME International
Provided by IHS under license with ASME
No reproduction or networking permitted without license from IHS
Not for Resale

Table A-1 Carbon Steel

Spec. No.	Grade	Type or Class	Nominal Composition	P-No.	Notes	Specified Minimum Tensile, ksi	Specified Minimum Yield, ksi	*E* or *F*
Seamless Pipe and Tube								
A 53	A	S	C	1	(2)	48	30	1.00
	B	S	C–Mn	1	(2)	60	35	1.00
A 106	A	. . .	C–Si	1	(2)	48	30	1.00
	B	. . .	C–Si	1	(2)	60	35	1.00
	C	. . .	C–Si	1	(2)	70	40	1.00
A 179	. . .	. . .	C	1	(1)(2)(5)	(47)	26	1.00
A 192	. . .	. . .	C–Si	1	(2)(5)	(47)	26	1.00
A 210	A1	. . .	C–Si	1	(2)	60	37	1.00
	C	. . .	C–Mn–Si	1	(2)	70	40	1.00
A 333	1	. . .	C–Mn	1	(1)	55	30	1.00
	6	. . .	C–Mn–Si	1	(1)	60	35	1.00
A 369	FPA	. . .	C–Si	1	(2)	48	30	1.00
	FPB	. . .	C–Mn	1	(2)	60	35	1.00
API-5L	A	. . .	C	1	(1)(2)(14)	48	30	1.00
	B	. . .	C–Mn	1	(1)(2)(14)	60	35	1.00
Furnace Butt Welded Pipe								
A 53	. . .	F	C	1	(4)	48	30	0.60
API-5L	A25	I & II	C	1	(1)(4)(14)	45	25	0.60
Electric Resistance Welded Pipe and Tube								
A 53	A	E	C	1	(2)	48	30	0.85
	B	E	C–Mn	1	(2)	60	35	0.85
A 135	A	. . .	C	1	(1)(2)	48	30	0.85
	B	. . .	C–Mn	1	(1)(2)	60	35	0.85
A 178	A	. . .	C	1	(2)(5)	(47)	26	0.85
	C	. . .	C	1	(2)	60	37	0.85
A 214	. . .	. . .	C	1	(1)(2)(5)	(47)	26	0.85
A 226	. . .	. . .	C–Si	1	(2)(5)	(47)	26	0.85
A 333	1	. . .	C–Mn	1	(1)	55	30	0.85
	6	. . .	C–Mn–Si	1	. . .	60	35	0.85

Copyright ASME International
Provided by IHS under license with ASME
No reproduction or networking permitted without license from IHS
Not for Resale

Table A-1 Carbon Steel

Maximum Allowable Stress Values in Tension, ksi, for Metal Temperature, °F, Not Exceeding												
−20 to 100	200	300	400	500	600	650	−20 to 650	700	750	800	Grade	Spec. No.
											Seamless Pipe and Tube	
...	...	...	...	...	...	...	12.0	11.7	10.7	9.0	A	A 53
...	...	...	...	...	...	...	15.0	14.4	13.0	10.8	B	
...	...	...	...	...	...	...	12.0	11.7	10.7	9.0	A	A 106
...	...	...	...	...	...	...	15.0	14.4	13.0	10.8	B	
...	...	...	...	...	...	...	17.5	16.6	14.8	12.0	C	
...	...	...	...	...	...	...	11.8	11.5	10.6	9.2	...	A 179
...	...	...	...	...	...	...	11.8	11.5	10.7	9.0	...	A 192
...	...	...	...	...	...	...	15.0	14.4	13.0	10.8	A1	A 210
...	...	...	...	...	...	...	17.5	16.6	14.8	12.0	C	
...	...	...	...	...	...	...	13.8	...	...	...	1	A 333
...	...	...	...	...	...	...	15.0	14.4	...	...	6	
...	...	...	...	...	...	...	12.0	11.7	10.7	9.0	FPA	A 369
...	...	...	...	...	...	...	15.0	14.4	13.0	10.8	FPA	
...	...	...	...	...	...	...	12.0	11.7	10.7	9.0	A	API-5L
...	...	...	...	...	...	...	15.0	14.4	13.0	10.8	B	
											Furnace Butt Welded Pipe	
...	...	...	...	...	...	...	7.2	7.0	...	...	...	A 53
6.8	6.8	6.8	6.8	...	...	...	...	...	...	...	A 25	API-5L
											Electric Resistance Welded Pipe and Tube	
...	...	...	...	...	...	...	10.2	9.9	9.1	7.7	A	A 53
...	...	...	...	...	...	...	12.8	12.2	11.0	9.2	B	
...	...	...	...	...	...	...	10.2	9.9	9.1	7.9	A	A 135
...	...	...	...	...	...	...	12.8	12.2	11.0	9.2	B	
...	...	...	...	...	...	...	10.0	9.8	9.1	7.7	A	A 178
...	...	...	...	...	...	...	12.8	12.2	11.0	9.2	C	
...	...	...	...	...	...	...	10.0	9.8	9.1	7.8	...	A 214
...	...	...	...	...	...	...	10.0	9.8	9.1	7.8	...	A 226
...	...	...	...	...	...	...	11.7	...	...	...	1	A 333
...	...	...	...	...	...	...	12.8	12.2	...	...	6	

Copyright ASME International
Provided by IHS under license with ASME
No reproduction or networking permitted without license from IHS
Not for Resale

Table A-1 Carbon Steel (Cont'd)

Spec. No.	Grade	Type or Class	Nominal Composition	P-No.	Notes	Specified Minimum Tensile, ksi	Specified Minimum Yield, ksi	*E* or *F*
Electric Resistance Welded Pipe and Tube (Cont'd)								
API-5L	A25	I & II	C	1	(1)(14)	45	25	0.85
	A	. . .	C	1	(1)(2)(14)	48	30	0.85
	B	. . .	C–Mn	1	(1)(2)(14)	60	35	0.85
A 587	. . .	. . .	C	1	(1)(2)	48	30	0.85
Electric Fusion Welded Pipe — Filler Metal Added								
A 134	A283A	. . .	C	1	(1)(7)	45	24	0.80
	A283B	. . .	C	1	(1)(7)	50	27	0.80
	A283C	. . .	C	1	(1)(7)	55	30	0.80
	A283D	. . .	C	1	(1)(7)	60	33	0.80
A 134	A285A	. . .	C	1	(1)(2)(8)	45	24	0.80
	A285B	. . .	C	1	(1)(2)(8)	50	27	0.80
	A285C	. . .	C	1	(1)(2)(8)	55	30	0.80
A 139	A	. . .	C	1	(1)(2)(14)	48	30	0.80
	B	. . .	C–Mn	1	(1)(2)(14)	60	35	0.80
API-5L	A	. . .	C	1	(1)(2)(14)	48	30	0.90
	B	. . .	C–Mn	1	(1)(2)(14)	60	35	0.90
A 211	A570-30	. . .	C	1	(1)(7)(14)(16)	49	30	0.75
	A570-33	. . .	C	1	(1)(7)(14)(16)	52	33	0.75
	A570-40	. . .	C	1	(1)(7)(14)(16)	55	40	0.75
A 671	CA55	10,13	C	1	(1)(2)(15)	55	30	0.90
	CA55	11,12	C	1	(1)(2)(15)	55	30	1.00
	CA55	20,23,30,33	C	1	(1)(2)	55	30	0.90
	CA55	21,22,31,32	C	1	(1)(2)	55	30	1.00
A 671	CB60	10,13	C–Si	1	(1)(2)(15)	60	32	0.90
	CB60	11,12	C–Si	1	(1)(2)(15)	60	32	1.00
	CB60	20,23,30,33	C–Si	1	(1)(2)	60	32	0.90
	CB60	21,22,31,32	C–Si	1	(1)(2)	60	32	1.00
A 671	CB65	10,13	C–Si	1	(1)(2)(15)	65	35	0.90
	CB65	11,12	C–Si	1	(1)(2)(15)	65	35	1.00
	CB65	20,23,30,33	C–Si	1	(1)(2)	65	35	0.90
	CB65	21,22,31,32	C–Si	1	(1)(2)	65	35	1.00
A 671	CB70	10,13	C–Si	1	(1)(2)(15)	70	38	0.90
	CB70	11,12	C–Si	1	(1)(2)(15)	70	38	1.00
	CB70	20,23,30,33	C–Si	1	(1)(2)	70	38	0.90
	CB70	21,22,31,32	C–Si	1	(1)(2)	70	38	1.00
A 671	CC60	10,13	C–Mn–Si	1	(1)(2)(15)	60	32	0.90
	CC60	11,12	C–Mn–Si	1	(1)(2)(15)	60	32	1.00
	CC60	20,23,30,33	C–Mn–Si	1	(1)(2)	60	32	0.90
	CC60	21,22,31,32	C–Mn–Si	1	(1)(2)	60	32	1.00

Copyright ASME International
Provided by IHS under license with ASME
No reproduction or networking permitted without license from IHS Not for Resale

Table A-1 Carbon Steel (Cont'd)

Maximum Allowable Stress Values in Tension, ksi, for Metal Temperature, °F, Not Exceeding												
−20 to 100	200	300	400	500	600	650	−20 to 650	700	750	800	Grade	Spec. No.
											Electric Resistance Welded Pipe and Tube (Cont'd)	
9.5	9.5	9.5	9.5	...	...	...	...	...	...	...	A25	API-5L
...	...	...	...	...	...	...	10.2	9.9	9.1	7.7	A	
...	...	...	...	...	...	...	12.8	12.2	11.0	9.2	B	
...	...	...	...	...	...	...	10.2	9.9	9.1	7.9	...	A 587
											Electric Fusion Welded Pipe — Filler Metal Added	
...	...	...	...	...	...	...	9.0	...	...	...	A283A	A 134
...	...	...	...	...	...	...	10.0	...	...	...	A283B	
...	...	...	...	...	...	...	11.0	...	...	...	A283C	
...	...	...	...	...	...	...	12.0	...	...	...	A283D	
...	...	...	...	...	...	...	9.0	8.8	8.2	7.2	A285A	A 134
...	...	...	...	...	...	...	10.0	9.7	9.0	7.7	A285B	
...	...	...	...	...	...	...	11.0	10.6	9.7	8.2	A285C	
...	...	...	...	...	...	...	9.6	9.4	8.6	7.2	A	A 139
...	...	...	...	...	...	...	12.0	11.5	10.4	8.6	B	
...	...	...	...	...	...	...	10.8	10.5	9.6	8.1	A	API-5L
...	...	...	...	...	...	...	13.5	13.0	11.7	9.7	B	
9.2	9.2	...	...	...	...	...	...	...	...	...	A570-30	A 211
9.8	9.8	...	...	...	...	...	...	...	...	...	A570-33	
10.3	10.3	...	...	...	...	...	...	...	...	...	A570-40	
...	...	...	...	...	...	...	12.4	12.0	10.9	9.2	CA55	A 671
...	...	...	...	...	...	...	13.8	13.3	12.1	10.2	CA55	
...	...	...	...	...	...	...	12.4	12.0	10.9	9.2	CA55	
...	...	...	...	...	...	...	13.8	13.3	12.1	10.2	CA55	
...	...	...	...	...	...	...	13.5	13.0	11.7	9.7	CB60	A 671
...	...	...	...	...	...	...	15.0	14.4	13.0	10.8	CB60	
...	...	...	...	...	...	...	13.5	13.0	11.7	9.7	CB60	
...	...	...	...	...	...	...	15.0	14.4	13.0	10.8	CB60	
...	...	...	...	...	...	...	14.7	14.0	12.5	10.3	CB65	A 671
...	...	...	...	...	...	...	16.3	15.5	13.9	11.4	CB65	
...	...	...	...	...	...	...	14.7	14.0	12.5	10.3	CB65	
...	...	...	...	...	...	...	16.3	15.5	13.9	11.4	CB65	
...	...	...	...	...	...	...	15.8	14.9	13.3	10.8	CB70	A 671
...	...	...	...	...	...	...	17.5	16.6	14.8	12.0	CB70	
...	...	...	...	...	...	...	15.8	14.9	13.3	10.8	CB70	
...	...	...	...	...	...	...	17.5	16.6	14.8	12.0	CB70	
...	...	...	...	...	...	...	13.5	13.0	11.7	9.7	CC60	A 671
...	...	...	...	...	...	...	15.0	14.4	13.0	10.8	CC60	
...	...	...	...	...	...	...	13.5	13.0	11.7	9.7	CC60	
...	...	...	...	...	...	...	15.0	14.4	13.0	10.8	CC60	

Copyright ASME International
Provided by IHS under license with ASME
No reproduction or networking permitted without license from IHS
Not for Resale

Table A-1 Carbon Steel (Cont'd)

Spec. No.	Grade	Type or Class	Nominal Composition	P-No.	Notes	Specified Minimum Tensile, ksi	Specified Minimum Yield, ksi	*E* or *F*
Electric Fusion Welded Pipe — Filler Metal Added (Cont'd)								
A 671	CC65	10,13	C–Mn–Si	1	(1)(2)(15)	65	35	0.90
	CC65	11,12	C–Mn–Si	1	(1)(2)(15)	65	35	1.00
	CC65	20,23,30,33	C–Mn–Si	1	(1)(2)	65	35	0.90
	CC65	21,22,31,32	C–Mn–Si	1	(1)(2)	65	35	1.00
A 671	CC70	10,13	C–Mn–Si	1	(1)(2)(15)	70	38	0.90
	CC70	11,12	C–Mn–Si	1	(1)(2)(15)	70	38	1.00
	CC70	20,23,30,33	C–Mn–Si	1	(1)(2)	70	38	0.90
	CC70	21,22,31,32	C–Mn–Si	1	(1)(2)	70	38	1.00
A 671	CK75	10,13	C–Mn–Si	1	(1)(2)(15)	75	42	0.90
	CK75	11,12	C–Mn–Si	1	(1)(2)(15)	75	42	1.00
	CK75	20,23,30,33	C–Mn–Si	1	(1)(2)	75	40	0.90
	CK75	21,22,31,32	C–Mn–Si	1	(1)(2)	75	40	1.00
A 671	CD70	10,13	C–Mn–Si	1	(1)(2)(15)	70	50	0.90
	CD70	11,12	C–Mn–Si	1	(1)(2)(15)	70	50	1.00
	CD70	20,23,30,33	C–Mn–Si	1	(1)(3)	70	50	0.90
	CD70	21,22,31,32	C–Mn–Si	1	(1)(3)	70	50	1.00
A 671	CD80	10,13	C–Mn–Si	1	(1)(15)	80	60	0.90
	CD80	11,12	C–Mn–Si	1	(1)(15)	80	60	1.00
	CD80	20,23	C–Mn–Si	1	(1)(3)	80	60	0.90
	CD80	21,22	C–Mn–Si	1	(1)(3)	80	60	1.00
A 672	A45	10,13	C	1	(1)(2)(15)	45	24	0.90
	A45	11,12	C	1	(1)(2)(15)	45	24	1.00
	A45	20,23,30,33	C	1	(1)(2)	45	24	0.90
	A45	21,22,31,32	C	1	(1)(2)	45	24	1.00
A 672	A50	10,13	C	1	(1)(2)(15)	50	27	0.90
	A50	11,12	C	1	(1)(2)(15)	50	27	1.00
	A50	20,23,30,33	C	1	(1)(2)	50	27	0.90
	A50	21,22,31,32	C	1	(1)(2)	50	27	1.00
A 672	A55	10,13	C	1	(1)(2)(15)	55	30	0.90
	A55	11,12	C	1	(1)(2)(15)	55	30	1.00
	A55	20,23,30,33	C	1	(1)(2)	55	30	0.90
	A55	21,22,31,32	C	1	(1)(2)	55	30	1.00
A 672	B55	10,13	C	1	(1)(2)(15)	55	30	0.90
	B55	11,12	C	1	(1)(2)(15)	55	30	1.00
	B55	20,23,30,33	C	1	(1)(2)	55	30	0.90
	B55	21,22,31,32	C	1	(1)(2)	55	30	1.00
A 672	B60	10,13	C	1	(1)(2)(15)	60	32	0.90
	B60	11,12	C	1	(1)(2)(15)	60	32	1.00
	B60	20,23,30,33	C	1	(1)(2)	60	32	0.90
	B60	21,22,31,32	C	1	(1)(2)	60	32	1.00

--`,,```,,,,````-`-`,,`,,`,`,,`---

Copyright ASME International
Provided by IHS under license with ASME
No reproduction or networking permitted without license from IHS

Not for Resale

Table A-1 Carbon Steel (Cont'd)

Maximum Allowable Stress Values in Tension, ksi, for Metal Temperature, °F, Not Exceeding												
−20 to 100	200	300	400	500	600	650	−20 to 650	700	750	800	Grade	Spec. No.
											Electric Fusion Welded Pipe — Filler Metal Added (Cont'd)	
...	...	...	...	...	...	...	14.7	14.0	12.5	10.3	CC65	A 671
...	...	...	...	...	...	...	16.3	15.5	13.9	11.4	CC65	
...	...	...	...	...	...	...	14.7	14.0	12.5	10.3	CC65	
...	...	...	...	...	...	...	16.3	15.5	13.9	11.4	CC65	
...	...	...	...	...	...	...	15.8	14.9	13.3	10.8	CC70	A 671
...	...	...	...	...	...	...	17.5	16.6	14.8	12.0	CC70	
...	...	...	...	...	...	...	15.8	14.9	13.3	10.8	CC70	
...	...	...	...	...	...	...	17.5	16.6	14.8	12.0	CC70	
...	...	...	...	...	...	...	16.9	15.9	14.1	11.3	CK75	A 671
...	...	...	...	...	...	...	18.8	17.7	15.7	12.6	CK75	
...	...	...	...	...	...	...	16.9	15.9	14.1	11.3	CK75	
...	...	...	...	...	...	...	18.8	17.7	15.7	12.6	CK75	
15.8	15.8	15.8	15.7	15.7	15.7	15.5	...	...	...	...	CD70	A 671
17.5	17.5	17.5	17.4	17.4	17.4	17.2	...	...	...	...	CD70	
15.8	15.8	15.8	15.7	15.7	15.7	15.5	...	...	...	...	CD70	
17.5	17.5	17.5	17.4	17.4	17.4	17.2	...	...	...	...	CD70	
18.0	18.0	18.0	17.8	17.8	17.8	17.8	...	...	...	...	CD80	A 671
20.0	20.0	20.0	19.8	19.8	19.8	19.8	...	...	...	...	CD80	
18.0	18.0	18.0	17.8	17.8	17.8	17.8	...	...	...	...	CD80	
20.0	20.0	20.0	19.8	19.8	19.8	19.8	...	...	...	...	CD80	
...	...	...	...	...	...	...	10.2	9.9	9.3	8.1	A45	A 672
...	...	...	...	...	...	...	11.3	11.0	10.3	9.0	A45	
...	...	...	...	...	...	...	10.2	9.9	9.3	8.1	A45	
...	...	...	...	...	...	...	11.3	11.0	10.3	9.0	A45	
...	...	...	...	...	...	...	11.3	10.9	10.1	8.6	A50	A 672
...	...	...	...	...	...	...	12.5	12.1	11.2	9.6	A50	
...	...	...	...	...	...	...	11.3	10.9	10.1	8.6	A50	
...	...	...	...	...	...	...	12.5	12.1	11.2	9.6	A50	
...	...	...	...	...	...	...	12.4	12.0	10.9	9.2	A55	A 672
...	...	...	...	...	...	...	13.8	13.3	12.1	10.2	A55	
...	...	...	...	...	...	...	12.4	12.0	10.9	9.2	A55	
...	...	...	...	...	...	...	13.8	13.3	12.1	10.2	A55	
...	...	...	...	...	...	...	12.4	12.0	10.9	9.2	B55	A 672
...	...	...	...	...	...	...	13.8	13.3	12.1	10.2	B55	
...	...	...	...	...	...	...	12.4	12.0	10.9	9.2	B55	
...	...	...	...	...	...	...	13.8	13.3	12.1	10.2	B55	
...	...	...	...	...	...	...	13.5	13.0	11.7	9.7	B60	A 672
...	...	...	...	...	...	...	15.0	14.4	13.0	10.8	B60	
...	...	...	...	...	...	...	13.5	13.0	11.7	9.7	B60	
...	...	...	...	...	...	...	15.0	14.4	13.0	10.8	B60	

Copyright ASME International
Provided by IHS under license with ASME
No reproduction or networking permitted without license from IHS
Not for Resale

Table A-1 Carbon Steel (Cont'd)

Spec. No.	Grade	Type or Class	Nominal Composition	P-No.	Notes	Specified Minimum Tensile, ksi	Specified Minimum Yield, ksi	*E* or *F*
Electric Fusion Welded Pipe — Filler Metal Added (Cont'd)								
A 672	B65	10,13	C	1	(1)(2)(15)	65	35	0.90
	B65	11,12	C	1	(1)(2)(15)	65	35	1.00
	B65	20,23,30,33	C	1	(1)(2)	65	35	0.90
	B65	21,22,31,32	C	1	(1)(2)	65	35	1.00
A 672	B70	10,13	C	1	(1)(2)(15)	70	38	0.90
	B70	11,12	C	1	(1)(2)(15)	70	38	1.00
	B70	20,23,30,33	C	1	(1)(2)	70	38	0.90
	B70	21,22,31,32	C	1	(1)(2)	70	38	1.00
A 672	C55	10,13	C	1	(1)(2)(15)	55	30	0.90
	C55	11,12	C	1	(1)(2)(15)	55	30	1.00
	C55	20,23,30,33	C	1	(1)(2)	55	30	0.90
	C55	21,22,31,32	C	1	(1)(2)	55	30	1.00
A 672	C60	10,13	C	1	(1)(2)(15)	60	32	0.90
	C60	11,12	C	1	(1)(2)(15)	60	32	1.00
	C60	20,23,30,33	C	1	(1)(2)	60	32	0.90
	C60	21,22,31,32	C	1	(1)(2)	60	32	1.00
A 672	C65	10,13	C	1	(1)(2)(15)	65	35	0.90
	C65	11,12	C	1	(1)(2)(15)	65	35	1.00
	C65	20,23,30,33	C	1	(1)(2)	65	35	0.90
	C65	21,22,31,32	C	1	(1)(2)	65	35	1.00
A 672	C70	10,13	C	1	(1)(2)(15)	70	38	0.90
	C70	11,12	C	1	(1)(2)(15)	70	38	1.00
	C70	20,23,30,33	C	1	(1)(2)	70	38	0.90
	C70	21,22,31,32	C	1	(1)(2)	70	38	1.00
A 672	D70	10,13	C–Mn–Si	1	(1)(15)	70	50	0.90
	D70	11,12	C–Mn–Si	1	(1)(15)	70	50	1.00
	D70	20,23,30,33	C–Mn–Si	1	(1)(3)	70	50	0.90
	D70	21,22,31,32	C–Mn–Si	1	(1)(3)	70	50	1.00
A 672	D80	10,13	C–Mn–Si	1	(1)(15)	80	60	0.90
	D80	11,12	C–Mn–Si	1	(1)(15)	80	60	1.00
	D80	20,23	C–Mn–Si	1	(1)(3)	80	60	0.90
	D80	21,22	C–Mn–Si	1	(1)(3)	80	60	1.00
A 672	N75	10,13	C–Mn–Si	1	(1)(2)(15)	75	42	0.90
	N75	11,12	C–Mn–Si	1	(1)(2)(15)	75	42	1.00
	N75	20,23,30,33	C–Mn–Si	1	(1)(2)	75	40	0.90
	N75	21,22,31,32	C–Mn–Si	1	(1)(2)	75	40	1.00
A 691	CMSH70	10,13	C–Mn–Si	1	(1)(15)	70	50	0.90
	CMSH70	11,12	C–Mn–Si	1	(1)(15)	70	50	1.00
	CMSH70	20,23,30,33	C–Mn–Si	1	(1)(3)	70	50	0.90
	CMSH70	21,22,31,32	C–Mn–Si	1	(1)(3)	70	50	1.00

Copyright ASME International
Provided by IHS under license with ASME
No reproduction or networking permitted without license from IHS Not for Resale

Table A-1 Carbon Steel (Cont'd)

Maximum Allowable Stress Values in Tension, ksi, for Metal Temperature, °F, Not Exceeding												
−20 to 100	200	300	400	500	600	650	−20 to 650	700	750	800	Grade	Spec. No.
											Electric Fusion Welded Pipe — Filler Metal Added (Cont'd)	
...	...	...	...	...	...	...	14.7	14.0	12.5	10.3	B65	A 672
...	...	...	...	...	...	...	16.3	15.5	13.9	11.4	B65	
...	...	...	...	...	...	...	14.7	14.0	12.5	10.3	B65	
...	...	...	...	...	...	...	16.3	15.5	13.9	11.4	B65	
...	...	...	...	...	...	...	15.8	14.9	13.3	10.8	B70	A 672
...	...	...	...	...	...	...	17.5	16.6	14.8	12.0	B70	
...	...	...	...	...	...	...	15.8	14.9	13.3	10.8	B70	
...	...	...	...	...	...	...	17.5	16.6	14.8	12.0	B70	
...	...	...	...	...	...	...	12.4	12.0	10.9	9.2	C55	A 672
...	...	...	...	...	...	...	13.8	13.3	12.1	10.2	C55	
...	...	...	...	...	...	...	12.4	12.0	10.9	9.2	C55	
...	...	...	...	...	...	...	13.8	13.3	12.1	10.2	C55	
...	...	...	...	...	...	...	13.5	13.0	11.7	9.7	C60	A 672
...	...	...	...	...	...	...	15.0	14.4	13.0	10.8	C60	
...	...	...	...	...	...	...	13.5	13.0	11.7	9.7	C60	
...	...	...	...	...	...	...	15.0	14.4	13.0	10.8	C60	
...	...	...	...	...	...	...	14.7	14.0	12.5	10.3	C65	A 672
...	...	...	...	...	...	...	16.3	15.5	13.9	11.4	C65	
...	...	...	...	...	...	...	14.7	14.0	12.5	10.3	C65	
...	...	...	...	...	...	...	16.3	15.5	13.9	11.4	C65	
...	...	...	...	...	...	...	15.8	14.9	13.3	10.8	C70	A 672
...	...	...	...	...	...	...	17.5	16.6	14.8	12.0	C70	
...	...	...	...	...	...	...	15.8	14.9	13.3	10.8	C70	
...	...	...	...	...	...	...	17.5	16.6	14.8	12.0	C70	
15.8	15.8	15.8	15.7	15.7	15.7	15.5	...	...	...	...	D70	A 672
17.5	17.5	17.5	17.4	17.4	17.4	17.2	...	...	...	...	D70	
15.8	15.8	15.8	15.7	15.7	15.7	15.5	...	...	...	...	D70	
17.5	17.5	17.5	17.4	17.4	17.4	17.2	...	...	...	...	D70	
18.0	18.0	18.0	17.8	17.8	17.8	17.8	...	...	...	...	D80	A 672
20.0	20.0	20.0	19.8	19.8	19.8	19.8	...	...	...	...	D80	
18.0	18.0	18.0	17.8	17.8	17.8	17.8	...	...	...	...	D80	
20.0	20.0	20.0	19.8	19.8	19.8	19.8	...	...	...	...	D80	
...	...	...	...	...	...	...	16.9	15.9	14.1	11.3	N75	A 672
...	...	...	...	...	...	...	18.8	17.7	15.7	12.6	N75	
...	...	...	...	...	...	...	16.9	15.9	14.1	11.3	N75	
...	...	...	...	...	...	...	18.8	17.7	15.7	12.6	N75	
15.8	15.8	15.8	15.7	15.7	15.7	15.5	...	...	...	...	CMSH70	A 691
17.5	17.5	17.5	17.4	17.4	17.4	17.2	...	...	...	...	CMSH70	
15.8	15.8	15.8	15.7	15.7	15.7	15.5	...	...	...	...	CMSH70	
17.5	17.5	17.5	17.4	17.4	17.4	17.2	...	...	...	...	CMSH70	

Copyright ASME International
Provided by IHS under license with ASME
No reproduction or networking permitted without license from IHS
Not for Resale

Table A-1 Carbon Steel (Cont'd)

Spec. No.	Grade	Type or Class	Nominal Composition	P-No.	Notes	Specified Minimum Tensile, ksi	Specified Minimum Yield, ksi	*E* or *F*
Electric Fusion Welded Pipe — Filler Metal Added (Cont'd)								
A 691	CMSH80	10,13	C–Mn–Si	1	(1)(15)	80	60	0.90
	CMSH80	11,12	C–Mn–Si	1	(1)(15)	80	60	1.00
	CMSH80	20,23	C–Mn–Si	1	(1)(3)	80	60	0.90
	CMSH80	21,22	C–Mn–Si	1	(1)(3)	80	60	1.00
A 691	CMS75	10,13	C–Mn–Si	1	(1)(2)(15)	75	42	0.90
	CMS75	11,12	C–Mn–Si	1	(1)(2)(15)	75	42	1.00
	CMS75	20,23,30,33	C–Mn–Si	1	(1)(2)	75	40	0.90
	CMS75	21,22,31,32	C–Mn–Si	1	(1)(2)	75	40	1.00
Copper Brazed Tubing								
A 254	...	...	C	...	(1)(9)(10)	42	25	1.00
Plate								
A 36	...	...	C–Mn–Si	1	(1)(7)(21)	58	36	0.92
A 283	A	...	C	1	(1)(7)	45	24	0.92
	B	...	C	1	(1)(7)	50	27	0.92
	C	...	C	1	(1)(7)	55	30	0.92
	D	...	C	1	(1)(7)	60	33	0.92
A 285	A	...	C	1	(2)	45	24	1.00
	B	...	C	1	(2)	50	27	1.00
	C	...	C	1	(2)	55	30	1.00
A 299	...	...	C–Mn–Si	1	(2)(23)	75	40	1.00
	...	...	C–Mn–Si	1	(2)(22)	75	42	1.00
A 515	55	...	C–Si	1	(2)	55	30	1.00
	60	...	C–Si	1	(2)	60	32	1.00
	65	...	C–Si	1	(2)	65	35	1.00
	70	...	C–Si	1	(2)	70	38	1.00
A 516	55	...	C–Si	1	(2)	55	30	1.00
	60	...	C–Mn–Si	1	(2)	60	32	1.00
	65	...	C–Mn–Si	1	(2)	65	35	1.00
	70	...	C–Mn–Si	1	(2)	70	38	1.00
Forgings								
A 105	...	...	C–Si	1	(2)	70	36	1.00
A 181	...	60	C–Si	1	(2)	60	30	1.00
	...	70	C–Si	1	(2)	70	36	1.00

Copyright ASME International
Provided by IHS under license with ASME
No reproduction or networking permitted without license from IHS
Not for Resale

Table A-1 Carbon Steel (Cont'd)

Maximum Allowable Stress Values in Tension, ksi, for Metal Temperature, °F, Not Exceeding												
−20 to 100	200	300	400	500	600	650	−20 to 650	700	750	800	Grade	Spec. No.
											Electric Fusion Welded Pipe — Filler Metal Added (Cont'd)	
18.0	18.0	18.0	17.8	17.8	17.8	17.8	...	...	...	...	CMSH80	A 691
20.0	20.0	20.0	19.8	19.8	19.8	19.8	...	...	...	...	CMSH80	
18.0	18.0	18.0	17.8	17.8	17.8	17.8	...	...	...	...	CMSH80	
20.0	20.0	20.0	19.8	19.8	19.8	19.8	...	...	...	...	CMSH80	
...	...	...	...	...	...	...	16.9	15.9	14.1	11.3	CMS75	A 691
...	...	...	...	...	...	...	18.8	17.7	15.7	12.6	CMS75	
...	...	...	...	...	...	...	16.9	15.9	14.1	11.3	CMS75	
...	...	...	...	...	...	...	18.8	17.7	15.7	12.6	CMS75	
											Copper Brazed Tubing	
6.0	5.5	4.8	3.0	...	...	...	...	...	...	...	...	A 254
											Plate	
...	...	...	...	...	...	...	12.7	...	...	...	...	A 36
...	...	...	...	...	...	...	10.4	...	...	...	A	A 283
...	...	...	...	...	...	...	11.5	...	...	...	B	
...	...	...	...	...	...	...	12.7	...	...	...	C	
...	...	...	...	...	...	...	13.8	...	...	...	D	
...	...	...	...	...	...	...	11.3	11.0	10.3	9.0	A	A 285
...	...	...	...	...	...	...	12.5	12.1	11.2	9.6	B	
...	...	...	...	...	...	...	13.8	13.3	12.1	10.2	C	
...	...	...	...	...	...	...	18.8	17.7	15.7	12.6	...	A 299
...	...	...	...	...	...	...	18.8	17.7	15.7	12.6	...	
...	...	...	...	...	...	...	13.8	13.3	12.1	10.2	55	A 515
...	...	...	...	...	...	...	15.0	14.4	13.0	10.8	60	
...	...	...	...	...	...	...	16.3	15.5	13.9	11.4	65	
...	...	...	...	...	...	...	17.5	16.6	14.8	12.6	70	
...	...	...	...	...	...	...	13.8	13.3	12.1	10.2	55	A 516
...	...	...	...	...	...	...	15.0	14.4	13.0	10.8	60	
...	...	...	...	...	...	...	16.3	15.5	13.9	11.4	65	
...	...	...	...	...	...	...	17.5	16.6	14.8	12.0	70	
											Forgings	
...	...	...	...	...	...	...	17.5	16.6	14.8	12.0	...	A 105
...	...	...	...	...	...	...	15.0	14.4	13.0	10.8	...	A 181
...	...	...	...	...	...	...	17.5	16.6	14.8	12.0	...	

Copyright ASME International
Provided by IHS under license with ASME
No reproduction or networking permitted without license from IHS
Not for Resale

Table A-1 Carbon Steel (Cont'd)

Spec. No.	Grade	Type or Class	Nominal Composition	P-No.	Notes	Specified Minimum Tensile, ksi	Specified Minimum Yield, ksi	*E* or *F*
Wrought Fittings (Seamless and Welded)								
A 234	WPB	...	C–Si	1	(2)	60	35	1.00
	WPC	...	C–Si	1	(2)	70	40	1.00
Castings								
A 216	WCA	...	C–Si	1	(2)(6)	60	30	0.80
	WCB	...	C–Si	1	(2)(6)	70	36	0.80
	WCC	...	C–Mn–Si	1	(2)(6)	70	40	0.80
Bars and Shapes								
A 36	...	...	C–Mn–Si	1	(1)(2)	58	36	1.00
Bolts, Nuts, and Studs								
A 193	...	...	...	...	(11)	...	...	...
A 194	1,2,2H	...	...	...	(12)	...	...	...
A 307	B	...	C	...	(1)(13)(21)	60	...	...
A 449	...	...	C	...	(1)(17)(18)	120	...	...
	...	...	C	...	(1)(17)(19)	105	...	...
	...	...	C	...	(1)(17)(20)	90	...	...

GENERAL NOTES:

(a) The tabulated specifications are ANSI/ASTM or ASTM, except API-5L. For ASME Boiler and Pressure Vessel Code applications, see related specifications in Section II of the ASME Code.

(b) The stress values in this Table may be interpolated to determine values for intermediate temperatures.

(c) The P-Numbers indicated in this Table are identical to those adopted by ASME Boiler and Pressure Vessel Code. Qualification of welding procedures, welders and welding operators is required and shall comply with the ASME Boiler and Pressure Vessel Code (Section IX) except as modified by para. 127.5.

(d) Tensile strengths and allowable stresses shown in "ksi" are "thousands of pounds per square inch."

(e) The materials listed in this Table shall not be used at design temperatures above those for which allowable stress values are given except as permitted by para. 122.6.2(G).

(f) The tabulated stress values are $S \times E$ (weld joint efficiency factor) or $S \times F$ (material quality factor), as applicable. Weld joint efficiency factors are shown in Table 102.4.3.

(g) Pressure–temperature ratings of piping components, as published in standards referenced in this Code, may be used for components meeting the requirements of those standards. The allowable stress values given in this Table are for use in designing piping components which are not manufactured in accordance with referenced standards.

(h) All the materials listed are classifed as ferritic [see Table 104.1.2(A)].

NOTES:

(1) THIS MATERIAL IS NOT ACCEPTABLE FOR CONSTRUCTION OF PRESSURE RETAINING PARTS OF BOILER EXTERNAL PIPING — SEE FIGS. 100.1.2(A) AND (B).

(2) Upon prolonged exposure to temperatures above 775°F, the carbide phase of carbon steel may be converted to graphite.

(3) The allowable stress values given are for pipe fabricated from plate not exceeding $2^1/_2$ in. in thickness.

(4) This material shall not be used for flammable fluids. Refer to para. 105.2.1(A).

(5) Tensile value in parentheses is expected minimum.

(6) The 0.80 material quality factor for casting may be increased in accordance with para. 102.4.6.

(7) The stress values for structural quality plate include a material quality factor of 0.92. The allowable stresses for A 283 Grade D and A 36 plate have been limited to 12.7 ksi.

(8) These stress values are permitted only if killed or semikilled steels are used.

(9) A 254 is copper brazed (not welded) steel pipe.

Copyright ASME International
Provided by IHS under license with ASME
No reproduction or networking permitted without license from IHS
Not for Resale

Table A-1 Carbon Steel (Cont'd)

Maximum Allowable Stress Values in Tension, ksi, for Metal Temperature, °F, Not Exceeding												
−20 to 100	200	300	400	500	600	650	−20 to 650	700	750	800	Grade	Spec. No.
											Wrought Fittings (Seamless and Welded)	
...	...	...	...	...	...	...	15.0	14.4	13.0	10.8	WPB	A 234
...	...	...	...	...	...	...	17.5	16.6	14.8	12.0	WPC	
											Castings	
...	...	...	...	...	...	...	12.0	11.5	10.4	8.6	WCA	A 216
...	...	...	...	...	...	...	14.0	13.3	11.8	9.6	WCB	
...	...	...	...	...	...	...	14.0	13.3	11.8	9.6	WCC	
											Bars and Shapes	
...	...	...	...	...	...	...	14.5	13.9	12.6	10.5	...	A 36
											Bolts, Nuts, and Studs	
...	...	...	...	...	...	...	...	...	...	...	...	A 193
...	...	...	...	...	...	...	...	...	...	...	1,2,2H	A 194
7.0	7.0	7.0	7.0	...	...	...	...	...	...	...	B	A 307
23.0	23.0	23.0	23.0	23.0	23.0	23.0	...	...	...	...	...	A 449
23.0	20.3	20.3	20.3	20.3	20.3	20.3	...	...	...	...	...	
14.5	14.5	14.5	14.5	14.5	14.5	14.5	...	...	...	...	...	

NOTES TO TABLE A-1 (CONT'D)

(10) For saturated steam at 250 psi (406°F), the values given for 400°F may be used.

(11) For A 193 alloy and stainless steel bolts for use with carbon steel piping, see Tables A-2 and A-3.

(12) This is a product specification. Allowable stresses are not necessary. Limitations on metal temperature for materials covered by this specification for use under B31.1 are:

Grades 1 and 2	−20°F to 600°F
Grade 2H	−20°F to 800°F

(13) This material shall not be used above 400°F. The allowable stress value is 7000 psi.

(14) This material is not listed in the ASME Boiler and Pressure Vessel Code, Section IX. However, weld procedures shall be qualified in accordance with the P-Number shown. See para. 127.5.1.

(15) This material shall not be used in nominal wall thicknesses exceeding $^{3}/_{4}$ in.

(16) These allowable stress values are for pipe made using a butt-welded joint process. Pipe made by other processes shall not be used.

(17) These allowable stress values are established from a consideration of strength only and will be satisfactory for average service. For bolted joints, where freedom from leakage over a long period of time without retightening is required, lower stress values may be necessary as determined from the relative flexibility of the flange, bolts, and corresponding relaxation properties.

(18) These allowable stress values apply to bolting materials less than or equal to 1 in. diameter.

(19) These allowable stress values apply to bolting materials greater than 1 in. diameter and less than or equal to $1^{1}/_{2}$ in.

(20) These allowable stress values apply to bolting materials greater than $1^{1}/_{2}$ in. diameter and less than or equal to 3 in. diameter.

(21) The allowable stress values listed in MSS SP-58 for this material may be used for pipe supporting elements designed in accordance with MSS SP-58.

(22) These values apply to material less than or equal to 1 in. thick.

(23) These values apply to material greater than 1 in. thick.

Copyright ASME International
Provided by IHS under license with ASME
No reproduction or networking permitted without license from IHS
Not for Resale

Table A-2 Low and Intermediate Alloy Steel

Spec. No.	Grade	Type or Class	Nominal Composition	P-No.	Notes	Specified Minimum Tensile, ksi	Specified Minimum Yield, ksi	*E* or *F*
Seamless Pipe and Tube								
A 199	T5	...	5Cr–½ Mo	5B	(1)(5)	60	25	1.00
	T9	...	9Cr–1Mo	5B	(1)(5)	60	25	1.00
A 199	T11	...	1¼Cr–½ Mo	4	(1)	60	25	1.00
	T21	...	3Cr–1Mo	5A	(1)	60	25	1.00
	T22	...	2¼Cr–1Mo	5A	(1)(17)	60	25	1.00
A 213	T2	...	½Cr–½Mo	3	...	60	30	1.00
	T5	...	5Cr–½Mo	5B	(5)	60	30	1.00
	T5b	...	5Cr–½Mo–1½Si	5B	(5)	60	30	1.00
A 213	T5c	...	5Cr–½Mo–Ti	5B	(5)	60	30	1.00
	T9	...	9Cr–1Mo	5B	(5)	60	30	1.00
	T11	...	1¼Cr–½Mo	4	...	60	30	1.00
A 213	T12	...	1Cr–½Mo	4	...	60	30	1.00
	T21	...	3Cr–1Mo	5A	...	60	30	1.00
	T22	...	2¼Cr–1Mo	5A	(17)	60	30	1.00
	T91	...	9Cr–1Mo–V	5B	(5)(19)	85	60	1.00
	T91	...	9Cr–1Mo–V	5B	(5)(20)	85	60	1.00
A 333	3	...	3½Ni	9B	(1)	65	35	1.00
	4	...	¾Cr–¾Ni–Cu–Al	4	(1)	60	35	1.00
	7	...	2½Ni	9A	(1)	65	35	1.00
	9	...	2Ni–1Cu	9A	(1)(5)	63	46	1.00
A 335	P1	...	C–½Mo	3	(2)	55	30	1.00
	P2	...	½Cr–½Mo	3	...	55	30	1.00
	P5	...	5Cr–½Mo	5B	(5)	60	30	1.00
	P5b	...	5Cr–½Mo–1½Si	5B	(5)	60	30	1.00
A 335	P5c	...	5Cr–½Mo–Ti	5B	(5)	60	30	1.00
	P9	...	9Cr–1Mo	5B	(5)	60	30	1.00
	P11	...	1¼Cr–½Mo–Si	4	...	60	30	1.00
A 335	P12	...	1Cr–½Mo	4	...	60	32	1.00
	P21	...	3Cr–1Mo	5A	...	60	30	1.00
	P22	...	2¼Cr–1Mo	5A	(17)	60	30	1.00
	P91	...	9Cr–1Mo–V	5B	(5)(19)	85	60	1.00
	P91	...	9Cr–1Mo–V	5B	(5)(20)	85	60	1.00
A 369	FP1	...	C–½Mo	3	(2)	55	30	1.00
	FP2	...	½Cr–½Mo	3	...	55	30	1.00
	FP5	...	5Cr–½Mo	5B	(5)	60	30	1.00
A 369	FP9	...	9Cr–1Mo	5B	(5)	60	30	1.00
	FP11	...	1¼Cr–½Mo–Si	4	...	60	30	1.00

Copyright ASME International
Provided by IHS under license with ASME
No reproduction or networking permitted without license from IHS
Not for Resale

Table A-2 Low and Intermediate Alloy Steel

Maximum Allowable Stress Values in Tension, ksi, for Metal Temperature, °F, Not Exceeding																
−20 to 400	500	600	650	700	750	800	850	900	950	1,000	1,050	1,100	1,150	1,200	Grade	Spec. No.
															Seamless Pipe and Tube	
...	13.3	13.1	12.9	12.8	12.4	12.1	11.6	10.9	8.0	5.8	4.2	2.9	2.0	1.3	T5	A 199
...	13.3	13.1	12.9	12.8	12.4	12.1	11.6	11.0	10.3	7.4	5.0	3.3	2.2	1.5	T9	
14.0	13.5	13.1	12.8	12.6	12.3	12.0	11.7	11.3	9.3	6.3	4.2	2.8	1.9	1.2	T11	A 199
15.0	15.0	15.0	15.0	14.8	14.5	13.9	13.2	12.0	9.0	7.0	5.5	4.0	2.7	1.5	T21	
15.0	15.0	15.0	15.0	15.0	15.0	15.0	14.4	13.6	10.8	8.0	5.7	3.8	2.4	1.4	T22	
15.0	15.0	15.0	15.0	15.0	14.8	14.4	14.0	13.7	9.2	5.9	...	...	...	...	T2	A 213
...	14.4	14.1	13.9	13.7	13.2	12.8	12.1	10.9	8.0	5.8	4.2	2.9	1.8	1.0	T5	
...	14.4	14.1	13.9	13.7	13.2	12.8	12.1	10.9	8.0	5.8	4.2	2.9	1.8	1.0	T5b	
...	14.4	14.1	13.9	13.7	13.2	12.8	12.1	10.9	8.0	5.8	4.2	2.9	1.8	1.0	T5c	A 213
...	14.4	14.2	13.9	13.7	13.2	12.8	12.1	11.4	10.6	7.4	5.0	3.3	2.2	1.5	T9	
15.0	15.0	15.0	15.0	15.0	14.8	14.4	14.0	13.6	9.3	6.3	4.2	2.8	...	...	T11	
15.0	15.0	15.0	15.0	15.0	15.0	15.0	14.6	14.0	11.3	7.2	4.5	2.8	...	...	T12	A 213
15.0	15.0	15.0	15.0	14.8	14.5	13.9	13.2	12.0	9.0	7.0	5.5	4.0	...	...	T21	
15.0	15.0	15.0	15.0	15.0	15.0	15.0	14.4	13.6	10.8	8.0	5.7	3.8	...	...	T22	
...	21.1	20.8	20.5	20.0	19.4	18.7	17.8	16.7	15.5	14.3	12.9	10.3	7.0	4.3	T91	
...	21.1	20.8	20.5	20.0	19.4	18.7	17.8	16.7	15.5	14.3	12.9	9.6	7.0	4.3	T91	
16.3	16.3	16.3	16.3	...	...	...	...	...	...	...	...	...	...	...	3	A 333
15.0	15.0	15.0	15.0	...	...	...	...	...	...	...	...	...	...	...	4	
16.3	16.3	16.3	16.3	...	...	...	...	...	...	...	...	...	...	...	7	
...	...	...	...	...	...	...	...	...	...	...	...	...	...	...	9	
13.8	13.8	13.8	13.8	13.8	13.8	13.5	13.1	...	...	...	...	...	...	...	P1	A 335
13.8	13.8	13.8	13.8	13.8	13.8	13.8	13.8	13.3	9.2	5.9	...	...	...	...	P2	
...	14.4	14.1	13.9	13.7	13.2	12.8	12.1	10.9	8.0	5.8	4.2	2.9	1.8	1.0	P5	
...	14.4	14.1	13.9	13.7	13.2	12.8	12.1	10.9	8.0	5.8	4.2	2.9	1.8	1.0	P5b	
...	14.4	14.1	13.9	13.7	13.2	12.8	12.1	10.9	8.0	5.8	4.2	2.9	1.8	1.0	P5c	A 335
...	14.4	14.2	13.9	13.7	13.2	12.8	12.1	11.4	10.6	7.4	5.0	3.3	2.2	1.5	P9	
15.0	15.0	15.0	15.0	15.0	14.8	14.4	14.0	13.6	9.3	6.3	4.2	2.8	...	...	P11	
15.0	15.0	15.0	15.0	15.0	15.0	15.0	14.6	14.0	11.3	7.2	4.5	2.8	...	...	P12	A 335
15.0	15.0	15.0	15.0	14.8	14.5	13.9	13.2	12.0	9.0	7.0	5.5	4.0	...	...	P21	
15.0	15.0	15.0	15.0	15.0	15.0	15.0	14.4	13.6	10.8	8.0	5.7	3.8	...	...	P22	
...	21.1	20.8	20.5	20.0	19.4	18.7	17.8	16.7	15.5	14.3	12.9	10.3	7.0	4.3	P91	
...	21.1	20.8	20.5	20.0	19.4	18.7	17.8	16.7	15.5	14.3	12.9	9.6	7.0	4.3	P91	
13.8	13.8	13.8	13.8	13.8	13.8	13.5	13.2	...	...	...	...	...	...	...	FP1	A 369
13.8	13.8	13.8	13.8	13.8	13.8	13.8	13.8	13.3	9.2	5.9	...	...	...	...	FP2	
...	14.4	14.2	13.9	13.7	13.2	12.8	12.1	10.9	8.0	5.8	4.2	2.9	1.8	1.0	FP5	
...	14.4	14.2	13.9	13.7	13.2	12.8	12.1	11.4	10.6	7.4	5.0	3.3	2.2	1.5	FP9	A 369
15.0	15.0	15.0	15.0	15.0	14.8	14.4	14.0	13.6	9.3	6.3	4.2	2.8	...	...	FP11	

Copyright ASME International
Provided by IHS under license with ASME
No reproduction or networking permitted without license from IHS
Not for Resale

Table A-2 Low and Intermediate Alloy Steel (Cont'd)

Spec. No.	Grade	Type or Class	Nominal Composition	P-No.	Notes	Specified Minimum Tensile, ksi	Specified Minimum Yield, ksi	*E* or *F*
Seamless Pipe and Tube (Cont'd)								
A 369	FP12	...	1Cr–½Mo	4	...	60	32	1.00
	FP21	...	3Cr–1Mo	5A	...	60	30	1.00
	FP22	...	2¼Cr–1Mo	5A	(17)	60	30	1.00
A 714	V	...	2Ni–1Cu	9A	(1)(5)	65	46	1.00
Centrifugally Cast Pipe								
A 426	CP1	...	C–½Mo	3	(1)(2)(3)(4)(7)	65	35	0.85
	CP2	...	½Cr–½Mo	3	(1)(3)(4)(7)	60	30	0.85
	CP5	...	5Cr–½Mo	5B	(1)(3)(4)(5)(7)	90	60	0.85
	CP5B	...	5Cr–½Mo–Si	5B	(1)(3)(4)(5)(7)	60	30	0.85
A 426	CP9	...	9Cr–1Mo	5B	(1)(3)(4)(5)(7)	90	60	0.85
	CP11	...	1¼Cr–½Mo	4	(1)(3)(4)(7)	70	40	0.85
A 426	CP12	...	1Cr–½Mo	4	(1)(3)(4)(7)	60	30	0.85
	CP21	...	3Cr–1Mo	5A	(1)(3)(4)(5)(7)	60	30	0.85
	CP22	...	2¼Cr–1Mo	5A	(1)(3)(4)(5)(7)(17)	70	40	0.85
Electric Resistance Welded Pipe								
A 333	3	...	3½Ni	9B	(1)	65	35	0.85
	7	...	2½Ni	9A	(1)	65	35	0.85
	9	...	2Ni–1Cu	9A	(1)(5)	63	46	0.85
A 714	V	E	2Ni–Cu	9A	(1)(5)	65	46	0.85
Electric Fusion Welded Pipe — Filler Metal Added								
A 672	L65	20,23,30,33,40,43	C–½Mo	3	(1)	65	37	0.90
	L65	21,22,31,32,41,42	C–½Mo	3	(1)	65	37	1.00
A 672	L70	20,23,30,33,40,43	C–½Mo	3	(1)	70	40	0.90
	L70	21,22,31,32,41,42	C–½Mo	3	(1)	70	40	1.00
A 672	L75	20,23,30,33,40,43	C–½Mo	3	(1)	75	43	0.90
	L75	21,22,31,32,41,42	C–½Mo	3	(1)	75	43	1.00
A 691	CM65	20,23,30,33,40,43	C–½Mo	3	(1)	65	37	0.90
	CM65	21,22,31,32,41,42	C–½Mo	3	(1)	65	37	1.00
A 691	CM70	20,23,30,33,40,43	C–½Mo	3	(1)	70	40	0.90
	CM70	21,22,31,32,41,42	C–½Mo	3	(1)	70	40	1.00
A 691	CM75	20,23,30,33,40,43	C–½Mo	3	(1)	75	43	0.90
	CM75	21,22,31,32,41,42	C–½Mo	3	(1)	75	43	1.00
A 691	½Cr	20,23	½Cr–½Mo	3	(1)(11)	55	33	0.90
	½Cr	21,22	½Cr–½Mo	3	(1)(11)	55	33	1.00
	½Cr	20,23,30,33,40,43	½Cr–½Mo	3	(1)(12)	70	45	0.90
	½Cr	21,22,31,32,41,42	½Cr–½Mo	3	(1)(12)	70	45	1.00

Copyright ASME International
Provided by IHS under license with ASME
No reproduction or networking permitted without license from IHS
Not for Resale

Table A-2 Low and Intermediate Alloy Steel (Cont'd)

Maximum Allowable Stress Values in Tension, ksi, for Metal Temperature, °F, Not Exceeding																
−20 to 400	500	600	650	700	750	800	850	900	950	1,000	1,050	1,100	1,150	1,200	Grade	Spec. No.
															Seamless Pipe and Tube (Cont'd)	
15.0	15.0	15.0	15.0	15.0	15.0	15.0	14.6	14.0	11.3	7.2	4.5	2.8	...	...	FP12	A 369
15.0	15.0	15.0	15.0	14.8	14.5	13.9	13.2	12.0	9.0	7.0	5.5	4.0	...	...	FP21	
15.0	15.0	15.0	15.0	15.0	15.0	15.0	14.4	13.6	10.8	8.0	5.7	3.8	...	...	FP22	
...	...	...	...	...	...	...	...	...	...	...	...	...	...	...	V	A 714
															Centrifugally Cast Pipe	
13.9	13.9	13.9	13.9	13.9	13.8	13.4	13.0	...	...	...	...	...	...	...	CP1	A 426
12.8	12.8	12.8	12.8	12.8	12.6	12.2	11.9	11.6	7.8	5.0	...	...	...	...	CP2	
...	18.4	18.1	17.8	17.4	16.8	16.2	12.1	9.2	6.8	4.9	3.6	2.5	1.5	0.85	CP5	
...	12.2	12.1	11.8	11.6	11.2	10.9	10.3	9.3	6.8	4.9	3.6	2.5	1.5	0.85	CP5b	
...	18.4	18.1	17.7	17.4	16.8	16.2	15.5	14.0	9.4	6.3	4.3	2.8	1.9	1.3	CP9	A 426
14.9	14.9	14.9	14.9	14.9	14.9	14.9	14.5	11.6	7.9	5.4	3.6	2.4	...	...	CP11	
12.8	12.8	12.8	12.8	12.6	12.4	12.2	11.9	11.6	9.6	6.1	3.8	2.4	...	...	CP12	A 426
...	12.3	12.3	12.3	12.3	12.3	11.8	11.2	10.2	7.7	6.0	4.7	3.4	...	...	CP21	
...	14.3	14.3	14.2	14.1	13.7	13.3	12.8	12.1	9.7	6.6	4.3	2.7	...	...	CP22	
															Electric Resistance Welded Pipe	
13.8	13.8	13.8	13.8	...	...	...	...	...	...	...	...	...	...	...	3	A 333
13.8	13.8	13.8	13.8	...	...	...	...	...	...	...	...	...	...	...	7	
...	...	...	...	...	...	...	...	...	...	...	...	...	...	...	9	
...	...	...	...	...	...	...	...	...	...	...	...	...	...	...	V	A 714
															Electric Fusion Welded Pipe — Filler Metal Added	
14.7	14.7	14.7	14.7	14.7	14.7	14.2	13.8	...	...	...	...	...	...	...	L65	A 672
16.3	16.3	16.3	16.3	16.3	16.3	15.8	15.3	...	...	...	...	...	...	...	L65	
15.8	15.8	15.8	15.8	15.8	15.8	15.8	15.4	...	...	...	...	...	...	...	L70	A 672
17.5	17.5	17.5	17.5	17.5	17.5	17.5	17.1	...	...	...	...	...	...	...	L70	
16.9	16.9	16.9	16.9	16.9	16.9	16.9	16.5	...	...	...	...	...	...	...	L75	A 672
18.8	18.8	18.8	18.8	18.8	18.8	18.8	18.3	...	...	...	...	...	...	...	L75	
14.7	14.7	14.7	14.7	14.7	14.7	14.2	13.8	...	...	...	...	...	...	...	CM65	A 691
16.3	16.3	16.3	16.3	16.3	16.3	15.8	15.3	...	...	...	...	...	...	...	CM65	
15.8	15.8	15.8	15.8	15.8	15.8	15.8	15.4	...	...	...	...	...	...	...	CM70	A 691
17.5	17.5	17.5	17.5	17.5	17.5	17.5	17.1	...	...	...	...	...	...	...	CM70	
16.9	16.9	16.9	16.9	16.9	16.9	16.9	16.5	...	...	...	...	...	...	...	CM75	A 691
18.8	18.8	18.8	18.8	18.8	18.8	18.8	18.3	...	...	...	...	...	...	...	CM75	
12.4	12.4	12.4	12.4	12.4	12.4	12.4	12.1	11.5	8.3	5.3	...	...	...	...	$^1/_2$Cr	A 691
13.8	13.8	13.8	13.8	13.8	13.8	13.8	13.4	12.8	9.2	5.9	...	...	...	...	$^1/_2$Cr	
15.8	15.8	15.8	15.8	15.8	15.8	15.8	15.8	15.2	8.3	5.3	...	...	...	...	$^1/_2$Cr	
17.5	17.5	17.5	17.5	17.5	17.5	17.5	17.5	16.9	9.2	5.9	...	...	...	...	$^1/_2$Cr	

Copyright ASME International
Provided by IHS under license with ASME
No reproduction or networking permitted without license from IHS
Not for Resale

Table A-2 Low and Intermediate Alloy Steel (Cont'd)

Spec. No.	Grade	Type or Class	Nominal Composition	P-No.	Notes	Specified Minimum Tensile, ksi	Specified Minimum Yield, ksi	*E* or *F*
Electric Fusion Welded Pipe – Filler Metal Added (Cont'd)								
A 691	1Cr	20,23	1Cr–½Mo	4	(1)(11)	55	33	0.90
	1Cr	21,22	1Cr–½Mo	4	(1)(11)	55	33	1.00
	1Cr	20,23,30,33,40,43	1Cr–½Mo	4	(1)(12)	65	40	0.90
	1Cr	21,22,31,32,41,42	1Cr–½Mo	4	(1)(12)	65	40	1.00
A 691	1¼Cr	20,23	1¼Cr–½Mo–Si	4	(1)(11)	60	35	0.90
	1¼Cr	21,22	1¼Cr–½Mo–Si	4	(1)(11)	60	35	1.00
	1¼Cr	20,23,30,33,40,43	1¼Cr–½Mo–Si	4	(1)(12)	75	45	0.90
	1¼Cr	21,22,31,32,41,42	1¼Cr–½Mo–Si	4	(1)(12)	75	45	1.00
A 691	2¼Cr	20,23	2¼Cr–1Mo	5A	(1)(11)(17)	60	30	0.90
	2¼Cr	21,22	2¼Cr–1Mo	5A	(1)(11)(17)	60	30	1.00
	2¼Cr	20,23,30,33,40,43	2¼Cr–1Mo	5A	(1)(5)(12)(17)	75	45	0.90
	2¼Cr	21,22,31,32,41,42	2¼Cr–1Mo	5A	(1)(5)(12)(17)	75	45	1.00
A 691	3Cr	20,23	3Cr–1Mo	5A	(1)(11)	60	30	0.90
	3Cr	21,22	3Cr–1Mo	5A	(1)(11)	60	30	1.00
	3Cr	20,23,30,33,40,43	3Cr–1Mo	5A	(1)(5)(12)	75	45	0.90
	3Cr	21,22,31,32,41,42	3Cr–1Mo	5A	(1)(5)(12)	75	45	1.00
A 691	5Cr	20,23	5Cr–½Mo	5B	(1)(5)(11)	60	30	0.90
	5Cr	21,22	5Cr–½Mo	5B	(1)(5)(11)	60	30	1.00
	5Cr	20,23,30,33,40,43	5Cr–½Mo	5B	(1)(5)(12)	75	45	0.90
	5Cr	21,22,31,32,41,42	5Cr–½Mo	5B	(1)(5)(12)	75	45	1.00
A 691	91	40,43,50,53	9Cr–1Mo–V	5B	(1)(5)(12)(17)	85	60	0.90
	91	41,42,52,53	9Cr–1Mo–V	5B	(1)(5)(12)(17)	85	60	1.00
Plate								
A 387	2	1	½Cr–½Mo	3	. . .	55	33	1.00
	2	2	½Cr–½Mo	3	(1)	70	45	1.00
	5	1	5Cr–½Mo	5B	(5)	60	30	1.00
	5	2	5Cr–½Mo	5B	(1)(5)	75	45	1.00
A 387	11	1	1¼Cr–½Mo–Si	4	. . .	60	35	1.00
	11	2	1½Cr–½Mo–Si	4	. . .	75	45	1.00
	12	1	1Cr–½Mo	4	. . .	55	33	1.00
	12	2	1Cr–½Mo	4	. . .	65	40	1.00
A 387	21	1	3Cr–1Mo	5A	. . .	60	30	1.00
	21	2	3Cr–1Mo	5A	(5)	75	45	1.00
	22	1	2¼Cr–1Mo	5A	(17)	60	30	1.00
	22	2	2¼Cr–1Mo	5A	(5)(17)	75	45	1.00
A 387	91	2	9Cr–1Mo–V	5B	(5)(19)	85	60	1.00
	91	2	9Cr–1Mo–V	5B	(5)(20)	85	60	1.00

Copyright ASME International
Provided by IHS under license with ASME
No reproduction or networking permitted without license from IHS
Not for Resale

Table A-2 Low and Intermediate Alloy Steel (Cont'd)

Maximum Allowable Stress Values in Tension, ksi, for Metal Temperature, °F, Not Exceeding																
−20 to 400	500	600	650	700	750	800	850	900	950	1,000	1,050	1,100	1,150	1,200	Grade	Spec. No.
Electric Fusion Welded Pipe — Filler Metal Added (Cont'd)																
12.4	12.4	12.4	12.4	12.4	12.4	12.4	12.1	11.5	10.2	6.5	4.1	2.5	...	...	1Cr	A 691
13.8	13.8	13.8	13.8	13.8	13.8	13.8	13.4	12.9	11.3	7.2	4.5	2.8	...	...	1Cr	
14.7	14.7	14.7	14.7	14.7	14.7	14.7	14.2	13.6	10.2	6.5	4.1	2.5	...	...	1Cr	
16.3	16.3	16.3	16.3	16.3	16.3	16.3	15.8	15.2	11.3	7.2	4.5	2.8	...	...	1Cr	
13.5	13.5	13.5	13.5	13.5	13.5	13.5	13.1	12.3	8.4	5.7	3.8	2.5	...	...	$1^1/_4$Cr	A 691
15.0	15.0	15.0	15.0	15.0	15.0	15.0	14.6	13.7	9.3	6.3	4.2	2.8	...	...	$1^1/_4$Cr	
16.9	16.9	16.9	16.9	16.9	16.9	16.9	16.5	12.3	8.4	5.7	3.8	2.5	...	...	$1^1/_4$Cr	
18.8	18.8	18.8	18.8	18.8	18.8	18.8	18.3	13.7	9.3	6.3	4.2	2.8	...	...	$1^1/_4$Cr	
13.5	13.5	13.5	13.5	13.5	13.5	13.5	13.0	12.2	9.7	7.2	5.1	3.4	...	...	$2^1/_4$Cr	A 691
15.0	15.0	15.0	15.0	15.0	15.0	15.0	14.4	13.6	10.8	8.0	5.7	3.8	...	...	$2^1/_4$Cr	
...	16.1	16.0	15.9	15.8	15.5	15.2	14.8	14.2	10.3	7.0	4.6	2.9	...	...	$2^1/_4$Cr	
...	17.9	17.8	17.7	17.5	17.2	16.9	16.4	15.8	11.4	7.8	5.1	3.2	...	...	$2^1/_4$Cr	
13.5	13.5	13.5	13.5	13.3	13.1	12.5	11.9	10.8	8.1	6.3	5.0	3.6	...	...	3Cr	A 691
15.0	15.0	15.0	15.0	14.8	14.5	13.9	13.2	12.0	9.0	7.0	5.5	4.0	...	...	3Cr	
...	16.1	16.0	15.9	15.8	15.5	15.2	14.8	11.8	8.6	6.1	4.4	2.9	...	...	3Cr	
...	17.9	17.8	17.7	17.5	17.2	16.9	16.4	13.1	9.5	6.8	4.9	3.2	...	...	3Cr	
...	13.0	12.7	12.5	12.3	11.9	11.5	10.9	9.8	7.2	5.2	3.8	2.6	1.6	0.90	5Cr	A 691
...	14.4	14.1	13.9	13.7	13.2	12.8	12.1	10.9	8.0	5.8	4.2	2.9	1.8	1.0	5Cr	
...	16.2	15.9	15.7	15.4	14.9	14.4	13.6	9.8	7.2	5.2	3.8	2.6	1.6	0.90	5Cr	
...	18.0	17.7	17.4	17.1	16.5	16.0	15.1	10.9	8.0	5.8	4.2	2.9	1.8	1.0	5Cr	
...	18.9	18.7	18.4	18.0	17.4	16.8	16.0	15.0	13.9	12.8	11.6	8.6	6.3	3.8	91	A 691
...	21.1	20.8	20.5	20.0	19.4	18.7	17.8	16.7	15.5	14.3	12.9	9.6	7.0	4.3	91	
Plate																
13.8	13.8	13.8	13.8	13.8	13.8	13.8	13.4	12.8	9.2	5.9	...	...	...	...	2	A 387
17.5	17.5	17.5	17.5	17.5	17.5	17.5	17.5	16.9	9.2	5.9	...	...	...	...	2	
...	14.4	14.1	13.9	13.7	13.2	12.8	12.1	10.9	8.0	5.8	4.2	2.9	1.8	1.0	5	
...	18.0	17.7	17.4	17.1	16.5	16.0	15.1	10.9	8.0	5.8	4.2	2.9	1.8	1.0	5	
15.0	15.0	15.0	15.0	15.0	15.0	15.0	14.6	13.7	9.3	6.3	4.2	2.8	...	...	11	A 387
18.8	18.8	18.8	18.8	18.8	18.8	18.8	18.3	13.7	9.3	6.3	4.2	2.8	...	...	11	
13.8	13.8	13.8	13.8	13.8	13.8	13.8	13.4	12.9	11.3	7.2	4.5	2.8	...	...	12	
16.3	16.3	16.3	16.3	16.3	16.3	16.3	15.8	15.2	11.3	7.2	4.5	2.8	...	...	12	
15.0	15.0	15.0	15.0	14.8	14.5	13.9	13.2	12.0	9.0	7.0	5.5	4.0	...	...	21	A 387
...	17.9	17.8	17.7	17.5	17.2	16.9	16.4	13.1	9.5	6.8	4.9	3.2	...	...	21	
15.0	15.0	15.0	15.0	15.0	15.0	15.0	14.4	13.6	10.8	8.0	5.7	3.8	...	...	22	
...	17.9	17.8	17.7	17.5	17.2	16.9	16.4	15.8	11.4	7.8	5.1	3.2	...	...	22	
...	21.1	20.8	20.5	20.0	19.4	18.7	17.8	16.7	15.5	14.3	12.9	10.3	7.0	4.3	91	A 387
...	21.1	20.8	20.5	20.0	19.4	18.7	17.8	16.7	15.5	14.3	12.9	9.6	7.0	4.3	91	

Copyright ASME International
Provided by IHS under license with ASME
No reproduction or networking permitted without license from IHS
Not for Resale

Table A-2 Low and Intermediate Alloy Steel (Cont'd)

Spec. No.	Grade	Type or Class	Nominal Composition	P-No.	Notes	Specified Minimum Tensile, ksi	Specified Minimum Yield, ksi	*E* or *F*
Forgings								
A 182	F1	...	C–½Mo	3	(2)	70	40	1.00
	F2	...	½Cr–½Mo	3	...	70	40	1.00
	F5	...	5Cr–½Mo	5B	(5)	70	40	1.00
	F5a	...	5Cr–½Mo	5B	(5)	90	65	1.00
A 182	F9	...	9Cr–1Mo	5B	(5)	85	55	1.00
	F91	...	9Cr–1Mo–V	5B	(5)	85	60	1.00
	F11	Class 1	1½Cr–½Mo–Si	4	...	60	30	1.00
	F11	Class 2	1¼Cr–¼Mo–Si	4	...	70	40	1.00
	F12	Class 1	1Cr–½Mo	4	...	60	30	1.00
	F12	Class 2	1Cr–½Mo	4	...	70	40	1.00
	F21	...	3Cr–1Mo	5A	(5)	75	45	1.00
	F22	Class 1	2¼Cr–1Mo	5A	(17)	60	30	1.00
	F22	Class 3	2¼Cr–1Mo	5A	(5)(17)	75	45	1.00
A 336	F11	Class 1	1¼Cr–½Mo–Si	4	...	60	30	1.00
	F11	Class 2	1¼Cr–½Mo–Si	4	...	70	40	1.00
	F12	...	1Cr–½Mo	4	...	70	40	1.00
	F22	Class 1	2¼Cr–1Mo	5A	(17)	60	30	1.00
	F22	Class 3	2¼Cr–1Mo	5A	(5)(17)	75	45	1.00
	F91	...	9Cr–1Mo–V	5B	(5)(19)	85	60	1.00
	F91	...	9Cr–1Mo–V	5B	(5)(20)	85	60	1.00
A 350	LF3	...	3½Ni	9B	(1)	70	40	1.00
	LF4	...	¾Cr–¾Ni–Cu–Al	4	(1)	60	...	1.00
	LF5	Class 1	1½Ni	9A	(1)(5)	60	30	1.00
	LF5	Class 2	1½Ni	9A	(1)(5)	70	37	1.00
	LF9	...	2Ni–1Cu	9A	(1)(5)	63	46	1.00
Wrought Fittings (Seamless and Welded)								
A 234	WP1	...	C–½Mo	3	(2)	55	30	1.00
	WP5	...	5Cr–½Mo	5B	...	60	30	1.00
	WP11	...	1¼Cr–½Mo	4	...	60	30	1.00
	WP12	(1)	1Cr–½Mo	4	(6)	60	30	1.00
A 234	WP22	...	2¼Cr–1Mo	5A	(17)	60	30	1.00
	WP91	...	9Cr–1Mo–V	5B	(5)(19)	85	60	1.00
	WP91	...	9Cr–1Mo–V	5B	(5)(20)	85	60	1.00

Copyright ASME International
Provided by IHS under license with ASME
No reproduction or networking permitted without license from IHS
Not for Resale

Table A-2 Low and Intermediate Alloy Steel (Cont'd)

Maximum Allowable Stress Values in Tension, ksi, for Metal Temperature, °F, Not Exceeding																
−20 to 400	500	600	650	700	750	800	850	900	950	1,000	1,050	1,100	1,150	1,200	Grade	Spec. No.
																Forgings
17.5	17.5	17.5	17.5	17.5	17.5	17.5	17.1	...	...	...	...	...	...	...	F1	A 182
17.5	17.5	17.5	17.5	17.5	17.5	17.5	17.5	16.9	9.2	5.9	...	...	...	...	F2	
...	16.8	16.5	16.3	16.0	15.4	14.9	14.1	10.8	8.0	5.8	4.2	2.9	1.8	1.0	F5	
...	21.6	21.3	20.9	20.5	19.8	19.1	14.3	10.9	8.0	5.8	4.2	2.9	1.8	1.0	F5a	
...	20.4	20.1	19.7	19.4	18.7	18.1	17.1	16.2	11.0	7.4	5.0	3.3	2.2	1.5	F9	A 182
...	21.1	20.8	20.5	20.0	19.4	18.7	17.8	16.7	15.5	14.3	12.9	10.3	7.0	4.3	F91	
15.0	15.0	15.0	15.0	15.0	14.8	14.4	14.0	13.6	9.3	6.3	4.2	2.8	...	...	F11	
17.5	17.5	17.5	17.5	17.5	17.5	17.5	17.1	13.7	9.3	6.3	4.2	2.8	...	...	F11	
15.0	15.0	15.0	15.0	14.8	14.6	14.3	14.0	13.6	11.3	7.2	4.5	2.8	...	...	F12	
17.5	17.5	17.5	17.5	17.5	17.5	17.5	17.0	16.4	11.3	7.2	4.5	2.8	...	...	F12	
...	17.9	17.8	17.7	17.5	17.2	16.9	16.4	13.1	9.5	6.8	4.9	3.2	...	...	F21	
15.0	15.0	15.0	15.0	15.0	15.0	15.0	14.4	13.6	10.8	8.0	5.7	3.8	...	...	F22	
...	17.9	17.8	17.7	17.5	17.2	16.9	16.4	15.8	11.4	7.8	5.1	3.2	...	...	F22	
15.0	15.0	15.0	15.0	15.0	14.8	14.4	14.0	13.6	9.3	6.3	4.2	2.8	...	...	F11	A 336
17.5	17.5	17.5	17.5	17.5	17.5	17.5	17.1	13.7	9.3	6.3	4.2	2.8	...	...	F11	
17.5	17.5	17.5	17.5	17.5	17.5	17.5	17.0	16.4	11.3	7.2	4.5	2.8	...	...	F12	
15.0	15.0	15.0	15.0	15.0	15.0	15.0	14.4	13.6	10.8	8.0	5.7	3.8	...	...	F22	
...	17.9	17.8	17.7	17.5	17.2	16.9	16.4	15.8	11.4	7.8	5.1	3.2	...	...	F22	
...	21.1	20.8	20.5	20.0	19.4	18.7	17.8	16.7	15.5	14.3	12.9	10.3	7.0	4.3	F91	
...	21.1	20.8	20.5	20.0	19.4	18.7	17.8	16.7	15.5	14.3	12.9	9.6	7.0	4.3	F91	
17.5	17.5	17.5	17.5	...	...	...	...	...	...	...	...	...	...	...	LF3	A 350
15.0	15.0	15.0	15.0	...	...	...	...	...	...	...	...	...	...	...	LF4	
...	13.4	...	...	...	...	...	...	...	...	...	...	...	...	...	LF5	
...	15.6	...	...	...	...	...	...	...	...	...	...	...	...	...	LF5	
...	...	...	...	...	...	...	...	...	...	...	...	...	...	...	LF9	
																Wrought Fittings (Seamless and Welded)
13.8	13.8	13.8	13.8	13.8	13.8	13.5	13.2	...	...	...	...	...	...	...	WP1	A 234
14.4	14.4	14.1	13.9	13.7	13.2	12.8	12.1	10.9	8.0	5.8	4.2	2.9	1.8	1.0	WP5	
15.0	15.0	15.0	15.0	15.0	14.8	14.4	14.0	13.6	9.3	6.3	4.2	2.8	...	...	WP11	
15.0	15.0	15.0	15.0	15.0	14.8	14.4	14.0	13.6	9.3	6.3	4.2	2.8	...	...	WP12	
15.0	15.0	15.0	15.0	15.0	15.0	15.0	14.4	13.6	10.8	8.0	5.7	3.8	...	...	WP22	A 234
...	21.1	20.8	20.5	20.0	19.4	18.7	17.8	16.7	15.5	14.3	12.9	10.3	7.0	4.3	WP91	
...	21.1	20.8	20.5	20.0	19.4	18.7	17.8	16.7	15.5	14.3	12.9	9.6	7.0	4.3	WP91	

Copyright ASME International
Provided by IHS under license with ASME
No reproduction or networking permitted without license from IHS
Not for Resale

Table A-2 Low and Intermediate Alloy Steel (Cont'd)

Spec. No.	Grade	Type or Class	Nominal Composition	P-No.	Notes	Specified Minimum Tensile, ksi	Specified Minimum Yield, ksi	*E* or *F*
Castings								
A 217	WC1	...	C–½Mo	3	(2)(3)(4)	65	35	0.80
	WC4	...	1Ni–½Cr–½Mo	4	(3)(4)	70	40	0.80
	WC5	...	¾Ni–1Mo–¾Cr	4	(3)(4)	70	40	0.80
	WC6	...	1¼Cr–½Mo	4	(3)(4)	70	40	0.80
A 217	WC9	...	2¼Cr–1Mo	5A	(3)(4)(5)	70	40	0.80
	C5	...	5Cr–½Mo	5B	(3)(4)(5)	90	60	0.80
	C12	...	9Cr–1Mo	5B	(3)(4)(5)	90	60	0.80
	C12A	...	9Cr–1Mo–V	5B	(3)(4)(5)	85	...	0.80
Bolts, Nuts, and Studs								
A 193	B5	...	5Cr–½Mo	...	(8)(9)(13)	100	80	1.00
	B7	...	1Cr–⅕Mo	...	(14)	125	105	1.00
	B7	...	1Cr–⅕Mo	...	(15)	115	95	1.00
	B7	...	1Cr–⅕Mo	...	(16)	100	75	1.00
	B7M	...	1Cr–⅕Mo	...	(1)(14)	100	80	1.00
A 193	B16	...	1Cr–½Mo–V	...	(14)	125	105	1.00
	B16	...	1Cr–½Mo–V	...	(15)	110	95	1.00
	B16	...	1Cr–½Mo–V	...	(16)	100	85	1.00
A 194	3	...	5Cr–½Mo–V	...	(10)	...	...	...
	4	...	C–Mo	...	(2)(10)	...	...	...
	7	...	Cr–Mo	...	(10)	...	...	...
A 320	L7	...	1Cr–⅕Mo	...	(1)(8)(18)	125	105	1.00
	L7M	...	1Cr–⅕Mo	...	(1)(14)	100	80	1.00
	L43	...	1¾Ni–¾Cr–¼Mo	...	(1)(8)(18)	125	105	1.00
A 354	BC	...	Alloy Steel	...	(8)(9)(14)	125	109	1.00
	BC	...	Alloy Steel	...	(8)(9)(15)	115	99	1.00
	BD	...	Alloy Steel	...	(8)(9)(14)	150	130	1.00
	BD	...	Alloy Steel	...	(8)(9)(15)	140	120	1.00

Copyright ASME International
Provided by IHS under license with ASME
No reproduction or networking permitted without license from IHS
Not for Resale

Table A-2 Low and Intermediate Alloy Steel (Cont'd)

Maximum Allowable Stress Values in Tension, ksi, for Metal Temperature, °F, Not Exceeding																
−20 to 400	500	600	650	700	750	800	850	900	950	1,000	1,050	1,100	1,150	1,200	Grade	Spec. No.
																Castings
13.0	13.0	13.0	13.0	13.0	13.0	12.6	12.2	...	...	...	...	...	...	...	WC1	A 217
14.0	14.0	14.0	14.0	14.0	14.0	14.0	13.7	12.0	7.4	4.7	...	...	...	...	WC4	
14.0	14.0	14.0	14.0	14.0	14.0	14.0	13.7	13.0	8.8	5.5	3.7	2.2	...	...	WC5	
14.0	14.0	14.0	14.0	14.0	14.0	14.0	13.7	11.0	7.4	5.0	3.4	2.2	...	...	WC6	
...	13.4	13.4	13.4	13.3	12.9	12.6	12.0	11.4	9.1	6.2	4.1	2.6	...	...	WC9	A 217
...	17.3	17.0	16.7	16.4	15.8	15.3	11.4	8.7	6.4	4.6	3.4	2.3	1.4	0.80	C5	
...	17.3	17.0	16.7	16.4	15.8	15.3	14.6	13.2	8.8	5.9	4.0	2.6	1.7	1.2	C12	
...	15.4	15.0	14.7	14.5	14.2	13.8	13.4	12.9	12.4	11.4	9.1	7.0	5.2	3.4	C12A	
																Bolts, Nuts, and Studs
20.0	20.0	20.0	20.0	20.0	20.0	18.5	14.5	10.4	7.6	5.6	4.2	3.1	2.0	1.3	B5	A 193
25.0	25.0	25.0	25.0	25.0	23.5	21.0	17.0	12.5	8.5	4.5	...	...	...	...	B7	
23.0	23.0	23.0	23.0	23.0	22.2	20.0	16.3	12.5	8.5	4.5	...	...	...	...	B7	
18.8	18.8	18.8	18.8	18.8	18.8	18.0	16.3	12.5	8.5	4.5	...	...	...	...	B7	
20.0	20.0	20.0	20.0	20.0	20.0	13.5	16.2	12.5	8.5	4.5	...	...	...	...	B7M	
25.0	25.0	25.0	25.0	25.0	25.0	25.0	23.5	20.5	16.0	11.0	6.3	2.8	...	...	B16	A 193
22.0	22.0	22.0	22.0	22.0	22.0	22.0	21.0	18.5	15.3	11.0	6.3	2.8	...	...	B16	
20.0	20.0	20.0	20.0	20.0	20.0	20.0	18.8	16.7	14.3	11.0	6.3	2.8	...	...	B16	
...	...	...	...	...	...	...	...	...	...	...	...	...	...	...	3	A 194
...	...	...	...	...	...	...	...	...	...	...	...	...	...	...	4	
...	...	...	...	...	...	...	...	...	...	...	...	...	...	...	7	
25.0	25.0	25.0	25.0	25.0	...	...	...	...	...	...	...	...	...	...	L7	A 320
20.0	20.0	20.0	20.0	20.0	20.0	18.5	16.2	12.5	8.5	4.5	...	...	...	...	L7M	
25.0	25.0	25.0	25.0	25.0	...	...	...	...	...	...	...	...	...	...	L43	
25.0	25.0	25.0	25.0	...	...	...	...	...	...	...	...	...	...	...	BC	A 354
23.0	23.0	23.0	23.0	...	...	...	...	...	...	...	...	...	...	...	BC	
30.0	30.0	30.0	30.0	...	...	...	...	...	...	...	...	...	...	...	BD	
28.0	28.0	28.0	28.0	...	...	...	...	...	...	...	...	...	...	...	BD	

Copyright ASME International
Provided by IHS under license with ASME
No reproduction or networking permitted without license from IHS
Not for Resale

Table A-2 Low and Intermediate Alloy Steel (Cont'd)

GENERAL NOTES:

(a) The tabulated specifications are ANSI/ASTM or ASTM. For ASME Boiler and Pressure Vessel Code applications, see related specifications in Section II of the ASME Code.
(b) The stress values in this Table may be interpolated to determine values for intermediate temperatures.
(c) The P-Numbers indicated in this Table are identical to those adopted by the ASME Boiler and Pressure Vessel Code, Section IX, except as modified by para. 127.5
(d) Tensile strengths and allowable stresses shown in "ksi" are "thousands of pounds per square inch."
(e) The materials listed in this Table shall not be used at design temperatures above those for which allowable stress values are given.
(f) The tabulated stress values are $S \times E$ (weld joint efficiency factor) or $S \times F$ (material quality factor), as applicable. Weld joint efficiency factors are shown in Table 102.4.3.
(g) Pressure-temperature ratings of piping components, as published in standards referenced in this Code, may be used for components meeting the requirements of those standards. The allowable stress values given in this Table are for use in designing piping components which are not manufactured in accordance with referenced standards.
(h) All the materials listed are classifed as ferritic [see Table 104.1.2(A)].

NOTES:

(1) THIS MATERIAL IS NOT ACCEPTABLE FOR USE ON BOILER EXTERNAL PIPING — SEE FIGS. 100.1.2(A) AND (B).
(2) Upon prolonged exposure to temperature above 875°F, the carbide phase of carbon-molybdenum steel may be converted to graphite.
(3) These allowable stress values apply to normalized and tempered material only.
(4) The material quality factors and allowable stress values for these materials may be increased in accordance with para. 102.4.6.
(5) At 400°F and below, the following allowable stress values apply:

Spec. No.	Grade	Type or Class	Specified Minimum Tensile, ksi	Specified Minimum Yield, ksi	*E* or *F*	Metal Temperature, °F			
						−20 to 100	200	300	400
A 182	F5	...	70	40	1.00	17.5	17.5	17.0	16.8
	F5a	...	90	65	1.00	22.5	22.4	21.8	21.6
	F9	...	85	55	1.00	21.3	21.2	20.6	20.4
A 182	F21	...	75	45	1.00	18.8	18.8	18.3	18.0
	F22	Class 3	75	45	1.00	18.8	18.8	18.3	18.0
	F91	...	85	60	1.00	21.3	21.3	21.2	21.2
A 199	T5	...	60	25	1.00	15.0	14.1	13.6	13.4
	T9	...	60	25	1.00	15.0	14.1	13.6	13.4
A 213	T5	...	60	30	1.00	15.0	15.0	14.5	14.4
	T5b	...	60	30	1.00	15.0	15.0	14.5	14.4
	T5c	...	60	30	1.00	15.0	15.0	14.5	14.4
A 213	T9	...	60	30	1.00	15.0	15.0	14.5	14.4
	T91	...	85	60	1.00	21.3	21.3	21.2	21.2
A 217	WC9	...	70	40	0.80	14.0	14.0	13.8	13.5
	C5	...	90	60	0.80	18.0	17.9	17.4	17.3
	C12	...	90	60	0.80	18.0	17.9	17.4	17.3
	C12A	...	85	...	0.80	17.0	17.0	16.5	15.9
A 333	9	Seamless	63	46	1.00	15.8	...	...	...
	9	Welded	63	46	0.85	13.4	...	...	...
A 335	P5	...	60	30	1.00	15.0	15.0	14.5	14.4
	P5b	...	60	30	1.00	15.0	15.0	14.5	14.4
	P5c	...	60	30	1.00	15.0	15.0	14.5	14.4
	P9	...	60	30	1.00	15.0	15.0	14.5	14.4
	P91	...	85	60	1.00	21.3	21.3	21.2	21.2

Copyright ASME International
Provided by IHS under license with ASME
No reproduction or networking permitted without license from IHS
Not for Resale

Table A-2 Low and Intermediate Alloy Steel (Cont'd) (04)

NOTES (Cont'd):

Spec. No.	Grade	Type or Class	Specified Minimum Tensile, ksi	Specified Minimum Yield, ksi	*E* or *F*	Metal Temperature, °F −20 to 100	200	300	400
A 336	F22	Class 3	75	45	1.00	18.8	18.8	18.3	18.0
	F91	. . .	85	60	1.00	21.3	21.3	21.2	21.2
A 350	LF5	Class 1	60	30	1.00	15.0	14.4	13.7	13.4
	LF5	Class 2	70	37	1.00	17.5	16.8	16.0	15.6
	LF9	. . .	63	46	1.00	15.8	. . .	. . .	. . .
A 369	FP5	. . .	60	30	1.00	15.0	15.0	14.5	14.4
	FP9	. . .	60	30	1.00	15.0	15.0	14.5	14.4
A 387	5	1	60	30	1.00	15.0	15.0	14.5	14.4
	5	2	75	45	1.00	18.8	18.7	18.2	18.0
	21	2	75	45	1.00	18.8	18.8	18.3	18.0
	22	2	75	45	1.00	18.8	18.8	18.3	18.0
A 387	91	2	85	60	1.00	21.3	21.3	21.2	21.2
	91	2	85	60	0.90	19.1	19.1	19.0	19.0
A 426	CP5	. . .	90	60	0.85	19.1	19.0	18.5	18.4
	CP5b	. . .	60	30	0.85	12.8	12.8	12.3	12.2
	CP9	. . .	90	60	0.85	19.1	19.0	18.5	18.4
	CP21	. . .	60	. . .	0.85	12.8	12.8	12.5	12.3
	CP22	. . .	70	40	0.85	14.9	14.9	14.7	14.4
A 691	$2\frac{1}{4}$Cr	20,23,30,33,40,43	75	45	0.90	16.9	16.9	16.5	16.2
	$2\frac{1}{4}$Cr	21,22,31,32,41,42	75	45	1.00	18.8	18.8	18.3	18.0
A 691	3Cr	20,23,30,33,40,43	75	45	0.90	16.9	16.9	16.5	16.2
	3Cr	21,22,31,32,41,42	75	45	1.00	18.8	18.8	18.3	18.0
A 691	5Cr	20,23	60	30	0.90	13.5	13.5	13.1	13.0
	5Cr	21,22	60	30	1.00	15.0	15.0	14.5	14.4
	5Cr	20,23,30,33,40,43	75	45	0.90	16.9	16.8	16.4	16.2
	5Cr	21,22,31,32,41,42	75	45	1.00	18.8	18.7	18.2	18.0
A 714	V	S	65	46	1.00	15.8	. . .	. . .	. . .
	V	E	65	46	0.85	13.4	. . .	. . .	. . .

(6) If A 234 Grade WP-12 fittings are made from A 387 Grade 12 annealed plate, the allowable stress values shall be reduced by the ratio of 55 divided by 60 in the temperature range −20°F through 850°F. At 900°F through 1100°F, the values shown may be used.

(7) The mutual quality factor for centrifugally cast pipe (0.85) is based on all surfaces being machined, after heat treatment, to a surface finish of 250 μin. arithmetic average deviation or better.

(8) These allowable stress values are established from a consideration of strength only and will be satisfactory for average service. For bolted joints, where freedom from leakage over a long period of time without retightening is required, lower stress values may be necessary as determined from the relative flexibility of the flange and bolts and corresponding relaxation properties.

(9) Between temperatures of −20°F and 400°F, allowable stress values equal to the lower of the following may be used: 20% of the specified tensile strength, or 25% of the specified yield strength.

(10) This is a product specification. Allowable stress values are not necessary. Limitations on metal temperature for materials covered by this specification for use under ASME B31.1 are:

Grade 3	−20°F to 1,100°F
Grade 4	−20°F to 900°F
Grade 7	−20°F to 1,100°F

Copyright ASME International
Provided by IHS under license with ASME
No reproduction or networking permitted without license from IHS
Not for Resale

(04)

Table A-2 Low and Intermediate Alloy Steel (Cont'd)

NOTES (Cont'd):

(11) These allowable stress values are for pipe fabricated from ASTM A 387 Class 1 plate in the annealed condition.
(12) These allowable stress values are for pipe fabricated from ASTM A 387 Class 2 plate.
(13) These allowable stress values apply to bolting materials 4 in. in diameter and smaller.
(14) These allowable stress values apply to bolting materials $2^1/_2$ in. and smaller but not larger than 4 in. in diameter.
(15) These allowable stress values apply to bolting materials larger than $2^1/_2$ in. but not larger than 4 in. in diameter.
(16) These allowable stress values apply to bolting materials larger than 4 in. but not larger than 7 in. in diameter.
(17) For use at temperatures above 850°F, the carbon content of the base material and, where applicable, weld filler metal shall be 0.05% or higher. See para. 124.2(D).
(18) Minimum tempering temperature shall be 800°F.
(19) These allowable stress values apply to thickness less than 3 in.
(20) These allowable stress values apply to thickness 3 in. or greater.

Copyright ASME International
Provided by IHS under license with ASME
No reproduction or networking permitted without license from IHS Not for Resale

Table A-3 begins on the next page.

Copyright ASME International
Provided by IHS under license with ASME
No reproduction or networking permitted without license from IHS
Not for Resale

Table A-3 Stainless Steels

Spec. No.	Type or Grade	Class	UNS Alloy No.	Nominal Composition	P-No.	Notes	Specified Minimum Tensile, ksi	Specified Minimum Yield, ksi	*E* or *F*
Seamless Pipe and Tube									
Austenitic									
A 213	TP304	...	S30400	18Cr–8Ni	8	(10)	75	30	1.00
	TP304	...	S30400	18Cr–8Ni	8	(9)(10)	75	30	1.00
	TP304H	...	S30409	18Cr-8Ni	8	...	75	30	1.00
	TP304H	...	S30409	18Cr–8Ni	8	(9)	75	30	1.00
A 213	TP304L	...	S30403	18Cr–8Ni	8	(1)	70	25	1.00
	TP304L	...	S30403	18Cr–8Ni	8	(1)(9)	70	25	1.00
	TP304N	...	S30451	18Cr–8Ni–N	8	(10)	80	35	1.00
	TP304N	...	S30451	18Cr–8Ni–N	8	(9)(10)	80	35	1.00
A 213	...	...	S30815	21Cr–11Ni–N	8	(1)	87	45	1.00
	...	...	S30815	21Cr–11Ni–N	8	(1)(9)	87	45	1.00
A 213	TP309H		S30909	23Cr–12Ni	8	(9)	75	30	1.00
	TP309H		S30909	23Cr–12Ni	8	...	75	30	1.00
	TP310H		S31009	25Cr–20Ni	8	(9)	75	30	1.00
	TP310H		S31009	25Cr–20Ni	8	...	75	30	1.00
A 213	TP316	...	S31600	16Cr–12Ni–2Mo	8	(10)	75	30	1.00
	TP316	...	S31600	16Cr–12Ni–2Mo	8	(9)(10)	75	30	1.00
	TP316H	...	S31609	16Cr–12Ni–2Mo	8	...	75	30	1.00
	TP316H	...	S31609	16Cr–12Ni–2Mo	8	(9)	75	30	1.00
A 213	TP316L	...	S31603	16Cr–12Ni–2Mo	8	(1)	70	25	1.00
	TP316L	...	S31603	16Cr–12Ni–2Mo	8	(1)(9)	70	25	1.00
	TP316N	...	S31651	16Cr–12Ni–2Mo–N	8	(10)	80	35	1.00
	TP316N	...	S31651	16Cr–12Ni–2Mo–N	8	(9)(10)	80	35	1.00
A 213	TP321	...	S32100	18Cr–10Ni–Ti	8	(10)	75	30	1.00
	TP321	...	S32100	18Cr–10Ni–Ti	8	(9)(10)	75	30	1.00
	TP321H	...	S32109	18Cr–10Ni–Ti	8	...	75	30	1.00
	TP321H	...	S32109	18Cr–10Ni–Ti	8	(9)	75	30	1.00
A 213	TP347	...	S34700	18Cr–10Ni–Cb	8	(10)	75	30	1.00
	TP347	...	S34700	18Cr–10Ni–Cb	8	(9)(10)	75	30	1.00
	TP347H	...	S34709	18Cr–10Ni–Cb	8	...	75	30	1.00
	TP347H	...	S34709	18Cr–10Ni–Cb	8	(9)	75	30	1.00
A 213	TP348	...	S34800	18Cr–10Ni–Cb	8	(10)	75	30	1.00
	TP348	...	S34800	18Cr–10Ni–Cb	8	(9)(10)	75	30	1.00
	TP348H	...	S34809	18Cr–10Ni–Cb	8	...	75	30	1.00
	TP348H	...	S34809	18Cr–10Ni–Cb	8	(9)	75	30	1.00
A 312	TP304	...	S30400	18Cr–8Ni	8	(10)	75	30	1.00
	TP304	...	S30400	18Cr–8Ni	8	(9)(10)	75	30	1.00
	TP304H	...	S30409	18Cr–8Ni	8	...	75	30	1.00
	TP304H	...	S30409	18Cr–8Ni	8	(9)	75	30	1.00

Copyright ASME International
Provided by IHS under license with ASME
No reproduction or networking permitted without license from IHS
Not for Resale

Table A-3 Stainless Steels

Maximum Allowable Stress Values in Tension, ksi, for Metal Temperature, °F, Not Exceeding																		Type or Grade	Spec. No.
−20 to 100	200	300	400	500	600	650	700	750	800	850	900	950	1,000	1,050	1,100	1,150	1,200		
																		Seamless Pipe and Tube Austenitic	
18.8	15.7	14.1	13.0	12.2	11.4	11.3	11.1	10.8	10.6	10.4	10.2	10.0	9.8	9.5	8.9	7.7	6.1	TP304	A 213
18.8	17.8	16.6	16.2	15.9	15.9	15.9	15.9	15.6	15.2	14.9	14.7	14.4	13.8	12.2	9.8	7.7	6.1	TP304	
18.8	15.7	14.1	13.0	12.2	11.4	11.3	11.1	10.8	10.6	10.4	10.2	10.0	9.8	9.5	8.9	7.7	6.1	TP304H	
18.8	17.8	16.6	16.2	15.9	15.9	15.9	15.9	15.6	15.2	14.9	14.7	14.4	13.8	12.2	9.8	7.7	6.1	TP304H	
15.7	13.4	12.0	11.0	10.3	9.7	9.5	9.4	9.2	9.1	...	...	...	...	...	...	...	...	TP304L	A 213
15.7	15.7	15.3	14.7	14.4	14.0	13.7	13.5	13.3	13.0	...	...	...	...	...	...	...	...	TP304L	
20.0	17.9	15.7	14.1	13.0	12.4	12.2	11.9	11.8	11.6	11.3	11.1	10.8	10.6	10.3	9.8	7.7	6.1	TP304N	
20.0	20.0	19.0	18.3	17.6	17.4	17.3	17.2	16.9	16.7	16.3	15.9	15.6	15.0	12.4	9.8	7.7	6.1	TP304N	
24.9	24.7	22.0	19.9	18.5	17.7	17.4	17.2	17.0	16.8	16.6	16.4	16.2	14.9	11.6	9.0	6.9	5.2	...	A 213
24.9	24.7	23.3	22.4	21.8	21.4	21.2	21.0	20.8	20.6	20.3	20.0	19.1	14.9	11.6	9.0	6.9	5.2	...	
18.8	18.8	18.7	18.3	17.9	17.5	17.3	17.1	16.8	16.5	16.1	15.6	15.1	13.8	10.3	7.6	5.5	4.0	TP309H	A 213
18.8	17.6	16.1	15.1	14.1	13.9	13.7	13.5	13.3	13.1	12.9	12.7	12.5	12.3	10.3	7.6	5.5	4.0	TP309H	
18.8	18.4	17.6	17.4	17.4	17.4	17.4	17.4	17.2	17.0	16.7	16.3	15.9	13.8	10.3	7.6	5.5	4.0	TP310H	
18.8	17.6	16.1	15.1	14.3	13.7	13.5	13.3	13.1	12.9	12.7	12.5	12.3	12.1	10.3	7.6	5.5	4.0	TP310H	
18.8	16.2	14.6	13.4	12.5	11.8	11.6	11.3	11.2	11.0	10.9	10.8	10.7	10.6	10.5	10.3	9.3	7.4	TP316	A 213
18.8	18.8	18.4	18.1	18.0	17.0	16.7	16.3	16.1	15.9	15.7	15.6	15.4	15.3	14.5	12.4	9.8	7.4	TP316	
18.8	16.2	14.6	13.4	12.5	11.8	11.6	11.3	11.2	11.0	10.9	10.8	10.7	10.6	10.5	10.3	9.3	7.4	TP316H	
18.8	18.8	18.4	18.1	18.0	17.0	16.7	16.3	16.1	15.9	15.7	15.6	15.4	15.3	14.5	12.4	9.8	7.4	TP316H	
15.7	13.3	11.9	10.8	10.0	9.4	9.2	9.0	8.8	8.6	8.4	...	...	...	...	...	...	...	TP316L	A 213
15.7	15.7	15.7	15.5	14.4	13.5	13.2	12.9	12.6	12.4	12.1	...	...	...	...	...	...	...	TP316L	
20.0	19.4	17.8	16.5	15.4	14.6	14.2	13.9	13.6	13.3	13.1	12.8	12.6	12.4	12.2	11.7	9.8	7.4	TP316N	
20.0	20.0	19.2	18.8	18.6	18.6	18.6	18.6	18.5	18.4	18.3	18.1	17.8	17.4	15.8	12.4	9.8	7.4	TP316N	
18.8	15.9	14.2	12.9	12.0	11.4	11.2	11.0	10.9	10.8	10.7	10.6	10.6	10.4	9.2	6.9	5.0	3.6	TP321	A 213
18.8	18.4	17.3	17.1	17.1	16.4	16.1	15.8	15.7	15.5	15.4	15.3	15.2	13.8	9.6	6.9	5.0	3.6	TP321	
18.8	15.9	14.2	12.9	12.0	11.4	11.2	11.0	10.9	10.8	10.7	10.6	10.6	10.5	10.1	8.8	6.9	5.4	TP321H	
18.8	18.4	17.3	17.1	17.1	16.4	16.1	15.8	15.7	15.5	15.4	15.3	15.2	14.0	11.7	9.1	6.9	5.4	TP321H	
18.8	17.3	16.1	15.0	14.1	13.4	13.2	12.9	12.8	12.7	12.7	12.6	12.6	12.5	11.9	9.1	6.1	4.4	TP347	A 213
18.8	17.9	16.4	15.5	14.9	14.7	14.7	14.7	14.7	14.7	14.7	14.7	14.6	14.0	12.1	9.1	6.1	4.4	TP347	
18.8	17.3	16.1	15.0	14.1	13.4	13.2	12.8	12.8	12.7	12.7	12.6	12.6	12.6	12.5	12.1	10.5	7.9	TP347H	
18.8	17.9	16.4	15.5	14.9	14.7	14.7	14.7	14.7	14.7	14.7	14.7	14.6	14.4	14.1	13.0	10.5	7.9	TP347H	
18.8	17.3	16.1	15.0	14.1	13.4	13.2	12.9	12.8	12.7	12.7	12.6	12.6	12.5	11.9	9.1	6.1	4.4	TP348	A 213
18.8	17.9	16.4	15.5	14.9	14.7	14.7	14.7	14.7	14.7	14.7	14.7	14.6	14.0	12.1	9.1	6.1	4.4	TP348	
18.8	17.3	16.1	15.0	14.1	13.4	13.2	12.8	12.8	12.7	12.7	12.6	12.6	12.6	12.5	12.1	10.5	7.9	TP348H	
18.8	17.9	16.4	15.5	14.9	14.7	14.7	14.7	14.7	14.7	14.7	14.7	14.6	14.4	14.1	13.0	10.5	7.9	TP348H	
18.8	15.7	14.1	13.0	12.2	11.4	11.3	11.1	10.8	10.6	10.4	10.2	10.0	9.8	9.5	8.9	7.7	6.1	TP304	A 312
18.8	17.8	16.6	16.2	15.9	15.9	15.9	15.9	15.6	15.2	14.9	14.7	14.4	13.8	12.2	9.8	7.7	6.1	TP304	
18.8	15.7	14.1	13.0	12.2	11.4	11.3	11.1	10.8	10.6	10.4	10.2	10.0	9.8	9.5	8.9	7.7	6.1	TP304H	
18.8	17.8	16.6	16.2	15.9	15.9	15.9	15.9	15.6	15.2	14.9	14.7	14.4	13.8	12.2	9.8	7.7	6.1	TP304H	

Copyright ASME International
Provided by IHS under license with ASME
No reproduction or networking permitted without license from IHS
Not for Resale

(04)

Table A-3 Stainless Steels (Cont'd)

Spec. No.	Type or Grade	Class	UNS Alloy No.	Nominal Composition	P-No.	Notes	Specified Minimum Tensile, ksi	Specified Minimum Yield, ksi	*E* or *F*
Seamless Pipe and Tube (Cont'd)									
Austenitic (Cont'd)									
A 312	TP304L	...	S30403	18Cr–8Ni	8	(1)	70	25	1.00
	TP304L	...	S30403	18Cr–8Ni	8	(1)(9)	70	25	1.00
	TP304N	...	S30451	18Cr–8Ni–N	8	(10)	80	35	1.00
	TP304N	...	S30451	18Cr–8Ni–N	8	(9)(10)	80	35	1.00
A 312	...	...	S30815	21Cr–11Ni–N	8	(1)	87	45	1.00
	...	...	S30815	21Cr–11Ni–N	8	(1)(9)	87	45	1.00
A 312	TP309H		S30909	23Cr–12Ni	8	(9)	75	30	1.00
	TP309H		S30909	23Cr–12Ni	8	...	75	30	1.00
	TP310H		S31009	25Cr–20Ni	8	(9)	75	30	1.00
	TP310H		S31009	25Cr–20Ni	8	...	75	30	1.00
A 312	TP316	...	S31600	16Cr–12Ni–2Mo	8	(10)	75	30	1.00
	TP316	...	S31600	16Cr–12Ni–2Mo	8	(9)(10)	75	30	1.00
	TP316H	...	S31609	16Cr–12Ni–2Mo	8	...	75	30	1.00
	TP316H	...	S31609	16Cr–12Ni–2Mo	8	(9)	75	30	1.00
A 312	TP316L	...	S31603	16Cr–12Ni–2Mo	8	(1)	70	25	1.00
	TP316L	...	S31603	16Cr–12Ni–2Mo	8	(1)(9)	70	25	1.00
	TP316N	...	S31651	16Cr–12Ni–2Mo–N	8	(10)	80	35	1.00
	TP316N	...	S31651	16Cr–12Ni–2Mo–N	8	(9)(10)	80	35	1.00
A 312	TP317	...	S31700	18Cr–13Ni–3Mo	8	(1)(10)	75	30	1.00
	TP317	...	S31700	18Cr–13Ni–3Mo	8	(1)(9)(10)	75	30	1.00
	TP321	...	S32100	18Cr–10Ni–Ti	8	(10)	75	30	1.00
	TP321	...	S32100	18Cr–10Ni–Ti	8	(9)(10)	75	30	1.00
	TP321H	...	S32109	18Cr–10Ni–Ti	8	...	75	30	1.00
	TP321H	...	S32109	18Cr–10Ni–Ti	8	(9)	75	30	1.00
A 312	TP347	...	S34700	18Cr–10Ni–Cb	8	(10)	75	30	1.00
	TP347	...	S34700	18Cr–10Ni–Cb	8	(9)(10)	75	30	1.00
	TP347H	...	S34709	18Cr–10Ni–Cb	8	...	75	30	1.00
	TP347H	...	S34709	18Cr–10Ni–Cb	8	(9)	75	30	1.00
A 312	TP348	...	S34800	18Cr–10Ni–Cb	8	(10)	75	30	1.00
	TP348	...	S34800	18Cr–10Ni–Cb	8	(9)(10)	75	30	1.00
	TP348H	...	S34809	18Cr–10Ni–Cb	8	...	75	30	1.00
	TP348H	...	S34809	18Cr–10Ni–Cb	8	(9)	75	30	1.00
A 312	TPXM15	...	S38100	18Cr–18Ni–2Si	8	(1)	75	30	1.00
	TPXM15	...	S38100	18Cr–18Ni–2Si	8	(1)(9)	75	30	1.00
	TPXM19	...	S20910	22Cr–13Ni–5Mn	8	(1)	100	55	1.00
	TPXM19	...	S20910	22Cr–13Ni–5Mn	8	(1)(9)	100	55	1.00
	...	...	S31254	20Cr–18Ni–6Mo	8	(1)(32)	94	44	1.00
	...	...	S31254	20Cr–18Ni–6Mo	8	(1)(9)(32)	94	44	1.00

Copyright ASME International
Provided by IHS under license with ASME
No reproduction or networking permitted without license from IHS
Not for Resale

Table A-3 Stainless Steels (Cont'd) (04)

Maximum Allowable Stress Values in Tension, ksi, for Metal Temperature, °F, Not Exceeding																		Type or Grade	Spec. No.
−20 to 100	200	300	400	500	600	650	700	750	800	850	900	950	1,000	1,050	1,100	1,150	1,200		
																		Seamless Pipe and Tube (Cont'd) Austenitic (Cont'd)	
15.7	13.4	12.0	11.0	10.3	9.7	9.5	9.4	9.2	9.1	...	...	...	...	...	...	...	...	TP304L	A 312
15.7	15.7	15.3	14.7	14.4	14.0	13.7	13.5	13.3	13.0	...	...	...	...	...	...	...	...	TP304L	
20.0	17.9	15.7	14.1	13.0	12.4	12.2	11.9	11.8	11.6	11.3	11.1	10.8	10.6	10.3	9.8	7.7	6.1	TP304N	
20.0	20.0	19.0	18.3	17.8	17.4	17.3	17.2	16.9	16.7	16.3	15.9	15.6	15.0	12.4	9.8	7.7	6.1	TP304N	
24.9	24.7	22.0	19.9	18.5	17.7	17.4	17.2	17.0	16.8	16.6	16.4	16.2	14.9	11.6	9.0	6.9	5.2	...	A 312
24.9	24.7	23.3	22.4	21.8	21.4	21.2	21.0	20.8	20.6	20.3	20.0	19.1	14.9	11.6	9.0	6.9	5.2	...	
18.8	18.8	18.7	18.3	17.9	17.5	17.3	17.1	16.8	16.5	16.1	15.6	15.1	13.8	10.3	7.6	5.5	4.0	TP309H	A 312
18.8	17.6	16.1	15.1	14.1	13.9	13.7	13.5	13.3	13.1	12.9	12.7	12.5	12.8	10.3	7.6	5.5	4.0	TP309H	
18.8	18.4	17.6	17.4	17.4	17.4	17.4	17.4	17.2	17.0	16.7	16.3	15.9	13.8	10.3	7.6	5.5	4.0	TP310H	
18.8	17.6	16.1	15.1	14.3	13.7	13.5	13.3	13.1	12.9	12.7	12.5	12.3	12.1	10.3	7.6	5.5	4.0	TP310H	
18.8	16.2	14.6	13.4	12.5	11.8	11.6	11.3	11.2	11.0	10.9	10.8	10.7	10.6	10.5	10.3	9.3	7.4	TP316	A 312
18.8	18.8	18.4	18.1	18.0	17.0	16.7	16.3	16.1	15.9	15.7	15.6	15.4	15.3	14.5	12.4	9.8	7.4	TP316	
18.8	16.2	14.6	13.4	12.5	11.8	11.6	11.3	11.2	11.0	10.9	10.8	10.7	10.6	10.5	10.3	9.3	7.4	TP316H	
18.8	18.8	18.4	18.1	18.0	17.0	16.7	16.3	16.1	15.9	15.7	15.6	15.4	15.3	14.5	12.4	9.8	7.4	TP316H	
15.7	13.3	11.9	10.8	10.0	9.4	9.2	9.0	8.8	8.6	8.4	...	...	...	...	...	...	...	TP316L	A 312
15.7	15.7	15.7	15.5	14.4	13.5	13.2	12.9	12.6	12.4	12.1	...	...	...	...	...	...	...	TP316L	
20.0	19.4	17.8	16.5	15.4	14.6	14.2	13.9	13.6	13.3	13.1	12.8	12.6	12.4	12.2	11.7	9.8	7.4	TP316N	
20.0	20.0	19.2	18.8	18.6	18.6	18.6	18.6	18.5	18.4	18.3	18.1	17.8	17.4	15.8	12.4	9.8	7.4	TP316N	
18.8	16.2	14.6	13.4	12.5	11.8	11.6	11.3	11.2	11.0	10.9	10.8	10.7	10.6	10.5	10.3	9.3	7.4	TP317	A 312
18.8	18.8	18.4	18.1	18.0	17.0	16.7	16.3	16.1	15.9	15.7	15.5	15.4	15.3	14.5	12.4	9.8	7.4	TP317	
18.8	15.9	14.2	12.9	12.0	11.4	11.2	11.0	10.9	10.8	10.7	10.6	10.6	10.4	9.2	6.9	5.0	3.6	TP321	
18.8	18.4	17.3	17.1	17.1	16.4	16.1	15.8	15.7	15.5	15.4	15.3	15.2	13.8	9.6	6.9	5.0	3.6	TP321	
18.8	15.9	14.2	12.9	12.0	11.4	11.2	11.0	10.9	10.8	10.7	10.6	10.6	10.5	10.1	8.8	6.9	5.4	TP321H	
18.8	18.4	17.3	17.1	17.1	16.4	16.1	15.8	15.7	15.5	15.4	15.3	15.2	14.0	11.7	9.1	6.9	5.4	TP321H	
18.8	17.3	16.1	15.0	14.1	13.4	13.2	12.9	12.8	12.7	12.7	12.6	12.6	12.5	11.9	9.1	6.1	4.4	TP347	A 312
18.8	17.9	16.4	15.5	14.9	14.7	14.7	14.7	14.7	14.7	14.7	14.7	14.6	14.0	12.1	9.1	6.1	4.4	TP347	
18.8	17.3	16.1	15.0	14.1	13.4	13.2	12.9	12.8	12.8	12.7	12.6	12.6	12.6	12.5	12.1	10.5	7.9	TP347H	
18.8	17.9	16.4	15.5	14.9	14.7	14.7	14.7	14.7	14.7	14.7	14.7	14.6	14.4	14.1	13.0	10.5	7.9	TP347H	
18.8	17.3	16.1	15.0	14.1	13.4	13.2	12.9	12.8	12.7	12.7	12.6	12.6	12.5	11.9	9.1	6.1	4.4	TP348	A 312
18.8	17.9	16.4	15.5	14.9	14.7	14.7	14.7	14.7	14.7	14.7	14.7	14.6	14.0	12.1	9.1	6.1	4.4	TP348	
18.8	17.3	16.1	15.0	14.1	13.4	13.2	12.9	12.8	12.8	12.7	12.6	12.6	12.5	12.5	12.1	10.5	7.9	TP348H	
18.8	17.9	16.4	15.5	14.9	14.7	14.7	14.7	14.7	14.7	14.7	14.7	14.6	14.4	14.1	13.0	10.5	7.9	TP348H	
18.8	15.6	14.0	12.9	12.1	11.4	11.2	11.0	10.8	10.5	10.3	10.1	9.9	9.7	...	...	...	...	TPXM15	A 312
18.8	17.7	16.6	16.1	15.9	15.9	15.9	15.9	15.5	15.1	14.9	14.6	14.3	13.7	...	...	...	...	TPXM15	
21.3	21.2	20.1	19.3	19.0	18.6	18.5	18.4	18.2	18.0	17.8	17.5	17.2	16.9	16.6	...	...	...	TPXM19	
28.6	28.4	26.9	26.0	25.5	25.1	24.9	24.7	24.5	24.2	23.9	23.6	23.2	22.8	22.3	...	...	...	TPXM19	
23.5	23.5	21.4	19.9	18.5	17.9	17.7	17.5	17.3	...	...	...	...	...	...	...	...	...	...	
23.5	23.5	22.4	21.3	20.5	20.1	19.9	19.9	19.8	...	...	...	...	...	...	...	...	...	...	

Copyright ASME International
Provided by IHS under license with ASME
No reproduction or networking permitted without license from IHS
Not for Resale

Table A-3 Stainless Steels (Cont'd)

Spec. No.	Type or Grade	Class	UNS Alloy No.	Nominal Composition	P-No.	Notes	Specified Minimum Tensile, ksi	Specified Minimum Yield, ksi	*E* or *F*
Seamless Pipe and Tube (Cont'd)									
Austenitic (Cont'd)									
A 376	TP304	...	S30400	18Cr–8Ni	8	(10)	75	30	1.00
	TP304	...	S30400	18Cr–8Ni	8	(9)(10)	75	30	1.00
	TP304H	...	S30409	18Cr–8Ni	8	...	75	30	1.00
	TP304H	...	S30409	18Cr–8Ni	8	(9)	75	30	1.00
	TP304N	...	S30451	18Cr–8Ni–N	8	(10)	80	35	1.00
	TP304N	...	S30451	18Cr–8Ni–N	8	(9)(10)	80	35	1.00
A 376	TP316	...	S31600	16Cr–12Ni–2Mo	8	(10)	75	30	1.00
	TP316	...	S31600	16Cr–12Ni–2Mo	8	(9)(10)	75	30	1.00
	TP316H	...	S31609	16Cr–12Ni–2Mo	8	...	75	30	1.00
	TP316H	...	S31609	16Cr–12Ni–2Mo	8	(9)	75	30	1.00
	TP316N	...	S31651	16Cr–12Ni–2Mo–N	8	(10)	80	35	1.00
	TP316N	...	S31651	16Cr–12Ni–2Mo–N	8	(9)(10)	80	35	1.00
A 376	TP321	...	S32100	18Cr–10Ni–Ti	8	(10)	75	30	1.00
	TP321	...	S32100	18Cr–10Ni–Ti	8	(9)(10)	75	30	1.00
	TP321H	...	S32109	18Cr–10Ni–Ti	8	...	75	30	1.00
	TP321H	...	S32109	18Cr–10Ni–Ti	8	(9)	75	30	1.00
A 376	TP347	...	S34700	18Cr–10Ni–Cb	8	(10)	75	30	1.00
	TP347	...	S34700	18Cr–10Ni–Cb	8	(9)(10)	75	30	1.00
	TP347H	...	S34709	18Cr–10Ni–Cb	8	...	75	30	1.00
	TP347H	...	S34709	18Cr–10Ni–Cb	8	(9)	75	30	1.00
A 376	TP348	...	S34800	18Cr–10Ni–Cb	8	(10)	75	30	1.00
	TP348	...	S34800	18Cr–10Ni–Cb	8	(9)(10)	75	30	1.00
A 430	FP304	...	S30400	18Cr–8Ni	8	(10)(11)	70	30	1.00
	FP304	...	S30400	18Cr–8Ni	8	(9)(10)(11)	70	30	1.00
	FP304H	...	S30409	18Cr–8Ni	8	...	70	30	1.00
	FP304H	...	S30409	18Cr–8Ni	8	(9)	70	30	1.00
	FP304N	...	S30451	18Cr–8Ni–N	8	(10)	75	35	1.00
	FP304N	...	S30451	18Cr–8Ni–N	8	(9)(10)	75	35	1.00
A 430	FP316	...	S31600	16Cr–12Ni–2Mo	8	(10)(11)	70	30	1.00
	FP316	...	S31600	16Cr–12Ni–2Mo	8	(9)(10)(11)	70	30	1.00
	FP316H	...	S31609	16Cr–12Ni–2Mo	8	...	70	30	1.00
	FP316H	...	S31609	16Cr–12Ni–2Mo	8	(9)	70	30	1.00
	FP316N	...	S31651	16Cr–12Ni–2Mo–N	8	(10)	75	35	1.00
	FP316N	...	S31651	16Cr–12Ni–2Mo–N	8	(9)(10)	75	35	1.00
A 430	FP321	...	S32100	18Cr–10Ni–Ti	8	(10)(11)	70	30	1.00
	FP321	...	S32100	18Cr–10Ni–Ti	8	(9)(10)(11)	70	30	1.00
	FP321H	...	S32109	18Cr–10Ni–Ti	8	...	70	30	1.00
	FP321H	...	S32109	18Cr–10Ni–Ti	8	(9)	70	30	1.00
A 430	FP347	...	S34700	18Cr–10Ni–Cb	8	(10)(11)	70	30	1.00
	FP347	...	S34700	18Cr–10Ni–Cb	8	(9)(10)(11)	70	30	1.00
	FP347H	...	S34709	18Cr–10Ni–Cb	8	...	70	30	1.00
	FP347H	...	S34709	18Cr–10Ni–Cb	8	(9)	70	30	1.00

Copyright ASME International
Provided by IHS under license with ASME
No reproduction or networking permitted without license from IHS
Not for Resale

Table A-3 Stainless Steels (Cont'd)

Maximum Allowable Stress Values in Tension, ksi, for Metal Temperature, °F, Not Exceeding																		Type or Grade	Spec. No.
−20 to 100	200	300	400	500	600	650	700	750	800	850	900	950	1,000	1,050	1,100	1,150	1,200		
																		Seamless Pipe and Tube (Cont'd) Austenitic (Cont'd)	
18.8	15.7	14.1	13.0	12.2	11.4	11.3	11.1	10.8	10.6	10.4	10.2	10.0	9.8	9.5	8.9	7.7	6.1	TP304	A 376
18.8	17.8	16.6	16.2	15.9	15.9	15.9	15.9	15.6	15.2	14.9	14.7	14.4	13.8	12.2	9.8	7.7	6.1	TP304	
18.8	15.7	14.1	13.0	12.2	11.4	11.3	11.1	10.8	10.6	10.4	10.2	10.0	9.8	9.5	8.9	7.7	6.1	TP304H	
18.8	17.8	16.6	16.2	15.9	15.9	15.9	15.9	15.6	15.2	14.9	14.7	14.4	13.8	12.2	9.8	7.7	6.1	TP304H	
20.0	17.9	15.7	14.1	13.0	12.4	12.2	11.9	11.8	11.6	11.3	11.1	10.8	10.6	10.3	9.8	7.7	6.1	TP304N	
20.0	20.0	19.0	18.3	17.8	17.4	17.3	17.2	16.9	16.7	16.3	15.9	15.6	15.0	12.4	9.8	7.7	6.1	TP304N	
18.8	16.2	14.6	13.4	12.5	11.8	11.6	11.3	11.2	11.0	10.9	10.8	10.7	10.6	10.5	10.3	9.3	7.4	TP316	A 376
18.8	18.8	18.4	18.1	18.0	17.0	16.7	16.3	16.1	15.9	15.7	15.6	15.4	15.3	14.5	12.4	9.8	7.4	TP316	
18.8	16.2	14.6	13.4	12.5	11.8	11.6	11.3	11.2	11.0	10.9	10.8	10.7	10.6	10.5	10.3	9.3	7.4	TP316H	
18.8	18.8	18.4	18.1	18.0	17.0	16.7	16.3	16.1	15.9	15.7	15.6	15.4	15.3	14.5	12.4	9.8	7.4	TP316H	
20.0	19.4	17.8	16.5	15.4	14.6	14.2	13.9	13.6	13.3	13.1	12.8	12.6	12.4	12.2	11.7	9.8	7.4	TP316N	
20.0	20.0	19.2	18.8	18.6	18.6	18.6	18.6	18.5	18.4	18.3	18.1	17.8	17.4	15.8	12.4	9.8	7.4	TP316N	
18.8	15.9	14.2	12.9	12.0	11.4	11.2	11.0	10.9	10.8	10.7	10.6	10.6	10.4	9.2	6.9	5.0	3.6	TP321	A 376
18.8	18.4	17.3	17.1	17.1	16.4	16.1	15.8	15.7	15.5	15.4	15.3	15.2	13.8	9.6	6.9	5.0	3.6	TP321	
18.8	15.9	14.2	12.9	12.0	11.4	11.2	11.0	10.9	10.8	10.7	10.6	10.6	10.5	10.1	8.8	6.9	5.4	TP321H	
18.8	18.4	17.3	17.1	17.1	16.4	16.1	15.8	15.7	15.5	15.4	15.3	15.2	14.0	11.7	9.1	6.9	5.4	TP321H	
18.8	17.3	16.1	15.0	14.1	13.4	13.2	12.9	12.8	12.7	12.7	12.6	12.6	12.5	11.9	9.1	6.1	4.4	TP347	A 376
18.8	17.9	16.4	15.5	14.9	14.7	14.7	14.7	14.7	14.7	14.7	14.7	14.6	14.0	12.1	9.1	6.1	4.4	TP347	
18.8	17.3	16.1	15.0	14.1	13.4	13.2	12.9	12.8	12.8	12.7	12.7	12.6	12.6	12.5	12.1	10.5	7.9	TP347H	
18.8	17.9	16.4	15.5	14.9	14.7	14.7	14.7	14.7	14.7	14.7	14.7	14.6	14.4	14.1	13.0	10.5	7.9	TP347H	
18.8	17.3	16.1	15.0	14.1	13.4	13.2	12.9	12.8	12.7	12.7	12.6	12.6	12.5	11.9	9.1	6.1	4.4	TP348	A 376
18.8	17.9	16.4	15.5	14.9	14.7	14.7	14.7	14.7	14.7	14.7	14.7	14.6	14.0	12.1	9.1	6.1	4.4	TP348	
17.5	15.7	14.1	13.0	12.2	11.4	11.3	11.1	10.8	10.6	10.4	10.2	10.0	9.8	9.5	8.9	7.7	6.1	FP304	A 430
17.5	16.6	15.5	15.1	14.8	14.8	14.8	14.8	14.7	14.6	14.4	14.2	13.9	13.4	12.0	9.7	7.7	6.1	FP304	
17.5	15.7	14.1	13.0	12.2	11.4	11.3	11.1	10.8	10.6	10.4	10.2	10.0	9.8	9.5	8.9	7.7	6.1	FP304H	
17.5	16.6	15.5	15.1	14.8	14.8	14.8	14.8	14.7	14.6	14.4	14.2	13.9	13.4	12.0	9.7	7.7	6.1	FP304H	
18.8	17.9	15.7	14.1	13.0	12.4	12.2	11.9	11.8	11.6	11.3	11.1	10.8	10.6	10.3	9.8	7.7	6.1	FP304N	
18.8	18.8	17.8	17.1	16.7	16.3	16.2	16.1	15.9	15.8	15.6	15.4	15.1	14.5	12.4	9.8	7.7	6.1	FP304N	
17.5	16.2	14.6	13.4	12.5	11.8	11.6	11.3	11.2	11.0	10.9	10.8	10.7	10.6	10.5	10.3	9.3	7.4	FP316	A 430
17.5	17.5	17.1	16.8	16.8	16.8	16.7	16.3	16.1	15.9	15.7	15.6	15.4	15.0	14.1	12.4	9.8	7.4	FP316	
17.5	16.2	14.6	13.4	12.5	11.8	11.6	11.3	11.2	11.0	10.9	10.8	10.7	10.6	10.5	10.3	9.3	7.4	FP316H	
17.5	17.5	17.1	16.8	16.8	16.8	16.7	16.3	16.1	15.9	15.7	15.6	15.4	15.0	14.1	12.4	9.8	7.4	FP316H	
18.8	18.8	17.8	16.5	15.4	14.6	14.2	13.9	13.6	13.3	13.1	12.8	12.6	12.4	12.2	11.7	9.8	7.4	FP316N	
18.8	18.8	18.0	17.6	17.4	17.4	17.4	17.4	17.4	17.3	17.1	17.0	16.7	16.3	15.7	12.4	9.8	7.4	FP316N	
17.5	15.9	14.2	12.9	12.0	11.4	11.2	11.0	10.9	10.8	10.7	10.6	10.6	10.4	9.2	6.9	5.0	3.6	FP321	A 430
17.5	17.2	16.2	16.0	16.0	16.0	16.0	15.8	15.7	15.5	15.4	15.3	15.2	13.8	9.6	6.9	5.0	3.6	FP321	
17.5	15.9	14.2	12.9	12.0	11.4	11.2	11.0	10.9	10.8	10.7	10.6	10.6	10.5	10.1	8.8	6.9	5.4	FP321H	
17.5	17.2	16.2	16.0	16.0	16.0	16.0	15.8	15.7	15.5	15.4	15.3	15.2	14.0	11.7	9.1	6.9	5.4	FP321H	
17.5	16.7	15.3	14.4	13.9	13.4	13.2	12.9	12.8	12.7	12.7	12.6	12.6	12.5	11.9	9.1	6.1	4.4	FP347	A430
17.5	16.7	15.3	14.4	13.9	13.7	13.7	13.7	13.7	13.7	13.7	13.7	13.6	13.2	12.0	9.1	6.1	4.4	FP347	
17.5	16.7	15.3	14.4	13.9	13.4	13.2	12.9	12.8	12.7	12.7	12.6	12.6	12.6	12.5	12.1	10.5	7.9	FP347H	
17.5	16.7	15.3	14.4	13.9	13.7	13.7	13.7	13.7	13.7	13.7	13.7	13.6	13.5	13.2	12.5	10.5	7.9	FP347H	

Copyright ASME International
Provided by IHS under license with ASME
No reproduction or networking permitted without license from IHS
Not for Resale

Table A-3 Stainless Steels (Cont'd)

Spec. No.	Type or Grade	Class	UNS Alloy No.	Nominal Composition	P-No.	Notes	Specified Minimum Tensile, ksi	Specified Minimum Yield, ksi	*E* or *F*
Seamless Pipe and Tube (Cont'd)									
Ferritic/Martensitic									
A 268	TP405	...	S40500	12Cr–A1	7	(3)	60	30	1.00
	TP410	...	S41000	13Cr	6	...	60	30	1.00
	TP429	...	S42900	15Cr	6	(3)	60	35	1.00
	TP430	...	S43000	17Cr	7	(3)	60	35	1.00
	TPXM27	...	S44627	26Cr–1Mo	10I	(1)(2)(32)	65	40	1.00
	TP446-1	...	S44600	27Cr	10I	(32)	70	40	1.00
	TPXM33	...	S44626	27Cr–1Mo–Ti	10I	(2)(32)	68	45	1.00
A 731	TPXM27	...	S44627	27Cr–1Mo	10I	(2)(32)	65	40	1.00
	TPXM33	...	S44626	27Cr–1Mo–Ti	10I	(2)(32)	65	40	1.00
Centrifugally Cast Pipe									
Austenitic									
A 451	CPF8	...	J92600	18Cr–8Ni	8	(1)(8)(10)(26)	70	30	0.85
	CPF8	...	J92600	18Cr–8Ni	8	(1)(8)(9)(10)(26)	70	30	0.85
	CPF8C	...	J92710	18Cr–10Ni–Cb	8	(1)(8)(10)(26)	70	30	0.85
	CPF8C	...	J92710	18Cr–10Ni–Cb	8	(1)(8)(9)(10)(26)	70	30	0.85
	CPF8M	...	J92900	18Cr–9Ni–2Mo	8	(1)(8)(13)(26)	70	30	0.85
	CPF8M	...	J92900	18Cr–9Ni–2Mo	8	(1)(8)(9)(13)(26)	70	30	0.85
A 451	CPH8	...	J93400	25Cr–12Ni	8	(1)(8)(10)(26)	65	28	0.85
	CPH8	...	J93400	25Cr–12Ni	8	(1)(8)(9)(10)(26)	65	28	0.85
	CPH10	...	J93410	25Cr–12Ni	8	(1)(6)(8)(10)(26)	(70)	30	0.85
	CPH10	...	J93410	25Cr–12Ni	8	(1)(6)(8)(9)(10)(26)	(70)	30	0.85
A 451	CPH20	...	J93402	25Cr–12Ni	8	(1)(6)(8)(10)(26)	(70)	30	0.85
	CPH20	...	J93402	25Cr–12Ni	8	(1)(6)(8)(9)(10)(26)	(70)	30	0.85
	CPK20	...	J94202	25Cr–20Ni	8	(1)(8)(10)(26)	65	28	0.85
	CPK20	...	J94202	25Cr–20Ni	8	(1)(8)(9)(10)(26)	65	28	0.85
A 452	TP304H	...	J92590	18Cr–8Ni	8	(1)(8)(26)	75	30	0.85
	TP304H	...	J92590	18Cr–8Ni	8	(1)(8)(9)(26)	75	30	0.85
	TP316H	...	J92920	16Cr–12Ni–2Mo	8	(1)(8)(26)	75	30	0.85
	TP316H	...	J92920	16Cr–12Ni–2Mo	8	(1)(8)(9)(26)	75	30	0.85
	TP347H	...	J92660	18Cr–10Ni–Cb	8	(1)(8)(26)	75	30	0.85
	TP347H	...	J92660	18Cr–10Ni–Cb	8	(1)(8)(9)(26)	75	30	0.85
Welded Pipe and Tube — Without Filler Metal									
Austenitic									
A 249	TP304	...	S30400	18Cr–8Ni	8	(10)	75	30	0.85
	TP304	...	S30400	18Cr–8Ni	8	(9)(10)	75	30	0.85
	TP304H	...	S30409	18Cr–8Ni	8	...	75	30	0.85
	TP304H	...	S30409	18Cr–8Ni	8	(9)	75	30	0.85
A 249	TP304L	...	S30403	18Cr–8Ni	8	(1)	70	25	0.85
	TP304L	...	S30403	18Cr–8Ni	8	(1)(9)	70	25	0.85
	TP304N	...	S30451	18Cr–8Ni–N	8	(10)	80	35	0.85
	TP304N	...	S30451	18Cr–8Ni–N	8	(9)(10)	80	35	0.85

Copyright ASME International
Provided by IHS under license with ASME
No reproduction or networking permitted without license from IHS Not for Resale

Table A-3 Stainless Steels (Cont'd)

Maximum Allowable Stress Values in Tension, ksi, for Metal Temperature, °F, Not Exceeding																		Type or Grade	Spec. No.
−20 to 100	200	300	400	500	600	650	700	750	800	850	900	950	1,000	1,050	1,100	1,150	1,200		
																		Seamless Pipe and Tube (Cont'd) Ferritic/Martensitic	
15.0	14.3	13.8	13.3	12.9	12.4	12.3	12.1	...	...	...	...	...	...	...	...	...	...	TP405	A 268
15.0	14.3	13.8	13.3	12.9	12.4	12.3	12.1	...	...	...	...	...	...	...	...	...	...	TP410	
15.0	14.3	13.8	13.3	12.9	12.4	12.3	12.1	...	...	...	...	...	...	...	...	...	...	TP429	
15.0	14.3	13.8	13.3	12.9	12.4	12.3	12.1	...	...	...	...	...	...	...	...	...	...	TP430	
16.2	16.2	15.9	15.9	15.9	15.9	15.9	...	...	...	...	...	...	...	...	...	...	...	TPXM27	
17.5	16.6	16.1	15.6	15.0	14.5	14.3	...	...	...	...	...	...	...	...	...	...	...	TP446-1	
17.0	17.0	16.8	16.6	16.4	16.1	15.9	...	...	...	...	...	...	...	...	...	...	...	TPXM33	
16.2	16.2	15.9	15.9	15.9	15.9	15.9	...	...	...	...	...	...	...	...	...	...	...	TPXM27	A 731
16.3	16.3	16.1	15.9	15.7	15.4	15.2	...	...	...	...	...	...	...	...	...	...	...	TPXM33	
																		Centrifugally Cast Pipe Austenitic	
14.9	13.3	11.9	11.0	10.3	9.7	9.5	9.4	9.2	8.9	8.8	8.6	8.4	8.1	7.7	6.4	4.9	3.8	CPF8	A 451
14.9	14.0	12.8	12.8	12.6	12.6	12.6	12.6	12.5	12.4	12.2	12.0	11.4	10.2	8.2	6.4	4.9	3.8	CPF8	
14.9	14.1	13.0	12.2	11.8	11.4	11.1	11.0	10.9	10.8	10.7	10.7	10.6	10.1	9.5	8.9	6.8	4.2	CPF8C	
14.9	14.1	13.0	12.2	11.8	11.6	11.6	11.6	11.6	11.6	11.6	11.6	11.5	11.2	10.2	8.8	6.8	4.2	CPF8C	
14.9	13.7	12.4	11.3	10.5	10.0	9.8	9.6	9.4	9.4	9.3	9.2	9.1	9.0	8.6	8.0	6.8	5.1	CPF8M	
14.9	14.9	14.5	14.3	14.3	14.3	14.1	13.9	13.6	13.4	13.3	13.2	13.1	12.7	10.2	8.0	6.8	5.1	CPF8M	
13.9	12.7	12.1	11.7	11.2	10.6	10.4	10.1	9.9	9.7	9.4	9.3	9.2	8.4	7.2	5.5	4.3	3.2	CPH8	A 451
13.9	12.7	12.1	11.7	11.5	11.3	11.2	11.1	11.1	11.1	10.9	10.6	10.0	8.9	7.2	5.5	4.3	3.2	CPH8	
14.9	13.7	13.0	12.6	12.0	11.4	11.1	10.8	10.6	10.4	10.1	9.9	9.5	8.7	7.2	5.5	4.3	3.2	CPH10	
14.9	13.7	13.0	12.6	12.3	12.2	12.1	12.0	11.9	11.8	11.7	11.3	10.6	8.9	7.2	5.5	4.0	3.2	CPH10	
14.9	13.7	13.0	12.6	12.0	11.4	11.1	10.8	10.6	10.4	10.1	9.9	9.5	8.7	7.2	5.5	4.3	3.2	CPH20	A 451
14.9	13.7	13.0	12.6	12.3	12.2	12.1	12.0	11.9	11.8	11.7	11.3	10.6	8.9	7.2	5.5	4.0	3.2	CPH20	
13.9	12.7	12.1	11.7	11.2	10.6	10.4	10.1	9.9	9.7	9.4	9.3	9.0	8.8	8.3	7.2	6.2	5.1	CPK20	
13.9	12.7	12.1	11.7	11.5	11.3	11.2	11.1	11.1	11.1	10.9	10.6	10.1	9.4	8.3	7.2	6.2	5.1	CPK20	
16.0	13.3	12.0	11.0	10.3	9.7	9.5	9.4	9.2	9.0	8.8	8.7	8.5	8.3	8.1	7.6	6.5	5.2	TP304H	A 452
16.0	15.1	14.1	13.8	13.5	13.5	13.5	13.5	13.2	12.9	12.7	12.5	12.2	11.7	10.4	8.3	6.5	5.2	TP304H	
16.0	13.8	12.4	11.4	10.6	10.0	9.9	9.6	9.5	9.4	9.3	9.2	9.1	9.0	8.9	8.8	7.9	6.3	TP316H	
16.0	16.0	15.6	15.4	15.3	14.5	13.2	13.9	13.7	13.5	13.3	13.2	13.1	13.0	12.3	10.5	8.3	6.3	TP316H	
16.0	14.7	13.7	12.8	12.0	11.4	11.2	11.0	10.9	10.8	10.8	10.7	10.7	10.7	...	...	...	...	TP347H	
16.0	15.2	13.9	13.2	12.7	12.5	12.5	12.5	12.5	12.5	12.5	12.5	12.4	12.2	...	...	...	...	TP347H	
																		Welded Pipe and Tube – Without Filler Metal Austenitic	
16.0	13.3	12.0	11.0	10.5	9.7	9.5	9.4	9.2	9.0	8.8	8.7	8.5	8.3	8.1	7.6	6.5	5.2	TP304	A 249
16.0	15.1	14.1	13.8	13.5	13.5	13.5	13.5	13.2	12.9	12.7	12.5	12.2	11.7	10.4	8.3	6.5	5.2	TP304	
16.0	13.3	12.0	11.0	10.5	9.7	9.5	9.4	9.2	9.0	8.8	8.7	8.5	8.3	8.1	7.6	6.5	5.2	TP304H	
16.0	15.1	14.1	13.8	13.5	13.5	13.5	13.5	13.2	12.9	12.7	12.5	12.2	11.7	10.4	8.3	6.5	5.2	TP304H	
13.3	11.4	10.2	9.3	8.7	8.3	8.1	8.0	7.8	7.7	...	...	...	...	...	...	...	...	TP304L	A 249
13.3	13.3	13.0	12.5	12.3	11.9	11.7	11.5	11.3	11.1	...	...	...	...	...	...	...	...	TP304L	
17.0	15.2	13.3	12.0	11.1	10.5	10.4	10.1	10.0	9.8	9.6	9.4	9.2	9.0	8.8	8.3	6.5	5.1	TP304N	
17.0	17.0	16.2	15.6	15.1	14.8	14.7	14.6	14.4	14.2	13.9	13.5	13.3	12.8	10.5	8.3	6.5	5.1	TP304N	

Copyright ASME International
Provided by IHS under license with ASME
No reproduction or networking permitted without license from IHS
Not for Resale

Table A-3 Stainless Steels (Cont'd)

Spec. No.	Type or Grade	Class	UNS Alloy No.	Nominal Composition	P-No.	Notes	Specified Minimum Tensile, ksi	Specified Minimum Yield, ksi	*E* or *F*
Welded Pipe and Tube — Without Filler Metal (Cont'd)									
Austenitic (Cont'd)									
A 249	...	...	S30815	21Cr–11Ni–N	8	(1)	87	45	0.85
	...	...	S30815	21Cr–11Ni–N	8	(1)(9)	87	45	0.85
A 249	TP309H	...	S30909	23Cr–12Ni	8	(9)	75	30	0.85
	TP309H	...	S30909	23Cr–12Ni	8	...	75	30	0.85
A 249	TP316	...	S31600	16Cr–12Ni–2Mo	8	(10)	75	30	0.85
	TP316	...	S31600	16Cr–12Ni–2Mo	8	(9)(10)	75	30	0.85
	TP316H	...	S31609	16Cr–12Ni–2Mo	8	...	75	30	0.85
	TP316H	...	S31609	16Cr–12Ni–2Mo	8	(9)	75	30	0.85
A 249	TP316L	...	S31603	16Cr–12Ni–2Mo	8	(1)	70	25	0.85
	TP316L	...	S31603	16Cr–12Ni–2Mo	8	(1)(9)	70	25	0.85
	TP316N	...	S31651	16Cr–12Ni–2Mo–N	8	(10)	80	35	0.85
	TP316N	...	S31651	16Cr–12Ni–2Mo–N	8	(9)(10)	80	35	0.85
A 249	TP317	...	S31700	19Cr–13Ni–3Mo	8	(1)(10)	75	30	0.85
	TP317	...	S31700	19Cr–13Ni–3Mo	8	(1)(9)(10)	75	30	0.85
	TP321	...	S32100	18Cr–10Ni–Ti	8	(10)	75	30	0.85
	TP321	...	S32100	18Cr–10Ni–Ti	8	(9)(10)	75	30	0.85
	TP321H	...	S32109	18Cr–10Ni–Ti	8	...	75	30	0.85
	TP321H	...	S32109	18Cr–10Ni–Ti	8	(9)	75	30	0.85
A 249	TP347	...	S34700	18Cr–10Ni–Cb	8	(10)	75	30	0.85
	TP347	...	S34700	18Cr–10Ni–Cb	8	(9)(10)	75	30	0.85
	TP347H	...	S34709	18Cr–10Ni–Cb	8	...	75	30	0.85
	TP347H	...	S34709	18Cr–10Ni–Cb	8	(9)	75	30	0.85
A 249	TP348	...	S34800	18Cr–10Ni–Cb	8	(10)	75	30	0.85
	TP348	...	S34800	18Cr–10Ni–Cb	8	(9)(10)	75	30	0.85
	TP348H	...	S34809	18Cr–10Ni–Cb	8	...	75	30	0.85
	TP348H	...	S34809	18Cr–10Ni–Cb	8	(9)	75	30	0.85
A 249	...	...	S31254	20Cr–18Ni–6Mo	8	(1)(32)	94	44	0.85
	...	...	S31254	20Cr–18Ni–6Mo	8	(1)(9)(32)	94	44	0.85
A 312	TP304	...	S30400	18Cr–8Ni	8	(10)	75	30	0.85
	TP304	...	S30400	18Cr–8Ni	8	(9)(10)	75	30	0.85
	TP304H	...	S30409	18Cr–8Ni	8	...	75	30	0.85
	TP304H	...	S30409	18Cr–8Ni	8	(9)	75	30	0.85
A 312	TP304L	...	S30403	18Cr–8Ni	8	(1)	70	25	0.85
	TP304L	...	S30403	18Cr–8Ni	8	(1)(9)	70	25	0.85
	TP304N	...	S30451	18Cr–8Ni–N	8	(10)	80	35	0.85
	TP304N	...	S30451	18Cr–8Ni–N	8	(9)(10)	80	35	0.85
A 312	...	...	S30815	21Cr–11Ni–N	8	(1)	87	45	0.85
	...	...	S30815	21Cr–11Ni–N	8	(1)(9)	87	45	0.85

Copyright ASME International
Provided by IHS under license with ASME
No reproduction or networking permitted without license from IHS
Not for Resale

Table A-3 Stainless Steels (Cont'd)

Maximum Allowable Stress Values in Tension, ksi, for Metal Temperature, °F, Not Exceeding																		Type or Grade	Spec. No.
−20 to 100	200	300	400	500	600	650	700	750	800	850	900	950	1,000	1,050	1,100	1,150	1,200		
Welded Pipe and Tube – Without Filler Metal (Cont'd)																			
Austenitic (Cont'd)																			
21.2	21.0	18.7	16.9	15.7	15.0	14.8	14.6	14.5	14.3	14.1	13.9	13.8	12.7	9.9	7.7	5.9	4.4	...	A 249
21.2	21.0	19.8	19.0	18.5	18.2	18.0	17.9	17.7	17.5	17.3	17.0	16.2	12.7	9.9	7.7	5.9	4.4	...	...
16.0	16.0	15.9	15.6	15.2	14.9	14.7	14.5	14.3	14.1	13.7	13.3	12.8	11.7	8.8	6.5	4.7	3.4	TP309H	A 249
16.0	15.0	13.7	12.8	12.0	11.8	11.6	11.5	11.3	11.1	11.0	10.8	10.6	10.5	8.8	6.5	4.7	3.4	TP309H	
16.0	13.8	12.4	11.4	10.6	10.1	9.8	9.6	9.5	9.4	9.3	9.2	9.1	9.0	8.9	8.8	7.9	6.3	TP316	A 249
16.0	16.0	15.6	15.4	15.3	14.5	14.2	13.9	13.7	13.5	13.4	13.2	13.1	13.0	12.3	10.6	8.4	6.3	TP316	
16.0	13.8	12.4	11.4	10.6	10.1	9.8	9.6	9.5	9.4	9.3	9.2	9.1	9.0	8.9	8.8	7.9	6.3	TP316H	
16.0	16.0	15.6	15.4	15.3	14.5	14.2	13.9	13.7	13.5	13.4	13.2	13.1	13.0	12.3	10.6	8.4	6.3	TP316H	
13.3	11.3	10.1	9.2	8.5	8.0	7.8	7.6	7.5	7.3	7.2	...	...	...	...	...	...	...	TP316L	A 249
13.3	13.3	13.3	13.2	12.3	11.5	11.1	10.9	10.7	10.5	10.3	...	...	...	...	...	...	...	TP316L	
17.0	16.5	15.1	14.0	13.1	12.4	12.1	11.8	11.6	11.3	11.1	10.9	10.7	10.5	10.4	9.9	8.3	6.3	TP316N	
17.0	17.0	16.3	16.0	15.8	15.8	15.8	15.8	15.7	15.6	15.6	15.4	15.1	14.8	13.4	10.5	8.3	6.3	TP316N	
16.0	13.8	12.4	11.4	10.6	10.1	9.8	9.6	9.5	9.4	9.3	9.2	9.1	9.0	8.9	8.8	7.9	6.3	TP317	A 249
16.0	16.0	15.6	15.4	15.3	14.5	14.2	13.9	13.7	13.5	13.4	13.2	13.1	13.0	12.3	10.6	8.4	6.3	TP317	
16.0	13.5	12.1	11.0	10.2	9.7	9.5	9.3	9.2	9.2	9.1	9.0	9.0	8.9	7.8	5.9	4.3	3.1	TP321	
16.0	15.6	14.7	14.6	14.6	13.9	13.7	13.5	13.3	13.2	13.1	13.0	12.9	11.8	8.2	5.9	4.3	3.1	TP321	
16.0	13.5	12.1	11.0	10.2	9.7	9.5	9.3	9.2	9.2	9.1	9.0	9.0	8.9	8.6	7.5	5.9	4.6	TP321H	
16.0	15.6	14.7	14.6	14.6	13.9	13.7	13.5	13.3	13.2	13.1	13.0	12.9	11.9	10.0	7.7	5.9	4.6	TP321H	
16.0	14.7	13.7	12.8	12.0	11.4	11.2	11.0	10.9	10.8	10.8	10.7	10.7	10.6	10.1	7.8	5.2	3.8	TP347	A 249
16.0	15.2	14.0	13.2	12.7	12.5	12.5	12.5	12.5	12.5	12.5	12.5	12.4	11.9	10.3	7.8	5.2	3.8	TP347	
16.0	14.7	13.7	12.8	12.0	11.4	11.2	11.0	10.9	10.8	10.8	10.7	10.7	10.7	10.6	10.3	8.9	6.7	TP347H	
16.0	15.2	14.0	13.2	12.7	12.5	12.5	12.5	12.5	12.5	12.5	12.5	12.4	12.3	12.0	11.1	8.9	6.7	TP347H	
16.0	14.7	13.7	12.8	12.0	11.4	11.2	11.0	10.9	10.8	10.7	10.7	10.7	10.6	10.1	7.8	5.2	3.8	TP348	A 249
16.0	15.2	14.0	13.2	12.7	12.5	12.5	12.5	12.5	12.5	12.5	12.5	12.4	11.9	10.3	7.8	5.2	3.8	TP348	
16.0	14.7	13.7	12.8	12.0	11.4	11.2	11.0	10.9	10.8	10.8	10.7	10.7	10.7	10.6	10.3	8.9	6.7	TP348H	
16.0	15.2	14.0	13.2	12.7	12.5	12.5	12.5	12.5	12.5	12.5	12.5	12.4	12.3	12.0	11.1	8.9	6.7	TP348H	
20.0	20.0	18.2	16.9	15.7	15.2	15.0	14.9	14.7	...	...	...	...	...	...	...	...	...	S31254	A 249
20.0	20.0	19.0	18.1	17.4	17.1	16.9	16.9	16.8	...	...	...	...	...	...	...	...	...	S31254	
16.0	13.3	12.0	11.0	10.5	9.7	9.5	9.4	9.2	9.0	8.8	8.7	8.5	8.3	8.1	7.6	6.5	5.2	TP304	A312
16.0	15.1	14.1	13.8	13.5	13.5	13.5	13.5	13.2	12.9	12.7	12.5	12.2	11.7	10.4	8.3	6.5	5.2	TP304	
16.0	13.3	12.0	11.0	10.5	9.7	9.5	9.4	9.2	9.0	8.8	8.7	8.5	8.3	8.1	7.6	6.5	5.2	TP304H	
16.0	15.1	14.1	13.8	13.5	13.5	13.5	13.5	13.2	12.9	12.7	12.5	12.2	11.7	10.4	8.3	6.5	5.2	TP304H	
13.3	11.4	10.2	9.3	8.7	8.3	8.1	8.0	7.8	7.7	...	...	...	...	...	...	...	...	TP304L	A 312
13.3	13.3	13.0	12.5	12.3	11.9	11.7	11.5	11.3	11.1	...	...	...	...	...	...	...	...	TP304L	
17.0	15.2	13.3	12.0	11.1	10.5	10.4	10.1	10.0	9.8	9.6	9.4	9.2	9.0	8.8	8.3	6.5	5.1	TP304N	
17.0	17.0	16.2	15.6	15.1	14.8	14.7	14.6	14.4	14.2	13.9	13.5	13.3	12.8	10.5	8.3	6.5	5.1	TP304N	
21.2	21.0	18.7	16.9	15.7	15.0	14.8	14.6	14.5	14.3	14.1	13.9	13.8	12.7	9.9	7.7	5.9	4.4	...	A 312
21.2	21.0	19.8	19.0	18.5	18.2	18.0	17.9	17.7	17.5	17.3	17.0	16.2	12.7	9.9	7.7	5.9	4.4	...	...

Copyright ASME International
Provided by IHS under license with ASME
No reproduction or networking permitted without license from IHS
Not for Resale

Table A-3 Stainless Steels (Cont'd)

Spec. No.	Type or Grade	Class	UNS Alloy No.	Nominal Composition	P-No.	Notes	Specified Minimum Tensile, ksi	Specified Minimum Yield, ksi	*E* or *F*
Welded Pipe and Tube — Without Filler Metal (Cont'd)									
Austenitic (Cont'd)									
A 312	TP309H	...	S30909	23Cr–12Ni	8	(9)	75	30	0.85
	TP309H	...	S30909	23Cr–12Ni	8	...	75	30	0.85
	TP310H	...	S31009	23Cr–20Ni	8	(9)	75	30	0.85
	TP310H	...	S31009	23Cr–20Ni	8	...	75	30	0.85
A 312	TP316	...	S31600	16Cr–12Ni–2Mo	8	(10)	75	30	0.85
	TP316	...	S31600	16Cr–12Ni–2Mo	8	(9)(10)	75	30	0.85
	TP316H	...	S31609	16Cr–12Ni–2Mo	8	...	75	30	0.85
	TP316H	...	S31609	16Cr–12Ni–2Mo	8	(9)	75	30	0.85
A 312	TP316L	...	S31603	16Cr–12Ni–2Mo	8	(1)	70	25	0.85
	TP316L	...	S31603	16Cr–12Ni–2Mo	8	(1)(9)	70	25	0.85
	TP316N	...	S31651	16Cr–12Ni–2Mo–N	8	(10)	80	35	0.85
	TP316N	...	S31651	16Cr–12Ni–2Mo–N	8	(9)(10)	80	35	0.85
A 312	TP317	...	S31700	19Cr–13Ni–3Mo	8	(1)(10)	75	30	0.85
	TP317	...	S31700	19Cr–13Ni–3Mo	8	(1)(9)(10)	75	30	0.85
	TP321	...	S32100	18Cr–10Ni–Ti	8	(10)	75	30	0.85
	TP321	...	S32100	18Cr–10Ni–Ti	8	(9)(10)	75	30	0.85
	TP321H	...	S32109	18Cr–10Ni–Ti	8	...	75	30	0.85
	TP321H	...	S32109	18Cr–10Ni–Ti	8	(9)	75	30	0.85
A 312	TP347	...	S34700	18Cr–10Ni–Cb	8	(10)	75	30	0.85
	TP347	...	S34700	18Cr–10Ni–Cb	8	(9)(10)	75	30	0.85
	TP347H	...	S34709	18Cr–10Ni–Cb	8	...	75	30	0.85
	TP347H	...	S34709	18Cr–10Ni–Cb	8	(9)	75	30	0.85
A 312	TP348	...	S34800	18Cr–10Ni–Cb	8	(1)(10)	75	30	0.85
	TP348	...	S34800	18Cr–10Ni–Cb	8	(1)(9)(10)	75	30	0.85
	TP348H	...	S34809	18Cr–10Ni–Cb	8	(1)	75	30	0.85
	TP348H	...	S34809	18Cr–10Ni–Cb	8	(1)(9)	75	30	0.85
A 312	TPXM15	...	S38100	18Cr–18Ni–2Si	8	(1)	75	30	0.85
	TPXM15	...	S38100	18Cr–18Ni–2Si	8	(1)(9)	75	30	0.85
	...	...	S31254	20Cr–18Ni–6Mo	8	(1)(32)	94	44	0.85
	...	...	S31254	20Cr–18Ni–6Mo	8	(1)(9)(32)	94	44	0.85
A 409	...	...	S30815	21Cr–11Ni–N	8	(1)	87	45	0.85
	...	...	S30815	21Cr–11Ni–N	8	(1)(9)	87	45	0.85
Ferritic/Martensitic									
A 268	TP405	...	S40500	12Cr–Al	7	...	60	30	0.85
	TP410	...	S41000	13Cr	6	...	60	30	0.85
	TP429	...	S42900	15Cr	6	...	60	35	0.85
	TP430	...	S43000	17Cr	7	...	60	35	0.85
	TP446-1	...	S44600	27Cr	10I	(1)(32)	70	40	0.85
	TPXM27	...	S44627	26Cr–1Mo	10I	(1)(2)(32)	65	40	0.85
	TPXM33	...	S44626	27Cr–1Mo–Ti	10I	(2)(32)	68	45	0.85

Copyright ASME International
Provided by IHS under license with ASME
No reproduction or networking permitted without license from IHS Not for Resale

Table A-3 Stainless Steels (Cont'd)

Maximum Allowable Stress Values in Tension, ksi, for Metal Temperature, °F, Not Exceeding																		Type or Grade	Spec. No.
−20 to 100	200	300	400	500	600	650	700	750	800	850	900	950	1,000	1,050	1,100	1,150	1,200		
Welded Pipe and Tube – Without Filler Metal (Cont'd)																			
Austenitic (Cont'd)																			
16.0	16.0	15.9	15.6	15.2	14.9	14.7	14.5	14.3	14.0	13.7	13.3	12.8	9.7	8.8	6.5	4.7	3.4	TP309H	A 312
16.0	15.0	13.7	12.8	12.0	11.8	11.6	11.5	11.3	11.1	11.0	10.8	10.6	10.5	8.8	6.5	4.7	3.4	TP309H	
16.0	15.6	15.0	14.8	14.8	14.8	14.8	14.8	14.6	14.5	14.2	13.9	13.5	11.7	8.8	6.5	4.7	3.4	TP310H	
16.0	15.0	13.7	12.8	12.2	11.6	11.5	11.3	11.1	11.0	10.8	10.6	10.5	10.3	8.8	6.5	4.7	3.4	TP310H	
16.0	13.8	12.4	11.4	10.6	10.1	9.8	9.6	9.5	9.4	9.3	9.2	9.1	9.0	8.9	8.8	7.9	6.3	TP316	A 312
16.0	16.0	15.6	15.4	15.3	14.5	14.2	13.9	13.7	13.5	13.4	13.2	13.1	13.0	12.3	10.6	8.4	6.3	TP316	
16.0	13.8	12.4	11.4	10.6	10.1	9.8	9.6	9.5	9.4	9.3	9.2	9.1	9.0	8.9	8.8	7.9	6.3	TP316H	
16.0	16.0	15.6	15.4	15.3	14.5	14.2	13.9	13.7	13.5	13.4	13.2	13.1	13.0	12.3	10.6	8.4	6.3	TP316H	
13.3	11.3	10.1	9.2	8.5	8.0	7.8	7.6	7.5	7.3	7.2	...	...	...	...	...	...	...	TP316L	A 312
13.3	13.3	13.3	13.2	12.3	11.5	11.2	10.9	10.7	10.5	10.3	...	...	...	...	...	...	...	TP316L	
17.0	16.5	15.1	14.0	13.1	12.4	12.1	11.8	11.6	11.3	11.1	10.9	10.7	10.5	10.4	9.9	8.3	6.3	TP316N	
17.0	17.0	16.3	16.0	15.8	15.8	15.8	15.8	15.7	15.6	15.6	15.4	15.1	14.8	13.4	10.5	8.3	6.3	TP316N	
16.0	13.8	12.4	11.4	10.6	10.1	9.8	9.6	9.5	9.4	9.3	9.2	9.1	9.0	8.9	8.8	7.9	6.3	TP317	A 312
16.0	16.0	15.6	15.4	15.3	14.5	14.2	13.9	13.7	13.5	13.4	13.2	13.1	13.0	12.3	10.6	8.4	6.3	TP317	
16.0	13.5	12.1	11.0	10.2	9.7	9.5	9.3	9.2	9.2	9.1	9.0	9.0	8.8	7.8	5.9	4.3	3.1	TP321	
16.0	15.6	14.7	14.6	14.6	13.9	13.7	13.5	13.3	13.2	13.1	13.0	12.9	11.8	8.2	5.9	4.3	3.1	TP321	
16.0	13.5	12.1	11.0	10.2	9.7	9.5	9.3	9.2	9.2	9.1	9.0	9.0	8.9	8.6	7.5	5.9	4.6	TP321H	
16.0	15.6	14.7	14.6	14.6	13.9	13.7	13.5	13.3	13.2	13.1	13.0	12.9	11.9	10.0	7.7	5.9	4.6	TP321H	
16.0	14.7	13.7	12.8	12.0	11.4	11.2	11.0	10.9	10.8	10.8	10.7	10.7	10.6	10.1	7.8	5.2	3.8	TP347	A 312
16.0	15.2	14.0	13.2	12.7	12.5	12.5	12.5	12.5	12.5	12.5	12.5	12.4	11.9	10.3	7.8	5.2	3.8	TP347	
16.0	14.7	13.7	12.8	12.0	11.4	11.2	11.0	10.9	10.8	10.8	10.7	10.7	10.7	10.6	10.3	8.9	6.7	TP347H	
16.0	15.2	14.0	13.2	12.7	12.5	12.5	12.5	12.5	12.5	12.5	12.5	12.4	12.3	12.0	11.1	8.9	6.7	TP347H	
16.0	14.7	13.7	12.8	12.0	11.4	11.2	11.0	10.9	10.8	10.8	10.7	10.7	10.6	10.1	7.8	5.2	3.8	TP348	A 312
16.0	15.2	14.0	13.2	12.7	12.5	12.5	12.5	12.5	12.5	12.5	12.5	12.4	11.9	10.3	7.8	5.2	3.8	TP348	
16.0	14.7	13.7	12.8	12.0	11.4	11.2	11.0	10.9	10.8	10.8	10.7	10.7	10.7	10.6	10.3	8.9	6.7	TP348H	
16.0	15.2	14.0	13.2	12.7	12.5	12.5	12.5	12.5	12.5	12.5	12.5	12.4	12.3	12.0	11.1	8.9	6.7	TP348H	
15.9	13.3	11.9	11.0	10.3	9.7	9.5	9.4	9.2	8.9	8.8	8.6	8.4	8.3	...	...	...	...	TPXM15	A 312
15.9	15.1	14.1	13.7	13.5	13.5	13.5	13.5	13.2	12.8	12.7	12.4	12.2	11.6	...	...	...	...	TPXM15	
20.0	20.0	18.2	16.9	15.7	15.2	15.0	14.9	14.7	...	...	...	...	...	...	...	...	...	...	
20.0	20.0	19.0	18.1	17.4	17.1	16.9	16.9	16.8	...	...	...	...	...	...	...	...	...	...	
21.2	21.0	18.7	16.9	15.7	15.0	14.8	14.6	14.5	14.3	14.1	13.9	13.8	12.7	9.9	7.7	5.9	4.4	...	A 409
21.2	21.0	19.8	19.0	18.5	18.2	18.0	17.9	17.7	17.5	17.3	17.0	16.2	12.7	9.9	7.7	5.9	4.4	...	
Ferritic/Martensitic																			
12.8	12.2	11.8	11.3	10.9	10.6	10.4	10.3	...	...	...	...	...	...	...	...	...	...	TP405	A 268
12.8	12.2	11.8	11.3	10.9	10.6	10.4	10.3	...	...	...	...	...	...	...	...	...	...	TP410	
12.8	12.2	11.8	11.3	10.9	10.6	10.4	10.3	...	...	...	...	...	...	...	...	...	...	TP429	
12.8	12.2	11.8	11.3	10.9	10.6	10.4	10.3	...	...	...	...	...	...	...	...	...	...	TP430	
14.9	14.2	13.7	13.3	12.8	12.3	12.2	12.0	...	...	...	...	...	...	...	...	...	...	TP446-1	
13.8	13.8	13.5	13.5	13.5	13.5	13.5	...	...	...	...	...	...	...	...	...	...	...	TPXM27	
14.5	14.5	14.3	14.1	13.9	13.7	13.5	...	...	...	...	...	...	...	...	...	...	...	TPXM33	

--`,,```,,,,````-`-`,,`,,`,`,,`---

Copyright ASME International
Provided by IHS under license with ASME
No reproduction or networking permitted without license from IHS

Not for Resale

Table A-3 Stainless Steels (Cont'd)

Spec. No.	Type or Grade	Class	UNS Alloy No.	Nominal Composition	P-No.	Notes	Specified Minimum Tensile, ksi	Specified Minimum Yield, ksi	*E* or *F*
Welded Pipe and Tube — Without Filler Metal (Cont'd)									
Ferritic/Martensitic (Cont'd)									
A 731	TPXM27	. . .	S44627	27Cr–1Mo	10I	(2)(32)	65	40	0.85
	TPXM33	. . .	S44626	27Cr–1Mo–Ti	10I	(2)(32)	65	40	0.85
Welded Pipe — Filler Metal Added									
Austenitic									
A 358	304	1 & 3	S30400	18Cr–8Ni	8	(1)(10)(11)	75	30	1.00
	304	2	S30400	18Cr–8Ni	8	(1)(10)(11)	75	30	0.90
	304	1 & 3	S30400	18Cr–8Ni	8	(1)(9)(10)(11)	75	30	1.00
	304	2	S30400	18Cr–8Ni	8	(1)(9)(10)(11)	75	30	0.90
A 358	304L	1 & 3	S30403	18Cr–8Ni	8	(1)	70	25	1.00
	304L	2	S30403	18Cr–8Ni	8	(1)	70	25	0.90
	304L	1 & 3	S30403	18Cr–8Ni	8	(1)(9)	70	25	1.00
	304L	2	S30403	18Cr–8Ni	8	(1)(9)	70	25	0.90
A 358	304N	1 & 3	S30451	18Cr–8Ni–N	8	(1)(10)	80	35	1.00
	304N	2	S30451	18Cr–8Ni–N	8	(1)(10)	80	35	0.90
	304N	1 & 3	S30451	18Cr–8Ni–N	8	(1)(9)(10)	80	35	1.00
	304N	2	S30451	18Cr–8Ni–N	8	(1)(9)(10)	80	35	0.90
A 358	. . .	1 & 3	S30815	21Cr–11Ni–N	8	(1)	87	45	1.00
	. . .	2	S30815	21Cr–11Ni–N	8	(1)	87	45	0.90
	. . .	1 & 3	S30815	21Cr–11Ni–N	8	(1)(9)	87	45	1.00
	. . .	2	S30815	21Cr–11Ni–N	8	(1)(9)	87	45	0.90
A 358	309	1 & 3	S30900	23Cr–12Ni	8	(1)(10)	75	30	1.00
	309	2	S30900	23Cr–12Ni	8	(1)(10)	75	30	0.90
	309	1 & 3	S30900	23Cr–12Ni	8	(1)(9)(10)	75	30	1.00
	309	2	S30900	23Cr–12Ni	8	(1)(9)(10)	75	30	0.90
A 358	310	1 & 3	S31000	25Cr–20Ni	8	(1)(10)(14)	75	30	1.00
	310	2	S31000	25Cr–20Ni	8	(1)(10)(14)	75	30	0.90
	310	1 & 3	S31000	25Cr–20Ni	8	(1)(9)(10)(14)	75	30	1.00
	310	2	S31000	25Cr–20Ni	8	(1)(9)(10)(14)	75	30	0.90
A 358	310	1 & 3	S31000	25Cr–20Ni	8	(1)(10)(15)	75	30	1.00
	310	2	S31000	25Cr–20Ni	8	(1)(10)(15)	75	30	0.90
	310	1 & 3	S31000	25Cr–20Ni	8	(1)(9)(10)(15)	75	30	1.00
	310	2	S31000	25Cr–20Ni	8	(1)(9)(10)(15)	75	30	0.90
A358	316	1 & 3	S31600	16Cr–12Ni–2Mo	8	(1)(10)(11)	75	30	1.00
	316	2	S31600	16Cr–12Ni–2Mo	8	(1)(10)(11)	75	30	0.90
	316	1 & 3	S31600	16Cr–12Ni–2Mo	8	(1)(9)(10)(11)	75	30	1.00
	316	2	S31600	16Cr–12Ni–2Mo	8	(1)(9)(10)(11)	75	30	0.90

Copyright ASME International
Provided by IHS under license with ASME
No reproduction or networking permitted without license from IHS
Not for Resale

Table A-3 Stainless Steels (Cont'd)

Maximum Allowable Stress Values in Tension, ksi, for Metal Temperature, °F, Not Exceeding																		Type or Grade	Spec. No.
−20 to 100	200	300	400	500	600	650	700	750	800	850	900	950	1,000	1,050	1,100	1,150	1,200		
Welded Pipe and Tube – Without Filler Metal (Cont'd)																			
Ferritic/Martensitic (Cont'd)																			
13.8	13.8	13.5	13.5	13.5	13.5	13.5	...	...	...	...	...	...	...	...	...	...	...	TPXM27	A 731
13.9	13.9	13.7	13.5	13.3	13.1	12.9	...	...	...	...	...	...	...	...	...	...	...	TPXM33	
Welded Pipe – Filler Metal Added																			
Austenitic																			
18.8	15.7	14.1	13.0	12.2	11.4	11.3	11.1	10.8	10.6	10.4	10.2	10.0	9.8	9.5	8.9	7.7	6.1	304	A358
16.9	14.1	12.7	11.7	11.0	10.3	10.2	10.0	9.7	9.5	9.4	9.2	9.0	8.8	8.6	8.0	6.9	5.5	304	
18.8	17.8	16.6	16.2	15.9	15.9	15.9	15.9	15.6	15.2	14.9	14.7	14.4	13.8	12.2	9.8	7.7	6.1	304	
16.9	16.0	14.9	14.6	14.3	14.3	14.3	14.3	14.0	13.7	13.4	13.2	13.0	12.4	11.0	8.8	6.9	5.5	304	
15.7	13.4	12.0	11.0	10.3	9.7	9.5	9.4	9.2	9.1	...	...	...	...	...	...	...	...	304L	A 358
14.1	12.1	10.8	9.9	9.3	8.7	8.6	8.5	8.3	8.2	...	...	...	...	...	...	...	...	304L	
15.7	15.7	15.3	14.7	14.4	14.0	13.7	13.5	13.3	13.0	...	...	...	...	...	...	...	...	304L	
14.1	14.1	13.8	13.2	13.0	12.6	12.3	12.2	12.0	11.7	...	...	...	...	...	...	...	...	304L	
20.0	17.9	15.7	14.1	13.0	12.4	12.2	11.9	11.7	11.5	11.3	11.1	10.8	10.5	10.3	9.7	7.7	6.0	304N	A 358
18.0	16.1	14.1	12.7	11.7	11.2	11.0	10.7	10.5	10.4	10.2	10.0	9.7	9.5	9.3	8.7	6.9	5.4	304N	
20.0	20.0	19.0	18.3	17.8	17.4	17.3	17.1	16.9	16.6	16.3	15.9	15.6	15.0	12.4	9.7	7.7	6.0	304N	
18.0	18.0	17.1	16.5	16.0	15.7	15.6	15.4	15.2	14.9	14.7	14.3	14.0	13.5	11.2	8.7	6.9	5.4	304N	
24.9	24.7	22.0	19.9	18.5	17.7	17.4	17.2	17.0	16.8	16.6	16.4	16.2	14.9	11.6	9.0	6.9	5.2	...	A 358
22.4	22.2	21.0	20.2	19.6	19.3	19.1	18.9	18.7	18.5	18.3	18.0	17.2	13.4	10.4	8.1	6.2	4.7	...	
24.9	24.7	22.0	19.9	18.5	17.7	17.4	17.2	17.0	16.8	16.6	16.4	16.2	14.9	11.6	9.0	6.9	5.2	...	
22.4	22.2	21.0	20.2	19.6	19.3	19.1	18.9	18.7	18.5	18.3	18.0	17.2	13.4	10.4	8.1	6.2	4.7	...	
18.8	16.9	15.9	14.9	14.1	13.4	13.1	12.7	12.5	12.2	11.9	11.7	11.2	10.2	8.5	6.5	5.0	3.8	309	A 358
16.9	15.2	14.3	13.4	12.7	12.1	11.8	11.4	11.3	11.0	10.7	10.5	10.1	9.2	7.7	5.9	4.5	3.4	309	
18.8	17.2	16.4	15.9	15.5	15.3	15.2	15.1	15.0	14.9	14.6	13.9	12.5	10.5	8.5	6.5	5.0	3.8	309	
16.9	15.5	14.8	14.3	14.0	13.8	13.7	13.6	13.5	13.4	13.1	12.5	11.3	9.5	7.7	5.9	4.5	3.4	309	
18.8	16.9	15.9	14.9	14.1	13.4	13.1	12.7	12.5	12.2	11.9	11.7	11.4	10.8	9.8	8.5	7.3	6.0	310	A 358
16.9	15.2	14.3	13.4	12.7	12.1	11.8	11.4	11.3	11.0	10.7	10.5	10.3	9.7	8.8	7.7	6.6	5.4	310	
18.8	17.2	16.4	15.9	15.5	15.3	15.2	15.1	15.0	14.9	14.6	13.9	12.5	11.0	9.8	8.5	7.3	6.0	310	
16.9	15.5	14.8	14.3	14.0	13.8	13.7	13.6	13.5	13.4	13.1	12.5	11.3	9.9	8.8	7.7	6.6	5.4	310	
18.8	16.9	15.9	14.9	14.1	13.4	13.1	12.7	12.5	12.2	11.9	11.7	11.1	9.9	7.1	5.0	3.6	2.5	310	A 358
16.9	15.2	14.3	13.4	12.7	12.1	11.8	11.4	11.3	11.0	10.7	10.5	10.0	8.9	6.4	4.5	3.2	2.3	310	
18.8	17.2	16.4	15.9	15.5	15.3	15.2	15.1	15.0	14.9	14.6	13.9	12.5	11.0	7.1	5.0	3.6	2.5	310	
16.9	15.5	14.8	14.3	14.0	13.8	13.7	13.6	13.5	13.4	13.1	12.5	11.3	9.9	6.4	4.5	3.2	2.3	310	
18.8	16.2	14.6	13.4	12.5	11.8	11.6	11.3	11.2	11.0	10.9	10.8	10.7	10.6	10.5	10.3	9.3	7.4	316	A 358
16.9	14.6	13.1	12.1	11.3	10.6	10.4	10.2	10.1	9.9	9.8	9.7	9.6	9.5	9.5	9.3	8.4	6.7	316	
18.8	18.8	18.4	18.1	18.0	17.0	16.7	16.3	16.1	15.9	15.7	15.6	15.4	15.3	14.5	12.4	9.8	7.4	316	
16.9	16.9	16.6	16.3	16.2	15.3	15.0	14.7	14.5	14.3	14.1	14.0	13.9	13.8	13.1	11.2	8.8	6.7	316	

Copyright ASME International
Provided by IHS under license with ASME
No reproduction or networking permitted without license from IHS
Not for Resale

Table A-3 Stainless Steels (Cont'd)

Spec. No.	Type or Grade	Class	UNS Alloy No.	Nominal Composition	P-No.	Notes	Specified Minimum Tensile, ksi	Specified Minimum Yield, ksi	*E* or *F*
Welded Pipe — Filler Metal Added (Cont'd)									
Austenitic (Cont'd)									
A 358	316L	1 & 3	S31603	16Cr–12Ni–2Mo	8	(1)	70	25	1.00
	316L	2	S31603	16Cr–12Ni–2Mo	8	(1)	70	25	0.90
	316L	1 & 3	S31603	16Cr–12Ni–2Mo	8	(1)(9)	70	25	1.00
	316L	2	S31603	16Cr–12Ni–2Mo	8	(1)(9)	70	25	0.90
A 358	316N	1 & 3	S31651	16Cr–12Ni–2Mo–N	8	(1)(10)	80	35	1.00
	316N	2	S31651	16Cr–12Ni–2Mo–N	8	(1)(10)	80	35	0.90
	316N	1 & 3	S31651	16Cr–12Ni–2Mo–N	8	(1)(9)(10)	80	35	1.00
	316N	2	S31651	16Cr–12Ni–2Mo–N	8	(1)(9)(10)	80	35	0.90
A 358	321	1 & 3	S32100	18Cr–10Ni–Ti	8	(1)(10)(11)	75	30	1.00
	321	2	S32100	18Cr–10Ni–Ti	8	(1)(10)(11)	75	30	0.90
	321	1 & 3	S32100	18Cr–10Ni–Ti	8	(1)(9)(10)(11)	75	30	1.00
	321	2	S32100	18Cr–10Ni–Ti	8	(1)(9)(10)(11)	75	30	0.90
A 358	347	1 & 3	S34700	18Cr–10Ni–Cb	8	(1)(10)(11)	75	30	1.00
	347	2	S34700	18Cr–10Ni–Cb	8	(1)(10)(11)	75	30	0.90
	347	1 & 3	S34700	18Cr–10Ni–Cb	8	(1)(9)(10)(11)	75	30	1.00
	347	2	S34700	18Cr–10Ni–Cb	8	(1)(9)(10)(11)	75	30	0.90
A 358	348	1 & 3	S34800	18Cr–10Ni–Cb	8	(1)(10)(11)	75	30	1.00
	348	2	S34800	18Cr–10Ni–Cb	8	(1)(10)(11)	75	30	0.90
	348	1 & 3	S34800	18Cr–10Ni–Cb	8	(1)(9)(10)(11)	75	30	1.00
	348	2	S34800	18Cr–10Ni–Cb	8	(1)(9)(10)(11)	75	30	0.90
A 358	...	1 & 3	S31254	20Cr–18Ni–6Mo	8	(1)(32)	94	44	1.00
	...	2	S31254	20Cr–18Ni–6Mo	8	(1)(32)	94	44	0.90
	...	1 & 3	S31254	20Cr–18Ni–6Mo	8	(1)(9)(32)	94	44	1.00
	...	2	S31254	20Cr–18Ni–6Mo	8	(1)(9)(32)	94	44	0.90
A 409	TP304	...	S30400	18Cr–8Ni	8	(1)(10)(29)	75	30	1.00
	TP304	...	S30400	18Cr–8Ni	8	(1)(10)(30)	75	30	0.90
	TP304	...	S30400	18Cr–8Ni	8	(1)(10)(31)	75	30	0.80
	TP304	...	S30400	18Cr–8Ni	8	(1)(9)(10)(29)	75	30	1.00
	TP304	...	S30400	18Cr–8Ni	8	(1)(9)(10)(30)	75	30	0.90
	TP304	...	S30400	18Cr–8Ni	8	(1)(9)(10)(31)	75	30	0.80
A 409	TP304L	...	S30403	18Cr–8Ni	8	(1)(29)	70	25	1.00
	TP304L	...	S30403	18Cr–8Ni	8	(1)(30)	70	25	0.90
	TP304L	...	S30403	18Cr–8Ni	8	(1)(31)	70	25	0.80
	TP304L	...	S30403	18Cr–8Ni	8	(1)(9)(29)	70	25	1.00
	TP304L	...	S30403	18Cr–8Ni	8	(1)(9)(30)	70	25	0.90
	TP304L	...	S30400	18Cr–8Ni	8	(1)(9)(31)	70	25	0.80
A 409	...	...	S30815	21Cr–11Ni–N	8	(1)	87	45	0.85
	...	...	S30815	21Cr–11Ni–N	8	(1)(9)	87	45	0.85

--`,,```,,,,````-`-`,,`,,`,`,,`---
Copyright ASME International
Provided by IHS under license with ASME
No reproduction or networking permitted without license from IHS
Not for Resale

Table A-3 Stainless Steels (Cont'd)

Maximum Allowable Stress Values in Tension, ksi, for Metal Temperature, °F, Not Exceeding																		Type or Grade	Spec. No.
−20 to 100	200	300	400	500	600	650	700	750	800	850	900	950	1,000	1,050	1,100	1,150	1,200		
Welded Pipe and Tube – Filler Metal Added (Cont'd)																			
Austenitic (Cont'd)																			
15.7	13.3	11.9	10.8	10.0	9.4	9.2	9.0	8.8	8.6	8.4	...	...	...	...	...	...	...	316L	A 358
14.1	12.0	10.7	9.7	9.0	8.5	8.3	8.1	7.9	7.7	7.6	...	...	...	...	...	...	...	316L	
15.7	15.7	15.7	15.5	14.4	13.5	13.2	12.9	12.6	12.4	12.1	...	...	...	...	...	...	...	316L	
14.1	14.1	14.1	14.0	13.0	12.2	11.9	11.6	11.3	11.2	10.9	...	...	...	...	...	...	...	316L	
20.0	19.4	17.8	16.5	15.4	14.6	14.2	13.9	13.6	13.3	13.1	12.8	12.6	12.4	12.2	11.7	9.8	7.4	316N	A 358
18.0	17.5	16.0	14.9	13.9	13.1	12.8	12.5	12.2	12.0	11.8	11.5	11.3	11.2	11.0	10.5	8.8	6.7	316N	
20.0	20.0	19.2	18.8	18.6	18.6	18.6	18.6	18.5	18.4	18.3	18.1	17.8	17.4	15.8	12.4	9.8	7.4	316N	
18.0	18.0	17.3	16.9	16.7	16.7	16.7	16.7	16.7	16.6	16.5	16.3	16.0	15.7	14.2	11.2	8.8	6.7	316N	
18.8	15.9	14.2	12.9	12.0	11.4	11.2	11.0	10.9	10.8	10.7	10.6	10.6	10.4	9.2	6.9	5.0	3.6	321	A 358
16.9	14.3	12.8	11.6	10.8	10.3	10.1	9.9	9.8	9.7	9.6	9.5	9.5	9.4	8.3	6.2	4.5	3.2	321	
18.8	18.4	17.3	17.1	17.1	16.4	16.1	15.8	15.7	15.5	15.4	15.3	15.2	13.8	9.6	6.9	5.0	3.6	321	
16.9	16.6	15.6	15.4	15.4	14.8	14.5	14.2	14.1	14.0	13.9	13.8	13.7	12.4	8.6	6.2	4.5	3.2	321	
18.8	17.3	16.1	15.0	14.1	13.4	13.2	12.9	12.8	12.7	12.7	12.6	12.6	12.5	11.9	9.1	6.1	4.4	347	A 358
16.9	15.6	14.5	13.5	12.7	12.1	11.9	11.6	11.5	11.4	11.4	11.3	11.3	11.3	10.7	8.2	5.5	4.0	347	
18.8	17.9	16.4	15.5	14.9	14.7	14.7	14.7	14.7	14.7	14.7	14.7	14.6	14.0	12.1	9.1	6.1	4.4	347	
16.9	16.1	14.8	14.0	13.4	13.2	13.2	13.2	13.2	13.2	13.2	13.2	13.1	12.6	10.9	8.2	5.5	4.0	347	
18.8	17.3	16.1	15.0	14.1	13.4	13.2	12.9	12.8	12.7	12.7	12.6	12.6	12.5	11.9	9.1	6.1	4.4	348	A 358
16.9	15.6	14.5	13.5	12.7	12.1	11.9	11.6	11.5	11.4	11.4	11.3	11.3	11.3	10.7	8.2	5.5	4.0	348	
18.8	17.9	16.4	15.5	14.9	14.7	14.7	14.7	14.7	14.7	14.7	14.7	14.6	14.0	12.1	9.1	6.1	4.4	348	
16.9	16.1	14.8	14.0	13.4	13.2	13.2	13.2	13.2	13.2	13.2	13.2	13.1	12.6	10.9	8.2	5.5	4.0	348	
23.5	23.5	21.4	19.9	18.5	17.9	17.7	17.5	17.3	...	...	...	...	...	...	...	...	...	...	A 358
18.0	18.0	16.4	15.2	14.1	13.7	13.5	13.4	13.2	...	...	...	...	...	...	...	...	...	...	
23.5	23.5	22.4	21.3	20.5	20.1	19.9	19.9	19.8	...	...	...	...	...	...	...	...	...	...	
18.0	18.0	17.1	16.3	15.7	15.4	15.2	15.2	15.1	...	...	...	...	...	...	...	...	...	...	
18.8	16.7	15.0	13.8	12.9	12.1	12.0	11.8	11.5	11.2	11.0	10.9	10.6	10.4	10.1	9.8	7.7	6.1	TP304	A 409
16.9	15.0	13.5	12.4	11.6	10.9	10.8	10.6	10.4	10.1	9.9	9.8	9.5	9.4	9.1	8.8	6.9	5.5	TP304	
15.0	13.4	12.0	11.0	10.3	9.7	9.6	9.4	9.2	9.0	8.8	8.7	8.5	8.3	8.1	7.8	6.2	4.9	TP304	
18.8	17.8	16.6	16.2	15.9	15.9	15.9	15.9	15.6	15.2	14.9	14.7	14.4	14.1	12.4	9.8	7.7	6.1	TP304	
16.9	16.0	14.9	14.6	14.3	14.3	14.3	14.3	14.0	13.7	13.4	13.2	13.0	12.7	11.2	8.8	6.9	5.5	TP304	
15.0	14.2	13.3	13.0	12.7	12.7	12.7	12.7	12.5	12.2	11.9	11.8	11.5	11.3	9.9	7.8	6.2	4.9	TP304	
16.7	14.3	12.8	11.7	10.9	10.3	10.1	10.0	9.8	9.7	...	...	...	...	...	...	...	...	TP304L	A 409
15.0	12.9	11.5	10.5	9.8	9.3	9.1	9.0	8.8	8.7	...	...	...	...	...	...	...	...	TP304L	
13.4	11.4	10.2	9.4	8.7	8.2	8.1	8.0	7.8	7.8	...	...	...	...	...	...	...	...	TP304L	
16.7	16.5	15.3	14.7	14.4	14.0	13.7	13.5	13.3	13.0	...	...	...	...	...	...	...	...	TP304L	
15.0	14.9	13.8	13.2	13.0	12.6	12.3	12.2	12.0	11.7	...	...	...	...	...	...	...	...	TP304L	
13.4	13.2	12.2	11.8	11.5	11.2	11.0	10.8	10.6	10.4	...	...	...	...	...	...	...	...	TP304L	
19.9	19.8	17.6	15.9	14.8	14.2	13.9	13.8	13.6	13.4	13.3	13.1	13.0	11.9	9.3	7.2	5.5	4.2	...	A 409
19.9	19.8	18.6	17.9	17.4	17.1	17.0	16.8	16.6	16.5	16.2	16.0	15.3	11.9	9.3	7.2	5.5	4.2	...	

Copyright ASME International
Provided by IHS under license with ASME
No reproduction or networking permitted without license from IHS
Not for Resale

Table A-3 Stainless Steels (Cont'd)

Spec. No.	Type or Grade	Class	UNS Alloy No.	Nominal Composition	P-No.	Notes	Specified Minimum Tensile, ksi	Specified Minimum Yield, ksi	*E* or *F*
Welded Pipe — Filler Metal Added (Cont'd)									
Austenitic (Cont'd)									
A 409	TP316	...	S31600	16Cr–12Ni–2Mo	8	(1)(10)(29)	75	30	1.00
	TP316	...	S31600	16Cr–12Ni–2Mo	8	(1)(10)(30)	75	30	0.90
	TP316	...	S31600	16Cr–12Ni–2Mo	8	(1)(10)(31)	75	30	0.80
	TP316	...	S31600	16Cr–12Ni–2Mo	8	(1)(9)(10)(29)	75	30	1.00
	TP316	...	S31600	16Cr–12Ni–2Mo	8	(1)(9)(10)(30)	75	30	0.90
	TP316	...	S31600	16Cr–12Ni–2Mo	8	(1)(9)(10)(31)	75	30	0.80
A 409	TP316L	...	S31603	16Cr–12Ni–2Mo	8	(1)(29)	70	25	1.00
	TP316L	...	S31603	16Cr–12Ni–2Mo	8	(1)(30)	70	25	0.90
	TP316L	...	S31603	16Cr–12Ni–2Mo	8	(1)(31)	70	25	0.80
	TP316L	...	S31603	16Cr–12Ni–2Mo	8	(1)(9)(29)	70	25	1.00
	TP316L	...	S31603	16Cr–12Ni–2Mo	8	(1)(9)(30)	70	25	0.90
	TP316L	...	S31603	16Cr–12Ni–2Mo	8	(1)(9)(31)	70	25	0.80
Plate, Sheet, and Strip									
Austenitic									
A 240	304	...	S30400	18Cr–8Ni	8	(10)(11)	75	30	1.00
	304	...	S30400	18Cr–8Ni	8	(9)(10)(11)	75	30	1.00
	304L	...	S30403	18Cr–8Ni	8	(1)	70	25	1.00
	304L	...	S30403	18Cr–8Ni	8	(1)(9)	70	25	1.00
	304N	...	S30451	18Cr–8Ni–N	8	(1)(10)	80	35	1.00
	304N	...	S30451	18Cr–8Ni–N	8	(1)(9)(10)	80	35	1.00
A 240	...	...	S30815	21Cr–11Ni–N	8	(1)	87	45	1.00
	...	...	S30815	21Cr–11Ni–N	8	(1)(9)	87	45	1.00
A 240	309H	...	S30909	23Cr–12Ni	8	(9)(11)(27)	75	30	1.00
	309H	...	S30909	23Cr–12Ni	8	(11)(27)	75	30	1.00
	309S	...	S30908	23Cr–12Ni	8	(1)(10)	75	30	1.00
	309S	...	S30908	23Cr–12Ni	8	(1)(9)(10)	75	30	1.00
A 240	310H	...	S31009	25Cr–20Ni	8	(9)	75	30	1.00
	310H	...	S31009	25Cr–20Ni	8	...	75	30	1.00
	310S	...	S31008	25Cr–20Ni	8	(10)(11)(14)	75	30	1.00
	310S	...	S31008	25Cr–20Ni	8	(9)(10)(11)(14)	75	30	1.00
	310S	...	S31008	25Cr–20Ni	8	(10)(11)(15)	75	30	1.00
	310S	...	S31008	25Cr–20Ni	8	(9)(10)(11)(15)	75	30	1.00
A 240	316	...	S31600	16Cr–12Ni–2Mo	8	(10)(11)	75	30	1.00
	316	...	S31600	16Cr–12Ni–2Mo	8	(9)(10)(11)	75	30	1.00
	316L	...	S31603	16Cr–12Ni–2Mo	8	(1)	70	25	1.00
	316L	...	S31603	16Cr–12Ni–2Mo	8	(1)(9)	70	25	1.00
	316N	...	S31651	16Cr–12Ni–2Mo–N	8	(10)	80	35	1.00
	316N	...	S31651	16Cr–12Ni–2Mo–N	8	(9)(10)	80	35	1.00

--`,,```,,,,````-`-`,,`,,`,`,,`---

Copyright ASME International
Provided by IHS under license with ASME
No reproduction or networking permitted without license from IHS Not for Resale

Table A-3 Stainless Steels (Cont'd)

Maximum Allowable Stress Values in Tension, ksi, for Metal Temperature, °F, Not Exceeding																		Type or Grade	Spec. No.
−20 to 100	200	300	400	500	600	650	700	750	800	850	900	950	1,000	1,050	1,100	1,150	1,200		
Welded Pipe and Tube – Filler Metal Added (Cont'd)																			
Austenitic (Cont'd)																			
18.8	17.7	15.6	14.3	13.3	12.6	12.3	12.1	11.9	11.7	11.6	11.5	11.4	11.3	11.2	11.0	9.8	7.4	TP316	A 409
16.9	15.9	14.0	12.9	12.0	11.3	11.1	10.9	10.7	10.5	10.4	10.4	10.3	10.2	10.1	9.9	8.8	6.7	TP316	
15.0	14.2	12.5	11.4	10.6	10.1	9.8	9.7	9.5	9.4	9.3	9.2	9.1	9.0	9.0	8.8	7.8	5.9	TP316	
18.8	18.8	18.4	18.1	18.0	17.0	16.7	16.3	16.1	15.9	15.7	15.6	15.4	15.3	15.1	12.4	9.8	7.4	TP316	
16.9	16.9	16.6	16.3	16.2	15.3	15.0	14.7	14.5	14.3	14.1	14.0	13.9	13.8	13.6	11.2	8.8	6.7	TP316	
15.0	15.0	14.7	14.5	14.4	13.6	13.4	13.0	12.9	12.7	12.6	12.5	12.3	12.2	12.1	9.9	7.8	5.9	TP316	
16.7	14.1	12.7	11.7	10.9	10.4	10.2	10.0	9.8	9.6	9.4	...	...	...	...	...	...	...	TP316L	A 409
15.0	12.7	11.4	10.5	9.8	9.4	9.2	9.0	8.8	8.6	8.5	...	...	...	...	...	...	...	TP316L	
13.4	11.3	10.2	9.4	8.7	8.3	8.2	8.0	7.8	7.7	7.5	...	...	...	...	...	...	...	TP316L	
16.7	16.7	16.0	15.6	14.8	14.0	13.8	13.5	13.2	13.0	12.7	...	...	...	...	...	...	...	TP316L	
15.0	15.0	14.4	14.0	13.3	12.6	12.4	12.2	11.9	11.7	11.4	...	...	...	...	...	...	...	TP316L	
13.4	13.4	12.8	12.5	11.8	11.2	11.0	10.8	10.6	10.4	10.2	...	...	...	...	...	...	...	TP316L	
Plate, Sheet, and Strip																			
Austenitic																			
18.8	15.7	14.1	13.0	12.2	11.4	11.3	11.1	10.8	10.6	10.4	10.2	10.0	9.8	9.5	8.9	7.7	6.1	304	A 240
18.8	17.8	16.6	16.2	15.9	15.9	15.9	15.9	15.6	15.2	14.9	14.7	14.4	13.8	12.2	9.8	7.7	6.1	304	
15.6	13.4	12.0	11.0	10.3	9.7	9.5	9.4	9.2	9.1	...	...	...	...	...	...	...	...	304L	
15.7	15.7	15.3	14.7	14.4	14.0	13.7	13.5	13.3	13.0	...	...	...	...	...	...	...	...	304L	
20.0	17.9	15.7	14.1	13.0	12.4	12.2	11.9	11.7	11.5	11.3	11.0	10.8	10.5	10.3	9.7	7.7	6.0	304N	
20.0	20.0	19.0	18.3	17.8	17.4	17.3	17.1	16.9	16.6	16.3	15.9	15.6	15.0	12.4	9.7	7.7	6.0	304N	
24.9	24.7	22.0	19.9	18.5	17.7	17.4	17.2	17.0	16.8	16.6	16.4	16.2	14.9	11.6	9.0	6.9	5.2	...	A 240
24.9	24.7	23.3	22.4	21.8	21.4	21.2	21.0	20.8	20.6	20.3	20.0	19.1	14.9	11.6	9.0	6.9	5.2	...	
18.8	18.8	18.7	18.3	17.9	17.5	17.3	17.1	16.8	16.5	16.1	15.6	15.1	13.8	10.3	7.6	5.5	4.0	309H	A 240
18.8	17.6	16.1	15.1	14.1	13.9	13.7	13.5	13.3	13.1	12.9	12.7	12.5	12.3	10.3	7.6	5.5	4.0	309H	
18.8	16.9	15.9	14.9	14.1	13.4	13.1	12.7	12.5	12.2	11.9	11.7	11.2	10.2	8.5	6.5	5.0	3.8	309S	
18.8	17.2	16.4	15.9	15.5	15.3	15.2	15.1	15.0	14.9	14.6	13.9	12.5	10.5	8.5	6.5	5.0	3.8	309S	
18.8	18.4	17.6	17.4	17.4	17.4	17.4	17.4	17.2	17.0	16.7	16.3	15.9	13.8	10.3	7.6	5.5	4.0	310H	A 240
18.8	17.6	16.1	15.1	14.3	13.7	13.5	13.3	13.1	12.9	12.7	12.5	12.3	12.1	10.3	7.6	5.5	4.0	310H	
18.8	16.9	15.9	14.9	14.1	13.4	13.1	12.7	12.5	12.2	11.9	11.7	11.4	10.8	9.8	8.5	7.3	6.0	310S	
18.8	17.2	16.4	15.9	15.5	15.3	15.2	15.1	15.0	14.9	14.6	13.9	12.5	11.0	9.8	8.5	7.3	6.0	310S	
18.8	16.9	15.9	14.9	14.1	13.4	13.1	12.7	12.5	12.2	11.9	11.7	11.1	9.9	7.1	5.0	3.6	2.5	310S	
18.8	17.2	16.4	15.9	15.5	15.3	15.2	15.1	15.0	14.9	14.6	13.9	12.5	11.0	7.1	5.0	3.6	2.5	310S	
18.8	16.2	14.6	13.4	12.5	11.8	11.6	11.3	11.2	11.0	10.9	10.8	10.7	10.6	10.5	10.3	9.3	7.4	316	A 240
18.8	18.8	18.4	18.1	18.0	17.0	16.7	16.3	16.1	15.9	15.7	15.6	15.4	15.3	14.5	12.4	9.8	7.4	316	
16.7	14.1	12.7	11.7	10.9	10.4	10.2	10.0	9.8	9.6	9.4	9.2	8.9	8.8	8.0	7.9	6.5	6.4	316L	
16.7	16.7	16.0	15.6	14.8	14.0	13.8	13.5	13.2	13.0	12.7	12.4	12.0	11.9	10.8	10.2	8.8	6.4	316L	
20.0	19.4	17.8	16.5	15.4	14.6	14.2	13.9	13.6	13.3	13.1	12.8	12.6	12.4	12.2	11.7	9.8	7.4	316N	
20.0	20.0	19.2	18.8	18.6	18.6	18.6	18.6	18.5	18.4	18.3	18.1	17.8	17.4	15.8	12.4	9.8	7.4	316N	

Copyright ASME International
Provided by IHS under license with ASME
No reproduction or networking permitted without license from IHS
Not for Resale

Table A-3 Stainless Steels (Cont'd)

Spec. No.	Type or Grade	Class	UNS Alloy No.	Nominal Composition	P-No.	Notes	Specified Minimum Tensile, ksi	Specified Minimum Yield, ksi	*E* or *F*
Plate, Sheet, and Strip (Cont'd)									
Austenitic (Cont'd)									
A 240	317	...	S31700	18Cr–13Ni–3Mo	8	(1)(10)(11)	75	30	1.00
	317	...	S31700	18Cr–13Ni–3Mo	8	(1)(9)(10)(11)	75	30	1.00
	317L	...	S31703	18Cr–13Ni–3Mo	8	(1)	75	30	1.00
	317L	...	S31703	18Cr–13Ni–3Mo	8	(1)(9)	75	30	1.00
	321	...	S32100	18Cr–10Ni–Ti	8	(10)(11)	75	30	1.00
	321	...	S32100	18Cr–10Ni–Ti	8	(9)(10)(11)	75	30	1.00
A 240	347	...	S34700	18Cr–10Ni–Cb	8	(10)(11)	75	30	1.00
	347	...	S34700	18Cr–10Ni–Cb	8	(9)(10)(11)	75	30	1.00
	348	...	S34800	18Cr–10Ni–Cb	8	(1)(10)(11)	75	30	1.00
	348	...	S34800	18Cr–10Ni–Cb	8	(1)(9)(10)(11)	75	30	1.00
A 240	XM15	...	S38100	18Cr–8Ni–2Si	8	(1)	75	30	1.00
	XM15	...	S38100	18Cr–8Ni–2Si	8	(1)(9)	75	30	1.00
	...	...	S31254	20Cr–18Ni–6Mo	8	(1)(32)	94	44	1.00
	...	...	S31254	20Cr–18Ni–6Mo	8	(1)(9)(32)	94	44	1.00
Ferritic/Martensitic									
A 240	405	...	S40500	12Cr–1Al	7	(3)	60	25	1.00
	410	...	S41000	13Cr	6	(1)	65	30	1.00
	410S	...	S41008	13Cr	7	(1)	60	30	1.00
	429	...	S42900	15Cr	6	(1)(3)	65	30	1.00
A 240	430	...	S43000	17Cr	7	(1)(3)	65	30	1.00
	XM27	...	S44627	26Cr–1Mo	10I	(1)(3)(32)	65	40	1.00
	XM33	...	S44626	27Cr–1Mo–Ti	10I	(2)(32)	68	45	1.00
Forgings									
Austenitic									
A 182	F44	...	S31254	20Cr–18Ni–6Mo	8	(1)(32)	94	44	1.00
	F44	...	S31254	20Cr–18Ni–6Mo	8	(1)(9)(32)	94	44	1.00
A 182	F304	...	S30400	18Cr–8Ni	8	(10)(12)	70	30	1.00
	F304	...	S30400	18Cr–8Ni	8	(9)(10)(12)	70	30	1.00
	F304	...	S30400	18Cr–8Ni	8	(10)	75	30	1.00
	F304	...	S30400	18Cr–8Ni	8	(9)(10)	75	30	1.00
A 182	F304H	...	S30409	18Cr–8Ni	8	(12)	70	30	1.00
	F304H	...	S30409	18Cr–8Ni	8	(9)(12)	70	30	1.00
	F304H	...	S30409	18Cr–8Ni	8	...	75	30	1.00
	F304H	...	S30409	18Cr–8Ni	8	(9)	75	30	1.00
A 182	F304L	...	S30403	18Cr–8Ni	8	(1)	65	25	1.00
	F304L	...	S30403	18Cr–8Ni	8	(1)(9)	65	25	1.00
	F304N	...	S30451	18Cr–8Ni–N	8	(10)	80	35	1.00
	F304N	...	S30451	18Cr–8Ni–N	8	(9)(10)	80	35	1.00

Copyright ASME International
Provided by IHS under license with ASME
No reproduction or networking permitted without license from IHS
Not for Resale

Table A-3 Stainless Steels (Cont'd)

Maximum Allowable Stress Values in Tension, ksi, for Metal Temperature, °F, Not Exceeding																		Type or Grade	Spec. No.
−20 to 100	200	300	400	500	600	650	700	750	800	850	900	950	1,000	1,050	1,100	1,150	1,200		
																		Plate, Sheet, and Strip (Cont'd) Austenitic (Cont'd)	
18.8	16.2	14.6	13.4	12.5	11.8	11.6	11.3	11.2	11.0	10.9	10.8	10.7	10.6	10.5	10.3	9.3	7.4	317	A 240
18.8	18.8	18.4	18.1	18.0	17.0	16.7	16.3	16.1	15.9	15.7	15.5	15.4	15.3	14.5	12.4	9.8	7.4	317	
18.8	16.2	14.6	13.4	12.5	11.8	11.6	11.3	11.2	11.0	10.9	...	...	...	...	...	...	...	317L	
18.8	18.8	18.4	18.1	18.0	17.0	16.7	16.3	16.1	15.9	15.7	...	...	...	...	...	...	...	317L	
18.8	15.9	14.2	12.9	12.0	11.4	11.2	11.0	10.9	10.8	10.7	10.6	10.6	10.4	9.2	6.9	5.0	3.6	321	
18.8	18.4	17.3	17.1	17.1	16.4	16.1	15.8	15.7	15.5	15.4	15.3	15.2	13.8	9.6	6.9	5.0	3.6	321	
18.8	17.3	16.1	15.0	14.1	13.4	13.2	12.9	12.8	12.7	12.7	12.6	12.6	12.5	11.9	9.1	6.1	4.4	347	A 240
18.8	17.9	16.4	15.5	14.9	14.7	14.7	14.7	14.7	14.7	14.7	14.7	14.6	14.0	12.1	9.1	6.1	4.4	347	
18.8	17.3	16.1	15.0	14.1	13.4	13.2	12.9	12.8	12.7	12.7	12.6	12.6	12.5	11.9	9.1	6.1	4.4	348	
18.8	17.9	16.4	15.5	14.9	14.7	14.7	14.7	14.7	14.7	14.7	14.7	14.6	14.0	12.1	9.1	6.1	4.4	348	
18.8	15.6	14.0	12.9	12.1	11.4	11.2	11.0	10.8	10.5	10.3	10.1	9.9	9.7	...	...	...	...	XM15	A 240
18.8	17.7	16.6	16.1	15.9	15.9	15.9	15.9	15.5	15.1	14.9	14.6	14.3	13.7	...	...	...	...	XM15	
23.5	23.5	21.4	19.9	18.5	17.9	17.7	17.5	17.3	...	...	...	...	...	...	...	...	...	...	
23.5	23.5	22.4	21.3	20.5	20.1	19.9	19.9	19.8	...	...	...	...	...	...	...	...	...	...	
																		Ferritic/Martensitic	
15.0	14.3	13.8	13.3	12.9	12.4	12.3	12.1	...	...	...	...	...	...	...	...	...	...	405	A 240
16.3	15.5	15.0	14.4	13.9	13.5	13.3	13.1	12.7	12.0	11.3	10.5	8.8	6.4	4.4	2.9	1.8	1.0	410	
15.0	14.3	13.8	13.3	12.9	12.4	12.3	12.1	11.7	11.1	10.4	9.7	8.4	6.4	4.4	2.9	1.8	1.0	410S	
16.3	15.5	15.0	14.4	13.9	13.5	13.3	13.1	12.7	12.0	11.3	10.5	9.2	6.5	4.5	3.2	2.4	1.8	429	
16.3	15.5	15.0	14.4	13.9	13.5	13.3	13.1	12.7	12.0	11.3	10.5	9.2	6.5	4.5	3.2	2.4	1.8	430	A 240
16.2	16.2	15.9	15.9	15.9	15.9	15.9	...	...	...	...	...	...	...	...	...	...	...	XM27	
17.0	17.0	16.8	16.6	16.4	16.1	15.9	...	...	...	...	...	...	...	...	...	...	...	XM33	
																		Forgings Austenitic	
23.5	23.5	21.4	19.9	18.5	17.9	17.7	17.5	17.3	...	...	...	...	...	...	...	...	...	F44	A 182
23.5	23.5	22.4	21.3	20.5	20.1	19.9	19.9	19.8	...	...	...	...	...	...	...	...	...	F44	
17.5	15.7	14.1	13.0	12.2	11.4	11.3	11.1	10.8	10.6	10.4	10.2	10.0	9.8	9.5	8.9	7.7	6.1	F304	A 182
17.5	16.6	15.5	15.1	14.8	14.8	14.8	14.8	14.7	14.6	14.4	14.2	13.9	13.4	12.0	9.7	7.7	6.1	F304	
18.8	15.7	14.1	13.0	12.2	11.4	11.3	11.1	10.8	10.6	10.4	10.2	10.0	9.8	9.5	8.9	7.7	6.1	F304	
18.8	17.8	16.6	16.2	15.9	15.9	15.9	15.9	15.6	15.2	14.9	14.7	14.4	13.8	12.2	9.8	7.7	6.1	F304	
17.5	15.7	14.1	13.0	12.2	11.4	11.3	11.1	10.8	10.6	10.4	10.2	10.0	9.8	9.5	8.9	7.7	6.1	F304H	A 182
17.5	16.6	15.5	15.1	14.8	14.8	14.8	14.8	14.7	14.6	14.4	14.2	13.9	13.4	12.0	9.7	7.7	6.1	F304H	
18.8	15.7	14.1	13.0	12.2	11.4	11.3	11.1	10.8	10.6	10.4	10.2	10.0	9.8	9.5	8.9	7.7	6.1	F304H	
18.8	17.8	16.6	16.2	15.9	15.9	15.9	15.9	15.6	15.2	14.9	14.7	14.4	13.8	12.2	9.8	7.7	6.1	F304H	
15.7	13.4	12.0	11.0	10.3	9.7	9.5	9.4	9.2	9.1	...	...	...	...	...	...	...	...	F304L	A 182
15.5	15.4	14.2	13.6	13.4	13.3	13.2	13.1	13.0	12.9	...	...	...	...	...	...	...	...	F304L	
20.0	17.9	15.7	14.1	13.0	12.4	12.2	11.9	11.8	11.6	11.3	11.1	10.8	10.6	10.3	9.8	7.7	6.1	F304N	
20.0	20.0	19.0	18.3	17.8	17.4	17.3	17.2	16.9	16.7	16.3	15.9	15.6	15.0	12.4	9.8	7.7	6.1	F304N	

Copyright ASME International
Provided by IHS under license with ASME
No reproduction or networking permitted without license from IHS
Not for Resale

Table A-3 Stainless Steels (Cont'd)

Spec. No.	Type or Grade	Class	UNS Alloy No.	Nominal Composition	P-No.	Notes	Specified Minimum Tensile, ksi	Specified Minimum Yield, ksi	*E* or *F*
Forgings (Cont'd)									
Austenitic (Cont'd)									
A 182	...	...	S30815	21Cr–11Ni–N	8	(1)	87	45	1.00
	...	...	S30815	21Cr–11Ni–N	8	(1)(9)	87	45	1.00
A 182	F310	...	S31000	25Cr–20Ni	8	(1)(10)(14)	75	30	1.00
	F310	...	S31000	25Cr–20Ni	8	(1)(9)(10)(14)	75	30	1.00
	F310	...	S31000	25Cr–20Ni	8	(1)(10)(15)	75	30	1.00
	F310	...	S31000	25Cr–20Ni	8	(1)(9)(10)(15)	75	30	1.00
A 182	F316	...	S31600	16Cr–12Ni–2Mo	8	(10)(12)	70	30	1.00
	F316	...	S31600	16Cr–12Ni–2Mo	8	(9)(10)(12)	70	30	1.00
	F316	...	S31600	16Cr–12Ni–2Mo	8	(10)	75	30	1.00
	F316	...	S31600	16Cr–12Ni–2Mo	8	(9)(10)	75	30	1.00
A 182	F316H	...	S31609	16Cr–12Ni–2Mo	8	(12)	70	30	1.00
	F316H	...	S31609	16Cr–12Ni–2Mo	8	(9)(12)	70	30	1.00
	F316H	...	S31609	16Cr–12Ni–2Mo	8	...	75	30	1.00
	F316H	...	S31609	16Cr–12Ni–2Mo	8	(9)	75	30	1.00
A 182	F316L	...	S31603	16Cr–12Ni–2Mo	8	(1)	65	25	1.00
	F316L	...	S31603	16Cr–12Ni–2Mo	8	(1)(9)	65	25	1.00
	F316N	...	S31651	16Cr–12Ni–2Mo–N	8	(10)	80	35	1.00
	F316N	...	S31651	16Cr–12Ni–2Mo–N	8	(9)(10)	80	35	1.00
A 182	F321	...	S32100	18Cr–10Ni–Ti	8	(12)	70	30	1.00
	F321	...	S32100	18Cr–10Ni–Ti	8	(9)(12)	70	30	1.00
	F321	...	S32100	18Cr–10Ni–Ti	8	(10)	75	30	1.00
	F321	...	S32100	18Cr–10Ni–Ti	8	(9)(10)	75	30	1.00
A 182	F321H	...	S32109	18Cr–10Ni–Ti	8	(12)	70	30	1.00
	F321H	...	S32109	18Cr–10Ni–Ti	8	(9)(12)	70	30	1.00
	F321H	...	S32109	18Cr–10Ni–Ti	8	...	75	30	1.00
	F321H	...	S32109	18Cr–10Ni–Ti	8	(9)	75	30	1.00
A 182	F347	...	S34700	18Cr–10Ni–Cb	8	(12)	70	30	1.00
	F347	...	S34700	18Cr–10Ni–Cb	8	(9)(12)	70	30	1.00
	F347	...	S34700	18Cr–10Ni–Cb	8	(10)	75	30	1.00
	F347	...	S34700	18Cr–10Ni–Cb	8	(9)(10)	75	30	1.00
A 182	F347H	...	S34709	18Cr–10Ni–Cb	8	(12)	70	30	1.00
	F347H	...	S34709	18Cr–10Ni–Cb	8	(9)(12)	70	30	1.00
	F347H	...	S34709	18Cr–10Ni–Cb	8	...	75	30	1.00
	F347H	...	S34709	18Cr–10Ni–Cb	8	(9)	75	30	1.00
A 182	F348	...	S34800	18Cr–10Ni–Cb	8	(12)	70	30	1.00
	F348	...	S34800	18Cr–10Ni–Cb	8	(9)(12)	70	30	1.00
	F348	...	S34800	18Cr–10Ni–Cb	8	(10)	75	30	1.00
	F348	...	S34800	18Cr–10Ni–Cb	8	(9)(10)	75	30	1.00

Copyright ASME International
Provided by IHS under license with ASME
No reproduction or networking permitted without license from IHS
Not for Resale

Table A-3 Stainless Steels (Cont'd)

Maximum Allowable Stress Values in Tension, ksi, for Metal Temperature, °F, Not Exceeding																		Type or Grade	Spec. No.
−20 to 100	200	300	400	500	600	650	700	750	800	850	900	950	1,000	1,050	1,100	1,150	1,200		
																		Forgings (Cont'd) Austenitic (Cont'd)	
24.9	24.7	22.0	19.9	18.5	17.7	17.4	17.2	17.0	16.8	16.6	16.4	16.2	14.9	11.6	9.0	6.9	5.2	. . .	A 182
24.9	24.7	23.3	22.4	21.8	21.4	21.2	21.0	20.8	20.6	20.3	20.0	19.1	14.9	11.6	9.0	6.9	5.2	. . .	
18.8	16.9	15.9	14.9	14.1	13.4	13.1	12.7	12.5	12.2	11.9	11.7	11.4	10.8	9.8	8.5	7.3	6.0	F310	A 182
18.8	17.2	16.4	15.9	15.5	15.3	15.2	15.1	15.0	14.9	14.6	13.9	12.5	11.0	9.8	8.5	7.3	6.0	F310	
18.8	16.9	15.9	14.9	14.1	13.4	13.1	12.7	12.5	12.2	11.9	11.7	11.1	9.9	7.1	5.0	3.6	2.5	F310	
18.8	17.2	16.4	15.9	15.5	15.3	15.2	15.1	15.0	14.9	14.6	13.9	12.5	11.0	7.1	5.0	3.6	2.5	F310	
17.5	16.2	14.6	13.4	12.5	11.8	11.6	11.3	11.2	11.0	10.9	10.8	10.7	10.6	10.5	10.3	9.3	7.4	F316	A 182
17.5	17.5	17.1	16.8	16.8	16.8	16.7	16.3	16.1	15.9	15.7	15.6	15.4	15.0	14.1	12.4	9.8	7.4	F316	
18.8	16.2	14.6	13.4	12.5	11.8	11.6	11.3	11.2	11.0	10.9	10.8	10.7	10.6	10.5	10.3	9.3	7.4	F316	
18.8	18.8	18.4	18.1	18.0	17.0	16.7	16.3	16.1	15.9	15.7	15.6	15.4	15.3	14.5	12.4	9.8	7.4	F316	
17.5	16.2	14.6	13.4	12.5	11.8	11.6	11.3	11.2	11.0	10.9	10.8	10.7	10.6	10.5	10.3	9.3	7.4	F316H	A 182
17.5	17.5	17.1	16.8	16.8	16.8	16.7	16.3	16.1	15.9	15.7	15.6	15.4	15.0	14.1	12.4	9.8	7.4	F316H	
18.8	16.2	14.6	13.4	12.5	11.8	11.6	11.3	11.2	11.0	10.9	10.8	10.7	10.6	10.5	10.3	9.3	7.4	F316H	
18.8	18.8	18.4	18.1	18.0	17.0	16.7	16.3	16.1	15.9	15.7	15.6	15.4	15.3	14.5	12.4	9.8	7.4	F316H	
15.7	13.3	11.9	10.8	10.0	9.4	9.2	9.0	8.8	8.6	8.4	. . .	. . .	. . .	. . .	. . .	. . .	. . .	F316L	A 182
15.7	15.7	15.7	15.5	14.4	13.5	13.2	12.9	12.6	12.4	12.1	. . .	. . .	. . .	. . .	. . .	. . .	. . .	F316L	
17.0	16.5	15.1	14.0	13.1	12.4	12.1	11.8	11.6	11.3	11.1	10.9	10.7	10.5	10.4	9.9	8.3	6.3	F316N	
17.0	17.0	16.3	16.0	15.8	15.8	15.8	15.8	15.7	15.6	15.6	15.4	15.1	14.8	12.4	10.5	8.3	6.3	F316N	
17.5	15.9	14.2	12.9	12.0	11.4	11.2	11.0	10.9	10.8	10.7	10.6	10.6	10.4	9.2	6.9	5.0	3.6	F321	A 182
17.5	17.2	16.2	16.0	16.0	16.0	16.0	15.8	15.7	15.5	15.4	15.3	15.2	13.8	9.6	6.9	5.0	3.6	F321	
18.8	15.9	14.2	12.9	12.0	11.4	11.2	11.0	10.9	10.8	10.7	10.6	10.6	10.4	9.2	6.9	5.0	3.6	F321	
18.8	18.4	17.3	17.1	17.1	16.4	16.1	15.8	15.7	15.5	15.4	15.3	15.2	13.8	9.6	6.9	5.0	3.6	F321	
17.5	15.9	14.2	12.9	12.0	11.4	11.2	11.0	10.9	10.8	10.7	10.6	10.6	10.5	10.1	8.8	6.9	5.4	F321H	A 182
17.5	17.2	16.2	16.0	16.0	16.0	16.0	15.8	15.7	15.5	15.4	15.3	15.2	14.0	11.7	9.1	6.9	5.4	F321H	
18.8	15.9	14.2	12.9	12.0	11.4	11.2	11.0	10.9	10.8	10.7	10.6	10.6	10.5	10.1	8.8	6.9	5.4	F321H	
18.8	18.4	17.3	17.1	17.1	16.4	16.1	15.8	15.7	15.5	15.4	15.3	15.2	14.0	11.7	9.1	6.9	5.4	F321H	
17.5	16.7	15.3	14.4	13.9	13.4	13.2	12.9	12.8	12.7	12.7	12.6	12.6	12.5	11.9	9.1	6.1	4.4	F347	A 182
17.5	16.7	15.3	14.4	13.9	13.7	13.7	13.7	13.7	13.7	13.7	13.7	13.6	13.2	12.0	9.1	6.1	4.4	F347	
18.8	17.3	16.1	15.0	14.1	13.4	13.2	12.9	12.8	12.7	12.7	12.6	12.6	12.5	11.9	9.1	6.1	4.4	F347	
18.8	17.9	16.4	15.5	14.9	14.7	14.7	14.7	14.7	14.7	14.7	14.7	14.6	14.0	12.1	9.1	6.1	4.4	F347	
17.5	16.7	15.3	14.4	13.9	13.4	13.2	12.9	12.8	12.7	12.7	12.6	12.6	12.6	12.5	12.1	10.5	7.9	F347H	A 182
17.5	16.7	15.3	14.4	13.9	13.7	13.7	13.7	13.7	13.7	13.7	13.7	13.6	13.5	13.2	12.5	10.5	7.9	F347H	
18.8	17.3	16.1	15.0	14.1	13.4	13.2	12.9	12.8	12.8	12.7	12.6	12.6	12.6	12.5	12.1	10.5	7.9	F347H	
18.8	17.9	16.4	15.5	14.9	14.7	14.7	14.7	14.7	14.7	14.7	14.7	14.6	14.4	14.1	13.0	10.5	7.9	F347H	
17.5	16.7	15.3	14.4	13.9	13.4	13.2	12.9	12.8	12.7	12.7	12.6	12.6	12.5	11.9	9.1	6.1	4.4	F348	A 182
17.5	16.7	15.3	14.4	13.9	13.7	13.7	13.7	13.7	13.7	13.7	13.7	13.6	13.2	12.0	9.1	6.1	4.4	F348	
18.8	17.3	16.1	15.0	14.1	13.4	13.2	12.9	12.8	12.7	12.7	12.6	12.6	12.5	11.9	9.1	6.1	4.4	F348	
18.8	17.9	16.4	15.5	14.9	14.7	14.7	14.7	14.7	14.7	14.7	14.7	14.6	14.0	12.1	9.1	6.1	4.4	F348	

Copyright ASME International
Provided by IHS under license with ASME
No reproduction or networking permitted without license from IHS
Not for Resale

Table A-3 Stainless Steels (Cont'd)

Spec. No.	Type or Grade	Class	UNS Alloy No.	Nominal Composition	P-No.	Notes	Specified Minimum Tensile, ksi	Specified Minimum Yield, ksi	*E* or *F*
Forgings (Cont'd)									
Austenitic (Cont'd)									
A 182	F348H	...	S34809	18Cr–10Ni–Cb	8	(12)	70	30	1.00
	F348H	...	S34809	18Cr–10Ni–Cb	8	(9)(12)	70	30	1.00
	F348H	...	S34809	18Cr–10Ni–Cb	8	...	75	30	1.00
	F348H	...	S34809	18Cr–10Ni–Cb	8	(9)	75	30	1.00
Ferritic/Martensitic									
A 182	FXM-27b	...	S44627	27Cr–1Mo	10I	(2)	60	35	1.00
A 336	FXM-27Cb	...	S44627	27Cr–1Mo	10I	(2)	60	35	1.00
Fittings (Seamless and Welded)									
Austenitic									
A 403	WP304	...	S30400	18Cr–8Ni	8	(1)(4)(7)(10)(11)	75	30	1.00
	WP304	...	S30400	18Cr–8Ni	8	(1)(4)(7)(9)(10)(11)	75	30	1.00
	WP304H	...	S30409	18Cr–8Ni	8	(1)(4)(7)(11)	75	30	1.00
	WP304H	...	S30409	18Cr–8Ni	8	(1)(4)(7)(9)(11)	75	30	1.00
A 403	WP304L	...	S30403	18Cr–8Ni	8	(1)(7)(11)	70	25	1.00
	WP304L	...	S30403	18Cr–8Ni	8	(1)(7)(9)(11)	70	25	1.00
	WP304N	...	S30451	18Cr–8Ni–N	8	(1)(4)(7)(10)	80	35	1.00
	WP304N	...	S30451	18Cr–8Ni–N	8	(1)(4)(7)(9)(10)	80	35	1.00
A 403	WP309	...	S30900	23Cr–12Ni	8	(1)(7)(10)(11)	75	30	1.00
	WP309	...	S30900	23Cr–12Ni	8	(1)(7)(9)(10)(11)	75	30	1.00
	WP310	...	S31000	23Cr–20Ni	8	(1)(7)(10)(11)(14)	75	30	1.00
	WP310	...	S31000	23Cr–20Ni	8	(1)(7)(9)(10)(11)(14)	75	30	1.00
	WP310	...	S31000	23Cr–20Ni	8	(1)(7)(10)(11)(15)	75	30	1.00
	WP310	...	S31000	23Cr–20Ni	8	(1)(7)(9)(10)(11)(15)	75	30	1.00
A 403	WP316	...	S31600	16Cr–12Ni–2Mo	8	(4)(7)(10)(11)	75	30	1.00
	WP316	...	S31600	16Cr–12Ni–2Mo	8	(4)(7)(9)(10)(11)	75	30	1.00
	WP316H	...	S31609	16Cr–12Ni–2Mo	8	(4)(7)(11)	75	30	1.00
	WP316H	...	S31609	16Cr–12Ni–2Mo	8	(4)(7)(9)(11)	75	30	1.00
A 403	WP316L	...	S31603	16Cr–12Ni–2Mo	8	(1)(7)(11)	65	25	1.00
	WP316L	...	S31603	16Cr–12Ni–2Mo	8	(1)(7)(9)(11)	65	25	1.00
	WP316N	...	S31651	16Cr–12Ni–2Mo–N	8	(1)(7)(10)	80	35	1.00
	WP316N	...	S31651	16Cr–12Ni–2Mo–N	8	(1)(7)(9)(10)	80	35	1.00
A 403	WP317	...	S31700	18Cr–13Ni–3Mo	8	(1)(7)(10)(11)	75	30	1.00
	WP317	...	S31700	18Cr–13Ni–3Mo	8	(1)(7)(9)(10)(11)	75	30	1.00
	WP321	...	S32100	18Cr–10Ni–Ti	8	(4)(7)(10)(11)	75	30	1.00
	WP321	...	S32100	18Cr–10Ni–Ti	8	(4)(7)(9)(10)(11)	75	30	1.00
	WP321H	...	S32109	18Cr–10Ni–Ti	8	(4)(7)(11)	75	30	1.00
	WP321H	...	S32109	18Cr–10Ni–Ti	8	(4)(7)(9)(11)	75	30	1.00

--`,,```,,,,````-`-`,,`,,`,`,,`---
Copyright ASME International
Provided by IHS under license with ASME
No reproduction or networking permitted without license from IHS
Not for Resale

Table A-3 Stainless Steels (Cont'd)

Maximum Allowable Stress Values in Tension, ksi, for Metal Temperature, °F, Not Exceeding																		Type or Grade	Spec. No.
−20 to 100	200	300	400	500	600	650	700	750	800	850	900	950	1,000	1,050	1,100	1,150	1,200		
																		Forgings (Cont'd) Austenitic (Cont'd)	
17.5	16.7	15.3	14.4	13.9	13.4	13.2	12.9	12.8	12.7	12.7	12.6	12.6	12.6	12.5	12.1	10.5	7.9	F348H	A 182
17.5	16.7	15.3	14.4	13.9	13.7	13.7	13.7	13.7	13.7	13.7	13.7	13.6	13.5	13.2	12.5	10.5	7.9	F348H	
18.8	17.3	16.1	15.0	14.1	13.4	13.2	12.9	12.8	12.8	12.7	12.6	12.6	12.6	12.5	12.1	10.5	7.9	F348H	
18.8	17.9	16.4	15.5	14.9	14.7	14.7	14.7	14.7	14.7	14.7	14.7	14.6	14.4	14.1	13.0	10.5	7.9	F348H	
																		Ferritic/Martensitic	
15.0	15.0	14.6	14.2	14.2	14.2	14.2	...	...	...	...	...	...	...	...	...	...	...	FXM-27b	A 182
15.0	15.0	14.6	14.2	14.2	14.2	14.2	...	...	...	...	...	...	...	...	...	...	...	FXM 27Cb	A 336
																		Fittings (Seamless and Welded) Austenitic	
18.8	15.7	14.1	13.0	12.2	11.4	11.3	11.1	10.8	10.6	10.4	10.2	10.0	9.8	9.5	8.9	7.7	6.1	WP304	A 403
18.8	17.8	16.6	16.2	15.9	15.9	15.9	15.9	15.5	15.2	14.9	14.7	14.4	13.8	12.2	9.8	7.7	6.1	WP304	
18.8	15.7	14.1	13.0	12.2	11.4	11.3	11.1	10.8	10.6	10.4	10.2	10.0	9.8	9.5	8.9	7.7	6.1	WP304H	
18.8	17.8	16.6	16.2	15.9	15.9	15.9	15.9	15.5	15.2	14.9	14.7	14.4	13.8	12.2	9.8	7.7	6.1	WP304H	
15.7	13.4	12.0	11.0	10.3	9.7	9.5	9.4	9.2	9.1	...	...	...	...	...	...	...	...	WP304L	A 403
15.7	15.7	15.7	15.5	14.4	13.5	13.2	12.9	12.6	12.4	...	...	...	...	...	...	...	...	WP304L	
20.0	17.9	15.7	14.1	13.0	12.4	12.2	11.9	11.7	11.5	11.3	11.1	10.8	10.5	10.3	9.7	7.7	6.0	WP304N	
20.0	20.0	19.0	18.3	17.8	17.4	17.3	17.1	16.9	16.6	16.3	15.9	15.6	15.0	12.4	9.7	7.7	6.0	WP304N	
18.8	16.9	15.9	14.9	14.1	13.4	13.1	12.7	12.5	12.2	11.9	11.7	11.2	10.2	8.5	6.5	5.0	3.8	WP309	A 403
18.8	17.2	16.4	15.9	15.5	15.3	15.2	15.1	15.0	14.9	14.6	13.9	12.5	10.5	8.5	6.5	5.0	3.8	WP309	
18.8	16.9	15.9	14.9	14.1	13.4	13.1	12.7	12.5	12.2	11.9	11.7	11.4	10.8	9.8	8.5	7.3	6.0	WP310	
18.8	17.2	16.4	15.9	15.5	15.3	15.2	15.1	15.0	14.9	14.6	13.9	12.5	11.0	9.8	8.5	7.3	6.0	WP310	
18.8	16.9	15.9	14.9	14.1	13.4	13.1	12.7	12.5	12.2	11.9	11.7	11.1	9.9	7.1	5.0	3.6	2.5	WP310	
18.8	17.2	16.4	15.9	15.5	15.3	15.2	15.1	15.0	14.9	14.6	13.9	12.5	11.0	7.1	5.0	3.6	2.5	WP310	
18.8	16.2	14.6	13.4	12.5	11.8	11.6	11.3	11.2	11.0	10.9	10.8	10.7	10.6	10.5	10.3	9.3	7.4	WP316	A 403
18.8	18.8	18.4	18.1	18.0	17.0	16.7	16.3	16.1	15.9	15.7	15.5	15.4	15.3	14.5	12.4	9.8	7.4	WP316	
18.8	16.2	14.6	13.4	12.5	11.8	11.6	11.3	11.2	11.0	10.9	10.8	10.7	10.6	10.5	10.3	9.3	7.4	WP316H	
18.8	18.8	18.4	18.1	18.0	17.0	16.7	16.3	16.1	15.9	15.7	15.5	15.4	15.3	14.5	12.4	9.8	7.4	WP316H	
15.7	13.3	11.9	10.8	10.0	9.4	9.2	9.0	8.8	8.6	8.4	...	...	...	...	...	...	...	WP316L	A 403
15.7	15.7	15.7	15.5	14.4	13.5	13.2	12.9	12.6	12.4	12.1	...	...	...	...	...	...	...	WP316L	
20.0	19.4	17.8	16.5	15.4	14.6	14.2	13.9	13.6	13.3	13.1	12.8	12.6	12.4	12.2	11.7	9.8	7.4	WP316N	
20.0	10.0	19.2	18.8	18.6	18.6	18.6	18.6	18.5	18.4	18.3	18.1	17.8	17.4	15.8	12.4	9.8	7.4	WP316N	
18.8	16.2	14.6	13.4	12.5	11.8	11.6	11.3	11.2	11.0	10.9	10.8	10.7	10.6	10.5	10.3	9.3	7.4	WP317	A 403
18.8	18.8	18.4	18.1	18.0	17.0	16.7	16.3	16.1	15.9	15.7	15.5	15.4	15.3	14.5	12.4	9.8	7.4	WP317	
18.8	15.9	14.2	12.9	12.0	11.4	11.2	11.0	10.9	10.8	10.7	10.6	10.6	10.4	9.2	6.9	5.0	3.6	WP321	
18.8	18.4	17.3	17.1	17.1	16.4	16.1	15.8	15.7	15.5	15.4	15.3	15.2	13.8	9.6	6.9	5.0	3.6	WP321	
18.8	15.9	14.2	12.9	12.0	11.4	11.2	11.0	10.9	10.8	10.7	10.6	10.6	10.5	10.1	8.8	6.9	5.4	WP321H	
18.8	18.4	17.3	17.1	17.1	16.4	16.1	15.8	15.7	15.5	15.4	15.3	15.2	14.0	11.7	9.1	6.9	5.4	WP321H	

--`,,```,,,,````-`-`,,`,,`,`,,`---

Copyright ASME International
Provided by IHS under license with ASME
No reproduction or networking permitted without license from IHS

Not for Resale

Table A-3 Stainless Steels (Cont'd)

Spec. No.	Type or Grade	Class	UNS Alloy No.	Nominal Composition	P-No.	Notes	Specified Minimum Tensile, ksi	Specified Minimum Yield, ksi	*E* or *F*
Fittings (Seamless and Welded) (Cont'd)									
Austenitic (Cont'd)									
A 403	WP347	...	S34700	18Cr–10Ni–Cb	8	(4)(7)(10)(11)	75	30	1.00
	WP347	...	S34700	18Cr–10Ni–Cb	8	(4)(7)(9)(10)(11)	75	30	1.00
	WP347H	...	S34709	18Cr–10Ni–Cb	8	(4)(7)(11)	75	30	1.00
	WP347H	...	S34709	18Cr–10Ni–Cb	8	(4)(7)(9)(11)	75	30	1.00
A 403	WP348	...	S34800	18Cr–10Ni–Cb	8	(4)(7)(10)(11)	75	30	1.00
	WP348	...	S34800	18Cr–10Ni–Cb	8	(4)(7)(9)(10)(11)	75	30	1.00
	WP348H	...	S34809	18Cr–10Ni–Cb	8	(4)(7)(11)	75	30	1.00
	WP348H	...	S34809	18Cr–10Ni–Cb	8	(4)(7)(9)(11)	75	30	1.00
Castings									
Austenitic									
A 351	CF3	...	J92500	18Cr–8Ni	8	(1)(5)(26)	70	30	0.80
	CF3	...	J92500	18Cr–8Ni	8	(1)(5)(9)(26)	70	30	0.80
	CF3A	...	J92500	18Cr–8Ni	8	(1)(5)(26)	77.5	35	0.80
	CF3A	...	J92500	18Cr–8Ni	8	(1)(5)(9)(26)	77.5	35	0.80
	CF3M	...	J92800	18Cr–12Ni–2Mo	8	(1)(5)(13)(26)	70	30	0.80
	CF3M	...	J92800	18Cr–12Ni–2Mo	8	(1)(5)(9)(13)(26)	70	30	0.80
A 351	CF8	...	J92600	18Cr–8Ni	8	(5)(10)(26)	70	30	0.80
	CF8	...	J92600	18Cr–8Ni	8	(5)(9)(10)(26)	70	30	0.80
	CF8C	...	J92710	18Cr–10Ni–Cb	8	(1)(5)(10)(26)	70	30	0.80
	CF8C	...	J92710	18Cr–10Ni–Cb	8	(1)(5)(9)(10)(26)	70	30	0.80
	CF8M	...	J92900	16Cr–12Ni–2Mo	8	(5)(13)(26)	70	30	0.80
	CF8M	...	J92900	16Cr–12Ni–2Mo	8	(5)(9)(13)(26)	70	30	0.80
A 351	CH8	...	J93400	25Cr–12Ni	8	(1)(5)(10)(26)	65	28	0.80
	CH8	...	J93400	25Cr–12Ni	8	(1)(5)(9)(10)(26)	65	28	0.80
	CH20	...	J93402	25Cr–12Ni	8	(1)(5)(10)(26)	70	30	0.80
	CH20	...	J93402	25Cr–12Ni	8	(1)(5)(9)(10)(26)	70	30	0.80
	CK20	...	J94202	25Cr–20Ni	8	(1)(5)(10)(26)	65	28	0.80
	CK20	...	J94202	25Cr–20Ni	8	(1)(5)(9)(10)(26)	65	28	0.80
Ferritic/Martensitic									
A 217	CA15	...	J91150	13Cr–$\frac{1}{2}$Mo	6	(1)(3)(5)	90	65	0.80
Bolts, Nuts, and Studs									
Austenitic									
A 193	B8	1	S30400	18Cr–8Ni	...	(10)(11)(16)	75	30	...
	B8C	1	S34700	18Cr–10Ni–Cb	...	(10)(11)(16)	75	30	...
	B8M	1	S31600	16Cr–12Ni–2Mo	...	(10)(11)(16)	75	30	...
	B8T	1	S32100	18Cr–10Ni–Ti	...	(10)(11)(16)	75	30	...
A 193	B8	2	S30400	18Cr–8Ni	...	(16)(18)(20)	125	100	...
	B8	2	S30400	18Cr–8Ni	...	(16)(18)(21)	115	80	...
	B8	2	S30400	18Cr–8Ni	...	(16)(18)(22)	105	65	...
	B8	2	S30400	18Cr–8Ni	...	(16)(18)(23)	100	50	...

Copyright ASME International
Provided by IHS under license with ASME
No reproduction or networking permitted without license from IHS Not for Resale

Table A-3 Stainless Steels (Cont'd)

Maximum Allowable Stress Values in Tension, ksi, for Metal Temperature, °F, Not Exceeding																		Type or Grade	Spec. No.
−20 to 100	200	300	400	500	600	650	700	750	800	850	900	950	1,000	1,050	1,100	1,150	1,200		
																		Fittings (Seamless and Welded) (Cont'd) Austenitic (Cont'd)	
18.8	17.3	16.1	15.0	14.1	13.4	13.2	12.9	12.8	12.7	12.7	12.6	12.6	12.5	11.9	9.1	6.1	4.4	WP347	A 403
18.8	17.9	16.4	15.5	14.9	14.7	14.7	14.7	14.7	14.7	14.7	14.7	14.6	14.0	12.1	9.1	6.1	4.4	WP347	
18.8	17.3	16.1	15.0	14.1	13.4	13.2	12.9	12.8	12.8	12.7	12.6	12.6	12.6	12.5	12.1	10.5	7.9	WP347H	
18.8	17.9	16.4	15.5	14.9	14.7	14.7	14.7	14.7	14.7	14.7	14.7	14.6	14.4	14.1	13.0	10.5	7.9	WP347H	
18.8	17.3	16.1	15.0	14.1	13.4	13.2	12.9	12.8	12.7	12.7	12.6	12.6	12.5	11.9	9.1	6.1	4.4	WP348	A 403
18.8	17.9	16.4	15.5	14.9	14.7	14.7	14.7	14.7	14.7	14.7	14.7	14.6	14.0	12.1	9.1	6.1	4.4	WP348	
18.8	17.3	16.1	15.0	14.1	13.4	13.2	12.9	12.8	12.8	12.7	12.6	12.6	12.5	12.5	12.1	10.5	7.9	WP348H	
18.8	17.9	16.4	15.5	14.9	14.7	14.7	14.7	14.7	14.7	14.7	14.7	14.6	14.4	14.1	13.0	10.5	7.9	WP348H	
																		Castings Austenitic	
14.0	12.5	11.2	10.3	9.7	9.1	9.0	8.8	8.6	8.4	...	...	...	...	...	...	...	...	CF3	A 351
14.0	13.3	12.2	12.1	11.8	11.8	11.8	11.8	11.8	11.7	...	...	...	...	...	...	...	...	CF3	
15.5	14.6	13.1	12.1	11.4	10.7	9.9	9.8	...	...	...	...	...	...	...	...	...	...	CF3A	
15.5	14.6	13.5	13.2	13.0	13.0	13.0	11.7	...	...	...	...	...	...	...	...	...	...	CF3A	
14.0	12.9	11.7	10.6	9.9	9.4	9.2	9.0	8.9	8.8	8.7	...	...	...	...	...	...	...	CF3M	
14.0	14.0	13.7	13.4	13.4	13.4	13.3	13.0	12.8	12.6	12.6	...	...	...	...	...	...	...	CF3M	
14.0	12.5	11.2	10.3	9.7	9.1	8.8	8.8	8.6	8.5	8.2	8.1	7.9	7.6	7.2	6.0	4.6	3.6	CF8	A 351
14.0	13.2	12.1	12.0	11.8	11.8	11.8	11.8	11.8	11.7	11.5	11.3	10.7	9.6	7.7	6.0	4.6	3.6	CF8	
14.0	13.3	12.2	11.5	11.1	10.7	10.5	10.3	10.2	10.2	10.1	10.1	10.0	9.5	9.0	8.4	6.4	4.0	CF8C	
14.0	13.3	12.2	11.5	11.1	11.0	11.0	11.0	11.0	11.0	11.0	11.0	10.8	10.6	9.6	8.4	6.4	4.0	CF8C	
14.0	12.9	11.7	10.6	9.9	9.4	9.2	9.0	8.9	8.8	8.7	8.6	8.6	8.5	8.1	7.5	6.4	4.8	CF8M	
14.0	14.0	13.7	13.4	13.4	13.4	13.3	13.0	12.8	12.6	12.6	12.4	12.3	11.9	9.6	7.5	6.4	4.8	CF8M	
13.0	11.9	11.4	11.0	10.6	10.0	9.8	9.5	9.4	9.1	8.9	8.7	8.6	7.9	6.8	5.2	4.0	3.0	CH8	A 351
13.0	11.9	11.4	11.0	10.8	10.6	10.6	10.5	10.4	10.4	10.2	10.0	9.4	8.4	6.8	5.2	4.0	3.0	CH8	
14.0	12.9	12.2	11.8	11.3	10.7	10.5	10.2	10.0	9.8	9.5	9.4	9.0	8.2	6.8	5.2	4.0	3.0	CH20	
14.0	12.9	12.2	11.8	11.6	11.4	11.4	11.3	11.2	11.1	11.0	10.6	10.0	8.4	6.8	5.2	4.0	3.0	CH20	
13.0	11.9	11.4	11.0	10.6	10.0	9.8	9.5	9.4	9.1	8.9	8.7	8.5	8.2	7.8	6.8	5.8	4.8	CK20	
13.0	11.9	11.4	11.0	10.8	10.6	10.6	10.5	10.4	10.4	10.2	10.0	9.5	8.8	7.8	6.8	5.8	4.8	CK20	
																		Ferritic/Martensitic	
18.0	17.2	16.6	16.0	15.4	15.0	14.7	14.5	14.0	13.4	11.9	8.8	6.1	4.0	2.6	1.8	1.2	0.8	CA15	A 217
																		Bolts, Nuts, and Studs Austenitic	
18.8	15.6	14.0	12.9	12.1	11.4	11.2	11.0	10.8	10.5	10.3	10.1	9.9	9.7	9.5	8.8	7.7	6.0	B8	A 193
18.8	17.2	16.0	15.0	14.0	13.4	13.1	12.9	12.8	12.7	12.6	12.6	12.5	12.5	11.9	9.1	6.1	4.4	B8C	
18.8	16.1	14.6	13.3	12.5	11.8	11.5	11.3	11.1	11.0	10.9	10.8	10.7	10.6	10.5	10.3	9.3	7.4	B8M	
18.8	15.9	14.1	12.9	12.0	11.3	11.1	10.9	10.8	10.7	10.6	10.6	10.5	10.4	9.2	6.9	5.0	3.6	B8T	
25.0	...	...	...	...	...	...	...	...	...	...	...	...	...	...	...	...	...	B8	A 193
20.0	...	...	...	...	...	...	...	...	...	...	...	...	...	...	...	...	...	B8	
16.2	...	...	...	...	...	...	...	...	...	...	...	...	...	...	...	...	...	B8	
12.5	...	...	...	...	...	...	...	...	...	...	...	...	...	...	...	...	...	B8	

Copyright ASME International
Provided by IHS under license with ASME
No reproduction or networking permitted without license from IHS
Not for Resale

Table A-3 Stainless Steels (Cont'd)

Spec. No.	Type or Grade	Class	UNS Alloy No.	Nominal Composition	P-No.	Notes	Specified Minimum Tensile, ksi	Specified Minimum Yield, ksi	*E* or *F*
Bolts, Nuts, and Studs (Cont'd)									
Austenitic (Cont'd)									
A 193	B8C	2	S34700	18Cr–10Ni–Cb	...	(16)(18)(20)	125	100	...
	B8C	2	S34700	18Cr–10Ni–Cb	...	(16)(18)(21)	115	80	...
	B8C	2	S34700	18Cr–10Ni–Cb	...	(16)(18)(22)	105	65	...
	B8C	2	S34700	18Cr–10Ni–Cb	...	(16)(18)(23)	100	50	...
A 193	B8M	2	S31600	16Cr–12Ni–2Mo	...	(16)(18)(20)	110	80	...
	B8M	2	S31600	16Cr–12Ni–2Mo	...	(16)(18)(21)	100	80	...
	B8M	2	S31600	16Cr–12Ni–2Mo	...	(16)(18)(22)	95	75	...
	B8M	2	S31600	16Cr–12Ni–2Mo	...	(16)(18)(23)	90	65	...
A 193	B8T	2	S32100	18Cr–10Ni–Ti	...	(16)(18)(20)	125	100	...
	B8T	2	S32100	18Cr–10Ni–Ti	...	(16)(18)(21)	115	80	...
	B8T	2	S32100	18Cr–10Ni–Ti	...	(16)(18)(22)	105	65	...
	B8T	2	S32100	18Cr–10Ni–Ti	...	(16)(18)(23)	100	50	...
A 194	8	...	S30400	18Cr–8Ni	...	(17)	...	...	...
	8C	...	S34700	18Cr–10Ni–Cb	...	(17)	...	...	...
A 194	8M	...	S31600	16Cr–12Ni–Mo	...	(17)	...	...	...
	8T	...	S32100	18Cr–10Ni–Ti	...	(17)	...	...	...
	8F	...	...	18Cr–8Ni–Fm	...	(17)	...	...	...
A 320	B8	1	S30400	18Cr–8Ni	...	(16)(18)	75	30	...
	B8	1	S30400	18Cr–8Ni	...	(16)(28)	75	30	...
	B8	2	S30400	18Cr–8Ni	...	(16)(18)(23)	100	50	...
	B8	2	S30400	18Cr–8Ni	...	(16)(18)(22)	105	65	...
	B8	2	S30400	18Cr–8Ni	...	(16)(18)(21)	115	80	...
	B8	2	S30400	18Cr–8Ni	...	(16)(18)(20)	125	100	...
A 320	B8C	1	S34700	18Cr–10Ni–Cb	...	(16)	75	30	...
	B8C	1	S34700	18Cr–10Ni–Cb	...	(16)(28)	75	30	...
	B8C	2	S34700	18Cr–10Ni–Cb	...	(16)(18)(23)	100	50	...
	B8C	2	S34700	18Cr–10Ni–Cb	...	(16)(18)(22)	105	65	...
	B8C	2	S34700	18Cr–10Ni–Cb	...	(16)(18)(21)	115	80	...
	B8C	2	S34700	18Cr–10Ni–Cb	...	(16)(18)(20)	125	100	...
A 320	B8M	1	S31600	16Cr–12Ni–2Mo	...	(16)	75	30	...
	B8M	1	S31600	16Cr–12Ni–2Mo	...	(16)(28)	75	30	...
	B8M	2	S31600	16Cr–12Ni–2Mo	...	(16)(18)(23)	90	50	...
	B8M	2	S31600	16Cr–12Ni–2Mo	...	(16)(18)(22)	95	65	...
	B8M	2	S31600	16Cr–12Ni–2Mo	...	(16)(18)(21)	100	80	...
	B8M	2	S31600	16Cr–12Ni–2Mo	...	(16)(18)(20)	110	95	...
A 320	B8T	1	S32100	18Cr–10Ni–Ti	...	(16)	75	30	...
	B8T	1	S32100	18Cr–10Ni–Ti	...	(16)(28)	75	30	...
	B8T	2	S32100	18Cr–10Ni–Ti	...	(16)(18)(23)	100	50	...
	B8T	2	S32100	18Cr–10Ni–Ti	...	(16)(18)(22)	105	65	...
	B8T	2	S32100	18Cr–10Ni–Ti	...	(16)(18)(21)	115	80	...
	B8T	2	S32100	18Cr–10Ni–Ti	...	(16)(18)(20)	125	100	...

--`,,```,,,,````-`-`,,`,,`,`,,`---
Copyright ASME International
Provided by IHS under license with ASME
No reproduction or networking permitted without license from IHS
Not for Resale

Table A-3 Stainless Steels (Cont'd)

Maximum Allowable Stress Values in Tension, ksi, for Metal Temperature, °F, Not Exceeding																		Type or Grade	Spec. No.
−20 to 100	200	300	400	500	600	650	700	750	800	850	900	950	1,000	1,050	1,100	1,150	1,200		
																		Bolts, Nuts, and Studs (Cont'd) Austenitic (Cont'd)	
25.0	...	...	...	...	...	...	...	...	...	...	...	...	...	...	...	...	...	B8C	A 193
20.0	...	...	...	...	...	...	...	...	...	...	...	...	...	...	...	...	...	B8C	
16.2	...	...	...	...	...	...	...	...	...	...	...	...	...	...	...	...	...	B8C	
12.5	...	...	...	...	...	...	...	...	...	...	...	...	...	...	...	...	...	B8C	
22.0	22.0	22.0	22.0	22.0	22.0	22.0	22.0	22.0	...	...	...	...	...	...	...	...	...	B8M	A 193
20.0	20.0	20.0	20.0	20.0	20.0	20.0	20.0	20.0	...	...	...	...	...	...	...	...	...	B8M	
18.8	16.2	16.2	16.2	16.2	16.2	16.2	16.2	16.2	...	...	...	...	...	...	...	...	...	B8M	
18.8	16.1	14.6	13.3	12.5	12.5	12.5	12.5	12.5	...	...	...	...	...	...	...	...	...	B8M	
25.0	...	...	...	...	...	...	...	...	...	...	...	...	...	...	...	...	...	B8T	A 193
20.0	...	...	...	...	...	...	...	...	...	...	...	...	...	...	...	...	...	B8T	
16.2	...	...	...	...	...	...	...	...	...	...	...	...	...	...	...	...	...	B8T	
12.5	...	...	...	...	...	...	...	...	...	...	...	...	...	...	...	...	...	B8T	
...	...	...	...	...	...	...	...	...	...	...	...	...	...	...	...	...	...	8	A 194
...	...	...	...	...	...	...	...	...	...	...	...	...	...	...	...	...	...	8C	
...	...	...	...	...	...	...	...	...	...	...	...	...	...	...	...	...	...	8M	A 194
...	...	...	...	...	...	...	...	...	...	...	...	...	...	...	...	...	...	8T	
...	...	...	...	...	...	...	...	...	...	...	...	...	...	...	...	...	...	8F	
18.8	...	...	...	...	...	...	...	...	...	...	...	...	...	...	...	...	...	B8	A 320
18.8	16.7	15.0	13.8	...	...	...	...	...	...	...	...	...	...	...	...	...	...	B8	
18.8	...	...	...	...	...	...	...	...	...	...	...	...	...	...	...	...	...	B8	
18.8	...	...	...	...	...	...	...	...	...	...	...	...	...	...	...	...	...	B8	
20.0	...	...	...	...	...	...	...	...	...	...	...	...	...	...	...	...	...	B8	
25.0	...	...	...	...	...	...	...	...	...	...	...	...	...	...	...	...	...	B8	
18.8	...	...	...	...	...	...	...	...	...	...	...	...	...	...	...	...	...	B8C	A 320
18.8	17.9	16.4	15.5	...	...	...	...	...	...	...	...	...	...	...	...	...	...	B8C	
18.8	...	...	...	...	...	...	...	...	...	...	...	...	...	...	...	...	...	B8C	
18.8	...	...	...	...	...	...	...	...	...	...	...	...	...	...	...	...	...	B8C	
20.0	...	...	...	...	...	...	...	...	...	...	...	...	...	...	...	...	...	B8C	
25.0	...	...	...	...	...	...	...	...	...	...	...	...	...	...	...	...	...	B8C	
18.8	...	...	...	...	...	...	...	...	...	...	...	...	...	...	...	...	...	B8M	A 320
18.8	17.7	15.6	14.3	...	...	...	...	...	...	...	...	...	...	...	...	...	...	B8M	
18.8	...	...	...	...	...	...	...	...	...	...	...	...	...	...	...	...	...	B8M	
18.8	...	...	...	...	...	...	...	...	...	...	...	...	...	...	...	...	...	B8M	
20.0	...	...	...	...	...	...	...	...	...	...	...	...	...	...	...	...	...	B8M	
22.5	...	...	...	...	...	...	...	...	...	...	...	...	...	...	...	...	...	B8M	
18.8	...	...	...	...	...	...	...	...	...	...	...	...	...	...	...	...	...	B8T	A 320
18.8	17.8	16.5	15.3	...	...	...	...	...	...	...	...	...	...	...	...	...	...	B8T	
18.8	...	...	...	...	...	...	...	...	...	...	...	...	...	...	...	...	...	B8T	
18.8	...	...	...	...	...	...	...	...	...	...	...	...	...	...	...	...	...	B8T	
20.0	...	...	...	...	...	...	...	...	...	...	...	...	...	...	...	...	...	B8T	
25.0	...	...	...	...	...	...	...	...	...	...	...	...	...	...	...	...	...	B8T	

Copyright ASME International
Provided by IHS under license with ASME
No reproduction or networking permitted without license from IHS
Not for Resale

Table A-3 Stainless Steels (Cont'd)

Spec. No.	Type or Grade	Class	UNS Alloy No.	Nominal Composition	P-No.	Notes	Specified Minimum Tensile, ksi	Specified Minimum Yield, ksi	*E* or *F*
Bolts, Nuts, and Studs (Cont'd)									
Austenitic (Cont'd)									
A 453	660	A & B	S66286	15Cr–25Ni–Mo–Ti–V–B	...	(16)	130	85	...
A 479	TP309H	...	S30909	23Cr–12Ni	8	(9)	75	30	...
	TP309H	...	S30909	23Cr–12Ni	8	...	75	30	...
	TP310H	...	S31009	25Cr–20Ni	8	(9)	75	30	...
	TP310H	...	S31009	25Cr–20Ni	8	...	75	30	...
A 564	630	H-1100	S17400	17Cr–4Ni–3.5Cu–0.04P	...	(16)(24)	140	115	...
Ferritic/Martensitic									
A 193	B6	(410)	S41000	13Cr	...	(16)(19)	110	85	...
A 194	6	...	S41000	13Cr	...	(17)	...	...	...
Bar									
Austenitic									
A 479	TP304	...	S30400	18Cr–8Ni	8	(10)	75	30	1.00
	TP304	...	S30400	18Cr–8Ni	8	(9)(10)	75	30	1.00
	TP304H	...	S30409	18Cr–8Ni	8	...	75	30	1.00
	TP304H	...	S30409	18Cr–8Ni	8	(9)	75	30	1.00
A 479	TP304L	...	S30403	18Cr–8Ni	8	(25)	70	25	1.00
	TP304L	...	S30403	18Cr–8Ni	8	(9)(25)	70	25	1.00
	TP304N	...	S30451	18Cr–8Ni–N	8	(10)	80	35	1.00
	TP304N	...	S30451	18Cr–8Ni–N	8	(9)(10)	80	35	1.00
A 479	...	...	S30815	21Cr–11Ni–N	8	(1)	87	45	1.00
	...	...	S30815	21Cr–11Ni–N	8	(1)(9)	87	45	1.00
A 479	TP310S	...	S31008	25Cr–20Ni	8	(10)(11)(15)	75	30	1.00
	TP310S	...	S31008	25Cr–20Ni	8	(10)(11)(14)	75	30	1.00
	TP310S	...	S31008	25Cr–20Ni	8	(9)(10)(11)	75	30	1.00
A 479	TP316	...	S31600	16Cr–12Ni–2Mo	8	(10)	75	30	1.00
	TP316	...	S31600	16Cr–12Ni–2Mo	8	(9)(10)	75	30	1.00
	TP316H	...	S31609	16Cr–12Ni–2Mo	8	...	75	30	1.00
	TP316H	...	S31609	16Cr–12Ni–2Mo	8	(9)	75	30	1.00
A 479	TP316L	...	S31603	16Cr–12Ni–2Mo	8	(25)	70	25	1.00
	TP316L	...	S31603	16Cr–12Ni–2Mo	8	(9)(25)	70	25	1.00
	TP316N	...	S31651	16Cr–12Ni–2Mo	8	(10)	80	35	1.00
	TP316N	...	S31651	16Cr–12Ni–2Mo	8	(9)(10)	80	35	1.00
A 479	TP321	...	S32100	18Cr–10Ni–Ti	8	(10)	75	30	1.00
	TP321	...	S32100	18Cr–10Ni–Ti	8	(9)(10)	75	30	1.00
	TP321H	...	S32109	18Cr–10Ni–Ti	8	...	75	30	1.00
	TP321H	...	S32109	18Cr–10Ni–Ti	8	(9)	75	30	1.00

Copyright ASME International
Provided by IHS under license with ASME
No reproduction or networking permitted without license from IHS Not for Resale

Table A-3 Stainless Steels (Cont'd)

Maximum Allowable Stress Values in Tension, ksi, for Metal Temperature, °F, Not Exceeding																		Type or Grade	Spec. No.
−20 to 100	200	300	400	500	600	650	700	750	800	850	900	950	1,000	1,050	1,100	1,150	1,200		
																		Bolts, Nuts, and Studs (Cont'd) Austenitic (Cont'd)	
...	...	...	...	...	...	...	...	...	...	...	...	...	...	...	...	...	...	660	A 453
18.8	18.8	18.7	18.3	17.9	17.5	17.3	17.1	16.8	16.5	16.1	15.6	15.1	13.8	10.3	7.6	5.5	4.0	TP309H	A 479
18.8	17.6	16.1	15.1	14.1	13.8	13.7	13.5	13.3	13.1	12.9	12.7	12.5	12.3	10.3	7.6	5.5	4.0	TP309H	
18.8	18.4	17.6	17.4	17.4	17.4	17.4	17.4	17.2	17.0	16.7	16.3	15.9	13.8	10.3	7.6	5.5	4.0	TP310H	
18.8	17.6	16.1	15.1	14.3	13.7	13.5	13.3	13.1	12.9	12.7	12.5	12.3	12.1	10.3	7.6	5.5	4.0	TP310H	
...	...	...	...	...	...	...	...	...	...	...	...	...	...	...	...	...	...	630	A 564
																		Ferritic/Martensitic	
21.2	21.2	21.2	21.2	21.2	21.2	21.2	21.2	21.2	19.5	15.6	12.0	...	...	...	...	...	...	B6	A 193
...	...	...	...	...	...	...	...	...	...	...	...	...	...	...	...	...	...	6	A 194
																		Bar Austenitic	
18.8	15.7	14.1	13.0	12.2	11.4	11.3	11.1	10.8	10.6	10.4	10.2	10.0	9.8	9.5	8.9	7.7	6.1	TP304	A 479
18.8	17.8	16.6	16.2	15.9	15.9	15.9	15.9	15.6	15.2	14.9	14.7	14.4	13.8	12.2	9.8	7.7	6.1	TP304	
18.8	15.7	14.1	13.0	12.2	11.4	11.3	11.1	10.8	10.6	10.4	10.2	10.0	9.8	9.5	8.9	7.7	6.1	TP304H	
18.8	17.8	16.6	16.2	15.9	15.9	15.9	15.9	15.6	15.2	14.9	14.7	14.4	13.8	12.2	9.8	7.7	6.1	TP304H	
16.3	14.3	12.8	11.7	10.9	10.3	10.1	10.0	9.8	9.7	...	...	...	...	...	...	...	...	TP304L	A 479
16.7	16.5	15.3	14.7	14.4	14.0	13.7	13.5	13.3	13.0	...	...	...	...	...	...	...	...	TP304L	
20.0	17.9	15.7	14.1	13.0	12.4	12.2	11.9	11.8	11.6	11.3	11.1	10.8	10.6	10.3	9.8	7.7	6.1	TP304N	
20.0	20.0	19.0	18.3	17.8	17.4	17.3	17.2	16.9	16.7	16.3	15.9	15.6	15.0	12.4	9.8	7.7	6.1	TP304N	
24.9	24.7	22.0	19.9	18.5	17.7	17.4	17.2	17.0	16.8	16.6	16.4	16.2	14.9	11.6	9.0	6.9	5.2	...	A 479
24.9	24.7	23.3	22.4	21.8	21.4	21.2	21.0	20.8	20.6	20.3	20.0	19.1	14.9	11.6	9.0	6.9	5.2	...	
18.8	16.9	15.8	14.9	14.1	13.4	13.0	12.7	12.5	12.1	11.9	11.6	11.1	9.8	...	...	...	...	TP310S	A 479
18.8	16.9	15.8	14.9	14.1	13.4	13.0	12.7	12.5	12.1	11.9	11.6	11.3	10.8	...	...	...	...	TP310S	
18.8	17.2	16.4	15.8	15.5	15.3	15.2	15.1	15.0	14.9	14.6	13.8	12.6	11.0	...	...	...	...	TP310S	
18.8	16.2	14.6	13.4	12.5	11.8	11.6	11.3	11.2	11.0	10.9	10.8	10.7	10.6	10.5	10.3	9.3	7.4	TP316	A 479
18.8	18.8	18.4	18.1	18.0	17.0	16.7	16.3	16.1	15.9	15.7	15.6	15.4	15.3	14.5	12.4	9.8	7.4	TP316	
18.8	16.2	14.6	13.4	12.5	11.8	11.6	11.3	11.2	11.0	10.9	10.8	10.7	10.6	10.5	10.3	9.3	7.4	TP316H	
18.8	18.8	18.4	18.1	18.0	17.0	16.7	16.3	16.1	15.9	15.7	15.6	15.4	15.3	14.5	12.4	9.8	7.4	TP316H	
16.7	14.1	12.7	11.7	10.9	10.4	10.2	10.0	9.8	9.6	9.4	...	...	...	...	...	...	...	TP316L	A 479
16.7	16.7	16.0	15.6	14.8	14.0	13.8	13.5	13.2	13.0	12.7	...	...	...	...	...	...	...	TP316L	
20.0	19.4	17.8	16.5	15.4	14.6	14.2	13.9	13.6	13.3	13.1	12.8	12.6	12.4	12.2	11.7	9.8	7.4	TP316N	
20.0	20.0	19.2	18.8	18.6	18.6	18.6	18.6	18.5	18.4	18.3	18.1	17.8	17.4	15.8	12.4	9.8	7.4	TP316N	
18.8	15.9	14.2	12.9	12.0	11.4	11.2	11.0	10.9	10.8	10.7	10.6	10.6	10.4	9.2	6.9	5.0	3.6	TP321	A 479
18.8	18.4	17.3	17.1	17.1	16.4	16.1	15.8	15.7	15.5	15.4	15.3	15.2	13.8	9.6	6.9	5.0	3.6	TP321	
18.8	15.9	14.2	12.9	12.0	11.4	11.2	11.0	10.9	10.8	10.7	10.6	10.6	10.5	10.1	8.8	6.9	5.4	TP321H	
18.8	18.4	17.3	17.1	17.1	16.4	16.1	15.8	15.7	15.5	15.4	15.3	15.2	14.0	11.7	9.1	6.9	5.4	TP321H	

Copyright ASME International
Provided by IHS under license with ASME
No reproduction or networking permitted without license from IHS
Not for Resale

Table A-3 Stainless Steels (Cont'd)

Spec. No.	Type or Grade	Class	UNS Alloy No.	Nominal Composition	P-No.	Notes	Specified Minimum Tensile, ksi	Specified Minimum Yield, ksi	*E* or *F*
Bar (Cont'd)									
Austenitic (Cont'd)									
A 479	TP347	...	S34700	18Cr–10Ni–Cb	8	(10)	75	30	1.00
	TP347	...	S34700	18Cr–10Ni–Cb	8	(9)(10)	75	30	1.00
	TP347H	...	S34709	18Cr–10Ni–Cb	8	...	75	30	1.00
	TP347H	...	S34709	18Cr–10Ni–Cb	8	(9)	75	30	1.00
A 479	TP348	...	S34800	18Cr–10Ni–Cb	8	(10)	75	30	1.00
	TP348	...	S34800	18Cr–10Ni–Cb	8	(9)(10)	75	30	1.00
	TP348H	...	S34809	18Cr–10Ni–Cb	8	...	75	30	1.00
	TP348H	...	S34809	18Cr–10Ni–Cb	8	(9)	75	30	1.00
Ferritic/Martensitic									
A 479	TPXM-27	...	S44627	27Cr–1Mo	10I	(2)	65	40	1.00

GENERAL NOTES:

(a) The tabulated specifications are ANSI/ASTM or ASTM. For ASME Boiler and Pressure Vessel Code applications, see related specifications in Section II of the ASME Code.

(b) The stress values in this Table may be interpolated to determine values for intermediate temperatures.

(c) The P-Numbers indicated in this Table are identical to those adopted by the ASME Boiler and Pressure Vessel Code. Qualification of welding procedures, welders, and welding operators is required and shall comply with the ASME Boiler and Pressure Vessel Code, Section IX, except as modified by para. 127.5.

(d) Tensile strengths and allowable stresses shown in "ksi" are "thousands of pounds per square inch."

(e) The materials listed in this Table shall not be used at design temperatures above those for which allowable stress values are given.

(f) The tabulated stress values are $S \times E$ (weld joint efficiency factor) or $S \times F$ (material quality factor), as applicable. Weld joint efficiency factors are shown in Table 102.4.3.

(g) Pressure-temperature ratings of piping components, as published in standards referenced in this Code, may be used for components meeting the requirements of those standards. The allowable stress values given in this Table are for use in designing piping components which are not manufactured in accordance with referenced standards.

NOTES:

(1) THIS MATERIAL IS NOT ACCEPTABLE FOR USE ON BOILER EXTERNAL PIPING — SEE FIGS. 100.1.2(A) AND (B).

(2) Use of this material at temperatures above 650°F is not approved because of the possibility of temper embrittlement.

(3) This steel may be expected to develop embrittlement at room temperature after service at temperatures above 700°F. Consequently, its use at higher temperatures is not recommended unless due caution is observed.

(4) For fittings made from A 182 forgings over 5 in. in thickness, the allowable stress values tabulated shall be reduced by the ratio of 70 divided by 75.

(5) The material quality factors and allowable stress values for these materials may be increased in accordance with para. 102.4.6.

(6) Tensile strengths in parentheses are expected minimum values.

(7) See MSS SP-43 for requirements for lightweight stainless steel fittings. MSS SP-43 Schedule 5S fittings shall not be used for design temperatures above 400°F. MSS SP-43 Schedule 10S fittings shall not be used for design temperatures above 750°F.

(8) The material quality factor for centrifugally cast pipe (0.85) is based on all surfaces being machined after heat treatment. The surface finish, after machining, shall be 250 μin. arithmetic average deviation or smoother.

(9) Due to relatively low yield strength of these materials, these higher allowable stress values were established at temperatures where the short time tensile properties govern to permit the use of these alloys where slightly greater deformation is acceptable. These stress values exceed 67% but do not exceed 90% of the yield strength at temperature. Use of these stress values may result in dimensional changes due to permanent strain. These values should not be used for the flanges of gasketed joints or other applications where slight amounts of distortion can cause leakage or malfunction.

(10) The allowable stress values tabulated for temperatures over 1000°F apply only if the carbon content of the material is 0.04% or higher.

(11) The allowable stress values tabulated for temperatures over 1000°F apply only if the material is heat treated by heating to a minimum temperature of 1900°F and quenching in water or rapidly cooling by other means.

(12) These allowable stress values apply to forgings over 5 in. in thickness.

Copyright ASME International
Provided by IHS under license with ASME
No reproduction or networking permitted without license from IHS Not for Resale

Table A-3 Stainless Steels (Cont'd)

Maximum Allowable Stress Values in Tension, ksi, for Metal Temperature, °F, Not Exceeding																		Type or Grade	Spec. No.
−20 to 100	200	300	400	500	600	650	700	750	800	850	900	950	1,000	1,050	1,100	1,150	1,200		
																			Bar (Cont'd)
																			Austenitic (Cont'd)
18.8	17.3	16.1	15.0	14.1	13.4	13.2	12.9	12.8	12.7	12.7	12.6	12.6	12.5	11.9	9.1	6.1	4.4	TP347	A 479
18.8	17.9	16.4	15.5	14.9	14.7	14.7	14.7	14.7	14.7	14.7	14.7	14.6	14.0	12.1	9.1	6.1	4.4	TP347	
18.8	17.3	16.1	15.0	14.1	13.4	13.2	12.8	12.8	12.7	12.7	12.6	12.6	12.6	12.5	12.1	10.5	7.9	TP347H	
18.8	17.9	16.4	15.5	14.9	14.7	14.7	14.7	14.7	14.7	14.7	14.7	14.6	14.4	14.1	13.0	10.5	7.9	TP347H	
18.8	17.3	16.1	15.0	14.1	13.4	13.2	12.9	12.8	12.7	12.7	12.6	12.6	12.5	11.9	9.1	6.1	4.4	TP348	A 479
18.8	17.9	16.4	15.5	14.9	14.7	14.7	14.7	14.7	14.7	14.7	14.7	14.6	14.0	12.1	9.1	6.1	4.4	TP348	
18.8	17.3	16.1	15.0	14.1	13.4	13.2	12.8	12.8	12.7	12.7	12.6	12.6	12.6	12.5	12.1	10.5	7.9	TP348H	
18.8	17.9	16.4	15.5	14.9	14.7	14.7	14.7	14.7	14.7	14.7	14.7	14.6	14.4	14.1	13.0	10.5	7.9	TP348H	
																			Ferritic/Martensitic
16.2	16.2	15.9	15.9	15.9	15.9	15.9	...	...	...	...	...	...	...	...	...	...	...	TPXM-27	A 479

NOTES (Cont'd):

(13) The allowable stress values tabulated for temperatures over 800°F apply only if the carbon content of the material is 0.04% or higher.

(14) These allowable stress values shall be used only when the grain size of the material is ASTM No. 6 or coarser.

(15) These allowable stress values shall be used when the grain size of the material is finer than ASTM No. 6 or when the grain size has not been determined.

(16) These stress values are established from a consideration of strength only and will be satisfactory for average service. For bolted joints, where freedom from leakage over a long period of time without retightening is required, lower stress values may be necessary as determined from the relative flexibility of the flange and bolts and corresponding relaxation properties.

(17) This is a product specification. Allowable stress values are not necessary. Limitations on metal temperature for materials covered by this specification for use under B31.1 are:

Grade 6 and 8F	−20°F to 800°F
Grades 8, 8C, 8M, & 8T	−20°F to 1,200°F

(18) The hardness of this material, under the thread roots, shall not exceed Rockwell C35. The hardness shall be measured on a flat area, at least $\frac{1}{8}$ in. across, prepared by removing thread. No more material than necessary shall be removed to prepare the flat area. Hardness measurements shall be made at the same frequency as tensile test.

(19) These allowable stress values apply to bolting materials 4 in. in diameter and smaller.

(20) These allowable stress values apply to bolting materials $\frac{3}{4}$ in. in diameter and smaller.

(21) These allowable stress values apply to bolting materials larger than $\frac{3}{4}$ in. but not larger than 1 in. in diameter.

(22) These allowable stress values apply to bolting materials larger than 1 in. but not larger than $1\frac{1}{4}$ in. in diameter.

(23) These allowable stress values apply to bolting materials larger than $1\frac{1}{4}$ in. but not larger than $1\frac{1}{2}$ in. in diameter.

(24) These allowable stress values apply to bolting materials 8 in. in diameter and smaller.

(25) Use of external pressure charts for material in the form of barstock is permitted for stiffening rings only.

(26) At the ferrite levels tabulated below, these materials will have significant reductions in Charpy V-notch toughness values at room temperature and below following service exposure at the indicated temperatures. This reduction indicates the potential for brittle fracture with high rate loading in the presence of sharp notches or cracks.

Ferrite Content	Service Temperature
5% and less	1,100°F and above
10%	900°F and above
15%	800°F and above
20%	700°F and above
25%–30%	600°F and above
35%–40%	500°F and above

(27) The stress values at 1,050°F and above shall be used only when the grain size is ASTM No. 6 or coarser.

(28) These allowable stress values apply to material that has been carbide solution treated.

(29) These allowable stress values apply for single or double butt welded pipe with radiography per para. 136.4.5.

(30) These allowable stress values apply for double butt welded pipe.

(31) These allowable stress values apply for single butt welded pipe.

(32) This material is one of the highest tensile strength materials approved for use in ASME pressure component applications and little fatigue data is available for it in the ASME database. Therefore, the designer shall consider this when calculating the allowable stress range for expansion stresses and provide appropriate design margins.

Copyright ASME International
Provided by IHS under license with ASME
No reproduction or networking permitted without license from IHS
Not for Resale

Table A-4 Nickel and High Nickel Alloys

Spec. No.	UNS Alloy No.	Temper or Condition	Nominal Composition	P-No.	Notes	Specified Minimum Tensile, ksi	Specified Minimum Yield, ksi	*E* or *F*
Seamless Pipe and Tube								
B 161	N02200	Annealed	Ni	41	(1)(5)	55	15	1.00
	N02200	Annealed	Ni	41	(1)(6)	55	12	1.00
	N02200	Str. rel.	Ni	41	(1)	65	40	1.00
B 161	N02201	Annealed	Ni–LC	41	(1)(5)	50	12	1.00
	N02201	Annealed	Ni–LC	41	(1)(6)	50	10	1.00
	N02201	Str. Rel.	Ni–LC	41	(1)	60	30	1.00
B 163	N08800	Annealed	Ni–Cr–Fe	45	(1)(7)	75	30	1.00
	N08800	Annealed	Ni–Cr–Fe	45	(1)(2)(7)	75	30	1.00
	N08810	Annealed	Ni–Cr–Fe	45	(1)	65	25	1.00
	N08810	Annealed	Ni–Cr–Fe	45	(1)(2)	65	25	1.00
B 165	N04400	Annealed	Ni–Cu	42	(1)(5)	70	28	1.00
	N04400	Annealed	Ni–Cu	42	(1)(6)	70	25	1.00
	N04400	Str. rel.	Ni–Cu	42	(1)(2)(3)	85	35	1.00
B 167	N06600	H.F./Ann.	Ni–Cr–Fe	43	(1)(5)	80	30	1.00
	N06600	H.F./Ann.	Ni–Cr–Fe	43	(1)(2)(5)	75	30	1.00
	N06600	H.F./Ann.	Ni–Cr–Fe	43	(1)(6)	75	25	1.00
	N06600	H.F./Ann.	Ni–Cr–Fe	43	(1)(2)(6)	80	25	1.00
B 167	N06600	C.D./Ann.	Ni–Cr–Fe	43	(1)(5)	80	35	1.00
	N06600	C.D./Ann.	Ni–Cr–Fe	43	(1)(2)(5)	80	35	1.00
	N06600	C.D./Ann.	Ni–Cr–Fe	43	(1)(6)	80	30	1.00
	N06600	C.D./Ann.	Ni–Cr–Fe	43	(1)(2)(6)	80	30	1.00
B 407	N08800	C.D./Ann.	Ni–Cr–Fe	45	(7)	75	30	1.00
	N08800	C.D./Ann.	Ni–Cr–Fe	45	(2)(7)	75	30	1.00
	N08810	Annealed	Ni–Cr–Fe	45	(7)	65	25	1.00
	N08810	Annealed	Ni–Cr–Fe	45	(2)(7)	65	25	1.00
B 423	N08825	C.W./Ann.	Ni–Fe–Cr–Mo–Cu	45	(1)(7)	85	35	1.00
	N08825	C.W./Ann.	Ni–Fe–Cr–Mo–Cu	45	(1)(2)(7)	85	35	1.00
B 622	N06022	Sol. Ann.	Ni–Mo–Cr–LC	44	(1)(12)(13)	100	...	1.00
	N06022	Sol. Ann.	Ni–Mo–Cr–LC	44	(1)(2)(12)(13)	100	...	1.00
	N10276	Sol.Ann.	LC–Ni–Mo–Cr	44	(1)(12)	100	41	1.00
	N10276	Sol.Ann.	LC–Ni–Mo–Cr	44	(1)(2)(12)	100	41	1.00
B 677	N08925	Annealed	Ni–Fe–Cr–Mo–Cu–LC	45	(1)	87	...	1.00
	N08926	Annealed	Ni–Fe–Cr–Mo–Cu–N–LC	...	(1)	94	...	1.00
	N08926	Annealed	Ni–Fe–Cr–Mo–Cu–N–LC	...	(1)(2}	94	...	1.00
B 690	N08367	Annealed	Ni–Fe–Cr–Mo	45	(1)(8)(13)	104	46	1.00
	N08367	Annealed	Ni–Fe–Cr–Mo	45	(1)(2)(8)(13)	104	46	1.00
B 729	N08020	Annealed	Ni–Fe–Cr–Mo–Cu–Cb	45	(1)	80	35	1.00
	N08020	Annealed	Ni–Fe–Cr–Mo–Cu–Cb	45	(1)(2)	80	35	1.00

Copyright ASME International
Provided by IHS under license with ASME
No reproduction or networking permitted without license from IHS
Not for Resale

Table A-4 Nickel and High Nickel Alloys

Maximum Allowable Stress Values in Tension, ksi, for Metal Temperature, ° F, Not Exceeding																		UNS Alloy No.	Spec. No.
−20 to 100	200	300	400	500	600	650	700	750	800	850	900	950	1,000	1,050	1,100	1,150	1,200		
																			Seamless Pipe and Tube
10.0	10.0	10.0	10.0	10.0	10.0	...	...	...	...	...	...	...	...	...	...	...	...	N02200	B 161
8.0	8.0	8.0	8.0	8.0	8.0	...	...	...	...	...	...	...	...	...	...	...	...	N02200	
16.3	16.3	16.3	16.3	16.0	15.4	...	...	...	...	...	...	...	...	...	...	...	...	N02200	
8.0	7.7	7.5	7.5	7.5	7.5	7.5	7.4	7.3	7.2	5.8	4.5	3.7	3.0	2.4	2.0	1.5	1.2	N02200	B 161
6.7	6.4	6.3	6.2	6.2	6.2	6.2	6.2	6.0	5.9	5.8	4.5	3.7	3.0	2.4	2.0	1.5	1.2	N02200	
15.0	15.0	15.0	15.8	14.7	14.2	...	...	...	...	...	...	...	...	...	...	...	...	N02200	
18.7	18.7	17.9	17.2	16.7	16.3	16.1	15.9	15.7	15.5	15.3	15.1	14.9	14.7	14.5	13.0	9.8	6.6	N08800	B 163
18.7	18.7	18.7	18.7	18.7	18.7	18.6	18.6	18.5	18.5	18.3	18.2	17.9	17.6	17.0	13.0	9.8	6.6	N08800	
16.2	15.4	14.5	13.5	12.9	12.2	11.9	11.7	11.4	11.1	10.9	10.7	10.5	10.3	10.1	10.0	9.3	7.4	N08810	
16.2	16.2	16.2	16.2	16.0	16.0	16.0	15.7	15.4	15.3	15.1	14.8	14.6	14.4	13.7	11.6	9.3	7.4	N08810	
17.5	16.4	15.4	14.8	14.7	14.7	14.7	14.7	14.6	14.2	11.0	8.0	...	...	...	...	...	...	N04400	B 165
16.6	14.6	13.6	13.2	13.1	13.1	13.1	13.1	13.0	12.7	11.0	8.0	...	...	...	...	...	...	N04400	
21.2	21.2	21.2	21.1	21.0	...	...	...	...	...	...	...	...	...	...	...	...	...	N04400	
20.0	19.1	18.2	17.5	16.9	16.1	16.0	15.6	15.5	15.3	15.0	14.9	10.6	7.0	4.5	3.0	2.2	2.0	N06600	B 167
20.0	20.0	20.0	20.0	20.0	20.0	20.0	20.0	20.0	20.0	19.6	16.0	10.6	7.0	4.5	3.0	2.2	2.0	N06600	
16.7	15.3	14.5	14.0	13.6	13.2	13.1	13.0	12.9	12.7	12.3	11.8	10.6	7.0	4.5	3.0	2.2	2.0	N06600	
16.7	16.7	16.7	16.7	16.7	16.7	16.7	16.7	16.7	16.7	16.5	15.9	15.9	7.0	4.5	3.0	2.2	2.0	N06600	
20.0	20.0	20.0	20.0	20.0	20.0	19.8	19.6	19.4	19.1	18.7	16.0	10.6	7.0	4.5	3.0	2.2	2.0	N06600	B 167
20.0	20.0	20.0	20.0	20.0	20.0	20.0	20.0	20.0	20.0	20.0	16.0	10.6	7.0	4.5	3.0	2.2	2.0	N06600	
20.0	19.1	18.2	17.5	16.9	16.1	16.0	15.6	15.5	15.3	15.0	14.9	10.6	7.0	4.5	3.0	2.2	2.0	N06600	
20.0	20.0	20.0	20.0	20.0	20.0	20.0	20.0	20.0	20.0	19.6	16.0	10.6	7.0	4.5	3.0	2.2	2.0	N06600	
18.7	18.7	17.9	17.2	16.7	16.3	16.1	15.9	15.7	15.5	15.3	15.1	14.9	14.7	14.5	13.0	9.8	6.6	N08800	B 407
18.7	18.7	18.7	18.7	18.7	18.7	18.6	18.6	18.5	18.5	18.3	18.2	17.9	17.6	17.0	13.0	9.8	6.6	N08800	
16.2	15.4	14.5	13.5	12.9	12.2	11.9	11.7	11.4	11.1	10.9	10.7	10.5	10.3	10.1	10.0	9.3	7.4	N08810	
16.2	16.2	16.2	16.2	16.0	16.0	16.0	15.7	15.4	15.3	15.1	14.8	14.6	14.4	13.7	11.6	9.3	7.4	N08810	
21.2	21.2	20.4	19.2	18.3	17.8	17.6	17.3	17.2	17.1	...	...	...	...	...	...	...	...	N08825	B 423
21.2	21.2	21.2	21.2	21.2	21.2	21.1	21.0	20.9	20.8	...	...	...	...	...	...	...	...	N08825	
25.0	25.0	24.5	22.7	21.2	20.1	19.6	19.2	18.9	18.6	...	...	...	...	...	...	...	...	N06022	B 622
25.0	25.0	24.8	23.9	23.2	22.7	22.6	22.4	22.3	22.2	...	...	...	...	...	...	...	...	N06022	
25.0	25.0	23.0	21.2	20.0	18.8	18.3	17.8	17.4	17.1	16.8	16.6	16.5	16.5	...	...	...	...	N10276	
25.0	25.0	25.0	24.3	23.9	23.5	23.3	23.1	22.9	22.8	22.6	22.3	22.1	21.8	...	...	...	...	N10276	
21.7	21.7	20.9	19.6	18.3	17.3	16.9	16.9	16.9	16.9	...	...	...	...	...	...	...	...	N08925	B 677
23.5	23.5	21.3	19.9	18.7	17.9	17.7	17.6	17.5	...	...	...	...	...	...	...	...	...	N08926	
23.5	23.5	22.9	21.8	20.8	20.0	19.6	19.3	19.2	...	...	...	...	...	...	...	...	...	N08926	
26.0	26.0	24.2	22.7	20.9	19.9	19.3	19.0	18.7	18.4	...	...	...	...	...	...	...	...	N08367	B 690
26.2	26.0	24.6	23.5	22.9	22.3	22.1	21.9	21.8	21.7	...	...	...	...	...	...	...	...	N08367	
20.0	20.0	19.8	18.7	18.2	17.7	17.5	17.3	17.1	16.8	...	...	...	...	...	...	...	...	N08020	B 729
20.0	20.0	19.8	19.4	19.3	19.3	19.2	19.2	19.2	19.1	...	...	...	...	...	...	...	...	N08020	

Copyright ASME International
Provided by IHS under license with ASME
No reproduction or networking permitted without license from IHS
Not for Resale

Table A-4 Nickel and High Nickel Alloys (Cont'd)

Spec. No.	UNS Alloy No.	Temper or Condition	Nominal Composition	P-No.	Notes	Specified Minimum Tensile, ksi	Specified Minimum Yield, ksi	*E* or *F*
Welded Pipe and Tube								
B 464	N08020	Annealed	Ni–Fe–Cr–Mo–Cu–Cb	45	(1)	80	35	0.85
	N08020	Annealed	Ni–Fe–Cr–Mo–Cu–Cb	45	(1)(2)	80	35	0.85
B 468	N08020	Annealed	Ni–Fe–Cr–Mo–Cu–Cb	45	(1)	80	35	0.85
	N08020	Annealed	Ni–Fe–Cr–Mo–Cu–Cb	45	(1)(2)	80	35	0.85
B 619	N06022	Sol. Ann.	Ni–Mo–Cr–LC	44	(1)(12)	100	...	0.85
	N06022	Sol. Ann.	Ni–Mo–Cr–LC	44	(1)(2)(12)	100	...	0.85
	N10276	Sol. Ann.	LC–Ni–Mo–Cr	44	(1)(12)	100	41	0.85
	N10276	Sol. Ann.	LC–Ni–Mo–Cr	44	(1)(2)(12)	100	41	0.85
B 626	N06022	Sol. Ann.	Ni–Mo–Cr–LC	44	(1)(12)	100	...	0.85
	N06022	Sol. Ann.	Ni–Mo–Cr–LC	44	(1)(2)(12)	100	...	0.85
	N10276	Sol. Ann.	LC–Ni–Mo–Cr	44	(1)(12)	100	41	0.85
	N10276	Sol. Ann.	LC–Ni–Mo–Cr	44	(1)(2)(12)	100	41	0.85
B 673	N08925	Annealed	Ni–Fe–Cr–Mo–Cu–LC	45	(1)	87	...	0.85
	N08926	Annealed	Ni–Fe–Cr–Mo–Cu–N–LC	...	(1)	94	...	0.85
	N08926	Annealed	Ni–Fe–Cr–Mo–Cu–N–LC	...	(1)(2)	94	...	0.85
B 674	N08925	Annealed	Ni–Fe–Cr–Mo–Cu–LC	45	(1)	87	...	0.85
	N08926	Annealed	Ni–Fe–Cr–Mo–Cu–N–LC	...	(1)	94	...	0.85
	N08926	Annealed	Ni–Fe–Cr–Mo–Cu–N–LC	...	(1)(2)	94	...	0.85
B 675	N08367	Annealed	Ni–Fe–Cr–Mo	45	(1)(8)(13)	104	46	0.85
	N08367	Annealed	Ni–Fe–Cr–Mo	45	(1)(2)(8)(13)	104	46	0.85
B 676	N08367	Annealed	Ni–Fe–Cr–Mo	45	(1)(8)(13)	104	46	0.85
	N08367	Annealed	Ni–Fe–Cr–Mo	45	(1)(2)(8)(13)	104	46	0.85
B 804	N08367	Annealed	Ni–Fe–Cr–Mo	45	(1)(8)(13)	95	45	0.85
	N08367	Annealed	Ni–Fe–Cr–Mo	45	(1)(2)(8)(13)	95	45	0.85
Plate, Sheet, and Strip								
B 168	N06600	Annealed	Ni–Cr–Fe	43	(1)	80	35	1.00
	N06600	Annealed	Ni–Cr–Fe	43	(1)(2)	80	35	1.00
	N06600	Hot rolled	Ni–Cr–Fe	43	(1)(4)	85	35	1.00
	N06600	Hot rolled	Ni–Cr–Fe	43	(1)(2)(4)	85	35	1.00
B 409	N08800	Annealed	Ni–Cr–Fe	45	(4)(7)	75	30	1.00
	N08800	Annealed	Ni–Cr–Fe	45	(2)(4)(7)	75	30	1.00
	N08810	Annealed	Ni–Cr–Fe	45	(4)(7)	65	25	1.00
	N08810	Annealed	Ni–Cr–Fe	45	(2)(4)(7)	65	25	1.00
B 424	N08825	Annealed	Ni–Fe–Cr–Mo–Cu	45	(1)(7)	85	35	1.00
	N08825	Annealed	Ni–Fe–Cr–Mo–Cu	45	(1)(2)(7)	85	35	1.00
B 463	N08020	Annealed	Ni–Fe–Cr–Mo–Cu–Cb	45	(1)	80	35	1.00
	N08020	Annealed	Ni–Fe–Cr–Mo–Cu–Cb	45	(1)(12)	80	35	1.00

Copyright ASME International
Provided by IHS under license with ASME
No reproduction or networking permitted without license from IHS
Not for Resale

Table A-4 Nickel and High Nickel Alloys (Cont'd)

Maximum Allowable Stress Values in Tension, ksi, for Metal Temperature, ° F, Not Exceeding																		UNS Alloy No.	Spec. No.
−20 to 100	200	300	400	500	600	650	700	750	800	850	900	950	1,000	1,050	1,100	1,150	1,200		
																			Welded Pipe and Tube
17.0	17.0	16.8	15.9	15.5	15.1	14.9	14.7	14.5	14.3	...	...	...	...	...	...	...	...	N08020	B 464
17.0	17.0	16.8	16.5	16.4	16.4	16.3	16.3	16.3	16.2	...	...	...	...	...	...	...	...	N08020	
17.0	17.0	16.8	15.9	15.5	15.1	14.9	14.7	14.5	14.3	...	...	...	...	...	...	...	...	N08020	B 468
17.0	17.0	16.8	16.5	16.4	16.4	16.3	16.3	16.3	16.2	...	...	...	...	...	...	...	...	N08020	
21.2	21.2	20.8	19.3	18.0	17.1	16.7	16.3	16.1	15.8	...	...	...	...	...	...	...	...	N06022	B 619
21.2	21.2	21.1	20.3	19.7	19.3	19.2	19.0	19.0	18.9	...	...	...	...	...	...	...	...	N06022	
21.3	21.3	19.6	18.0	17.0	16.0	15.6	15.1	14.8	14.5	14.3	14.1	14.0	14.0	...	...	...	...	N10276	
21.3	21.3	21.3	20.7	20.3	20.0	19.8	19.6	19.5	19.4	19.2	19.0	18.8	18.5	...	...	...	...	N10276	
21.2	21.2	20.8	19.3	18.0	17.1	16.7	16.3	16.1	15.8	...	...	...	...	...	...	...	...	N06022	B 626
21.2	21.2	21.1	20.3	19.7	19.3	19.2	19.0	19.0	18.9	...	...	...	...	...	...	...	...	N06022	
21.3	21.3	19.6	18.0	17.0	16.0	15.6	15.1	14.8	14.5	14.3	14.1	14.0	14.0	...	...	...	...	N10276	
21.3	21.3	21.3	20.7	20.3	20.0	19.8	19.6	19.5	19.4	19.2	19.0	18.8	18.5	...	...	...	...	N10276	
18.4	18.4	17.8	16.7	15.6	14.7	14.4	14.4	14.4	14.4	...	...	...	...	...	...	...	...	N08925	B 673
20.0	20.0	18.1	16.9	15.9	15.2	15.0	15.0	14.9	...	...	...	...	...	...	...	...	...	N08926	
20.0	20.0	19.5	18.5	17.7	17.0	16.7	16.4	16.3	...	...	...	...	...	...	...	...	...	N08926	
18.4	18.4	17.8	16.7	15.6	14.7	14.4	14.4	14.4	14.4	...	...	...	...	...	...	...	...	N08925	B674
20.0	20.0	18.1	16.9	15.9	15.2	15.0	15.0	14.9	...	...	...	...	...	...	...	...	...	N08926	
20.0	20.0	19.5	18.5	17.7	17.0	16.7	16.4	16.3	...	...	...	...	...	...	...	...	...	N08926	
22.1	22.1	20.6	19.3	17.8	16.9	16.4	16.2	15.9	15.6	...	...	...	...	...	...	...	...	N08367	B 675
22.1	22.1	20.9	20.0	19.5	19.0	18.8	18.6	18.5	18.4	...	...	...	...	...	...	...	...	N08367	
22.1	22.1	20.6	19.3	17.8	16.9	16.4	16.2	15.9	15.6	...	...	...	...	...	...	...	...	N08367	B 676
22.1	22.1	20.9	20.0	19.5	19.0	18.8	18.6	18.5	18.4	...	...	...	...	...	...	...	...	N08367	
20.2	20.2	19.1	18.2	17.3	16.6	16.1	15.8	15.6	15.3	...	...	...	...	...	...	...	...	N08367	B 804
20.2	20.2	19.1	18.2	17.8	17.3	17.2	17.0	16.9	16.8	...	...	...	...	...	...	...	...	N08367	
																			Plate, Sheet, and Strip
20.0	20.0	20.0	20.0	20.0	20.0	19.8	19.6	19.4	19.1	18.7	16.0	10.6	7.0	4.5	3.0	2.2	2.0	N06600	B 168
20.0	20.0	20.0	20.0	20.0	20.0	20.0	20.0	20.0	20.0	20.0	16.0	10.6	7.0	4.5	3.0	2.2	2.0	N06600	
21.2	21.2	21.2	21.2	21.2	21.2	21.2	21.1	21.0	20.4	20.2	19.6	19.3	14.5	10.3	7.2	5.8	5.5	N06600	
21.2	21.2	21.2	21.2	21.2	21.2	21.2	21.2	21.2	21.2	21.2	21.2	21.2	14.5	10.3	7.2	5.8	5.5	N06600	
18.7	18.7	17.9	17.2	16.7	16.3	16.1	15.9	15.7	15.5	15.3	15.1	14.9	14.7	14.5	13.0	9.8	6.6	N08800	B 409
18.7	18.7	18.7	18.7	18.7	18.7	18.6	18.6	18.5	18.5	18.3	18.2	17.9	17.6	17.0	13.0	9.8	6.6	N08800	
16.2	15.4	14.5	13.5	12.9	12.2	11.9	11.7	11.4	11.1	10.9	10.7	10.5	10.3	10.1	10.0	9.3	7.4	N08810	
16.2	16.2	16.2	16.2	16.0	16.0	16.0	15.7	15.4	15.3	15.1	14.8	14.6	14.4	13.7	11.6	9.3	7.4	N08810	
21.2	21.2	20.4	19.2	18.3	17.8	17.6	17.3	17.2	17.1	...	...	...	...	...	...	...	...	N08825	B 424
21.2	21.2	21.2	21.2	21.2	21.2	21.1	21.0	20.9	20.8	...	...	...	...	...	...	...	...	N08825	
20.0	20.0	19.8	18.7	18.2	17.5	17.4	17.3	17.0	16.8	...	...	...	...	...	...	...	...	N08020	B 463
20.0	20.0	19.8	19.4	19.3	19.2	19.2	19.2	19.1	19.1	...	...	...	...	...	...	...	...	N08020	

--`,,```,,,,````-`-`,,`,,`,`,,`---

Copyright ASME International
Provided by IHS under license with ASME
No reproduction or networking permitted without license from IHS
Not for Resale

Table A-4 Nickel and High Nickel Alloys (Cont'd)

Spec. No.	UNS Alloy No.	Temper or Condition	Nominal Composition	P-No.	Notes	Specified Minimum Tensile, ksi	Specified Minimum Yield, ksi	*E* or *F*
Plate, Sheet, and Strip (Cont'd)								
B 575	N06022	Sol. Ann.	Ni–Mo–Cr–LC	44	(1)(12)	100	...	1.00
	N06022	Sol. Ann.	Ni–Mo–Cr–LC	44	(1)(2)(12)	100	...	1.00
	N10276	Sol. Ann.	LC–Ni–Mo–Cr	44	(1)(12)	100	41	1.00
	N10276	Sol. Ann.	LC–Ni–Mo–Cr	44	(1)(2)(12)	100	41	1.00
B 625	N08925	Annealed	Ni–Fe–Cr–Mo–Cu–LC	45	(1)	87	...	1.00
	N08926	Annealed	Ni–Fe–Cr–Mo–Cu–N–LC	...	(1)	94	...	1.00
	N08926	Annealed	Ni–Fe–Cr–Mo–Cu–N–LC	...	(1)(2)	94	...	1.00
B 688	N08367	Annealed	Ni–Fe–Cr–Mo	45	(1)(7)(9)(13)	104	46	1.00
	N08367	Annealed	Ni–Fe–Cr–Mo	45	(1)(2)(7)(9)(13)	104	46	1.00
	N08367	Annealed	Ni–Fe–Cr–Mo	45	(1)(7)(10)(13)	100	45	1.00
	N08367	Annealed	Ni–Fe–Cr–Mo	45	(1)(2)(7)(10)(13)	100	45	1.00
	N08367	Annealed	Ni–Fe–Cr–Mo	45	(1)(7)(11)(13)	95	45	1.00
	N08367	Annealed	Ni–Fe–Cr–Mo	45	(1)(2)(7)(11)(13)	95	45	1.00
Bars, Rods, Shapes, and Forgings								
B 408	N08800	Annealed	Ni–Cr–Fe	45	(7)	75	30	1.00
	N08800	Annealed	Ni–Cr–Fe	45	(2)(7)	75	30	1.00
	N08810	Annealed	Ni–Cr–Fe	45	(7)	65	25	1.00
	N08810	Annealed	Ni–Cr–Fe	45	(2)(7)	65	25	1.00
B 425	N08825	Annealed	Ni–Fe–Cr–Mo–Cu	45	(1)(7)	85	35	1.00
	N08825	Annealed	Ni–Fe–Cr–Mo–Cu	45	(1)(2)(7)	85	35	1.00
B 462	N08020	Annealed	Ni–Fe–Cr–Mo–Cu–Cb	45	(1)	80	35	1.00
	N08020	Annealed	Ni–Fe–Cr–Mo–Cu–Cb	45	(1)(2)	80	35	1.00
B 473	N08020	Annealed	Cr–Ni–Fe–Mo–Cu–Cb	45	(1)	80	35	1.00
	N08020	Annealed	Cr–Ni–Fe–Mo–Cu–Cb	45	(1)(2)	80	35	1.00
B 564	N08367	Annealed	Ni–Fe–Cr–Mo	45	(1)(8)(13)	95	45	1.00
	N08367	Annealed	Ni–Fe–Cr–Mo	45	(1)(2)(8)(13)	95	45	1.00
	N08800	Annealed	Ni–Cr–Fe	45	(1)	75	30	1.00
	N08800	Annealed	Ni–Cr–Fe	45	(1)(2)	75	30	1.00
	N08810	Annealed	Ni–Cr–Fe	45	(1)	65	25	1.00
	N08810	Annealed	Ni–Cr–Fe	45	(1)(2)	65	25	1.00
B 574	N06022	Sol. Ann.	Ni–Mo–Cr–LC	44	(1)(12)	100	...	1.00
	N06022	Sol. Ann.	Ni–Mo–Cr–LC	44	(1)(2)(12)	100	...	1.00
	N10276	Sol. Ann.	LC–Ni–Mo–Cr	44	(1)(12)	100	41	1.00
	N10276	Sol. Ann.	LC–Ni–Mo–Cr	44	(1)(2)(12)	100	41	1.00
B 649	N08925	Annealed	Ni–Fe–Cr–Mo–Cu–LC	45	(1)	87	...	0.85
	N08926	Annealed	Ni–Fe–Cr–Mo–Cu–N–LC	...	(1)	94	...	1.00
	N08926	Annealed	Ni–Fe–Cr–Mo–Cu–N–LC	...	(1)(2)	94	...	1.00
B 691	N08367	Annealed	Ni–Fe–Cr–Mo	45	(1)(8)(13)	95	45	1.00
	N08367	Annealed	Ni–Fe–Cr–Mo	45	(1)(2)(8)(13)	95	45	1.00

Copyright ASME International
Provided by IHS under license with ASME
No reproduction or networking permitted without license from IHS Not for Resale

Table A-4 Nickel and High Nickel Alloys (Cont'd)

Maximum Allowable Stress Values in Tension, ksi, for Metal Temperature, ° F, Not Exceeding																		UNS Alloy No.	Spec. No.
−20 to 100	200	300	400	500	600	650	700	750	800	850	900	950	1,000	1,050	1,100	1,150	1,200		
Plate, Sheet, and Strip (Cont'd)																			
25.0	25.0	24.5	22.7	21.2	20.1	19.6	19.2	18.9	18.6	...	...	...	...	...	...	...	...	N06022	B 575
25.0	25.0	24.8	23.9	23.2	22.7	22.6	22.4	22.3	22.2	...	...	...	...	...	...	...	...	N06022	
25.0	25.0	23.0	21.2	20.0	18.8	18.3	17.8	17.4	17.1	16.8	16.6	16.5	16.5	...	...	...	...	N10276	
25.0	25.0	25.0	24.3	23.9	23.5	23.3	23.1	22.9	22.8	22.6	22.3	22.1	21.8	...	...	...	...	N10276	
21.7	21.7	20.9	19.6	18.3	17.3	16.9	16.9	16.9	16.9	...	...	...	...	...	...	...	...	N08925	B 625
23.5	23.5	21.3	19.9	18.7	17.9	17.7	17.6	17.5	...	...	...	...	...	...	...	...	...	N08926	
23.5	23.5	22.9	21.8	20.8	20.0	19.6	19.3	19.2	...	...	...	...	...	...	...	...	...	N08926	
26.0	26.0	24.2	22.7	20.9	19.9	19.3	19.0	18.7	18.4	...	...	...	...	...	...	...	...	N08367	B 688
26.0	26.0	24.6	23.5	22.9	22.3	22.1	21.9	21.8	21.7	...	...	...	...	...	...	...	...	N08367	
25.0	25.0	23.6	22.2	20.4	19.5	18.9	18.6	18.3	18.0	...	...	...	...	...	...	...	...	N08367	
25.0	25.0	23.6	22.6	22.0	21.9	21.3	21.1	21.0	20.9	...	...	...	...	...	...	...	...	N08367	
23.8	23.8	22.5	21.4	20.4	19.5	18.9	18.6	18.3	18.0	...	...	...	...	...	...	...	...	N08367	
23.8	23.8	22.5	21.4	20.9	20.4	20.2	20.0	19.9	19.8	...	...	...	...	...	...	...	...	N08367	
Bars, Rods, Shapes, and Forgings																			
18.7	18.7	17.9	17.2	16.7	16.3	16.1	15.9	15.7	15.5	15.3	15.1	14.9	14.7	14.5	13.0	9.8	6.6	N08800	B 408
18.7	18.7	18.7	18.7	18.7	18.7	18.6	18.6	18.5	18.5	18.3	18.2	17.9	17.6	17.0	13.0	9.8	6.6	N08800	
16.2	15.4	14.5	13.5	12.9	12.2	11.9	11.7	11.4	11.1	10.9	10.7	10.5	10.3	10.1	10.0	9.3	7.4	N08810	
16.2	16.2	16.2	16.2	16.0	16.0	16.0	15.7	15.4	15.3	15.1	14.8	14.6	14.4	13.7	11.6	9.3	7.4	N08810	
21.2	21.2	20.4	19.2	18.3	17.8	17.6	17.3	17.2	17.1	...	...	...	...	...	...	...	...	N08825	B 425
21.2	21.2	21.2	21.2	21.2	21.2	21.1	21.0	20.9	20.8	...	...	...	...	...	...	...	...	N08825	
20.0	20.0	19.8	18.7	18.2	17.7	17.5	17.3	17.1	16.8	...	...	...	...	...	...	...	...	N08020	B 462
20.0	20.0	19.8	19.4	19.3	19.3	19.2	19.2	19.2	19.1	...	...	...	...	...	...	...	...	N08020	
20.0	20.0	19.8	18.7	18.2	17.7	17.5	17.3	17.1	16.8	...	...	...	...	...	...	..	...	N08020	B 473
20.0	20.0	19.8	19.4	19.3	19.3	19.2	19.2	19.2	19.1	...	...	...	...	...	...	...	...	N08020	
23.8	23.8	22.5	21.4	20.4	19.5	18.9	18.6	18.3	18.0	...	...	...	...	...	...	...	...	N08367	B 564
23.8	23.8	22.5	21.4	20.9	20.4	20.2	20.0	19.9	19.8	...	...	...	...	...	...	...	...	N08367	
18.7	18.7	17.9	17.2	16.7	16.3	16.1	15.9	15.7	15.5	15.3	15.1	14.9	14.7	14.5	13.0	9.8	6.6	N08800	
18.7	18.7	18.7	18.7	18.7	18.7	18.6	18.6	18.5	18.5	18.3	18.2	17.9	17.6	17.0	13.0	9.8	6.6	N08800	
16.2	15.4	14.5	13.5	12.9	12.2	11.9	11.7	11.4	11.1	10.9	10.7	10.5	10.3	10.1	10.0	9.3	7.4	N08810	
16.2	16.2	16.2	16.2	16.0	16.0	16.0	15.7	15.4	15.3	15.1	14.8	14.6	14.4	13.7	11.6	9.3	7.4	N08810	
25.0	25.0	24.5	22.7	21.2	20.1	19.6	19.2	18.9	18.6	...	...	...	...	...	...	...	...	N06022	B 574
25.0	25.0	24.8	23.9	23.2	22.7	22.6	22.4	22.3	22.2	...	...	...	...	...	...	...	...	N06022	
25.0	25.0	23.0	21.2	20.0	18.8	18.3	17.8	17.4	17.1	16.8	16.6	16.5	16.5	...	...	...	...	N10276	
25.0	25.0	25.0	24.3	23.9	23.5	23.3	23.1	22.9	22.8	22.6	22.3	22.1	21.8	...	...	...	...	N10276	
21.7	21.7	20.9	19.6	18.3	17.3	16.9	16.9	16.9	16.9	...	...	...	...	...	...	...	...	N08925	B 649
23.5	23.5	21.3	19.9	18.7	17.9	17.7	17.6	17.5	...	...	...	...	...	...	...	...	...	N08926	
23.5	23.5	22.9	21.8	20.8	20.0	19.6	19.3	19.2	...	...	...	...	...	...	...	...	...	N08926	
23.8	23.8	22.5	21.4	20.4	19.5	18.9	18.6	18.3	18.0	...	...	...	...	...	...	...	...	N08367	B 691
23.8	23.8	22.5	21.4	20.9	20.4	20.2	20.0	19.9	19.8	...	...	...	...	...	...	...	...	N08367	

--`,,```,,,,````-`-`,,`,,`,`,,`---

Copyright ASME International
Provided by IHS under license with ASME
No reproduction or networking permitted without license from IHS
Not for Resale

Table A-4 Nickel and High Nickel Alloys (Cont'd)

Spec. No.	UNS Alloy No.	Temper or Condition	Nominal Composition	P-No.	Notes	Specified Minimum Tensile, ksi	Specified Minimum Yield, ksi	*E* or *F*
Seamless Fittings								
B 366	N06022	Sol. Ann.	Ni–Mo–Cr–LC	44	(1)(12)(13)	100	. . .	1.00
	N06022	Sol. Ann.	Ni–Mo–Cr–LC	44	(1)(2)(12)(13)	100	. . .	1.00
	N08020	Annealed	Cr–Ni–Fe–Mo–Cu–Cb	45	(1)	80	35	. . .
	N08020	Annealed	Cr–Ni–Fe–Mo–Cu–Cb	45	(1)(2)	80	35	. . .
	N08367	Annealed	Ni–Fe–Cr–Mo	45	(1)(8)(13)	95	45	1.00
	N08367	Annealed	Ni–Fe–Cr–Mo	45	(1)(2)(8)(13)	95	45	1.00
B 366	N08926	Annealed	Ni–Fe–Cr–Mo–Cu–N–LC	. . .	(1)	94	. . .	1.00
	N08926	Annealed	Ni–Fe–Cr–Mo–Cu–N–LC	. . .	(1)(2)	94	. . .	1.00
	N10276	Sol. Ann.	LC–Ni–Mo–Cr	44	(1)(12)	100	41	1.00
	N10276	Sol. Ann.	LC–Ni–Mo–Cr	44	(1)(2)(12)	100	41	1.00
B 462	N08367	Annealed	Ni–Fe–Cr–Mo	45	(1)(8)(13)	95	45	1.00
	N08367	Annealed	Ni–Fe–Cr–Mo	45	(1)(2)(8)(13)	95	45	1.00
Welded Fittings								
B 366	N06022	Sol. Ann.	Ni–Mo–Cr–LC	44	(1)(12)(13)	100	. . .	0.85
	N06022	Sol. Ann.	Ni–Mo–Cr–LC	44	(1)(2)(12)(13)	100	. . .	0.85
	N08020	Annealed	Cr–Ni–Fe–Mo–Cu–Cb	45	(1)	80	35	0.85
	N08020	Annealed	Cr–Ni–Fe–Mo–Cu–Cb	45	(1)(2)	80	35	0.85
B 366	N08925	Annealed	Ni–Fe–Cr–Mo–Cu–LC	45	(1)	87	. . .	0.85
	N08926	Annealed	Ni–Fe–Cr–Mo–Cu–N–LC	. . .	(1)	94	. . .	0.85
	N08926	Annealed	Ni–Fe–Cr–Mo–Cu–N–LC	. . .	(1)(2)	94	. . .	0.85
	N10276	Sol. Ann.	LC–Ni–Mo–Cr	44	(1)(12)	100	41	0.85
	N10276	Sol. Ann.	LC–Ni–Mo–Cr	44	(1)(2)(12)	100	41	0.85

GENERAL NOTES:

(a) The tabulated specifications are ANSI/ASTM or ASTM. For ASME Boiler and Pressure Vessel Code applications, see related specifications in Section II of the ASME Code.

(b) The stress values in this Table may be interpolated to determine values for intermediate temperatures.

(c) The P-Numbers indicated in this Table are identical to those adopted by the ASME Boiler and Pressure Vessel Code. Qualification of welding procedures, welders, and welding operators is required and shall comply with the ASME Boiler and Pressure Vessel Code, Section IX, except as modified by para. 127.5.

(d) Tensile strengths and allowable stresses shown in "ksi" are "thousands of pounds per square inch."

(e) The materials listed in this table shall not be used at design temperatures above those for which allowable stress values are given.

(f) The tabulated stress values are $S \times E$ (weld joint efficiency factor) or $S \times F$ (material quality factor), as applicable. Weld joint efficiency factors are shown in Table 102.4.3.

(g) Pressure-temperature ratings of piping components, as published in standards referenced in this Code, may be used for components meeting the requirements of those standards. The allowable stress values given in this Table are for use in designing piping components which are not manufactured in accordance with referenced standards.

(h) The y coefficient $= 0.4$ except where Note (7) applies [see Table 104.1.2(A)].

Copyright ASME International
Provided by IHS under license with ASME
No reproduction or networking permitted without license from IHS
Not for Resale

Table A-4 Nickel and High Nickel Alloys (Cont'd)

Maximum Allowable Stress Values in Tension, ksi, for Metal Temperature, ° F, Not Exceeding																		UNS Alloy No.	Spec. No.
−20 to 100	200	300	400	500	600	650	700	750	800	850	900	950	1,000	1,050	1,100	1,150	1,200		
																			Seamless Fittings
25.0	25.0	24.5	22.7	21.2	20.1	19.6	19.2	18.9	18.6	...	...	...	...	...	...	...	...	N06022	B 366
25.0	25.0	24.8	23.9	23.2	22.7	22.6	22.4	22.3	22.2	...	...	...	...	...	...	...	...	N06022	
20.0	20.0	19.8	18.7	18.2	17.5	17.4	17.3	17.0	16.8	...	...	...	...	...	...	...	...	N08020	
20.0	20.0	19.8	19.4	19.3	19.2	19.2	19.2	19.1	19.1	...	...	...	...	...	...	...	...	N08020	
23.8	23.8	22.5	21.4	20.4	19.5	18.9	18.6	18.3	18.0	...	...	...	...	...	...	...	...	N08367	
23.8	23.8	22.5	21.4	20.9	20.4	20.2	20.0	19.9	19.8	...	...	...	...	...	...	...	...	N08367	
23.5	23.5	21.3	19.9	18.7	17.9	17.7	17.6	17.5	...	...	...	...	...	...	...	...	...	N08926	B 366
23.5	23.5	22.9	21.8	20.8	20.0	19.6	19.3	19.2	...	...	...	...	...	...	...	...	...	N08926	
25.0	25.0	23.0	21.2	20.0	18.8	18.3	17.8	17.4	17.1	16.8	16.6	16.5	16.5	...	...	...	...	N10276	
25.0	25.0	25.0	24.3	23.9	23.5	23.3	23.1	22.9	22.8	22.6	22.3	22.1	21.8	...	...	...	...	N10276	
23.8	23.8	22.5	21.4	20.4	19.5	18.9	18.6	18.3	18.0	...	...	...	...	...	...	...	...	N08367	B 462
23.8	23.8	22.5	21.4	20.9	20.4	20.2	20.0	19.9	19.8	...	...	...	...	...	...	...	...	N08367	
																			Welded Fittings
21.2	21.2	20.8	19.3	18.0	17.1	16.7	16.3	16.1	15.8	...	...	...	...	...	...	...	...	N06022	B 366
21.2	21.2	21.1	20.3	19.7	19.3	19.2	19.0	19.0	18.9	...	...	...	...	...	...	...	...	N06022	
17.0	17.0	16.8	15.9	15.5	14.9	14.8	14.7	14.5	14.3	...	...	...	...	...	...	...	...	N08020	
17.0	17.0	16.8	16.5	16.4	16.4	16.3	16.3	16.3	16.2	...	...	...	...	...	...	...	...	N08020	
18.4	18.4	17.8	16.7	15.6	14.7	14.4	14.4	14.4	14.4	...	...	...	...	...	...	...	...	N08925	B 366
20.0	20.0	18.1	16.9	15.9	15.2	15.0	15.0	14.9	...	...	...	...	...	...	...	...	...	N08926	
20.0	20.0	19.5	18.5	17.7	17.0	16.7	16.4	16.3	...	...	...	...	...	...	...	...	...	N08926	
21.3	21.3	19.6	18.0	17.0	16.0	15.6	15.1	14.8	14.5	14.3	14.1	14.0	14.0	...	...	...	...	N10276	
21.3	21.3	21.3	20.7	20.3	20.0	19.8	19.6	19.5	19.4	19.2	19.0	18.8	18.5	...	...	...	...	N10276	

NOTES:

(1) THIS MATERIAL IS NOT ACCEPTABLE FOR USE ON BOILER EXTERNAL PIPING — SEE FIGS. 100.1.2(A) AND (B).

(2) Due to the relatively low yield strengths of these materials, these higher allowable stress values were established at temperatures where the short time tensile properties govern to permit the use of these alloys where slightly greater deformation is acceptable. These stress values exceed 67% but do not exceed 90% of the yield strength at temperature. Use of these values may result in dimensional changes due to permanent strain. These values should not be used for flanges of gasketed joints or other applications where slight amounts ofdistortion can cause leakage or malfunction.

(3) The maximum temperature is limited to 500°F because harder temper adversely affects design stress in the creep rupture temperature range.

(4) These values may be used for plate material only.

(5) These values apply to sizes NPS 5 and smaller.

(6) These values apply to sizes larger than NPS 5.

(7) See Table 104.1.2(A) for *y* coefficient value.

(8) Heat treatment after forming or welding is neither required nor prohibited. However, if heat treatment is applied, the solution annealing treatment shall consist of heating to a minimum temperature of 2025°F and then quenching in water or rapidly cooling by other means.

(9) These values apply to thickness less than $^3/_{16}$ in.

(10) These values apply to thickness from $^3/_{16}$ in. up to and including $^3/_4$ in.

(11) These values apply to thickness more than $^3/_4$ in.

(12) All filler metal, including consumable insert material, shall comply with the requirements of Section IX of the ASME Boiler and Pressure Vessel Code.

(13) This material is one of the highest tensile strength materials approved for use in ASME pressure component applications and little fatigue data is available for it in the ASME database. Therefore, the designer shall consider this when calculating the allowable stress range for expansion stresses and provide appropriate design margins.

Copyright ASME International
Provided by IHS under license with ASME
No reproduction or networking permitted without license from IHS
Not for Resale

Table A-5 Cast Iron

Spec. No.	Class	Notes	Specified Minimum Tensile, ksi	Specified Minimum Yield, ksi	E or F
Gray Cast Iron					
A 48	20	(1)(2)(3)(4)	20	...	...
	25	(1)(2)(3)(4)	25	...	...
	30	(1)(2)(3)(4)	30	...	...
	35	(1)(2)(3)(4)	35	...	...
	40	(1)(2)(3)(4)	40	...	...
	45	(1)(2)(3)(4)	45	...	...
	50	(1)(2)(3)(4)	50	...	...
	55	(1)(2)(3)(4)	55	...	...
	60	(1)(2)(3)(4)	60	...	...
A 126	A	(3)(4)(7)	21	...	...
	B	(3)(4)(7)	31	...	...
	C	(3)(4)(7)	41	...	...
A 278	20	(2)(4)(5)	20	...	...
	25	(2)(4)(5)	25	...	...
	30	(2)(4)(5)	30	...	...
	35	(2)(4)(5)	35	...	...
	40	(2)(4)(5)	40	...	...
	45	(2)(4)(5)	45	...	...
	50	(2)(4)(5)	50	...	...
	55	(2)(4)(5)	55	...	...
	60	(2)(4)(5)	60	...	...
Ductile Cast Iron					
A 395	60-40-18	(6)(8)	60	40	0.80
	65-45-15	(6)(8)	65	45	0.80
A 536	60-42-10	(1)(8)	60	42	0.80
	70-50-05	(1)(8)	70	50	0.80

GENERAL NOTES:

(a) The tabulated specifications are ANSI/ASTM or ASTM. For ASME Boiler and Pressure Vessel Code applications, see related specifications in Section II of the ASME Code.

(b) The stress values in this Table may be interpolated to determine values for intermediate temperatures.

(c) Cast iron components shall not be welded during fabrication or assembly as part of the piping system.

(d) Tensile strengths and allowable stresses shown in "ksi" are "thousands of pounds per square inch."

(e) The materials listed in this Table shall not be used at design temperatures above those for which allowable stress values are given.

(f) The tabulated stress values for ductile cast iron materials are $S \times F$ (material quality factor). Material quality factors are not applicable to other types of cast iron.

(g) Pressure-temperature ratings of piping components, as published in standards referenced in this Code, may be used for components meeting the requirements of those standards. The allowable stress values given in this Table are for use in designing piping components which are not manufactured in accordance with referenced standards.

(h) The y coefficient $= 0.4$ [see Table 104.1.2(A)].

Copyright ASME International
Provided by IHS under license with ASME
No reproduction or networking permitted without license from IHS Not for Resale

Table A-5 Cast Iron (04)

Maximum Allowable Stress Values in Tension, ksi, for Metal Temperature, °F, Not Exceeding							
−20 to 400	450	500	600	650	−20 to 650	Class	Spec. No.
							Gray Cast Iron
2.0	...	...	...	...	...	20	A 48
2.5	...	...	...	...	...	25	
3.0	...	...	...	...	...	30	
3.5	...	...	...	...	...	35	
4.0	...	...	...	...	...	40	
4.5	...	...	...	...	...	45	
5.0	...	...	...	...	...	50	
5.5	...	...	...	...	...	55	
6.0	...	...	...	...	...	60	
2.1	...	...	...	...	...	A	A 126
3.1	...	...	...	...	...	B	
4.1	...	...	...	...	...	C	
2.0	2.0	...	...	...	...	20	A 278
2.5	2.5	...	...	...	...	25	
3.0	3.0	...	...	...	...	30	
3.5	3.5	...	...	...	...	35	
...	...	...	...	...	4.0	40	
...	...	...	...	...	4.5	45	
...	...	...	...	...	5.0	50	
...	...	...	...	...	5.5	55	
...	...	...	...	...	6.0	60	
							Ductile Cast Iron
...	...	...	...	...	9.6	...	A 395
10.4	10.4	...	...	...	...	...	
...	...	...	...	...	4.8	60-42-10	A 536
...	...	...	...	...	5.6	70-50-05	

NOTES:
(1) THIS MATERIAL IS NOT ACCEPTABLE FOR BOILER EXTERNAL PIPING — SEE FIGS. 100.1.2(A) AND (B).
(2) Material quality factors are not applicable to these materials.
(3) For saturated steam at 250 psi (406°F), the stress values given at 400°F may be used.
(4) For limitations on the use of this material, see para. 124.4.
(5) This material shall not be used where the design pressure exceeds 250 psig [1 725 kPa (gage)] or where the design temperature exceeds 450°F (230°C).
(6) This material shall not be used for boiler external piping where the design pressure exceeds 350 psig [2 415 kPa (gage)] or where the design temperature exceeds 450°F (230°C).
(7) Piping components conforming to either ASME B16.1 or ASME B16.4 may be used for boiler external piping, subject to all the requirements of the particular standard.
(8) For limitations on the use of this material, see para. 124.6.

Copyright ASME International
Provided by IHS under license with ASME
No reproduction or networking permitted without license from IHS Not for Resale

Table A-6 Copper and Copper Alloys

Spec No.	UNS Alloy No.	Temper or Condition	Size or Thickness, in.	P-No.	Notes	Specified Minimum Tensile, ksi	Specified Minimum Yield, ksi	*E* or *F*
Seamless Pipe and Tube								
B 42	C10200, C12000, C12200	Annealed	...	31	(2)	30	9	1.00
	C10200, C12000, C12200	Drawn	1/8 to 2	31	(2)(4)	45	40	1.00
	C10200, C12000, C12200	Drawn	2 1/2 to 12	31	(2)(4)	36	30	1.00
B 43	C23000	Annealed	...	31	(2)	40	12	1.00
B 68	C10200, C12000, C12200	Annealed	...	31	(1)	30	9	1.00
B 75	C10200, C12000	Annealed	...	31	(2)	30	9	1.00
	C10200, C12000	Light Drawn	...	31	(2)(4)	36	30	1.00
	C10200, C12000	Hard Drawn	...	31	(2)(4)	45	40	1.00
B 75	C12200	Annealed	...	31	(2)	30	9	1.00
	C12200	Light Drawn	...	31	(2)(4)	36	30	1.00
	C12200	Hard Drawn	...	31	(2)(4)	45	40	1.00
B 88	C10200, C12000, C12200	Annealed	...	31	(1)	30	9	1.00
	C10200, C12000, C12200	Drawn	...	31	(1)(4)	36	30	1.00
B 111	C10200, C12000	Light Drawn	...	31	(1)(3)	36	30	1.00
	C10200, C12000	Hard Drawn	...	31	(1)(3)	45	40	1.00
	C12200, C14200	Light Drawn	...	31	(1)(3)	36	30	1.00
	C12200, C14200	Hard Drawn	...	31	(1)(3)	45	40	1.00
B 111	C23000	Annealed	...	32	(1)	40	12	1.00
	C28000	Annealed	...	32	(2)	50	20	1.00
	C44300, C44400, C44500	Annealed	...	32	(2)	45	15	1.00
	C60800	Annealed	...	35	(1)	50	19	1.00
B 111	C68700	Annealed	...	32	(1)	50	18	1.00
	C70400	Annealed	...	34	(1)	38	12	1.00
	C70400	Light Drawn	...	34	(1)(4)	40	30	1.00
B 111	C70600	Annealed	...	34	(2)	40	15	1.00
	C71000	Annealed	...	34	(2)	45	16	1.00
	C71500	Annealed	...	34	(2)	52	18	1.00
B 280	C12200	Annealed	...	31	(1)	30	9	1.00
	C12200	Drawn	...	31	(1)(4)	36	30	1.00
B 302	C12000, C12200	Drawn	...	32	(1)(3)	36	30	1.00
B 315	C61300, C61400	Annealed	...	35	(1)	65	28	1.00
B 466	C70600	Annealed	...	34	(1)	38	13	1.00
	C71500	Annealed	...	34	(1)	50	18	1.00
Welded Pipe and Tube								
B 467	C70600	Annealed	4 1/2 & under	34	(1)	40	15	0.85
	C70600	Annealed	Over 4 1/2	34	(1)	38	13	0.85
	C71500	Annealed	4 1/2 & under	34	(1)	50	20	0.85
	C71500	Annealed	Over 4 1/2	34	(1)	45	15	0.85
B 608	C61300, C61400	Annealed	4 to 48	35	(1)(6)	70	30	0.80

Copyright ASME International
Provided by IHS under license with ASME
No reproduction or networking permitted without license from IHS
Not for Resale

Table A-6 Copper and Copper Alloys

Maximum Allowable Stress Values in Tension, ksi, for Metal Temperature, °F, Not Exceeding																
−20 to 100	150	200	250	300	350	400	450	500	550	600	650	700	750	800	UNS Alloy No.	Spec. No.
															Seamless Pipe and Tube	
6.0	5.1	4.8	4.8	4.7	4.0	3.0	...	...	...	...	...	...	...	...	C10200, C12000, C12200	B 42
11.3	11.3	11.3	11.3	11.0	10.3	4.3	...	...	...	...	...	...	...	...	C10200, C12000, C12200	
9.0	9.0	9.0	9.0	8.7	8.5	8.2	...	...	...	...	...	...	...	...	C10200, C12000, C12200	
8.0	8.0	8.0	8.0	8.0	7.0	5.0	2.0	...	...	...	...	...	...	...	C23000	B 43
6.0	5.1	4.8	4.8	4.7	4.0	3.0	...	...	...	...	...	...	...	...	C10200, C12000, C12200	B 68
6.0	5.1	4.8	4.8	4.7	4.0	3.0	...	...	...	...	...	...	...	...	C10200, C12000	B 75
9.0	9.0	9.0	9.0	8.7	8.5	8.2	...	...	...	...	...	...	...	...	C10200, C12000	
11.3	11.3	11.3	11.3	11.0	10.3	4.3	...	...	...	...	...	...	...	...	C10200, C12000	
6.0	5.1	4.8	4.8	4.7	4.0	3.0	...	...	...	...	...	...	...	...	C12200	B 75
9.0	9.0	9.0	9.0	8.7	8.5	8.2	...	...	...	...	...	...	...	...	C12200	
11.3	11.3	11.3	11.3	11.0	10.3	4.3	...	...	...	...	...	...	...	...	C12200	
6.0	5.1	4.8	4.8	4.7	4.0	3.0	...	...	...	...	...	...	...	...	C10200, C12000, C12200	B 88
9.0	9.0	9.0	9.0	8.7	8.5	8.2	...	...	...	...	...	...	...	...	C10200, C12000, C12200	
9.0	9.0	9.0	9.0	8.7	8.5	8.2	...	...	...	...	...	...	...	...	C10200, C12000	B 111
11.3	11.3	11.3	11.3	11.0	10.3	4.3	...	...	...	...	...	...	...	...	C10200, C12000	
9.0	9.0	9.0	9.0	8.7	8.5	8.2	...	...	...	...	...	...	...	...	C12200, C14200	
11.3	11.3	11.3	11.3	11.0	10.3	4.3	...	...	...	...	...	...	...	...	C12200, C14200	
8.0	8.0	8.0	8.0	8.0	7.0	5.0	2.0	...	...	...	...	...	...	...	C23000	B 111
12.5	12.5	12.5	12.5	12.5	10.8	5.3	...	...	...	...	...	...	...	...	C28000	
10.0	10.0	10.0	10.0	10.0	9.8	3.5	2.0	...	...	...	...	...	...	...	C44300, C44400, C44500	
12.5	12.4	12.2	11.9	11.6	10.0	6.0	4.0	2.0	...	...	...	...	...	...	C60800	
12.0	11.9	11.8	11.7	11.7	6.5	3.3	1.8	...	...	...	...	...	...	...	C68700	B 111
8.0	8.0	...	...	...	...	...	...	...	...	...	...	...	...	...	C70400	
10.0	10.0	...	...	...	...	...	...	...	...	...	...	...	...	...	C70400	
10.0	9.7	9.5	9.3	9.0	8.7	8.5	8.2	8.0	7.0	6.0	...	...	...	...	C70600	B 111
10.7	10.6	10.5	10.4	10.3	10.1	9.9	9.6	9.3	8.9	8.4	7.7	7.0	...	...	C71000	
12.0	11.6	11.3	11.0	10.8	10.6	10.3	10.1	9.9	9.8	9.6	9.5	9.4	...	...	C71500	
6.0	5.1	4.8	4.8	4.7	4.0	3.0	...	...	...	...	...	...	...	...	C12200	B 280
9.0	9.0	9.0	9.0	8.7	8.5	8.2	...	...	...	...	...	...	...	...	C12200	
9.0	9.0	9.0	9.0	8.7	8.5	8.2	...	...	...	...	...	...	...	...	C12000, C12200	B 302
16.3	16.3	16.3	16.3	16.3	16.3	15.9	15.3	14.7	...	...	...	...	...	...	C61300, C61400	B 315
8.7	8.4	8.3	8.0	7.8	7.7	7.6	7.5	7.3	7.0	6.0	...	...	...	...	C70600	B 466
12.0	11.6	11.3	11.0	10.8	10.6	10.3	10.1	9.9	9.8	9.6	...	...	...	...	C71500	
															Welded Pipe and Tube	
8.5	8.2	8.1	7.9	7.7	7.4	7.2	7.1	6.3	5.7	4.3	...	...	...	...	C70600	B 467
7.4	7.1	7.1	6.8	6.6	6.5	6.5	6.4	6.2	5.7	4.3	...	...	...	...	C70600	
10.6	10.4	10.1	9.9	9.6	9.4	9.2	9.0	8.8	8.7	8.3	...	...	...	...	C71500	
11.3	10.1	9.4	9.3	9.3	9.3	9.3	9.3	9.3	9.3	9.3	...	...	...	...	C71500	
14.0	14.0	14.0	14.0	14.0	14.0	14.0	13.6	13.2	...	...	...	...	...	...	C61300, C61400	B 608

Copyright ASME International
Provided by IHS under license with ASME
No reproduction or networking permitted without license from IHS
Not for Resale

Table A-6 Copper and Copper Alloys (Cont'd)

Spec No.	UNS Alloy No.	Temper or Condition	Size or Thickness, in.	P-No.	Notes	Specified Minimum Tensile, ksi	Specified Minimum Yield, ksi	*E* or *F*
Plate								
B 402	C70600	Annealed	2½ & under	34	(1)	40	15	1.00
	C71500	Annealed	2½ & under	34	(1)	50	20	1.00
	C71500	Annealed	Over 2½ to 5	34	(1)	45	18	1.00
Rod and Bar								
B 151	C71500	Annealed	Over 1	34	(1)	45	18	1.00
Die Forgings (Hot Pressed)								
B 283	C37700	As forged	1½ & under	...	(1)(3)	50	18	1.00
	C37700	As forged	Over 1½	...	(1)(3)	46	15	1.00
Castings								
B 61	C92200	As cast	...	...	...	34	16	0.80
B 62	C83600	As cast	...	...	...	30	14	0.80
B 148	C95200	As cast	...	35	(1)	65	25	0.80
	C95400	As cast	...	35	(1)(5)	75	30	0.80
B 584	C92200	As cast	...	...		34	16	0.80
	C93700	As cast	...	...	(3)	30	12	0.80
	C97600	As cast	...	...	(3)	40	17	0.80
Bolts, Nuts, and Studs								
B 150	C61400	HR50	½ & under	...	(1)(3)	80	50	1.00
	C61400	HR50	Over ½ to 1	...	(1)(3)	75	35	1.00
	C61400	HR50	Over 2 to 3	...	(1)(3)	70	30	1.00

GENERAL NOTES:

(a) The tabulated specifications are ANSI/ASTM or ASTM. For ASME Boiler and Pressure Vessel Code applications, see related specifications in Section II of the ASME Code.

(b) The stress values in this Table may be interpolated to determine values for intermediate temperatures.

(c) The P-Numbers listed in this Table are identical to those adopted by the ASME Boiler and Pressure Vessel Code, Qualification of welding procedures, welders, and welding operators is required and shall comply with the ASME Boiler and Pressure Vessel Code, Section IX, except as modified by para. 127.5.

(d) Tensile strengths and allowable stresses shown in "ksi" are "thousands of pounds per square inch."

(e) The materials listed in this Table shall not be used at design temperatures above those for which allowable stress values are given. However, for saturated steam at 250 psi (406°F), the allowable stress values given for 400°F may be used.

(f) The tabulated stress values are $S \times E$ (weld joint efficiency factor) or $S \times F$ (material quality factor), as applicable. Weld joint efficiency factors are shown in Table 102.4.3.

(g) Pressure-temperature ratings of piping components, as published in standards referenced in this Code, may be used for components meeting the requirements of those standards. The allowable stress values given in this Table are for use in designing piping components which are not manufactured in accordance with referenced standards.

(h) For limitations on the use of copper and copper alloys for flammable liquids and gases, refer to paras. 122.7, 122.8, and 124.7.

(i) The y coefficient = 0.4 [see Table 104.1.2(A)].

Copyright ASME International
Provided by IHS under license with ASME
No reproduction or networking permitted without license from IHS
Not for Resale

Table A-6 Copper and Copper Alloys

Maximum Allowable Stress Values in Tension, ksi, for Metal Temperature, °F, Not Exceeding																
−20 to 100	150	200	250	300	350	400	450	500	550	600	650	700	750	800	UNS Alloy No.	Spec. No.
																Plate
10.1	9.7	9.5	9.3	9.0	8.7	8.5	8.4	8.0	7.0	6.0	...	...	...	...	C70600	B 402
12.5	12.2	11.9	11.6	11.3	11.0	10.8	10.6	10.4	10.2	10.0	9.8	9.7	...	...	C71500	
11.3	10.8	10.5	10.2	9.9	9.7	9.5	9.4	9.3	9.2	9.1	9.0	8.9	...	...	C71500	
																Rod and Bar
11.3	10.8	10.5	10.2	9.9	9.7	9.5	9.4	9.3	9.2	9.1	...	...	...	...	C71500	B 151
																Die Forgings (Hot Pressed)
12.0	11.3	10.9	...	...	...	...	...	...	...	...	...	...	...	...	C37700	B 283
10.0	9.5	9.1	...	...	...	...	...	...	...	...	...	...	...	...	C37700	
																Castings
6.8	6.8	6.8	6.8	6.8	6.8	6.6	6.2	5.8	4.0	...	...	...	...	...	C92200	B 61
6.0	6.0	6.0	6.0	5.8	5.7	5.5	5.4	...	...	...	...	...	...	...	C83600	B 62
12.6	12.6	11.9	11.6	11.4	11.4	11.4	11.4	11.4	...	...	...	...	...	...	C95200	B 148
15.1	15.1	15.0	15.0	15.0	14.5	13.9	12.8	11.1	...	...	...	...	...	...	C95400	
6.8	6.8	6.8	6.8	6.8	6.8	6.6	6.2	5.8	4.0	...	...	...	...	...	C92200	B 584
6.0	6.0	5.8	5.4	5.3	5.2	5.1	...	...	...	...	...	...	...	...	C93700	
6.0	5.8	5.6	5.5	5.4	...	...	...	...	...	...	...	...	...	...	C97600	
																Bolts, Nuts, and Studs
10.0	9.9	9.9	9.8	9.8	9.7	9.6	9.5	9.5	...	...	...	...	...	...	C61400	B 150
8.7	8.7	8.6	8.6	8.5	8.5	8.4	8.3	8.2	...	...	...	...	...	...	C61400	
8.0	8.0	7.9	7.9	7.8	7.8	7.7	7.6	7.5	...	...	...	...	...	...	C61400	

NOTES:

(1) THIS MATERIAL IS NOT ACCEPTABLE FOR USE ON BOILER EXTERNAL PIPING — SEE FIGS. 100.1.2(A) and (B).

(2) This material may be used for Boiler External Piping provided that the nominal size does not exceed 3 in., and the design temperature does not exceed 406°F. This material shall not be used for blowoff piping. Where threaded brass or copper pipe is used for feed water piping, it shall have a wall thickness not less than that required for schedule 80 steel pipe of the same nominal size.

(3) Welding or brazing of this material is not permitted.

(4) When this material is used for welded or brazed construction, the allowable stress values used shall not exceed those given for the same material in the annealed condition.

(5) Castings which are welded or repair welded shall be heat treated at 1150°F–1200°F, followed by moving-air cooling. The required time at temperature is based on the cross section thicknesses as follows:
(a) $1\frac{1}{2}$ hr for the first inch, or fraction thereof;
(b) $\frac{1}{2}$ hr for each additional inch or fraction thereof.

(6) Welds must be made by an electric fusion welding process involving the addition of filler metal.

Copyright ASME International
Provided by IHS under license with ASME
No reproduction or networking permitted without license from IHS
Not for Resale

Table A-7 Aluminum and Aluminum Alloys

Spec No.	UNS Alloy No.	Temper	Size or Thickness, in.	P-No.	Notes	Specified Minimum Tensile, ksi	Specified Minimum Yield, ksi	*E* or *F*
Drawn Seamless Tube								
B 210	A93003	0	0.010 to 0.500	21	(1)	14	5	1.00
	A93003	H14	0.010 to 0.500	21	(1)(3)	20	17	1.00
	Alclad A93003	0	0.010 to 0.500	21	(1)(4)	13	4.5	1.00
	Alclad A93003	H14	0.010 to 0.500	21	(1)(3)(4)	19	16	1.00
B 210	A95050	0	0.018 to 0.500	21	(1)	18	6	1.00
	Alclad A95050	0	0.018 to 0.500	21	(1)(13)(23)	17	...	1.00
	A96061	T4	0.025 to 0.500	23	(1)(6)	30	16	1.00
	A96061	T6	0.025 to 0.500	23	(1)(6)	42	35	1.00
	A96061	T4, T6 welded	0.025 to 0.500	23	(1)(7)	24	...	1.00
Seamless Pipe and Seamless Extruded Tube								
B 241	A93003	0	All	21	(1)	14	5	1.00
	A93003	H18	Less than 1.000	21	(1)(3)	27	24	1.00
	A93003	H112	Note (20)	21	(1)(3)(20)	14	5	1.00
	Alclad A93003	0	All	21	(1)(4)	13	4.5	1.00
	Alclad A93003	H112	All	21	(1)(3)(4)	13	4.5	1.00
B 241	A95083	0	Up thru 5.000	25	(1)(8)	39	16	1.00
	A95083	H112	Up thru 5.000	25	(1)(8)	39	16	1.00
	A95454	0	Up thru 5.000	22	(1)	31	12	1.00
	A95454	H112	Up thru 5.000	22	(1)	31	12	1.00
B 241	A96061	T4	All	23	(1)(6)(9)	26	16	1.00
	A96061	T6	Under 1 in. dia	23	(1)(2)(5)	42	35	1.00
	A96061	T6	All	23	(1)(6)(9)	38	35	1.00
	A96061	T4, T6 welded	All	23	(1)(7)(9)	24	...	1.00
	A96063	T6	Note (10)	23	(1)(6)(10)	30	25	1.00
	A96063	T5, T6 welded	Note (10)	23	(1)(7)(10)	17	...	1.00
Drawn Seamless Condenser and Heat Exchanger Tube								
B 234	A93003	H14	0.010 to 0.200	21	(1)(2)	20	17	1.00
	Alclad A93003	H14	0.010 to 0.200	21	(1)(2)(4)	19	16	1.00
	A95454	H34	0.010 to 0.200	22	(1)(2)	39	29	1.00
B 234	A96061	T4	0.025 to 0.200	23	(1)(6)	30	16	1.00
	A96061	T6	0.025 to 0.200	23	(1)(6)	42	35	1.00
	A96061	T4, T6 welded	0.025 to 0.200	23	(1)(7)	24	...	1.00
Arc-Welded Round Tube								
B 547	A93003	0	0.125 to 0.500	21	(1)(15)	14	5	1.00
	A93003	0	0.125 to 0.500	21	(1)(16)	14	5	0.85
	A93003	H112	0.250 to 0.400	21	(1)(14)(15)	17	10	1.00
	A93003	H112	0.250 to 0.400	21	(1)(14)(16)	17	10	0.85
B 547	Alclad A93003	0	0.125 to 0.499	21	(1)(4)(15)	13	4.5	1.00
	Alclad A93003	0	0.125 to 0.499	21	(1)(4)(16)	13	4.5	0.85
	Alclad A93003	H112	0.250 to 0.499	21	(1)(4)(14)(15)	16	9	1.00
	Alclad A93003	H112	0.250 to 0.499	21	(1)(4)(14)(16)	16	9	0.85

Copyright ASME International
Provided by IHS under license with ASME
No reproduction or networking permitted without license from IHS Not for Resale

Table A-7 Aluminum and Aluminum Alloys

Maximum Allowable Stress Values in Tension, ksi, for Metal Temperature, °F, Not Exceeding								
−20 to 100	150	200	250	300	350	400	UNS Alloy No.	Spec. No.
							Drawn Seamless Tube	
3.4	3.4	3.4	3.0	2.4	1.8	1.4	A93003	B 210
5.0	5.0	5.0	4.9	4.3	3.0	2.4	A93003	
3.0	3.0	3.0	2.7	2.2	1.6	1.3	Alclad A93003	
4.5	4.5	4.5	4.4	3.9	2.7	2.1	Alclad A93003	
4.0	4.0	4.0	4.0	4.0	2.8	1.4	A95050	B210
3.3	3.3	3.3	3.3	3.3	2.5	1.3	Alclad A95050	
7.5	7.5	7.5	7.4	6.9	6.3	4.5	A96061	
10.5	10.5	10.5	9.9	8.4	6.3	4.5	A96061	
6.0	6.0	6.0	5.9	5.5	4.6	3.5	A96061	
							Seamless Pipe and Seamless Extruded Tube	
3.4	3.4	3.4	3.0	2.4	1.8	1.4	A93003	B 241
6.8	6.8	6.7	6.3	5.4	3.5	2.5	A93003	
3.4	3.4	3.4	3.0	2.4	1.8	1.4	A93003	
3.0	3.0	3.0	2.7	2.2	1.6	1.2	Alclad A93003	
3.0	3.0	3.0	2.7	2.2	1.6	1.2	Alclad A93003	
9.8	9.8	. . .	. . .	. . .	. . .	. . .	A95083	B 241
9.8	9.8	. . .	. . .	. . .	. . .	. . .	A95083	
7.8	7.8	7.8	7.4	5.5	4.1	3.0	A95454	
7.8	7.8	7.8	7.4	5.5	4.1	3.0	A95454	
6.5	6.5	6.5	6.4	6.0	5.8	4.5	A96061	B 241
10.5	10.5	10.5	9.9	8.4	6.3	4.5	A96061	
9.5	9.5	9.5	9.1	7.9	6.3	4.5	A96061	
6.0	6.0	6.0	5.9	5.5	4.6	3.5	A96061	
7.5	7.5	7.4	6.8	5.0	3.4	2.0	A96063	
4.3	4.3	4.3	4.2	3.9	3.0	2.0	A96063	
							Drawn Seamless Condenser and Heat Exchanger Tube	
5.0	5.0	5.0	4.9	4.3	3.0	2.4	A93003	B 234
4.5	4.5	4.5	4.4	3.9	2.7	2.1	Alclad A93003	
9.8	9.8	9.8	7.5	5.5	4.1	3.0	A95454	
7.5	7.5	7.5	7.4	6.9	6.3	4.5	A96061	B 234
10.5	10.5	10.5	9.9	8.4	6.3	4.5	A96061	
6.0	6.0	6.0	5.9	5.5	4.6	3.5	A96061	
							Arc-Welded Round Tube	
3.4	3.4	3.4	3.0	2.4	1.8	1.4	A93003	B 547
2.9	2.9	2.9	2.6	2.0	1.5	1.2	A93003	
3.4	3.4	3.4	3.0	2.4	1.8	1.4	A93003	
2.9	2.9	2.9	2.6	2.0	1.5	1.2	A93003	
3.0	3.0	3.0	2.7	2.2	1.6	1.3	Alclad A93003	B 547
2.6	2.6	2.6	2.3	1.9	1.4	1.1	Alclad A93003	
3.0	3.0	3.0	2.7	2.2	1.6	1.3	Alclad A93003	
2.6	2.6	2.6	2.3	1.9	1.4	1.1	Alclad A93003	

Copyright ASME International
Provided by IHS under license with ASME
No reproduction or networking permitted without license from IHS
Not for Resale

Table A-7 Aluminum and Aluminum Alloys (Cont'd)

Spec No.	UNS Alloy No.	Temper	Size or Thickness, in.	P-No.	Notes	Specified Minimum Tensile, ksi	Specified Minimum Yield, ksi	*E* or *F*
Arc-Welded Round Tube (Cont'd)								
B 547	A95083	0	0.125 to 0.500	25	(1)(8)(15)	40	18	1.00
	A95083	0	0.125 to 0.500	25	(1)(8)(16)	40	18	0.85
B 547	A95454	0	0.125 to 0.500	22	(1)(15)	31	12	1.00
	A95454	0	0.125 to 0.500	22	(1)(16)	31	12	0.85
	A95454	H112	0.250 to 0.499	22	(1)(14)(15)	32	18	1.00
	A95454	H112	0.250 to 0.499	22	(1)(14)(16)	32	18	0.85
B 547	A96061	T4	0.125 to 0.249	23	(1)(7)(15)(17)	30	16	1.00
	A96061	T4	0.125 to 0.249	23	(1)(7)(16)(17)	30	16	0.85
	A96061	T451	0.250 to 0.500	23	(1)(7)(15)(17)	30	16	1.00
	A96061	T451	0.250 to 0.500	23	(1)(7)(16)(17)	30	16	0.85
B 547	A96061	T6	0.125 to 0.249	23	(1)(7)(15)(17)	42	35	1.00
	A96061	T6	0.125 to 0.249	23	(1)(7)(16)(17)	42	35	0.85
	A96061	T651	0.250 to 0.500	23	(1)(7)(15)(17)	42	35	1.00
	A96061	T651	0.250 to 0.500	23	(1)(7)(16)(17)	42	35	0.85
Sheet and Plate								
B 209	A93003	0	0.051 to 3.000	21	(1)	14	5	1.00
	A93003	H112	0.250 to 0.499	21	(1)(3)	17	10	1.00
	A93003	H112	0.500 to 2.000	21	(1)(3)	15	6	1.00
B 209	Alclad A93003	0	0.051 to 0.499	21	(1)(4)	13	4.5	1.00
	Alclad A93003	0	0.500 to 3.000	21	(1)(18)	14	5	1.00
	Alclad A93003	H112	0.250 to 0.499	21	(1)(3)(4)	16	9	1.00
	Alclad A93003	H112	0.500 to 2.000	21	(1)(3)(19)	15	6	1.00
B 209	A95083	0	0.051 to 1.500	25	(1)(8)	40	18	1.00
	A95454	0	0.051 to 3.000	22	(1)	31	12	1.00
	A95454	H112	0.250 to 0.499	22	(1)(3)	32	18	1.00
	A95454	H112	0.500 to 3.000	22	(1)(3)	31	12	1.00
B 209	A96061	T4	0.051 to 0.249	23	(1)(6)(9)	30	16	1.00
	A96061	T451	0.250 to 3.000	23	(1)(6)(9)	30	16	1.00
	A96061	T4 welded	0.051 to 0.249	23	(1)(7)(9)	24	...	1.00
	A96061	T451 welded	0.250 to 3.000	23	(1)(7)(9)	24	...	1.00
B 209	A96061	T6	0.051 to 0.249	23	(1)(6)(9)	42	35	1.00
	A96061	T651	0.250 to 4.000	23	(1)(6)(9)	42	35	1.00
	A96061	T651	4.001 to 6.000	23	(1)(6)(9)	40	35	1.00
	A96061	T6 welded	0.051 to 0.249	23	(1)(7)(9)	24	...	1.00
	A96061	T651 welded	0.250 to 6.000	23	(1)(7)(9)	24	...	1.00
Die and Hand Forgings								
B 247	A93003	H112	Up thru 4.000	21	(1)(11)	14	5	1.00
	A93003	H112 welded	Up thru 4.000	21	(1)(7)(11)	14	5	1.00

Copyright ASME International
Provided by IHS under license with ASME
No reproduction or networking permitted without license from IHS Not for Resale

Table A-7 Aluminum and Aluminum Alloys (Cont'd)

Maximum Allowable Stress Values in Tension, ksi, for Metal Temperature, °F, Not Exceeding								
−20 to 100	150	200	250	300	350	400	UNS Alloy No.	Spec. No.
							Arc-Welded Round Tube (Cont'd)	
10.0	10.0	. . .	. . .	. . .	. . .	. . .	A95083	B 547
8.5	8.5	. . .	. . .	. . .	. . .	. . .	A95083	
7.8	7.8	7.8	7.4	5.5	4.1	3.0	A95454	B 547
6.6	6.6	6.6	6.3	4.7	3.5	2.6	A95454	
7.8	7.8	7.8	7.4	5.5	4.1	3.0	A95454	
6.6	6.6	6.6	6.3	4.7	3.5	2.6	A95454	
6.0	6.0	6.0	5.9	5.5	4.6	3.5	A96061	B 547
5.1	5.1	5.1	5.0	4.7	3.9	3.0	A96061	
6.0	6.0	6.0	5.9	5.5	4.6	3.5	A96061	
5.1	5.1	5.1	5.0	4.7	3.9	3.0	A96061	
6.0	6.0	6.0	5.9	5.5	4.6	3.5	A96061	B 547
5.1	5.1	5.1	5.0	4.7	3.9	3.0	A96061	
6.0	6.0	6.0	5.9	5.5	4.6	3.5	A96061	
5.1	5.1	5.1	5.0	4.7	3.9	3.0	A96061	
								Sheet and Plate
3.4	3.4	3.4	3.0	2.4	1.8	1.4	A93003	B 209
4.3	4.3	4.3	4.0	3.6	3.0	2.4	A93003	
3.8	3.8	3.7	3.2	2.4	1.8	1.4	A93003	
3.0	3.0	3.0	2.7	2.2	1.6	1.3	Alclad A93003	B 209
3.0	3.0	3.0	2.7	2.2	1.6	1.3	Alclad A93003	
3.8	3.8	3.8	3.6	3.3	2.7	2.1	Alclad A93003	
3.4	3.4	3.4	2.9	2.2	1.6	1.3	Alclad A93003	
10.0	10.0	. . .	. . .	. . .	. . .	. . .	A95083	B 209
7.8	7.8	7.8	7.4	5.5	4.1	3.0	A95454	
8.0	8.0	8.0	8.0	5.5	4.1	3.0	A95454	
7.8	7.8	7.8	7.4	5.5	4.1	3.0	A95454	
7.5	7.5	7.5	7.4	6.9	6.3	4.5	A96061	B 209
7.5	7.5	7.5	7.4	6.9	6.3	4.5	A96061	
6.0	6.0	6.0	5.9	5.5	4.6	3.5	A96061	
6.0	6.0	6.0	5.9	5.5	4.6	3.5	A96061	
10.5	10.5	10.5	9.9	8.4	6.3	4.5	A96061	B 209
10.5	10.5	10.5	9.9	8.4	6.3	4.5	A96061	
10.0	10.0	10.0	9.6	8.2	6.3	4.4	A96061	
6.0	6.0	6.0	5.9	5.5	4.6	3.5	A96061	
6.0	6.0	6.0	5.9	5.5	4.6	3.5	A96061	
								Die and Hand Forgings
3.4	3.4	3.4	3.0	2.4	1.8	1.4	A93003	B 247
3.4	3.4	3.4	3.0	2.4	1.8	1.4	A93003	

Copyright ASME International
Provided by IHS under license with ASME
No reproduction or networking permitted without license from IHS
Not for Resale

Table A-7 Aluminum and Aluminum Alloys (Cont'd)

Spec No.	UNS Alloy No.	Temper	Size or Thickness, in.	P-No.	Notes	Specified Minimum Tensile, ksi	Specified Minimum Yield, ksi	*E* or *F*
Die and Hand Forgings (Cont'd)								
B 247	A95083	H111	Up thru 4.000	25	(1)(6)(8)	39	16	1.00
	A95083	H112	Up thru 4.000	25	(1)(6)(8)	39	16	1.00
	A95083	H111, H112 welded	Up thru 4.000	25	(1)(7)(8)	38	16	1.00
B 247	A96061	T6	Up thru 4.000	23	(1)(6)(11)	38	35	1.00
	A96061	T6	Up thru 4.000	23	(1)(6)(12)	37	33	1.00
	A96061	T6	4.001 to 8.000	23	(1)(6)(12)	35	32	1.00
	A96061	T6 welded	Up thru 8.000	23	(1)(7)	24	. . .	1.00
Rods, Bars, and Shapes								
B 221	A91060	-0	All	21	(1)(21)(22)	8.5	2.5	1.00
		-H112	All	21	(1)(3)(21)(22)	8.5	2.5	1.00
B 221	A91100	-0	All	21	(1)(21)(22)	11	3	1.00
		-H112	All	21	(1)(3)(21)(22)	11	3	1.00
B 221	A93003	-0	All	21	(1)(21)(22)	14	5	1.00
		-H112	All	21	(1)(3)(21)(22)	14	5	1.00
B 221	A92024	-T3	Up thru 0.249	. . .	(1)(2)(9)(21)(22)	57	42	1.00
			0.250–0.749	. . .	(1)(2)(9)(21)(22)	60	44	1.00
			0.750–1.499	. . .	(1)(2)(9)(21)(22)	65	46	1.00
			1.500 and over	. . .	(1)(2)(9)(21)(22)	68	48	1.00
B 221	A95083	-0	Up thru 5.000	25	(1)(8)(21)(22)	39	16	1.00
		-H111	Up thru 5.000	25	(1)(3)(8)(21)(22)	40	24	1.00
		-H112	Up thru 5.000	25	(1)(3)(8)(21)(22)	39	16	1.00
B 221	A95086	-H112	Up thru 5.000	25	(1)(2)(8)(21)(22)	35	14	1.00
B 221	A95154	-0	All	22	(1)(8)(21)(22)	30	11	1.00
		-H112	All	22	(1)(3)(8)(21)(22)	30	11	1.00
B 221	A95454	-0	Up thru 5.000	22	(1)(21)(22)	31	12	1.00
		-H111	Up thru 5.000	22	(1)(3)(21)(22)	33	19	1.00
		-H112	Up thru 5.000	22	(1)(3)(21)(22)	31	12	1.00
B 221	A95456	-0	Up thru 5.000	25	(1)(8)(21)(22)	41	19	1.00
		-H111	Up thru 5.000	25	(1)(3)(8)(21)(22)	42	26	1.00
		-H112	Up thru 5.000	25	(1)(3)(8)(21)(22)	41	19	1.00
B 221	A96061	-T4	All	23	(1)(2)(9)(21)(22)	26	16	1.00
		-T6	All	23	(1)(2)(9)(21)(22)	38	35	1.00
		-T4 Wld.	All	23	(1)(7)(9)(21)(22)	24	. . .	1.00
		-T6 Wld.	All	23	(1)(7)(9)(21)(22)	24	. . .	1.00

Copyright ASME International
Provided by IHS under license with ASME
No reproduction or networking permitted without license from IHS
Not for Resale

Table A-7 Aluminum and Aluminum Alloys (Cont'd)

Maximum Allowable Stress Values in Tension, ksi, for Metal Temperature, °F, Not Exceeding								
−20 to 100	150	200	250	300	350	400	UNS Alloy No.	Spec. No.
							Die and Hand Forgings (Cont'd)	
9.8	9.8	...	...	...	...	...	A95083	B 247
9.8	9.8	...	...	...	...	...	A95083	
9.5	9.5	...	...	...	...	...	A95083	
9.5	9.5	9.5	9.1	7.9	6.3	4.5	A96061	B 247
9.3	9.3	9.3	8.8	7.7	6.3	4.5	A96061	
8.8	8.8	8.8	8.4	7.4	6.1	4.5	A96061	
6.0	6.0	6.0	5.9	5.5	4.6	3.5	A96061	
							Rods, Bars, and Shapes	
1.7	1.7	1.6	1.5	1.3	1.1	0.80	A91060	B 221
1.7	1.7	1.6	1.5	1.3	1.1	0.80		
2.0	2.0	2.0	2.0	1.8	1.4	1.0	A91100	B 221
2.0	2.0	2.0	2.0	1.8	1.4	1.0		
3.4	3.4	3.4	3.0	2.4	1.8	1.4	A93003	B 221
3.4	3.4	3.4	3.0	2.4	1.8	1.4		
14.3	14.3	14.3	12.6	9.5	6.0	4.2	A92024	B 221
15.0	15.0	15.0	13.2	10.0	6.3	4.4		
16.3	16.3	16.3	14.3	10.8	6.8	4.7		
17.0	17.0	17.0	15.0	11.3	7.1	5.0		
9.8	9.8	...	...	...	...	...	A95083	B 221
10.0	10.0	...	...	...	...	...		
9.8	9.8	...	...	...	...	...		
8.8	8.8	...	...	...	...	...	A95086	B 221
7.5	7.5	...	...	...	...	...	A95154	B 221
7.5	7.5	...	...	...	...	...		
7.8	7.8	7.8	7.4	5.5	4.1	3.0	A95454	B 221
8.3	8.3	8.3	7.5	5.5	4.1	3.0		
7.8	7.8	7.8	7.4	5.5	4.1	3.0		
10.3	10.3	...	...	...	...	...	A95456	B 221
10.5	10.5	...	...	...	...	...		
10.3	10.3	...	...	...	...	...		
6.5	6.5	6.5	6.4	6.0	5.8	4.5	A96061	B 221
9.5	9.5	9.5	9.1	7.9	6.3	4.5		
6.0	6.0	6.0	5.9	5.5	4.6	3.5		
6.0	6.0	6.0	5.9	5.5	4.6	3.5		

Copyright ASME International
Provided by IHS under license with ASME
No reproduction or networking permitted without license from IHS
Not for Resale

Table A-7 Aluminum and Aluminum Alloys (Cont'd)

Spec No.	UNS Alloy No.	Temper	Size or Thickness, in.	P-No.	Notes	Specified Minimum Tensile, ksi	Specified Minimum Yield, ksi	*E* or *F*
Rods, Bars, and Shapes (Cont'd)								
B 221	A96063	-T1	Up thru 0.500	23	(1)(2)(21)(22)	17	9	1.00
			0.501–1.000	23	(1)(2)(21)(22)	16	8	1.00
		-T5	Up thru 0.500	23	(1)(2)(21)(22)	22	16	1.00
			0.501–1.000	23	(1)(2)(21)(22)	21	15	1.00
		-T6	Up thru 1.000	23	(1)(2)(21)(22)	30	25	1.00
		-T5, -T6 Wld.	Up thru 1.000	23	(1)(7)(21)(22)	17	. . .	1.00
Castings								
B 26	A24430	F	. . .	. . .	(1)(2)	17	6	0.80
	A03560	T6	. . .	. . .	(1)(2)	30	20	0.80
	A03560	T71	. . .	. . .	(1)(2)	25	18	0.80

GENERAL NOTES:

(a) The tabulated specifications are ANSI/ASTM or ASTM. For ASME Boiler and Pressure Vessel Code applications, see related specifications in Section II of the ASME Code.

(b) The stress values in this Table may be interpolated to determine values for intermediate temperatures.

(c) The P-Numbers listed in this Table are identical to those adopted by the ASME Boiler and Pressure Vessel Code. Qualification of welding procedures, welders, and welding operators is required and shall comply with the ASME Boiler and Pressure Vessel Code, Section IX, except as modified by para. 127.5.

(d) Tensile strengths and allowable stresses shown in "ksi" are "thousands of pounds per square inch."

(e) The materials listed in this Table shall not be used at design temperatures above those for which allowable stress values are given.

(f) The tabulated stress values are $S \times E$ (weld joint efficiency factor) or $S \times F$ (material quality factor), as applicable. Weld joint efficiency factors are shown in Table 102.4.3.

(g) Pressure-temperature ratings of piping components, as published in standards referenced in this Code, may be used for components meeting the requirements of those standards. The allowable stress values given in this Table are for use in designing piping components which are not manufactured in accordance with referenced standards.

(h) Aluminum and aluminum alloys shall not be used for flammable fluids within the boiler plant structure (see para. 122.7).

(i) The y coefficient $= 0.4$ [see Table 104.1.2(A)].

NOTES:

(1) THIS MATERIAL IS NOT ACCEPTABLE FOR USE ON BOILER EXTERNAL PIPING — SEE FIGS. 100.1.2(A) and (B).

(2) These allowable stress values are not applicable when either welding or thermal cutting is employed.

(3) These allowable stress values are not applicable when either welding or thermal cutting is employed. In such cases, the corresponding stress values for the 0 temper shall be used.

(4) These allowable stress values are 90% of those for the corresponding core material.

(5) These allowable stress values apply only to seamless pipe smaller than NPS 1 which is extruded and then drawn.

(6) These allowable stress values are not applicable when either welding or thermal cutting is employed. In such cases, the corresponding stress values for the welded condition shall be used.

Copyright ASME International
Provided by IHS under license with ASME
No reproduction or networking permitted without license from IHS Not for Resale

Table A-7 Aluminum and Aluminum Alloys (Cont'd)

Maximum Allowable Stress Values in Tension, ksi, for Metal Temperature, °F, Not Exceeding								
−20 to 100	150	200	250	300	350	400	UNS Alloy No.	Spec. No.
							Rods, Bars, and Shapes (Cont'd)	
4.3	4.3	4.3	4.2	4.2	3.4	2.0	A96063	B 221
4.0	4.0	4.0	4.0	4.0	3.4	2.0		
5.5	5.5	5.4	5.1	4.6	3.4	2.0		
5.3	5.3	5.1	4.9	4.3	3.4	2.0		
7.5	7.5	7.4	6.8	5.0	3.4	2.0		
4.3	4.3	4.3	4.2	3.9	3.0	2.0		
								Castings
3.2	3.2	3.2	3.0	2.8	2.5	2.2	A24430	B 26
6.0	6.0	6.0	5.0	. . .	. . .	. . .	A03560	
5.0	5.0	5.0	4.9	4.3	3.3	1.9	A03560	

NOTES (Cont'd):

(7) The strength of a reduced-section tensile specimen is required to qualify welding procedures. Refer to the ASME Boiler and Pressure Vessel Code, Section IX, QW-150.

(8) Refer to the ASME Boiler and Pressure Vessel Code, Section VIII, Part UNF, NF-13(b) regarding stress corrosion.

(9) For stress relieved tempers (T351, T3510, T3511, T451, T4510, T4511, T651, T6510, and T6511) stress values for the material in the basic temper shall be used.

(10) These allowable stress values apply to all thicknesses of and sizes of seamless pipe. They also apply to seamless extruded tube in thicknesses up to and including 1.000 in.

(11) These allowable stress values are for die forgings.

(12) These allowable stress values are for hand forgings.

(13) For temperatures up to 300°F, these allowable stress values are 83% of those for the corresponding core material. At temperatures of 350°F and 400°F, these allowable stress values are 90% of those for the corresponding core material.

(14) These allowable stress values are for the tempers listed in the welded condition and are identical to those for the 0 temper.

(15) These allowable stress values are based on 100% radiography of the longitudinal weld in accordance with ASTM B 547, para. 11.

(16) These allowable stress values are based on spot radiography of the longitudinal weld in accordance with ASTM B 547, para. 11.

(17) These allowable stress values are for the heat treated tempers listed in the welded condition.

(18) The tension test specimen from plate which is not less than 0.500 in. thick is machined from the core and does not include the cladding alloy. Therefore, the allowable stress values for thicknesses less than 0.500 in. shall be used.

(19) The tension test specimen from plate which is not less than 0.500 in thick is machined from the core and does not include the cladding alloy. Therefore, these allowable stress values are 90% of those for the core material of the same thickness.

(20) The allowable stress values for seamless pipe in sizes NPS 1 and larger are as follows:

100 °F	3.5 ksi
150 °F	3.5 ksi
200 °F	3.4 ksi

(21) Stress values in restricted shear such as dowel bolts, or similar construction in which the shearing member is so restricted that the section under consideration would fail without reduction of areas shall be 0.80 times the values in the above Table.

(22) Stress values in bearing shall be 1.60 times the values in the above Table.

(23) ASTM B 210 does not include this alloy/grade of material.

Copyright ASME International
Provided by IHS under license with ASME
No reproduction or networking permitted without license from IHS Not for Resale

Table A-8 Temperatures 1,200°F and Above

Spec. No.	Type or Grade	UNS Alloy No.	Temper	Nominal Composition	P-No.	Notes	Specified Minimum Tensile, ksi	Specified Minimum Yield, ksi
Seamless Pipe and Tube								
A 213	TP304H	S30409	...	18Cr–8Ni	8	...	75	30
	...	S30815	...	21Cr–11Ni–N	8	(1)	87	45
	TP310H	S31009	...	25Cr–20Ni	8	(2)(4)	75	30
	TP316H	S31609	...	16Cr–12Ni–2Mo	8	...	75	30
A 213	TP321H	S32109	...	18Cr–10Ni–Ti	8	...	75	30
	TP347H	S34709	...	18Cr–10Ni–Cb	8	...	75	30
	TP348H	S34809	...	18Cr–10Ni–Cb	8	...	75	30
A 312	TP304H	S30409	...	18Cr–8Ni	8	...	75	30
	...	S30815	...	21Cr–11Ni–N	8	(1)	87	45
	TP310H	S31009	...	25Cr–20Ni	8	(2)(4)	75	30
	TP316H	S31609	...	16Cr–12Ni–2Mo	8	...	75	30
A 312	TP321H	S32109	...	18Cr–10Ni-Ti	8	...	75	30
	TP347H	S34709	...	18Cr–10Ni–Cb	8	...	75	30
	TP348H	S34809	...	18Cr–10Ni–Cb	8	...	75	30
A 376	TP304H	S30409	...	18Cr–8Ni	8	...	75	30
	TP316H	S31609	...	16Cr–12Ni–2Mo	8	...	75	30
	TP321H	S32109	...	18Cr–10Ni–Ti	8	...	75	30
	TP347H	S34709	...	18Cr–10Ni–Cb	8	...	75	30
A 430	FP304H	S30409	...	18Cr–8Ni	8	...	70	30
	FP316H	S31609	...	16Cr–12Ni–2Mo	8	...	70	30
	FP321H	S32109	...	18Cr–10Ni–Ti	8	...	70	30
	FP347H	S34709	...	18Cr–10Ni–Cb	8	...	70	30
B 163	...	N08800	Annealed	Ni–Cr–Fe	45	(1)	75	30
	...	N08810	Annealed	Ni–Cr–Fe	45	(1)	65	25
B 407	...	N08800	C.D./Ann.	Ni–Cr–Fe	45	...	75	30
	...	N08810	Annealed	Ni–Cr–Fe	45	...	65	25
Welded Pipe and Tube — Without Filler Metal								
A 249	TP304H	S30409	...	18Cr–8Ni	8	...	75	35
	...	S30815	...	21Cr–11Ni–N	8	(1)	87	45
	TP310H	S31009	...	25Cr–20Ni	8	(1)(2)(4)	75	35
	TP316H	S31609	...	16Cr–12Ni–2Mo	8	...	75	35
A 249	TP321H	S32109	...	18Cr–10Ni–Ti	8	...	75	35
	TP347H	S34709	...	18Cr–10Ni–Cb	8	...	75	35
	TP348H	S34809	...	18Cr–10Ni–Cb	8	...	75	35
A 312	TP304H	S30409	...	18Cr–8Ni	8	...	75	30
	...	S30815	...	21Cr–11Ni–N	8	(1)	87	45
	TP310H	S31009	...	25Cr–20Ni	8	(2)(4)	75	30
	TP316H	S31609	...	16Cr–12Ni–2Mo	8	...	75	30

Copyright ASME International
Provided by IHS under license with ASME
No reproduction or networking permitted without license from IHS Not for Resale

Table A-8 Temperatures 1,200°F and Above

E or *F*	Maximum Allowable Stress Values in Tension, ksi, for Metal Temperature, °F, Not Exceeding							Type or Grade	Spec. No.
	1200	1250	1300	1350	1400	1450	1500		
								Seamless Pipe and Tube	
1.00	6.1	4.7	3.7	2.9	2.3	1.8	1.4	TP304H	A 213
1.00	5.2	4.0	3.1	2.4	1.9	1.6	1.3	. . .	
1.00	4.0	3.0	2.2	1.7	1.3	0.97	0.75	TP310H	
1.00	7.4	5.5	4.1	3.1	2.3	1.7	1.3	TP316H	
1.00	5.4	4.1	3.2	2.5	1.9	1.5	1.1	TP321H	A 213
1.00	7.9	5.9	4.4	3.2	2.5	1.8	1.3	TP347H	
1.00	7.9	5.9	4.4	3.2	2.5	1.8	1.3	TP348H	
1.00	6.1	4.7	3.7	2.9	2.3	1.8	1.4	TP304H	A 312
1.00	5.2	4.0	3.1	2.4	1.9	1.6	1.3	. . .	
1.00	4.0	3.0	2.2	1.7	1.3	0.97	0.75	TP310H	
1.00	7.4	5.5	4.1	3.1	2.3	1.7	1.3	TP316H	
1.00	5.4	4.1	3.2	2.5	1.9	1.5	1.1	TP321H	A 312
1.00	7.9	5.9	4.4	3.2	2.5	1.8	1.3	TP347H	
1.00	7.9	5.9	4.4	3.2	2.5	1.8	1.3	TP348H	
1.00	6.1	4.7	3.7	2.9	2.3	1.8	1.4	TP304	A 376
1.00	7.4	5.5	4.1	3.1	2.3	1.7	1.3	TP316H	
1.00	5.4	4.1	3.2	2.5	1.9	1.5	1.1	TP321H	
1.00	7.9	5.9	4.4	3.2	2.5	1.8	1.3	TP347H	
1.00	6.1	4.7	3.7	2.9	2.3	1.8	1.4	FP304H	A 430
1.00	7.4	5.5	4.1	3.1	2.3	1.7	1.3	FP316H	
1.00	5.4	4.1	3.2	2.5	1.9	1.5	1.1	FP321H	
1.00	7.9	5.9	4.4	3.2	2.5	1.8	1.3	FP347H	
1.00	6.6	4.2	2.0	1.6	1.1	1.0	0.80	N08800	B 163
1.00	7.4	5.9	4.7	3.8	3.0	2.4	1.9	N08810	
1.00	6.6	4.2	2.0	1.6	1.1	1.0	0.80	N08800	B 407
1.00	7.4	5.9	4.7	3.8	3.0	2.4	1.9	N08810	
								Welded Pipe and Tube — Without Filler Metal	
0.85	5.2	4.0	3.2	2.5	2.0	1.6	1.2	TP304H	A 249
0.85	4.4	3.4	2.6	2.0	1.6	1.4	1.1	. . .	
0.85	3.4	2.6	1.9	1.4	1.1	0.82	0.64	TP310H	
0.85	6.3	4.7	3.5	2.6	1.9	1.5	1.1	TP316H	
0.85	4.6	3.5	2.7	2.1	1.6	1.3	1.0	TP321H	A 249
0.85	6.7	5.0	3.7	2.7	2.1	1.6	1.1	TP347H	
0.85	6.7	5.0	3.7	2.7	2.1	1.6	1.1	TP348H	
0.85	5.2	4.0	3.2	2.5	2.0	1.6	1.2	TP304H	A 312
0.85	4.4	3.4	2.6	2.0	1.6	1.4	1.1	. . .	
0.85	3.4	2.6	1.9	1.4	1.1	0.82	0.64	TP310H	
0.85	6.3	4.7	3.5	2.6	1.9	1.5	1.1	TP316H	

Copyright ASME International
Provided by IHS under license with ASME
No reproduction or networking permitted without license from IHS
Not for Resale

Table A-8 Temperatures 1,200°F and Above (Cont'd)

Spec. No.	Type or Grade	UNS Alloy No.	Temper	Nominal Composition	P-No.	Notes	Specified Minimum Tensile, ksi	Specified Minimum Yield, ksi
Welded Pipe and Tube — Without Filler Metal (Cont'd)								
A 312	TP321H	S32109	...	18Cr–10Ni–Ti	8	...	75	30
	TP347H	S32709	...	18Cr–10Ni–Cb	8	...	75	30
A 409	...	S30815	...	21Cr–11Ni–N	8	(1)	87	45
Welded Pipe and Tube — Filler Metal Added								
A 358	1 & 3	S30815	...	21Cr–11Ni–N	8	(1)	87	45
	2	S30815	...	21Cr–11Ni–N	8	(1)	87	45
A 409	...	S30815	...	21Cr–11Ni–N	8	(1)	87	45
Plate								
A 240	304	S30400	...	18Cr–8Ni	8	(2)(3)	75	30
	...	S30815	...	21Cr–11Ni–N	8	(1)	87	45
	310S	S31008	...	25Cr–20Ni	8	(2)(3)(4)	75	30
	316	S31600	...	16Cr–12Ni–2Mo	8	(2)(3)	75	30
	316L	S31603	...	16Cr–12Ni–2Mo	8	(1)	70	25
A 240	321	S32100	...	18Cr–10Ni–Ti	8	(2)(3)	75	30
	347	S34700	...	18Cr–10Ni–Cb	8	(2)(3)	75	30
	348	S34800	...	18Cr–10Ni–Cb	8	(1)(2)(3)	75	30
B 409	...	N08800	Annealed	Ni–Cr–Fe	45	(3)	75	30
	...	N08810	Annealed	Ni–Cr–Fe	45	(3)	65	25
Bars, Rods, and Shapes								
A 479	...	S30815	...	21Cr–11Ni–N	8	(1)	87	45
B 408	...	N08800	Annealed	Ni–Cr–Fe	45	...	75	30
	...	N08810	Annealed	Ni–Cr–Fe	45	...	65	25
Forgings								
A 182	F304H	S30409	...	18Cr–8Ni	8	...	75	30
	...	S30815	...	21Cr–11Ni–N	8	(1)	87	45
	F310H	S31009	...	25Cr–20Ni	8	(1)(2)(4)	75	30
	F316H	S31609	...	16Cr–12Ni–2Mo	8	...	75	30
A 182	F321H	S32109	...	18Cr–10Ni–Ti	8	...	75	30
	F347H	S34709	...	18Cr–10Ni–Cb	8	...	75	30
	F348H	S34809	...	18Cr–10Ni–Cb	8	...	75	30
B 564	...	N08800	Annealed	Ni–Cr–Fe	45	...	75	30
	...	N08810	Annealed	Ni–Cr–Fe	45	...	65	25
Fittings (Seamless and Welded)								
A 403	WP304H	S30409	...	18Cr–8Ni	8	(1)	75	30
	WP316H	S31609	...	16Cr–12Ni–2Mo	8	(1)	75	30
	WP321H	S32109	...	18Cr–10Ni–Ti	8	(1)	75	30
	WP347H	S34709	...	18Cr–10Ni–Cb	8	(1)	75	30
	WP348H	S34809	...	18Cr–10Ni–Cb	8	(1)	75	30

Copyright ASME International
Provided by IHS under license with ASME
No reproduction or networking permitted without license from IHS Not for Resale

Table A-8 Temperatures 1,200°F and Above (Cont'd)

E or *F*	Maximum Allowable Stress Values in Tension, ksi, for Metal Temperature, °F, Not Exceeding							Type or Grade	Spec. No.
	1200	1250	1300	1350	1400	1450	1500		
								Welded Pipe and Tube — Without Filler Metal (Cont'd)	
0.85	4.6	3.5	2.7	2.1	1.6	1.3	1.0	TP321H	A 312
0.85	6.7	5.0	3.7	2.7	2.1	1.6	1.1	TP347H	
0.85	4.4	3.4	2.6	2.0	1.6	1.4	1.1	. . .	A 409
								Welded Pipe and Tube — Filler Metal Added	
1.00	5.2	4.0	3.1	2.4	1.9	1.6	1.3	1 & 3	A 358
0.90	4.7	3.6	2.8	2.2	1.7	1.4	1.2	2	
0.80	4.2	3.2	2.5	1.9	1.5	1.3	1.0	. . .	A 409
								Plate	
1.00	6.1	4.7	3.7	2.9	2.3	1.8	1.4	304	A 240
1.00	5.2	4.0	3.1	2.4	1.9	1.6	1.3	. . .	
1.00	2.5	1.5	0.80	0.50	0.40	0.30	0.20	310S	
1.00	7.4	5.5	4.1	3.1	2.3	1.7	1.3	316	
1.00	6.4	4.7	3.5	2.5	1.8	1.3	1.0	316L	
1.00	3.6	2.6	1.7	1.1	0.80	0.50	0.30	321	A 240
1.00	4.4	3.3	2.2	1.5	1.2	0.90	0.80	347	
1.00	4.4	3.3	2.2	1.5	1.2	0.90	0.80	348	
1.00	6.6	4.2	2.0	1.6	1.1	1.0	0.80	N08800	B 409
1.00	7.4	5.9	4.7	3.8	3.0	2.4	1.9	N08810	
								Bars, Rods, and Shapes	
1.00	5.2	4.0	3.1	2.4	1.9	1.6	1.3	. . .	A 479
1.00	6.6	4.2	2.0	1.6	1.1	1.0	0.80	N08800	B 408
1.00	7.4	5.9	4.7	3.8	3.0	2.4	1.9	N08810	
								Forgings	
1.00	6.1	4.7	3.7	2.9	2.3	1.8	1.4	F304H	A 182
1.00	5.2	4.0	3.1	2.4	1.9	1.6	1.3	. . .	
1.00	4.0	3.0	2.2	1.7	1.3	0.97	0.75	F310H	
1.00	7.4	5.5	4.1	3.1	2.3	1.7	1.3	F316H	
1.00	5.4	4.1	3.2	2.5	1.9	1.5	1.1	F321H	A 182
1.00	7.9	5.9	4.4	3.2	2.5	1.8	1.3	F347H	
1.00	7.9	5.9	4.4	3.2	2.5	1.8	1.3	F348H	
1.00	6.6	4.2	2.0	1.6	1.1	1.0	0.80	N08800	B 564
1.00	7.4	5.9	4.7	3.8	3.0	2.4	1.9	N08810	
								Fittings (Seamless and Welded)	
1.00	6.1	4.7	3.7	2.9	2.3	1.8	1.4	WP304H	A 403
1.00	7.4	5.5	4.1	3.1	2.3	1.7	1.3	WP316H	
1.00	5.4	4.1	3.2	2.5	1.9	1.5	1.1	WP321H	
1.00	7.9	5.9	4.4	3.2	2.5	1.8	1.3	WP347H	
1.00	7.9	5.9	4.4	3.2	2.5	1.8	1.3	WP348H	

Copyright ASME International
Provided by IHS under license with ASME
No reproduction or networking permitted without license from IHS
Not for Resale

Table A-8 Temperatures 1,200°F and Above (Cont'd)

GENERAL NOTES:

(a) The tabulated specifications are ANSI/ASTM or ASTM. For ASME Boiler and Pressure Vessel Code applications, see related specifications in Section II of the ASME Code.

(b) The stress values in this Table may be interpolated to determine values for intermediate temperatures.

(c) The P-Numbers listed in this Table are identical to those adopted by the ASME Boiler and Pressure Vessel Code. Qualification of welding procedures, welders, and welding operators is required and shall comply with the ASME Boiler and Pressure Vessel Code, Section IX, except as modified by para. 127.5.

(d) Tensile strengths and allowable stresses shown in "ksi" are "thousands of pounds per square inch."

(e) The materials listed in this Table shall not be used at design temperatures above those for which allowable stress values are given.

(f) The tabulated stress values are $S \times E$ (weld joint efficiency factor) or $S \times F$ (material quality factor), as applicable. Weld joint efficiency factors are shown in Table 102.4.3.

(g) Pressure-temperature ratings of piping components, as published in standards referenced in this Code, may be used for components meeting the requirements of those standards. The allowable stress values given in this Table are for use in designing piping components which are not manufactured in accordance with referenced standards.

(h) All the materials listed are classified as austenitic [see Table 104.1.2(A)].

--`,,```,,,,````-`-`,,`,,`,`,,`---

Copyright ASME International
Provided by IHS under license with ASME
No reproduction or networking permitted without license from IHS Not for Resale

Table A-8 Temperatures 1,200°F and Above (Cont'd)

NOTES:

(1) THIS MATERIAL IS NOT ACCEPTABLE FOR USE ON BOILER EXTERNAL PIPING — SEE FIGS. 100.1.2(A) and (B).

(2) These allowable stress values shall be used only if the carbon content of the material is 0.04% or higher.

(3) These allowable stress values tabulated shall be used only if the material is heat treated by heating to a minimum temperature of 1900°F and quenching in water or rapidly cooling by other means.

(4) These allowable stress values shall be used only when the grain size of the material is ASTM No. 6 or coarser.

Copyright ASME International
Provided by IHS under license with ASME
No reproduction or networking permitted without license from IHS
Not for Resale

Table A-9 Titanium and Titanium Alloys

Spec No.	Grade	Condition	Nominal Composition	P-No.	Notes	Specified Minimum Tensile, ksi	Specified Minimum Yield, ksi	*E* or *F*
Seamless Pipe and Tube								
B 337	1	Annealed	Ti	51	(1)	35	25	1.00
	2	Annealed	Ti	51	(1)	50	40	1.00
	3	Annealed	Ti	52	(1)	65	55	1.00
	7	Annealed	Ti–Pd	51	(1)	50	40	1.00
	12	Annealed	Ti–Mo–Ni	52	(1)	70	50	1.00
B 338	1	Annealed	Ti	51	(1)	35	25	1.00
	2	Annealed	Ti	51	(1)	50	40	1.00
	3	Annealed	Ti	52	(1)	65	55	1.00
	7	Annealed	Ti–Pd	51	(1)	50	40	1.00
	12	Annealed	Ti–Mo–Ni	52	(1)	70	50	1.00
Welded Pipe and Tube								
B 337	1	Annealed	Ti	51	(1)(2)	35	25	0.85
	2	Annealed	Ti	51	(1)(2)	50	40	0.85
	3	Annealed	Ti	52	(1)(2)	65	55	0.85
	7	Annealed	Ti–Pd	51	(1)(2)	50	40	0.85
	12	Annealed	Ti–Mo–Ni	52	(1)(2)	70	50	0.85
B 338	1	Annealed	Ti	51	(1)(2)	35	25	0.85
	2	Annealed	Ti	51	(1)(2)	50	40	0.85
	3	Annealed	Ti	52	(1)(2)	65	55	0.85
	7	Annealed	Ti–Pd	51	(1)(2)	50	40	0.85
	12	Annealed	Ti–Mo–Ni	52	(1)(2)	70	50	0.85
Plate, Sheet, and Strip								
B 265	1	Annealed	Ti	51	(1)	35	25	1.00
	2	Annealed	Ti	51	(1)	50	40	1.00
	3	Annealed	Ti	52	(1)	65	55	1.00
	7	Annealed	Ti–Pd	51	(1)	50	40	1.00
	12	Annealed	Ti–Mo–Ni	52	(1)	70	50	1.00
Forgings								
B 381	F1	Annealed	Ti	51	(1)	35	25	1.00
	F2	Annealed	Ti	51	(1)	50	40	1.00
	F3	Annealed	Ti	52	(1)	65	55	1.00
	F7	Annealed	Ti–Pd	51	(1)	50	40	1.00
	F12	Annealed	Ti–Mo–Ni	52	(1)	70	50	1.00

--`,,```,,,,````-`-`,,`,,`,`,,`---
Copyright ASME International
Provided by IHS under license with ASME
No reproduction or networking permitted without license from IHS
Not for Resale

Table A-9 Titanium and Titanium Alloys

Maximum Allowable Stress Values in Tension, ksi, for Metal Temperature, °F, Not Exceeding												
−20 to 100	150	200	250	300	350	400	450	500	550	600	Grade	Spec. No.
											Seamless Pipe and Tube	
8.8	8.1	7.3	6.5	5.8	5.2	4.8	4.5	4.1	3.6	3.1	1	B 337
12.5	12.0	10.9	9.9	9.0	8.4	7.7	7.2	6.6	6.2	5.7	2	
16.3	15.6	14.3	13.0	11.7	10.4	9.3	8.3	7.5	6.7	6.0	3	
12.5	12.0	10.9	9.9	9.0	8.4	7.7	7.2	6.6	6.2	5.7	7	
17.5	17.5	16.4	15.2	14.2	13.3	12.5	11.9	11.4	11.1	10.8	12	
8.8	8.1	7.3	6.5	5.8	5.2	4.8	4.5	4.1	3.6	3.1	1	B 338
12.5	12.0	10.9	9.9	9.0	8.4	7.7	7.2	6.6	6.2	5.7	2	
16.3	15.6	14.3	13.0	11.7	10.4	9.3	8.3	7.5	6.7	6.0	3	
12.5	12.0	10.9	9.9	9.0	8.4	7.7	7.2	6.6	6.2	5.7	7	
17.5	17.5	16.4	15.2	14.2	13.3	12.5	11.9	11.4	11.1	10.8	12	
											Welded Pipe and Tube	
7.5	6.9	6.2	5.5	4.9	4.4	4.1	3.8	3.5	3.1	2.6	1	B 337
10.6	10.2	9.3	8.4	7.7	7.1	6.5	6.1	5.6	5.3	4.8	2	
13.8	13.3	12.1	11.1	10.0	8.8	7.9	7.1	6.4	5.7	5.1	3	
10.6	10.2	9.3	8.4	7.7	7.1	6.5	6.1	5.6	5.3	4.8	7	
14.9	14.9	13.9	12.9	12.1	11.3	10.6	10.1	9.7	9.4	9.2	12	
7.5	6.9	6.2	5.5	4.9	4.4	4.1	3.8	3.5	3.1	2.6	1	B 338
10.6	10.2	9.3	8.4	7.7	7.1	6.5	6.1	5.6	5.3	4.8	2	
13.8	13.3	12.1	11.1	10.0	8.8	7.9	7.1	6.4	5.7	5.1	3	
10.6	10.2	9.3	8.4	7.7	7.1	6.5	6.1	5.6	5.3	4.8	7	
14.9	14.9	13.9	12.9	12.1	11.3	10.6	10.1	9.7	9.4	9.2	12	
											Plate, Sheet, and Strip	
8.8	8.1	7.3	6.5	5.8	5.2	4.8	4.5	4.1	3.6	3.1	1	B 265
12.5	12.0	10.9	9.9	9.0	8.4	7.7	7.2	6.6	6.2	5.7	2	
16.3	15.6	14.3	13.0	11.7	10.4	9.3	8.3	7.5	6.7	6.0	3	
12.5	12.0	10.9	9.9	9.0	8.4	7.7	7.2	6.6	6.2	5.7	7	
17.5	17.5	16.4	15.2	14.2	13.3	12.5	11.9	11.4	11.1	10.8	12	
											Forgings	
8.8	8.1	7.3	6.5	5.8	5.2	4.8	4.5	4.1	3.6	3.1	F1	B 381
12.5	12.0	10.9	9.9	9.0	8.4	7.7	7.2	6.6	6.2	5.7	F2	
16.3	15.6	14.3	13.0	11.7	10.4	9.3	8.3	7.5	6.7	6.0	F3	
12.5	12.0	10.9	9.9	9.0	8.4	7.7	7.2	6.6	6.2	5.7	F7	
17.5	17.5	16.4	15.2	14.2	13.3	12.5	11.9	11.4	11.1	10.8	F12	

Copyright ASME International
Provided by IHS under license with ASME
No reproduction or networking permitted without license from IHS
Not for Resale

Table A-9 Titanium and Titanium Alloys (Cont'd)

Spec No.	Grade	Condition	Nominal Composition	P-No.	Notes	Specified Minimum Tensile, ksi	Specified Minimum Yield, ksi	*E* or *F*
Bars and Billets								
B 348	1	Annealed	Ti	51	(1)	35	25	1.00
	2	Annealed	Ti	51	(1)	50	40	1.00
	3	Annealed	Ti	52	(1)	65	55	1.00
	7	Annealed	Ti–Pd	51	(1)	50	40	1.00
	12	Annealed	Ti–Mo–Ni	52	(1)	70	50	1.00
Castings								
B 367	C-2	As-cast	Ti	50	(1)(3)	50	40	0.80

GENERAL NOTES:

(a) The tabulated specifications are ANSI/ASTM or ASTM. For ASME Boiler and Pressure Vessel Code applications, see related specifications in Section II of the ASME Code.

(b) The stress values in this Table may be interpolated to determine values for intermediate temperatures.

(c) The P-Numbers listed in this Table are identical to those adopted by the ASME Boiler and Pressure Vessel Code. Qualification of welding procedures, welders, and welding operators is required and shall comply with the ASME Boiler and Pressure Vessel Code, Section IX, except as modified by para. 127.5.

(d) Tensile strengths and allowable stresses shown in "ksi" are "thousands of pounds per square inch."

(e) The materials listed in this Table shall not be used at design temperatures above those for which allowable stress values are given.

(f) The tabulated stress values are $S \times E$ (weld joint efficiency factor) or $S \times F$ (material quality factor), as applicable. Weld joint efficiency factors are shown in Table 102.4.3.

(g) Pressure-temperature ratings of piping components, as published in standards referenced in this Code, may be used for components meeting the requirements of those standards. The allowable stress values given in this Table are for use in designing piping components which are not manufactured in accordance with referenced standards.

(h) The y coefficient $= 0.4$ [see Table 104.1.2(A)].

Copyright ASME International
Provided by IHS under license with ASME
No reproduction or networking permitted without license from IHS Not for Resale

Table A-9 Titanium and Titanium Alloys (Cont'd)

Maximum Allowable Stress Values in Tension, ksi, for Metal Temperature, °F, Not Exceeding												
−20 to 100	150	200	250	300	350	400	450	500	550	600	Grade	Spec. No.
												Bars and Billets
8.8	8.1	7.3	6.5	5.8	5.2	4.8	4.5	4.1	3.6	3.1	1	B 348
12.5	12.0	10.9	9.9	9.0	8.4	7.7	7.2	6.6	6.2	5.7	2	
16.3	15.6	14.3	13.0	11.7	10.4	9.3	8.3	7.5	6.7	6.0	3	
12.5	12.0	10.9	9.9	9.0	8.4	7.7	7.2	6.6	6.2	5.7	7	
17.5	17.5	16.4	15.2	14.2	13.3	12.5	11.9	11.4	11.1	10.8	12	
												Castings
10.0	9.1	8.2	7.4	7.0	6.2	. . .	. . .	. . .	. . .	. . .	C-2	B 367

NOTES:
(1) THIS MATERIAL IS NOT ACCEPTABLE FOR USE ON BOILER EXTERNAL PIPING — SEE FIGS. 100.1.2(A) and (B).
(2) Filler metal shall not be used in the manufacture of welded pipe or tubing.
(3) Welding of this material is not permitted.

Copyright ASME International
Provided by IHS under license with ASME
No reproduction or networking permitted without license from IHS
Not for Resale

MANDATORY APPENDIX B

Begins on next page.

Copyright ASME International
Provided by IHS under license with ASME
No reproduction or networking permitted without license from IHS
Not for Resale

Copyright ASME International
Provided by IHS under license with ASME
No reproduction or networking permitted without license from IHS

Table B-1 Thermal Expansion Data

A = Mean Coefficient of Thermal Expansion, 10^{-6}in./in./°F

B = Linear Thermal Expansion, in./100 ft

in Going From 70°F to Indicated Temperature [Note (1)]

Material	Coefficient	Temperature Range 70°F to −325	−150	−50	70	200	300	400	500	600	700	800	900	1000	1100	1200	1300	1400
Group 1 carbon and low alloy steels [Note (2)]	*A*	5.5	5.9	6.2	6.4	6.7	6.9	7.1	7.3	7.4	7.6	7.8	7.9	8.1	8.2	8.3	8.4	8.4
	B	−2.6	−1.6	−0.9	0	1.0	1.9	2.8	3.7	4.7	5.7	6.8	7.9	9.0	10.1	11.3	12.4	14.7
Group 2 low alloy steels [Note (3)]	*A*	6.0	6.5	6.7	7.0	7.3	7.4	7.6	7.7	7.8	7.9	8.1	8.1	8.2	8.3	8.4	8.4	8.5
	B	−2.9	−1.7	−1.0	0	1.1	2.1	3.0	4.0	5.0	6.0	7.1	8.1	9.2	10.3	11.4	12.4	14.8
5Cr–1Mo steels	*A*	5.6	6.0	6.2	6.4	6.7	6.9	7.0	7.1	7.2	7.3	7.3	7.4	7.5	7.6	7.6	7.7	7.8
	B	−2.7	−1.6	−0.9	0	1.1	1.9	2.8	3.6	4.6	5.5	6.4	7.4	8.4	9.4	10.4	11.4	12.4
9Cr–1Mo steels	*A*	5.0	5.4	5.6	5.8	6.0	6.2	6.3	6.4	6.5	6.6	6.7	6.8	6.9	7.0	7.1	7.2	7.2
	B	−2.4	−1.4	−0.8	0	0.9	1.7	2.5	3.3	4.1	5.0	5.9	6.8	7.7	8.7	9.6	10.6	11.6
Straight chromium stainless steels																		
12Cr to 13Cr steels	*A*	5.1	5.5	5.7	5.9	6.2	6.3	6.4	6.5	6.5	6.6	6.7	6.7	6.8	6.8	6.9	6.9	7.0
	B	−2.4	−1.5	−0.8	0	1.0	1.7	2.5	3.3	4.2	5.0	5.8	6.7	7.6	8.4	9.3	10.2	10.6
15Cr to 17Cr steels	*A*	4.5	4.9	5.1	5.3	5.5	5.7	5.8	5.9	6.0	6.1	6.1	6.2	6.3	6.4	6.4	6.5	6.6
	B	−2.1	−1.3	−0.7	0	0.9	1.6	2.3	3.0	3.8	4.6	5.3	6.2	7.0	7.9	8.7	9.6	10.0
27Cr steels	*A*	4.3	4.7	4.9	5.0	5.2	5.2	5.3	5.4	5.4	5.5	5.6	5.7	5.7	5.8	5.9	5.9	6.0
	B	−2.0	−1.2	−0.7	0	0.8	1.4	2.1	2.8	3.5	4.2	4.9	5.6	6.4	7.2	7.9	8.8	9.6
Austenitic stainless steels (304, 305, 316, 317, 321, 347, 348 19-9DL, XM-15, etc.)	*A*	7.5	8.0	8.2	8.5	8.9	9.2	9.5	9.7	9.8	10.0	10.1	10.2	10.3	10.5	10.6	10.7	10.8
	B	−3.6	−2.1	−1.2	0	1.4	2.5	3.7	5.0	6.3	7.5	8.8	10.2	11.5	12.9	14.3	15.7	17.2
Other austenitic stainless steels (309, 310, 315, XM-19, etc.)	*A*	7.1	7.6	7.8	8.2	8.5	8.8	8.9	9.1	9.2	9.3	9.4	9.5	9.6	9.7	9.8	9.9	10.1
	B	−3.4	−2.0	−1.1	0	1.3	2.4	3.5	4.7	5.8	7.0	8.2	9.5	10.7	12.0	13.3	14.7	16.0
Gray cast iron	*A*	...	...	...	...	5.8	5.9	6.1	6.3	6.5	6.7	6.8	7.0	7.2	...	...	...	...
	B	...	...	...	**0**	0.9	1.6	2.4	3.2	4.1	5.0	6.0	7.0	8.0	...	...	...	...
Ductile cast iron		...	4.9	5.3	5.7	6.0	6.3	6.5	6.9	7.0	7.1	7.3	7.4	7.5	...	...	...	...
	B	...	**−1.3**	**−0.8**	**0**	0.9	1.7	2.6	3.5	4.4	5.4	6.4	7.4	8.4	...	...	...	...

Not for Resale

Copyright ASME International
Provided by IHS under license with ASME
No reproduction or networking permitted without license from IHS

Table B-1 Thermal Expansion Data (Cont'd)

A = Mean Coefficient of Thermal Expansion, 10^{-6} in./in./°F
B = Linear Thermal Expansion, in./100 ft
} in Going From 70°F to Indicated Temperature [Note (1)]

Material	Coefficient	Temperature Range 70°F to −325	−150	−50	70	200	300	400	500	600	700	800	900	1000	1100	1200	1300	1400
Monel (67Ni–30Cu) N04400	*A*	5.8	6.8	7.2	7.7	8.1	8.3	8.5	8.7	8.8	8.9	8.9	9.0	9.1	9.1	9.2	9.2	9.3
	B	−2.7	−1.8	−1.0	0	1.3	2.3	3.4	4.5	5.6	6.7	7.8	8.9	10.1	11.3	12.4	13.6	14.8
Nickel alloys N02200 and N02201	*A*	5.6	6.4	6.7	7.0	7.3	7.5	7.7	7.9	8.1	8.2	8.3	8.4	8.5	8.6	8.7	8.8	8.9
	B	−2.7	−1.7	−1.0	0	1.2	2.1	3.1	4.1	5.1	6.2	7.2	8.4	9.5	10.6	11.8	13.0	14.2
Nickel alloy N06600	*A*	5.5	6.1	6.4	6.8	7.1	7.3	7.5	7.6	7.8	7.9	8.1	8.2	8.3	8.4	8.6	8.7	8.9
	B	−2.6	−1.6	−0.9	0	1.1	2.0	3.0	3.9	5.0	6.0	7.1	8.1	9.3	10.4	11.6	12.9	14.2
Nickel alloys N08800 and N08810	*A*	5.9	6.9	7.4	7.9	8.3	8.6	8.8	8.9	9.0	9.1	9.2	9.3	9.4	9.5	9.6	9.7	9.8
	B	−2.8	−1.7	−1.1	0	1.3	2.4	3.5	4.6	5.7	6.9	8.1	9.3	10.5	11.7	13.0	14.3	15.7
Nickel alloy N08825	*A*	...	...	7.2	7.5	7.7	7.9	8.0	8.1	8.2	8.3	8.4	8.5	8.6	...	...	...	...
	B	...	...	−1.0	0	1.2	2.2	3.2	4.2	5.2	6.3	7.4	8.5	9.6	...	...	...	...
Copper alloys C1XXXX series	*A*	7.7	8.7	9.0	9.3	9.6	9.7	9.8	9.9	10.0	...	...	...	...	...	...	...	...
	B	−3.7	−2.3	−1.3	0	1.5	2.7	3.9	5.1	6.1	...	...	...	...	...	...	...	...
Bronze alloys	*A*	8.4	8.8	9.2	9.6	10.0	10.1	10.2	10.3	10.4	10.5	10.6	10.7	10.8	10.9	11.0	...	...
	B	−4.0	−2.3	−1.3	0	1.6	2.8	4.1	5.3	6.6	8.0	9.3	10.7	12.1	13.5	14.9	...	...
Brass alloys	*A*	8.2	8.5	9.0	9.3	9.8	10.0	10.2	10.5	10.7	10.9	11.2	11.4	11.6	11.9	12.1	...	...
	B	−3.9	−2.2	−1.3	0	1.5	2.8	4.1	5.4	6.8	8.3	9.8	11.4	13.0	14.7	16.4	...	...
Copper–nickel (70Cu–30Ni)	*A*	6.7	7.4	7.8	8.2	8.5	8.7	8.9	9.1	9.2	9.3	...	...	...	...	...	...	...
	B	−3.2	−2.0	−1.1	0	1.3	2.4	3.5	4.7	5.9	7.0	...	...	...	...	...	...	...
Aluminum alloys	*A*	9.9	10.9	11.6	12.3	13.0	13.3	13.6	13.9	14.2	...	...	...	...	...	...	...	...
	B	−4.7	−2.9	−1.7	0	2.0	3.7	5.4	7.2	9.0	...	...	...	...	...	...	...	...
Titanium alloys (Grades 1, 2, 3, 7, and 12)	*A*	...	...	4.5	4.6	4.7	4.8	4.8	4.9	4.9	5.0	5.1	...	...	...	...	...	...
	B	...	...	−0.6	0	0.7	1.3	1.9	2.5	3.1	3.8	4.4	...	...	...	...	...	...

Not for Resale

Table B-1 Thermal Expansion Data (Cont'd)

NOTES:

(1) These data are for information and it is not to be implied that materials are suitable for all the temperature ranges shown.

(2) Group 1 alloys (by nominal composition):

Carbon steels
(C, C–Si, C–Mn, and C–Mn–Si)
C–$\frac{1}{2}$Mo
$\frac{1}{2}$Cr–$\frac{1}{5}$Mo–V
$\frac{1}{2}$Cr–$\frac{1}{4}$Mo–Si
$\frac{1}{2}$Cr–$\frac{1}{2}$Mo
$\frac{1}{2}$Cr–$\frac{1}{2}$Ni–$\frac{1}{4}$Mo
$\frac{3}{4}$Cr–$\frac{1}{2}$Ni–Cu
$\frac{3}{4}$Cr–$\frac{3}{4}$Ni–Cu–Al
1Cr–$\frac{1}{5}$Mo
1Cr–$\frac{1}{5}$Mo–Si
1Cr–$\frac{1}{2}$Mo
1Cr–$\frac{1}{2}$Mo–V
1$\frac{1}{4}$Cr–$\frac{1}{2}$Mo
1$\frac{1}{4}$Cr–$\frac{1}{2}$Mo–Si
1$\frac{3}{4}$Cr–$\frac{1}{2}$Mo–Cu
2Cr–$\frac{1}{2}$Mo
2$\frac{1}{4}$Cr–1Mo
3Cr–1Mo
$\frac{1}{2}$Ni–$\frac{1}{2}$Mo–V
$\frac{1}{2}$Ni–$\frac{1}{2}$Cr–$\frac{1}{4}$Mo–V
$\frac{3}{4}$Ni–$\frac{1}{2}$Mo–Cr–V
$\frac{3}{4}$Ni–$\frac{1}{2}$Mo–$\frac{1}{3}$Cr–v
$\frac{3}{4}$Ni–$\frac{1}{2}$Cu–Mo
$\frac{3}{4}$Ni–$\frac{1}{2}$Cr–$\frac{1}{2}$Mo–V
$\frac{3}{4}$Ni–1Mo–$\frac{3}{4}$Cr
1Ni–$\frac{1}{2}$Cr–$\frac{1}{2}$Mo
1$\frac{1}{4}$Ni–1Cr–$\frac{1}{2}$Mo
1$\frac{3}{4}$Ni–$\frac{3}{4}$Cr–$\frac{1}{4}$Mo
2Ni–$\frac{3}{4}$Cr–$\frac{1}{4}$Mo
2Ni–$\frac{3}{4}$Cr–$\frac{1}{3}$Mo
2$\frac{1}{2}$Ni
3$\frac{1}{2}$Ni
3$\frac{1}{2}$Ni–1$\frac{3}{4}$Cr–$\frac{1}{2}$Mo–V

(3) Group 2 alloys (by nominal composition):

M–V
Mn–$\frac{1}{4}$Mo
Mn–$\frac{1}{2}$Mo
Mn–$\frac{1}{2}$Mo–$\frac{1}{4}$Ni
Mn–$\frac{1}{2}$Mo–$\frac{1}{2}$Ni
Mn–$\frac{1}{2}$Mo–$\frac{3}{4}$Ni

Copyright ASME International
Provided by IHS under license with ASME
No reproduction or networking permitted without license from IHS
Not for Resale

Table B-1 (SI) Thermal Expansion Data

A = Mean Coefficient of Thermal Expansion, 10^{-6} mm/mm/°C

B = Linear Thermal Expansion, mm/m

in Going From 20°C to Indicated Temperature [Note (1)]

Material	Coefficient	Temperature Range 20°C to −200	−100	−50	20	50	75	100	125	150	175	200	225	250	275
Group 1 carbon and low Alloy steels [Note (2)]	*A*	9.9	10.7	11.1	11.6	11.8	11.9	12.1	12.2	12.4	12.5	12.7	12.8	13.0	13.2
	B	−2.2	−1.3	−0.8	0	0.4	0.7	1.0	1.3	1.6	1.9	2.3	2.6	3.0	3.4
Group 2 low alloy steels [Note (3)]	*A*	10.8	11.7	12.0	12.5	12.7	12.9	13.1	13.3	13.4	13.5	13.6	13.7	13.8	13.9
	B	−2.4	−1.4	−0.8	0	0.4	0.7	1.0	1.4	1.7	2.1	2.5	2.8	3.2	3.6
5Cr–1Mo steels	*A*	10.1	10.8	11.2	11.6	11.8	12.0	12.1	12.2	12.4	12.5	12.6	12.6	12.7	12.7
	B	−2.2	−1.3	−0.8	0	0.4	0.7	1.0	1.3	1.6	1.9	2.3	2.6	2.9	3.3
9Cr–1Mo steels	*A*	9.0	9.8	10.1	10.4	10.6	10.7	10.8	10.9	11.1	11.2	11.3	11.4	11.5	11.6
	B	−2.0	−1.2	−0.7	0	0.3	0.6	0.9	1.1	1.4	1.7	2.0	2.3	2.6	3.0
Straight chromium stainless steels															
12Cr to 13Cr steels	*A*	9.1	9.9	10.2	10.7	10.8	11.0	11.1	11.2	11.3	11.4	11.5	11.6	11.7	11.7
	B	−2.0	−1.2	−0.7	0	0.3	0.6	0.9	1.2	1.5	1.8	2.1	2.4	2.7	3.0
15Cr to 17Cr steels	*A*	8.1	8.8	9.1	9.6	9.7	9.8	9.9	10.0	10.2	10.3	10.3	10.4	10.5	10.6
	B	−1.8	−1.1	−0.6	0	0.3	0.5	0.8	1.1	1.3	1.6	1.9	2.1	2.4	2.7
27Cr steels	*A*	7.7	8.5	8.7	9.0	9.1	9.2	9.3	9.4	9.4	9.5	9.5	9.6	9.7	9.7
	B	−1.7	−1.0	−0.6	0	0.3	0.5	0.7	1.0	1.2	1.5	1.7	2.0	2.2	2.5
Austenitic stainless steels (304, (305, 316, 317, 321, 347, 348 19-9DL XM-15, etc.)	*A*	13.5	14.3	14.7	15.3	15.6	15.9	16.1	16.4	16.6	16.8	17.0	17.2	17.3	17.5
	B	−3.0	−1.7	−1.0	0	0.5	0.9	1.3	1.7	2.2	2.6	3.1	3.5	4.0	4.5
Other austenitic stainless steels (309, 310, 315, XM-19, etc.)	*A*	12.8	13.6	14.1	14.7	14.9	15.1	15.4	15.6	15.8	16.0	16.1	16.2	16.3	16.4
	B	−2.8	−1.6	−1.0	0	0.4	0.8	1.2	1.6	2.1	2.5	2.9	3.3	3.8	4.2
Gray cast iron	*A*	...	...	...	9.8	10.1	10.2	10.4	10.5	10.7	10.8	11.0	11.1	11.2	11.4
	B	...	...	...	0	0.3	0.6	0.8	1.1	1.4	1.7	2.0	2.3	2.6	2.9
Ductile cast iron	*A*	...	8.8	9.5	10.3	10.6	10.8	10.9	11.1	11.3	11.4	11.7	12.0	12.2	12.3
	B	...	−1.1	−0.7	0	0.3	0.6	0.9	1.2	1.5	1.8	2.1	2.5	2.8	3.1
Monel (67Ni–30Cu) N04400	*A*	10.4	12.2	13.0	13.8	14.1	14.4	14.7	14.9	15.0	15.2	15.3	15.4	15.6	15.7
	B	−2.3	−1.5	−0.9	0	0.4	0.8	1.2	1.6	2.0	2.4	2.8	3.2	3.6	4.0
Nickel alloys N02200 and N02201	*A*	10.1	11.5	12.0	12.7	12.9	13.1	13.3	13.5	13.6	13.8	13.9	14.0	14.2	14.3
	B	−2.2	−1.4	−0.8	0	0.4	0.7	1.1	1.4	1.8	2.1	2.5	2.9	3.3	3.6
Nickel alloy N06600	*A*	9.9	10.8	11.5	12.2	12.5	12.7	12.8	13.1	13.2	13.3	13.5	13.6	13.7	13.8
	B	−2.2	−1.3	−0.8	0	0.4	0.7	1.0	1.4	1.7	2.1	2.4	2.8	3.2	3.5
Nickel alloys N08800 and N08810	*A*	10.6	12.5	13.3	14.3	14.6	14.9	15.1	15.3	15.5	15.7	15.8	15.9	16.0	16.1
	B	−2.3	−1.5	−0.9	0	0.4	0.8	1.2	1.6	2.0	2.4	2.8	3.3	3.7	4.1
Nickel alloy N08825	*A*	...	...	12.9	13.5	13.6	13.8	13.9	14.0	14.1	14.2	14.4	14.4	14.5	14.6
	B	...	...	−0.9	0	0.4	0.8	1.1	1.5	1.8	2.2	2.6	3.0	3.3	3.7

Copyright ASME International
Provided by IHS under license with ASME
No reproduction or networking permitted without license from IHS
Not for Resale

Table B-1 (SI) Thermal Expansion Data

A = Mean Coefficient of Thermal Expansion, 10^{-6} mm/mm/°C
B = Linear Thermal Expansion, mm/m
} in Going From 20°C to Indicated Temperature [Note (1)]

Temperature Range 20°C to																					
300	325	350	375	400	425	450	475	500	525	550	575	600	625	650	675	700	725	750	775	800
13.3	13.5	13.6	13.7	13.8	13.9	14.1	14.2	14.3	14.4	14.6	14.7	14.8	14.9	15.0	15.0	15.1	15.1	15.2	...	...
3.7	4.1	4.5	4.9	5.2	5.6	6.1	6.5	6.9	7.3	7.7	8.1	8.6	9.0	9.4	9.8	10.2	10.7	11.1	...	...
14.0	14.1	14.2	14.3	14.4	14.5	14.6	14.6	14.7	14.8	14.8	14.9	14.9	15.0	15.1	15.1	15.2	...	...	...	...
3.9	4.3	4.7	5.1	5.5	5.9	6.3	6.7	7.1	7.5	7.9	8.3	8.7	9.1	9.5	9.9	10.3	...	...	...	...
12.8	12.9	13.0	13.1	13.1	13.2	13.2	13.3	13.4	13.5	13.5	13.6	13.6	13.7	13.8	13.8	13.9	...	...	...	...
3.6	3.9	4.3	4.6	5.0	5.3	5.7	6.1	6.4	6.8	7.2	7.5	7.9	8.3	8.7	9.1	9.4	...	...	...	...
11.7	11.8	11.8	11.9	12.0	12.1	12.2	12.2	12.3	12.4	12.5	12.6	12.6	12.7	12.8	12.8	12.9	...	...	...	...
3.3	3.6	3.9	4.2	4.6	4.9	5.2	5.6	5.9	6.3	6.6	7.0	7.3	7.7	8.1	8.4	8.8	...	...	...	...
11.7	11.8	11.8	11.9	11.9	12.0	12.1	12.1	12.2	12.2	12.2	12.3	12.3	12.4	12.4	12.4	12.5	...	...	...	...
3.3	3.6	3.9	4.2	4.5	4.9	5.2	5.5	5.8	6.2	6.5	6.8	7.2	7.5	7.8	8.1	8.5	...	...	...	...
10.7	10.8	10.8	10.9	11.0	11.0	11.1	11.2	11.3	11.3	11.4	11.4	11.5	11.6	11.6	11.7	11.7	...	...	...	...
3.0	3.3	3.6	3.9	4.2	4.5	4.8	5.1	5.4	5.7	6.0	6.3	6.7	7.0	7.3	7.6	8.0	...	...	...	...
9.8	9.8	9.9	9.9	10.0	10.0	10.1	10.2	10.2	10.3	10.3	10.4	10.4	10.5	10.6	10.6	10.7	...	...	...	...
2.7	3.0	3.3	3.5	3.8	4.1	4.3	4.6	4.9	5.2	5.5	5.8	6.1	6.4	6.7	7.0	7.3	...	...	...	...
17.6	17.7	17.9	18.0	18.1	18.2	18.3	18.3	18.5	18.5	18.6	18.7	18.8	18.9	19.0	19.1	19.2	...	...	...	...
4.9	5.4	5.9	6.4	6.9	7.4	7.8	8.3	8.9	9.4	9.9	10.4	10.9	11.4	12.0	12.5	13.0	...	...	...	...
16.5	16.5	16.7	16.7	16.8	16.9	17.0	17.1	17.2	17.2	17.3	17.4	17.5	17.6	17.7	17.8	17.9	...	...	...	...
4.6	5.0	5.5	5.9	6.4	6.8	7.3	7.8	8.2	8.7	9.2	9.7	10.1	10.6	11.1	11.6	12.2	...	...	...	...
11.5	11.7	11.8	12.0	12.1	12.3	12.4	12.6	12.7	12.9	13.0	...	...	...	...	...	...	...	...	...	...
3.2	3.6	3.9	4.2	4.6	5.0	5.3	5.7	6.1	6.5	6.9	...	...	...	...	...	...	...	...	...	...
12.5	12.7	12.7	12.9	13.0	13.1	13.1	13.2	13.3	13.5	13.6	...	...	...	...	...	...	...	...	...	...
3.5	3.9	4.2	4.6	4.9	5.3	5.7	6.0	6.4	6.8	7.2	...	...	...	...	...	...	...	...	...	...
15.8	15.9	16.0	16.0	16.1	16.1	16.2	16.2	16.2	16.3	16.3	16.3	16.4	16.4	16.5	16.5	16.5	16.6	16.6	16.7	16.7
4.4	4.9	5.3	5.7	6.1	6.5	7.0	7.4	7.8	8.2	8.6	9.1	9.5	9.9	10.4	10.8	11.2	11.7	12.1	12.6	13.0
14.4	14.5	14.6	14.7	14.8	14.9	15.0	15.0	15.1	15.2	15.3	15.4	15.5	15.6	15.7	15.8	15.8	15.9	16.0	16.1	16.2
4.0	4.4	4.8	5.2	5.6	6.0	6.4	6.8	7.3	7.7	8.1	8.5	9.0	9.4	9.9	10.3	10.8	11.2	11.7	12.2	12.6
13.9	14.0	14.1	14.2	14.4	14.5	14.6	14.7	14.8	14.9	15.0	15.0	15.2	15.3	15.4	15.6	15.7	15.8	15.9	16.1	16.2
3.9	4.3	4.7	5.1	5.5	5.9	6.3	6.7	7.1	7.5	7.9	8.4	8.8	9.3	9.7	10.2	10.6	11.1	11.6	12.1	12.7
16.2	16.3	16.3	16.4	16.5	16.6	16.7	16.7	16.8	16.9	17.0	17.1	17.1	17.2	17.3	17.4	17.5	17.6	17.7	17.8	17.9
4.5	5.0	5.4	5.8	6.3	6.7	7.2	7.6	8.1	8.5	9.0	9.5	9.9	10.4	10.9	11.4	11.9	12.4	12.9	13.4	14.0
14.7	14.8	14.9	15.0	15.1	15.1	15.2	15.3	15.4	15.5	15.6	...	...	...	...	...	...	...	...	...	...
4.1	4.5	4.9	5.3	5.7	6.1	6.5	7.0	7.4	7.8	8.3	...	...	...	...	...	...	...	...	...	...

Copyright ASME International
Provided by IHS under license with ASME
No reproduction or networking permitted without license from IHS
Not for Resale

Table B-1 (SI) Thermal Expansion Data (Cont'd)

A = Mean Coefficient of Thermal Expansion, 10^{-6} mm/mm/°C
B = Linear Thermal Expansion, mm/m
} in Going From 20°C to Indicated Temperature [Note (1)]

Material	Coefficient	Temperature Range 20°C to													
		−200	−100	−50	20	50	75	100	125	150	175	200	225	250	275
Copper alloys C1XXXX series	*A*	13.9	15.7	16.2	16.8	17.0	17.1	17.3	17.4	17.5	17.6	17.7	17.8	17.9	18.0
	B	−3.1	−1.9	−1.1	0	0.5	0.9	1.4	1.8	2.3	2.7	3.2	3.7	4.1	4.6
Bronze alloys	*A*	15.1	15.8	16.4	17.2	17.6	17.9	18.1	18.2	18.3	18.3	18.4	18.5	18.5	18.6
	B	−3.3	−1.9	−1.1	0	0.5	1.0	1.4	1.9	2.4	2.8	3.3	3.8	4.3	4.8
Brass alloys	*A*	14.7	15.4	16.0	16.8	17.2	17.4	17.6	17.8	18.0	18.2	18.4	18.6	18.8	19.0
	B	−3.2	−1.9	−1.1	0	0.5	1.0	1.4	1.9	2.3	2.8	3.3	3.8	4.3	4.8
Copper–nickel (70Cu–30Ni)	*A*	11.9	13.4	14.0	14.7	14.9	15.2	15.4	15.5	15.7	15.9	16.1	16.2	16.3	16.4
	B	−2.6	−1.6	−1.0	0	0.4	0.8	1.2	1.6	2.0	2.5	2.9	3.3	3.7	4.2
Aluminum alloys	*A*	18.0	19.7	20.8	22.1	22.6	23.0	23.4	23.7	23.9	24.2	24.5	24.7	24.9	25.2
	B	−4.0	−2.4	−1.5	0	0.7	1.3	1.9	2.5	3.1	3.7	4.4	5.1	5.7	6.4
Titanium alloys (Grades 1, 2, 3, 7, and 12)	*A*	...	...	8.2	8.3	8.4	8.4	8.5	8.5	8.6	8.6	8.6	8.7	8.7	8.8
	B	...	...	−0.6	0	0.3	0.5	0.7	0.9	1.1	1.3	1.6	1.8	2.0	2.2

NOTES:

(1) These data are for information and it is not to be implied that materials are suitable for all the temperature ranges shown.

(2) Group 1 alloys (by nominal composition):

Carbon steels
(C, C–Si, C–Mn, and C–Mn–Si)
C–½Mo
½Cr–⅕Mo–V
½Cr–¼Mo–Si
½Cr–½Mo
½Cr–½Ni–¼Mo
¾Cr–½Ni–Cu
¾Cr–¾Ni–Cu–Al
1Cr–⅕Mo
1Cr–⅕Mo–Si
1Cr–½Mo
1Cr–½Mo–V
1¼Cr–½Mo
1¼Cr–½Mo–Si
1¾Cr–½Mo–Cu
2Cr–½Mo
2¼Cr–1Mo
3Cr–1Mo
½Ni–½Mo–V
½Ni–½Cr–¼Mo–V
¾Ni–½Mo–Cr–V
¾Ni–½Mo–⅓Cr–V
¾Ni–½Cu–Mo
¾Ni–½Cr–½Mo–V
¾Ni–1Mo–¾Cr
1Ni–½Cr–½Mo
1¼Ni–1Cr–½Mo
1¾Ni–¾Cr–¼Mo
2Ni–¾Cr–¼Mo
2Ni–¾Cr–⅓Mo
2½Ni
3½Ni
3½Ni–1¾Cr–½Mo–V

(3) Group 2 alloys (by nominal composition):

M–V
Mn–¼Mo
Mn–½Mo
Mn–½Mo–¼Ni
Mn–½Mo–½Ni
Mn–½Mo–¾Ni

Copyright ASME International
Provided by IHS under license with ASME
No reproduction or networking permitted without license from IHS
Not for Resale

Table B-1 (SI) Thermal Expansion Data (Cont'd)

A = Mean Coefficient of Thermal Expansion, 10^{-6} mm/mm/°C
B = Linear Thermal Expansion, mm/m
} in Going From 20°C to Indicated Temperature [Note (1)]

Temperature Range 20°C to																				
300	325	350	375	400	425	450	475	500	525	550	575	600	625	650	675	700	725	750	775	800
18.0	18.1	...	...	...	...	...	...	...	...	...	...	...	...	...	...	...	...	...	...	...
5.1	5.5	...	...	...	...	...	...	...	...	...	...	...	...	...	...	...	...	...	...	...
18.7	18.8	18.9	19.0	19.0	19.1	19.2	19.3	19.4	19.4	19.5	19.6	19.7	19.7	19.8	...	...	...	...	...	...
5.2	5.7	6.2	6.7	7.2	7.7	8.3	8.8	9.3	9.8	10.3	10.9	11.4	11.9	12.5	...	...	...	...	...	...
19.2	19.3	19.5	19.7	19.9	20.1	20.3	20.5	20.7	20.8	21.0	21.2	21.4	21.6	21.8	...	...	...	...	...	...
5.4	5.9	6.4	7.0	7.6	8.1	8.7	9.3	9.9	10.5	11.1	11.8	12.4	13.1	13.7	...	...	...	...	...	...
16.5	16.5	16.6	16.6	16.7	...	...	...	...	...	...	...	...	...	...	...	...	...	...	...	...
4.6	5.0	5.5	5.9	6.3	...	...	...	...	...	...	...	...	...	...	...	...	...	...	...	...
25.5	25.7	...	...	...	...	...	...	...	...	...	...	...	...	...	...	...	...	...	...	...
7.1	7.8	...	...	...	...	...	...	...	...	...	...	...	...	...	...	...	...	...	...	...
8.8	8.9	8.9	9.0	9.0	9.1	...	...	...	...	...	...	...	...	...	...	...	...	...	...	...
2.5	2.7	2.9	3.2	3.4	3.7	...	...	...	...	...	...	...	...	...	...	...	...	...	...	...

Copyright ASME International
Provided by IHS under license with ASME
No reproduction or networking permitted without license from IHS
Not for Resale

MANDATORY APPENDIX C

Table C-1 Moduli of Elasticity for Ferrous Material

Material	E = Modulus of Elasticity, psi (Multiply Tabulated Values by 10^6) [Note (1)]															
	Temperature, °F															
	−100	70	200	300	400	500	600	700	800	900	1000	1100	1200	1300	1400	1500
Carbon steels with carbon content 0.30% or less	30.2	29.5	28.8	28.3	27.7	27.3	26.7	25.5	24.2	22.4	20.4	18.0	...	...	...	...
Carbon steels with carbon content above 0.30%	30.0	29.3	28.6	28.1	27.5	27.1	26.5	25.3	24.0	22.3	20.2	17.9	15.4	...	...	...
Carbon-moly steels	29.9	29.2	28.5	28.0	27.4	27.0	26.4	25.3	23.9	22.2	20.1	17.8	15.3	...	...	...
Nickel steels	28.5	27.8	27.1	26.7	26.1	25.7	25.2	24.6	23.9	23.2	22.4	21.5	20.4	19.2	17.7	...
Chromium steels:																
$\frac{1}{2}$Cr through 2Cr	30.4	29.7	29.0	28.5	27.9	27.5	26.9	26.3	25.5	24.8	23.9	23.0	21.8	20.5	18.9	...
$2\frac{1}{4}$Cr through 3Cr	31.4	30.6	29.8	29.4	28.8	28.3	27.7	27.1	26.3	25.6	24.6	23.7	22.5	21.1	19.4	...
5Cr through 9Cr	31.7	30.9	30.1	29.7	29.0	28.6	28.0	27.3	26.1	24.7	22.7	20.4	18.2	15.5	12.7	...
Austenitic stainless steels: Type 304—18Cr–8Ni; Type 310—25Cr–20Ni; Type 316—16Cr–12Ni–2Mo; Type 321—18Cr–10Ni–Ti; Type 347—18Cr–10Ni–Cb; Type 309—23Cr–12Ni	29.1	28.3	27.6	27.0	26.5	25.8	25.3	24.8	24.1	23.5	22.8	22.1	21.2	20.2	19.2	18.1
Straight chromium stainless steels (12Cr, 17Cr, 27Cr)	30.1	29.2	28.5	27.9	27.3	26.7	26.1	25.6	24.7	23.2	21.5	19.1	16.6	...	...	...
Gray cast iron	...	13.4	13.2	12.9	12.6	12.2	11.7	11.0	10.2	...	...	...	...	...	...	...

NOTE:

(1) These data are for information and it is not to be implied that materials are suitable for all the temperature ranges shown.

Copyright ASME International
Provided by IHS under license with ASME
No reproduction or networking permitted without license from IHS
Not for Resale

Table C-1 (SI) Moduli of Elasticity for Ferrous Material

Material	E = Modulus of Elasticity, GPa [Note (1)]																	
	Temperature, °C																	
	−75	20	50	100	150	200	250	300	350	400	450	500	550	600	650	700	750	800
Carbon steels with carbon content 0.30% or less	208	203	201	198	195	191	189	185	179	172	162	150	136	122	107	...	...	...
Carbon steels with carbon content above 0.30%	207	202	200	197	194	190	188	184	178	171	161	149	135	121	106	...	...	...
Carbon-moly steels	206	201	199	196	193	189	187	183	177	170	160	149	135	121	106	...	...	...
Nickel steels	196	192	190	187	184	180	178	174	169	162	153	141	128	115	101	...	...	...
Chromium steels:																		
$\frac{1}{2}$Cr through 2Cr	210	205	204	201	197	193	190	186	181	176	170	160	148	133	...	...	...	...
$2\frac{1}{4}$Cr through 3Cr	216	211	210	207	203	199	195	191	187	182	175	165	153	137	...	...	...	...
5Cr through 9Cr	219	213	212	209	205	201	197	193	189	185	181	176	171	164	156	147	138	...
Austenitic stainless steels:																		
Type 304—18Cr–8Ni Type 310—25Cr–20Ni Type 316—16Cr–12Ni–2Mo Type 321—18Cr–10Ni–Ti Type 347—18Cr–10Ni–Cb Type 309—23Cr–12Ni	201	195	194	192	188	184	180	176	172	168	164	160	156	152	146	140	134	127
Straight chromium stainless steels (12Cr, 17Cr, 27Cr)	208	201	200	198	194	190	186	181	178	174	167	156	144	130	113	...	...	...
Gray cast iron	...	92	92	91	89	87	85	82	78	73	67	...	...	...	...	...	...	...

NOTE:
(1) These data are for information and it is not to be implied that materials are suitable for all the temperature ranges shown.

Copyright ASME International
Provided by IHS under license with ASME
No reproduction or networking permitted without license from IHS
Not for Resale

Table C-2 Moduli of Elasticity for Nonferrous Material

	E = Modulus of Elasticity, psi (Multiply Tabulated Values by 10^6) [Note (1)]												
	Temperature, °F												
Materials	−100	70	200	300	400	500	600	700	800	900	1,000	1,100	1,200
High Nickel Alloys													
N02200 (200) N02201 (201)	30.9	30.0	29.3	28.8	28.5	28.1	27.8	27.3	26.7	26.1	25.5	25.1	24.5
N04400 (400)	26.8	26.0	25.4	25.0	24.7	24.3	24.1	23.7	23.1	22.6	22.1	21.7	21.2
N06002 (X)	29.4	28.5	27.8	27.4	27.1	26.6	26.4	25.9	25.4	24.8	24.2	23.7	23.2
N06600 (600)	31.9	31.0	30.2	29.9	29.5	29.0	28.7	28.2	27.6	27.0	26.4	25.9	25.3
N06625 (625)	30.9	30.0	29.3	28.8	28.5	28.1	27.8	27.3	26.7	26.1	25.5	25.1	24.5
N08800 (800) (2) N08810 (800H) (2)	29.4	28.5	27.8	27.4	27.1	26.6	26.4	25.9	25.4	24.8	24.2	23.8	23.2
N10001 (B)	32.0	31.1	30.3	29.9	29.5	29.1	28.8	28.3	27.7	27.1	26.4	26.0	25.3
N06007 (G)	28.6	27.8	27.1	26.7	26.4	26.0	25.7	25.3	24.7	24.2	23.6	23.2	22.7
N06455 (C-4)	30.6	29.8	29.1	28.6	28.3	27.9	27.6	27.1	26.5	25.9	25.3	24.9	24.3
N08320 (20 Mod)	28.6	27.8	27.1	26.7	26.4	26.0	25.7	25.3	24.7	24.2	23.6	23.2	22.7
N10276 (C276)	30.6	29.8	29.1	28.6	28.3	27.9	27.6	27.1	26.5	25.9	25.3	24.9	24.3
N10665 (B-2)	32.3	31.4	30.6	30.1	29.8	29.3	29.0	28.6	27.9	27.3	26.7	26.2	25.6
Aluminum and Aluminum Alloys													
A24430 (B443) A91060 (1060) A91100 (1100) A93003 (3003) A93004 (3034) A96061 (6061) A96063 (6063)	10.5	10.0	9.6	9.2	8.7	8.1	...	...	...	...	...	...	...
A95052 (5052) A95154 (5154) A95454 (5454) A95652 (5652)	10.7	10.2	9.7	9.4	8.9	8.3	...	...	...	...	...	...	...
A03560 (356) A95083 (5083) A95086 (5086) A95456 (5456)	10.8	10.3	9.8	9.5	9.0	8.3	...	...	...	...	...	...	...
Copper and Copper Alloys													
C83600 C92200	14.4	14.0	13.7	13.4	13.2	12.9	12.5	12.0	...	...	...	...	...
C46400 C65500 C95200 C95400	15.4	15.0	14.6	14.4	14.1	13.8	13.4	12.8	...	...	...	...	...
C11000	16.5	16.0	15.6	15.4	15.0	14.7	14.2	13.7	...	...	...	...	...
C10200 C12000 C12200 C12500 C14200 C23000 C61400	17.5	17.0	16.6	16.3	16.0	15.6	15.1	14.5	...	...	...	...	...

Copyright ASME International
Provided by IHS under license with ASME
No reproduction or networking permitted without license from IHS
Not for Resale

Table C-2 Moduli of Elasticity for Nonferrous Material (Cont'd)

	E = Modulus of Elasticity, psi (Multiply Tabulated Values by 10^6) [Note (1)]												
	Temperature, °F												
Materials	−100	70	200	300	400	500	600	700	800	900	1,000	1,100	1,200
Copper and Copper Alloys (Cont'd)													
C70600	18.5	18.0	17.6	17.3	16.9	16.6	16.0	15.4	...	...	...	...	...
C97600	19.6	19.0	18.5	18.2	17.9	17.5	16.9	16.2	...	...	...	...	...
C71000	20.6	20.0	19.5	19.2	18.8	18.4	17.8	17.1	...	...	...	...	...
C71500	22.7	22.0	21.5	21.1	20.7	20.2	19.6	18.8	...	...	...	...	...
Unalloyed Titanium													
Grades 1, 2, 3, 7, and 12	...	15.5	15.0	14.6	14.0	13.3	12.6	11.9	11.2	...	...	...	...

NOTES:

(1) These data are for information and it is not to be implied that materials are suitable for all the temperature ranges shown.

(2) For N08800 and N08810, use the following E values above 1200°F: at 1300°F, $E = 22.7$; at 1400°F, $E = 21.9$; at 1500°F, $E = 21.2 \times 10^6$ psi.

Copyright ASME International
Provided by IHS under license with ASME
No reproduction or networking permitted without license from IHS
Not for Resale

Table C-2 (SI) Moduli of Elasticity for Nonferrous Material

Materials	E = Modulus of Elasticity, GPa [Note (1)]																	
	Temperature, °C																	
	−75	20	50	100	150	200	250	300	350	400	450	500	550	600	650	700	750	800
High Nickel Alloys																		
N02200 (200) N02201 (201)	214	207	205	202	199	197	194	191	189	186	183	180	176	172	169	164	161	156
N04400 (400)	185	179	178	175	173	170	168	166	164	161	158	156	153	149	146	142	139	135
N06002 (X)	203	197	195	192	189	187	184	182	179	177	174	171	167	163	160	156	153	148
N06600 (600)	221	214	212	209	206	203	200	198	195	192	189	186	182	178	174	170	166	161
N06625 (625)	214	207	205	202	199	197	194	191	189	186	183	180	176	172	169	164	161	156
N08800 (800) N08810 (800H)	203	197	195	192	189	187	184	182	179	177	174	171	167	163	160	156	153	148
N10001 (B)	222	214	213	210	207	204	201	198	196	193	190	186	182	178	175	170	167	161
N06007 (G)	198	192	190	187	185	182	180	177	175	172	169	167	163	159	156	152	149	144
N06455 (C-4)	212	205	204	201	198	195	193	190	188	185	182	179	175	171	167	163	160	155
N08320 (20Mod)	198	192	190	187	185	182	180	177	175	172	169	167	163	159	156	152	149	144
N10276 (C-276)	212	205	204	201	198	195	193	190	188	185	182	179	175	171	167	163	160	155
N10665 (B-2)	224	217	215	212	209	206	203	200	198	195	191	188	184	180	176	172	168	163
Aluminum and Aluminum Alloys																		
A24430 (B443) A91060 (1060) A91100 (1100) A93003 (3003) A93004 (3034) A96061 (6061) A96063 (6063)	72	69	68	66	63	61	57	52	46	...	...	...	...	...	...	...	...	...
A95052 (5052) A95154 (5154) A95454 (5454) A95652 (5652)	74	70	69	67	65	62	58	53	47	...	...	...	...	...	...	...	...	...
A03560 (356) A95083 (5083) A95086 (5086) A95456 (5456)	74	71	70	68	65	62	58	54	47	...	...	...	...	...	...	...	...	...
Copper and Copper Alloys																		
C83600 C92200	99	97	96	94	93	91	89	87	84	81	...	...	...	...	...	...	...	...
C46400 C65500 C95200 C95400	107	103	102	101	99	98	96	93	90	86	...	...	...	...	...	...	...	...
C11000	114	110	109	108	106	104	102	99	96	92	...	...	...	...	...	...	...	...
C10200 C12000 C12200 C12500 C14200 C23000 C61400	121	117	116	115	113	111	108	106	102	98	...	...	...	...	...	...	...	...

Copyright ASME International
Provided by IHS under license with ASME
No reproduction or networking permitted without license from IHS Not for Resale

Table C-2 (SI) Moduli of Elasticity for Nonferrous Material (Cont'd)

	E = Modulus of Elasticity, GPa [Note (1)]																	
	Temperature, °C																	
Materials	−75	20	50	100	150	200	250	300	350	400	450	500	550	600	650	700	750	800
Copper and Copper Alloys (Cont'd)																		
C70600 C97600 C71000 C71500	128	124	123	121	119	117	115	112	108	104	...	...	...	...	...	...	...	...
Unalloyed Titanium																		
Grades 1, 2, 3, 7, and 12	...	107	106	103	100	97	92	88	84	79	75	71	...	...	...	...	...	...

NOTE:
(1) These data are for information and it is not to be implied that materials are suitable for all the temperature ranges shown.

Copyright ASME International
Provided by IHS under license with ASME
No reproduction or networking permitted without license from IHS
Not for Resale

MANDATORY APPENDIX D

Table D-1 Flexibility and Stress Intensification Factors

Description	Flexibility Characteristic h	Flexibility Factor k	Stress Intensification Factor i	Sketch
Welding elbow or pipe bend [Notes (1), (2), (3), (9), (13)]	$\frac{t_n R}{r^2}$	$\frac{1.65}{h}$	$\frac{0.9}{h^{2/3}}$	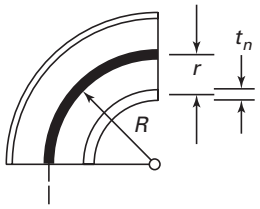
Closely spaced miter bend [Notes (1), (2), (3), (13)] $s < r(1 + \tan \theta)$ $B \geq 6\ t_n$ $\theta \leq 22\frac{1}{2}$ deg.	$\frac{s t_n \cot \theta}{2r^2}$	$\frac{1.52}{h^{5/6}}$	$\frac{0.9}{h^{2/3}}$	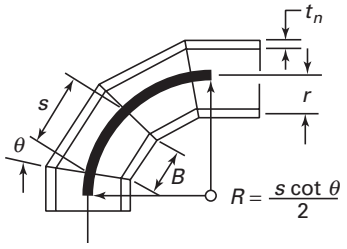
Widely spaced miter bend [Notes (1), (2), (4), (13)] $s \geq r(1 + \tan \theta)$ $\theta \leq 22\frac{1}{2}$ deg.	$\frac{t_n (1 + \cot \theta)}{2r}$	$\frac{1.52}{h^{5/6}}$	$\frac{0.9}{h^{2/3}}$	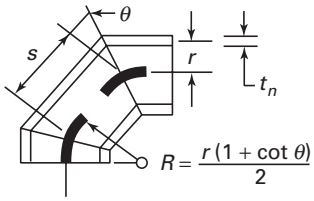
Welding tee per ASME B16.9 [Notes (1), (2), (10)]	$\frac{4.4 t_n}{r}$	1	$\frac{0.9}{h^{2/3}}$	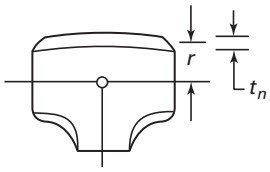
Reinforced fabricated tee [Notes (1), (2), (5), (10)]	$\frac{\left(t_n + \frac{t_e}{2}\right)^{5/2}}{r\,(t_n)^{3/2}}$	1	$\frac{0.9}{h^{2/3}}$	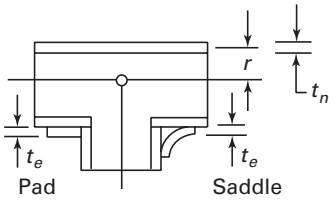
Unreinforced fabricated tee [Notes (1), (2), (10)]	$\frac{t_n}{r}$	1	$\frac{0.9}{h^{2/3}}$	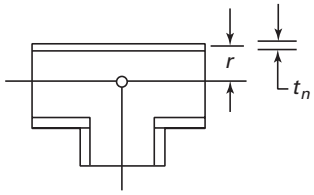

Copyright ASME International
Provided by IHS under license with ASME
No reproduction or networking permitted without license from IHS
Not for Resale

Table D-1 Flexibility and Stress Intensification Factors (Cont'd)

Description	Flexibility Characteristic h	Flexibility Factor k	Stress Intensification Factor i	Sketch
Branch welded-on fitting (integrally reinforced) per MSS SP-97 [Notes (1), (2)]	$\frac{3.3t_n}{r}$	1	$\frac{0.9}{h^{2/3}}$	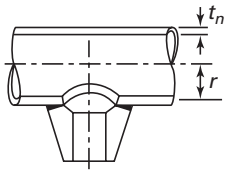
Extruded outlet meeting the requirements of para. 104.3.1(G) [Notes (1), (2)]	$\frac{t_n}{r}$	1	$\frac{0.9}{h^{2/3}}$	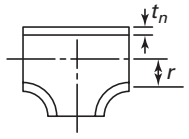
Welded-in contour insert with $r_x \geq D_{ob}/8$ $T_c \geq 1.5\ t_n$ [Notes (1), (2)]	$4.4\ \frac{t_n}{r}$	1	$\frac{0.9}{h^{2/3}}$	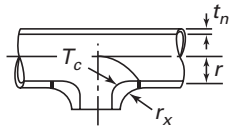

Description	Flexibility Factor k	Stress Intensification Factor i	Sketch
Branch connection [Notes (1), (6)]	1	For checking branch end $1.5 \left(\frac{R_m}{t_{nh}}\right)^{2/3} \left(\frac{r'_m}{R_m}\right)^{1/2} \left(\frac{t_{nb}}{t_{nh}}\right) \left(\frac{r'_m}{r_p}\right)$	See Fig. D-1
Butt weld [Note (1)] $t \geq 0.237$ in., $\delta_{max} \leq 1/16$ in., and $\delta_{avg}/t \leq 0.13$	1	1.0 [Note (12)]	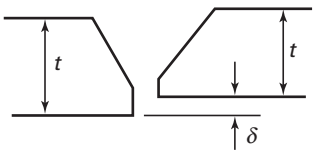
Butt weld [Note (1)] $t \geq 0.237$ in., $\delta_{max} \leq 1/8$ in., and δ_{avg}/t = any value	1	1.9 max. or $[0.9 + 2.7(\delta_{avg}/t)]$, but not less than 1.0 [Note (12)]	
Butt weld [Note (1)] $t \geq 0.237$ in., $\delta_{max} \leq 1/16$ in., and $\delta_{avg}/t \leq 0.33$	1		
Fillet welds	1	2.1; or 1.3 for fillet welds as defined in Note (11)	See Figs. 127.4.4(A), 127.4.4(B), and 127.4.4(C)
Tapered transition per para. 127.4.2(B) and ASME B16.25 [Note (1)]	1	1.9 max. or $1.3 + 0.0036\frac{D_o}{t_n} + 3.6\frac{\delta}{t_n}$	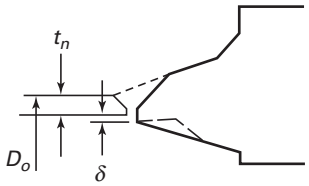

Copyright ASME International
Provided by IHS under license with ASME
No reproduction or networking permitted without license from IHS
Not for Resale

Table D-1 Flexibility and Stress Intensification Factors (Cont'd)

Description	Flexibility Factor *k*	Stress Intensification Factor *i*	Sketch
Concentric reducer per ASME B16.9 [Note (7)]	1	2.0 max. or $0.5 + 0.01\alpha \left(\frac{D_2}{t_2}\right)^{1/2}$	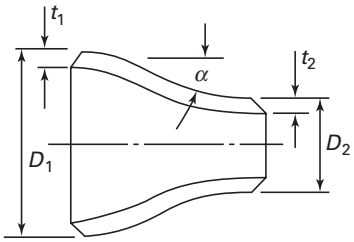
Threaded pipe joint, or threaded flange	1	2.3	. . .
Corrugated straight pipe, or corrugated or creased bend [Note (8)]	5	2.5	. . .

Copyright ASME International
Provided by IHS under license with ASME
No reproduction or networking permitted without license from IHS
Not for Resale

Table D-1 Flexibility and Stress Intensification Factors (Cont'd)

NOTES:

(1) The following nomenclature applies to Table D-1:
- B = length of miter segment at crotch, in. (mm)
- D_o = outside diameter, in.
- D_{ob} = outside diameter of branch, in. (mm)
- R = bend radius of elbow or pipe bend, in. (mm)
- r = mean radius of pipe, in. (mm) (matching pipe for tees)
- r_x = external crotch radius of welded-in contour inserts, in. (mm)
- s = miter spacing at center line, in. (mm)
- T_c = crotch thickness of welded-in contour inserts, in. (mm)
- t_n = nominal wall thickness of pipe, in. (mm) (matching pipe for tees)
- t_r = reinforcement pad or saddle thickness, in. (mm)
- α = reducer cone angle, deg.
- δ = mismatch, in. (mm)
- θ = one-half angle between adjacent miter axes, deg.

(2) The flexibility factors k and stress intensification factors i in Table D-1 apply to bending in any plane for fittings and shall in no case be taken less than unity. Both factors apply over the effective arc length (shown by heavy center lines in the sketches) for curved and miter elbows, and to the intersection point for tees. The values of k and i can be read directly from Chart D-1 by entering with the characteristic h computed from the formulas given.

(3) Where flanges are attached to one or both ends, the values of k and i in Table D-1 shall be multiplied by the factor c given below, which can be read directly from Chart D-2, entering with the computed h: one end flanged, $c = h^{1/6}$; both ends flanged, $c = h^{1/3}$.

(4) Also includes single miter joints.

(5) When $t_e > 1.5t_n$, $h = 4.05t_n/r$.

(6) *The equation applies only if the following conditions are met.*

(a) The reinforcement area requirements of para. 104.3 are met.

(b) The axis of the branch pipe is normal to the surface of run pipe wall.

(c) For branch connections in a pipe, the arc distance measured between the centers of adjacent branches along the surface of the run pipe is not less than three times the sum of their inside radii in the longitudinal direction or is not less than two times the sum of their radii along the circumference of the run pipe.

(d) The inside corner radius r_1 (see Fig. D-1) is between 10% and 50% of t_{nh}.

(e) The outer radius r_2 (see Fig. D-1) is not less than the larger of $T_b/2$, $(T_b + y)/2$ [shown in Fig. D-1 sketch (c)], or $t_{nh}/2$.

(f) The outer radius r_3 (see Fig. D-1) is not less than the larger of:

(1) $0.002\theta d_o$;

(2) $2(\sin\theta)^3$ times the offset for the configurations shown in Fig. D-1 sketches (a) and (b).

(g) $R_m/t_{nh} \le 50$ and $rt_m/R_m \le 0.5$.

(7) The equation applies only if the following conditions are met:

(a) Cone angle α does not exceed 60 deg., and the reducer is concentric.

(b) The larger of D_1/t_1 and D_2/t_2 does not exceed 100.

(c) The wall thickness is not less than t_1 throughout the body of the reducer, except in and immediately adjacent to the cylindrical portion on the small end, where the thickness shall not be less than t_2.

(8) Factors shown apply to bending; flexibility factor for torsion equals 0.9.

(9) The designer is cautioned that cast butt welding elbows may have considerably heavier walls than those of the pipe with which they are used. Large errors may be introduced unless the effect of these greater thicknesses is considered.

(10) The stress intensification factors in the Table were obtained from tests on full size outlet connections. For less than full size outlets, the full size values should be used until more applicable values are developed.

(11) A stress intensification factor of 1.3 may be used for socket weld fitting if toe weld blends smoothly with no undercut in pipe wall as shown in the concave, unequal leg fillet weld of Fig. 127.4.4(A).

(12) The stress intensification factors apply to girth butt welds between two items for which the wall thicknesses are between $0.875t$ and $1.10t$ for an axial distance of $\sqrt{D_o t}$. D_o and t are nominal outside diameter and nominal wall thickness, respectively. δ_{avg} is the average mismatch or offset.

(13) In large diameter thin-wall elbows and bends, pressure can significantly affect magnitudes of k and i. Values from the table may be corrected by dividing k by

$$\left[1 + 6\left(\frac{P}{E_c}\right)\left(\frac{r}{t_n}\right)^{7/3}\left(\frac{R}{r}\right)^{1/3}\right]$$

and dividing i by

$$\left[1 + 3.25\left(\frac{P}{E_c}\right)\left(\frac{r}{t_n}\right)^{5/2}\left(\frac{R}{r}\right)^{2/3}\right]$$

Copyright ASME International
Provided by IHS under license with ASME
No reproduction or networking permitted without license from IHS Not for Resale

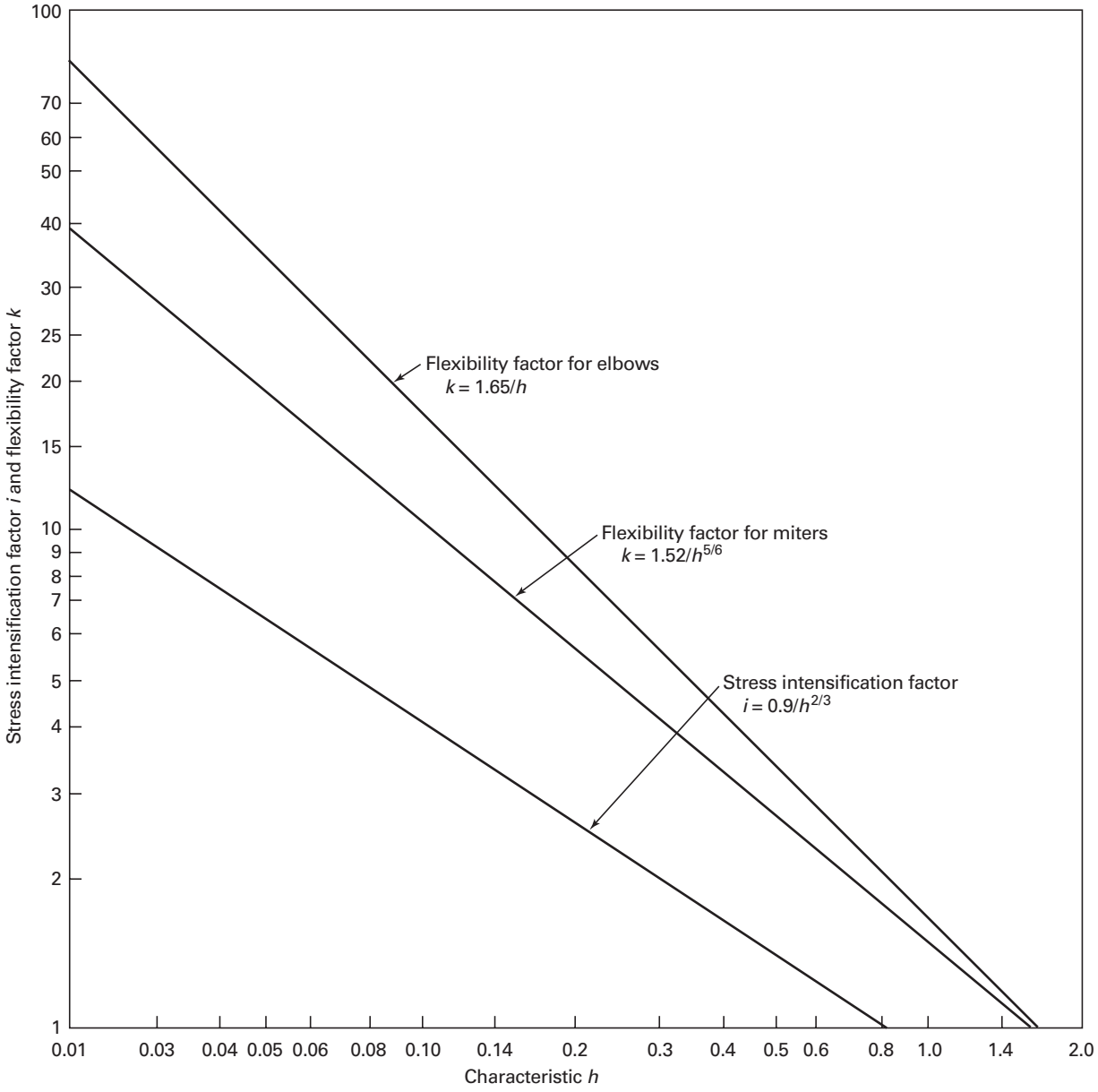

Chart D-1 Flexibility Factor *k* and Stress Intensification Factor *i*

Copyright ASME International
Provided by IHS under license with ASME
No reproduction or networking permitted without license from IHS
Not for Resale

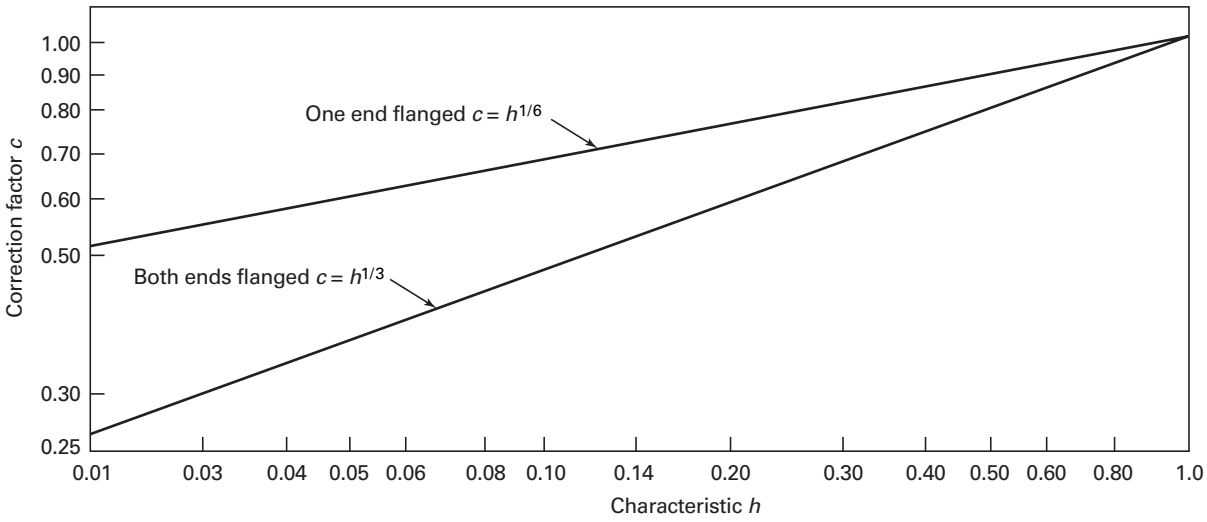

Chart D-2 Correction Factor *c*

Copyright ASME International
Provided by IHS under license with ASME
No reproduction or networking permitted without license from IHS
Not for Resale

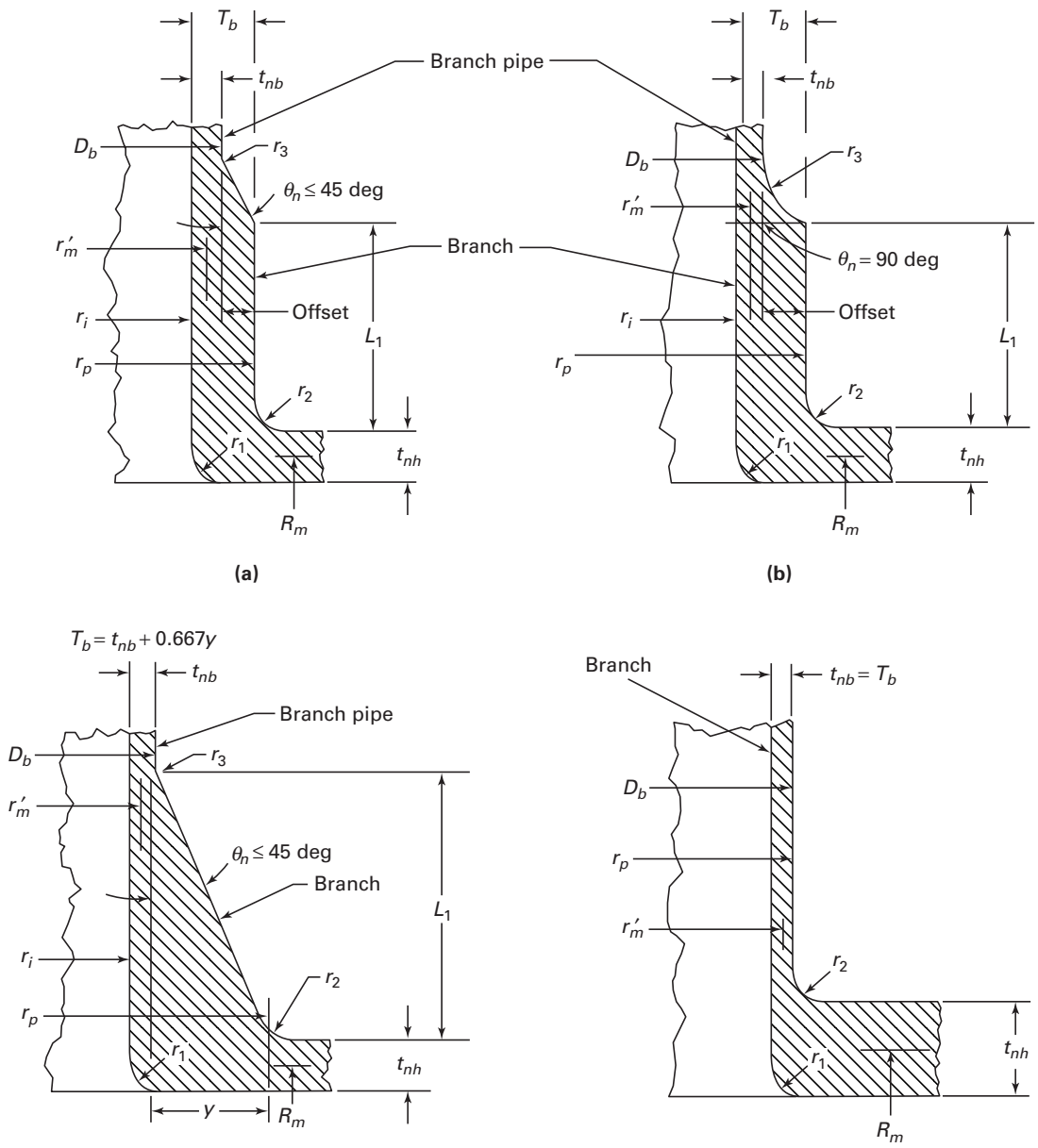

D_b = outside diameter of branch pipe, in. (mm)
L_1 = height of nozzle, in. (mm)
R_m = mean radius of run pipe, in. (mm)
T_b = effective thickness of branch reinforcement, in. (mm)
r_1 = inside radius of branch, in. (mm)
r'_m = mean radius of branch pipe, in. (mm)
r_1, r_2, r_3 = transition radii of branch reinforcement, in. (mm)
r_p = outside radius of branch reinforcement, in. (mm)
t_{nb} = nominal thickness of branch pipes, in. (mm)
t_{nh} = nominal thickness of run pipe, in. (mm)
θ_n = transition angle of branch reinforcement, deg

Fig. D-1 Branch Connection Dimensions

Copyright ASME International
Provided by IHS under license with ASME
No reproduction or networking permitted without license from IHS
Not for Resale

MANDATORY APPENDIX F
REFERENCED STANDARDS[1]
ASME B31.1-2004, Power Piping

(04)

Specific editions of standards incorporated in this Code by reference are shown in this issue of Appendix F. It is not practical to refer to a specific edition of each standard throughout the Code text, but instead, the specific edition reference dates are shown here. Appendix F will be revised at intervals as needed and issued. The names and addresses of the sponsoring organizations are also shown in this issue.

American National Standards

B1.20.3-1976 (R98)
B16.18-1984 (R94)
B18.22M-1981
Z223.1-1999

ASTM Specifications [Note (2)]

A 36/A 36M-00a
A 47/A 47M-99
A 48-94ae1
A 53/A 53M-99b

A 105/A 105M-98
A 106-99e1
A 125-96
A 126-95e1
A 134-96
A 135-97c
A 139-00
A 178/A 178M-95
A 179/A 179M-90a
A 181/A 181M-00
A 182/A 182M-00c
A 192/A 192M-91
A 193/A 193M-00a
A 194/A 194M-00a
A 197/A 197M-00

A 210/A 210M-96
A 213/A 213M-99a
A 214/A 214M-96
A 216/A 216M-93
A 217/A 217M-99
A 229/A 229M-99
A 234/A 234M-00
A 240/A 240M-00
A 242/A 242M-00a
A 249/A 249M-98
A 254-97
A 268/A 268M-00a

ASTM Specifications [Note (2)] (Cont'd)

A 276-00a
A 278-93
A 283/A 283M-00
A 285/A 285M-90 (R96)
A 299/A 299M-97

A 307-00
A 312/A 312M-00c
A 320/A 320M-00b
A 322-91 (R96)
A 333/A 333M-99
A 335/A 335M-00
A 336/A 336M-99
A 350/A 350M-00b
A 351/A 351M-00
A 354-00a
A 358/A 358M-00
A 369/A 369M-00
A 376/A 376M-00a
A 377-99
A 387/A 387M-99
A 389/A 389M-93 (R98)
A 395/A 395M-99

A 403/A 403M-00b
A 409/A 409M-95a
A 420/A 420M-00a
A 426-92 (R97)
A 437/A 437M-00a
A 449-00
A 450/A 450M-96a
A 451-93 (R97)
A 453/A 453M-00
A 479/A 479M-00

A 515/A 515M-92V
A 516/A 516M-90 (R96) (R97)

ASTM Specifications [Note (2)] (Cont'd)

A 530/A 530M-99
A 564/A 564M-99
A 575-96
A 576-90b (R00)
A 587-96

A 671-96
A 672-96
A 691-98

A 714-99
A 789/A 789M-00a
A 790/A 790M-00

B 26/B 26M-99
B 32-00
B 42-98
B 43-98
B 61-93
B 62-93
B 68-99
B 68M-99
B 75-99
B 88-99
B 88M-99

B 108-99
B 111-98
B 111M-98
B 148-97
B 150-98
B 150M-95a
B 151/B 151M-00
B 151M-94

Copyright ASME International
Provided by IHS under license with ASME
No reproduction or networking permitted without license from IHS
Not for Resale

(04)

Referenced Standards (Cont'd)

ASTM Specifications [Note (2)] (Cont'd)

B 161-00
B 163-98a
B 165-93
B 167-98
B 168-98

B 209-00
B 210-00
B 210M-00
B 221-00
B 234-00
B 234M-00
B 241/B 241M-00
B 247-00
B 247M-00
B 251-97
B 251M-97
B 265-99
B 280-99
B 283-99a

B 302-00
B 315-99
B 338-99
B 348-00
B 361-95
B 366-00
B 367-93 (R98)
B 381-00

B 407-96
B 408-96
B 409-96a
B 423-99
B 424-98a
B 425-99
B 462-00a
B 463-99
B 464-99
B 466/B 466M-98
B 467-88 (R97)
B 468-99
B 473-96

B 547/B 547M-00
B 564-00a
B 584-00

B 608-95
B 625-99
B 649-95
B 673-96
B 674-96
B 677-99

ASTM Specifications [Note (2)] (Cont'd)

B 729-00

B 828-00
B 861-00
B 862-99

ASTM Standard Test Methods

D 323-99
E 94-00
E 125-63 (R85)
E 186-91
E 280-93
E 446-91

MSS Standard Practices

SP-6-96
SP-9-97
SP-25-98
SP-42-90
SP-43-91
SP-45-98
SP-51-91
SP-53-95
SP-54-95
SP-55-96
SP-58-93
SP-61-92
SP-67-95
SP-69-96
SP-75-98
SP-79-92
SP-80-97
SP-89-98
SP-93-87
SP-94-92
SP-95-00
SP-97-95
SP-105-96

AWS Specifications

A3.0-94
QC1-88

API Specifications

5L, 38th Edition, 1990

ASME Codes and Standards

Boiler and Pressure Vessel Code, 1992 Edition, including Addenda

B1.1-1989
B1.13M-1995
B1.20.1-1983 (R92)
(ANSI/ASME B 1.20.1)
B16.1-1989
(ASME/ANSI B 16.1)
B16.3-1992
B16.4-1992
B16.5-1996
B16.9-1993
B16.10-1992
B16.11-1991
B16.14-1991
B16.15-1985 (R94)
(ANSI/ASME B16.15)
B16.20-1993
B16.21-1992
B16.22-1995
B16.24-1991
B16.25-1992
B16.28-1994
B16.34-1996 (R98)
B16.42-1987
(ASME/ANSI B16.42)
B16.47-1996 (R98)
B16.48-1997

B18.2.1-1996 (99A)
B18.2.2-1987 (R93)
(ASME/ANSI B18.2.2)
B18.2.3.5M-1979 (R95)
B18.2.3.6M-1979 (R95)
B18.2.4.6M-1979 (R98)
B18.21.1-1994
B18.22.1-1965 (R98)

B31.3-1996
B31.4-1992
B31.8-1995
B36.10M-1996
B36.19M-1985 (R94)
(ANSI/ASME B36.19M)

TDP-1-1985

ASNT Specifications

CP-189-01
SNT-TC-1A (1996) S-98 Addenda

Copyright ASME International
Provided by IHS under license with ASME
No reproduction or networking permitted without license from IHS
Not for Resale

Referenced Standards (Cont'd)

AWWA and ANSI/AWWA Standards

C-110/A 21.10-98
C-111/A 21.11-95
C-115/A 21.15-99
C-150/A 21.50-96
C-151/A 21.51-96
C-153/A 21.53-94

C-200-97
C-207-94
C-208-96

AWWA and ANSI/AWWA Standards (Cont'd)

C-300-97
C-301-99
C-302-95
C-304-99

C-500-93(95a)
C-504-94
C-509-94

C-600-99
C-606-97

National Fire Codes

NFPA 8503-92
NFPA 1963-93

PFI Standard

ES-16-94

NOTES:
(1) The issue date shown immediately following the hyphen after the number of the standard (e.g., B1.1-1989, A 36-89, SP-6-90) is the effective date of issue (edition) of the standard. B18.2.2-1987 (R93) designates specification reaffirmed without change in 1993.
(2) For boiler external piping material application, see para. 123.2.2.

Specifications and standards of the following organizations appear in this Appendix:

AISC American Institute of Steel Construction
One East Wacker Drive
Chicago, IL 60601-2001

ANSI American National Standards Institute
11 W 42nd Street
New York, NY 10036
Phone: 212 642-4900

API American Petroleum Institute
1220 L Street, NW
Washington, DC 20005
Phone: 202 682-8000

ASME The American Society of Mechanical Engineers
Three Park Avenue
New York, NY 10016-5990

ASME Order Department
22 Law Drive
Box 2300
Fairfield, NJ 07007-2300
Phone: 201 882-1167
800-THE-ASME (US & Canada)
Fax: 201 882-1717, 5155

ASNT American Society of Nondestructive Testing
1711 Arlingate Lane
PO Box 28518
Columbus, OH 43228-0518
Phone: 614 274-6003

ASTM American Society for Testing and Materials
100 Barr Harbor Drive
West Conshohocken, PA 19428-2959
Phone: 610 832-9585
Fax: 610 832-9555

AWS American Welding Society
550 NW LeJeune Road
PO Box 351040
Miami, FL 33135
Phone: 305 443-9353

AWWA American Water Works Association
6666 W. Quincy Avenue
Denver, CO 80235
Phone: 303 794-7711

MSS Manufacturers Standardization Society of the Valve and Fittings Industry, Inc.
127 Park Street, NE
Vienna, VA 22180
Phone: 703 281-6613

NFPA National Fire Protection Association
1 Batterymarch Park
PO Box 9101
Quincy, MA 02269-9101
Phone: 617 770-3000
Fax: 617 770-0700

PFI Pipe Fabrication Institute
PO Box 173
Springdale, PA 15144
Phone: 412 274-4722

PPI Plastic Pipe Institute
1275 K Street, NW
Suite 400
Washington, DC 20005
Phone: 202 371-5200
Fax: 202 371-1022

Copyright ASME International
Provided by IHS under license with ASME
No reproduction or networking permitted without license from IHS
Not for Resale

MANDATORY APPENDIX G
NOMENCLATURE

This Appendix is a compliation of the nomenclature used within this Code. Included are the term definitions and units that can be uniformly applied. These terms are also defined at a convenient location within the Code. When used elsewhere within the Code, definitions given here shall be understood to apply.

Symbol	Definition	Units		References	
		U.S.	SI	Paragraph	Table/Fig./App.
A	Corrosion, erosion, and mechanical allowances (including threading, grooving)	in.	mm	104.1.2(A)[Eqs.(3), (3A), (4), (4A)] 104.4.1(B) 104.5.2(B) 104.5.3(A) 104.3.1	. . .
Area available for reinforcement:					
A_1	in run pipe	in.^{2}	mm^2	104.3.1(D.2)	104.3.1(D) 104.3.1(G)
A_2	in branch pipe	in.^{2}	mm^2	104.3.1(D.2)	104.3.1(D) 104.3.1(G)
A_3	by deposited metal beyond outside diameter of run and branch and for fillet weld attachments of rings, pads, and saddles	in.^{2}	mm^2	104.3.1(D.2)	104.3.1(D)
A_4	by reinforcing ring, pad, or integral reinforcement	in.^{2}	mm^2	104.3.1(D.2)	104.3.1(D) 104.3.1(G)
A_5	in saddle on right angle connection	in.^{2}	mm^2	104.3.1(D.2)	104.3.1(D)
A_7	Required reinforcement area	in.^{2}	mm^2	104.3.1(D.2)	104.3.1(D) 104.3.1(G)
b	Subscript referring to branch	. . .	. . .	104.3.1(D.2)	104.3.1(D)
c	Flanged elbow correction factor	. . .	. . .	. . .	Table D-1 Chart D-2
C	Cold-spring factor	. . .	. . .	119.10.1[Eqs. (9), (10)]	. . .
C_x	Size of fillet weld for socket welding components other than flanges	in.	mm	. . .	127.4.4(C)
d	Inside diameter of pipe	in.	mm	104.1.2(A)[Eqs. (3A), (4A)]	. . .
d_1	Inside center line longitudinal direction of the finished branch opening in the run of the pipe	in.	mm	. . .	104.3.1(D)
d_2	Half-width of reinforcement zone	in.	mm	104.3.1(D.2)	104.3.1(D)
d_5	Diameter of finished opening	in.	mm	104.4.1(C)	. . .
d_6	Inside or pitch diameter of gasket	in.	mm	104.5.3(A)	. . .
d_b	Corroded internal diameter of branch pipe	in.	mm	104.3.1(G.4)	104.3.1(G)
d_c	Corroded internal diameter of extruded outlet	in.	mm	104.3.1(G.4)	104.3.1(G)
d_n	Nominal inside diameter of pipe	in.	mm	102.3.2(D)	. . .

Copyright ASME International
Provided by IHS under license with ASME
No reproduction or networking permitted without license from IHS
Not for Resale

Nomenclature (Cont'd)

Symbol	Definition	Units		References	
		U.S.	SI	Paragraph	Table/Fig./App.
d_r	Corroded internal diameter of run	in.	mm	104.3.1(G.4)	104.3.1(G)
D	Nominal pipe size	in.	mm	119.7.1(A.3)	. . .
D_n	Nominal outside diameter of pipe	in.	mm	102.3.2(D)	. . .
D_o	Outside diameter of pipe	in.	mm	102.3.2(D) 104.1.2(A)[Eqs. (3), (4)] 104.3.1(D.2) 104.8.1[Eqs. (11a), (11b)] 104.8.2[Eqs. (12a), (12b)]	App. D
D_{ob}	Outside diameter of branch	in.	mm	. . .	App. D
E	Weld joint efficiency factor	. . .	. . .	104.1.2(A)[Eqs (3), (3A), (4), (4A)] 104.4.1(B)	102.4.3 App. A Notes to Tables A-1 thru A-4 and A-7
E	Young's modulus of elasticity (used with subscripts)	psi	MPa	119.6.2 119.6.4 119.10.1[Eqs. (9), (10)]	App. C
F	Casting quality factor	. . .	. . .	104.1.2(A)	App. A Notes to Tables A-1 thru A-7
f	Stress range reduction factor	. . .	. . .	102.3.2(C) 104.8.3[Eqs. (13a), (13b)]	102.3.2(C)
h	Subscript referring to run or header	. . .	. . .	104.3.1(D.2)	104.3.1(D)
h	Flexibility characteristic, to compute i, k	. . .	. . .	. . .	App. D
h_o	Height of extruded lip	in.	mm	104.3.1(G.4)	104.3.1(G)
i	Stress intensification factor	. . .	. . .	104.8.1[Eqs. (11a), (11b)] 104.8.2[Eqs. (12a), (12b)] 104.8.3[Eqs. (13a), (13b)]	App. D
I	Lorenz equation compensation factor	. . .	. . .	102.4.5[Eqs.(3B), (3C), (3D), (3E)]	
k	Factor for Occasional Loads	. . .	. . .	104.8.2[Eqs. (12a), (12b)]	. . .
k	Flexibility factor	. . .	. . .	. . .	App. D
L	Developed length of line axis	ft	m	119.7.1(a.3)	. . .
L_4	Altitude of reinforcing zone outside run pipe	in.	mm	104.3.1(D.2)	104.3.1(D)
L_8	Altitude of reinforcing zone for extruded outlet	in.	mm	104.3.1(G.4)	104.3.1(G)

Copyright ASME International
Provided by IHS under license with ASME
No reproduction or networking permitted without license from IHS Not for Resale

Nomenclature (Cont'd)

Symbol	Definition	Units		References	
		U.S.	SI	Paragraph	Table/Fig./App.
M	Moment of bending or torsional force (used with subscripts to define applications as shown in referenced paragraphs)	in.-lb, ft-lb	N·mm	104.8.1[Eqs. (11a), (11b)] 104.8.2[Eqs. (12a), (12b)] 104.8.3[Eqs. (13a), (13b)] 104.8.4	104.8.4
MAWP	Maximum Allowable Working Pressure	psi	kPa	100.2	. . .
MSOP	Maximum sustained operating pressure	psi	kPa	101.2.2 102.2.3 122.1.1(B) 122.1.2(A)	. . .
N	Equivalent full temperature cycles	. . .	. . .	102.3.2(C)[Eq. (2)]	102.3.2(C)
N_n	Number of cycles of lesser temperature change, $n = 1, 2, \ldots$	. . .	. . .	102.3.2(C)[Eq. (2)]	. . .
N_E	Number of cycles of full temperature change	. . .	. . .	102.3.2(C)[Eq. (2)]	. . .
NPS	Nominal pipe size	in.	. . .	General	. . .
P	Internal design gage pressure of pipe, component	psi	kPa	101.2.2 102.3.2(D) 104.1.2(A)[Eqs. (3), (3A), (4), (4A)] 104.4.1(B) 104.5.1(A) 104.5.2(B) 104.5.3(A)[Eq. (7)] 104.8.1[Eqs. (11a), (11b)] 122.1.2(A) 122.1.3(A) 122.1.4(B) 122.1.6(B)	. . .
r	ratio of partial T to maximum T (used with subscripts)	. . .	. . .	102.3.2(C)[Eq. (2)]	. . .
r	Mean radius of pipe using nominal wall t_n	in.	mm	104.3.3	App. D
r_1	Half width of reinforcement zone	in.	mm	104.3.1(G.4)	104.3.1(G)
r_b	Branch mean cross-sectional radius	in.	mm	104.8.4	. . .
r_o	Radius of curvature of external curved portion	in.	mm	104.3.1(G.4)	104.3.1(G)
r_x	External crotch radius of welded-in contour inserts	in.	mm	. . .	App. D
R	Reaction moment in fexibility analysis (used with subscripts)	in.-lb, ft-lb	N·mm	119.10.1[Eqs. (9), (10)]	. . .
R	Center line radius of elbow or bend, and effective "radius" of miter bends	in.	mm	102.4.5(B) 104.3.3(C.3.1)	. . . App. D
s	Miter spacing pipe center line	in.	mm	104.3.3(C.3.1)	App. D
S	Basic material allowable stress	psi	MPa	102.3.1(A)	App. A Notes to

--`,,```,,,,````-`-`,,`,,`,`,,`---
Copyright ASME International
Provided by IHS under license with ASME
No reproduction or networking permitted without license from IHS
Not for Resale

Nomenclature (Cont'd)

Symbol	Definition	Units		References	
		U.S.	SI	Paragraph	Table/Fig./App.
				121.1.2(A) 122.1.3(A)	Tables A-1 thru A-7
S_a	Bolt design stress at atmospheric temperature	psi	kPa	104.5.1(A)	. . .
S_b	Bolt design stress at design temperature	psi	kPa	104.5.1(A)	. . .
S_c	Basic material allowable stress at minimum (cold) temperature	psi	MPa	102.3.2(C)[Eq. (1)]	. . .
S_f	Allowable stress for flange material or pipe	psi	kPa	104.5.1(A)	. . .
S_h	Basic material allowable stress at maximum (hot) temperature	psi	MPa	102.3.2(C) 102.3.2(D) 104.8.1[Eq. (11a)] 104.8.2[Eqs. (12a), (12b)] 119.10.1	. . .
S_{lp}	Longitudinal pressure stress	psi	MPa	102.3.2(D) 104.8	. . .
S_A	Allowable stress range for expansion stress	psi	MPa	102.3.2(C)[Eq. (1)] 104.8.3[Eqs. (13a), (13b)]	. . .
S_E	Computed thermal expansion stress range	psi	MPa	104.8.3[Eqs. (13a), (13b)] 119.10.1[Eq. (10)]	. . .
SE	Allowable stress (including weld joint efficiency factor)	psi	MPa	102.3.1(A) 104.1.2(A)[Eqs. (3), (3A), (4), (4A)] 104.4.1(B) 104.5.2(B)[Eq. (6)] 104.5.3(A)[Eq. (7)]	App. A
SF	Allowable stress (including casting quality factor)	psi	MPa	104.1.2(A)	. . .
S_L	Longitudinal stress due to pressure, weight, and other sustained loads	psi	kPa	102.3.2(D) 104.8.1[Eqs. (11A), (11B)]	. . .
t	Pressure design thickness pipe, components (used with subscripts)	in.	mm	104.1.2(A)[Eqs. (3), (3A), (4), (4A)] 104.3.1(D.2) 104.3.1(G.4) 104.3.3(C.3.1) 104.3.3(C.3.2) 104.4.1(B) 104.5.2(B) 104.5.3(A)[Eq. (7)] 104.8.1 104.8.4(C) 127.4.8(B) 132.4.2(E)	104.3.1(G) 104.5.3 127.4.8(D)
t_b	Required thickness of branch pipe	in.	mm	104.3.1(G.4)	104.3.1(G)
t_c	Throat thickness of cover fillet weld, branch	in.	mm	127.4.8(B)	127.4.8(D)

--`,,```,,,,````-`-`,,`,,`,`,,`---

Copyright ASME International
Provided by IHS under license with ASME
No reproduction or networking permitted without license from IHS Not for Resale

Nomenclature (Cont'd)

Symbol	Definition	Units		References	
		U.S.	SI	Paragraph	Table/Fig./App.
	conn.			132.4.2(E)	
t_e	Effective branch wall thickness	in.	mm	104.8.4(C)	. . .
t_h	Required thickness of header or run	in.	mm	104.3.1(G)	104.3.1(D) 104.3.1(G)
t_m	Minimum required thickness of component, including allowances (c) for mechanical joining, corrosion, etc. (used with subscripts), viz., t_{mb} = minimum thickness of branch t_{mh} = minimum thickness of header	in.	mm	104.1.2(A)[Eqs. (3), (3A), (4), (4A)] 104.3.1(D.2) 104.3.1(G) 104.3.1(G.4) 104.3.3(C.3.1) 104.3.3(C.3.2) 104.4.1(B) 104.5.2(B)[Eq. (6)] 104.5.3(A)	127.4.2 104.3.1(D) 104.3.1(G)
t_n	Nominal wall thickness of component (used with subscripts), viz., t_{nb} = nominal wall thickness of branch t_{nh} = nominal wall thickness of header t_{nr} = nominal thickness of reinforcement	in.	mm	102.3.2(D) 104.3.3 104.8.1 104.8.4 127.4.8(B) 132.4.2(E)	127.4.4(B), (C) 127.4.8(D) App. D
t_p	Pressure design thickness	in.	mm	104.5.3(A)[Eq. (7)]	. . .
t_r	Thickness of reinforcing pad or saddle	in.	mm	104.3.1(D.2) 127.4.8(B)	104.3.1(D) 127.4.8(D) Table D
t_s	Wall thickness of segment or miter	in.	mm	104.3.3(C.3)	App. D
t_w	Weld thickness	in.	mm	104.3.1(C.2)	127.4.8(F)
T	Pipe wall thickness (measured or minimum, in accordance with purchase specification used with or without subscripts), viz., T_b = thickness of branch T_h = thickness of header, etc	in.	mm	104.3.1(D.2) 104.3.1(G.4)	104.3.1(D) 104.3.1(G) App. D
T_c	Crotch thickness of welded-in contour inserts	in.	mm	. . .	App. D
T_o	Corroded finished thickness extruded outlet	in.	mm	104.3.1(G.4)	104.3.1(G)
U	Anchor distance (length of straight line joining anchors)	ft	m	119.7.1(A.3)	. . .
$x_{\min}$	Size of fillet weld for slip-on and socket welding flanges or socket wall for socket welds	in.	mm	. . .	127.4.4(B)
y	A coefficient having values given in Table 104.1.2(A)	. . .	. . .	104.1.2[Eqs. (3), (3A), (4), (4A)]	104.1.2(A)
Y	Resultant of movement to be absorbed by pipelines	. . .	. . .	119.7.1(A.3)	. . .
Z	Section modulus of pipe	$in.^3$	mm^3	104.8.1[Eqs. (11a), (11b)] 104.8.2[Eqs. (12a), (12b)]	104.8.4(C)

Copyright ASME International
Provided by IHS under license with ASME
No reproduction or networking permitted without license from IHS
Not for Resale

Nomenclature (Cont'd)

Symbol	Definition	Units		References	
		U.S.	SI	Paragraph	Table/Fig./App.
				104.8.3[Eqs. (13a), (13b)]	
α	Angle between axes of branch and run	deg	deg	104.3.1(D.2)	104.3.1(D)
α	Reducer cone angle	deg	deg	. . .	Table D-1
β	Length of segment at crotch	in.	mm	. . .	App. D
δ	Mismatch or offset	in.	mm	127.3.1(C)	App. D
ΔT	Range of temperature change	°F	°C	102.3.2(C)	. . .
θ	Angle of miter cut	deg	deg	104.3.3	App. D
≥	Equal to or greater than	. . .	. . .	. . .	. . .
≤	Equal to or less than	. . .	. . .	. . .	. . .

Copyright ASME International
Provided by IHS under license with ASME
No reproduction or networking permitted without license from IHS
Not for Resale

MANDATORY APPENDIX H
PREPARATION OF TECHNICAL INQUIRIES

H-1 INTRODUCTION

The ASME B31 Committee, Code for Pressure Piping, will consider written requests for interpretations and revisions of the Code rules, and develop new rules if dictated by technical development. The Committee's activities in this regard are limited strictly to interpretations of the rules or to the consideration of revisions to the present rules on the basis of new data or technology. The Introduction to this Code states "It is the owner's responsibility to determine which Code Section is applicable to a piping installation." The Committee will not respond to inquiries requesting assignment of a Code Section to a piping installation. As a matter of published policy, ASME does not approve, certify, rate, or endorse any item, construction, proprietary device, or activity, and, accordingly, inquiries requiring such consideration will be returned. Moreover, ASME does not act as a consultant on specific engineering problems or on the general application or understanding of the Code rules. If, based on the inquiry information submitted, it is the opinion of the Committee that the inquirer should seek professional assistance, the inquiry will be returned with the recommendation that such assistance be obtained.

Inquiries that do not provide the information needed for the Committee's full understanding will be returned.

H-2 REQUIREMENTS

Inquiries shall be limited strictly to interpretations of the rules or to the consideration of revisions to the present rules on the basis of new data or technology. Inquiries shall meet the following requirements:

(a) Scope. Involve a single rule or closely related rules in the scope of the Code. An inquiry letter concerning unrelated subjects will be returned.

(b) Background. State the purpose of the inquiry, which may be either to obtain an interpretation of Code rules, or to propose consideration of a revision to the present rules. Provide concisely the information needed for the Committee's understanding of the inquiry, being sure to include reference to the applicable Code Section, Edition, Addenda, paragraphs, figures, and tables. If sketches are provided, they shall be limited to the scope of the inquiry.

(c) Inquiry Structure

(1) Proposed Question(s). The inquiry shall be stated in a condensed and precise question format, omitting superfluous background information, and, where appropriate, composed in such a way that "yes" or "no" (perhaps with provisos) would be an acceptable reply. The inquiry statement should be technically and editorially correct.

(2) Proposed Reply(ies). Provide a proposed reply stating what it is believed that the Code requires. If in the inquirer's opinion, a revision to the Code is needed, recommended wording shall be provided in addition to information justifying the change.

H-3 SUBMITTAL

Inquiries should be submitted in typewritten form; however, legible handwritten inquiries will be considered. They shall include the name and mailing address of the inquirer, and be mailed to the following address:

Secretary
ASME B31 Committee
Three Park Avenue
New York, NY 10016-5990

Copyright ASME International
Provided by IHS under license with ASME
No reproduction or networking permitted without license from IHS
Not for Resale

MANDATORY APPENDIX J
QUALITY CONTROL REQUIREMENTS FOR BOILER EXTERNAL PIPING (BEP)

FOREWORD

This Appendix contains the quality control requirements for boiler external piping. The following is that portion of Appendix A-300 Quality Control System of the ASME Boiler and Pressure Vessel Code, Section I, which is applicable to BEP.

J-1 QUALITY CONTROL SYSTEM

J-1.1 General

J-1.1.1 Quality Control System. The Manufacturer or assembler shall have and maintain a quality control system which will establish that all Code requirements, including material, design, fabrication, examination (by the Manufacturer), and inspection of boilers and boiler parts (by the Authorized Inspector), will be met. Provided that Code requirements are suitably identified, the system may include provisions for satisfying any requirements by the Manufacturer or user which exceed minimum Code requirements and may include provisions for quality control of non-Code work. In such systems, the Manufacturer may make changes in parts of the system which do not affect the Code requirements without securing acceptance by the Authorized Inspector. Before implementation, revisions to quality control systems of Manufacturers and assemblers of safety and safety relief valves shall have been found acceptable to an ASME designee if such revisions affect Code requirements.

The system that the Manufacturer or assembler uses to meet the requirements of this Section must be one suitable for his own circumstances. The necessary scope and detail of the system shall depend on the complexity of the work performed and on the size and complexity of the Manufacturer's (or assembler's) organization. A written description of the system the Manufacturer or assembler will use to produce a Code item shall be available for review. Depending upon the circumstances, the description may be brief or voluminous.

The written description may contain information of proprietary nature relating to the Manufacturer's (or assembler's) processes. Therefore, the Code does not require any distribution of this information, except for the Authorized Inspector or ASME designee.

It is intended that information learned about the system in connection with evaluation will be treated as confidential and that all loaned descriptions will be returned to the Manufacturer upon completion of the evaluation.

J-1.2 Outline of Features to Be Included in the Written Description of the Quality Control System

The following is a guide to some of the features which should be covered in the written description of the quality control system and which is equally applicable to both shop and field work.

J-1.2.1 Authority and Responsibility. The authority and responsibility of those in charge of the quality control system shall be clearly established. Persons performing quality control functions shall have sufficient and well-defined responsibility, the authority, and the organizational freedom to identify quality control problems and to initiate, recommend, and provide solutions.

J-1.2.2 Organization. An organization chart showing the relationship between management and engineering, purchasing, manufacturing, field assembling, inspection, and quality control is required to reflect the actual organization. The purpose of this chart is to identify and associate the various organizational groups with the particular function for which they are responsible. The Code does not intend to encroach on the Manufacturer's right to establish, and from time to time to alter, whatever form of organization the Manufacturer considers appropriate for its Code work.

J-1.2.3 Drawings, Design Calculations, and Specification Control. The Manufacturer's or assembler's quality control system shall provide procedures which will assure that the latest applicable drawings, design calculations, specifications, and instructions, required by the Code, as well as authorized changes, are used for manufacture, assembly, examination, inspection, and testing.

J-1.2.4 Material Control. The Manufacturer or assembler shall include a system of receiving control which will insure that the material received is properly identified and has documentation, including required material certifications or material test reports, to satisfy Code requirements as ordered. The material control system shall insure that only the intended material is used in Code construction.

Copyright ASME International
Provided by IHS under license with ASME
No reproduction or networking permitted without license from IHS
Not for Resale

J-1.2.5 Examination and Inspection Program. The Manufacturer's quality control system shall describe the fabrication operations, including examinations, sufficiently to permit the Authorized Inspector to determine at what stages specific inspections are to be performed.

J-1.2.6 Correction of Nonconformities. There shall be a system agreed upon with the Authorized Inspector for correction of nonconformities. A nonconformity is any condition which does not comply with the applicable rules of this Section. Nonconformities must be corrected or eliminated in some way before the completed component can be considered to comply with this Section.

J-1.2.7 Welding. The quality control system shall include provisions for indicating that welding conforms to requirements of Section IX as supplemented by this Section.

J-1.2.8 Nondestructive Examination. The quality control system shall include provisions for identifying nondestructive examination procedures the Manufacturer will apply to conform with requirements of this Section.

J-1.2.9 Heat Treatment. The quality control system shall provide controls to assure that heat treatments as required by the rules of this Section are applied. Means shall be indicated by which the Authorized Inspector can satisfy himself that these Code heat treatment requirements are met. This may be by review of furnace time – temperature records or by other methods as appropriate.

J-1.2.10 Calibration of Measurement and Test Equipment. The Manufacturer or assembler shall have a system for the calibration of examination, measuring, and test equipment used in fulfillment of requirements of this Section.

J-1.2.11 Records Retention. The Manufacturer or assembler shall have a system for the maintenance of radiographs and Manufacturers' Data Reports as required by this Section.

J-1.2.12 Sample Forms. The forms used in the quality control system and any detailed procedures for their use shall be available for review. The written description shall make necessary references to these forms.

J-1.2.13 Inspection of Boilers and Boiler Parts

J-1.2.13.1 Inspection of boilers and boiler parts shall be by the Authorized Inspector described in PG-91.

J-1.2.13.2 The written description of the quality control system shall include reference to the Authorized Inspector.

J-1.2.13.2.1 The Manufacturer (or assembler) shall make available to the Authorized Inspector at the Manufacturer's plant (or construction site) a current copy of the written description or the applicable quality control system.

J-1.2.13.2.2 The Manufacturer's quality control system shall provide for the Authorized Inspector at the Manufacturer's plant to have access to all drawings, calculations, specifications, procedures, process sheets, repair procedures, records, test results, and any other documents as necessary for the Inspector to perform his duties in accordance with this Section. The Manufacturer may provide such access either to his own files of such documents or by providing copies to the Inspector.

J-1.2.14 Inspection of Safety and Safety Relief Valves

J-1.2.14.1 Inspection of safety and safety relief valves shall be by designated representative of the ASME, as described in PG-73.3.

J-1.2.14.2 The written description of the quality control system shall include reference to the ASME designee.

J-1.2.14.2.1 The valve Manufacturer (or assembler) shall make available to the ASME designee at the Manufacturer's plant a current copy of the written description of the applicable quality control system.

J-1.2.14.2.2 The valve Manufacturer's (or assembler's) quality control system shall provide for the ASME designee to have access to all drawings, calculations, specifications, procedures, process sheets, repair procedures, records, test results, and any other documents as necessary for the designee to perform his duties in accordance with this Section. The Manufacturer may provide such access either to his own files of such documents or by providing copies to the designee.

Copyright ASME International
Provided by IHS under license with ASME
No reproduction or networking permitted without license from IHS Not for Resale

NONMANDATORY APPENDICES

NONMANDATORY APPENDIX II
RULES FOR THE DESIGN OF SAFETY VALVE INSTALLATIONS[1]

FOREWORD

ASME B31.1 contains rules governing the design, fabrication, materials, erection, and examination of power piping systems. Experience over the years has demonstrated that these rules may be reasonably applied to safety valve installations. Nevertheless, instances have occurred wherein the design of safety valve installations may not have properly and fully applied the ASME B31.1 rules. Accordingly, this nonmandatory Appendix to ASME B31.1 has been prepared to illustrate and clarify the application of ASME B31.1 rules to safety valve installations. To this end, Appendix II presents the designer with design guidelines and alternative design methods.

II-1.0 SCOPE AND DEFINITION

II-1.1 Scope

The scope of Appendix II is confined to the design of the safety valve installations as defined in para. 1.2 of this Appendix. The loads acting at the safety valve station will affect the bending moments and stresses in the complete piping system, out to its anchors and/or extremities, and it is the designer's responsibility to consider these loads. Appendix II, however, deals primarily with the safety valve installation, and not the complete piping system.

The design of the safety valve installation requires that careful attention be paid to

(A) all loads acting on the system

(B) the forces and bending moments in the piping and piping components resulting from the loads

(C) the loading and stress criteria

(D) general design practices

All components in the safety valve installation must be given consideration, including the complete piping system, the connection to the main header, the safety valve, valve and pipe flanges, the downstream discharge or vent piping, and the system supports. The scope of this Appendix is intended to cover all loads on all components. It is assumed that the safety valve complies with the requirements of American National Standards prescribed by ASME B31.1 for structural integrity.

This Appendix has application to either safety, relief, or safety-relief valve installations. For convenience, however, the overpressure protection device is generally referred to as a safety valve. The loads associated with relief or safety-relief valve operation may differ significantly from those of safety valve operation, but otherwise the rules contained herein are equally applicable to each type of valve installation. See para. II-1.2 for definition.

This Appendix provides analytic and nomenclature definition figures to assist the designer, and is not intended to provide actual design layout (drains, drip pans, suspension, air gaps, flanges, weld ends, and other design details are not shown). Sample problems have been provided at the end of the text to assist the designer in application of the rules in this Appendix.

II-1.2 Definitions (Valve Descriptions Follow the Definitions Given in Section I of the ASME Boiler and Pressure Vessel Code)

Safety Valve: an automatic pressure relieving device actuated by the static pressure upstream of the valve and characterized by full opening pop action. It is used for gas or vapor service.

Relief Valve: an automatic pressure relieving device actuated by the static pressure upstream of the valve which opens further with the increase in pressure over the opening pressure. It is used primarily for liquid service.

Safety Relief Valve: an automatic pressure actuated relieving device suitable for use either as a safety valve or relief valve, depending on application.

[1] Nonmandatory Appendices are identified by a Roman numeral; mandatory Appendices are identified by a letter. Therefore, Roman numeral I is not used in order to avoid confusion with the letter I.

Copyright ASME International
Provided by IHS under license with ASME
No reproduction or networking permitted without license from IHS
Not for Resale

Power-Actuated Pressure Relieving Valve: a relieving device whose movements to open or close are fully controlled by a source of power (electricity, air, steam, or hydraulic). The valve may discharge to atmosphere or to a container at lower pressure. The discharge capacity may be affected by the downstream conditions, and such effects shall be taken into account. If the power-actuated pressure relieving valves are also positioned in response to other control signals, the control impulse to prevent overpressure shall be responsive only to pressure and shall override any other control function.

Open Discharge Installation: an installation where the fluid is discharged directly to the atmosphere or to a vent pipe that is uncoupled from the safety valve. Figure II-1-2(A) shows a typical open discharge installation with an elbow installed at the valve discharge to direct the flow into a vent pipe. The values for *l* and m on Fig. II-1-2(A) are upper limits for which the rules for open discharge systems may be used. *l* shall be limited to a value less than or equal to $4D_o$; *m* shall be limited to a value less than or equal to $6D_o$ where D_o is the outside diameter of the discharge pipe. Open discharge systems which do not conform to these limits shall be evaluated by the designer for the applicability of these rules.

Closed Discharge Installation: an installation where the effluent is carried to a distant spot by a discharge pipe which is connected directly to the safety valve. Figure II-1-2(B) shows a typical closed discharge system.

Safety Valve Installation: the safety valve installation is defined as that portion of the system shown on Figs. II-1-2(A) and II-1-2(B). It includes the run pipe, branch connection, the inlet pipe, the valve, the discharge piping, and the vent pipe. Also included are the components used to support the system for all static and dynamic loads.

II-2.0 LOADS

II-2.1 Thermal Expansion

Loads acting on the components in the safety valve installation and the displacements at various points due to thermal expansion of the piping shall be determined by analyzing the complete piping system out to its anchors, in accordance with procedures in para. 119.

II-2.1.1 Installations With Open Discharge. For safety valve installations with open discharge, there will be no thermal expansion loads acting on the discharge elbow, the valve, or the valve inlet other than that from restraint to thermal expansion as described below. Restraint to thermal expansion can sometimes occur due to drain lines, or when structural supports are provided to carry the reaction forces associated with safety valve lift. Examples of such structural supports are shown in Fig. II-6-1 sketch (b). When such restraints exist, the thermal expansion loads and stresses shall be calculated and effects evaluated.

II-2.1.2 Installations With Closed Discharge. Loads due to thermal expansion and back pressure of a safety valve installation with a closed discharge can be high enough to cause malfunction of the valve, excessive leakage of the valve or flange, or overstress of other components. The loads due to thermal expansion shall be evaluated for all significant temperature combinations, including the cases where the discharge piping is hot following safety valve operation.

II-2.2 Pressure

Pressure loads acting on the safety valve installation are important from two main considerations. The first consideration is that the pressure acting on the walls of the safety valve installation can cause membrane stresses which could result in rupture of the pressure retaining parts. The second consideration is that the pressure effects associated with discharge can cause high loads acting on the system which create bending moments throughout the piping system. These pressure effects are covered in para. II-2.3.

All parts of the safety valve installation must be designed to withstand the design pressures without exceeding the Code allowable stresses. The branch connection, the inlet pipe, and the inlet flanges shall be designed for the same design pressure as that of the run pipe. The design pressure of the discharge system will depend on the safety valve rating and on the configuration of the discharge piping. The open discharge installation and the closed discharge installation present somewhat different problems in the determination of design pressures, and these problems are discussed in the paragraphs below.

II-2.2.1 Design Pressure and Velocity for Open Discharge Installation Discharge Elbows and Vent Pipes. There are several methods available to the designer for determining the design pressure and velocity in the discharge elbow and vent pipe. It is the responsibility of the designer to assure himself that the method used yields conservative results. A method for determining the design pressures and velocities in the discharge elbow and vent pipe for open discharge installation is shown below and illustrated in the sample problem.

(A) First, calculate the design pressure and velocity for the discharge elbow.

(A.1) Determine the pressure P_1 that exists at the discharge elbow outlet (Fig. II-2-1).

$$P_1 = \frac{W}{A_1}\frac{(b-1)}{b}\sqrt{\frac{2(h_o - a)J}{g_c\,(2b-1)}}$$

(A.2) Determine the velocity V_1 that exists at the discharge elbow outlet (Fig. II-2-1).

Copyright ASME International
Provided by IHS under license with ASME
No reproduction or networking permitted without license from IHS
Not for Resale

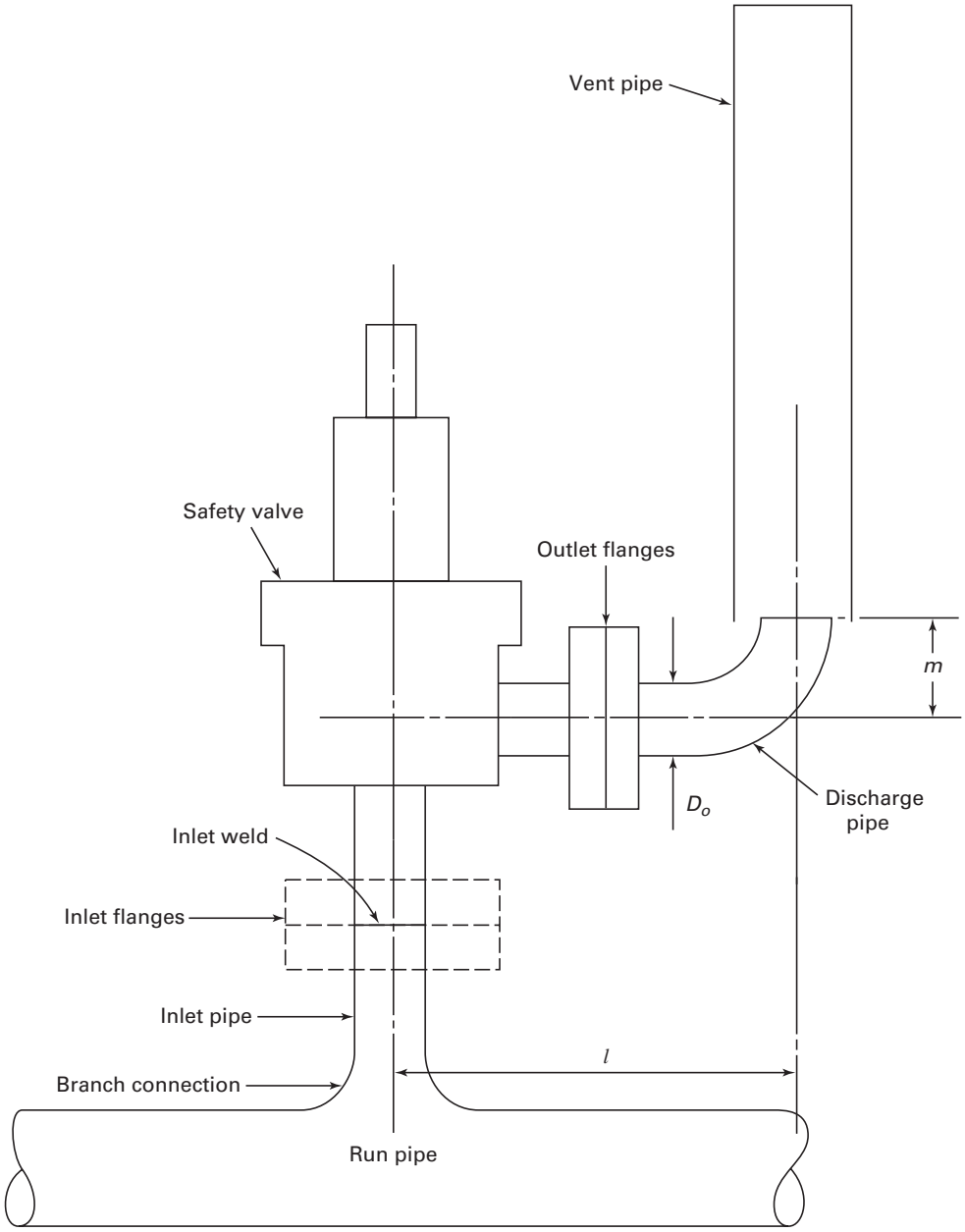

Fig. II-1-2(A) Safety Valve Installation (Open Discharge System)

$$V_1 = \sqrt{\frac{2g_c J(h_o - a)}{(2b - 1)}}$$

where

W = actual mass flow rate, lbm/sec
A_1 = discharge elbow area, in.^{2}
h_o = stagnation enthalpy at the safety valve inlet, Btu/lbm
J = 778.16 ft-lbf/Btu
g_c = gravitational constant
= 32.2 lbm-ft/lbf-sec^2
P_1 = pressure, psia (lbf/in.^{2}, absolute)
V_1 = ft/sec

Common values of a and b are listed in Table II-2.2.1.

(A.3) Determine the safety valve outlet pressure P_{1a} at the inlet to the discharge elbow (Fig. II-2-1).

(A.3.1) Determine the length to diameter ratio (dimensionless) for the pipe sections in the discharge elbow (L/D).

$$L/D = \frac{L_{\max.}}{D}$$

Copyright ASME International
Provided by IHS under license with ASME
No reproduction or networking permitted without license from IHS
Not for Resale

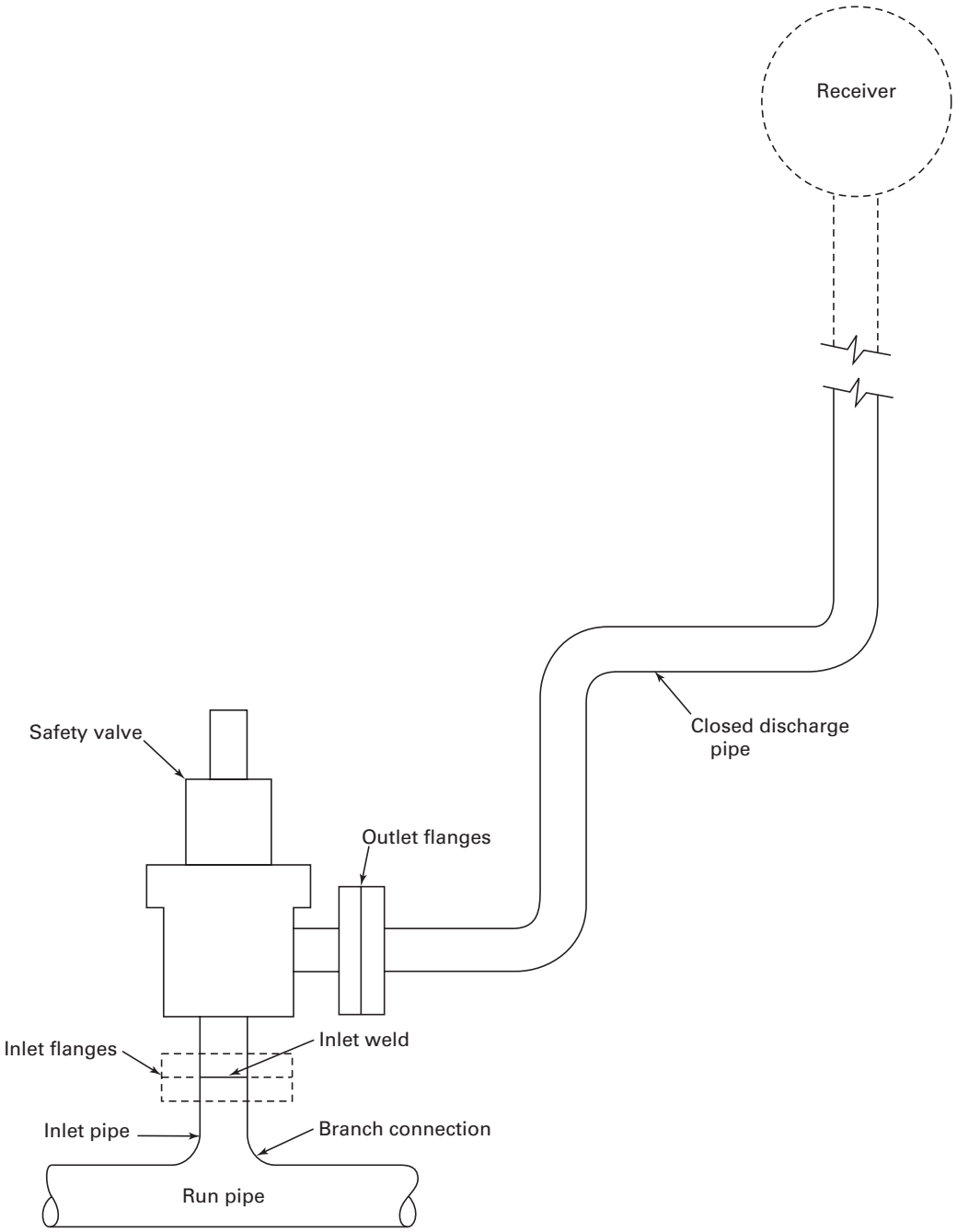

Fig. II-1-2(B) Safety Valve Installation (Closed Discharge System)

(A.3.2) Determine a Darcy-Weisbach friction factor f to be used. (For steam, a value of 0.013 can be used as a good estimate since f will vary slightly in turbulent pipe flow.)

(A.3.3) Determine a specific heat ratio (for superheated steam, $k = 1.3$ can be used as an estimate — for saturated steam, $k = 1.1$).

(A.3.4) Calculate

$$f\left(\frac{L_{\text{max.}}}{D}\right)$$

(A.3.5) Enter Chart II-1 with value of

$$f\left(\frac{L_{\text{max.}}}{D}\right)$$

Copyright ASME International
Provided by IHS under license with ASME
No reproduction or networking permitted without license from IHS
Not for Resale

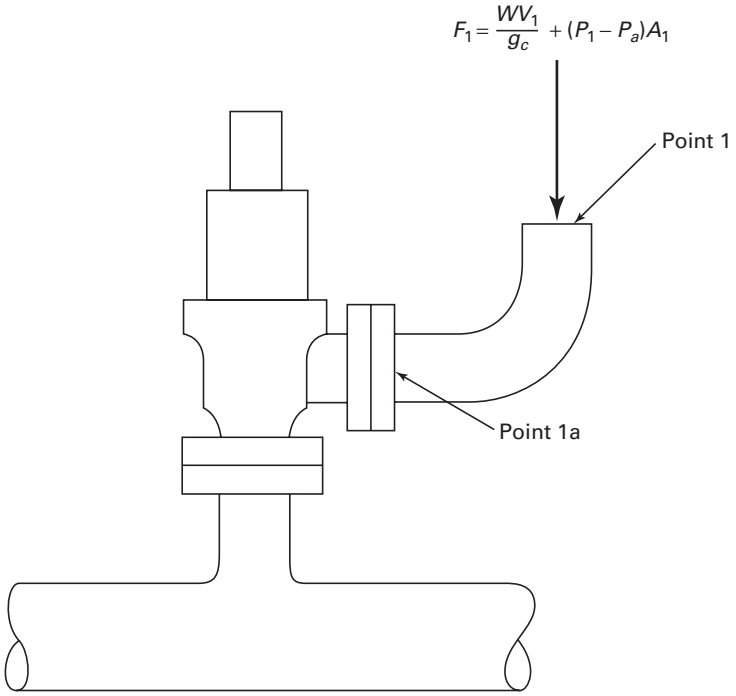

Fig. II-2-1

Table II-2.2.1

Steam Condition	*a*, Btu/lbm	*b*
Wet steam, < 90% quality	291	11
Saturated steam, ≥ 90% quality, 15 psia ≤ P_1 ≤ 1,000 psia	823	4.33
Superheated steam, ≥ 90% quality, 1,000 psia < P_1 ≤ 2,000 psia[1]	831	4.33

NOTE:
(1) This method may be used as an approximation for pressures > 2000 psi, but an alternate method should be used for verification.

and determine *P*/*P**.

(A.3.6) $P_{1a} = P_1$ (*P*/*P**)

(A.3.7) P_{1a} is the maximum operating pressure of the discharge elbow.

(B) Secondly, determine the design pressure and velocity for the vent pipe.

(B.1) Determine the pressure P_3 that exists at the vent pipe outlet (Fig. II-2-2).

$$P_3 = P_1 \left(\frac{A_1}{A_3} \right)$$

(B.2) Determine the velocity V_3 that exists at the vent pipe outlet (Fig. II-2-2).

$$V_3 = V_1$$

(B.3) Repeat Steps (3.1) to (3.7) in the calculation of the discharge elbow maximum operating pressure to determine the maximum operating pressure of the vent pipe.

(B.4) Determine the velocity V_2 and pressure P_2 that exists at the inlet to the vent pipe (Fig. II-2-2).

(B.4.1) Enter Chart II-1[2] with value of

$$f\left(\frac{L_{\text{max.}}}{D} \right)$$

from Step (3.4) and determine value of *V*/*V** and *P*/*P**.

(B.4.2) Calculate V_2

$$V_2 = V_3 \, (V/V^*)$$

(B.4.3) P_2, $P_2 = P_3$ (*P*/*P**). This is the highest pressure the vent stack will see and should be used in calculating vent pipe blow back (see para. II-2.3.1.2).

[2] Chart II-1 may be extended to other values of f ($L_{\text{max.}}/D$) by use of the Keenan and Kaye Gas Tables for Fanno lines. The Darcy-Weisbach friction factor is used in Chart II-1, whereas the Gas Tables use the Fanning factor which is one-fourth the value of the Darcy-Weisbach factor.

Copyright ASME International
Provided by IHS under license with ASME
No reproduction or networking permitted without license from IHS
Not for Resale

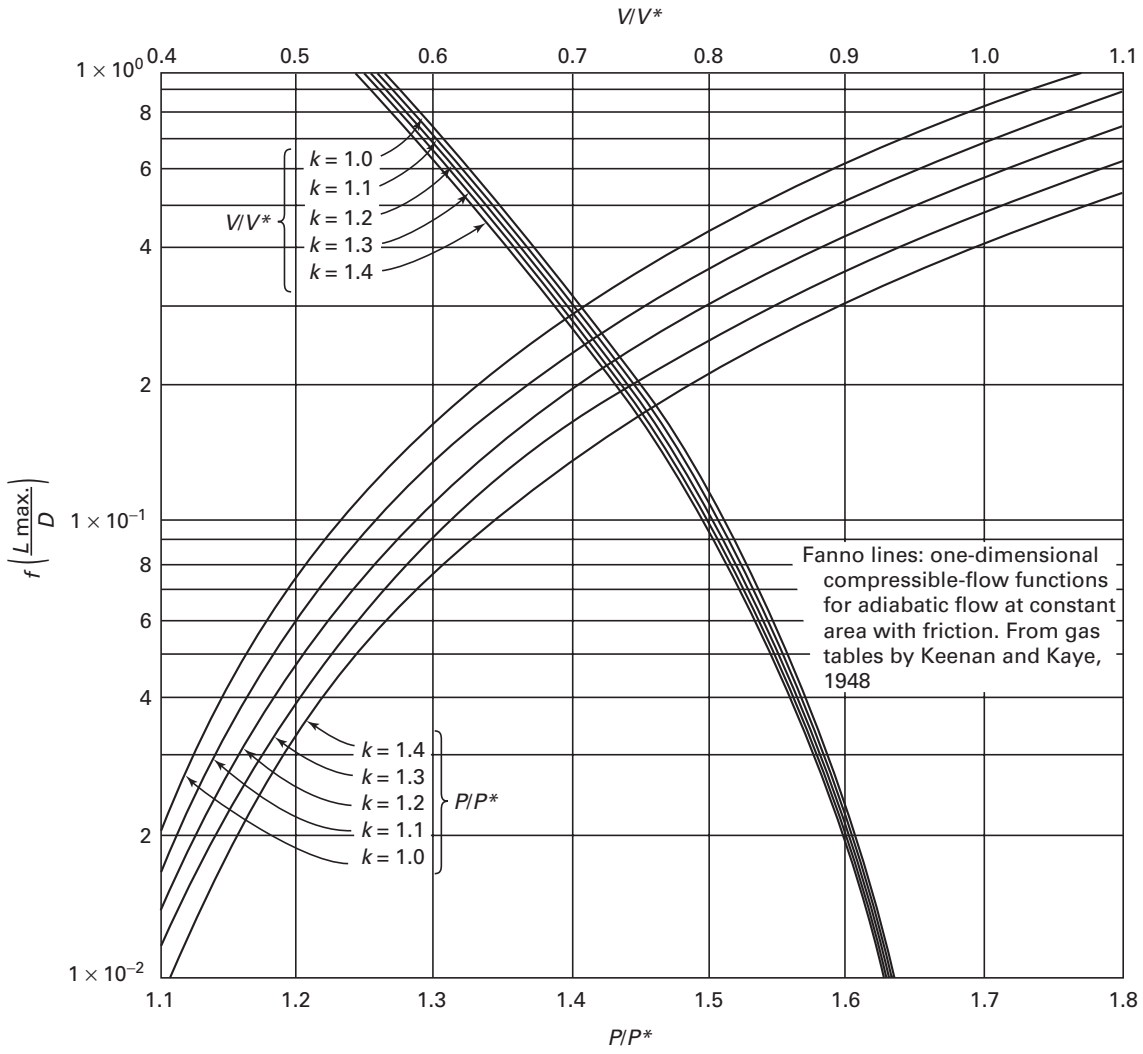

Chart II-1

II-2.2.2 Pressure for Closed Discharge Installations. The pressures in a closed discharge pipe during steady state flow may be determined by the methods described in para. II-2.2.1. However, when a safety valve discharge is connected to a relatively long run of pipe and is suddenly opened, there is a period of transient flow until the steady state discharge condition is reached. During this transient period, the pressure and flow will not be uniform. When the safety valve is initially opened, the discharge pipe may be filled with air. If the safety valve is on a steam system, the steam discharge from the valve must purge the air from the pipe before steady state steam flow is established and, as the pressure builds up at the valve outlet flange and waves start to travel down the discharge pipe, the pressure wave initially emanating from the valve will steepen as it propagates, and it may steepen into a shock wave before it reaches the exit. Because of this, it is recommended that the design pressure of the closed discharge pipe be greater than the steady state operating pressure by a factor of at least 2.

II-2.3 Reaction Forces From Valve Discharge

It is the responsibility of the piping system designer to determine the reaction forces associated with valve discharge. These forces can create bending moments at various points in the piping system so high as to cause catastrophic failure of the pressure boundary parts. Since the magnitude of the forces may differ substantially, depending on the type of discharge system, each system type is discussed in the paragraphs below.

II-2.3.1 Reaction Forces With Open Discharge Systems

II-2.3.1.1 Discharge Elbow. The reaction force F due to steady state flow following the opening of the safety

Copyright ASME International
Provided by IHS under license with ASME
No reproduction or networking permitted without license from IHS
Not for Resale

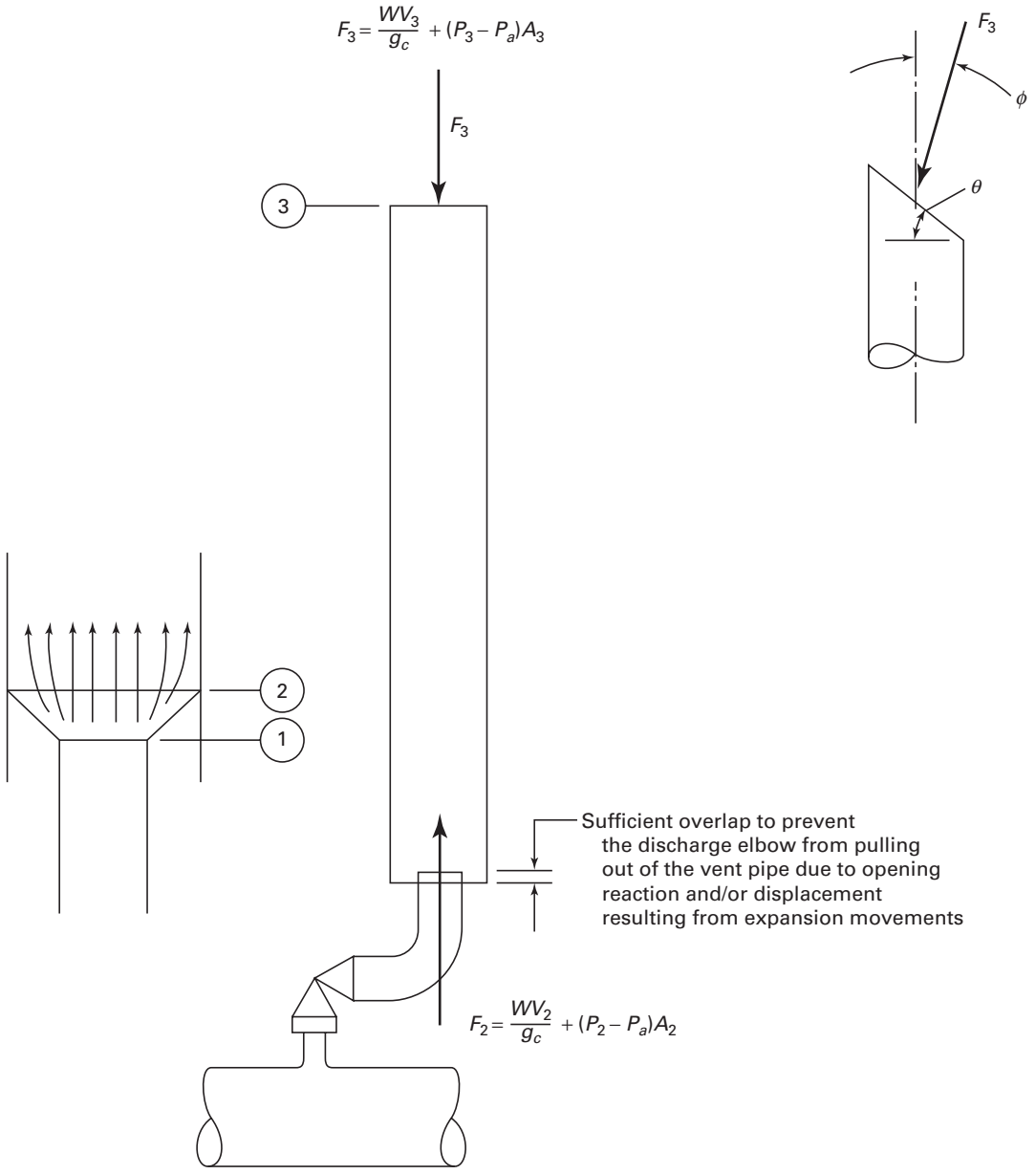

Fig. II-2-2

valve includes both momentum and pressure effects. The reaction force applied is shown in Fig. II-2-1, and may be computed by the following equation.

$$F_1 = \frac{W}{g_c} V_1 + (P_1 - P_a) A_1$$

where

F_1 = reaction force, lbf at Point 1
W = mass flow rate, (relieving capacity stamped on the valve × 1.11), lbm/sec
g_c = gravitational constant
= 32.2 lbm-ft/lbf-sec^2
V_1 = exit velocity at Point 1, ft/sec
P_1 = static pressure at Point 1, psia
A_1 = exit flow area at Point 1, in.^{2}
P_a = atmospheric pressure, psia

To ensure consideration of the effects of the suddenly applied load F, a dynamic load factor DLF should be applied (see para. II-3.5.1.3).

The methods for calculating the velocities and pressures at the exit point of the discharge elbow are the same as those discussed in para. II-2.2 of this Appendix.

II-2.3.1.2 Vent Pipe. Figure II-2-2 shows the external forces resulting from a safety valve discharge, which

Copyright ASME International
Provided by IHS under license with ASME
No reproduction or networking permitted without license from IHS
Not for Resale

act on the vent pipe. The methods for calculating F_2 and F_3 are the same as those previously described. The vent pipe anchor and restraint system must be capable of taking the moments caused by these two forces, and also be capable of sustaining the unbalanced forces in the vertical and horizontal directions.

A bevel of the vent pipe will result in a flow that is not vertical. The equations shown are based on vertical flow. To take account for the effect of a bevel at the exit, the exit force will act at an angle ϕ, with the axis of the vent pipe discharge which is a function of the bevel angle θ. The beveled top of the vent deflects the jet approximately 30 deg off the vertical for a 60 deg bevel, and this will introduce a horizontal component force on the vent pipe systems.

The terms in the equations shown on Fig. II-2-2 are the same as those defined in para. II-2.3.1 above.

The vent pipe must be sized so that no steam is blown back at the vent line entrance. The criteria which may be used as a guide to prevent this condition are listed below.

$$\frac{W\,(V_1 - V_2)}{g_c} > (P_2 - P_a)\,A_2 - (P_1 - P_a)A_1$$

P_a = standard atmospheric pressure, psia
W = mass flow rate, lbm/sec
V = velocity, ft/sec
P_1, P_2 = local absolute pressure, psia
A = area, in.^{2}
g_c = gravitational constant
= 32.2 lbm-ft/lbf-sec^2

The inequality states that the momentum at Point 1 has to be greater than the momentum at Point 2 in order that air is educted into the vent pipe. If the momentum at Point 1 equalled the momentum at Point 2, no air would be educted into the vent pipe. If the momentum at Point 1 was less than the momentum at Point 2, steam would "blow back" from the vent pipe.

The educting effect of the vent pipe is especially important for indoor installation of safety valves. The steam being vented from the upper body during safety valve operation will be removed from the area through the vent pipe. For that reason, the fluid momentum at 1 should exceed the fluid momentum at 2, not just be equal.

If this inequality is satisfied, "blow back" will not occur. The pressures and velocities are those calculated in para. II-2.2.1.

II-2.3.2 Reaction Forces With Closed Discharge Systems. When safety valves discharge a closed piping system, the forces acting on the piping system under steady state flow will be self-equilibrated, and do not create significant bending moments on the piping system. The large steady state force will act only at the point of discharge, and the magnitude of this force may be determined as described for open discharge systems.

Relief valves discharging into an enclosed piping system create momentary unbalanced forces which act on the piping system during the first few milliseconds following relief valve lift. The pressure waves traveling through the piping system following the rapid opening of the safety valve will cause bending moments in the safety valve discharge piping and throughout the remainder of the piping system. In such a case, the designer must compute the magnitude of the loads, and perform appropriate evaluation of their effects.

II-2.4 Other Mechanical Loads

Other design mechanical loads that must be considered by the piping designer include the following:

II-2.4.1 Interaction loads on the pipe run when more than one valve opens.

II-2.4.2 Loads due to earthquake and/or piping system vibration (see para. II-3.4).

II-3.0 BENDING MOMENT COMPUTATIONS

II-3.1 General

One of the most important considerations related to the mechanical design and analysis of safety valve installation is the identification and calculation of the moments at critical points in the installation. If the bending moments are not properly calculated, it will not be possible to meet the loading and stress criteria contained in ASME B31.1. As a minimum, the following loads, previously discussed in para. II-2.0 of this Appendix, should be considered in determining these moments:

(A) thermal expansion
(B) dead weight
(C) earthquake
(D) reaction force from valve discharge
(E) other mechanical loads

The analysis of the safety valve installation should include all critical sections, such as intersection points, elbows, transition sections, etc., and any related piping, vessels, and their supports which may interact with the safety valve installation. It is often most appropriate to model the safety valve installation and its related piping as a lumped mass system joined by straight or curved elements.

II-3.2 Thermal Expansion Analysis

There are many standard and acceptable methods for determination of moments due to thermal expansion of the piping installation. The thermal expansion analysis must comply with the requirements in para. 119. The safety valve installation often presents a special problem in that there may be a variety of operational modes to

Copyright ASME International
Provided by IHS under license with ASME
No reproduction or networking permitted without license from IHS
Not for Resale

consider where each mode represents a different combination of temperatures in various sections of the piping system. The design condition shall be selected so that none of the operational modes represents a condition that gives thermal expansion bending moments greater than the design condition.

The design of the safety valve installation should consider the differential thermal growth and expansion loads, as well as the local effects of reinforcing and supports. The design should also consider the differential thermal growth and expansion loads existing after any combination of safety valves (one valve to all valves) operates, raising the temperature of the discharge piping.

II-3.3 Dead Weight Analysis

The methods used for determination of bending moments due to dead weight in a safety valve installation are not different from the methods used in any other piping installation. If the support system meets the requirements in para. 121, the bending moments due to dead weight may be assumed to be $1500Z$ (in.-lb) where Z is the section modulus (in.^{3}) of the pipe or fitting being considered. However, bending moments due to dead weight are easily determined and should always be calculated in systems where stresses exceed 90% of the allowable stress limits in meeting the requirements of Eqs. (11) and (12) of para. 104.8.

II-3.4 Earthquake Analysis

Seismic loads must be known in order to calculate bending moments at critical points in the safety valve installation. If a design specification exists, it should stipulate if the piping system must be designed for earthquake. If so, it should specify the magnitude of the earthquake, the plant conditions under which the earthquake is assumed to occur, and the type earthquake analysis to be used (equivalent static or dynamic). If a design specification does not exist, it is the responsibility of the designer to determine what consideration must be given to earthquake analysis. It is beyond the scope of this Appendix to provide rules for calculating moments due to earthquake. The literature contains satisfactory references for determining moments by use of static seismic coefficients and how to perform more sophisticated dynamic analyses of the piping system using inputs in such form as time histories of displacement, velocity, and acceleration or response spectra where displacement, velocity, or acceleration is presented as a function of frequency.

Two types of seismic bending moments occur. One type is due to inertia effects and the other type is due to seismic motions of pipe anchors and other attachments. As will be shown later, the moments due to inertia effects must be considered in Eq. (12), para. 104.8, in the kS_h category. Moments due to seismic motions of the attachments may be combined with thermal expansion stress and considered in Eq. (13), para. 104.8 in the S_A category. For this reason, it may sometimes be justified for the designer to consider the moments separately; otherwise both sets of moments would have to be included in the kS_h category.

II-3.5 Analysis for Reaction Forces Due to Valve Discharge

II-3.5.1 Open Discharge Systems

II-3.5.1.1 The moments due to valve reaction forces may be calculated by simply multiplying the force, calculated as described in para. II-2.3.1.1, times the distance from the point in the piping system being analyzed, times a suitable dynamic load factor. In no case shall the reaction moment used in para. II-4.2 at the branch connection below the valve be taken at less than the product of

$$(DLF)\ (F_1)\ (D)$$

where

F_1 = force calculated per para. II-2.3.1.1
D = nominal O.D. of inlet pipe
DLF = dynamic load factor (see para. II-3.5.1.3)

Reaction force and resultant moment effects on the header, supports, and nozzles for each valve or combination of valves blowing shall be considered.

II-3.5.1.2 Multiple Valve Arrangements. Reaction force and moment effects on the run pipe, header, supports, vessel, and connecting nozzles for each valve blowing, and when appropriate, for combinations of valves blowing should be considered. In multiple valve arrangements, each valve will open at a different time, and since all valves may not be required to open during an overpressure transient, several possible combinations of forces can exist. It may be desirable to vary the direction of discharge of several safety valves on the same header to reduce the maximum possible forces when all valves are blowing.

II-3.5.1.3 Dynamic Amplification of Reaction Forces. In a piping system acted upon by time varying loads, the internal forces and moments are generally greater than those produced under static application of the load. This amplification is often expressed as the dynamic load factor *DLF* and is defined as the maximum ratio of the dynamic deflection at any time to the deflection which would have resulted from the static application of the load. For structures having essentially one degree-of-freedom and a single load application, the *DLF* value will range between one and two depending on the time-history of the applied load and the natural frequency of the structure. If the run pipe is rigidly supported, the safety valve installation can be idealized as a one degree-of-freedom system and the time-history of the applied loads can often be assumed to be a single ramp function

Copyright ASME International
Provided by IHS under license with ASME
No reproduction or networking permitted without license from IHS Not for Resale

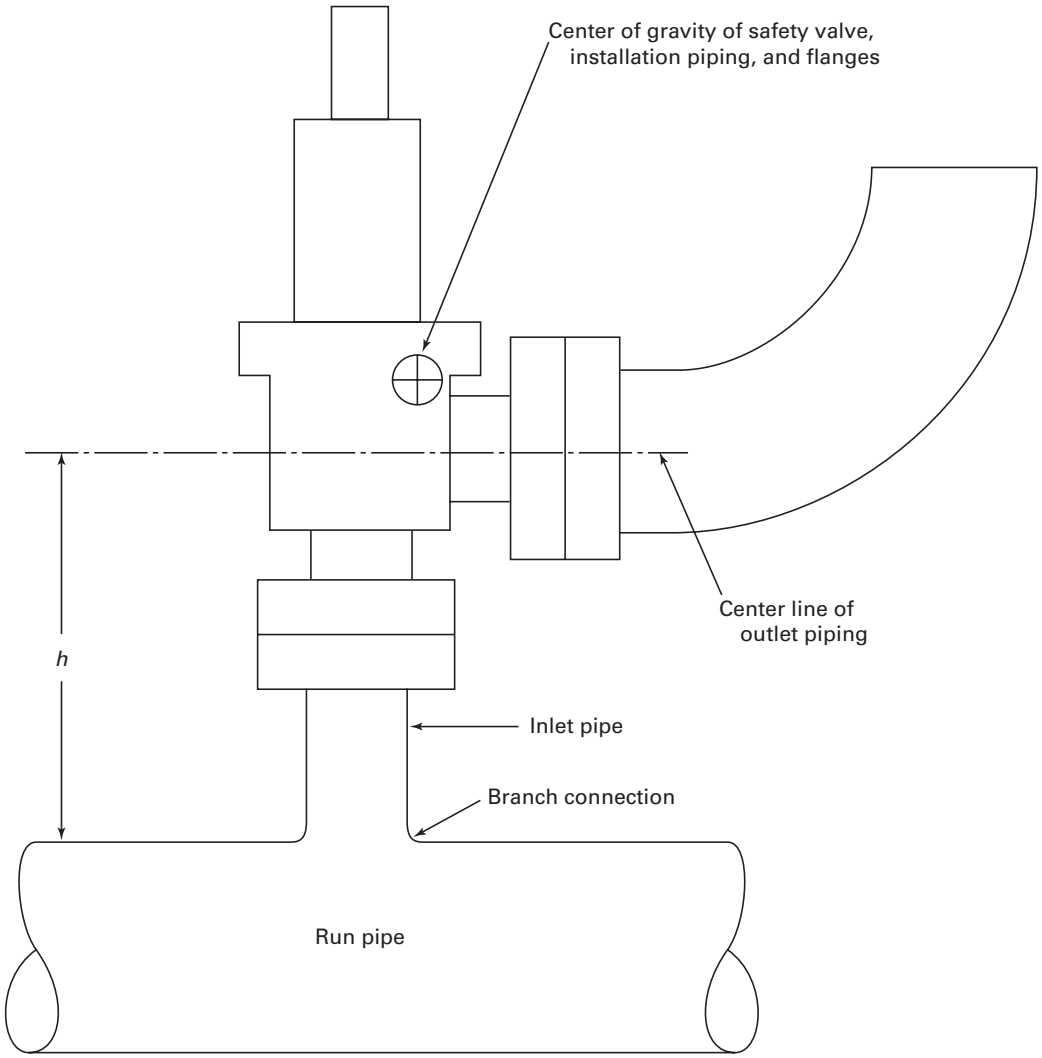

Fig. II-3-1 Safety Valve Installation (Open Discharge System)

between the no-load and steady state condition. In this case the *DLF* may be determined in the following manner.

(A) Calculate the safety valve installation period T using the following equation and Fig. II-3-1.

$$T = 0.1846 \sqrt{\frac{Wh^3}{EI}}$$

where

T = safety valve installation period, sec
W = weight of safety valve, installation piping, flanges, attachments, etc., lb
h = distance from run pipe to center line of outlet piping, in.
E = Young's modulus of inlet pipe, lb/in.^{2}, at design temperature
I = moment of inertia of inlet pipe, in.^{4}

(B) Calculate ratio of safety valve opening time to installation period (t_o/T) where t_o is the time the safety valve takes to go from fully closed to fully open, sec, and T is determined in (1) above.

(C) Enter Fig. II-3-2 with the ratio of safety valve opening time to installation period and read the *DLF* from the ordinate. The *DLF* shall never be taken less than 1.1.

If a less conservative *DLF* is used, the *DLF* shall be determined by calculation or test.

II-3.5.1.4 Valve Cycling. Often, safety valves are full lift, pop-type valves, and are essentially full-flow devices, with no capability for flow modulation. In actual pressure transients, the steam flow required to prevent overpressure is a varying quantity, from zero to the full rated capacity of the safety valves. As a result, the valves may be required to open and close a number of

Copyright ASME International
Provided by IHS under license with ASME
No reproduction or networking permitted without license from IHS
Not for Resale

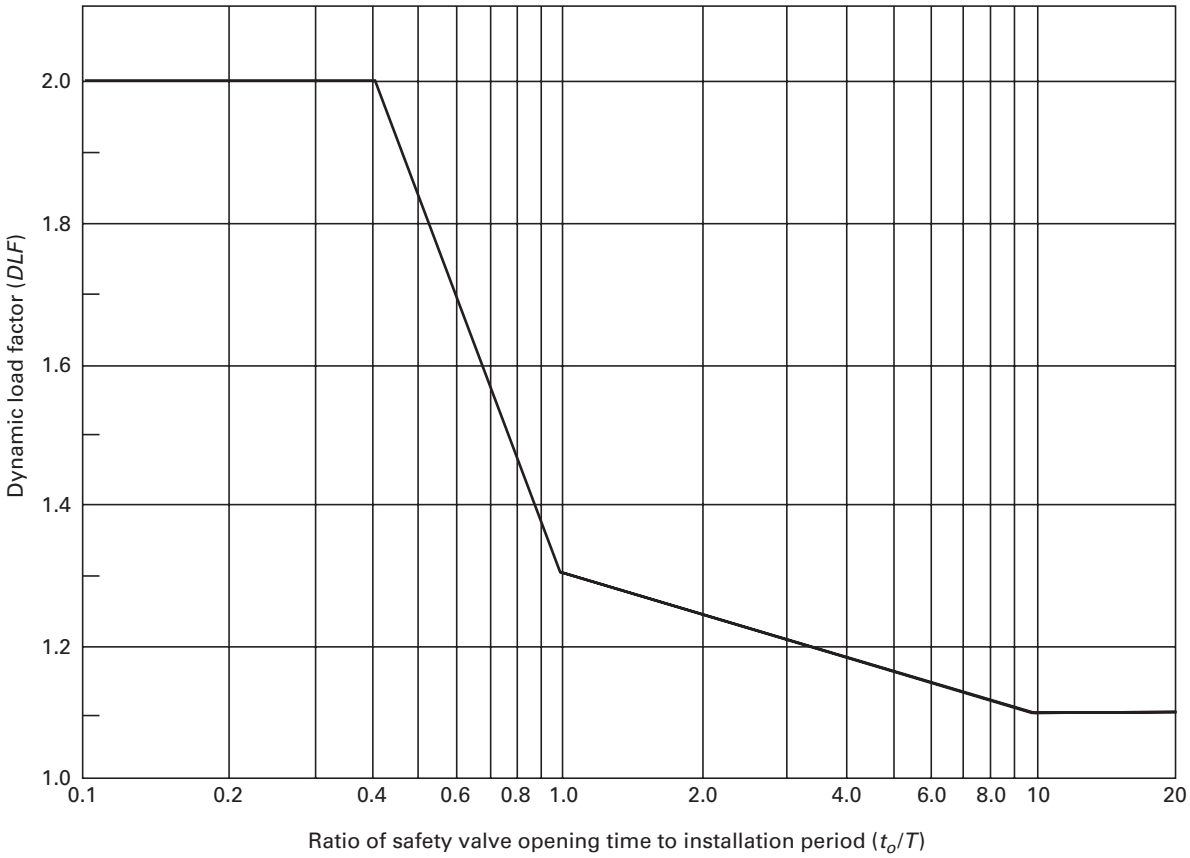

GENERAL NOTE: This figure is based on curves from *Introduction to Structural Dynamics*, J. M. Biggs, McGraw-Hill Book Co., 1964.

Fig. II-3-2 Dynamic Load Factors for Open Discharge System
This Figure Is Based on Curves From *Introduction to Structural Dynamics*, J. M. Biggs, McGraw-Hill Book Co., 1964

times during the transient. Since each opening and closing produces a reaction force, consideration should be given to the effects of multiple valve operations on the piping system, including supports.

II-3.5.1.5 Time-History Analysis. The reaction force effects are dynamic in nature. A time-history dynamic solution, incorporating a multidegree of freedom lumped mass model solved for the transient hydraulic forces is considered to be more accurate than the form of analysis presented in this Appendix.

II-3.5.2 Closed Discharge Systems. Closed discharge systems do not easily lend themselves to simplified analysis techniques. The discussions on pressure in para. II-2.2.2 and on forces in para. II-2.3.2 indicate that a time-history analysis of the piping system may be required to achieve realistic values of moments.

II-3.5.3 Water Seals. To reduce the problem of steam or gas leakage through the safety valve seats, the valve inlet piping may be shaped to form a water seal below each valve seat. If the valves are required to open to prevent overpressure, the water from the seal is discharged ahead of the steam as the valve disk lifts. The subsequent flow of water and steam through the discharge piping produces a significant pressure and momentum transient. Each straight run of discharge piping experiences a resulting force cycle as the water mass moves from one end of the run to the other.

For most plants which employ water seals, only the first cycle of each occurrence has a force transient based on water in the seal. The remaining cycles of each occurrence would be based on steam occupying the seal piping, and the transient forces would be reduced in magnitude.

II-4.0 LOADING CRITERIA AND STRESS COMPUTATION

II-4.1

All critical points in the safety valve installation shall meet the following loading criteria.

Copyright ASME International
Provided by IHS under license with ASME
No reproduction or networking permitted without license from IHS
Not for Resale

$$S_{lp} + S_{SL} \le S_h \quad (1)$$

$$S_{lp} + S_{SL} + S_{OL} \le kS_h \quad (2)$$

$$S_{lp} + S_{SL} + S_E \le S_A + S_h \quad (3)$$

where

S_{lp} = longitudinal pressure stress
S_{SL} = bending stresses due to sustained loads, such as dead weight
S_{OL} = bending stresses due to occasional loads, such as earthquake, reaction from safety valve discharge and impact loads
S_E = bending stresses due to thermal expansion

S_h, k, and S_A are as defined in ASME B31.1

The three loading criteria defined above are represented by Eqs. (11) and (12) in para. 104.8.

II-4.2 Stress Calculations

II-4.2.1 Pressure Stresses. The Code does not require determination of the pressure stresses that could cause failure of the pressure containing membrane. Instead, the Code provides rules to insure that sufficient wall thickness is provided to prevent failures due to pressure. It is not necessary to repeat these rules in this Appendix; however, some of the more important are listed below for reference.

(A) All pipe (plus other components) must satisfy the minimum required wall thickness of Eq. (3) of para. 104.1.2. In addition, wall thickness must be adequate to satisfy Eqs. (11) and (12) in para. 104.8. These two equations may govern determination of wall thickness in low pressure systems.

(B) No minimum wall thickness calculations are needed for components purchased to approved standards in Table 126.1.

(C) Pipe bends must meet the requirements of (1) above *after* bending.

(D) Branch connections which do not meet the requirements of (2) above must meet the area replacement requirements of para. 104.3.

II-4.2.2 Pressure Plus Bending Stresses. In order to guard against membrane failures (catastrophic), prevent fatigue (leak) failures, and to assure shakedown, the equations in para. 104.8 must be satisfied. These equations apply to all components in the safety valve installation and will not be repeated here. However, some additional explanation of these equations in regard to the very critical points upstream of the safety valve are in the paragraphs below.

II-4.2.2.1 Additive Stresses at Branch Connection. For purposes of Eqs. (11), (12), and (13) in para. 104.8 the section modulus and moments for application to branch connections, such as safety valve inlet pipes, are:

(A) For branch connections the Z should be the effective section modulus for the branch as defined in para. 104.8.

Thus,

$$Z = Z_b = \pi r_b^2 t_s \text{ (effective section modulus)}$$

where

r_b = mean branch cross-sectional radius, in.
t_s = lesser of t_r and it_b where
t_r = nominal thickness of run pipe
i = the branch connection stress intensification factor
t_b = nominal thickness of branch pipe

(B) Moment terms shall be defined as follows:

$$M_B = \sqrt{M_{x3}^2 + M_{y3}^2 + M_{z3}^2}$$

where M_B, M_{x3}, M_{y3}, and M_{z3} are defined in para. 104.8.

(C) Where the D_o/t_n of the branch connection differs from the D_o/t_n header or run, the larger of the two D_o/t_n values should be used in the first term of Eqs. (11) and (12) where D_o and t_n are defined in paras. 104.1 and 104.8, respectively.

II-4.2.2.2 Additive Stresses in Inlet Pipe. Equations (11), (12), and (13) in para. 104.8 may be applied to the inlet pipe in the same manner as described above for the branch connection, except that the values for D_o/t_n and Z should be for the inlet pipe and the stress intensification factor used will be different. It should be noted that the values D_o, t_n, and Z should be taken from a point on the inlet pipe such that D_o/t_n will have a maximum and Z a minimum value for the inlet pipe.

II-4.2.3 Analysis of Flange. It is important that the moments from the various loading conditions described in para. II-4.2.2 do not overload the flanges on the safety valve inlet and outlet. One method of doing this is to convert the moments into an equivalent pressure that is then added to the internal pressure. The sum of these two pressures P_{FD} would be acceptable if either of the following criteria are met:

(A) P_{FD} does not exceed the ASME B16.5 flange rating.

(B) S_H, S_R, and S_T should be less than the yield stress at design temperature, where S_H, S_R, and S_T are as defined in 2-7 of ASME Section VIII, Division 1 with these exceptions.

(B.1) P_{FD} should be used in the ASME Section VIII, Division 1 equations instead of the design pressure.

(B.2) S_H should include the longitudinal pressure stress at the flange hub.

II-4.2.4 Analysis of Valve. The allowable forces and moments which the piping system may place on the safety valves must be determined from the valve manufacturer. In some cases, the valve flanges are limiting rather than the valve body.

Copyright ASME International
Provided by IHS under license with ASME
No reproduction or networking permitted without license from IHS
Not for Resale

II-5.0 DESIGN CONSIDERATIONS

II-5.1 General

The design of safety valve installations shall be in accordance with para. 104 except that consideration be given to the rules provided in the following subparagraphs. These rules are particularly concerned with that portion of the piping system attached to and between the safety valve and the run pipe, header, or vessel which the valve services and includes the branch connection to the run pipe, header, or vessel.

II-5.2 Geometry

II-5.2.1 Locations of Safety Valve Installations. Safety valve installations should be located at least eight pipe diameters (based on I.D.) downstream from any bend in a high velocity steam line to help prevent sonic vibrations. This distance should be increased if the direction of the change of the steam flow is from vertical upwards to horizontal in such a manner as to increase density of the flow in the area directly beneath the station nozzles. Similarly, safety valve installation should not be located closer than eight pipe diameters (based on I.D.) either upstream or downstream from fittings.

II-5.2.2 Spacing of Safety Valve Installation. Spacing of safety valve installations must meet the requirements in Note (6)(c), Appendix D, Table D-1.

II-5.3 Types of Valves and Installations

II-5.3.1 Installations With Single Outlet Valves. Locate unsupported valves as close to the run pipe or header as is physically possible to minimize reaction moment effects.

Orientation of valve outlet should preferably be parallel to the longitudinal axis of the run pipe or header.

Angular discharge elbows oriented to minimize the reaction force moment shall have a straight pipe of at least one pipe diameter provided on the end of the elbow to assure that the reaction force is developed at the desired angle. Cut the discharge pipe square with the centerline. Fabrication tolerances, realistic field erection tolerances, and reaction force angle tolerances must be considered when evaluating the magnitude of the reaction moment.

The length of unsupported discharge piping between the valve outlet and the first outlet elbow [Fig. II-1-2(A), distance l] should be as short as practical to minimize reaction moment effects.

II-5.3.2 Installations With Double Outlet Valves. Double outlet valves with symmetrical tail-pipes and vent stacks will eliminate the bending moment in the nozzle and the run pipe or header providing there is equal and steady flow from each outlet. If equal flow cannot be guaranteed, the bending moment due to the unbalanced flow must be considered. Thrust loads must also be considered.

II-5.3.3 Multiple Installations. The effects of the discharge of multiple safety valves on the same header shall be such as to tend to balance one another for all modes of operation.

II-5.4 Installation Branch Connections

Standard branch connections shall as a minimum meet the requirements of para. 104.3. It should be noted that branch connections on headers frequently do not have sufficient reinforcement when used as a connection for a safety valve. It may be necessary to provide additional reinforcing (weld deposit buildup) or special headers that will satisfactorily withstand the reaction moments applied.

Material used for the branch connection and its reinforcement shall be the same or of higher strength than that of the run pipe or header.

It is strongly recommended that branch connections intersect the run pipe or header normal to the surface of the run pipe or header at $\alpha = 90$ deg, where α is defined as the angle between the longitudinal axis of the branch connection and the normal surface of the run pipe or header. Branch connections that intersect the run pipe or headers at angles,

$$90 \text{ deg} > \alpha \geq 45 \text{ deg}$$

should be avoided. Branch connections should not in any case intersect the run pipe or header at angles,

$$\alpha < 45 \text{ deg}$$

II-5.5 Water in Installation Piping

II-5.5.1 Drainage of Discharge Piping. Drains shall be provided so that condensed leakage, rain, or other water sources will not collect on the discharge side of the valve and adversely affect the reaction force. Safety valves are generally provided with drain plugs that can be used for a drain connection. Discharge piping shall be sloped and provided with adequate drains if low points are unavoidable in the layout.

II-5.5.2 Water Seals. Where water seals are used ahead of the safety valve, the total water volume in the seals shall be minimized. To minimize forces due to slug flow or water seal excursion, the number of changes of direction and the lengths of straight runs of installation piping shall be limited. The use of short radius elbows is also discouraged; the pressure differential across the cross section is a function of the elbow radius.

II-5.6 Discharge Stacks

If telescopic or uncoupled discharge stacks, or equivalent arrangements, are used then care should be taken to insure that forces on the stack are not transmitted to the valve discharge elbow. Stack clearances shall be

Copyright ASME International
Provided by IHS under license with ASME
No reproduction or networking permitted without license from IHS Not for Resale

checked for interference from thermal expansion, earthquake displacements, etc. Discharge stacks shall be supported adequately for the forces resulting from valve discharge so that the stack is not deflected, allowing steam to escape in the vicinity of the valve. In addition, the deflection of the safety valve discharge nozzle (elbow) and the associated piping system when subjected to the reaction force of the blowing valve shall be calculated. This deflection shall be considered in the design of the discharge stacks slip-joint to assure that the discharge nozzle remains in the stack, preventing steam from escaping in the vicinity of the valve.

To prevent blowback of discharging steam from inlet end of vent stack, consider the use of an antiblowback device that still permits thermal movements of header.

II-5.7 Support Design

Supports provided for safety valves and the associated piping require analysis to determine their role in restraint as well as support. These analyses shall consider at least the following effects:

(A) differential thermal expansion of the associated piping, headers, and vessels.

(B) Dynamic response characteristics of the support in relation to the equipment being supported and the structure to which it is attached, during seismic events and valve operation. Maximum relative motions of various portions of the building and structures to which supports are attached resulting from seismic excitation must be considered in selecting, locating, and analyzing support systems.

(C) Capability of the support to provide or not provide torsional rigidity, per the support design requirements.

II-5.7.1 Pipe Supports. Where necessary, it is recommended that the support near the valve discharge be connected to the run pipe, header, or vessel rather than to adjacent structures in order to minimize differential thermal expansion and seismic interactions.

Each straight leg of discharge piping should have a support to take the force along that leg. If the support is not on the leg itself, it should be as near as possible on an adjacent leg.

When a large portion of the system lies in a plane, the piping if possible should be supported normal to that plane even though static calculations do not identify a direct force requiring restraint in that direction. Dynamic analyses of these systems have shown that out-of-plane motions can occur.

II-5.7.2 Snubbers. Snubbers are often used to provide a support or a stop against a rapidly applied load, such as the reaction force of a blowing valve or the pressure-momentum transient in a closed piping system. Since snubbers generally displace a small distance before becoming rigid, the displacement must be considered in the analysis. In addition, if the load is applied to the snubber for a relatively long time, the snubber performance characteristics shall be reviewed to assure that the snubber will not permit motion during the time period of interest, or the additional displacement must be considered in the analysis. The snubber performance shall also be reviewed for response to repetitive load applications caused by the safety valve cycling open and closed several times during a pressure transient.

II-5.8 Silencer Installation

Silencers are occasionally installed on safety valve discharges to dissipate the noise generated by the sonic velocity attained by the fluid flowing through the valve.

Silencers must be properly sized to avoid excessive backpressure on the safety valve causing improper valve action or reducing relieving capacity.

Safety valve discharge piping, silencers, and vent stacks shall be properly supported to avoid excessive loading on the valve discharge flange.

II-6.0 SAMPLE DESIGNS

Examples of various safety valve installations that a designer may encounter in practice are presented in Figs. II-1-2(A) and II-6-1.

II-7.0 SAMPLE PROBLEM (SEE FIGS. II-7-1 AND II-7-2)

II-7.1 Procedure

(A) Determine pressure and velocity at discharge elbow exit.

(B) Calculate maximum operating pressure for discharge exit.

(C) Calculate reaction force at discharge elbow exit.

(D) Calculate bending moments of Points (1) and (2) from reaction force and seismic motion.

(E) Determine stress intensification factors at Points (1) and (2).

(F) Calculate predicted stresses at Points (1) and (2) and compare with allowable stress.

(G) Calculate maximum operating pressure for vent pipe.

(H) Check for blowback.

(I) Calculate forces and moments on vent pipe.

II-7.1.1 Pressure and Velocity at Discharge Elbow Exit (Para. II-2.2.1)

$$P_1 = \frac{W}{A_1}\frac{(b-1)}{b}\sqrt{\frac{2(h_o - a)J}{g_c(2b-1)}}$$

$$V_1 = \sqrt{\frac{2g_c\,J(h_o - a)}{(2b-1)}}$$

Copyright ASME International
Provided by IHS under license with ASME
No reproduction or networking permitted without license from IHS
Not for Resale

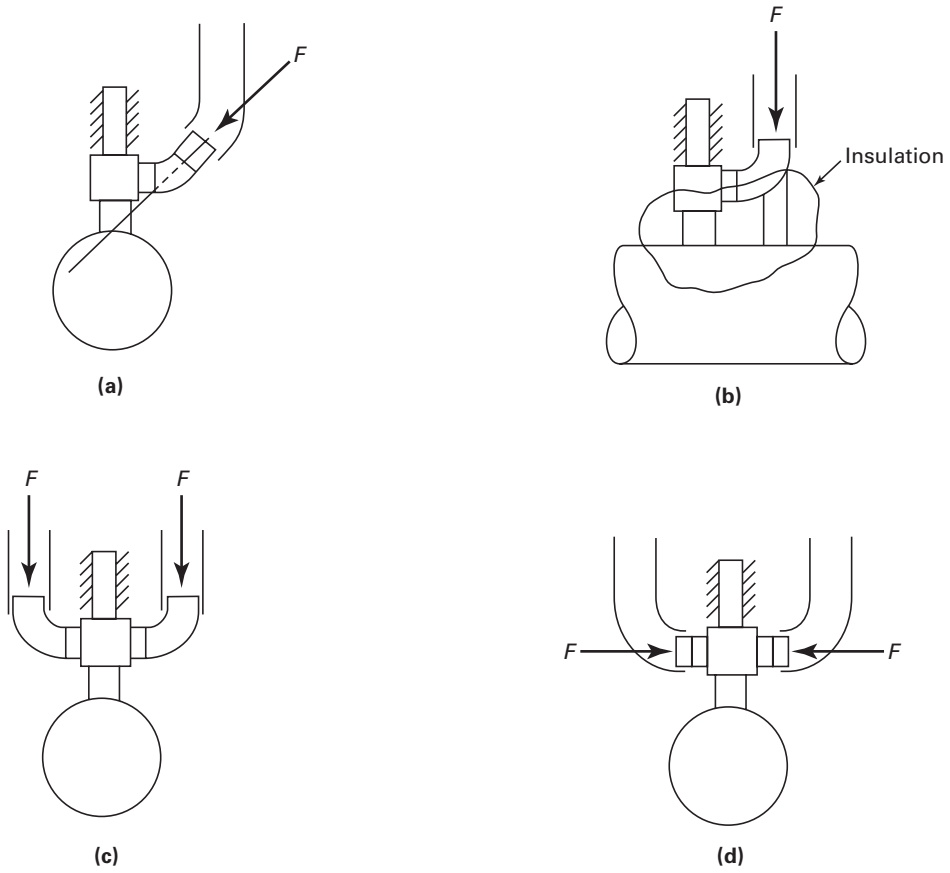

Fig. II-6-1

W = flow rate
= 116.38 lbm/sec
A_1 = 50.03 in.^{2}
h_o = stagnation enthalpy for steam at 925 psia, 1,000°F
= 1507.3 Btu/lbm
a = 823 Btu/lbm for $15 \le P_1 \le 1{,}000$ psia and $h_o \le$ 1,600 Btu/lbm
b = 4.33 for $15 \le P_1 \le 1{,}000$ psia and $h_o \le$ 1,600 Btu/lbm
J = 778 ft-lbf/Btu
g_c = 32.2 lbm-ft/lbf-sec^2
P_1 = 118 psia
V_1 = 2,116 ft/sec

II-7.1.2 Discharge Elbow Maximum Operating Pressure

L/D for 8 in. Class 150 ASME weld neck flange

$$= \frac{4 \text{ in.}}{7.981 \text{ in.}} = 0.5$$

L/D for 8 in. SCH 40 short radius elbow

L/D for 12 in. of 8 in. SCH 40 pipe = 30

$$= \frac{12 \text{ in.}}{7.981 \text{ in.}} = 1.5$$

$$\Sigma \left(\frac{L}{D}\right) = \left(\frac{L_{\max.}}{D}\right) = 32.0$$

$$f = 0.013$$

$$k = 1.3$$

$$f\left(\frac{L_{\max}}{D}\right) = 0.416$$

From Chart II-1, $P/P^* = 1.647$.

$$P_{1a} = P_1 (P/P^*) = 194 \text{ psia}$$

II-7.1.3 Reaction Force at Discharge Elbow Exit. Reaction force,

Copyright ASME International
Provided by IHS under license with ASME
No reproduction or networking permitted without license from IHS
Not for Resale

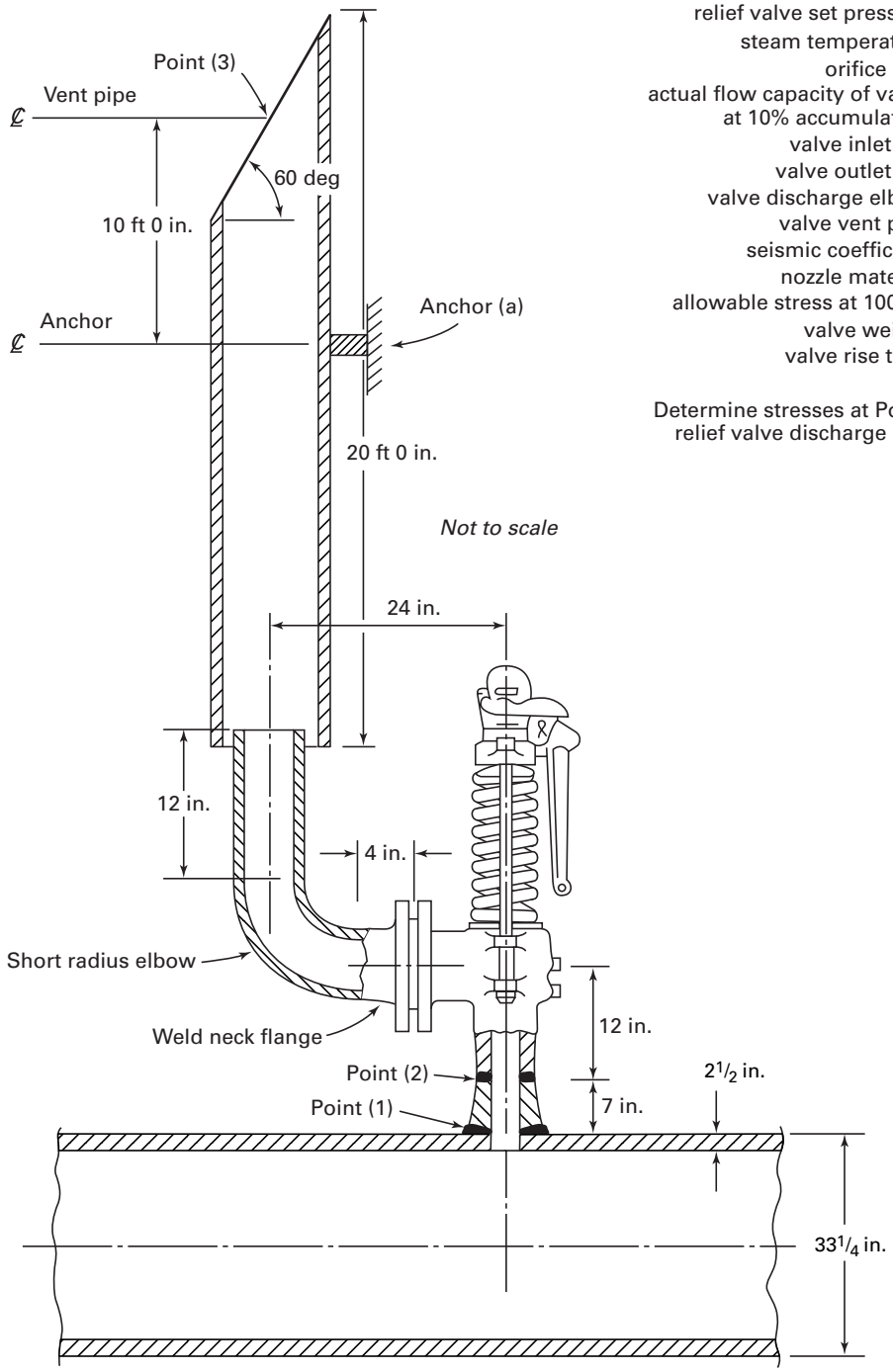

relief valve set pressure = 910 psig
steam temperature = 1000°F
orifice size = 11.05 in.^{2} (Q orifice)
actual flow capacity of valve at 10% accumulation = 418,950 lbm/hr
valve inlet I.D. = 6 in.
valve outlet I.D. = 8 in.
valve discharge elbow = 8 in. SCH 40
valve vent pipe = 12 in. SCH 30
seismic coefficient = 1.5*g*
nozzle material = ASTM A 335 P22 2 1/4Cr–1Mo
allowable stress at 1000°F = 7800 psi
valve weight = 800 lb
valve rise time = 0.040 sec

Determine stresses at Points (1) and (2) due to seismic and relief valve discharge loads only.

Fig. II-7-1

$$F_1 = \frac{WV_1}{g_c} + (P_1 - P_a)\,A_1$$

W = 116.38 lbm/sec
V_1 = 2,116 ft/sec
g_c = 32.2 lbm-ft/lbf-sec^2
P_1 = 118 psia
A_1 = 50.03 in.^{2}

P_a = 15 psia
$(P_1 - P_a)$ = 118 – 15
= 103 psig
WV_1/g_c = 7,648 lbf
$(P_1 - P_a)\,A_1$ = 5,153 lbf
F_1 = 12,801 lbf

Copyright ASME International
Provided by IHS under license with ASME
No reproduction or networking permitted without license from IHS
Not for Resale

$$i = 1.5 \left(\frac{R_m}{T_r}\right)^{2/3} \left(\frac{r'_m}{R_m}\right)^{1/2} \left(\frac{T'_b}{T_r}\right)\left(\frac{r'_m}{r_p}\right)$$

R_m, T_r, r'_m, T'_b, and r_p are shown in sketch below:

$$i_{(1)} = 1.5 \left(\frac{15.375}{2.5}\right)^{2/3} \left(\frac{4.25}{15.375}\right)^{1/2} \left(\frac{2.5}{2.5}\right)\left(\frac{4.25}{5.5}\right)$$

$$i_{(1)} = 2.05$$

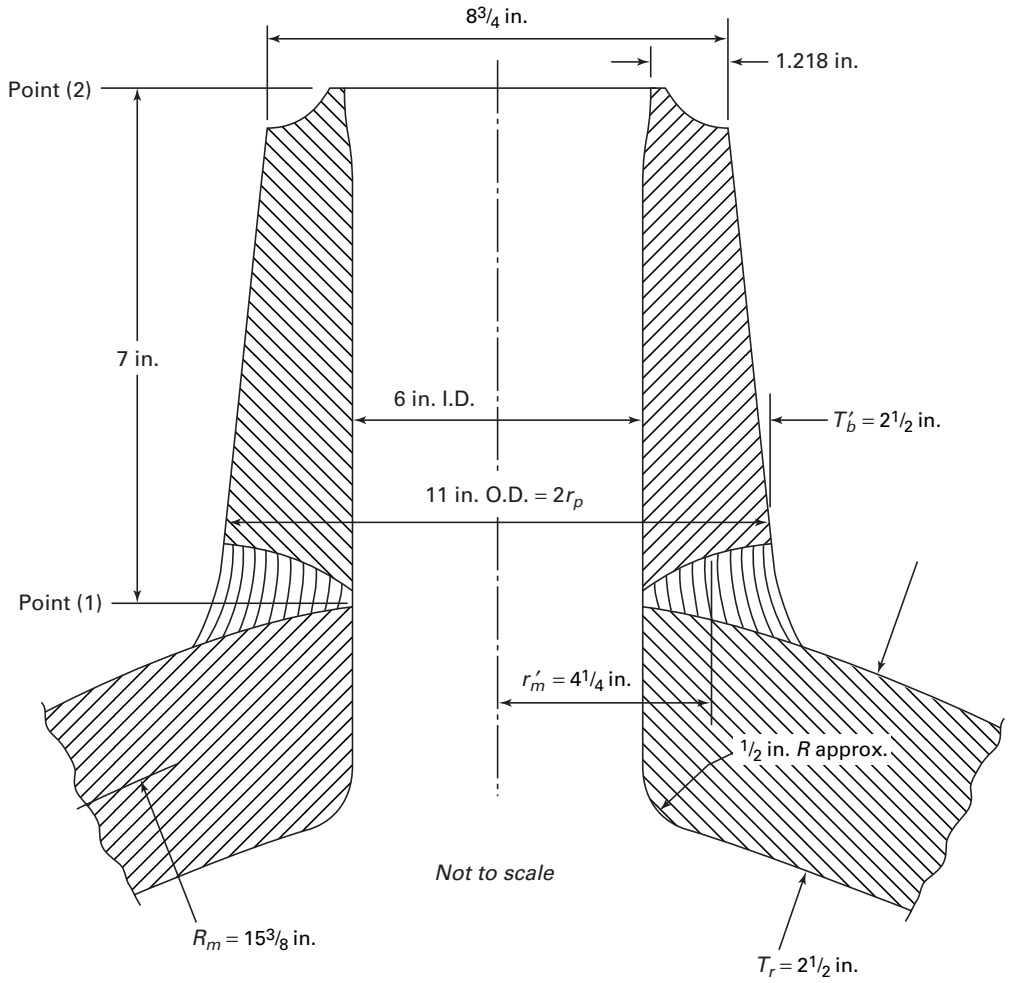

Fig. II-7-2

II-7.1.4 Bending Moments at Points (1) and (2)

(A) Bending Moment at Points (1) and (2) due to Reaction at Point (1):

$M_{1(1)} = M_{1(2)}$
$= F_1 \times L \times DLF$
L = moment arm
= 24 in.
DLF = dynamic load factor

To determine *DLF,* first determine the safety valve installation period *T:*

$$T = 0.1846 \sqrt{\frac{Wh^3}{EI}}$$

where
W = weight of valve
= 800 lb

Copyright ASME International
Provided by IHS under license with ASME
No reproduction or networking permitted without license from IHS
Not for Resale

h = distance from run pipe to center line of outlet piping
= 19 in.
E = Young's modulus of inlet pipe at design temperature
= 23×10^6 psi
I = moment of inertia of inlet pipe
= $\frac{\pi}{64}(D_o^4 - D_i^4)$

Use average O.D. and I.D. to determine I.
D_o = 9.875 in. avg.; D_i = 6 in. avg.
= 403.2 in.^{4}
T = 0.00449 sec

For a valve rise time of 0.040 sec = t_o, the ratio t_o/T is 8.9. From Fig. II-3-2, DLF = 1.11.

Using F_1 = 12,801 lbf, L = 24 in., and DLF = 1.11.

$$M_{1(1)} = M_{1(2)} = 341{,}018 \text{ in.-lb}$$

(B) Bending Moments at Points (1) and (2) due to Seismic Loading

Seismic force,

$$F_S = \text{mass} \times \text{acceleration}$$

$$= \left[\frac{800 \text{ lbm}}{32.2 \text{ lbm-ft/lbf-sec}^2}\right] \times 1.5(32.2 \text{ ft/sec}^2)$$

$$= 1{,}200 \text{ lbf}$$

Moment arm for Point (1) = 19 in.

$$M_{S(1)} = 1200 \text{ lbf (19 in.)} = 22{,}800 \text{ in.-lb}$$

Moment arm for Point (2) = 12 in.

$$M_{S(2)} = 1200 \text{ lbf (12 in.)} = 14{,}400 \text{ in.-lb}$$

(C) Combined Bending Moments at Points (1) and (2)

$$M_{(1)} = M_{1(1)} + M_{S(1)} = 363{,}819 \text{ in.-lb}$$

$$M_{(2)} = M_{1(2)} + M_{S(2)} = 355{,}419 \text{ in.-lb}$$

II-7.1.5 Stress Intensification Factors at Points (1) and (2)

(A) At Point (1), Branch Connection

$$i_{(1)} = 2.05$$

(B) Stress Intensification Factors at Point (2), Butt weld

$$i_{(2)} = 1.0$$

II-7.1.6 Predicted Stresses at Points (1) and (2)

(A) Predicted Stresses at Point (1), Branch Connection

$$\text{Predicted stress} = \frac{PD_o}{4t_n}$$

$$\frac{D_o}{t_n} \text{ for run pipe} = \frac{33.25 \text{ in.}}{2.5 \text{ in.}} = 13.3$$

$$\frac{D_o}{t_n} \text{ for branch pipe} = \frac{11 \text{ in.}}{2.5 \text{ in.}} = 4.4$$

Use larger value with P = 910 psig.

$$\text{Pressure stress}_{(1)} = 3{,}030 \text{ psi}$$

$$\text{Flexure stress}_{(1)} = \frac{0.75i\, M_{(1)}}{Z_{(1)}}$$

$$Z_{(1)} = \pi r_b^2\, t_s$$

t_S = lesser of t_r or $(i)\, t_b$

t_R = 2.5 in.; $(i)\, t_b$ = (2.05) 2.5 in.

t_S = 2.5 in.

r_b = 4.25 in.

$Z_{(1)}$ = 142 in.^{3}

$i_{(1)}$ = 2.05; $M_{(1)}$ = 363,819 in.-lb

$$\text{Flexure stress}_{(1)} = 3{,}939 \text{ psi}$$

$$\text{Combined stress}_{(1)} = \text{pressure stress}_{(1)} + \text{flexure stress}_{(1)} = 6{,}969 \text{ psi}$$

(B) Predicted Stresses at Point (2), Butt weld

$$\text{Pressure stress} = \frac{P\, D_o}{4\, t_n}$$

P = 910 psig

D_o = 8.75 in.

t_n = 1.218 in.

$$\text{Pressure stress}_{(2)} = 1{,}635 \text{ psi}$$

$$\text{Flexure stress}_{(2)} = \frac{0.75\, i\, M_{(2)}}{Z_{(2)}}$$

$$Z_{(2)} = \frac{\pi}{32}\,\frac{D_o^4 - D_i^4}{D_o}$$

D_o = 8.75 in.

D_i = 6 in.

$Z_{(2)}$ = 51.1 in.^{3}

$i_{(2)}$ = 1.0

Copyright ASME International
Provided by IHS under license with ASME
No reproduction or networking permitted without license from IHS
Not for Resale

$$M_{(2)} = 355{,}419 \text{ in.-lb}$$

$$\text{Flexure stress}_{(2)} = 6{,}955 \text{ psi}$$

(Note that $0.75i$ is set equal to 1.0 whenever $0.75i$ is less than 1.0, as in this case.)

$$\begin{aligned}\text{Combined stress}_{(2)} &= \text{pressure stress}_{(2)} \\ &\quad + \text{flexure stress}_{(2)} \\ &= 8{,}590 \text{ psi}\end{aligned}$$

(C) Comparison of Predicted Stress with Allowable Stress. Allowable stress of nozzle material at 1,000°F is

$$S_h = 7{,}800 \text{ psi}$$
$$k = 1.2$$

$$kS_h = 9{,}360 \text{ psi}$$

$$\text{Combined stress}_{(1)} = 6{,}969 \text{ psi}$$

$$\text{Combined stress}_{(2)} = 8{,}590 \text{ psi}$$

II-7.1.7 Calculate the Maximum Operating Pressure for Vent Pipe

$$P_3 = P_1\left(\frac{A_1}{A_3}\right) = 118 \text{ psia}\left(\frac{50.03 \text{ in.}^2}{114.80 \text{ in.}^2}\right)$$

$$= 51.4 \text{ psia}$$

L/D for 20 ft 0 in. of 12 in. SCH 30 pipe = 19.85.

$$\Sigma(L/D) = \left(\frac{L_{\max.}}{D}\right) = 19.85$$

$$f = 0.013$$

$$k = 1.3$$

$$f\left(\frac{L_{\max.}}{D}\right) = 0.258$$

From Chart II-1, $P/P^* = 1.506$.

$$P_2 = P_3\,(P/P^*) = 77.4 \text{ psia}$$

II-7.1.8 Check for Blowback From Vent Pipe. Calculate the velocity V_2 that exists at the inlet to the vent pipe (para. II-2.2.1.4).

$$f\left(\frac{L_{\max}}{D}\right) = 0.258 \text{ from Step (7)}$$

$$V_3 = V_1 = 2{,}116 \text{ ft/sec}$$

From Chart II-1, $V/V^* = 0.7120$.

$$V_2 = V_3\,(V/V^*) = 1{,}507 \text{ ft/sec}$$

Check the inequality from para. II-2.3.1.2.

$$\frac{W\,(V_1 - V_2)}{g_c} > (P_2 - P_a)\,A_2 - (P_1 - P_a)\,A_1$$

$$\frac{116.38\,(2116 - 1507)}{32.2} > (77.4 - 14.7)(114.8) - (118 - 14.7)(50.03)$$

$$2{,}201 > 2{,}030$$

The inequality has been satisfied but the designer may require a design margin that would make 14 in. SCH 30 more acceptable. If a larger vent pipe is chosen, then the vent pipe analysis would have to be repeated for the 14 in. SCH 30 pipe.

II-7.1.9 Calculate Forces and Moments on Vent Pipe Anchor

(a)

$$\begin{aligned}F_2 &= \frac{WV_2}{g_c} + (P_2 - P_a)\,A_2 \\ &= \frac{(116.38)(1507)}{32.2} \\ &\quad + (77.4 - 14.7)\,(114.8) \\ &= 5{,}447 + 7{,}198.0 = 12{,}645 \text{ lbf}\end{aligned}$$

$$\begin{aligned}F_3 &= \frac{(116.38)(2{,}116)}{32.2} \\ &\quad + (51.4 - 14.7)(114.8) \\ &= 7{,}648 + 4{,}213 = 11{,}861 \text{ lbf}\end{aligned}$$

Assume a 30 deg jet deflection angle for vent pipe outlet. Vertical component of F_3

$$F_{3V} = F_3 \cos 30 \text{ deg} = 10{,}272 \text{ lbf}$$

Horizontal component of F_3

$$F_{3H} = F_3 \sin 30 \text{ deg} = 5{,}931 \text{ lbf}$$

Net imbalance on the vent pipe in the vertical direction is

$$F_2 - F_{3V} = 2373 \text{ lbf}$$

Moment on vent pipe anchor

$$\begin{aligned}\Sigma M &= (F_2 - F_{3V})\,\frac{D_o}{2} \\ &\quad + F_{3H} \times [\text{distance from (a) to point 3}] \\ &= (2373)\left(\frac{1.06}{2}\right) + (5931)(10.0)\end{aligned}$$

Copyright ASME International
Provided by IHS under license with ASME
No reproduction or networking permitted without license from IHS
Not for Resale

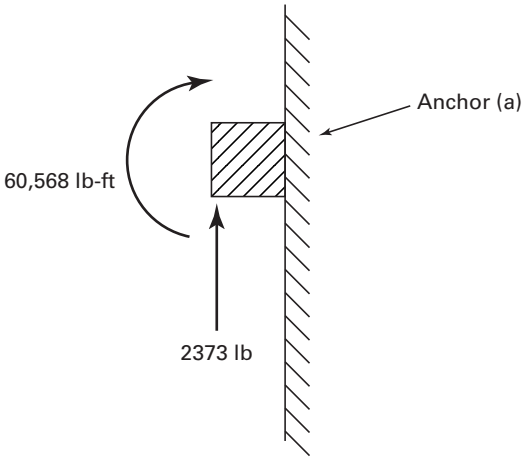

Fig. II-7-3

= 60,568 ft-lb

The vent pipe anchor would then be designed for the loads shown in Fig. II-7-3 for safety valve operation.

Conclusion

Branch connection stresses at Points (1) and (2) due to seismic and relief valve discharge are within 1.2 S_h. Blowback will not occur with the 12 in. standard weight vent pipe. The vent pipe anchor loads have been identified.

Copyright ASME International
Provided by IHS under license with ASME
No reproduction or networking permitted without license from IHS
Not for Resale

NONMANDATORY APPENDIX III
RULES FOR NONMETALLIC PIPING AND PIPING LINED WITH NONMETALS[1]

FOREWORD

ASME B31.1 contains rules governing the design, fabrication, materials, erection, and examination of power piping systems. Experience in the application of nonmetallic materials for piping systems has shown that a number of considerations exist for the use of these materials that are not addressed in the current body of the Code. In order to address these, the requirements and recommendations for the use of nonmetallic piping (except in paras. 105.3, 108.4, 116, and 118) have been separately assembled in this nonmandatory Appendix.

III-1.0 SCOPE AND DEFINITION

III-1.1 General

III-1.1.1 This Appendix provides minimum requirements for the design, materials, fabrication, erection, testing, examination, and inspection of nonmetallic piping and metallic piping lined with nonmetals within the jurisdiction of the ASME B31.1 Power Piping Code. All references to the Code or to Code paragraphs in this Appendix are to the Section B31.1 Power Piping Code. In this Appendix, nonmetallic piping shall be limited to plastic and elastomer based piping materials, with or without fabric or fibrous material added for pressure reinforcement. Metallic piping lined with nonmetals shall be limited to factory-made plastic-lined ferrous metal pipe, fittings, and flanges produced to one of the product standards for plastic-lined piping materials listed in Table III-4.1.1.

III-1.1.2 Standards and specifications incorporated in this Appendix are listed in Table III-4.1.1. The effective date of these documents shall correspond to the date of this Appendix.

III-1.1.3 The provisions in Chapters I through VI and in Appendices A through F are requirements of this Appendix only when specifically referenced herein.

III-1.2 Scope

III-1.2.1 All applicable requirements of para. 100.1 and the limitations of para. 105.3 shall be met in addition to those in this Appendix.

[1] Nonmandatory Appendices are identified by a Roman numeral; mandatory Appendices are identified by a letter. Therefore, Roman numeral I is not used in order to avoid confusion with the letter I.

III-1.2.2 Use of this Appendix is limited to

(A) water service.

(B) nonflammable and nontoxic liquid, dry material, and slurry systems.

(C) reinforced thermosetting resin pipe in buried flammable and combustible liquid service systems [refer to para. 122.7.3(F)].

(D) polyethylene pipe in buried flammable and combustible liquid and gas service. Refer to paras. 122.7.3(F) and 122.8.1(G).

(E) metallic piping lined with nometals. If used in accordance with para. 122.9 for conveying corrosive liquids and gases, the design of the lined piping system shall meet the requirements of para. 104.7.

III-1.2.3 Nonmetallic piping systems shall not be installed in a confined space where toxic gases could be produced and accumulate, either from combustion of the piping materials or from exposure to flame or elevated temperatures from fire.

III-1.3 Definitions and Abbreviations

III-1.3.1 Terms and definitions relating to plastic and other nonmetallic piping materials shall be in accordance with ASTM D 883. The following terms and definitions are in addition to those provided in the ASTM standard.

adhesive: a material designed to join two other component materials together by surface attachment (bonding).

adhesive joint: a bonded joint made using an adhesive on the surfaces to be joined.

bonder: one who performs a manual or semiautomatic bonding operation

bonding operator: one who operates a machine or automatic bonding equipment.

bonding procedure: the detailed methods and practices involved in the production of a bonded joint.

Bonding Procedure Specification (BPS): the document that lists the parameters to be used in the construction of bonded joints in accordance with the requirements of this Code.

butt-and-wrapped joint: a joint made by applying plies of reinforcement saturated with resin to the surfaces to be joined.

Copyright ASME International
Provided by IHS under license with ASME
No reproduction or networking permitted without license from IHS
Not for Resale

Table III-4.1.1 Nonmetallic Material and Product Standards

Standard or Specification	Designation [Notes (1), (2)]
Nonmetallic Fittings	
Threaded Poly(Vinyl Chloride) (PVC) Plastic Pipe Fittings, Sch 80	ASTM D 2464-90
Poly(Vinyl Chloride) PVC Plastic Pipe Fittings, Schedule 40	ASTM D 2466-90a
Socket-Type Poly(Vinyl Chloride) (PVC) Plastic Pipe Fittings, Schedule 80	ASTM D 2467-90
Acrylonitrile-Butadiene-Styrene ABS Plastic Pipe Fittings, Schedule 40	ASTM D 2468-89
Thermoplastic Gas Pressure Pipe, Tubing, and Fittings	ASTM D 2513-90b
Reinforced Epoxy Resin Gas Pressure Pipe and Fittings	ASTM D 2517 (R1987)
Plastic Insert Fittings for Polyethylene (PE) Plastic Pipe	ASTM D 2609-90
Socket-Type Polyethylene Fittings for Outside Diameter-Controlled Polyethylene Pipe and Tubing	ASTM D 2683-90
Chlorinated Poly(Vinyl Chloride) CPVC Plastic Hot and Cold Water Distribution Systems	ASTM D 2846-90
Butt Heat Fusion Polyethylene (PE) Plastic Fittings for Polyethylene (PE) Plastic Pipe and Tubing	ASTM D 3261-90
Polybutylene (PB) Plastic Hot-Cold-Water Distribution Systems	ASTM D 3309-89a
Reinforced Thermosetting Resin (RTR) Flanges	ASTM D 4024-87
Threaded Chlorinated Poly(Vinyl Chloride) (CPVC) Plastic Pipe Fittings, Schedule 80	ASTM F 437-89a
Socket-Type Chlorinated Poly(Vinyl Chloride) (CPVC) Plastic Pipe Fittings, Schedule 40	ASTM F 438-89a
Socket-Type Chlorinated Poly(Vinyl Chloride) (CPVC) Plastic Pipe Fittings, Schedule 80	ASTM F 439-89
Electrofusion Type Polyethylene Fittings for Outside Diameter Controlled Polyethylene Pipe and Tubing	ASTM F 1055-98
Nonmetallic Pipe and Tube Products	
Polyethylene Line Pipe	API 15LE (1987)
Thermoplastic Line Pipe (PVC and CPVC)	API 15LP (1987)
Low Pressure Fiberglass Line Pipe	API 15LR (1986)
Concrete Sewer, Storm Drain, and Culvert Pipe	ASTM C 14-82
Acrylonitrile-Butadiene-Styrene (ABS) Plastic Pipe, Sch 40 and 80	ASTM D 1527-77 (1989)
Poly(Vinyl Chloride) (PVC) Plastic Pipe, Sch 40, 80 and 120	ASTM D 1785-89
Polyethylene (PE) Plastic Pipe, Schedule 40	ASTM D 2104-89
Polyethylene (PE) Plastic Pipe (SIDR-PR) Based on Controlled Inside Diameter	ASTM D 2239-89
Poly(Vinyl Chloride) (PVC) Pressure-Rated Pipe (SDR Series)	ASTM D 2241-89
Acrylonitrile-Butadiene-Styrene (ABS) Plastic Pipe (SDR-PR)	ASTM D2282-89
Machine-Made Reinforced Thermosetting-Resin Pipe	ASTM D 2310-80 (1986)
Polyethylene (PE) Plastic Pipe, Sch 40 and 80, Based on Outside Diameter	ASTM D 2447-89
Thermoplastic Gas Pressure Pipe, Tubing, and Fittings	ASTM D 2513-86A
Reinforced Epoxy Resin Gas Pressure Pipe and Fittings	ASTM D 2517 (R1987)
Polybutylene (PB) Plastic Pipe (SIDR-PR) Based on Controlled Inside Diameter	ASTM D 2662-89
Polybutylene (PB) Plastic Tubing	ASTM D 2666-89
Joints for IPS PVC Pipe Using Solvent Cement	ASTM D 2672-89
Polyethylene (PE) Plastic Tubing	ASTM D 2737-89
Chlorinated Poly(Vinyl Chloride) (CPVC) Plastic Hot- and Cold-Water Distribution System	ASTM D 2846-90
Filament-Wound “Fiberglass” (Glass-Fiber Reinforced Thermosetting-Resin) Pipe	ASTM D 2996-88
Centrifugally Cast Reinforced Thermosetting Resin Pipe	ASTM D 2997-90
Polybutylene (PB) Plastic Pipe (SDR-PR) Based on Outside Diameter	ASTM D 3000-89
Polyethylene (PE) Plastic Pipe (SDR-PR) Based on Controlled Outside Diameter	ASTM D 3035-89a
PB Plastic Hot-Water Distribution Systems	ASTM D 3309-89a
Chlorinated Poly(Vinyl Chloride) (CPVC) Plastic Pipe, Schedules 40 and 80	ASTM F 441-89
Chlorinated Poly(Vinyl Chloride) (CPVC) Plastic Pipe, (SDR-PR)	ASTM F 442-87
Plastic-Lined Ferrous Metal Pipe, Fittings, and Flanges [Note (3)]	ASTM F 1545-97
PVC Pressure Pipe, 4-inch through 12-inch, for Water	*AWWA C 900
AWWA Standard for Glass-Fiber-Reinforced Thermosetting-Resin Pressure Pipe	*AWWA C 950-88

Copyright ASME International
Provided by IHS under license with ASME
No reproduction or networking permitted without license from IHS
Not for Resale

Table III-4.1.1 Nonmetallic Material and Product Standards (Cont'd)

Standard or Specification	Designation [Notes (1), (2)]
Miscellaneous	
Standard Methods of Testing Vitrified Clay Pipe	ASTM C 301-87
Contact-Molded Reinforced Thermosetting Plastic (RTP) Laminates for Corrosion Resistant Equipment	ASTM C 582-87
Standard Definitions of Terms Relating to Plastics	ASTM D 297-81
Standard Abbreviations of Terms Relating to Plastics	ASTM D 1600-90
Threads 60° (Stub) for "Fiberglass" (Glass-Fiber-Reinforced Thermosetting-Resin) Pipe	*ASTM D 1694-91
Solvent Cements for Acrylonitrile-Butadiene-Styrene (ABS) Plastic Pipe and Fittings	ASTM D 2235-88
External Loading Properties of Plastic Pipe by Parallel-Plate Loading	ASTM D 2412-87
Solvent Cements for Poly(Vinyl Chloride) (PVC) Plastic Pipe and Fittings	ASTM D 2564-88
Heat-Joining Polyolefin Pipe and Fitting	ASTM D 2657-90
Obtaining Hydrostatic Design Basis for Thermoplastic Pipe Materials	ASTM D 2837-90
Making Solvent-Cemented Joints With Poly (Vinyl Chloride) (PVC) Pipe and Fittings	ASTM D 2855-90
Standard Test Method For External Pressure Resistance of Reinforced Thermosetting Resin Pipe	ASTM D 2924-86
Obtaining Hydrostatic or Pressure Design Basis for "Fiberglass" (Glass-Fiber-Reinforce Thermosetting-Resin) Pipe and Fittings	*ASTM D 2992-87
Joints for Plastic Pressure Pipes Using Flexible Elastomeric Seals	ASTM D 3139-89
Underground Installation of "Fiberglass" (Glass-Fiber Reinforced Thermosetting Resin) Pipe	ASTM D 3839-89
Design and Construction of Nonmetallic Enveloped Gaskets for Corrosive Service	ASTM F 336-87
Solvent Cements for Chlorinated Poly(Vinyl Chloride) (CPVC) Plastic Pipe and Fittings	ASTM F 493-89
Electrofusion Joining Polyolefin Pipe and Fitting	ASTM F 1290-98a
Plastic Pipe Institute (PPI) Technical Report Thermal Expansion and Contraction of Plastic Pipe	PPI TR21-88

GENERAL NOTE: This standard contains no pressure-temperature ratings. Paragraph III-2.1.2(B.3) applies.

NOTES:

(1) An asterisk (*) preceding the designation indicates that the standard has been approved as an American National Standard by the American National Standards Institute.

(2) Numbers in parentheses are reapproval dates.

chopped roving: a collection of noncontinuous glass strands gathered without mechanical twist. Each strand is made up of glass filaments bonded together with a finish or size for application by chopper gun.

chopped strand mat: a collection of randomly oriented glass fiber strands, chopped or swirled together with a binder in the form of a blanket.

continuous roving: a collection of continuous glass strands wound into a cylindrical package without mechanical twist.

curing agent: a reactive material which when combined with a resin material reacts or polymerizes (crosslinks) with the resin; also referred to as a hardener.

diluent: a reactive modifying material, usually liquid, which reduces the concentration of a resin material to facilitate handling characteristics and improve wetting.

electrofusion: a heat fusion joining process where the heat source is an integral part of the fitting, such that when electric current is applied, heat is produced that melts and joins the plastics.

fire retardant resin: a specially compounded material combined with a resin material designed to reduce or eliminate the tendency to burn.

flexibilizer: a modifying liquid material added to a resinous mixture designed to allow the finished component the ability to be flexed or less rigid and more prone to bending.

grout: a heavily filled paste material used to fill crevices and transitions between piping components.

heat fusion joint: a joint made by heating the surfaces to be joined and pressing them together so they fuse and become essentially one piece.

hot gas welded joint: a joint made by simultaneously heating a filler material and the surfaces to be joined with a stream of hot air or hot inert gas until the materials soften, after which the surfaces to be joined are pressed together and welded with the molten filler material.

liner: a coating or layer of material constructed as, applied to, or inserted within the inside surface of a piping component intended to protect the structure from chemical attack, to inhibit erosion, or to prevent leakage under strain.

seal weld: the addition of material external to a joint by welding or bonding for the purpose of enhancing leak tightness.

solvent cement joint: a joint using a solvent cement to soften the surfaces to be joined, after which the joining surfaces are pressed together and become essentially one piece as the solvent evaporates.

Copyright ASME International
Provided by IHS under license with ASME
No reproduction or networking permitted without license from IHS Not for Resale

stiffness factor: the measurement of a pipe's ability to resist deflection as determined in accordance with ASTM D 2412.

thixatropic agent: a material added to resin to impart high static shear strength (viscosity) and low dynamic shear strength.

ultraviolet absorber: a material which when combined in a resin mixture will selectively absorb ultraviolet radiation.

woven roving: a heavy glass fiber fabric reinforcing material made by the weaving of glass fiber roving

III-1.3.2 Abbreviations used in this Appendix denote materials and terms as follows:

Abbreviation	Term
ABS[2]	Acrylonitrile-butadiene-styrene
AP	Polyacetal
CP	Chlorinated polyether
CPVC[2]	Chlorinated poly (vinyl chloride)
DS	Design stress
FEP[2]	Perfluoro (ethylene propylene)
HDB	Hydrostatic design basis
HDS	Hydrostatic design stress
PA[2]	Polyamide (nylon)
PB	Polybutylene
PE[2]	Polyethylene
PFA	Poly (perfluoroalkoxy)
POP	Poly (phenylene oxide)
PP[2]	Polypropylene
PPS	Polyphenylene
PR	Pressure rated
PTFE[2]	Polytetrafluoroethylene
PVC[2]	Poly (vinyl chloride)
PVDC	Poly (vinylidene chloride)
PVDF	Poly(vinylidene fluoride)
RTR	Reinforced thermosetting resin
SDR	Standard dimensional ratio

III-2.0 DESIGN

III-2.1 Conditions and Criteria

III-2.1.1 General

(A) The Design Conditions of para. 101 shall apply for the design of nonmetallic piping systems.

(B) The design of nonmetallic piping systems must ensure the adequacy of material and its manufacture, considering at least the following:

(B.1) tensile, compressive, flexural, shear strength, and modulus of elasticity at design temperature (long-term and short-term)

(B.2) creep characteristics for the service conditions

(B.3) design stress and its basis

(B.4) coefficient of thermal expansion

(B.5) ductility and plasticity

(B.6) impact and thermal shock properties

(B.7) temperature limits for the service

(B.8) transition temperatures: melting and vaporization

(B.9) toxicity of the material or of the gases produced by its combustion or exposure to elevated temperatures

(B.10) porosity and permeability

(B.11) test methods

(B.12) methods of making joints and their efficiency

(B.13) deterioration in the service environment

(B.14) the effects on unprotected piping from external heat sources (particularly solar radiation)

III-2.1.2 Pressure-Temperature Ratings for Components

(A) Components having specific pressure-temperature ratings have been established in the standards listed in Table III-4.1.1. Other components may be used in accordance with para. III-2.1.2(B).

(A.1) Except as qualified in paras. III-2.1.3, the ratings of Tables III-4.2.1, III-4.2.2, and III-4.2.3 are the limiting values for allowable stresses at temperature in this Appendix.

(A.2) The application of pressures exceeding the pressure-temperature ratings of valves is not permitted. Valves shall be selected for operation within the limits defined in para III-2.1.2(C)

(B) Components Not Having Specific Ratings

(B.1) Pipe and other piping components for which allowable stresses have been developed in accordance with para. III-2.1.3, but which do not have specific pressure-temperature ratings, shall be rated by the rules for pressure design in para. III-2.2 within the range of temperatures for which stresses are listed in Tables III-4.2.1, III-4.2.2, and III-4.2.3.

(B.2) Custom-molded pipe and other piping components that do not have allowable stresses or pressure-temperature ratings shall be qualified for pressure design as required in para. III-2.2.9.

(B.3) When components other than described above, such as pipe or fittings not assigned pressure-temperature ratings in an ASME or American National Standard, are used, the manufacturer's recommended pressure-temperature rating shall not be exceeded.

(C) Allowances for Pressure and Temperature Variations

(C.1) Nonmetallic Piping. Allowances for variations of pressure, temperature, or both, above design conditions are not permitted. The most severe conditions of coincident pressure and temperature shall be used to determine the design conditions.

(C.2) Metallic Piping Lined With Nonmetals. Allowances for pressure and temperature variations provided in para. 102.2.4 are permitted only if the suitability of the lining material for the increased conditions is established through prior successful experience or tests under comparable conditions.

[2] Abbreviations in accordance with ASTM D 1600.

Copyright ASME International
Provided by IHS under license with ASME
No reproduction or networking permitted without license from IHS
Not for Resale

Table III-4.2.1 Hydrostatic Design Stresses (HDS) and Recommended Temperature Limits for Thermoplastic Piping Components

ASTM Spec. No.	Material	Recommended Temperature Limits [Notes (1), (2) ,(3)] Minimum, °F [Note (4)]	Maximum, °F [Note (5)]	Hydrostatic Design Stress at 73°F, ksi [Note (6)]	100°F, ksi	180°F, ksi
D 1527, D 2282, D 2513	ABS1210	0	180	1.0	0.8	...
	ABS1316	0	160	1.6	1.25	...
	ABS2112	0	180	1.25	1.0	...
...	AP	0	170	...	...	...
...	CP	0	210	0.8	...	...
D 2846, F 441, F 442	CPVC4120	0	200	2.0	1.6	0.5
...	PA	−20	180	...	...	...
D 2513, D 2662, D 2666, D 3000, D 3309	PB2110	0	210	1.0	0.8	0.5
D 2104, D 2239, D 2447, D 2513, D 2737, D 3035	PE2306	−30	140	0.63	0.4	...
	PE3306	−30	140	0.63	0.5	...
	PE3406	−30	140	0.63	0.5	0.25
	PE3408	−30	140	0.80	...	...
...	POP2125	30	210	...	...	...
...	PP	30	210	...	...	...
	PVC1120	0	140	2.0	1.6	...
D 1785, D 2241, D 2513, D 2672	PVC1220	0	150	2.0	1.6	...
	PVC2110	0	130	1.0	0.8	...
	PVC2112	0	130	1.25	1.0	...
	PVC2116	0	150	1.6	1.25	...
	PVC2120	0	150	2.0	1.6	...
...	PVDC	40	160	...	...	...
...	PVDF	0	275	...	...	...

Notes for this Table follow below Table III-4.2.3

(D) Considerations for Local Conditions. Where two services that operate at different pressure-temperature conditions are connected, the valve segregating the two services shall be rated for the most severe service conditions. Other requirements of para. 102.2.5 must be considered where applicable.

III-2.1.3 Allowable Stresses and Other Stress Limits

(A) General. Tables III-4.2.1, III-4.2.2, and III-4.2.3 list recommended maximum allowable stresses in the form of hydrostatic design stresses (HDS), allowable design stresses (DS), and the hydrostatic design basis (HDB), which may be used in design calculations except where modified by other provisions of this Appendix. The use of hydrostatic design stresses for calculations other than pressure design has not been established. The basis for determining allowable stresses and pressures is outlined in para. III-2.1.3(B). The allowable stresses are grouped by materials and listed for stated temperatures. Where

Copyright ASME International
Provided by IHS under license with ASME
No reproduction or networking permitted without license from IHS Not for Resale

Table III-4.2.2 Design Stresses (DS) and Recommended Temperature Limits for Laminated Reinforced Thermosetting Resin Piping Components

ASTM Spec. No.	Type	Resin	Reinforcing	Recommended Temperature Limits [Note (3)] Minimum, °F	Recommended Temperature Limits [Note (3)] Maximum, °F	Thickness, in.	Design Stress, ksi [Note (7)]
C 582	I	Polyester	Glass fiber	−20	180	1/8–3/16	0.9
						1/4	1.2
						5/16	1.35
						3/8 & up	1.5
...	...	Furan	Carbon	−20	180	...	...
...	...	Furan	Glass fiber	−20	180	...	...
C 582	II	Epoxy	Glass fiber	−20	180	1/8–3/16	0.9
						1/4	1.2
						5/16	1.35
						3/8 & up	1.5

Notes for this Table follow below Table III-4.2.3

sufficient data have been provided, straight-line interpolation between temperatures is permissible. The materials listed are available from one or more manufacturers and may be obtained with maximum allowable stresses varying from those listed in Tables III-4.2.1, III-4.2.2, and III-4.2.3. These materials and values are acceptable for use where they have been established in accordance with (B) below and para. III-2.2.9.

(B) Basis for Allowable Stresses for Internal Pressure

(B.1) Thermoplastics. A method of determining hydrostatic design stress (HDS) and pressure rating (PR) is described in ASTM D 2837. Hydrostatic design stresses are provided in Table III-4.2.1 for those materials and temperatures for which sufficient data have been compiled to substantiate a determination of stress. Data on these materials at other temperatures, and on other materials, are being developed. Pending publication of additional data, the limitations in para. III-2.1.2(B) shall be observed.

(B.2) Reinforced Thermosetting Resin (Laminated). For laminated piping components, the design stresses (DS) are listed in Table III-4.2.2. These typically are based on one-tenth of the minimum tensile strengths specified in Table 1 of ASTM C 582.

(B.3) Reinforced Thermosetting Resin (Filament Wound and Centrifugally Cast). For filament wound and centrifugally cast piping components, hydrostatic design basis (HDB) values are listed in Table III-4.2.3. These values may be obtained by procedures in ASTM D 2992. HDS may be obtained by multiplying the HDB by a service (design) factor[3] selected for the application, in accordance with procedures described in ASTM D 2992, within the following limits.

(B.3.1) When using the cyclic HDB from Table III-4.2.3, the service (design) factor shall not exceed 1.0.

(B.3.2) When using the static HDB from Table III-4.2.3, the service (design) factor shall not exceed 0.5.

III-2.1.4 Limits of Calculated Stresses Due to Sustained Loads

(A) Internal Pressure Stresses. The limits for stress due to internal pressure are provided in para. III-2.2.2.

(B) External Pressure Stresses. Stresses due to uniform external pressures shall be considered safe when the wall thickness of the component, and means of stiffening, have been established in accordance with para. III-2.2.9.

(C) External Loading Stresses. Design of reinforced thermosetting resin (RTR) and thermoplastic piping under external loading shall be based on the results of the parallel plate loading test in ASTM D 2412. The allowable deflection for RTR and thermoplastic pipe shall be 5% of the pipe diameter. Where other nonmetallic piping is intended for use under conditions of external loading, it shall be subject to a crushing or three-edge bearing test, in accordance with ASTM C 14 or C

[3] The service (design) factor should be selected by the designer after evaluating fully the service conditions and the engineering properties of the specific material under consideration. Aside from the limits in paras. III-2.1.3.(B.3.1) and (B.3.2), it is not the intent of the Code to specify service (design) factors.

Copyright ASME International
Provided by IHS under license with ASME
No reproduction or networking permitted without license from IHS
Not for Resale

Table III-4.2.3 Hydrostatic Design Basis (HDB) for Machine-Made Reinforced Thermosetting Resin Pipe

ASTM Spec. No. and Type	Grade	Class	Material Designation ASTM D 2310	HDB Stress [Note (8)] at 73°F [Notes (9), (10)] Cyclic, ksi [Note (11)]	HDB Stress [Note (8)] at 73°F [Notes (9), (10)] Static, ksi [Note (12)]
D 2517 filament wound	Glass fiber reinforced epoxy resin	No liner	RTRP-11AD	5.0	...
			RTRP-11AW	...	16.0
D 2996 filament wound	Glass fiber reinforced epoxy resin	No liner	RTRP-11AD	5.0	...
			RTRP-11AW	...	16.0
		Epoxy resin liner, reinforced	RTRP-11FE	6.3	...
			RTRP-11FD	5.0	...
	Glass fiber reinforced polyester resin	Polyester resin liner, reinforced	RTRP-12EC	4.0	...
			RTRP-12ED	5.0	...
			RTRP-12EU	...	12.5
		No liner	RTRP-12AD	5.0	...
			RTRP-12AU	...	12.5
D 2997 centrifugally cast	Glass fiber reinforced polyester resin	Polyester resin liner, nonreinforced	RTRP-22BT	...	10.0
			RTRP-22BU	...	12.5
		Epoxy resin liner, nonreinforced	RTRP-21CT	...	10.0
			RTRP-21CU	...	12.5

NOTES TO TABLES III-4.2.1, III-4.2.2, AND III-4.2.3:

(1) These recommended limits are for low pressure applications with water and other fluids that do not significantly affect the properties of the thermoplastic material. In conservative practice, the upper temperature limits may be reduced at higher pressures depending on the required service and expected life. Lower temperature limits are affected more by the environment, safeguarding, and installation conditions than by strength.
(2) Because of low thermal conductivity, temperature gradients through the piping component wall may be substantial. Tabulated limits apply where more than half the wall thickness is at or below the stated temperature.
(3) These recommended limits apply only to listed materials. Manufacturers should be consulted for temperature limits on specific types and kinds of materials not listed.
(4) Minimum for installation.
(5) Maximum for operation.
(6) Use these hydrostatic design stress values at all lower temperatures.
(7) The design stress (DS) values apply only in the temperature range of −20°F through 180°F.
(8) A service (design) factor must be applied to these HDB values to obtain the HDS.
(9) These HDB values apply only at 73°F.
(10) Recommended temperature limits for these materials are shown in Table III-4.2.2.
(11) When using the cyclic design basis, the service factor shall not exceed 1.0.
(12) When using the static design basis, the service factor shall not exceed 0.5.

301, and the allowable load shall be 25% of the minimum value obtained.

III-2.1.5 Limits of Calculated Stresses Due to Occasional Loads

(A) Operation. The total stress produced by pressure, live and dead loads, and by occasional loads, such as wind or earthquake, shall not exceed the considerations and recommendations in para. III-2.5. Wind and earthquake forces need not be considered as acting concurrently.

(B) Test. Stresses due to test conditions are not subject to the limitations in (A) above. It is not necessary to

Copyright ASME International
Provided by IHS under license with ASME
No reproduction or networking permitted without license from IHS Not for Resale

consider other occasional loads, such as wind and earthquake, as occurring concurrently with test loads.

III-2.1.6 Allowances

(A) Erosion, Corrosion, Threading, and Grooving. In determining the minimum required thickness of a piping component, allowances shall be included for erosion and for thread depth or groove depth.

(B) Mechanical Strength. When necessary, pipe wall thicknesses shall be increased to prevent overstress, damage, collapse, or buckling due to superimposed loads from supports, ice formation, backfill, or other causes. Where increasing thickness will cause excessive local stress, or is otherwise impractical, the required strength may be obtained through the use of additional supports, braces, or other means without an increased wall thickness. Particular consideration should be given to the mechanical strength of a small branch connected to large piping or to equipment.

III-2.2 Pressure Design of Piping Components

III-2.2.1 Criteria for Pressure Design. The design of piping components shall consider the effects of pressure and temperature in accordance with para. III-2.1.2, and provide for allowances in accordance with para. III-2.1.6. In addition, the design shall be checked for adequacy of mechanical strength under other applicable loadings as required in paras. III-2.1.4 and III-2.1.5.

(A) The required minimum wall thickness of straight sections of pipe t_m shall be determined in accordance with Eq. (1).

$$t_m = t + c \tag{1}$$

where

c = the sum of the mechanical allowances (thread or groove depth), plus erosion and/or corrosion allowance, and the manufacturer's minus tolerance for product wall thickness, in. For threaded components, the nominal thread depth shall apply. For machined surfaces or grooves where a tolerance is not specified, the tolerance shall be assumed to be 0.02 in., in addition to the specified depth of the thread or groove.

t = pressure design thickness, in., as calculated in para. III-2.2.2 for internal pressure, or in accordance with para. III-2.2.3 for external pressure

t_m = minimum required thickness, in.

III-2.2.2 Straight Pipe Under Internal Pressure

(A) The internal pressure design thickness t shall not be less than that calculated by the following equations.

(A.1) Thermoplastic Pipe

$$t = \frac{D}{2S_a/P + 1} \tag{2}$$

(A.2) Reinforced Thermosetting Resin (Laminated)

$$t = \frac{D}{2S_b/P + 1} \tag{3}$$

(A.3) Reinforced Thermosetting Resin (Filament Wound and Centrifugally Cast)

$$t = \frac{D}{2S_cF/P + 1} \tag{4}$$

where

D = outside diameter of pipe, in.

F = service design factor in accordance with para. III-2.1.3(B.3)

P = internal design gage pressure, psi

S_a = hydrostatic design stress from Table III-4.2.1

S_b = design stress from Table III-4.2.2

S_c = hydrostatic design basis from Table III-4.2.3

(A.4) Metallic Pipe Lined With Nonmetals. Pressure limitations shall be those established by the manufacturer, considering both pressure and temperature limitations of the metal housings and sealing ability of the liner at flanged joints. In addition, the metallic pipe shall meet the requirements of the mandatory sections of B31 including the pressure design requirements of ASME B31.1 Chapter II.

(B) The internal pressure design thickness t in (A.1) and (A.2) above shall not include any thickness of pipe wall reinforced with less than 30% (by weight) of reinforcing fibers, or added liner thickness.

III-2.2.3 Straight Pipe Under External Pressure

(A) Thermoplastic Pipe. The external pressure design thickness t shall be qualified as required by para. III-2.2.9

(B) Reinforced Thermosetting Resin Pipe

(B.1) Above Ground. For determining design pressure thickness for straight pipe under external pressure, the procedures outlined in ASTM D 2924 shall be followed. A safety factor of at least 4 shall be used.

(B.2) Below Ground. For determining design pressure thickness for straight pipe under external pressure in a buried condition, the procedures outlined in AWWA C-950, Appendix A, Sections A-2.5 and A-2.6 shall be followed.

(C) Metallic Pipe Lined With Nonmetals

(C.1) The external pressure design thickness for the base (outer) material shall be determined in accordance with para. 104.1.3.

(C.2) The external pressure design thickness t for the lining material shall be qualified as required by para. III-2.2.9.

III-2.2.4 Curved and Mitered Segments of Pipe

(A) Pipe Bends. The minimum required thickness t_m of a pipe bend after bending shall be determined as for straight pipe in accordance with para. III-2.2.1.

Copyright ASME International
Provided by IHS under license with ASME
No reproduction or networking permitted without license from IHS
Not for Resale

(B) Elbows. Manufactured elbows not in accordance with para. III-2.1.2 shall meet the requirements of para. III-2.2.9.

(C) Mitered Bends. Mitered bend sections shall meet the requirements of para. III-2.2.9.

III-2.2.5 Branch Connections

(A) General. A pipe having a branch connection is weakened by the opening that must be made in it, and unless the wall thickness of the pipe is sufficiently in excess of that required to sustain the pressure, it is necessary to provide added reinforcement. The amount of reinforcement required shall be in accordance with the requirements of para. III-2.2.9 except as provided in (B) and (C) below.

(B) Branch Connections Using Fittings. A branch connection shall be considered to have adequate strength to sustain the internal and external pressure which will be applied to it if a fitting (a tee, lateral, or cross) is utilized in accordance with para. III-2.1.2(A).

(C) Additional Considerations. The requirements of (A) and (B) above are designed to assure satisfactory performance of a branch connection subjected only to internal or external pressure. The designer shall also consider the following:

(C.1) external forces and moments which may be applied to a branch connection by thermal expansion and contraction, by dead and live loads, by vibration or pulsating pressure, or by movement of piping terminals, supports, and anchors

(C.2) adequate flexibility shall be provided in branch piping to accommodate movements of the run piping

(C.3) ribs, gussets, or clamps may be used for pressure-strengthening a branch connection in lieu of the reinforcement required by (A) above if the adequacy of the design is established in accordance with para. III-2.2.9

III-2.2.6 Closures. Closures in piping systems, such as those provided for temporary or future lateral or end-point branches, shall be made using fittings, flanges, or parts in accordance with paras. III-2.2.7 and III-2.2.9.

III-2.2.7 Pressure Design of Flanges

(A) General

(A.1) Nonmetallic flanges that are rated in accordance with published ASTM standards listed in Table III-4.1.1 shall be considered suitable for use within the limitations specified in this Appendix. Alternatively, flanges shall be in accordance with para. 103, or may be designed in conformance with the requirements of para. III-2.2.7 or III-2.2.9.

(A.2) Flanges for use with ring type gaskets may be designed in accordance with Section VIII, Division 1, Appendix 2 of the ASME Boiler and Pressure Vessel Code, except that the allowable stresses for nonmetallic components shall govern. All nomenclature shall be as defined in the ASME Code except the following:

P = design gage pressure

S_a = bolt design stress at atmospheric temperature. (Bolt design stresses shall not exceed those in Appendix A.)

S_b = bolt design stress at design temperature. (Bolt design stresses shall not exceed those in Appendix A.)

S_f = allowable stress for flange material from para. III-4.2

(A.3) The flange design rules in (A.2) above are not applicable for designs employing full-face gaskets that extend beyond the bolts or where flanges are in solid contact beyond the bolts. The forces and reactions in such a joint differ from those joints employing ring type gaskets, and the flanges should be designed in accordance with Section VIII, Division 1, Appendix Y of the ASME Boiler and Pressure Vessel Code. (Note that the plastic flange sealing surface may be more irregular than the sealing surface of a steel flange. For this reason, thicker and softer gaskets may be required for plastic flanges.)

(B) Blind Flanges. Blind flanges shall be in accordance with para. 103, or alternatively, may be designed in accordance with para. 104.5.2, except that the allowable stress for nonmetallic components shall be taken from the data in para. III-4.2. Otherwise, the design of blind flanges shall meet the requirements of para. III-2.2.9.

III-2.2.8 Reducers. Reducers not in compliance with para. 103 shall meet the requirements of para. III-2.2.9.

III-2.2.9 Design of Other Components

(A) Listed Components. Other pressure-retaining components manufactured in accordance with standards listed in Table III-4.1.1 may be utilized in accordance with para. III-2.1.2.

(B) Unlisted Components and Products. For pressure-retaining components and piping products not in accordance with the standards and specifications in Table III-4.1.1, and for proprietary components and joints for which the rules in paras. III-2.2.1 through III-2.2.8 do not apply, pressure design shall be based on calculations consistent with the design criteria of the Code. This must be substantiated by one or more of the following, with consideration given to applicable dynamic effects, such as vibration and cyclic operation, the effects of thermal expansion or contraction, and the load effects of impact and thermal shock:

(B.1) extensive successful service experience under comparable design conditions with similarly proportioned components or piping elements made of the same or like material

Copyright ASME International
Provided by IHS under license with ASME
No reproduction or networking permitted without license from IHS Not for Resale

(B.2) performance tests under design conditions, including applicable dynamic and creep effects, continued for a time period sufficient to determine the acceptability of the component or piping element for its design life

(B.3) for either (B.1) or (B.2) above, reasonable interpolations between sizes and pressure classes and reasonable analogies among related materials are permitted

III-2.3 Selection of Piping Components

III-2.3.1 General. Nonmetallic pipe, tubing, fittings, and miscellaneous items conforming to the standards and specifications listed in Table III-4.1.1 shall be used within the limitations of para. III-4.0 of this Appendix.

III-2.4 Selection of Piping Joints

III-2.4.1 General. Joints shall be suitable for the pressure-temperature design conditions and shall be selected giving consideration to joint tightness and mechanical strength under those conditions (including external loadings), the materials of construction, the nature of the fluid service, and the limitations of paras. III-2.4.2 through III-2.4.7.

III-2.4.2 Bonded Joints

(A) General Limitations. Unless limited elsewhere in para. III-2.4.2, joints made by bonding in accordance with para. III-5.1, and examined in accordance with para. III-6.2, may be used within other limitations on materials and piping components in this Appendix.

(B) Specific Limitations

(B.1) Fillet Joints. Fillet bonded joints may be used in hot gas welded joints, only, if in conformance with the requirements of para. III-5.1.3(A).

(B.2) Butt-and-Wrapped Joints. Butt-and-wrapped joints in RTR piping shall be made with sufficient strength to withstand pressure and external loadings.

III-2.4.3 Flanged Joints

(A) General Limitations. Unless limited elsewhere in para. III-2.4.3, flanged joints may be used, considering the requirements for materials in para. III-3.0, and for piping components in para. III-2.3, within the following limitations.

(A.1) Joints With Flanges of Different Ratings. Where flanges of different ratings are bolted together, the rating of the joint shall be that of the lower rated flange. Bolting torque shall be limited so that excessive loads will not be imposed on the lower rated flange in obtaining a tight joint.

(A.2) Metallic to Nonmetallic Flanged Joints. Where metallic and nonmetallic flanges are to be joined, both should be flat-faced. Full-faced gaskets are preferred. If full-faced gaskets are not used, bolting torque shall be limited so that the nonmetallic flange is not overloaded.

III-2.4.4 Expanded or Rolled Joints. Expanded or rolled joints are not permitted in nonmetallic piping systems.

III-2.4.5 Threaded Joints

(A) General Limitations

(A.1) Threaded joints may be used within the requirements for materials in para. III-3.0, and on piping components in para. III-2.3, within the following limitations:

(A.2) Threaded joints shall be avoided in any service where severe erosion or cyclic loading may occur, unless the joint has been specifically designed for these conditions.

(A.3) Where threaded joints are designed to be seal welded, thread sealing compound shall not be used.

(A.4) Layout of piping should minimize reaction loads on threaded joints, giving special consideration to stresses due to thermal expansion and the operation of valves.

(A.5) Metallic-to-nonmetallic and dissimilar nonmetallic threaded joints are not permitted in piping $2\frac{1}{2}$ in. NPS, and larger.

(A.6) Threaded joints are not permitted at design temperatures above 150°F.

(B) Specific Limitations

(B.1) Thermoplastic Resin Piping. Threaded joints in thermoplastic piping shall conform to the following requirements:

(B.1.1) The pipe wall shall be at least Schedule 80 thickness.

(B.1.2) Pipe threads shall conform to ASME B1.20.1 NPT. Threaded fittings shall be compatible with that standard.

(B.1.3) A suitable thread lubricant and sealant shall be specified.

(B.1.4) Threaded piping joints are not permitted in polyolefin materials[4] because of creep characteristics that must be considered.

(B.2) Thermosetting Resin Piping. Threaded joints in thermosetting resin piping shall conform to the following requirements:

(B.2.1) Threads shall be factory cut or molded on pipe ends and in matching fittings, with allowance for thread depth in accordance with para. III-2.2.1(A).

(B.2.2) Threading of plain ends of piping is not permitted except where such male threads are limited to the function of forming a mechanical lock with matching female threads during bonding.

(B.2.3) Factory cut or molded threaded nipples, couplings, or adapters bonded to plain end components, may be used where necessary to provide connections to threaded metallic piping.

[4] The polyolefin group of materials includes polyethylene, polypropylene, and polybutylene.

Copyright ASME International
Provided by IHS under license with ASME
No reproduction or networking permitted without license from IHS
Not for Resale

III-2.4.6 Caulked Joints. In liquid service, bell and spigot and other caulked joints shall be used within the pressure-temperature limitations of the joints and the components. Provisions shall be made to prevent disengagement of the joints at bends and dead ends and to support lateral reactions produced by branch connections or other causes.

III-2.4.7 Proprietary Joints. Metal coupling, mechanical, gland and other proprietary joints may be used within the limitations on materials in para. III-3.0, on components in para. III-2.3, and the following:

(A) Adequate provisions shall be made to prevent the separation of joints under internal pressure, temperature and external loads.

(B) Prior to acceptance for use, a prototype joint shall be subjected to performance tests to determine the safety of the joint under test conditions simulating all expected fluid service conditions.

III-2.4.8 Metallic Piping Lined With Nonmetals

(A) Welding is not permitted on lined components in the field. Welding performed by the manufacturer to produce pipe, fittings, and flanges to be used for joints in elastomeric lined piping systems shall be performed so as to maintain the continuity of the lining and its serviceability.

(B) Flared Linings

(B.1) General. Flared ends of linings made in accordance with the rules in para. III-5.5.2 may be used, subject to material limitations.

(B.2) Specific Requirements. Flaring shall be limited to applications that do not affect the serviceability of the lining.

III-2.5 Expansion and Flexibility

III-2.5.1 General Concepts

(A) Elastic Behavior. The concept of piping strain imposed by the restraint of thermal expansion or contraction, and by external movements, applies in principle to nonmetals. Nevertheless, the assumption that stresses can be predicted from these strains in a nonmetallic piping system, based on the linear elastic characteristics of the material, is generally not valid. The variation in elastic characteristics between otherwise similar material types, between source manufacturers, and between batch lots of the same source material, can at times be significant. If a method of flexibility analysis that assumes elastic behavior is used, the designer must be able to demonstrate its validity for the system and must establish conservative limits for the computed stresses.

(B) Overstrained Behavior. Stresses cannot be considered proportional to displacement strains in nonmetallic piping systems where an excessive level of strain may be produced in a localized area of the system, and in which elastic behavior of the piping material is uncertain. (See unbalanced systems in para. 119.3 of the Code.) Overstrain must be minimized by effective system routing in order to avoid the necessity of a requirement for special joints or expansion devices for accommodating excessive displacements.

(C) Progressive Failure. In thermoplastics and some thermosetting resins, displacement strains are not likely to produce immediate failure of piping but may produce unacceptable distortion. Thermoplastics, particularly, are prone to progressive deformation that may occur upon repeated thermal cycling or under prolonged exposure to elevated temperature.

(D) Brittle Failure. In brittle thermosetting resins, the materials are essentially rigid in behavior and may readily develop high-displacement stresses, to the point of sudden breakage or fracture, under moderate levels of strain.

III-2.5.2 Properties for Flexibility Analysis

(A) Thermal Expansion Data. Table III-4.3.1 of this Appendix lists coefficients of thermal expansion for several nonmetallic materials. More precise values in some instances may be obtained from the manufacturers of these materials. If these values are to be used in stress analysis, the thermal displacements shall be determined as indicated in para. 119.

(B) Modulus of Elasticity. Table III-4.3.2 lists representative data on the tensile modulus of elasticity E for several nonmetals. More precise values in some instances may be obtained from the materials manufacturer. (Note that the modulus may vary with the geometrical orientation of a test sample for filler-reinforced, filament-wound, or impregnated nonmetallic materials.) For materials and temperatures not listed, refer to an authoritative source, such as publications of the National Bureau of Standards.

(C) Poisson's Ratio. For nonmetals, Poisson's ratio will vary widely, depending upon materials and temperature. For that reason formulas used in linear elastic stress analysis can be used only if the manufacturer has test data to substantiate the use of a specific Poisson's ratio for that application.

(D) Dimensions. The nominal thickness and outside diameters of pipe and fittings shall be used in flexibility calculations.

(E) Metallic Pipe Lined With Nonmetals. Flexibility and stress analysis for metallic pipe lined with nonmetals shall be in accordance with para. 119, except that any limitations on allowable stresses or moments recommended by the manufacturers of the lined pipe shall be observed.

III-2.5.3 Analysis

(A) Formal stress analysis is not required for systems that:

--`,,```,,,,````-`-`,,`,,`,`,,`---
Copyright ASME International
Provided by IHS under license with ASME
No reproduction or networking permitted without license from IHS Not for Resale

Table III-4.3.1 Thermal Expansion Coefficients, Nonmetals

Material Description	Mean Coefficients [Note (1)] in./in., °F	Range, °F
Thermoplastics		
Acetal AP2012	2	...
Acrylonitrile-butadiene-styrene		
ABS 1208	60	...
ABS 1210	55	45–55
ABS 1316	52	...
ABS 2112	60	...
Chlorinated poly (vinyl chloride)		
CPVC 4120	30	...
Polybutylene PB 2110	72	...
Polyether, chlorinated	45	...
Polyethylene		
PE 2306	90	70–100
PE 3306	90	70–120
PE 3406	90	70–120
PE 3408	90	70–120
Polyphenylene POP 2125	30	...
Polypropylene		
PP1110	48	33–67
PP1208	43	...
PP2105	40	...
Poly (vinyl chloride)		
PVC1120	30	23–373
PVC1220	35	34–40
PVC2110	50	...
PVC2112	45	...
PVC2116	40	37–45
PVC2120	30	...
Vinylidine fluoride	85	...
Vinylidine/vinyl chloride	100	...
Reinforced Thermosetting Resins		
Glass-epoxy, centrifugally cast	9–13	...
Glass-polyester, centrifugally cast	9–15	...
Glass-polyester, filament-wound	9–11	...
Glass-polyester, hand lay-up	12–15	...
Glass-epoxy, filament-wound	9–13	...
Other Nonmetallic Materials		
Hard rubber (Buna N)	40	...

NOTE:
(1) Divide table values by 10^6.

(A.1) are duplicates, or replacements without significant change, of successfully operating installations

(A.2) can readily be judged adequate by comparison with previously analyzed systems

(A.3) are routed with a conservative margin of inherent flexibility, or employ joining methods or expansion joint devices, or a combination of these methods, in accordance with applicable manufacturer's instruction

(B) A substantiating stress analysis is required for a system not meeting the above criteria. The designer may demonstrate that adequate flexibility exists by employing a simplified, approximate, or comprehensive stress analysis, using a method that can be shown to be valid for the specific case. If essentially elastic behavior can be demonstrated for a piping system [see para. III-2.5.1(A)], the methods outlined in para. 119 may be applicable.

(C) Special attention shall be given to movement (displacement or rotation) of the piping with respect to supports and points of close clearance. Movements of a run at the junction of a small branch shall be considered in determining the need for flexibility in the branch.

Copyright ASME International
Provided by IHS under license with ASME
No reproduction or networking permitted without license from IHS Not for Resale

Table III-4.3.2 Modulus of Elasticity, Nonmetals

Material Description	*E*, ksi (73.4°F) [Note (1)]
Thermoplastics	
Acetal	410
ABS, Type 1210	300
ABS, Type 1316	340*
PVC, Type 1120	410
PVC, Type 1220	410
PVC, Type 2110	340*
PVC, Type 2116	360
Chlorinated PVC	420*
Chlorinated Polyether	160*
PE, Type 2306	120
PE, Type 3306	130
PE, Type 3406	130
PE, Type 3408	130
Polypropylene	120*
Polypropylene (vinylidene/chloride)	100*
Poly(vinylidene fluoride)	194*
Poly(tetrafluoroethylene)	57*
Poly(fluorinated ethylenepropylene)	67*
Poly(perfluoroalkoxy)	100*
Thermosetting Resins, Axially Reinforced	
Epoxy-glass, centrifugally cast	1,200–1,900
Epoxy-glass, filament-wound	1,100–2,000
Polyester-glass, centrifugally cast	1,200–1,900
Polyester-glass, filament-wound	1,100–2,000
Polyester-glass, hand lay-up	800–1,000
Other	
Hard rubber (Buna N)	300

NOTE:
(1) The modulus of elasticity values for thermosetting resin pipe are given in the longitudinal direction; different values may apply in the circumferential or hoop direction. The modulus of elasticity values for thermoplastic resin pipe are temperature-dependent and stress-time related. Values noted with an asterisk (*) have not been confirmed by industry-accepted standards. In all cases for materials listed in this Table, manufacturers may be consulted for specific product information.

III-2.5.4 Flexibility

(A) Piping systems shall have sufficient flexibility to prevent the effects of thermal expansion or contraction, the movement of pipe supports or terminal points, or pressure elongation from causing

(A.1) failure of piping or supports from overstrain or fatigue

(A.2) leakage at joints

(A.3) unacceptable stresses or distortion in the piping or in connected equipment

(B) Where nonmetallic piping and components are used, piping systems must be designed and routed so that flexural stresses resulting from displacements due to expansion, contraction and other causes are minimized. This concept requires special attention for supports and restraints, the terminal connections, and for the techniques outlined in para. 119.5.1. Further information on the design of thermoplastic piping can be found in PPI Technical Report TR-21.

(C) For metallic piping lined with nonmetals, the designer must consider the integrity of the lining in designing for piping flexibility. This is a special consideration for linings less flexible than the metallic piping, such as glass or ceramics.

III-2.6 Design of Pipe Supporting Elements

III-2.6.1 General. In addition to the other applicable requirements of paras. 120 and 121, supports, guides, and anchors shall be selected and applied to comply with the requirements of para. III-2.5, and the following.

(A) Support or restraint loads shall be transmitted to piping attachment or bearing points in a manner that will preclude pipe wall deformation or damage. Padding or other isolation material should be installed in support or restraint clearance spaces for added protection.

(B) Valves and in-line components shall be independently supported to prevent the imposition of high load effects on the piping or adjacent supports.

(C) Nonmetallic piping should be guarded where such systems are exposed to casual damage from traffic or other work activities.

(D) A manufacturer's recommendations for support shall be considered.

III-2.6.2 Thermoplastic and RTR Piping. Supports shall be spaced to avoid excessive displacement at design temperature and within the design life of the piping system. Decreases in the modulus of elasticity, with increasing temperature, and creep of the material, with time, shall be considered where applicable. The coefficient of thermal expansion of most plastic materials is high and must be considered in the design and location of supports and restraints.

III-2.7 Burial of RTR Pipe

III-2.7.1 Design. The design procedures of ANSI/AWWA C-950, Appendix A shall apply. A minimum pipe stiffness shall meet the requirements in Table 6 of ANSI/AWWA C-950. The minimum stiffness ($F/\Delta y$) shall be determined at 5% deflection using the apparatus and procedures of ASTM D 2412.

III-2.7.2 Installation. The pipe manufacturer's recommendations shall be equal to or more stringent than those described in ASTM D 3839 for RTR pipe or ASTM D 2774 for thermoplastic pipe. The manufacturer's recommendations should be followed.

III-3.0 MATERIALS

III-3.1 General Requirements

Paragraph III-3.0 provides limitations and qualifications for materials based on their inherent properties.

Copyright ASME International
Provided by IHS under license with ASME
No reproduction or networking permitted without license from IHS Not for Resale

The use of these materials in piping may also be subject to requirements and limitations in other parts of the Code.

III-3.2 Materials and Specifications

III-3.2.1 Listed Materials. Listed materials used in pressure containing piping shall have basic allowable stresses and other design limits as covered in para. III-2.1.

III-3.2.2 Unlisted Materials. Unlisted materials used in pressure containing piping shall have basic allowable stresses and other design limits determined in accordance with para. III-2.1, or on a more conservative basis.

III-3.2.3 Unknown Materials. Materials of an unknown specification or standard shall not be used.

III-3.2.4 Reclaimed Materials. Reclaimed piping components may be used provided they are properly identified as conforming to a listed specification and otherwise meet the requirements of this Appendix. Sufficient cleaning and examination shall be performed to determine that the components are acceptable for the intended service, considering at least the following:

(A.1) minimum available wall thickness
(A.2) extent of any imperfections
(A.3) possible loss of strength
(A.4) chemical absorption

III-3.3 Temperature Limitations

The designer shall determine that materials which meet other requirements of this Appendix are suitable for the fluid service throughout the operating temperature range of the systems in which the materials will be used.

III-3.3.1 Upper Temperature Limitations

(A) The maximum design temperature for a listed material shall not exceed maximum temperatures listed in Tables III-4.2.1, III-4.2.2, or III-4.2.3, as applicable, except as provided in para. III-2.1.3(A).

(B) An unlisted material acceptable under para. III-3.2.2 shall have upper temperature limits established in accordance with para. III-2.1.2.

III-3.3.2 Lower Temperature Limitations

(A) The minimum design temperature for a listed material shall not be lower than the minimum temperatures listed in Tables III-4.2.1 and III-4.2.2, as applicable, except as provided in para. III-2.1.3(A).

(B) An unlisted material acceptable under para. III-3.2.2 shall have lower temperature limits established in accordance with the manufacturer's recommendation but in no case less than −20°F.

III-3.4 Fluid Service Limitations

III-3.4.1 General Limitations. The use of nonmetallic piping materials and components, under the scope of this Appendix, shall be limited to those services and conditions stated in para. III-1.2.2. In addition

(A) Nonmetallic materials shall not be used under severe cyclic conditions unless it can be demonstrated that the materials are suitable for the intended service in accordance with para. III-2.2.9.

(B) These materials shall be appropriately protected against transient or operating temperatures and pressures beyond design limits, and shall be adequately protected against mechanical damage.

(C) Limitations on the use or application of materials in this Appendix apply to pressure containing parts. They do not apply to the use of materials for supports, linings, gaskets, or packing.

III-3.4.2 Specific Material Limitations

(A) Thermoplastics shall be installed and protected against elevated temperatures.

(B) Thermosetting and fiber-reinforced thermosetting resins shall be limited to the services stated in para. III-1.2.3 and shall be installed and protected against mechanical damage, vibration, and excessive cyclic strain in service.

III-3.4.3 Miscellaneous Materials: Joining and Auxiliary Materials. When selecting materials, such as cements, solvents, packing, and O-rings for making or sealing joints, the designer shall consider their suitability for the fluid service.

III-3.5 Piping Component Requirements

III-3.5.1 Dimensions of Piping Components

(A) Listed Piping Components. Dimensions of listed piping components, including tolerances, shall conform to the applicable piping component specification or standard listed in Table III-4.1.1.

(B) Unlisted Piping Components. Dimensions of unlisted piping components, including tolerances, shall conform to those of comparable listed piping components insofar as practical. In all cases, dimensions shall be such as to provide strength and performance equivalent to listed piping components and shall meet the requirements of para. III-2.2.9.

(C) Threads. Dimensions of piping connection threads not covered by a governing component specification or standard shall conform to para. III-2.4.5.

III-4.0 SPECIFICATIONS AND STANDARD DATA

III-4.1 Material Specifications and Standards

III-4.1.1 Standard Piping Components. Dimensions of standard piping components shall comply with the standards and specifications listed in Table III-4.1.1, in accordance with the requirements of para. III-2.1.2(A). Abbreviations used in this Appendix and in Table III-4.1.1 are listed in para. III-1.3.2.

Copyright ASME International
Provided by IHS under license with ASME
No reproduction or networking permitted without license from IHS
Not for Resale

III-4.1.2 Nonstandard Piping Components. Where nonstandard piping components are designed in accordance with para. III-2.2, adherence to dimensional standards of ANSI and ASME is strongly recommended where practical.

III-4.1.3 Reference Documents

(A) The documents listed in Table III-4.1.1 may contain references to codes, standards, or specifications not listed in the Table. Such unlisted codes, standards, or specifications are to be used only in the context of the listed documents in which they appear.

(B) Where documents listed in Table III-4.1.1 contain design rules that are in conflict with this Appendix, the design rules of this Appendix shall govern.

(C) The fabrication, assembly, examination, inspection, and testing requirements of paras. III-5.0 and III-6.0 of this Appendix apply to the construction of piping systems. These requirements are not applicable to the manufacture of material or components listed in Table III-4.1.1, unless specifically stated.

III-4.2 Stress and Temperature Limits

Tables III-4.2.1, III-4.2.2, and III-4.2.3 provide listings of the stress and recommended temperature limits for the following, in accordance with paras. III-2.1.3(A) and (B).

III-4.2.1 Thermoplastic Piping Components. Table III-4.2.1 provides hydrostatic design stresses (HDS) and recommended temperature limits for thermoplastic piping components.

III-4.2.2 Laminated Reinforced Thermosetting Resin Piping Components. Table III-4.2.2 provides design stresses (DS) and recommended temperature limits for laminated reinforced thermosetting resin piping components.

III-4.2.3 Machine-Made Reinforced Thermosetting Resin Pipe. Table III-4.2.3 provides hydrostatic design bases (HDB) at a temperature level of 73°F for machine-made reinforced thermosetting resin pipe.

III-4.2.4 Notes for Tables III-4.2.1, III-4.2.2, and III-4.2.3. Notations may be identified in the body of Tables 4.2.1, 4.2.2, and 4.2.3 relative to the information, as applicable, in Notes (1) through (10) that follow Table III-4.2.3.

III-4.3 Standard Data

The following data are available and are acceptable for design purposes at the present time. It should be noted for all properties that individual compounds may vary from the values shown. Manufacturers should be consulted for specific values that may be applicable for their products.

III-4.3.1 See Table III-4.3.1 Thermal Expansion Coefficients, Nonmetals.

III-4.3.2 See Table III-4.3.2 Modulus of Elasticity, Nonmetals.

III-5.0 FABRICATION, ASSEMBLY, AND ERECTION

III-5.1 Bonding Plastic Joints

III-5.1.1 General

(A) Bonded joints that conform to para. III-5.0 may be used in accordance with para. III-2.4.2.

(B) Production joints shall be made only in accordance with a written Bonding Procedure Specification (BPS) that has been qualified in accordance with para. III-5.1.2.

(C) Production joints shall be made only by qualified bonders or bonding operators who have satisfactorily passed a performance qualification test that has been performed in accordance with a written BPS in accordance with para. III-5.1.2.

(D) Qualification in one BPS does not qualify a bonder or bonding operator for any other bonding procedure.

(E) Bonding materials that have deteriorated by exposure to air or prolonged storage or which will not spread smoothly shall not be used.

(F) Longitudinal joints are not within the scope of para. III-5.1.

(G) Joint Identification. Each qualified bonder and bonding operator shall be assigned an identification symbol. Unless otherwise specified in the engineering design, each pressure containing bond or adjacent area shall be stenciled or otherwise suitably marked with the identification symbol of the bonder or bonding operator. Identification stamping shall not be used and any marking paint or ink shall not be detrimental to the piping material. In lieu of marking the bond, appropriate records shall be filed.

III-5.1.2 Qualification

(A) Qualification of the BPS to be used, and of the performance of bonders and bonding operators, is required. Bonding Procedure Specifications shall specify, for both the bonding operation and qualification testing requirements, all required materials, including material storage requirements; the fixtures and tools required, including the care of tools; and the temperature requirements for all operations, including the methods required for temperature measurement.

(B) Bonding Responsibility. An employer of bonding personnel is responsible for the bonding done by members of his organization and, except as provided in (C) below, shall conduct the required performance qualification tests to qualify the bonding procedure specifications and the bonders or bonding operators.

(C) Qualification by Others

(C.1) Bonding Procedure Specification (BPS). The piping system erector shall be responsible for qualifying a BPS that personnel of his organization will use. Subject to the specific approval of the designer, a BPS qualified

Copyright ASME International
Provided by IHS under license with ASME
No reproduction or networking permitted without license from IHS
Not for Resale

by others may be used if the following conditions apply.

(C.1.1) The designer accepts that the proposed qualified BPS has been prepared and executed by a responsible recognized organization with expertise in the field of bonding.

(C.1.2) The designer accepts both the BPS and Procedure Qualification Record (PQR) by signature as his own.

(C.1.3) The piping erector has at least one bonder, currently employed, who has satisfactorily passed a performance qualification test using the proposed qualified BPS.

(C.2) Bonding Performance Qualification. A piping erector shall not accept a performance qualification test made by a bonder or bonding operator for another piping erector without the designer's specific approval. If approval is given, acceptance is limited to performance qualification tests on piping using the same or an equivalent BPS. The piping erector accepting such performance qualification tests shall obtain a copy of the PQR from the previous erector, showing the name of the piping erector by whom bonders or bonding operators were qualified, the dates of such qualification, and the date the bonder or bonding operator last assembled pressure piping under the previous performance qualification.

(D) Qualification tests for the bonding procedure and operator performance shall comply with the requirements of the BPS and the following.

(D.1) A test assembly shall be fabricated in accordance with the bonding procedure specification. The test assembly shall consist of at least one pipe-to-pipe joint and one pipe-to-fitting joint. The size of the pipe used for the test assembly shall be as follows.

(D.1.1) When the largest size to be joined (within the BPS) is 4 in. NPS or smaller, the test assembly shall be the same NPS as the largest size to be joined.

(D.1.2) When the largest size to be joined within the BPS is greater than 4 in. NPS, the test assembly shall be made of piping components either 4 in. NPS or a minimum of 25% of the NPS of the largest piping component to be joined, whichever is larger.

(D.2) The test assembly shall be subjected to one of the following qualification test operations.

(D.2.1) When the test assembly has been cured, it shall be subjected to a hydrostatic pressure test of themaximum of either 150 psig or 1.5 times an equivalent allowable pressure which shall be calculated using the least nominal wall thickness and outside diameter of the pipe in the test assembly. This pressure shall be determined using the equation in para. III-2.2.2(A) for the test material. The test shall be conducted so that the joint is loaded in both the circumferential and longitudinal directions. Joints shall not leak or separate when tested.

(D.2.2) When a test assembly is joined by heat fusion, the fusion joints may be tested by cutting a minimum of three coupons containing the joint and bending the strips using a procedure which shall be defined in the BPS. As a minimum requirement, the test strips shall not break when bent a minimum of 90 deg, at ambient temperature, over an inside bend radius of 1.5 times the nominal diameter of the tested pipe.

(E) Performance Requalification

(E.1) Renewal of a bonding performance qualification is required when

(E.1.1) a bonder or bonding operator has not used the specific bonding process for a period of time greater than 6 months, or a specific maximum period of time otherwise permitted in the BPS for the work

(E.1.2) there is a specific reason to question a bonder or bonding operator's ability to make bonds that meet the BPS

(E.2) Renewal of a bonding performance qualification for a specific bonding process may be made in only a single test assembly.

(F) Qualification Records. An erector using bonders, or bonder operators, shall maintain a record of the procedures used and of operators employed by him who are qualified in these procedures.

III-5.1.3 Thermoplastic Joints

(A) Solvent-Cemented Joints

(A.1) Preparation. PVC and CPVC surfaces to be cemented shall be cleaned by wiping with a clean cloth moistened with acetone or methylethyl ketone. Cleaning for ABS shall conform to ASTM D 2235. Cuts shall be free of burrs and circumferential cuts shall be as square as those obtained by the use of a saw with a miter box or a square-end sawing vise. A slight interference fit between the pipe and a fitting socket is preferred, and the diametral clearance between a pipe and the entrance of a mating socket shall not exceed 0.04 in. This fit shall be checked before solvent cementing.

(A.2) Procedure. Joints shall be made in accordance with a qualified BPS. ASTM D 2855 provides a suitable basis for such a procedure. Solvent cements for PVC, CPVC, and ABS shall conform to ASTM D 2564, D 2846, and D 2235, respectively. Cement shall be applied to both joint surfaces. The amount of cement shall be sufficient to produce a small continuous fillet of cement at the outer limits of the joints. See Fig. III-5.1.3(A)

(A.3) Branch Connections. For branch connections not using a tee, a manufactured full reinforcement saddle with an integral branch socket shall be solvent cemented to the run pipe over its entire contact surface.

(A.4) Limitations on Imperfections. Imperfections exceeding the following limitations are considered defects and shall be repaired and reexamined in accordance with para. III-5.1.5:

(A.4.A) protrusion of dried cement exceeding 50% of pipe wall thickness into the bore of the pipe

(A.4.B) unfilled or unbonded areas in a joint as indicated by the lack or interruption of the continuous fillet noted in (A.2) above

Copyright ASME International
Provided by IHS under license with ASME
No reproduction or networking permitted without license from IHS
Not for Resale

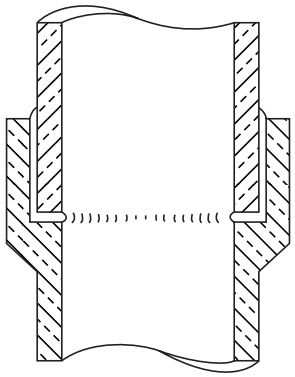

Fig. III-5.1.3(A)

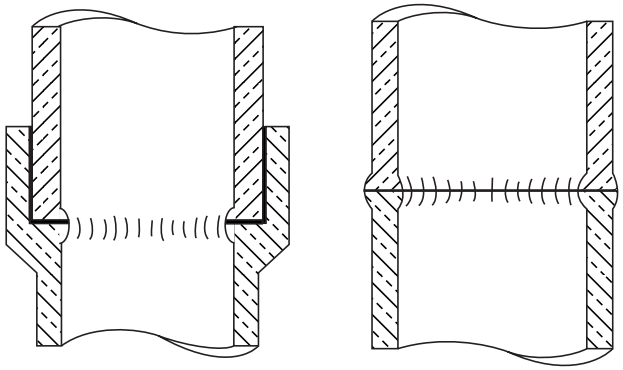

Fig. III-5.1.3(B)

(B) Heat Fusion Joints

(B.1) Preparation. Surfaces to be heat fused together shall be cleaned of any foreign material. Cuts shall be free of burrs, and circumferential cuts shall be as square as those obtained by the use of a saw with a miter box or a square-end sawing vise.

(B.2) Procedure. Joints shall be made in accordance with a qualified BPS. The general procedures in ASTM D 2657, Technique I-Socket Fusion, II-Butt Fusion, and III-Saddle Fusion provide a suitable basis for such a procedure. Both surfaces to be joined shall be uniformly heated to produce a continuous homogeneous bond between them. This will produce a small continuous fillet of fused material at the outer limits of the joints. See Fig. III-5.1.3(B).

(B.3) Branch Connections. Branch connections shall be made only with the use of molded fittings in sizes that are commercially available.

(B.4) Limitations on Imperfections. Imperfections exceeding the following limitations are considered defects and shall be repaired and reexamined in accordance with para. III-5.1.5:

(B.4.A) protrusion of fused material exceeding 25% of the pipe wall thickness into the bore of the pipe

(B.4.B) unfilled or unbonded areas in a joint as indicated by the lack or interruption of the continuous fillet noted in (B.2) above

(C) Electrofusion Joints

(C.1) Preparation. Surfaces to be heat fused together shall be cleaned of all foreign material.

(C.2) Procedure. Joints shall be made in accordance with the qualified BPS. The general procedures in ASTM F 1290, "Technique 1 — Coupling Procedure" and "Technique 2 — Saddle Procedure," provide a suitable basis for the development of such a procedure. See Fig. III-5.1.3(C).

III-5.1.4 Thermosetting Resin Joints

(A) Preparation. Cutting of pipe and preparation of bonding surfaces shall be done, as recommended by the manufacturer, without chipping or cracking of the cut ends; particularly, the inner surface of centrifugally cast pipe. Pipe may be preheated, if necessary, to comply with the above requirements. Cuts shall be free of burrs, and circumferential cuts shall be as square as required by the purchaser's specifications or the recommendations of the manufacturer, whichever requires the closer squareness. For branch connections, holes in the run pipe may be made with a hole saw. Mold release agent and any other material which may interfere with adhesion shall be removed from surfaces to be bonded.

(B) Joining Procedures

(B.1) Socket and Spigot Joints. Joints shall be made in accordance with a qualified BPS based on the manufacturer's recommended procedure. Application of adhesive to the surfaces to be joined, and assembly of those surfaces shall produce a continuous bond between them. Cut ends of the pipe and edges of the laminate fabric shall be sealed to prevent fluid penetration of the pipe wall or the laminate material.

(B.2) Butt-and-Wrap Joints. Joints shall be made in accordance with a qualified BPS. The general procedures in ASTM C 582 Contact-Molded Reinforced Thermosetting Plastic (RTP) Laminates for Corrosion Resistant Equipment provide a suitable basis for the development of such a procedure. Application of plies of reinforcement, saturated with catalyzed resin, to the surfaces to be joined shall produce a continuous structure with the surfaces. Cut ends shall be sealed as required in (B.1) above.

(C) Branch Connections. Branch connections shall be made using a manufactured tee fitting or a full reinforcement saddle having suitable provisions for joining as in (B) above. The cut edges of any hole in the run pipe shall be sealed with adhesive at the time the saddle is bonded to the run pipe.

(D) Limitations on Imperfections. Imperfections exceeding the following limitations are considered

Copyright ASME International
Provided by IHS under license with ASME
No reproduction or networking permitted without license from IHS
Not for Resale

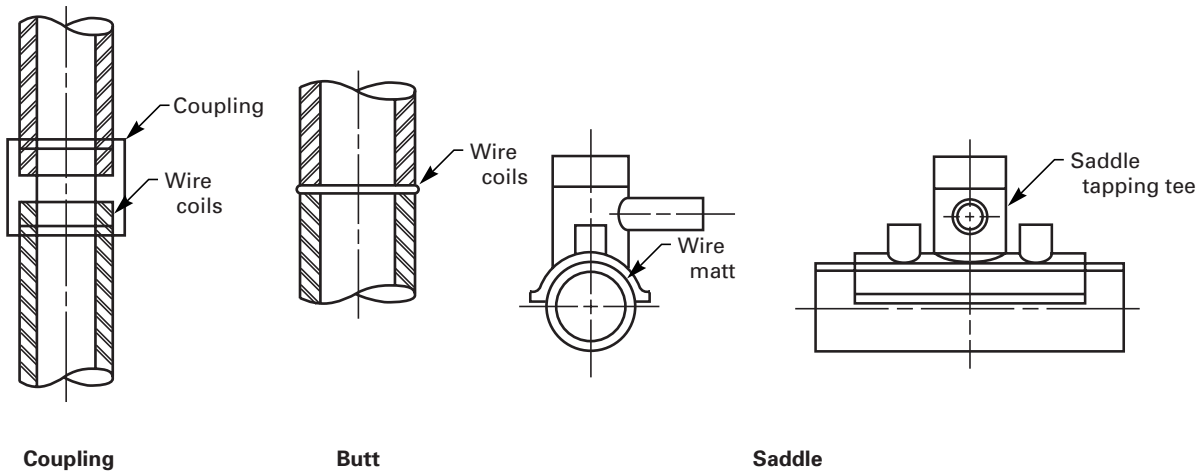

Fig. III-5.1.3(C) Thermoplastic Electrofusion Joints

defects and shall be repaired and reexamined in accordance with para. III-5.1.5:

(D.1) protrusion of adhesive exceeding 25% of pipe wall thickness into the bore at the bottom of a socket, or inside a branch connection

(D.2) unfilled or unbonded areas in the joint

III-5.1.5 Repair of Defects. Defective material, joints and other workmanship in piping which fail to meet the requirements of paras. III-3.0 and III-5.0, and of the engineering design, shall be repaired or replaced. Limitations on imperfections, and the method and extent of the required examination of repairs and replacements, shall be the same as for the original work.

III-5.2 Bending

III-5.2.1 Pipe Bending. Flattening of a bend is defined as the difference between the maximum and minimum outside diameters, at any cross section, expressed as a percentage of the nominal outside diameter. Flattening shall not exceed 8% for pipe exposed to internal pressure. For pipe under external pressure, flattening shall not exceed 3%. The thickness after bending shall not be less than that required in para. III-2.2.4(A).

III-5.2.2 Bending Methods. Pipe may be bent by any suitable hot or cold method permissible by radii limitations and material characteristics of the pipe being bent. Hot bending shall be done within a temperature range consistent with material characteristics, end-use requirements, and the pipe manufacturer's recommendations.

III-5.3 Component Forming

Piping components may be formed by any suitable hot or cold method permissible by the characteristics of the material being formed. Forming shall be done within a temperature range consistent with the material characteristics, end-use requirements, and the component manufacturer's recommendations. The thickness after forming shall not be less than that required by the engineering design.

III-5.4 Assembly and Erection

III-5.4.1 General. The assembly and erection of nonmetallic piping systems shall comply with the requirements of para. 135 of the Code and para. III-5.0 of this Appendix. In addition

(A) When assembling nonmetallic flanges, flat washers shall be used under all bolt heads and nuts. The specified maximum bolt torque shall not be exceeded.

(B) Full circumference wrenches shall be used to tighten threaded pipe joints. Tools and other devices used to hold or apply forces to the pipe shall be such that pipe surfaces are not scored or deeply scratched. For thermosetting resin piping, threads shall be coated with sufficient adhesive to cover the threads and completely fill the clearance between the pipe and fittings.

III-5.5 Fabrication of Metallic Piping Lined With Nonmetals

III-5.5.1 Welding of Metallic Piping Lined With Nonmetals. Welding is not permitted on lined components in the field. Welding performed by the manufacturer to produce pipe, fittings, and flanges to be used in elastomeric lined piping systems shall conform to the requirements of ASME Section IX and shall be performed so as to maintain the continuity of the lining and its serviceability.

III-5.5.2 Flaring of Nonmetallic Linings

(A) General. The provisions of this paragraph apply to metallic pipe lined with plastic or other flexible material. To prevent the fluid from contacting the metallic piping where the lining must be interrupted at a field installed flanged joint, the metal piping is trimmed so that the end of the lining projects beyond the face of the flange. The projecting lining is then flared back so that

Copyright ASME International
Provided by IHS under license with ASME
No reproduction or networking permitted without license from IHS
Not for Resale

it covers a portion of the flange face, in a manner similar to a lap joint. When the flange is made up, the corresponding flared ends are pressed together, forming a seal.

(A.1) Paragraph III-5.5.2 applies only to the flaring of linings in pipe that has previously been lined with nonmetals.

(A.2) Flaring which conforms to para. III-5.5.2 may be used in accordance with para. III-2.4.8(B).

(A.3) Flaring shall be performed only in accordance with a written flaring procedure specifcation, and only by qualified operators who have appropriate training or experience in the use of the applicable flaring procedures.

III-6.0 EXAMINATION, INSPECTION, AND TESTING

III-6.1 General

The general requirements of Chapter VI with regard to visual examination and leak testing are basically applicable to nonmetallic piping systems.

III-6.2 Examination and Inspection

III-6.2.1 Visual Examination

(A) Visual examination is observation of the portion of components, joints, and other piping elements that are or can be exposed to view before, during, or after manufacture, fabrication, assembly, erection, inspection, or testing.

(B) Visual examination shall be performed in accordance with Article 9, Section V of the ASME Boiler and Pressure Vessel Code.

III-6.2.2 Examination Required

(A) Piping shall be examined at least to the extent required herein, or to any greater extent specified in the engineering design.

(A.1) Visually examine at least 5% of fabrication. For bonds (joints) each bonder or bonding operator's work shall be represented and shall include each type of bond for each bonder or bonding operator.

(A.2) Visually examine 100% of fabrication for bonds, other than circumferential bonds, and other than those in components made to material specifications recognized in this Code.

(A.3) Perform a random visual examination of the assembly of threaded, bolted, and other joints to satisfy the inspector that these conform to the requirements of para. III-5.4.1

(A.4) Perform a random visual examination during erection of piping, including checking of alignment and supports.

(A.5) Examine erected piping for evidence of damage that would require repair or replacement and for other deviations from the design.

(B) The inspector shall be assured, by examination of certifications, records, or other evidence that the materials and components are of the specified grades and that they have received the required examination and testing.

III-6.2.3 Extent of Required Examination. When visual examination reveals a defect requiring repair

(A) Two additional examinations of the same type shall be made of the same kind of item (if of a bond, others by the same bonder or bonding operator).

(B) If the additional items examined as required by (A) above are acceptable, the item requiring repair shall be replaced or repaired and reexamined to meet the requirements of the Code, and all items represented by this additional examination shall be accepted.

(C) If either of the items examined as required by (A) above reveals a defect, two additional items shall be examined.

(D) If the additional items examined as required by (C) above are acceptable, the items requiring repair shall be replaced or repaired and reexamined to meet the requirements of the Code, and all items represented by this additional examination shall be accepted.

(E) If either of the additional items examined as required by (C) above reveals a defect, all comparable items shall be replaced or they shall be fully examined, and all items requiring repair shall be repaired and reexamined to meet the requirements of the Code.

III-6.3 Pressure Tests

Leak tests, when specified, shall be performed in accordance with para. 137.

Copyright ASME International
Provided by IHS under license with ASME
No reproduction or networking permitted without license from IHS Not for Resale

NONMANDATORY APPENDIX IV
CORROSION CONTROL FOR ASME B31.1 POWER PIPING SYSTEMS[1]

FOREWORD

Present Code rules apply to the design, materials, fabrication, erection, tests, and inspection of new piping systems normally termed "new construction."

This nonmandatory Appendix contains guidelines that are applicable to existing operating piping systems contained in the scope of ASME B31.1, as well as "new construction."

Minimum requirements for corrosion control of power piping systems are outlined herein. It is recognized that many sound, although perhaps diverse, corrosion control programs exist. The philosophy used has been to establish minimum requirements. Users are encouraged to augment these guidelines to suit their particular needs and to offer constructive criticism to the Committee on this Appendix.

IV-1.0 GENERAL

IV-1.1

External and internal corrosion should be prevented or controlled consistent with design requirements and the environment in which the system is located.

IV-1.2

Application of corrosion control requires a significant amount of competent judgment. NACE[2] RP-01-69, Recommended Practice-Control of External Corrosion on Underground or Submerged Metallic Piping Systems, and RP-01-75, Recommended Practice-Control of Internal Corrosion in Steam Pipelines and Piping Systems, provide a guide for establishing the minimum requirements for control of corrosion of underground or submerged metallic piping systems. In addition, ASME B31G, Manual for Determining the Remaining Strength of Corroded Pipelines [3] may provide additional guidance.

IV-1.3

The following minimum requirements and procedures should be provided for protection of all piping systems containing hazardous liquids or gases and other piping as specified by the owner against internal, external, and atmospheric corrosion.

IV-2.0 EXTERNAL CORROSION CONTROL FOR BURIED OR SUBMERGED PIPELINES

IV-2.1 General

IV-2.1.1 Means to prevent or mitigate external corrosion of buried or submerged piping systems should be considered in the initial design, unless it can be demonstrated by tests, investigations, or experience in the area of installation that a detrimental corrosive environment does not exist.

IV-2.1.2 A means for control of external corrosion of buried or submerged pipe and components may be accomplished through application of an effective protective coating or wrapping. This method of corrosion control can be supplemented with cathodic protection such as sacrificial anodes, rectifier-ground bed units, and suitable drainage bonds in stray current areas. Materials should be selected with due regard to the type of supplemental corrosion protection employed.

IV-2.2 Protective Coating

IV-2.2.1 Protective coatings applied for the purpose of external corrosion should

(A) be applied on a properly prepared surface

(B) mitigate corrosion

(C) have sufficient adhesion to the metal surface and be free of voids so as to effectively resist underfilm migration of moisture

(D) be sufficiently ductile to resist cracking

(E) have sufficient strength to resist damage due to handling and soil stress

(F) be impact resistant

IV-2.2.2 Coatings should have low moisture absorption characteristics and provide high electrical resistance. Properly compounded concrete coatings may be used.

IV-2.2.3 Pipe coatings should be inspected visually with a holiday detector and thickness gage prior to backfilling the excavation. Any bare spots, thin areas, holidays, or other damage to the coating should be repaired and reexamined prior to backfilling.

[1] Nonmandatory Appendices are identified by a Roman numeral; mandatory Appendices are identified by a letter. Therefore, Roman numeral I is not used in order to avoid confusion with the letter I.

[2] NACE: National Association of Corrosion Engineers (NACE International), P.O. Box 201009, Houston, Texas 77217-1009

Copyright ASME International
Provided by IHS under license with ASME
No reproduction or networking permitted without license from IHS
Not for Resale

IV-2.2.4 Precautions should be taken to minimize pipe coating damage during installation if coated pipe is installed by boring, driving, or similar method.

IV-2.2.5 Pipe coatings should be protected from damage resulting from adverse ditch conditions or damage from supporting blocks. Only fine grain backfill is permitted in contact with the coating. This fine grain layer should be continuous and of sufficient thickness to prevent coating damage from larger articles in the backfill.

IV-2.2.6 The backfilling operation should be carefully controlled to prevent damage to pipe coatings.

IV-2.3 Cathodic Protection System

IV-2.3.1 Unless it can be demonstrated by investigation, tests, or experience that cathodic protection is not needed, a cathodic protection system should be installed for all new buried carbon steel, alloy, ductile iron, cast iron, aluminum or other metallic piping.

IV-2.3.2 All cathodic protection systems should comply with one or more of the criteria contained in Section 6 of the latest issue of the NACE Standard RP-01-69.

IV-2.3.3 Cathodic protection current should be controlled so as to prevent damage to the protective coating, pipe, or components.

IV-2.4 Electrical Isolation

IV-2.4.1 Buried or submerged coated and uncoated piping systems should be electrically isolated at all interconnections with neighboring systems except where arrangements are made for mutual cathodic protection or where underground metallic structures are electrically interconnected and cathodically protected as a unit. Electrical isolation of dissimilar metals, i.e., steel pipe connected to aluminum tanks, should be provided.

IV-2.4.2 Grounding of all piping systems, where required, should be in accordance with IEEE[3] Standard 142 or acceptable alternate standards.

IV-2.4.3 The electrical continuity of all buried or submerged metallic piping systems is recommended for proper station grounding, and to facilitate the installation of cathodic protection. Continuity across all mechanical joints should be achieved by electrical bonding.

IV-2.4.4 Where piping systems are located near electrical transmission tower footings, ground cables, ground rods, or in other areas where fault currents or unusual risk of lightning may be anticipated, piping should be provided with protection against damage which may result from fault currents or lightning. Protective measures should also be taken at insulating devices where used.

IV-2.4.5 If a pipe culvert or sleeve is used, the encased pipe should be independently supported outside each end of the sleeve and electrically insulated throughout the length of the section.

IV-2.5 Electrical Interference

IV-2.5.1 The possibility of external corrosion induced by stray electrical currents in the earth is recognized. These stray currents are generated by sources independent of the piping system, and are more predominant in highly industrialized areas, mining regions, and locales containing high voltage, direct current, electrical power ground beds. Neighbor company pipeline cathodic protection systems are also a common source of stray earth currents.

IV-2.5.2 The protection of the piping system against stray current induced corrosion should be provided by metallic bonds, increased electrical cathodic protection, supplemental protective coatings, or insulating flanges.

IV-2.5.3 Each cathodic protection system provided for the plant piping should be designed and installed so as to minimize any adverse effects on adjacent underground metallic structures.

IV-3.0 INTERNAL CORROSION CONTROL

IV-3.1

Internal corrosion might occur during operation. A liquid or gas which will corrode the internal surfaces of piping should not be transported unless its corrosive effects have been investigated. The piping material and any lining should be selected to be compatible with the flowing fluid to minimize corrosion, in accordance with NACE Standard RP-01-75.

IV-3.2 Inhibitors

If inhibitors are used to control internal corrosion, sufficient coupon samples or other types of monitoring techniques should be utilized to determine adequately the effectiveness of the inhibitors.

IV-3.3 Linings

If linings are used to prevent corrosion, they should meet the quality specifications established by the design engineer. They should be inspected in accordance with industry recommended practices. All base material and weld metal surfaces should be covered with the lining to at least the thickness specified by the designer.

IV-3.4 Precautions at Hydrotesting

Equipment fabricated from austenitic (300 series) and ferritic (400 series) stainless steels and requiring hydrostatic testing should be tested with deionized water,

[3] IEEE: Institute of Electrical and Electronics Engineers, 445 Hoes Lane, Piscataway, NJ 08854

Copyright ASME International
Provided by IHS under license with ASME
No reproduction or networking permitted without license from IHS Not for Resale

high purity steam condensate, or potable water, in decreasing order of preference.

NOTE: Potable water in this context follows U.S. practice, with 250 parts per million maximum chloride content, sanitized with chlorine or ozone.

After testing is completed, equipment should be thoroughly drained with all high point vents open during draining, and dried by air blowing, swabbing, or other appropriate means. If immediate draining and drying are not possible, hydrotest water should be circulated in the piping for at least one hour daily to reduce the possibility of pitting and microbiologically influenced corrosion.

IV-4.0 EXTERNAL CORROSION CONTROL FOR PIPING EXPOSED TO THE ATMOSPHERE

IV-4.1

Piping which is exposed to the atmosphere should be protected against external corrosion by use of corrosion resistant materials or by application of protective coatings or paints.

IV-5.0 MONITORING OF PIPE WALL THINNING DUE TO EROSION/CORROSION

IV-5.1 Definition

Erosion/corrosion (E/C) is a flow accelerated corrosion process which leads to loss of wall thickness in carbon or low alloy steel pipe exposed to water or wet steam. The parameters that affect the rate of metal loss include water or steam temperature, pH, oxygen content of the fluid, steam quality, flow velocity and piping layout, and the piping chromium, copper, and molybdenum content. This para., IV-5.0, does not apply to other wall thinning mechanisms, such as general corrosion, microbiologically influenced corrosion, or cavitation.

IV-5.2 Systems and Components Susceptible to Erosion/Corrosion

Erosion/corrosion has caused piping failures or severe wall thinning in the following systems:

(A) Feedwater, auxiliary feedwater
(B) Feedwater recirculation
(C) Condensate recirculation
(D) Blowdown
(E) Turbine crossaround/crossover
(F) Extraction steam
(G) Moisture separator reheater
(H) Feedwater heater drains, drips, and vents

Piping damage due to E/C is not limited to these systems and may occur in any system of carbon steel or low alloy piping that is exposed to water or wet steam and operates at a temperature greater than 200°F. System parameters and their effect on E/C rates are shown in Table IV-5.2.

Table IV-5.2

Parameter	E/C Rate Increases if Parameter Is
Fluid velocity	Higher (> 10 fps for water) (> 150 fps for steam)
Fluid pH level	Less than 9.2
Fluid oxygen content	Less than 30 ppb
Fluid temperature	200°F–450°F (water) 200°F–500°F (wet steam)
Steam quality	Less than 100 %
Component geometry	Such as to create more turbulence
Component alloy content of chromium, copper, and molybdenum	Lower

Typical piping components known to experience wall thinning due to E/C include elbows, tees, reducers, and closely coupled fittings. Piping downstream and upstream of these fittings and downstream of orifices and control valves is also susceptible.

IV-5.3 Methods of Detection

Detection of wall thinning due to E/C may be accomplished by a number of NDE techniques including visual, radiographic, ultrasonic, and other measurement methods. However, the most widely used method for detection of wall thinning caused by E/C is ultrasonic thickness examination. Current industry practice supports use of a repeatable grid pattern with identifiable reference points at grid intersections. Grid sizes should not be greater than $2\sqrt{rt_n}$, where r is the outside radius and t_n is the nominal wall thickness of the piping item, except that grid sizes need not be smaller than 1 in. and should not be larger than 6 in. Thickness readings should be recorded at the grid intersection points and the pipe between the grid points scanned for detection of local thinning. If unacceptable thinning is detected, additional readings should be made and recorded with a refined or expanded grid. If thinning is detected within the boundaries of a component grid, a refined grid should be defined within the component to further define the region of wear and provide locations for documentation of measurements. If unacceptable thinning is found at the boundary of a grid, the grid should be expanded in the direction of thinning until thickness readings become acceptable.

IV-5.4 Acceptance Standards

The Code-required wall thickness t_m of each component inspected shall be determined in accordance with para. 104 of the Code. The required wall thickness should include consideration of the minimum wall thickness

Copyright ASME International
Provided by IHS under license with ASME
No reproduction or networking permitted without license from IHS
Not for Resale

required to satisfy all of the stress requirements of para. 104.

A calculation of predicted wall thickness t_p at the next examination should be performed for all components with measured wall thickness less than 87.5% of nominal wall thickness t_n.

(A) All components with t_p at the next examination of less than t_m or 70% t_n, whichever is greater, should be identified. Additional examinations during the current inspection should be performed for

(A.1) equivalent piping items in other trains when the system containing the subject piping item consists of more than one train.

(A.2) additional components in the same system/pipeline which have been determined to be susceptible to E/C.

When (1) and (2) above reveal additional components which meet the criteria of (a)(1) above, this process should be repeated until no additional components meet the criteria.

(B) All components with predicted wall thickness at the next examination of less than or equal to the greater of t_m or $0.3t_n$ shall be repaired, replaced, or evaluated for acceptability for continued service. An acceptable evaluation procedure has been provided in [2] and [3] of para. IV-5.6.

IV-5.5 Repair/Replacement Procedures

Repair or replacement of piping components should be performed in accordance with Appendix V. Erosion rates for chrome-molybdenum alloys are significantly lower than carbon steels and virtually nonexistent for stainless steels. When replacement is chosen, consideration of the increased resistance of alloy steels to E/C should be included in the selection of the replacement component material. The use of backing rings, which can create areas of local turbulence which will promote E/C damage, should be avoided.

IV-5.6 References

[1] ASME Code Case N-480, Approved May 1, 1990.

[2] EPRI Report NP-5911M, "Acceptance Criteria for Structural Evaluation of Erosion/Corrosion Thinning in Carbon Steel Piping," July 1988.

[3] ASME B31G, Manual for Determining the Remaining Strength of Corroded Pipelines.

[4] NUREG-1344, "Erosion/Corrosion-Induced Pipe Wall Thinning in U. S. Nuclear Power Plants," April 1989.

[5] EPRI Report NP-3944, "Erosion/Corrosion in Nuclear Plant Steam Piping: Causes and Inspection Program Guidelines," April 1985.

Copyright ASME International
Provided by IHS under license with ASME
No reproduction or networking permitted without license from IHS
Not for Resale

NONMANDATORY APPENDIX V
RECOMMENDED PRACTICE FOR OPERATION, MAINTENANCE, AND MODIFICATION OF POWER PIPING SYSTEMS[1]

FOREWORD

The B31.1 Power Piping Code prescribes minimum requirements for the construction of power and auxiliary service piping within the scope of para. 100.1. The Code, however, does not provide rules or other requirements for a determination of optimum system function, effective plant operations, or other measures necessary to assure the useful life of piping systems. These concerns are the responsibility of the designer and, after construction turnover, the Operating Company personnel responsible for plant activities.

Past experience has shown that a need exists for the definition of acceptable plant practices for achieving both reliable service and a predictable life in the operation of power piping systems. This nonmandatory Appendix is intended to serve that purpose. For this objective, Appendix V is structured in three parts that recognize and address the following basic concepts.

operation: the design of a piping system is based on specified service requirements and operating limitations. Subsequent operation within these defined limits is assumed and, for some systems, will be important for an acceptable service life.

maintenance: the design of a piping system assumes that reasonable maintenance and plant service will be provided. The lack of this support will, in some cases, introduce an increasing degree of piping system life uncertainty.

modifications: future modifications of a piping system or its operational functions are not assumed in original design unless specified. Modifications must not invalidate the integrity of a piping system design.

The practices in Appendix V are recommended for all plants and systems within the scope of the Power Piping Code, both for new construction and for existing plants in operation. An acceptable implementation of these or equivalent practices will be beneficial for new systems. The application of these practices is recommended for power piping systems in operating plants.

The recommended practices in this Appendix define minimum requirements for establishing a program to accommodate the basic considerations for piping system operation, maintenance, service, modification, and component replacement.

A record-keeping program is prescribed that can serve as a point of reference for analyzing piping system distortions or potential failures. Such a program is intended to identify distortions or failures and assure compatibility between the materials and components of existing piping systems with those portions undergoing repair, replacement, or modification.

DEFINITIONS[2]

Code: ASME Code for Pressure Piping, ASME B31.1 Power Piping.

component: equipment, such as vessel, piping, pump, or valve, which are combined with other components to form a system.

critical piping systems: those piping systems which are part of the feedwater-steam circuit of a steam generating power plant, and all systems which operate under two-phase flow conditions. Critical piping systems include runs of piping and their supports, restraints, and root valves. Hazardous gases and liquids, at all pressure and temperature conditions, are also included herein. The Operating Company may, in its judgment, consider other piping systems as being critical in which case it may consider them as part of this definition.

examination: an element of inspection consisting of investigation of materials, components, supplies, or services to determine conformance to those specified requirements which can be determined by such investigation. Examination is usually nondestructive and includes simple physical manipulation, gaging, and measurement.

failure: that physical condition which renders a system, component, or support inoperable.

maintenance: actions required to assure reliable and continued operation of a power plant, including care, repair, and replacement of installed systems.

modification: a change in piping design or operation and accomplished in accordance with the requirements and limitations of the Code.

[1] Nonmandatory Appendices are identified by a Roman numeral; mandatory Appendices are identified by a letter. Therefore, Roman numeral I is not used in order to avoid confusion with the letter I.

[2] The definitions pertain specifically to this Appendix.

Copyright ASME International
Provided by IHS under license with ASME
No reproduction or networking permitted without license from IHS
Not for Resale

Operating Company: the Owner, user, or agent acting on behalf of the Owner who has the responsibility for performing the operations and maintenance functions on the piping systems within the scope of the Code.

procedure: a document that specifies or describes how an activity is to be performed. It may include methods to be employed, equipment or materials to be used, and sequences of operations.

qualification (personnel): demonstration of the abilities gained through training and/or experience that enable an individual to perform a required function.

renewal: that activity which discards an existing component and replaces it with new or existing spare materials of the same or better qualities as the original component.

repair: to restore the system or component to its designed operating condition as necessary to meet all Code requirements.

specification: a set of requirements to be satisfied by a product, material, or process, indicating, whenever appropriate, the procedure by means of which it may be determined whether the requirements given are satisfied.

V-1.0 GENERAL

V-1.1 Application

V-1.1.1 This Appendix recommends minimum requirements for programs to operate and maintain ASME B31.1 Power Piping systems and also for the repairs to these systems.

V-1.1.2 Local conditions and the location of piping systems (such as indoors, outdoors, in trenches, or buried) will have considerable bearing on the approach to any particular operating and maintenance procedure. Accordingly, the methods and procedures set forth herein serve as a general guide. The Operating Company is responsible for the inspection, testing, operation and maintenance of the piping system and shall have the responsibility for taking prudent action to deal with inherent plant conditions.

V-1.2 Conformance

V-1.2.1 When conformance with time periods for examination recommended in this document is impractical, an extension may be taken if an evaluation demonstrates that no safety hazard is present.

V-1.3 Requirements

V-1.3.1 This Appendix recommends that the following listed items be established and implemented:

(A) complete design and installation records of the "as built" large bore piping systems, including expansion joints, hangers, restraints, and other supporting components. The Operating Company shall define those sizes considered to be large bore pipe.

(B) records of operation and maintenance history.

(C) programs for periodic inspection and monitoring.

(D) procedures for reporting and analyzing failures.

(E) procedures for maintenance, repairs, and replacements.

(F) procedures for abandoning piping systems and for maintaining piping systems in and out-of-service condition.

(G) procedures for assuring that all personnel engaged in direct maintenance of such piping systems as defined in para. V-4.2.1(C) are qualified by training or experience for their tasks or work.

V-2.0 OPERATING AND MAINTENANCE PROGRAM

V-2.1

Each Operating Company shall develop an operating and maintenance program comprising a series of written procedures, keeping in mind that it is not possible to prescribe a single set of detailed operating and maintenance procedures applicable to all piping systems. The operating and maintenance procedures shall include: personnel qualifications as defined by the Operating Company, material history and records, and supplementary plans to be implemented in case of piping system failures.

V-2.2

Each plant should maintain and file the following documentation that exists for each unit:

(A) current piping drawings

(B) construction isometrics (or other drawings) that identify weld locations

(C) pipeline specifications covering material, outside diameter, and wall thickness

(D) flow diagrams

(E) support drawings

(F) support setting charts

(G) records of any piping system modifications

(H) material certification records

(I) records of operating events that exceed design criteria of the piping or supports

(J) valve data

(K) allowable reactions at piping connections to equipment

(L) welding procedures and records

V-3.0 REQUIREMENTS OF THE OPERATING, MAINTENANCE, AND MODIFICATION PROCEDURES

V-3.1

The Operating Company shall have procedures for the following:

Copyright ASME International
Provided by IHS under license with ASME
No reproduction or networking permitted without license from IHS Not for Resale

(A) to perform normal operating and maintenance work. These procedures shall include sufficiently detailed instructions for employees engaged in operating and maintaining the piping systems.

(B) to prescribe action required in the event of a piping system failure or malfunction that may jeopardize personnel safety, safe operation, or system shutdown. Procedures shall consider

(B.1) requirements defined for piping system operations and maintenance and should include failure conditions under which shutdown may be required. Procedures should include both the action required and the consequence of the action on related systems or subsystems.

(B.2) the designation of personnel responsible for the implementation of required action, and minimum requirements for the instruction, training, and qualification of these personnel.

(C) to periodically inspect and review changes in conditions affecting the safety of the piping system. These procedures shall provide for a system of reporting to a designated responsible person in order that corrective measures may be taken.

(D) to assure that modifications are designed and implemented by qualified personnel and in accordance with the provisions of the Code.

(E) to analyze failures to determine the cause and develop corrective action to minimize the probability of recurrence.

(F) to intentionally abandon unneeded piping systems, or portions thereof, and to maintain those which are out of service for extended periods of time as defined by the Operating Company.

(G) to ensure that instruction books and manuals are consulted in performing maintenance operations.

(H) to log, file, maintain, and update instruction books.

(I) to log operating and maintenance records.

(J) to periodically review and revise procedures as dictated by experience and changes in conditions.

V-4.0 PIPING AND PIPE SUPPORT MAINTENANCE PROGRAM AND PERSONNEL REQUIREMENTS

V-4.1 Maintenance Program

V-4.1.1 The maintenance program shall include the following listed features:

(A) a purpose for the program

(B) the frequency for performing all elements of maintenance and inspection listed in the program

(C) generic requirements as related to initial hanger positions at time of unit startup, changes and adjustments in hanger positions at periodic inspections, and review of manufacturer's instruction and maintenance manuals applicable to components included in the program

(D) updating and modification as may be desirable by reason of Code revisions and technological advances or other considerations

(E) steps to keep maintenance and inspection personnel aware of program revisions

V-4.2 Personnel

V-4.2.1 To the extent necessary for conformance with the maintenance program of the Operating Company, only qualified and trained personnel shall be utilized for the following:

(A) observation, measurement, and recording the position of piping systems and hanger readings

(B) adjustment of hangers and all other components of support and restraint systems

(C) repair and periodic maintenance routines including, but not limited to

(C.1) routine piping assembly, including welding of integral attachments

(C.2) mechanical repair of valves, traps, and similar types of piping specialty components, including packings

(C.3) removal and replacement of piping insulation

(C.4) lubrication of applicable piping and hanger components, such as valves and constant supports, maintenance of fluid levels in hydraulic restraints; and stroking of hydraulic and mechanical dynamic restraints (snubbers)

(C.5) routine surveillance for changing conditions including changes in position of piping and settings of piping hangers and shock suppressors (snubbers)

V-4.2.2 Review of records and failure reports and decisions concerning corrective actions or repairs should be carried out by or under the direction of a qualified piping engineer.

V-4.2.3 Welding and Heat Treatment Personnel

(A) Welders shall be qualified to approved welding procedures. Qualification of weld procedures and the qualification performance of the welder shall be in accord with the requirements of para. 127.5.

(B) Trained personnel shall perform preheat and postheat treatment operations as described in the requirements of para. 131.

V-4.2.4 Examination, Inspection, and Testing Personnel. Trained personnel shall perform nondestructive examinations (NDE), including visual inspections and leak tests (LT), all in accord with the requirements of para. 136.

V-5.0 MATERIAL HISTORY

V-5.1 Records

V-5.1.1 Records shall be maintained to the extent necessary to permit a meaningful failure analysis or

Copyright ASME International
Provided by IHS under license with ASME
No reproduction or networking permitted without license from IHS
Not for Resale

reconstruction of a prior condition should the need arise. These records may be limited to those systems identified as critical as defined herein.

V-5.1.2 The records listed below are recommended for inclusion in the materials history and, where possible, be traceable to specific components in a piping system.

(A) procurement documents including specifications

(B) original service date and operating conditions

(C) list of materials, both original and replacement, with system location and material specification

(D) physical and mechanical properties from material test reports (if available), including, the following as applicable:

(D.1) Manufacturer's Material Test Reports or Certificate of Conformance

(D.2) chemical analysis

(D.3) impact tests

(D.4) special processing, i.e., heat treatment, mechanical working, etc.

(E) wall thicknesses where available from construction or maintenance records, including design minimum wall requirements

(F) record of alterations or repairs

(G) nondestructive examination reports (including radiographs, if available)

(H) special coatings, linings, or other designs for corrosion or erosion resistance

(I) failure reports

V-5.2 Failure Reports

V-5.2.1 The Operating Company shall be responsible for investigating all material failures in critical piping systems. The cause for failure shall be established. A report of the results of this investigation shall be included in the material history file and shall, as a minimum, contain the following information:

(A) summary of design requirements

(B) record of operating and test experience of failed components

(C) any previous history of the component

(D) any special conditions (corrosion, extraordinary loads, thermal excursions, etc.) which may have contributed to failure

(E) conclusions as to cause

(F) recommendations for corrective actions to minimize recurrence

(G) corrective actions that were taken, including verification of satisfactory implementation

(H) corrective action details and recommendations, if any, for similar action in other piping systems

V-5.3 Restoration After Failure

V-5.3.1 Defective component(s) shall be repaired or replaced with comparable or upgraded materials permissible by this Code after evaluation of the failure and taking into account conclusions as to cause. Even when materials are replaced by same or upgraded items, a formal failure report should follow as in para. V-5.2.

V-5.3.2 Care shall be exercised when replacing system components to ensure no parts of the system are overstressed. The stresses in the repaired system shall be equal to or less than the original stresses unless analysis permits increased stresses. During the replacement of the component, the piping system should be temporarily supported or restrained on both sides of the component to be removed so as to maintain its as-found cold position until the component(s) is (are) installed. If the desired piping position cannot be maintained, an analysis shall be made to determine the reason for the problem. A new stress analysis may be necessary. Care shall be exercised when working on a system that has been subjected to self-springing or cold pull.

V-5.3.3 Weld preparations and fit-up of the weld joints shall meet the requirements of Chapter V.

V-5.3.4 Welding procedures and preheat/postheat treatments of the weld joints shall meet the minimum requirements of Chapter V.

V-5.4 Weld Records

V-5.4.1 Records shall be maintained for all welds in critical piping systems. These records shall include, but not be limited to, the following:

(A) original installation records, where available

(B) repair and modification welds including excavation location and depth

(C) welding procedures and qualification tests

(D) nondestructive examination reports

(E) heat treatment performed

V-5.5 Inspection Program for Materials With Adverse History

V-5.5.1 Materials that have been reported to the industry to exhibit an adverse performance under certain conditions shall be given special attention by the Operating Company through a program of planned examination and testing. This program shall include the development of procedures for repair or replacement of the material when the Operating Company determines that such action is necessary.

V-5.5.2 Methods of surveillance and analysis shall be determined by the Operating Company.

V-5.5.3 The frequency of the material inspection shall also consider the expected service life of the component.

V-5.6 Nondestructive Examination

V-5.6.1 Nondestructive examinations used to investigate any suspect materials or problem areas shall be in accordance with Chapter VI.

--`,,```,,,,````-`-`,,`,,`,`,,`---

Copyright ASME International
Provided by IHS under license with ASME
No reproduction or networking permitted without license from IHS Not for Resale

V-6.0 PIPING POSITION HISTORY

V-6.1 General

V-6.1.1 Movements of critical piping systems from their design locations shall be used to assess piping integrity. The Operating Company shall have a program requiring such movements be taken on a periodic basis along with a procedure precluding the unnecessary removal of insulation when measurements are taken; refer to para. V-6.3. Piping system movement records shall be maintained. The Operating Company shall evaluate the effects of position changes on the safety of the piping systems and shall take appropriate corrective action.

V-6.1.2 Although the Code recognizes that high temperature piping systems seldom return to their exact original positions after each heat cycle due to relaxation, critical piping systems as defined herein, must be maintained within the bounds of engineering evaluated limitations.

V-6.2 Visual Survey

V-6.2.1 The critical piping systems shall be observed visually, as frequently as deemed necessary, and any unusual conditions shall be brought to the attention of personnel as prescribed in procedures of para. V-3.1. Observations shall include determination of interferences with or from other piping or equipment, vibrations, and general condition of the supports, hangers, guides, anchors, supplementary steel, and attachments, etc..

V-6.3 Piping Position Markers

V-6.3.1 For the purpose of easily making periodic position determinations, it is recommended that permanent markings on critical piping systems be made by providing markings or pointers attached to piping components. The position of these markings or pointers should be noted and recorded with respect to stationary datum reference points.

V-6.3.2 Placement of pointers shall be such that personnel safety hazards are not created.

V-6.4 Hangers and Supports on Critical Piping Systems and Other Selected Systems

V-6.4.1 Hanger position scale readings of variable and constant support hangers shall be determined periodically. It is recommended that readings be obtained while the piping is in its fully hot position, and if practical, when the system is reasonably cool or cold sometime during the year as permitted by plant operation. Pipe temperature at time of reading hangers shall be recorded.

V-6.4.2 Variable and constant support hangers, vibration snubbers, shock suppressors, dampeners, slide supports and rigid rod hangers shall be maintained in accordance with the limits specified by the manufacturers and designers. Maintenance of these items shall include, but not necessarily be limited to, cleaning, lubrication and corrosion protection. All dynamic restraints (snubbers) should be stroked periodically.

V-6.5 Records on Critical Piping Systems and Other Selected Systems

V-6.5.1 Pipe location readings and travel scale readings of variable and constant support hangers shall be recorded on permanent log sheets in such a manner that will be simple to interpret. See Fig. V-6.5 for suggested hanger record data sheet. Records of settings of all hangers shall be made before the original commercial operation of the plant. Log sheets should be accompanied by a pipe support location plan or piping system drawing with hanger mark numbers clearly identified. In addition, records are to be maintained showing movements of or in expansion joints including records of hot and cold or operating and shutdown positions, particularly those not equipped with control rods or gimbals.

V-6.6 Recommendations

V-6.6.1 After complete examination of the records (para. V-6.5), recommendations for corrective actions needed shall be made by a piping engineer or a qualified responsible individual or organization. Repairs and/or modifications are to be carried out by qualified maintenance personnel for all of the following items:

(A) excessively corroded hangers and other support components

(B) broken springs or any hardware item which is part of the complete hanger or support assembly

(C) excessive piping vibration; valve operator shaking or movements

(D) piping interferences

(E) excessive piping deflection which may require the installation of spring units having a greater travel range

(F) pipe sagging which may require hanger adjustment or the reanalysis and redesign of the support system

(G) hanger unit riding at either the top or the bottom of the available travel

(H) need for adjustment of hanger load carrying capacity

(I) need for adjustments of hanger rods or turnbuckle for compensation of creep or relaxation of the piping

(J) loose or broken anchors

(K) inadequate clearances at guides

(L) inadequate safety valve vent clearances at outlet of safety valves

(M) any failed or deformed hanger, guide, U-bolt, anchor, snubber, or shock absorber, slide support, dampener, or supporting steel

Copyright ASME International
Provided by IHS under license with ASME
No reproduction or networking permitted without license from IHS
Not for Resale

Copyright ASME International
Provided by IHS under license with ASME
No reproduction or networking permitted without license from IHS

Company _____ System _____ Prepared by _____
Plant Name _____ Unit No. _____ Sheet _____ Of _____
Date _____

Hanger Mk. No.	Hanger Size [Note (1)]	Hanger Type [Note (2)]	Dsgn. Mvt.	Constant Support Hanger Data		Rigid & Variable Support Data		Design Elev. Cold [Note (3)], ft.-in.	Hanger Scale Reading [Note (4)]							
									Date:		Date:		Date:		Date:	
				Design Load, lb	Design Total Travel	Design Load, lb		(4)	Cold	Read by	Hot	Read by	Cold	Read by	Hot	Read by
						H	C									

NOTES:
(1) Hanger size to be taken from hanger fabrication drawing.
(2) For constant support and variable support types indicate by CS or VS. For rigid, anchor, guide, sliding, or other type support, indicate by letter R, A, G, or S, respectively.
(3) Elevation of center line of pipe after cold springing and final hanger settings with line cold.
(4) “0” indicated the highest scale position with “5” being the midpoint, and “10” being the lowest scale position.

Fig. V-6.5 Hanger Record Sheet

Not for Resale

(N) unacceptable movements in expansion joints
(O) low fluid levels in hydraulic pipe restraints

V-7.0 PIPING CORROSION

V-7.1 General

V-7.1.1 This section pertains to the requirements for inspection of critical piping systems that may be subject to internal or external corrosion-erosion, such as buried pipe, piping in a corrosive atmosphere, or piping having corrosive or erosive contents. Requirements for inspection of piping systems in order to detect wall thinning of piping and piping components due to erosion/corrosion, or flow-assisted corrosion, is also included. Erosion/corrosion of carbon steel piping may occur at locations where high fluid velocity exists adjacent to the metal surface, either due to high velocity or the presence of some flow discontinuity (elbow, reducer, expander, tee, control valve, etc.) causing high levels of local turbulence. The erosion/corrosion process may be associated with wet steam or high purity, low oxygen content water systems. Damage may occur under both single and two-phase flow conditions. Piping systems that may be damaged by erosion/corrosion include, but are not limited to, feedwater, condensate, heater drains, and wet steam extraction lines. Maintenance of corrosion control equipment and devices is also part of this section. Measures in addition to those listed herein may be required.

V-7.1.2 Where corrosion is cited in this section, it is to be construed to include any mechanism of corrosion and/or erosion. Recommended methods for monitoring and detection, acceptance standards, and repair/replacement procedures for piping components subjected to various erosion/corrosion mechanisms, including flow-assisted corrosion, are provided in nonmandatory Appendix IV.

V-7.1.3 Guidance for the evaluation and monitoring of carbon steel piping susceptible to erosion/corrosion (flow assisted corrosion) is provided in Appendix IV, para. IV-5.0.

V-7.2 Procedures

V-7.2.1 The Operating Company shall establish procedures to cover the requirements of this paragraph.

V-7.2.2 Procedures shall be carried out by or under the direction of persons qualified by training or experience in corrosion control and evaluation of piping systems for corrosion damage.

V-7.2.3 Procedures for corrosion control shall include, but not be limited to the following:

(A) maintenance painting to resist external ambient conditions

(B) coating and/or wrapping for external protection of buried or submerged systems

(C) lining to resist internal corrosion from system fluid when applicable

(D) determining the amount of corrosion or erosion of the piping system internals caused by the flowing fluid

(E) determining the amount of external corrosion caused by ambient conditions, such as atmosphere, buried in soil, installed in tunnels or covered trenches, and submerged underwater

(F) preparing records which shall include all known leakage information, type of repair made, location of cathodically protected pipe, and the locations of cathodic protection facilities including anodes

(G) examining records from previous inspection and performing additional inspections where needed for historical records

V-7.3 Records

V-7.3.1 Tests, surveys, and inspection records to indicate the adequacy of corrosion control shall be maintained for the service life of the piping system. This should include records of measured wall thickness and rates of corrosion.

V-7.3.2 Inspection and maintenance records of cathodic protection systems shall be maintained for the service life of the protected piping.

V-7.3.3 Observations of the evidence of corrosion found during maintenance or revision to a piping system shall be recorded.

V-7.4 Examination of Records

V-7.4.1 Records shall be examined and evaluated by trained personnel.

V-7.4.2 Where inspections or leakage history indicate that active corrosion is taking place to the extent that a safety hazard is likely to result, applicable portions of the system shall be replaced with corrosion resistant materials or with materials which are protected from corrosion, or other suitable modifications shall be made.

V-7.5 Frequency of Examination

V-7.5.1 Within 3 years after original installation, each piping system shall be examined for evidence of corrosion in accordance with the requirements established by the Operating Company's procedures. Piping in severe service or environmental conditions should be inspected initially within a time frame commensurate with the severity of the service or environment. Corrective measures shall be taken if corrosion is above the amount allowed for in the original design.

V-7.5.2 Continued examination shall be made at intervals based upon the results of the initial inspection, but not to exceed 5 years, with corrective measures being taken each time that active corrosion is found.

Copyright ASME International
Provided by IHS under license with ASME
No reproduction or networking permitted without license from IHS
Not for Resale

V-7.5.3 Examination for evidence of internal corrosion shall be made by one of the following:

(A) drilled hole with subsequent plugging

(B) ultrasonic test for wall thickness determination

(C) removal of representative pipe section at flange connections or couplings

(D) removal of short section of pipe

(E) radiography for evidence of wall thinning

(F) borescope or videoprobe examination

(G) a method equivalent to those above

V-7.5.4 Examinations for evidence of external corrosion shall be made after removal of covering, insulation or soil on a representative short section of the piping system taking into consideration varying soil conditions.

V-8.0 PIPING ADDITION TO EXISTING PLANTS

V-8.1 Piping Classification

V-8.1.1 Piping and piping components which are replaced, modified, or added to existing piping systems are to conform to the edition and addenda of the Code used for design and construction of the original systems, or to later Code editions or addenda as determined by the Operating Company. Any additional piping systems installed in existing plants shall be considered as new piping and shall conform to the latest issue of the Code.

V-8.2 Duplicate Components

V-8.2.1 Duplicates of original components and materials are permitted for permanent replacements, provided the renewal is a result of reasonable wear and not the result of the improper application of the material, such as temperature and corrosive environment.

V-8.3 Replacement Piping and Piping Components

V-8.3.1 Where replacement components differ from the original components with respect to weight, dimensions, layout, or material, the design of the affected piping system shall be rechecked for the following design considerations.

(A) Hangers and supports shall be adequate for additional or altered distribution of weight. They shall accommodate the flexibility characteristics of the altered piping system.

(B) Changes in stresses imposed on both existing and replacement components of the piping shall be evaluated and compensation shall be made to prevent overstress in any part of the entire altered piping system.

V-9.0 SAFETY, SAFETY RELIEF, AND RELIEF VALVES

V-9.1 General

V-9.1.1 This section is applicable to safety, safety relief, and relief valve installations (see Appendix II for definitions of these terms.) Except as otherwise noted, all reference to "safety" valve(s) shall be considered to include all three types. Safety valves shall be maintained in good working condition. Also, discharge pipes and their supports shall be inspected routinely and maintained properly. Any evidence of blowback at the drip pan of open safety valve vent systems should be noted and its cause determined and corrected.

V-9.2 Testing and Adjustment

V-9.2.1 Testing of safety valves for pressure setting shall be in accordance with written procedures which incorporate the requirements of regulatory agencies and manufacturer's instructions. Testing should be performed just prior to a planned outage so that any required repair or maintenance, except spring and blowdown ring adjustments, can be performed during the outage, thereby assuring tight valves upon return to service.

V-9.2.2 The setting or adjustment of safety valves shall be done by personnel trained in the operation and maintenance of such valves. Safety valves shall be tested after any change in setting of the spring or blowdown ring. Appropriate seals should be used to assure that there is no unauthorized tampering with valve settings. Repairs to safety valves and disassembly, reassembly, and/or adjustments affecting the pressure relief valve function, which are considered a repair, should be performed by an authorized repair organization.[3]

V-9.3 Operation

V-9.3.1 The precautions stated in the manufacturer's operating manual or instruction books shall be followed when operating safety valves. In general, these precautions will include the following:

(A) Hand lifting is permitted. Assistance, as required, may be accomplished by the use of small wires or chains.

(B) Striking or hammering the valve body shall not be permitted. Only the hand-test lever shall be used.

(C) Attempts to stop leakage through the valve seat shall not be made by compressing the spring.

V-10.0 DYNAMIC LOADING

V-10.1 Water Hammer

V-10.1.1 Water hammer includes any water or other liquid transient event such as pressure surge or impact loading resulting from sudden or momentary change in flow or flow direction.

[3] Examples of organizations that may be authorized by the owner, or by the local jurisdiction, to perform repairs on safety valves include but are not limited to the original valve manufacturer or a repair organization that holds a National Board of Boiler and Pressure Vessel Inspectors (NB-23) VR stamp.

Copyright ASME International
Provided by IHS under license with ASME
No reproduction or networking permitted without license from IHS
Not for Resale

V-10.1.2 Should significant water hammer develop during plant operation, the cause should be determined and corrective action taken. Water hammer could be the result of an incorrectly sloped pipe intended for steam condensate drainage. Water hammer in piping systems may cause damage to hangers, valves, instrumentation, expansion joints, piping and equipment integral with the piping. The Operating Company should develop procedures to deter water hammer and to determine when corrective action is necessary.

V-10.1.3 Water hammer problems resulting from accumulated condensate in a steam line cannot be solved simply by adding restraints. Corrective action may include changing line slopes, adding drain pots, adding warm-up lines around valves, checking for leaking desuperheaters, faulty electrical controls on automatic drains, etc.

V-10.1.4 Water hammer due to column separation in feedwater or booster pump suction piping results when the deaerator pegging pressure is not maintained. This type of water hammer can be particularly severe and requires prompt attention to control and reduce it.

V-10.1.5 As a priority, corrective action should address the cause of waterhammer first. If such corrective action is ineffective in reducing the effects of water hammer to acceptable levels, installation of restraints may be necessary to limit piping displacements and/or damage from fatigue.

V-10.2 Steam Hammer

V-10.2.1 Dynamic loads due to rapid changes in flow conditions and fluid state in a steam piping system are generally called steam hammer loads. Piping response to these momentary unbalanced loads can be significant in high pressure steam systems, such as main steam, hot and cold reheat steam, bypass and auxiliary steam systems that are subject to rapid interruption or establishment of full steam flow.

V-10.2.2 The Operating Company should develop procedures to determine any adverse effects of steam hammer, such as excessive pipe movement, damage to hangers and restraints, and high pipe stress and reactions at pipe connections to equipment. Where such movements, stresses, and reactions exceed safe limits or allowable loadings, a program of remedial action should be implemented.

V-11.0 HIGH-TEMPERATURE CREEP

V-11.1 General

V-11.1.1 Catastrophic failure, including rupture, can occur due to excessive creep strains resulting from operation of the piping above design pressure, or temperatures, or both, for extended periods of time. The expected life of a piping system operating in the creep range can be reduced significantly through prolonged exposure to pressure or temperature, particularly temperature, above design values. Paragraph 102.2.4 provides criteria for occasional short operating periods at higher than design pressure or temperature.

V-11.1.2 This section provides the minimum requirements for evaluating critical piping systems in order to detect creep damage and to assist in predicting the remaining life under expected operating conditions. The remaining useful life may be estimated by determining the extent of creep damage sustained by the pipe.

V-11.2 Procedures

V-11.2.1 The Operating Company shall establish procedures to cover the requirements of this paragraph.

V-11.2.2 The procedures shall be carried out by or under the direction of persons qualified by training or experience in metallurgical evaluation of high temperature creep effects in power plant piping.

V-11.2.3 An evaluation program to determine the extent of creep damage and estimate remaining life of high temperature piping shall be carried out in three phases, as follows:

(A) review of material specifications, design stress levels, and operating history.

(B) indirect measurements to determine extent of creep damage. These would include diametral measurements to detect creep swelling. In addition, dye penetrant, magnetic particle, ultrasonic, and radiographic methods may be used to detect internal and surface cracks.

(C) examination of the microstructure to determine the degree of material degradation. This can be performed by replication techniques or by metallography using specimens obtained by boat-sampling or trepanning.

V-11.3 Records

V-11.3.1 Records of creep damage evaluation survey findings shall be maintained for the service life of high temperature piping systems operating in the creep range.

V-11.4 Examination of Records

V-11.4.1 Records of creep damage surveys and test reports shall be examined by personnel qualified by training and experience to evaluate and interpret NDE and metallographical studies.

V-11.4.2 Where surveys and inspections of critical piping systems indicate that high temperature creep damage has progressed to an unacceptable level, affected portions of the piping system shall be replaced.

V-11.5 Frequency of Examination

V-11.5.1 Periodically, all critical piping systems operating within the creep range shall be examined for

Copyright ASME International
Provided by IHS under license with ASME
No reproduction or networking permitted without license from IHS Not for Resale

evidence of high temperature creep damage. Particular attention shall be given to welds.

V-11.5.2 The examination shall be repeated at periodic intervals which shall be established on the basis of earlier survey findings, operating history, and severity of service.

V-12.0 RERATING PIPING SYSTEMS

V-12.1 Conditions

V-12.1.1 An existing piping system may be rerated for use at a higher pressure and/or temperature if all of the following conditions are met:

(A) A design analysis shall be performed to demonstrate that the piping system meets the requirements of the Code at the new design conditions.

(B) The condition of the piping system and support/restraint scheme shall be determined by field inspections and the examination of maintenance records, manufacturer's certifications, and/or other available information to ensure conformance with the Code requirements for the new design conditions.

(C) Necessary repairs, replacements, or alterations to the piping system are made to conform with the requirements prescribed in (A) and (B) above.

(D) The system has been leak tested to a pressure equal to or greater than that required by the Code for a new piping system at the new design conditions.

(E) The rate of pressure and temperature increase to the higher maximum allowable operating conditions shall be gradual so as to allow sufficient time for periodic observations of the piping system movements and leak tightness.

(F) Records of investigations, work performed, and pressure tests conducted in rerating the piping systems shall be preserved for the service life of the piping systems.

(G) All safety valves, relief valves, and other pressure relieving devices must be examined, and recertified for the new pressure/temperature design conditions. Capacity of relieving equipment shall be investigated if the design pressure and/or temperature are changed in rerating a piping system.

Copyright ASME International
Provided by IHS under license with ASME
No reproduction or networking permitted without license from IHS Not for Resale

NONMANDATORY APPENDIX VI
APPROVAL OF NEW MATERIALS[1]

The ASME B31.1 Committee considers requests for adoption of new materials desired by the owner/user or fabricator, manufacturer, installer, assembler of piping or piping components constructed to the Code. In order for the material to receive proper consideration, information and data are required to properly categorize the material. In general this information and data include, but are not necessarily limited to the following:

(A) the chemical composition of the material including those elements that establish the characteristics and behavior of the material.

(B) the mechanical properties of the material, including tensile test data, ductility data, and other special mechanical test data, which will assist the Committee in its review of the material and its application.

(B.1) tensile test data (per ASTM E 21), including both ultimate tensile strength and yield strength, at room temperature and at 100°F or 50°C intervals to a temperature at least 100°F higher than the intended use of the material.

(B.2) when creep properties are expected to limit the allowable stress, creep and creep rupture data at temperature intervals of 100°F or 50°C are also required. Such data should be for four or more time intervals, one of which should be longer than 2,000 hr but less than 6,000 hr, and one of which should be longer than 6,000 hr.

(C) if the material is to be used in welded construction, data from actual welding tests made in accordance with Section IX of the ASME Boiler and Pressure Vessel Code should be submitted. Welding test data should include

(C.1) the welding processes and weld filler metal(s) intended for the fabrication of the material.

(C.2) all-weld-metal tensile test data for temperatures representative of intended service.

(C.3) any special restrictions on the welding of the material.

(C.4) the appropriate preheat and postweld heat treatment, if any, which will be given the material. If postweld heat treatment results in embrittlement of the material, the significance of such treatments with substantiating data should be forwarded. Toughness data on weld metal and heat affected zone in the as-welded and postweld heat treated conditions, when appropriate, should be submitted.

(D) where the material is intended for special applications, requires special handling or special welding procedures, or has known limitations or susceptibility to failure in certain services, precautionary requirements and information should also be submitted for review by the Committee.

(E) applicable product form(s) of the material, such as sheet, strip, plate, bars, shapes, seamless or welded pipe or tube forgings, castings, etc., for which application is to be considered must be identified.

The general data recommended should be submitted on a minimum of three heats, preferably commercial heats, of the material. Where the range of chemical composition affects the mechanical properties, the heats selected should cover both the high and low range of the effective chemical elements to show the effect on the mechanical properties. Any special heat treatment, whether applied by the material supplier or the fabricator, should be applied to the test pieces used to obtain the data.

If the material is covered by an ASTM specification, the specification number(s) and grade(s) involved must be identified in the application. If the material is not covered by an ASTM specification, application must be made to ASTM for specification coverage of this material.

Should there be a need for Code use prior to the inclusion of the material in ASTM specifications, the Committee will consider issuing a Code Case.

In addition to the information and data noted above, the Committee should be provided with an indication of user need, a copy of the letter to ASTM requesting specification coverage, and sufficient information for the Committee to modify an appropriate existing ASTM specification to establish the material specification requirements for the material product form.

When the new material is a minor modification of a material which is currently accepted by the Code, the data required may be reduced with the concurrence of the Committee. When the data supplied are insufficient for an adequate evaluation, the Committee will request additional data. Such requests will be returned, indicating those areas in which additional information is required.

[1] Nonmandatory appendices are identified by a roman numeral; mandatory appendices are identified by a letter. Therefore, roman numeral I is not used in order to avoid confusion with the letter I.

Copyright ASME International
Provided by IHS under license with ASME
No reproduction or networking permitted without license from IHS
Not for Resale

NONMANDATORY APPENDIX VII
PROCEDURES FOR THE DESIGN OF RESTRAINED UNDERGROUND PIPING[1]

FOREWORD

The Code contains rules governing the design, fabrication, materials, erection, and examination of power piping systems. Experience over the years has demonstrated that these rules may be conservatively applied to the design and analysis of buried piping systems. However, the ASME B31.1 rules were written for piping suspended in open space, with the supports located at local points on the pipe. Buried piping, on the other hand, is supported, confined, and restrained continuously by the passive effects of the backfill and the trench bedding. The effects of continuous restraint cannot be easily evaluated by the usual methods applied to exposed piping, since these methods cannot easily accommodate the effects of bearing and friction at the pipe/soil interface. Accordingly, this Appendix has been prepared to illustrate and clarify the application of Code rules to restrained buried piping.

All components in the buried piping system must be given consideration, including the building penetrations, branches, bends, elbows, flanges, valves, grade penetrations, and tank attachments. It is assumed that welds are made in accordance with this Code and that appropriate corrosion protection procedures are followed for buried piping.

This Appendix provides analytic and nomenclature definition figures to assist the designer, and is not intended to provide actual design layout. Sample calculations for various configurations of semirigid buried piping have been provided at the end of the text to assist the designer in the application of these procedures.

VII-1.0 SCOPE AND DEFINITIONS

VII-1.1 Scope

The scope of this Appendix is confined to the design of buried piping as defined in para. VII-1.2. Thermal expansion in buried piping affects the forces, the resulting bending moments and stresses throughout the burried portions of the system, particularly at the anchors, building penetrations, buried elbows and bends, and branch connections, and it is the designer's responsibility to consider these forces. This Appendix, however, deals only with the buried portions of the system, and not the complete system.

The design and analysis of buried piping requires that careful attention be paid to

(A) all loads acting on the system

(B) the forces and the bending moments in the piping and piping components resulting from the loads

(C) the loading and stress criteria

(D) general design practices

VII-1.2 Definitions

confining pressure: the pressure imposed by the compacted backfill and overburden on a buried pipe. Confining pressure is assumed to act normal to the pipe circumference.

flexible coupling: a piping component that permits a small amount of axial or angular movement while maintaining the pressure boundary.

friction: the passive resistance of soil to axial movement. Friction at the pipe/soil interface is a function of confining pressure and the coefficient of friction between the pipe and the backfill material. Friction forces exist only where there is actual or impending slippage between the pipe and soil.

influence length: that portion of a transverse pipe run which is deflected or "influenced" by pipe thermal expansion along the axis of the longitudinal run.

modulus of subgrade reaction: the rate of change of soil bearing stress with respect to compressive deformation of the soil. It is used to calculate the passive spring rate of the soil

penetration: the point at which a buried pipe enters the soil either at grade or from a wall or discharge structure.

settlement: the changes in volume of soil under constant load which results in the downward movement, over a period of time, of a structure or vessel resting on the soil.

virtual anchor: a point or region along the axis of a buried pipe where there is no relative motion at the pipe/soil interface.

VII-1.3 Nomenclature

a, b, c = quadratic equation functions

A = cross sectional metal area of pipe, in.^{2}

[1] Nonmandatory appendices are identified by a roman numeral; mandatory appendices are identified by a letter. Therefore, roman numeral I is not used in order to avoid confusion with the letter I.

Copyright ASME International
Provided by IHS under license with ASME
No reproduction or networking permitted without license from IHS
Not for Resale

A_c = surfaced area of a 1-in. long pipe segment, in.[2]
B_d = trench width at grade, in.
C_D = soil bearing parameter from Table VII-3.2.3, dimensionless
C_k = horizontal stiffness factor for backfill [8],[2] dimensionless
D = pipe outside diameter, in.
dL = ment, in.[2]
length of pipe element, in.
E = Young's modulus for pipe, psi
f = soil bearing parameter from Table VII-unit friction force along pipe, lb/in.
f_{min}, f_{max} = minimum, maximum unit friction force on pipe, lb/in.
F_f = total friction force along effective length, lb
F_{max} = maximum axial force in pipe, lb
H = pipe depth below grade, in.
I = pipe section moment of inertia, in.[4]
k = soil modulus of subgrade reaction, psi
k_h = soil horizontal modulus of subgrade reaction, psi
$k_{i,j}$ = orthogonal soil springs on pipe, lb/in.
k_v = soil vertical modulus of subgrade reaction, psi
L_1 = length of transverse pipe run, in.
L_2 = length of longitudinal pipe run, in.
L_m = minimum slippage length of pipe, in.
L' = effective slippage length for short pipes, in.
L'' = effective slippage length for long pipes, in.
n = number of modeling elements for pipe springs, dimensionless
N_h = horizontal force factor [8], dimensionless
P = maximum operating pressure in pipe, psi
P_c = confining pressure of backfill on pipe, psi
S_A = allowable expansion stress range, psi
SE = expansion stress, psi
S_h = basic material allowable stress at T degrees fahrenheit, psi
t = pipe wall thickness, in.
T = maximum operating temperature, °F
T_o = ambient temperature of pipe, °F
w = soil density, pcf, pci
W_p = unit weight of pipe and contents, lb/in.
α = coefficient of thermal expansion of pipe, in./in./°F
β = pipe/soil system characteristic [2], in.$^{-1}$
ϵ = pipe unit thermal expansion, in./in.
μ = coefficient of friction, dimensionless
Ω = effective length parameter, in.

[2] Numbers enclosed in brackets [ ] correspond to references cited in VII-7.0.

VII-2.0 LOADS

VII-2.1 Thermal Expansion

Thermal displacements at the elbows, branch connections, and flanges in a buried piping system and the forces and moments resulting from the displacements may be determined by analyzing each buried run of pipe by the method described in this Appendix.

VII-2.1.1 Installations With Continuous Runs. For buried piping installations that contain continuous runs without flexible couplings, the passive restraining effects of soil bearing on the transverse legs at the ends of long runs subject to thermal expansion may be significant and result in high axial forces and elbow or branch connection bending moments.

VII-2.1.2 Installations With Flexible Couplings. For buried piping installations that incorporate flexible couplings into the pipe runs subject to thermal expansion, the bending moments and stresses may be substantially reduced. However, the flexible couplings must be chosen carefully to accommodate the thermal expansion in the pipe, and the friction forces or stiffness in the coupling must be considered.

VII-2.1.3 Installations With Penetration Anchors. For buried piping systems in which the building penetration provides complete restraint to the pipe, it is necessary to calculate the penetration reactions to thermal expansion in the initial buried run. If this run incorporates flexible couplings, piping reactions at the penetration resulting from unbalanced forces due to internal pressure must be considered.

VII-2.1.4 Installations With Flexible Penetrations. For buried piping systems in which the building penetrations permit some axial or angular movements, the interaction between the buried run outside the penetration and the point-supported portion of the system inside the building must be considered.

VII-2.2 Pressure

Pressure loads in buried piping are important for two primary reasons.

VII-2.2.1 In pipe runs which incorporate flexible couplings, there is no structural tie between the coupled ends, with the result that internal pressure loads must be reacted externally. External restraint may be provided by thrust blocks, external anchors, soil resistance to elbows or fittings at each end of the pipe run, or by control rods across the coupling. Where one or both of the ends terminate at a penetration or an anchor, or at connected equipment such as a pump or vessel, the

Copyright ASME International
Provided by IHS under license with ASME
No reproduction or networking permitted without license from IHS Not for Resale

pressure forces can be quite high and must be considered in the anchor or equipment design.

VII-2.2.2 For discharge strctures, the reaction forces due to upstream pressure and mass flow momentum in the discharge leg may be high and must be considered in the design of the last elbow or bend before the discharge.

VII-2.3 Earthquake

An earthquake subjects buried piping to axial loads and bending moments from soil strain due to seismic waves, or from ground faulting across the axis of the pipe. The seismic soil strain can be estimated for a design earthquake in a specific geographical region, from which design values for forces and moments in buried piping can be calculated. However, consideration of the magnitude and effects of seismic ground faulting on buried piping is beyond the scope of this Appendix.

VII-3.0 CALCULATIONS

The calculations for stresses in restrained underground piping are carried out in four steps, as follows.

VII-3.1 Assembling the Data

The pipe material and dimensions, soil characteristics, and operating conditions must be established.

VII-3.1.1 Pipe Data

(A) pipe outside diameter D, in.
(B) wall thickness t, in.
(C) length of pipe runs L_1 (transverse) and L_2 (longitudinal), in.
(D) Young's modulus E, psi, (from Appendix C)
(E) pipe depth below grade H, in.

VII-3.1.2 Soil Characteristics

(A) soil density w, pcf (from site tests)
(B) type of backfill
(C) pipe trench width at grade B_d, in.
(D) range of coefficient of friction μ between pipe and backfill

VII-3.1.3 Operating Conditions

(A) maximum operating pressure P, psi
(B) maximum pipe temperature T, °F
(C) ambient pipe temperature T_o, °F
(D) pipe coefficient of thermal expansion α, in./in./°F

VII-3.2 Calculations of Intermediate Parameters

The parameters specified in VII-3.2.1 through VII-3.2.6 must be calculated.

VII-3.2.1 Maximum Relative Strain *e* at the Pipe/Soil Interface, in./in. For thermal expansion, this is the unit thermal elongation of the unrestrained pipe.

$$\epsilon = \alpha(T - T_o) \quad (1)$$

where

α = coefficient of thermal expansion
$T - T_o$ = difference between operating and installation temperatures

VII-3.2.2 Modulus of Subgrade Reaction *k*, psi. This is a factor which defines the resistance of the soil or backfill to pipe movement due to the bearing pressure at the pipe/soil interface. Several methods for calculating k have been developed in recent years byAudibert and Nyman, Trautmann and O'Rourke, and others [4, 5, 6, 7, 8]. For example [8], for pipe movement horizontally, the modulus of subgrade k_h may be found by

$$k_h = C_k N_h w D \text{ psi} \quad (2)$$

where

C_k = a dimensionless factor for estimating horizontal stiffness of compacted backfill. C_k may be estimated at 20 for loose soil, 30 for medium soil, and 80 for dense or compacted soil.
w = soil density, lb/in.^{3}
D = pipe outside diameter, in.
N_h = a dimensionless horizontal force factor from Fig. 8 of [8]. For a typical value where the soil internal friction angle is 30 deg, the curve from [8] may be approximated by a straight line defined by

$$N_h = 0.285H/D + 4.3$$

where

H = the depth of pipe below grade at the pipe center line, in.

For pipe movement upward or downward,the procedures recommended in [4] may be applied. Conservatively, the resistance to upward movement may be considered the same as for horizontal movement with additional consideration for the weight of the soil. Resistance to downward movement may conservatively be considered as rigid for most expansion stress analysis.

VII-3.2.3 Unit Friction Force at the Pipe/Soil Interface *f*

$$f = \mu (P_c A_c + W_p) \text{ lb/in.} \quad (3)$$

where

μ = coefficient of friction between pipe and soil
P_c = confining pressure of soil on pipe, psi
A_c = surface area of a pipe segment, in.^{2}
W_p = unit weight of pipe and contents, lb/in.

For piping which is buried within 3 pipe diameters of the surface, confining pressure P_c may be estimated by

$$P_c = wH \text{ lb/in.}^2$$

Copyright ASME International
Provided by IHS under license with ASME
No reproduction or networking permitted without license from IHS Not for Resale

Table VII-3.2.3 Approximate Safe Working Values of C_D for Use in Modified Marston Formula

Ratio H/B_D	Damp Top Soil and Dry and Wet Sand	Saturated Top Soil	Damp Yellow Clay	Saturated Yellow Clay
0.5	0.46	0.47	0.47	0.48
1.0	0.85	0.86	0.88	0.90
1.5	1.18	1.21	1.25	1.27
2.0	1.47	1.51	1.56	1.62
2.5	1.70	1.77	1.83	1.91
3.0	1.90	1.99	2.08	2.19
3.5	2.08	2.18	2.28	2.43
4.0	2.22	2.35	2.47	2.65
4.5	2.34	2.49	2.53	2.85
5.0	2.45	2.61	2.19	3.02
5.5	2.54	2.72	2.90	3.18
6.0	2.61	2.91	3.01	3.32
6.5	2.68	2.89	3.11	3.44
7.0	2.73	2.95	3.19	3.55
7.5	2.78	3.01	3.27	3.65
8.0	2.82	3.06	3.33	3.74
9.0	2.88	3.14	3.44	3.89
10.0	2.92	3.20	3.52	4.01
11.0	2.95	3.25	3.59	4.11
12.0	2.97	3.28	3.63	4.19
13.0	2.99	3.31	3.67	4.25
14.0	3.00	3.33	3.70	4.30
15.0	3.01	3.34	3.72	4.34
∞	3.03	3.38	3.79	4.50

where

w = the soil density, lb/in.^{3}

H = the depth below grade, in.

For piping which is buried more than 3 pipe diameters below grade, confining pressure P_c is found by using the modified Marston equation [9]:

$$P_c = wC_DB_D \text{ lb/in.}^2$$

where

C_D = a dimensionless parameter obtained from Table VII-3.2.3

B_D = the trench width, with a maximum value of 24 in. plus the pipe diameter

VII-3.2.4 Pipe/Soil System Characteristic [2]

$$\beta = [k/(4EI)]^{1/4} \text{ in.}^{-1} \quad (4)$$

where

k = soil modulus of subgrade reaction k_h or k_v, psi

E = Young's modulus for pipe, psi

I = area moment of inertia for pipe, in.^{4}

VII-3.2.5 Minimum Slippage Length L_m [1]

$$L_m = \epsilon AE/f \text{ in.} \quad (5)$$

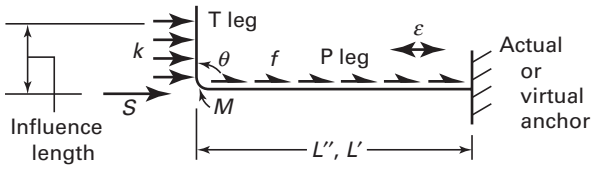

Fig. VII-3.3.2-1 Element Category A, Elbow or Bend

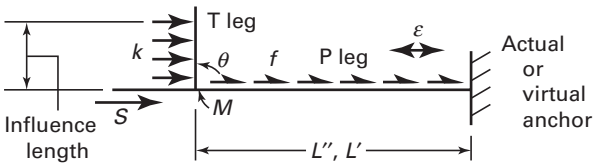

Fig. VII-3.3.2-2 Element Category B, Branch Pipe Joining the P Leg

where

A = pipe cross section area

VII-3.2.6 Maximum Axial Force F_{max} in the Longitudinal Pipe Run. The maximum axial force in a pipe long enough for friction force to develop to the point where a region of the pipe is totally restrained longitudinally by the soil is found by

$$F_{\max} = fL_m = \epsilon AE \text{ lb} \quad (6)$$

VII-3.3 Classification of the Pipe Runs

VII-3.3.1 Purpose. The classification and subclassification of the buried pipe elements is used in choosing the proper equation for effective slippage length L' or L'' which is then used in calculating piping forces and stresses. The pipe segment identified by the dimension L' or L'' always begins at either an elbow, bend, tee, or branch connection and terminates at the point (described below as the "virtual anchor") at which there is no slippage or relative movement at the pipe/soil interface.

VII-3.3.2 Classification of the Pipe Elements. It is in the bends, elbows, and branch connections that the highest stresses are found in buried piping subject to thermal expansion of the pipe. These stresses are due to the soil forces that bear against the transverse run (the run running perpendicular or at some angle to the direction of the pipe expansion). The stresses are proportional to the amount of soil deformation at the elbow or branch connection.

Piping elements are divided into three major categories depending upon what type of transverse element is being analyzed, as follows:

Category A: elbow or bend (see Fig. VII-3.3.2-1)

Category B: branch pipe joining the longitudinal run (see Fig. VII-3.3.2-2)

Copyright ASME International
Provided by IHS under license with ASME
No reproduction or networking permitted without license from IHS
Not for Resale

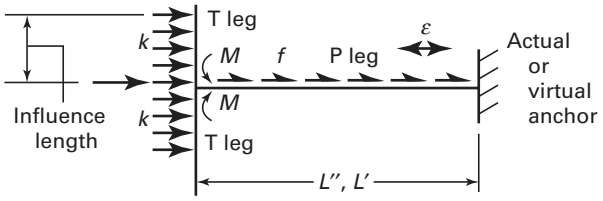

Fig. VII-3.3.2-3 Element Category C, Tee on End of P Leg

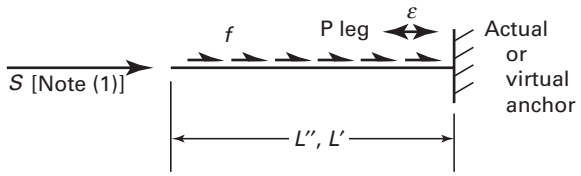

NOTE:
(1) Expansion joint pressure load plus sliding or convolution loads.

Fig. VII-3.3.2-4 Element Category D, Straight Pipe

Category C: longitudinal run ending in a tee (see Fig. VII-3.3.2-3)

Category D: straight pipe, no branch or transverse run (see Fig. VII-3.3.2-4)

Categories A, B, and C are further divided into three subcategories depending on the configuration of the pipe run at the end opposite that being analyzed. The piping elements are classified as follows:

A1, B1, C1: other end free or terminating in a flexible coupling or joint

A2, B2, C2: other end contains an elbow or tee

A3, B3, C3: other end is anchored

Category D elements include straight runs between an anchor (either actual or virtual) and a free end or a pipe section that is connected to an expansion joint.

The elements are further broken down into subtypes depending upon whether the longitudinal run (the pipe or P leg) and the transverse run (called the T leg) are long or short with respect to certain criteria. The transverse or T leg is the run against which the soil bears, producing an in-plane bending moment in elbow, branch, or tee. (Category D elements have no transverse leg.)

The strict criterion for a long or short transverse leg is whether the length of the transverse run L_1 is longer or shorter than $3\pi/4\beta$, the length at which the hyperbolic functions in Hetenyi's equations [2] approach unit. The critical value for L_1 is often called the "influence" length, or that portion of transverse or T run which is deflected or "influenced" by seismic soil strain or pipe thermal expansion along the axis of the longitudinal or P run. In practice, a critical influence length L_1 of $1/\beta$ to $1.2/\beta$ may often be used, since there is very little deformation or load in that portion of the transverse run which exceeds this length. This implies that the vast majority of the bearing load on the transverse or T leg occurs in the first several feet of the pipe at the bend or branch. In summary, a transverse pipe is "long" if

$$L_1 \geq 3\pi/4\beta \text{ (conservative)}$$

or

$$L_1 \geq 1/\beta \text{ to } 1.2/\beta \text{ (usually acceptable)}$$

The criterion for a short or long P leg is whether or not its length L_2 is sufficiently long to experience the maximum force that can develop at the friction interface. For full maximum friction force ($F_{max} = \epsilon AE$) to occur in a straight pipe axially free at each end, its length L_2 would have to equal or exceed $2L_m$ with L_m calculated by Eq. (5). If one end terminates in an elbow or a tee, with the other end remaining axially unrestrained, the total length L_2 necessary for full friction to develop is $L'' + L_m$; the friction force over L_m is equal to the soil bearing force S plus the friction force acting on the length L' or L'', which is called the effective slippage length. The effective slippage length is the maximum length along which slippage occurs at the pipe/soil interface of a pipe with a transverse leg or branch. The effective slippage length L'' for long pipes with long transverse legs is calculated by

$$L'' = \Omega[(1 + 2F_{max}/f\Omega)^{1/2} - 1] \text{ in.} \quad (7)$$

where

$$\Omega = AE\beta/k$$

and F_{max} is calculated by Eq. (6).

Equation (7) applies to bends, tees, and branches. Although Eq. (7) was developed for the case where $L_2 = L'' + L_m$, it applies also for any case where $L_2 > L'' + L_m$, since the length of the region where there is zero slippage at the friction interface is immaterial [1]. Using L'' as calculated by Eq. (7), it can now be established that a P leg is classified long if it meets these criteria:

(A) for Types A1, B1, C1, $L_2 \geq L_m + L''$

(B) for Types A2, B2, C2, $L_2 \geq 2L''$

(C) for Types A3, B3, C3, D, $L_2 \geq L''$

That point which is located a distance L' or L'' from the bend, branch, or tee, is called the virtual anchor, since it acts as if it were a three-axis restraint on the pipe.

VII-3.3.4 Locating the Virtual Anchor. Calculation of the forces and moments in buried piping at the changes in direction requires that the location of the virtual anchor (the effective slippage length L' away from the bend or branch element) in the P run and deformation δ of the soil at the buried element be established. For

Copyright ASME International
Provided by IHS under license with ASME
No reproduction or networking permitted without license from IHS
Not for Resale

elements of all types with long P legs, L'' may be calculated by Eq. (7).

For Types A1, B1, and C1 elements (with one end of the P leg free or unrestrained axially) with "short" P legs L' must be found by a less direct method as follows [1]:

$$L' = [-b + (b^2 - 4ac)^{1/2}]/2a \text{ in.} \quad (8)$$

where

$a = 3f/(2AE)$
$b = \epsilon - fL_2/(AE) + 2f\beta/k$
$c = -f\beta L_2/k$

However, the most highly stressed runs in a buried piping system typically are restrained at both ends, either by a combination of transverse runs or a transverse and an anchor (either real or virtual).

For Types A2, B2, and C2 elements with short P legs, L' is expressed by

$$L' = L_2/2 \text{ in.} \quad (9)$$

For Types A3, B3, C3, and D elements with short P legs, L' is expressed by

$$L' = L_2 \text{ in.} \quad (10)$$

VII-4.0 COMPUTER MODELING OF BURIED PIPING

VII-4.1 Determination of Stresses

With f, k, and L' or L'' established, the stresses in a buried pipe due to thermal expansion can be determined with a general purpose pipe stress computer program. A buried piping system can be modeled with a typical mainframe or microcomputer pipe stress program by breaking the buried portions into elements of convenient length and then imposing a transverse spring at the center of each element to simulate the passive resistance of the soil. The entire pipe can be divided into spring-restrained elements in this manner; however, the only regions of the pipe that really need to be modeled in this manner are the lengths entering and leaving elbows or tees. The analyst should refer to the program users' manual for guidance in modeling soil springs.

All pipe stress computer programs with buried piping analysis options require that the following factors be calculated or estimated:

(A) location of the virtual anchor (dimension L' or L'')

(B) soil spring rate $k_{i,j}$, which is a function of the modulus of subgrade reaction k

(C) influence length, also a function of k

Some programs ignore the friction at the pipe/soil interface; this is conservative for calculating bending stresses on the buried elbows and branch connections, but may be unconservative for calculating anchor reactions.

VII-4.2 Determination of Element Lengths

The element lengths and transverse soil spring rates for each element are calculated by the following procedure:

VII-4.2.1 Establish the element length dL and the number n of elements, as follows:

(A) Set the element length to be equal to between 2 and 3 pipe diameters. For example, dL for a NPS 6 may be set at either 1 ft or 2 ft, whichever is more convenient for the analyst.

(B) Establish the number n of elements by:

$$n = (3\pi/4\beta)/dL \quad (11)$$

This gives the number of elements, each being dL inches in length, to which springs are to be applied in the computer model. The number n of elements is always rounded up to an integer.

VII-4.2.2 Calculate the lateral spring rate $k_{i,j}$ to be applied at the center of each element.

$$k_{i,j} = kdL \text{ lb/in.} \quad (12)$$

where

k = the modulus of subgrade reaction calculated from Eq. (2).

VII-4.2.3 Calculate the equivalent axial load necessary to simulate friction resistance to expansion. The friction resistance at the pipe/soil interface can be simulated in the computer model by imposing a single force F_f in a direction opposite that of the thermal growth.

$$F_f = fL'/2 \text{ or } fL''/2 \text{ lb} \quad (13)$$

VII-4.2.4 Incorporate the springs and the friction force in the model. The mutually orthogonal springs $k_{i,j}$ are applied to the center of each element, perpendicular to the pipe axis. Shorter elements, with proportionally smaller values for the springs on these elements, may be necessary in order to model the soil restraint at elbows and bends. The friction force F_f for each expanding leg is imposed at or near the elbow tangent node, opposite to the direction of expansion.

VII-4.3 Determination of Soil Parameters

Soil parameters are difficult to establish accurately due to variations in backfill materials and degree of compaction. Consequently, values for elemental spring constants on buried pipe runs can only be considered as rational approximations. Stiffer springs can result in higher elbow stresses and lower bending stresses at nearby anchors, while softer springs can have the opposite effects. Backfill is not elastic, testing has shown that soil is stiffest for very small pipe movements, but becomes less stiff as the pipe movements increase. References [4], [7], and [8] discuss soil stiffness and recommend procedures for estimating values for k which are

Copyright ASME International
Provided by IHS under license with ASME
No reproduction or networking permitted without license from IHS
Not for Resale

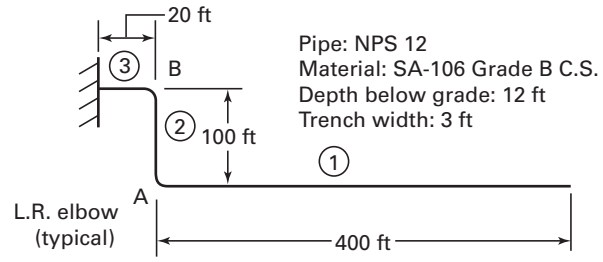

Fig. VII-5.0 Plan of Example Buried Pipe

consistent with the type of soil and the amount of pipe movement expected. The analyst should consult the project geotechnical engineer for assistance in resolving any uncertainties in establishing soils parameters, such as the modulus of subgrade reaction k, confining pressure p_c, and coefficient of friction μ.

VII-4.4 Pipe With Expansion Joints

An expansion joint must be considered as a relatively free end in calculating stresses on buried elbows and loads on anchors. Since incorporation of expansion joints or flexible couplings introduces a structural discontinuity in the pipe, the effects of the unbalanced pressure load and the axial joint friction or stiffness must be superimposed on the thermal expansion effects in order to determine the maximum pipe stresses and anchor loads.

VII-4.5 Pipe Stresses at Building Penetrations

Stresses at building penetrations can be calculated easily after the reactions due to thermal expansion in the buried piping have been determined. If the penetration is an anchor, then the stress due to the axial force $F_{\max}$ and the lateral bending moment M can be found by

$$S_E = F_{\max}/A + M/Z \text{ psi} \quad (14)$$

If the penetration is not an anchor, but is instead a simple support with a flexible water seal, it is necessary to determine the stiffness affects of the water seal material in order to calculate the stress in the pipe at the penetration. Differential movement due to building or trench settlement can generate high theoretical stresses at piping penetrations to buildings. Calculation of such stresses is beyond the scope of this Appendix.

VII-5.0 ALLOWABLE STRESS IN BURIED PIPE

Buried piping under axial stress can theoretically fail in one of two ways: either by column buckling (pipe pops out of the ground at mid-span) or local failure by crippling or tensile failure (much more serious than column buckling). Since buried piping stresses are secondary in nature, and since the piping is continuously supported and restrained (see Fig. VII-5.0), higher total stresses may be permitted as follows:

$$S_C \le S_A + S_h \quad (15)$$

where S_A and S_h are as defined in para. 102.3.2.

VII-6.0 EXAMPLE CALCULATIONS

VII-6.1 Assemble the Data

VII-6.1.1 Pipe Data

(A) diameter $D = 12.75$ in.
(B) wall thickness = 0.375 in.
(C) length of runs:
(C.1) Run 1: $L_1 = 100$ ft, $L_2 = 400$ ft
(C.2) Run 2: $L_1 = 20$ ft, $L_2 = 100$ ft
(C.3) Run 3: $L_1 = 100$ ft, $L_2 = 20$ ft
(D) Young's modulus $E = 27.9 \times 10^6$ psi
(E) moment of inertia $I = 279.3$ in.^{4}
(F) cross section metal area $A = 14.57$ in.^{2}

VII-6.1.2 Soil Characteristics

(A) soil density $w = 130$ lb/ft^3
(B) pipe depth below grade $H = 12$ ft (144 in.)
(C) type of backfill: dense sand
(D) trench width $B_d = 3$ ft (36 in.)
(E) coefficient of friction $\mu = 0.3$ min. to 0.5 max. (estimated)
(F) horizontal soil stiffness factor $C_k = 80$

VII-6.1.3 Operating Conditions

(A) pressure $P = 100$ psig
(B) temperature = 140°F
(C) ambient temperature = 70°F

VII-6.2 Calculate the Intermediate Parameters

VII-6.2.1 Relative Strain at the Pipe/Soil Interface. Thermal expansion for SA-106 Grade B carbon steel pipe from 70°F to 140°F is 0.0053 in./ft. Therefore,

$$\epsilon = (0.0053 \text{ in./ft})/(12 \text{ in./ft}) = 0.000424 \text{ in./in.}$$

VII-6.2.2 Modulus of Subgrade Reaction *k* [8]. Since the expansion is in the horizontal plane, use k_h from Eq. (2):

$$k_h = C_k N_h w D \quad (2)$$

$$C_k = 80$$

$$N_h = 0.285\, H/D + 4.3 = 0.285\ (12 \text{ ft})(12 \text{ in./ft})/12.75 \text{ in.} + 4.3 = 7.519$$

$$w = 130 \text{ pcf}/(1728 \text{ in.}^3/\text{ft}^3) = 0.0752 \text{ lb/in.}^3$$

$$D = 12.75 \text{ in.}$$

$$k_h = (80)(7.519)(0.0752)(12.75) = 577 \text{ lb/in.}^2$$

Copyright ASME International
Provided by IHS under license with ASME
No reproduction or networking permitted without license from IHS
Not for Resale

VII-6.2.3 Friction Forces Per Unit Length Acting at the Pipe/Soil Interface

$$f = \mu(P_c A_c + W_p) \quad (3)$$

Since the pipe lies more than 3 diameters below grade, the modified Marston equation from [1] is used to determine the confining pressure P_c of soil on the pipe.

$$P_c = wC_D B_d$$

$$C_D = 2.22 \text{ for } H/B_d = 12 \text{ ft}/3 \text{ ft} = 4 \text{ (see Table VII-3.2.3 for sand)}$$

$$P_c = (130 \text{ pcf})(2.22)(3 \text{ ft})/(144 \text{ in.}^2/\text{ft}^2) = 6.01 \text{ psi}$$

$$A_c = D(1 \text{ in.}) = (12.75 \text{ in.})(1 \text{ in.}) = 40.05 \text{ in.}^2/\text{in. of length}$$

$$W_p = 8.21 \text{ lb/in. for water-filled carbon steel pipe}$$

Maximum value of friction force per unit length $f_{\max}$:

$$f_{\max} = 0.5\,[(6.01 \text{ psi})(40.05 \text{ in.}^2/\text{in.}) + 8.21 \text{ lb/in.}] = 124.5 \text{ lb/in.} \quad (3)$$

Minimum value of friction force per unit length $f_{\min}$:

$$f_{\min} = 0.3\,[(6.01)(40.05) + 8.21] = 74.7 \text{ lb/in.} \quad (3)$$

VII-6.2.4 Pipe/Soil System Characteristic β [2]

$$\beta = [k_h/(4EI)]^{1/4} = [577 \text{ psi}/4(27.9 \times 10^6 \text{ psi})(279.3 \text{ in.}^4)]^{1/4} = 0.01166 \text{ in.}^{-1} \quad (4)$$

VII-6.2.5 Minimum Slippage Length L_m

$$L_m = \epsilon AE/f_{\min} = (0.000424 \text{ in./in.})(14.57 \text{ in.}^2)(27.9 \times 10^6 \text{ psi})/74.7 \text{ lb/in.} = 2307 \text{ in. or } 192 \text{ ft } 4 \text{ in.} \quad (5)$$

VII-6.2.6 Maximum Axial Force $F_{\max}$ Corresponding to L_m

$$F_{\max} = \epsilon AE = (0.000424)(14.57)(27.9 \times 10^6) = 172{,}357 \text{ lb} \quad (6)$$

VII-6.3 Classification of Runs

Classify the pipe runs in accordance with the models given in Table VII-6.3 and calculate the effective slippage length L' or L'' for each run.

VII-6.3.1 Run 1 is a Category A1 (elbow on one end, the other end free). Check to see if the transverse leg L_1 is long or short.

$$L_1 = 1200 \text{ in.}$$

$$3\pi/(4)(0.01166 \text{ in.}^{-1}) = 202 \text{ in.}$$

Since 1,200 in. > 202 in., L_1 is long. Check to see if the longitudinal leg L_2 is long or short, that is, longer or shorter than $L_m + L''$. Using Eq. (7) to calculate L'',

$$L'' = \Omega[(1 + 2F_{\max}/f_{\min}\Omega)^{1/2} - 1] \quad (7)$$

$$\Omega = AE\beta/k = (14.57 \text{ in.}^2)(27.9 \times 10^6 \text{ psi}) \times (0.01166 \text{ in.}^{-1})/577 \text{ psi} = 8214 \text{ in.}$$

$$L'' = 8214\{[1 + 2 \times 172{,}357/(74.7 \times 8{,}214)]^{1/2} - 1\} = 2{,}051 \text{ in.}$$

$$L_m + L'' = 2{,}307 + 2{,}051 = 4{,}358 \text{ in.}$$

Since L_2 = 400 ft or 4,800 in., then since 4,800 > 4,358, the pipe run length L_2 is long, and Run 1 can be fully classified as Category A1 (long transverse, long pipe).

NOTE: If $L_m + L''$ would have exceeded L_2, then L' would be recalculated using Eq. (8), the correct equation for a short pipe.

VII-6.3.2 Run 2 is a Category A2 (elbow on each end). Check to see if the legs L_1 and L_2 are long or short.

Since $L_1 > 3\pi/4\beta$ (240 in. > 202 in.) and since $L_2 < 2L''$ [1,200 in. < 2(2,051 in.)], then Run 2 can be fully classified as a Category A2 (long transverse, short pipe). Then

$$L' = L_2/2 = (1{,}200 \text{ in.})/2 = 600 \text{ in.}$$

VII-6.3.3 Run 3 is a Category A3 (anchor on one end, elbow on the other). Check to see if the legs L_1 and L_2 are long or short.

Since $L_1 > 3\pi/4\beta$ (1,200 in. > 202 in.) and $L_2 < L''$ (240 in. < 2,051 in.), then Run 3 can be fully classified as a Category A3 (long transverse, short pipe). Then

$$L' = L_2 = 240 \text{ in.}$$

NOTE: In order to fully qualify a buried piping system, it may also be necessary to include stresses due to weight of overburden (backfill) and vehicular loads [5, 6].

VII-6.4 Computer Modeling

Calculate the soil springs and friction force for use in a computer model of the buried pipe.

VII-6.4.1 Element Length. Set the element length to be ≈ 3 pipe diameters. dL = 36 in.

VII-6.4.2 Number of Elements. Only the soil within a length $3\pi/4\beta$ from the elbow will be subject to bearing force from the pipe. For the example system, $3\pi/4\beta$ = 202 in. Therefore, the number of elements needed is found by

Copyright ASME International
Provided by IHS under license with ASME
No reproduction or networking permitted without license from IHS
Not for Resale

Table VII-6.3 Equations for Calculating Effective Length L' or L''

Element Category	Equations for L' or L''			
	Short P Leg L'		Long P Leg L''	
A1, B1, C1	If $L_2 < L_m + L''$, $L' = [-b + (b^2 - 4ac)^{1/2}]/2a$ where $a = 3f/(2AE)$ $b = \epsilon - fL_2/(AE) + 2f\beta/k$ $c = -f\beta L_2/k$	(8)	If $L_2 \geq L_m + L''$, $L'' = \Omega[(1 + 2F_{max}/f_{min}\Omega)^{1/2} - 1]$	(7)
A2, B2, C2	If $L_2 < 2L''$, $L' = L_2/2$	(9)	If $L_2 \geq 2L''$, $L'' = \Omega[(1 + 2F_{max}/f_{min}\Omega)^{1/2} - 1]$	(7)
A3, B3, C3	If $L_2 < L''$, $L' = L_2$	(10)	If $L_2 \geq L''$, $L'' = \Omega[(1 + 2F_{max}/f_{min}\Omega)^{1/2} - 1]$	(7)
D	If $L_2 < L_m$, $L' = L_2$	(10)	If $L_2 \geq L_m$, $L'' = L_m = \epsilon AE/f$	(5)

$$n = (3\pi/4\beta)/dL = 202/36 = 5.61 \quad (11)$$

Therefore, use 6 elements, each 36 in. long.

VII-6.4.3 Spring Rate $k_{i,j}$. The spring rate to be applied to each element is found by

$$k_{i,j} = kdL \quad (12)$$

where k is from Eq. (2)

$$k_{i,j} = (577 \text{ psi})(36 \text{ in.}) = 20{,}772 \text{ lb/in.}$$

This is the theoretical spring rate to be imposed at the center of each element and normal to the surface of the pipe, with k_i in the plane of the expansion, and k_j perpendicular to the plane of expansion.

VII-6.4.4 Friction Force F_f. The friction forces to be applied at the elbow tangent points in Runs 1 and 2 are calculated as follows:

Parallel to Run 1:

$$F_f = fL''/2 \quad (13)$$

where

$f = f_{min} = 74.7$ lb/in.
$L'' = 2{,}051$ in.

$$F_f = (74.7 \text{ lb/in.})(2{,}051 \text{ in.})/2 = 76{,}605 \text{ lb}$$

Parallel to Run 2:

$$F_f = (74.7 \text{ lb/in.})(600 \text{ in.})/2 = 22{,}410 \text{ lb} \quad (13)$$

The friction force to be applied at the elbow tangent point in Run 3 is calculated as follows:

Parallel to Run 3:

$$F_f = (74.7 \text{ lb/in.})(240 \text{ in.})/2 = 8{,}964 \text{ lb} \quad (13)$$

The computer model then appears as is shown in Fig. VII-6.4.4.

VII-6.5 Results of Analysis

Computer analysis of the model shown in Fig. VII-6.4.4 gives combined stress S_C at various locations in the buried pipe as follows:

Location	S_C, psi
Virtual anchor	7,036
Elbow A	26,865
Elbow B	9,818
Penetration anchor	2,200

NOTE: S_C for this example includes longitudinal pressure stress, intensified bending stresses, and direct stresses due to axial loads from friction and soil bearing loads. It does not include weight of backfill or live loads.

The allowable stress as given by Eq. (15) is $S_A + S_h$, which for SA-106 Grade B steel pipe is 22,500 psi + 15,000 psi = 37,500 psi. Therefore, since the maximum S_C of 26,865 psi < 37,500 psi, the Code conditions are met.

VII-6.6 Anchor Load Example

If Element 1 were simply a straight pipe anchored at one end with the other end terminating in an expansion joint (see Fig. VII-6.6), the load on the anchor is found as follows.

(A) Calculate the maximum friction force acting along the friction interface.

$$F_f = F_{max} = \epsilon AE \quad (6)$$

$$F_{max} = \epsilon AE = (0.000424)(14.57)(27.9 \times 10^6) = 172{,}357 \text{ lb}$$

Copyright ASME International
Provided by IHS under license with ASME
No reproduction or networking permitted without license from IHS Not for Resale

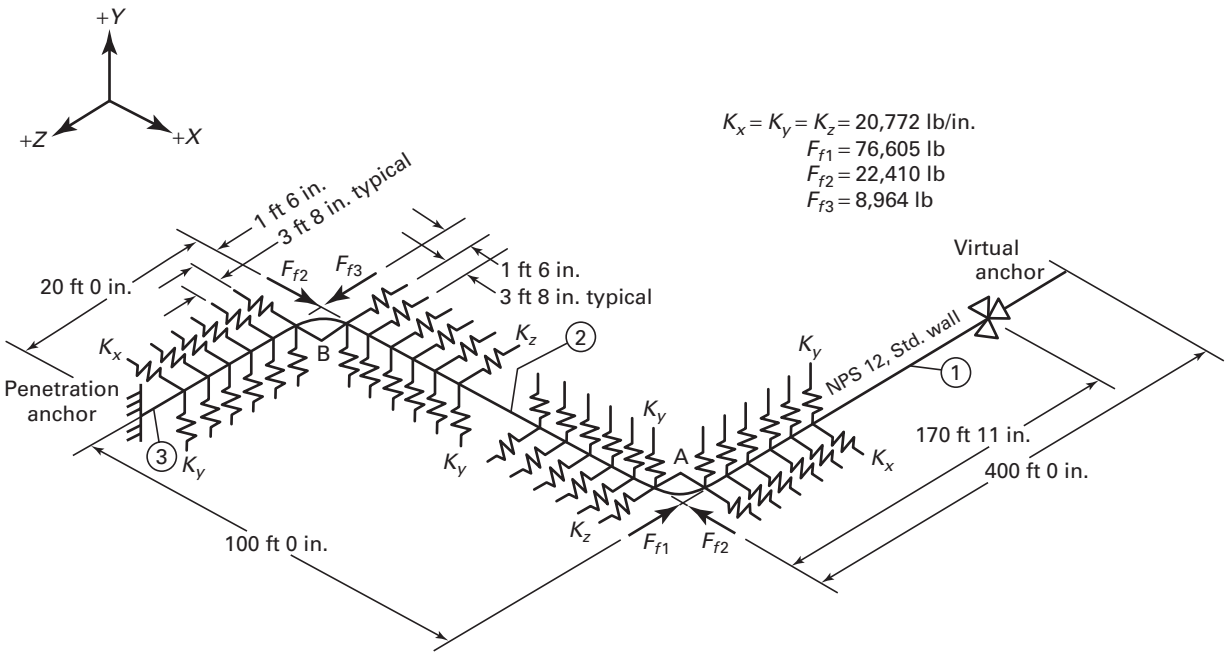

Fig. VII-6.4.4 Computer Model of Example Pipe

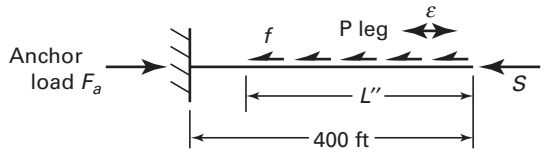

Fig. VII-6.6 Example Plan of Element 1 as A Category D Element

(B) Calculate the load S at the expansion joint.

$$S = F_j + S_p$$

where

F_j = expansion joint friction force
= 9,000 lb (from vendor data)

S_p = pressure force
= PA_s

where

P = design pressure
= 100 psig

A_s = effective cross-sectional area
= $\pi D^2/4$
= $\pi\ (12.75^2)/4$
= 127.6 in.^{2}

$$S_p = (100)(127.6) = 12{,}760 \text{ lb}$$

$$S = 9{,}000 + 12{,}760 = 21{,}760 \text{ lb}$$

(C) The total axial load F_a at the anchor then becomes

$$F_a = 172{,}357 + 21{,}760 = 194{,}117 \text{ lb}$$

If anchor loads must be limited, then the expansion joint should be located closer to the anchor in order to reduce the force due to friction at the pipe/soil interface.

VII-7.0 REFERENCES

[1] Goodling, E. C., "Buried Piping — An Analysis Procedure Update," ASME Publication PVP — Vol. 77, pp. 225–237, ASME Pressure Vessels and Piping Conference, Portland, June 1983

[2] Hetenyi, K. J., *Beams on Elastic Foundation,* The University of Michigan Press, Ann Arbor, Michigan, 1967

[3] Hunt, R. J., *et al*, "Seismic Response of Buried Pipes and Structural Components," Report by the Seismic and Materials Committee, ASCE, 1983

[4] Nyman, D. J., *et al, Guidelines for the Seismic Design of Oil and Gas Piping Systems,* Committee on Gas and Liquid Fuel Lifelines of the ASCE Technical Council on Lifeline Earthquake Engineering, 1984

[5] Young, O. C., and Trott, J. J., *Buried Rigid Pipes,* Elsevier Applied Science Publishers, 1984

[6] Moser, A. P., *Buried Pipe Design,* McGraw-Hill, 1990

[7] Audibert, J. M. E., and Nyman, K. J., "Soil Restraint Against Horizontal Motion of Pipes," Journal of the Geotechnical Engineering Division, ASCE, Vol. 103, No. GT10, October 1977, pp. 1119–1142

[8] Trautmann, C. H., and O'Rourke, T. D., "Lateral Force-Displacement Response of Buried Pipes," Journal

Copyright ASME International
Provided by IHS under license with ASME
No reproduction or networking permitted without license from IHS
Not for Resale

of Geotechnical Engineering, ASCE, Vol. 111, No. 9, September 1985, pp. 1077–1092

[9] Leonards, G. A., Editor, *Foundation Engineering,* McGraw-Hill, New York, 1962

[10] Goodling, E. C., "Restrained Underground Piping — Some Practical Aspects of Analysis and Design," Third U.S. Conference on Lifeline Earthquake Engineering, ASCE, Los Angeles, August 22–24, 1991

[11] Antaki, George, and Hart, J.D., et al, "Guide for the Design of Buried Steel Pipe," American Lifelines Alliance under contract with FEMA and ASCE, July 2001. **(04)**

--`,,```,,,,````-`-`,,`,,`,`,,`---

Copyright ASME International
Provided by IHS under license with ASME
No reproduction or networking permitted without license from IHS Not for Resale

INDEX

acceptable materials
  standards and specifications, 123.1, Table 126.1, Appendix F
access holes, 114.2.2
air and hydraulic distribution systems, 100.1.2(E)
alignment, 127.3(C)
allowable stress values, 102.3.1(A), Appendix A
allowable stresses, shear, 102.3.1(B)
aluminum pipe, 124.7(A)
anchors, 119.7.1(A.3), 120.2.3
anchors and guides, 120.2.3, 121.7.1
annealing, definition, 100.2
ANSI standards, Table 126.1, Appendix F
API standards, Table 126.1, Appendix F
arc welding, definition, 100.2
ASME codes and standards, Table 126.1, Appendix F
ASME SA and SB specifications, 123.1
assembly, 135
assembly, definition, 100.2
ASTM specifications, Table 126.1, Appendix F
ASTM standard test methods, Table 126.1, Appendix F
attachments
  design rules, 104.3.4
  structural, 121.8
  structural, definition, 100.2
attachment welds, 127.4.9
automatic welding, definition, 100.2
AWS filler metal specifications, Table 126.1, Appendix F
AWWA standards, Table 126.1, Appendix F

backing ring, definition, 100.2
backing rings, 111.2.2, 127.2.2
  acceptable types, 127.2.2(A.1)
  ferrous, 127.2.2(A)
  longitudinal welded joints, 127.2.2(A.3)
  nonferrous and nonmetallic, 127.2.2(B)
ball joints, 101.7.2, 119.5.1
base metal, definition, 100.2
bell end joints, 116
bending, 102.4.5, 129
  heat treatment, 129.3
bends, 119.5
bend thinning allowance, Table 102.4.5
blanks, pipe, 108.2
blowdown valves for instruments, 122.3.2(B.2)
blowoff piping, 122.1.7, 122.2
blowoff valves, 122.1.7(C)
boiler external piping, 100.1.2(A), 122.1
  authorized installation, 127.5.3(C)
  carbon or alloy steel, 124.3(C)
  cast iron, 124.4
  ductile (nodular) iron, 124.6
  malleable iron, 124.5
  materials acceptable, 123.1, Table 126.1, Appendix F
  miscellaneous systems, 122.1.6
  specifications Table, 126.1, Appendix F
  standards Table, 126.1, Appendix F
  steel, carbon and alloy, 124.3
boiler drains, 122.1.5
bolting, metric, 108.6
bolting, piping flange, 108.5, Table 112
bolting procedure, 135.3
bolts, 108.5
  engagement, 135.3.4
bolt studs, 108.5, Table 112
bonnet joint, valve, 107.5
branch connections, 127.4.8
  definition, 100.2
  design rules, 104.3.1
extrusions, 104.3.1(G)
  multiple openings, 104.3.1(D.2.5)
  subject to external pressure, 104.3.1(E)
weld design, 127.4.8
brazed joints, 117
braze welding definition, 100.2
brazing, 128
  alloy, 117.1
  definition, 100.2
  filler metal, 128.2.1
  flux, 128.2.2
  heating, 128.4.2
  material, 128.2
  preparation, 128.3
  procedure, 128.4
  qualification, 128.5
  records, 128.6
butt joint, definition, 100.2
butt welds
  alignment, 111.2.1, 127.3(C)
  end Preparation Dimensions, 127.3.1(A.2)
bypass valves, 122.5.2 and 122.5.3
bypasses, valve, 107.6

carbon limitations
  welded construction, 124.2(C)
cast iron limitations, 124.4
cast iron to steel flanged joints, 135.3.3
central and district heating systems, 100.1.1, 100.1.2(B)

Copyright ASME International
Provided by IHS under license with ASME
No reproduction or networking permitted without license from IHS
Not for Resale

centrifugally cast pipe, definition, 100.2
cladding and lining materials, 124.8
cleaning, welding, 127.3(B)
cleaning fluid load, 101.6.3
cold bending, 129.3.1, 129.3.3B
cold spring, 119.2
columns, water, 122.1.6(C)
compression joints, 115
concavity, girth butt welds, 127.4.2(C.5)
condensing reservoirs, 122.3.2(C)
connection branch, definition, 100.2
connection, euipment, definition, 100.2
constant supports, 121.7.4
consumable inserts, 127.2.3
contraction, 101.7
control piping, 122.3.3
cooling effect, 101.4.1
copper pipe, 124.7(A)
corrosion allowance, 102.4.1
corrosion control, Appendix IV
corrosive liquids and gasses, 122.9
corrugated pipe, 119.5
creep range, 119.3
curved pipe, 104.2

dead load, 101.6.2
defect, definition, 100.2
definitions, 100.2
design
  cast iron, 124.4
  criteria, 102
  ductile (nodular) iron, 124.6
  malleable iron, 124.5
  nonferrous metals, 124.7
  nonmetallic pipe, 124.8
Steel, 124.3
design conditions, 101
design pressure, 104.1.2(A)
design temperature, 101.3.2
desuperheaters, 122.4
deterioration of materials, 124.10
discontinuity, definition, 100.2
dissimilar welds — backing, 127.2.2(A.2)
district heating systems, 100.1.1, 122.14
double submerged arc welded pipe, definition, 100.2
drains, valve, 122.1.5B
drain piping, 122.1.5A
drip lines, 122.11.1
ductile iron bell end piping, 135.7
ductile (nodular) iron limitations, 124.6
ductile iron pipe thickness, 104.1.2(B)
ductility, 119.3
dynamic effects, 101.5

earthquake loadings, 101.5.3
elbows, 104.2.2
electric flash welded pipe, definition, 100.2
electric fusion welded pipe, definition, 100.2
electric resistance welded pipe, definition, 100.2
end preparation, welding, 127.3(A)
ends, valve, 107.3
engineering design, definition, 100.2
entrapped pressure, valve, 107.1(C)
equipment connection, definition, 100.2
equivalent full temperature cycle, 102.3.2(C)
erection, definition, 100.2
erosion allowance, 102.4.1
erosion/corrosion, Appendix IV
examination, 136.3
  general, 136.3.1
  liquid penetrant, 136.4.4
    acceptance standards, 136.4.4(B)
    evaluation of indications, 136.4.4(A)
  magnetic particle, 136.4.3
    acceptance standards, 136.4.3(B)
    evaluation of indications, 136.4.3(A)
  mandatory minimum requirements, Table 136.4
  radiography, 136.4.5
    acceptance standards, 136.4.5(A)
  requirements, 136.4
  visual, 136.4.2
    acceptance standards, 136.4.2(A)
exhaust piping, 122.12
expanded joints, 113
expansion, 119
  joints, 101.7.2
  properties, 119.6
  stress, 102.3.2(C)
external design pressure, 101.2.4
extruded pipe, definition, 100.2
extrusion, 129.2

fabrication, definition, 100.2
face of weld, definition, 100.2
facings, flange, 108.3, 108.5.2, Table 112
federal specifications, Table 126.1, Appendix F
feedwater piping, 122.1.3
feedwater valves, 122.1.7(B)
filler metal, 127.2.1
  brazing, 128.2.1
  definition, 100.2
fillet weld, definition, 100.2
fillet welds, 111.4
  welding, 127.4.4
fittings, 115
fittings and joints for instrument, control, and
    sampling piping, 122.3.6
fixtures, 121.2
flammable fluids, 117.3(A)
flammable and toxic gases and liquids, 122.8
flange bolting, pipe, 108.5, Table 112
flanged elbows, 104.2.2

Copyright ASME International
Provided by IHS under license with ASME
No reproduction or networking permitted without license from IHS
Not for Resale

flanged joints, 112
flange facings, 108.3, 108.5.2, Table 112
flange gaskets, 108.4, 108.5.2, Table 112
flanged joints, 135.2.1
flange, material combinations, Table 112
flanges, pipe, 108.1
flared joints, 115
flareless joints, 115
flattening, 104.2.1(C)
flaw, definition, 100.2
flexible hose
  metallic, 101.7.2, 106.4, 119.5, 121.7.1(C)
  nonmetallic, 105.3(C)
flexibility, 119
  factors, 119.7.3, Appendix D
fluid expansion effects, 101.4.2
flux, brazing, 128.2.2
forged and bored pipe, definition, 100.2
forming, 129.2
formed components, heat treatment, 129.3
furnace butt welded pipe, definition, 100.2
full fillet weld, definition, 100.2
fusion, definition, 100.2

gage cocks, 122.1.6(C)
gage glass, 122.1.6
  connections, 122.1.6(A)
galvanic corrosion, 124.7(B)
gaskets, pipe flange, 108.4, 108.5.2, Table 112
gas welding, definition, 100.2
geothermal systems, 100.1.2(B)
girth butt welds, 127.4.2
graphitization, 124.2(A) and (B)
grinding, girth butt welds, 127.4.2(C.4)
groove weld, definition, 100.2

hanger adjustments, 121.4
hanger spacing, 121.5
hangers and supports, definitions, 100.2
heat affected zone, definition, 100.2
heat exchanger piping, design temperature, 101.3.2(B)
heating, brazing, 128.2.3
heat treatment
  definition, 100.2
  heating and cooling requirements, 132.6, 132.7
  austenitic stainless steel bends and formed components, 129.3.4
  bends, 129.3
  formed components, 129.3
welds, 127.4.10, 131, 132, Table 132

impact, 101.5.1
imperfection, definition, 100.2
indication, definition, 100.2
inert gas metal arc welding
  definition, 100.2
inquiries, App.H
inspection
  instrument, control, and sampling piping, 122.3.9(A)
  requirements, 136.2
inspection and examination, 136
  general, 136.1.1
  verification of compliance, 136.1.2
inspectors
  qualification of owner's, 136.1.4
  rights of, 136.1.3
instrument
  piping, 122.3
  valves, 122.3.2(B)
integral type, 121.8.2
internal design pressure, definition, 101.2.2
internal pressure design, 104.1.2
interruption of welding, 131.6
intersections, 104.3
  branch connections, 104.3.1
  design rules, 104.3

joint, butt, definition, 100.2
joint clearance, brazing, 128.3.2
joint design—definition, 100.2
joint efficiency, 102.3.2(C)
joint, mechanical, definition, 100.2
joint penetration, definition, 100.2
joints, valve bonnet, 107.5

lapping, 129.2
level indicators, 122.1.6
limitations on materials, 123.2
live load, 101.6.1
loads and supporting structures, 121.4
local overstrain, 119.3
local postweld heat treatment, 132.7
longitudinal welds, 127.4.3
loops, 119.5
low energy capacitor discharge welding, 127.4.9(A)

main line shutoff valves, 122.3.2(A.1)
malleable iron limitations, 124.5
manual welding, definition, 100.2
marking
  materials, products, 123.1(E)
  valve, 107.2
materials
  general requirements, 123
  limitations, 124
  miscellaneous parts, 125
    gaskets, 125.3
    bolting, 125.4
  specifications and standards, 123.1, Table 126.1, Appendix F

--`,,```,,,,````-`-`,,`,,`,`,,`---
Copyright ASME International
Provided by IHS under license with ASME
No reproduction or networking permitted without license from IHS
Not for Resale

stresses, 123.1
maximum allowable internal pressure, 102.2.4
maximum allowable temperature, 102.2.4
maximum allowable working pressure, definition, 100.2
may, definition, 100.2
mechanical gland joints, 118
mechanical joint, definition, 100.2
mechanical strength, 102.4.4
minimum wall thickness, 104.1.2(A)
miscellaneous systems, 122.1.6
miters, 104.3.3
miter, definition, 100.2
moduli of elasticity, Appendix C
modulus of elasticity, 119.6.2, 199.6.4
MSS standards, Table 126.1, Appendix F

nomenclature, Appendix G
normal operating condition, 102.2.3
nominal wall, 104.1.2(A)
nonboiler external piping, 100.1.2(A)
noncyclic service, 119.7(A.3)
nonferrous material limitations, 123.2.7
nonferrous pipe and tube, 104.1.2(C.3)
nonintegral type, 121.8.1
nonmetallic piping materials limitations, 124.9
normalizing, definitions, 100.2
nuts, 108.5.1, Table 112

occasional loads, 102.2.4
offsets, 119.5
oil and flammable liquids, 122.7.1
operation qualification
general, 127.5.1
responsibility, 127.5.3(B)
operator, welding, definitions, 100.2
other rigid types (fixtures), 121.7.2
outside screw and yoke, valve, 107.4
ovality, 104.2.1(B)
overpressurization, Valve, 107.1(C)
oxygen cutting, definition, 100.2
oxygen gouging, definition, 100.2

peening, 100.2
penetration, root, definition, 100.2
PFI standards, Table 126.1, Appendix F
pipe
attachments, design rules, 104.3.4
bends, 104.2.1
blanks, 108.2
definition, 100.2
flange bolting, 108.5, Table 108.5.2
flanges, 108.1
intersections, design rules, 104.3
supporting elements, design, 121
supporting elements, definition, 100.2
piping joints, 100
plastic strain, 119.3
Poisson's ratio, 119.6.3
postweld heat treatment, 132
definition, 100.2
definition of thickness governing PWHT, 132.4
dissimilar metal welds, 132.2
exemptions, 132.3
furnace heating, 132.6
heating and cooling rates, 132.5
local heating, 132.7
mandatory requirements, Table 132
minimum holding temperature, Table 132
minimum holding time, Table 132
preheating, definition, 100.2
preheating, 131
dissimilar metals, 131.2
temperature, 131.4
preparation for welding, 127.3
pressure
definition, 100.2
entrapped liquids, valve, 107.1(C)
gages, 122.1.6
reducing valves, 122.5, 122.14
relief piping, 122.6
temperature ratings, 102.2
waves, 101.5.1
pressure tests
general requirements, 137.1
maximum stress during test, 137.1.4
personnel protection, 137.1.3
subassemblies, 137.1.1
temperature of test medium, 137.1.2
testing schedule, 137.1.5
hydrostatic, 137.4
equipment Check, 137.4.4
material, 137.4.1
required pressure, 137.4.5
test medium, 137.4.3
venting, 137.4.2
initial service, 137.7
mass-spectrometer and halide, 137.6
pneumatic, 137.5
equipment check, 137.5.3
general, 137.5.1
preliminary test, 137.5.4
required presssure, 137.5.5
test medium, 137.5.2
preparation for test, 137.2
expansion joints, 137.2.3
flanged joints containing blanks, 137.2.5
isolation of piping and equipment, 137.2.4
joint exposure, 137.2.1
temporary supports, 137.2.2
test medium expansion, 137.2.6
retesting, 137.8

Copyright ASME International
Provided by IHS under license with ASME
No reproduction or networking permitted without license from IHS
Not for Resale

specific piping systems, 137.3
boiler external piping, 137.3.1
nonboiler external piping, 137.3.2
procedures, welding, definitions, 100.2
proprietary joints, 118
pump discharge piping, 122.13
pump suction piping, 122.12

qualification, brazing, 128.5
qualification, welding, 127.5
procedure responsibility, 127.5.3(A)
responsibility, 127.5.2
welder and welding operation responsibility, 127.5.3(B)
quality control requirements for boiler external piping (BEP), App. J

ratings
at transitions, 102.2.5
variation from normal operation, 102.2.4
records, brazing, 128.6
records, welding, 127.6
relief devices, 122.5.3, 122.14.1
reducers, 104.6
reinforcement
branch connections, 104.3.1(D)
of weld, definitions, 100.2
of welds, Table 127.4.2
zone, 104.3.1(D.2.4)
repair, weld defects, 127.4.11
restraints, 119.5, 119.7.3
reversed stress, 119.2
ring, backing, definition, 100.2
rolled joints, 113
rolled pipe, definition, 100.2
root opening, definitions, 100.2

safety valves, 107.8, 122.1.7(D), 122.5, 122.14.1
sampling piping, 122.3.5(C)
scope, 100.1
seal weld
definition, 100.2
welds, 111.5
thread joints, 127.4.5, 135.5.2
seamless pipe, definition, 100.2
self-springing, 119.2
semiautomatic arc welding, definition, 100.2
shall, definition, 100.2
shielded metal arc welding, definition, 100.2
shock, 117.3(C)
should, definition, 100.2
size of weld, definition, 100.2
slag inclusion, definition, 100.2
sleeve coupled joints, 118
snow and ice load, 101.6.1
socket — type joints, 117
socket welds, 111.3
socket welds, assembly, 127.3E
soldering
definition, 100.2
filler metal, 128.2.1
flux, 128.2.2
flux removal, 128.4.3
heating, 128.4.2
material, 128.2
preparation, 128.3
procedure, 128.1.2
soft soldered joints, 117.2, 117.3
soldered joints, 117
spacing, welding, 127.3(D)
special safety provisions — instrument, control, and sampling piping, 122.3.7
specifications and standards organizations, Table 126.1, Appendix F
specifications, valve, 107.1(A)
specific piping systems, design, 122
springs, 121.6
samping, 133
standards
acceptable, 123.1, Table 126.1, Appendix F
valve, 107.1(A)
standard welding procedure specifications, 127.5.4
statically cast pipe, definition, 100.2
steam distribution systems, 122.14
steam piping, 122.1.2
steam hammer, 101.5.1
steam jet cooling systems, 100.1.2(D)
steam retention, 107.1(D)
steam stop valves, 122.1.7(A)
steam trap piping, 122.11
steel
unassigned stress values, 102.3.1(D)
unknown specification, 102.3.1(C)
steel casting quality factor, 102.4.6
steel limitations
carbon content, 124.3(D)
graphitization, 124.2(A) and (B)
welding, 124.3(C)
stem threads, valve, 107.4
strain, 119
concentration, 119.3
distribution, 119.3
range, 119.2
stress, 119.6.4
analysis, 119.7
bearing, 121.2(F)
compressive, 121.2(E)
concentration, 119.3
external pressure, 102.3.2(B)

Copyright ASME International
Provided by IHS under license with ASME
No reproduction or networking permitted without license from IHS
Not for Resale

intensification, 119.7.1(D)
factors, 111.2.1, 119.7.3
internal pressure, 102.3.2(A)
limitations on materials, 123.2, Appendix A
limits, 102.3
occasional loads, 102.3.3
longitudinal pressure, 102.3.2(D)
raisers, 119.3
range, 102.3.2(C), 119.2
reduction, 119.2
relaxation, 119.2
relieving, definition, 100.2
shear, 121.2(D)
tension, 121.2
structural attachments, 121.8
definitions, 100.2
submerged arc welding, definitions, 100.2
supports, design, 119.5, 121
instrument, control, and sampling piping, 122.3.8
surface condition, girth butt welds, 127.4.2(C)
surface preparation, brazing, 128.3.1
sway braces, 121.7.5
swedging, 129.2
swivel joints, 101.7.2, 119.5

tack weld, definitions, 100.2
tack welds, 127.4.1(C)
take-off connections, 122.3.2
temperature, 101.3.1
graphitization, 124.3
limitations
cast iron, 124.4
ductile (nodular) iron, 124.6
malleable iron, 124.5
stress values, 124.1
temporary piping, 122.10
terminal points, boiler external piping, 100.1.2(A)
testing — instrument, Control, and sampling piping, 122.3.9(A)
test load, 101.6.3
thermal contraction, 119.1
thermal expansion, 101.7, 119, Appendix B
analysis, 119.7.1
range, 119.6.1
threaded brass pipe, 104.1.2(C.2)
threaded connections
aluminum pipe, 124.7(C)
threaded copper pipe, 104.1.2(C.2)
threaded joints, 114
lubricant, 135.5.1
seal welded, 135.5.2
threaded piping, 135.5
threaded steel pipe, 104.1.2(C.1)
threading and grooving allowance, 102.4.2
threads, valve stem, 107.4
throat of fillet weld, definitions, 100.2
toe of weld, definitions, 100.2
toxic fluids, 117.3(A)
transitions, local pressure, 102.2.5
transitions, O.D., 127.4.2(B)
transients
pressure, 102.2.4
temperature, 102.2.4
trap discharge piping, 122.11.2
treatment, heat, definitions, 100.2
tungsten electrode, definitions, 100.2

undercut, definitions, 100.2
unit expansion, 119.6.1
undercuts, girth butt welds, 127.4.2(C.3)
upsetting, pipe ends, 129.2

vacuum, 101.4.1
valves, 107
blowoff, 122.1.7(C)
bonnet joint, 107.5
bypasses, 107.6
drains, 107.1(C)
ends, 107.3
feedwater, 122.1.7(B)
and fittings, 122.1.7
flanged ends, 107.3
general, 107.1
marking, 107.2
noncomplying designs, 107.1(B)
safety, 107.8, 122.1.7(D)
specifications, 107.1(A)
standards, 107.1(A)
steam stop, 122.1.7(A)
threaded ends, 107.3
welding ends, 107.3
variable supports, 121.7.3
variations from normal operation, 102.2.4
vibration, 101.5.4, 117.3(C)

washers, 108.5.1
water
columns, 122.1.6
hammer, 101.5.1
level indicators, 122.1.6
weight effects, 101.6
weld
concavity, 127.4.2(C.5)
definitions, 100.2
welded branch connections, 127.4.8
construction, carbon limitation, 124.2(C)
welded joints, 111
weld, fillet, definition, 100.2
weld joint efficiency factor, longitudinal, 102.4.3
welder, definitions, 100.2
welding, 127

Copyright ASME International
Provided by IHS under license with ASME
No reproduction or networking permitted without license from IHS
Not for Resale

arc, definition, 100.2
automatic, definition, 100.2
braze, definition, 100.2
end transition, Fig. 127.4.2
filler metal, 127.2.1
general, 127.1
gun, definition, 100.2
low energy capacitor discharge, definition, 100.2
manual, definition, 100.2
material, 127.2
operator, definitions, 100.2
preparation, 127.3
procedure, 127.4
process qualification, 127.1.1
records, 127.6
responsibility, 127.5.2
weldment, definitions, 100.2
WPS, qualification, 127.5.1
weld reinforcement heights, Table 127.4.2
weld defect repair, 127.4.11
weld, seal, definition, 100.2
weld surface preparation, 127.4.2(C)
weld, tack, definition, 100.2
wind loadings, 101.5.2

--`,,```,,,,`````-`-`,,`,,`,`,,`---

Copyright ASME International
Provided by IHS under license with ASME
No reproduction or networking permitted without license from IHS
Not for Resale

ASME B31.1
INTERPRETATIONS VOLUME 39

Replies to Technical Inquiries
January 1, 2003 through June 30, 2003

FOREWORD

It has been agreed to publish intepretations issued by the B31 Committee concerning B31.1 as part of the update service to the Code. The interpretations have been assigned numbers in chronological order. Each interpretation applies either to the latest Edition or Addenda at the time of issuance of the interpretation or the Edition or Addenda stated in the reply. Subsequent revisions to the Code may have superseded the reply.

The replies are taken verbatim from the original letters, except for a few typographical and editorial corrections made for the purpose of improved clarity. In some instances, a review of the interpretation revealed a need for corrections of a technical nature. In these cases, a revised reply bearing the original interpretation number with the suffix R is presented. In the case where an interpretation is corrected by Errata, the original interpretation number with the suffix E is used.

ASME procedures provide for reconsideration of these interpretations when or if additional information is available which the inquirer believes might affect the interpretation. Further, persons aggrieved by an interpretation may appeal to the cognizant ASME committee or subcommittee. As stated in the Statement of Policy in the Code documents, ASME does not "approve," "certify," "rate," or "endorse" any item, construction, proprietary device, or activity.

Interpretations Nos. 2 through 7 were included with the update service to the 1983 Edition and Interpretations Nos. 8 through 13 were included with the update service to the 1986 Edition. Interpretations Nos. 14 through 19 were included with the update service to the 1989 Edition. Interpretations Nos. 20 through 25 were included with the update service to the 1992 Edition. Interpretations Nos. 26 through 30 were included with the update service to the 1995 Edition. Interpretations Nos. 31 through 34 were included with the update service to the 1998 Edition. Interpretations Nos. 35 through 38 were included with the update service to the 2001 Edition. For the 2004 Edition, interpretations will be issued as necessary up to twice a year until the publication of the 2007 Edition.

Copyright ASME International
Provided by IHS under license with ASME
No reproduction or networking permitted without license from IHS
Not for Resale

B31.1

Subject	Interpretation	File No.
Para. 131.6	39-1	03-00007
Para. 132.4.3, Material Specifications	39-2	02-04211

Copyright ASME International
Provided by IHS under license with ASME
No reproduction or networking permitted without license from IHS
Not for Resale

Interpretation: 39-1

Subject: B31.1-2001 Edition, Para. 131.6

Date Issued: June 4, 2003

File: 03-00007

Question: Are the requirements of para. 131.6 applicable for welds from initiation through the completion of any required by PWHT?

Reply: Yes.

Interpretation: 39-2

Subject: B31.1-2001 Edition, Para. 132.4.3, Material Specifications

Date Issued: July 23, 2003

File: 02-04211

Question (1): Is there any manufacturing tolerance applied to the term *nominal material thickness* in para. 132.4.3?

Reply (1): The B31.1 Code does not address tolerances.

Question (2): Is the *nominal thickness* as defined in para. 100.2 and the *nominal material thickness* per para. 132.4.3 the same dimension?

Reply (2): Nominal thickness refers to the product standard or design thickness of a component. Nominal material thickness, for the purpose of determining PWHT requirements, refers to the nominal thickness of the thicker of the materials being joined at the weld.

Copyright ASME International
Provided by IHS under license with ASME
No reproduction or networking permitted without license from IHS Not for Resale

--`,,```,,,,````-`-`,,`,,`,`,,`---
Copyright ASME International
Provided by IHS under license with ASME
No reproduction or networking permitted without license from IHS
Not for Resale

B31.1 — Cases No. 29

A Case is the official method of handling a reply to an inquiry when study indicates that the Code wording needs clarification, or when the reply modifies the existing requirements of the Code, or grants permission to use new materials or alternative constructions.

ASME has agreed to publish Cases issued by the B31 Committee concerning B31.1 as part of the update service to B31.1. The text of proposed new and revised Cases and reaffirmations of current Cases appear in *Mechanical Engineering* for public review. A notice also appears in *Mechanical Engineering* when new and revised Cases are approved. New and revised Cases, as well as announcements of reaffirmed Cases and annulments, then appear in the next update. All Cases currently in effect at the time of publication of the 1989 Edition of the Code were included in the update that immediately followed, Interpretations No. 14 and Cases No. 9. As of the 1992 and later Editions, all Cases currently in effect at the time of publication of an Edition are included with it as an update.

This update, Cases No. 29, which is included after the last page of the 2004 Edition and the Interpretations Volume 39 that follow, contains the following Cases.

145	153	163	171	174	176
146-1	162	165	173-1	175	177

Cases 164 and 170, which were included in Cases No. 27, were allowed to expire.

The page numbers for the Cases supplements included with updates to the 2004 Edition start with C-1 and will continue consecutively through the last update to this Edition. The Cases affected by this supplement are as follows:

Page	*Location*	*Change*
C-2	Case 145	New expiration date: July 31, 2006
C-3	Case 146-1	New expiration date: March 31, 2007
C-5	Case 153	New expiration date: November 30, 2007
C-6	Case 162	New expiration date: September 30, 2007
C-8	Case 163	New expiration date: July 31, 2006
C-10	Case 165	New expiration date: July 31, 2007
C-11	Case 171	New expiration date: January 31, 2007
C-12	Case 173-1	(1) Revised (2) New expiration date: May 31, 2007
C-13	Case 174	Added
C-14	Case 175	Added
C-15	Case 176	Added
C-17	Case 177	Added

--`,,```,,,,````-`-`,,`,,`,`,,`---
Copyright ASME International
Provided by IHS under license with ASME
No reproduction or networking permitted without license from IHS
Not for Resale

B31 CASE 145
Nickel–Molybdenum–Chromium Alloys (UNS N10276), ANSI/ASME B31.1 Construction

Approval Date: August 1985

Reaffirmation Date: February 18, 2004
This case shall expire on July 31, 2006, unless previously annulled or reaffirmed

Inquiry: May nickel–molybdenum–chromium alloy (UNS N10276) fittings, rod, plate, and strip, seamless and welded pipe and tube conforming to ASTM B 366, B 574, B 575, B 619, B 622, and B 626 be used for ANSI/ASME B31.1 construction?

Reply: It is the opinion of the Committee that nickel–molybdenum–chromium alloy (UNS N10276) may be used in ANSI/ASME B31.1 construction provided:

(a) the maximum allowable stress values for the material shall be those given in Table I. For welded components, these values shall be multiplied by a factor of 0.85.

(b) welded fabrication shall conform to the applicable requirements of B31.1:

(1) Welding Procedure and Performance Qualifications shall be conducted in accordance with Section IX, ASME Boiler and Pressure Vessel Code.

(2) Welding shall be done by any welding process capable of meeting the requirements.

(3) All filler metal, including consumable insert material, shall comply with the requirements of Section IX.

(4) When welding repair of a defect is required, it shall be in accordance with ANSI/ASME B31.1, para. 127.4.11. When a defect is removed but welding repair is unnecessary, the surface shall be contoured to eliminate any sharp notches or corners. The contoured surface shall be reinspected by the same means originally used for locating the defect to assure it has been completely removed.

Table 1

For Metal Temperature Not Exceeding, °F	Maximum Allowable Stress, ksi [Note (1)]	Maximum Allowable Stress, ksi
100	25.0	25.0
200	25.0	25.0
300	25.0	23.0
400	24.3	21.2
500	23.9	20.0
600	23.5	18.8
650	23.3	18.3
700	23.1	17.8
750	22.9	17.4
800	22.8	17.1
850	22.6	16.8
900	22.3	16.6
950	22.1	16.5
1000	21.8	16.5

NOTE:
(1) Due to the relatively low yield strength of these materials, these higher stress values were established at temperatures where the short time tensile properties govern to permit the use of these alloys where slightly greater deformation is acceptable. These higher stress values exceed 67% but do not exceed 90% of the yield strength at temperature. Use of these stresses may result in dimensional changes due to permanent strain. These stress values are not recommended for the flanges of the gasketed joints or other applications where slight amounts of distortion can cause leakage or malfunction.

(5) Heat treatment after fabrication or forming is neither required nor prohibited.

(c) this Case number shall be identical in the Data Report.

Copyright ASME International
Provided by IHS under license with ASME
No reproduction or networking permitted without license from IHS
Not for Resale

B31 CASE 146-1
Nickel–Chromium–Molybdenum–Columbium Alloy (UNS N06625) in ASME B31.1 Construction

Approval Date: March 1989

Reaffirmation Date: February 18, 2004
This case shall expire on March 31, 2007, unless previously annulled or reaffirmed

Inquiry: May nickel–chromium–molybdenum–columbium alloy (UNS N06625) conforming to the specifications listed in Table I be used for construction of ASME B31.1 Power Piping systems?

Table 1

Plate, Sheet, and Strip	B 443-84
Seamless Pipe and Tube	B 444-84
Rod and Bar	B 446-84
Forgings	B 564-86
Wrought Fittings	B 366-87

Reply: It is the opinion of the Committee that nickel–chromium–molybdenum–columbium alloy (UNS N06625) conforming to the product specifications shown in Table I may be used in the construction of power piping complying with the rules of ASME B31.1 provided the following additionl requirements are met.

(a) THESE MATERIALS SHALL NOT BE USED FOR BOILER EXTERNAL PIPING. See para. 100.1.2(A).

(b) The allowable stress values shall be those listed in Table II.

(c) All longitudinal welds in any of the materials listed in Table I shall be completely examined by radiography. Radiographic examination shall be in accordance with the requirements of the ASME Boiler and Pressure Vessel Code, Section VIII, latest edition, para. UW-51.

(d) The welding procedure qualification and performance qualifications shall be conducted in accordance with ASME Boiler and Pressure Vessel Code, Section IX. For qualifying welding procedures, the material is P-No. 43.

(e) Postweld heat treatment of this material is neither required nor prohibited. However, no postweld heat treatment shall be performed except by agreement between the owner and the manufacturer, installer, or erector. The temperature, time, and method of heat treatment shall be covered by the agreement.

(f) Longitudinally seam welded pipe, with or without filler metal added, is permitted. Longitudinally seam welded pipe shall be fabricated from plate meeting the requirements of ASTM B 443. All seam welded pipe shall comply with the following requirements.

(1) The welds shall be made by an electric arc process.

(2) The joints shall be full penetration double-welded or single-welded butt joints employing fusion welding processes as defined under para. 100.2 Definitions of ASME B31.1. Where backing rings or strips are used, the ring or strip material shall be of the same P-Number as the plate being joined. Backing rings or strips shall be completely removed after welding prior to radiography, and the exposed weld surface shall be examined visually for conformance to the requirement of the following paragraph. Welds made by procedures using backing rings which remain in place are prohibited.

(3) The weld surface on the outside diameter side of the pipe shall be flush with the base plate or shall have a reasonably uniform crown in accordance with Table 127.4.2 of ASME B31.1. The weld reinforcement on the inside diameter side of the pipe may be removed at the manufacturer's option or by agreement between the manufacturer and purchaser. The contour of the reinforcement shall be reasonably smooth and free of irregularities. The deposited metal shall be fused uniformly into the plate surface. No concavity of contour is permitted.

(4) Weld defects shall be repaired by removal to sound metal and rewelding. Subsequent heat treatment and inspection shall be as required on the original welds.

(5) When heat treatment is required, such heat treatment shall be done in accordance with para. 5, after all welding.

(6) The requirements of ASTM A 530 for welded pipe shall be met. Variations in wall thickness and length for longitudinally seam welded pipe with filler metal added shall be the same as required in ASTM A 530 for seamless or longitudinally seam welded pipe without filler metal.

Copyright ASME International
Provided by IHS under license with ASME
No reproduction or networking permitted without license from IHS
Not for Resale

Table 2 Allowable Stress Values

Spec No.	Metal Temp. [Note (1)], °F, Not Exceeding	Allowable [Notes (2), (3)] Stress Values, ksi	Spec No.	Metal Temp. [Note (1)], °F, Not Exceeding	Allowable [Notes (2), (4)] Stress Values, ksi
B 443 Grade 1	300	27.5	B 443 Grade 2	100	25.0
B 444 Grade 1	400	26.8	B 444 Grade 2	200	24.6
B 446 Grade 1	500	26.1	B 446 Grade 2	300	24.0
B 564	600	25.4	B 366 (made	400	22.5
B 366 (made	700	25.0	with Grade	500	21.7
with Grade	800	24.6	2 material)	600	21.0
1 material)	900	24.0		700	20.7
	1,000	23.7		800	20.1
	1,100	23.4		900	19.8
	1,150	21.0		1,000	19.6
	1,200	13.2		1,100	19.3
				1,150	19.3
				1,200	19.3

NOTES:

(1) Alloy 625 suffers severe loss of impact strength after longtime aging in the temperature range 1,000°F–1,400°F.

(2) These stress values may be interpolated to determine values for intermediate temperatures.

(3) Allowable stresses are based on 110,000 psi tensile strength, the minimum strength for annealed material (Grade 1).

(4) Allowable stresses are based on 100,000 psi tensile strength, the minimum strength for solution annealed material (Grade 2).

Copyright ASME International
Provided by IHS under license with ASME
No reproduction or networking permitted without license from IHS Not for Resale

B31 CASE 153
Use of Alloy UNS S31803 Material in ASME B31.1 Construction

Approval Date: November 1989

Reaffirmation Date: February 18, 2004
This case shall expire on November 30, 2007, unless previously annulled or reaffirmed

Inquiry: May solution annealed austenitic–ferritic stainless steel, 22Cr–5½Ni–3Mo alloy (UNS S31803), materials be used in ASME B31.1 construction?

Reply: The product specifications shown in Table 1 for solution annealed ferritic–austenitic steel, 22Cr–5½Ni–3Mo alloy, may be used in the construction of power piping complying with the rules of ASME B31.1, provided the following additional requirements are met:

(a) These materials shall not be used for Boiler External Piping. See para. 100.1.2(A).

(b) Material shall be furnished in the heat treated condition. The heat treatment shall be performed at 1870°F to 2010°F with subsequent quenching in water or rapid cooling by other means.

(c) The allowable stress values shall be as follows:

For Metal Temperature Not Exceeding, °F	Max. Allowable Stress Values, ksi
100	22.5
200	22.5
300	21.7
400	20.9
500	20.4
600	20.2

(d) All longitudinal weld joints shall be completely examined by radiography. Radiographic examination shall be in accordance with the requirements of the ASME Boiler and Pressure Vessel Code, Section VIII, latest Edition, UW-51.

(e) The Welding Procedure Qualification and Performance Qualifications shall be conducted in accordance with Section IX. For qualifying welding procedures, the material shall be considered as P-No. 10H Gr. No. 1 of QW-422.

(f) Heat treatment after forming or fabrication is neither required nor prohibited [except as noted in para. (7)(e)], but any heat treatment applied shall be performed at 1870°F to 2010°F, followed by a rapid cool.

(g) Plate may be made into longitudinally welded pipe with filler metal added. Requirements of A 790 shall be met with the following modifications.

(1) The welds shall be made by an electric arc process involving the deposition of filler metal.

Table 1 ASTM Product Specifications

Piping	A 790-87
Tubing	A 789-87
Forgings	A 182-87
Plate, Sheet, and Strip	A 240-87
Bars and Shapes	A 276-87
Wrought Piping Fittings	A 815-86

(2) The joints shall be full penetration double-welded or single-welded butt joints employing fusion welding processes, as defined under "Definitions," ASME Boiler and Pressure Vessel Code, Section IX. Where backing rings or strips are employed, the ring or strip material shall be of the same P-Number (QW-422 of Section IX) as the plate being joined. Backing rings or strips shall be completely removed after welding, prior to any required radiography, and the exposed weld surface shall be examined visually for conformance to the requirements of the following paragraph. Welds made by procedures employing backing rings which remain in place are prohibited.

(3) The weld surface on the O.D. side of the pipe shall be flush with the base plate or shall have a reasonably uniform crown in accordance with Table 127.4.2 in the Code. The weld surface on the I.D. side of the reinforcement may be removed at the manufacturer's option or by agreement between the manufacturer and purchaser. The contour of the reinforcement shall be reasonably smooth and free of irregularities. The deposited metal shall be fused uniformly into the plate surface. No concavity of contour is permitted unless the resulting thickness of the weld metal is equal to or greater than the minimum thickness of the adjacent base metal.

(4) Weld defects shall be repaired by removal to sound metal and rewelding. Subsequent heat treatment and inspection shall be as required on the original welds.

(5) All welding shall be done prior to heat treatment. After welding, solution heat treatment shall be in accordance with para. 2.

(h) CAUTIONARY NOTE: This Case allows the use of this material only for the temperature range given in para. (3). This material may be expected to exhibit embrittlement at room temperature after service above 600°F.

Copyright ASME International
Provided by IHS under license with ASME
No reproduction or networking permitted without license from IHS
Not for Resale

B31 CASE 162
Use of 21Cr–11Ni–N Alloy (S30815) for ASME B31.1 Construction

Approval Date: September 1992

Reaffirmation Date: February 18, 2004
This case shall expire on September 30, 2007, unless previously annulled or reaffirmed

Inquiry: May solution annealed 21Cr–11Ni–N Alloy (S30815) seamless tubes and pipes, welded tubes and pipes, plate, sheet, strip, forging, and bar, conforming to the specifications of A 213, A 312, A 249, A 358, A 409, A 240, A 182 and A 479 be used in ASME B31.1 construction?

Reply: It is the opinion of the Committee that solution annealed 21Cr–11Ni–N Alloy (UNS S30815) seamless tubes and pipes, welded tubes and pipes, plate, sheet, strip, forging, and bar as described in the Inquiry may be used in ASME B31.1 construction provided:

(a) the material meets the chemical analysis and minimum tensile requirements detailed in the specification and noted here in Tables 1 and 2, respectively; otherwise conforming to all other requirements of the respective ASTM material specification;

(b) the maximum allowable design stress values shall be as given in Table 3, except that for welded tube and pipe, a joint efficiency factor, E_j, of 0.85 shall be used;

(c) welding shall be performed using any welding process or combination of processes capable of meeting the requirements of Section IX for P-No. 8, Group No. 2 materials. If postweld heat treatment is performed, the material shall be heated to 1,560°F to 1,740°F for 10 min to 15 min, followed by cooling in air.

Table 1 Chemical Requirements

Element	Percent
Carbon	0.05–0.10
Manganese, max	0.80
Phosphorus, max	0.40
Sulphur, max	0.030
Silicon	1.40–2.00
Nickel	10.0–12.0
Chromium	20.0–22.0
Nitrogen	0.14–0.20
Cerium	0.03–0.08
(Balance Iron)	

Table 2 Mechanical Property Requirements

Tensile strength, min, ksi	87
Yield strength, 0.2% offset min, ksi	45
Elongated in 2 in. min, %	40

(d) heat treatment after forming is neither required nor prohibited. If heat treatment is used, the solution treatment shall consist of heating to a temperature of 1,920°F to 2,100°F and quenching in water or rapidly cooling by other means.

(e) this Case number shall be referenced in the documentation and marking of the material and recorded on the Manufacturer's Data Report.

Copyright ASME International
Provided by IHS under license with ASME
No reproduction or networking permitted without license from IHS
Not for Resale

Table 3

For Metal Temperature Not Exceeding, °F	Max. Allowable Stress Values, ksi		For Metal Temperature Not Exceeding, °F	Max. Allowable Stress Values, ksi	
	...	Note (1)		...	Note (1)
100	21.8	21.8	1050	11.6	11.6
200	21.6	21.6	1100	9.0	9.0
300	20.4	20.4	1150	6.9	6.9
400	19.6	19.6	1200	5.2	5.2
500	18.4	19.1	1250	4.0	4.0
600	17.7	18.7	1300	3.1	3.1
650	17.5	18.6	1350	2.4	2.4
700	17.3	18.4	1400	1.9	1.9
750	17.1	18.2	1450	1.6	1.6
800	16.8	18.0	1500	1.3	1.3
850	16.6	17.8	1550	1.0	1.0
900	16.3	17.5	1600	0.86	0.86
950	16.1	17.2	1650	0.71	0.71
1000	14.9	14.9			

NOTE:

(1) Due to the relatively low yield strength of these materials, these higher stress values were established at temperatures where the short time tensile properties govern to permit the use of these alloys where slightly greater deformation is acceptable. These higher stress values exceed 67%, but do not exceed 90% of the yield strength at temperature. Use of these stresses may result in dimensional changes due to permanent strain. These stress values are not recommended for flanges of gasketed joints or other applications where slight amounts of distortion can cause leakage or malfunction.

Copyright ASME International
Provided by IHS under license with ASME
No reproduction or networking permitted without license from IHS
Not for Resale

B31 CASE 163
Use of Ni–Cr–Co–Mo Alloy (UNS N06617) for ASME B31.1 Construction

Approval Date: July 1994

Reaffirmation Date: February 18, 2004
This case shall expire on July 31, 2006, unless previously annulled or reaffirmed

Inquiry: May solution annealed Ni–Cr–Co–Mo alloy (UNS N06617) wrought plate, sheet, rod, bar, forgings, welded pipe, and seamless tube that meet the chemical composition requirements given in Table 1, the mechanical property requirements given in Table 2, and that further meet all other applicable requirements of the specifications listed in Table 3 be used in ASME B31.1, welded construction at temperatures up to and including 1,500°F?

Reply: It is the opinion of the Committee that solution annealed Ni–Cr–Co–Mo alloy (UNS N06617) as described in the Inquiry may be used for construction, provided that all applicable requirements of ASME B31.1 and the following additional requirements are met.

(a) This material shall not be used for boiler external piping. See para. 100.1.2(A).

(b) Material shall be solution annealed at a temperature of 2100°F–2250°F and quenched in water or rapidly cooled by other means.

(c) The maximum allowable stress values for the material shall be those given in Table 4. For welded components, these values shall be multiplied by a factor of 0.85, except when 100% radiography is performed as noted in para. 136.4.5.

(d) Separate welding procedures and performance qualifications shall be required for this material. The welding procedure qualifications and performance qualification shall be conducted as prescribed in Section IX of the ASME Boiler and Pressure Vessel Code.

(e) Heat treatment after forming or fabrication is neither required nor prohibited. When heat treatment is performed, it shall be in accordance with (b) above.

(f) For external pressure design, refer to para. 104.1.3.

(g) For para. 104.1.2, which requires a temperature dependent parameter *y,* the *y* values are the same as nickel alloys listed in Table 104.1.2(A) and shall be as follows:

1,150°F and below	$y = 0.4$
1,200°F	$y = 0.5$
1250°F and above	$y = 0.7$

(h) Pressure parts machined from bar shall be restricted to NPS 4 or smaller. Hubbed flanges, elbows, return bends, tees, and header tees shall not be machined directly from bar stock.

Table 1 Chemical Requirements

Element	Percent
Carbon	0.05–0.15
Manganese, max.	1.0
Silicon, max.	1.0
Sulfur, max.	0.015
Iron, max.	3.0
Chromium	20.00–24.00
Cobalt	10.0–15.0
Molybdenum	8.0–10.0
Aluminum	0.8–1.5
Titanium, max.	0.6
Copper, max.	0.5
Boron, max.	0.006
Nickel, min.	44.5

Table 2 Mechanical Property Requirements

Tensile strength, min., ksi	95
Yield strength, min., ksi	35
Elongation in 2 in. or 4 diameters, min., %	35

Table 3 Product Specifications

Rod and bar	B 166
Plate, sheet, and strip	B 168
Tube	B 444
Forgings	B 564
Welded pipe	B 546

Copyright ASME International
Provided by IHS under license with ASME
No reproduction or networking permitted without license from IHS
Not for Resale

Table 4

For Metal Temperature Not Exceeding, °F	Maximum Allowable Stress, ksi	Maximum Allowable Stress, ksi [Note (1)]
100	23.3	23.3
200	20.5	23.3
300	19.1	23.3
400	18.1	23.3
500	17.3	23.3
600	16.7	22.5
700	16.2	21.9
800	15.9	21.5
900	15.7	21.1
1,000	15.5	20.9
1,100	15.4	20.7
1,150	15.4	20.7
1,200	15.3	16.9
1,250	13.0	13.0
1,300	10.0	10.0
1,350	7.7	7.7
1,400	6.0	6.0
1,450	4.6	4.6
1,500	3.6	3.6

NOTE:

(1) Due to the relatively low yield strength of this material, these higher stress values were established at temperatures where the short time tensile properties govern to permit the use of these alloys where slightly greater deformation is acceptable. These higher stress values exceed 67%, but do not exceed 90% of the yield strength at temperature. Use of these stresses may result in dimensional changes due to permanent strain. These stress values are not recommended for flanges of gasketed joints or other applications where slight amounts of distortion can cause leakage or malfunction.

Copyright ASME International
Provided by IHS under license with ASME
No reproduction or networking permitted without license from IHS
Not for Resale

B31 CASE 165
Use of Alloy S32550 (25.5Cr–5.5Ni–3.5Mo–Cu), P-No. 10H in ASME B31.1 Construction

Approval Date: July 1995

Reaffirmation Date: February 18, 2004
This Case shall expire on July 31, 2007, unless previously annulled or reaffirmed

Inquiry: May Alloy S32550 (25.5Cr–5.5Ni–3.5Mo–Cu), P-No. 10H, be used in power piping applications constructed in accordance with the B31.1 Code at temperatures up to and including 500°F?

Reply: Alloy S32550 may be used for ASME B31.1 construction to the specifications noted in this Code Case provided that all of the following requirements are met.

(a) THESE MATERIALS ARE NOT ACCEPTABLE FOR USE ON BOILER EXTERNAL PIPING — SEE PARA. 100.1.2.

(b) All applicable requirements of ASME B31.1 shall be met.

(c) Allowable stress values shown in Table 1 shall not be exceeded. These materials shall not be used at temperatures above those for which allowable stress values are given in this Code Case.

(d) All openings 4 in. and larger shall conform to para. 127.4.8 except that full penetration welds shall be used and separate reinforcing pads shall not be used.

(e) Butt weld joints shall be examined radiographically for their full length as prescribed in para. 136.4.5 when the wall thickness at the weld joint exceeds $1\frac{1}{2}$ in.

(f) Branch connection welds shall be radiographically (para. 136.4.5) or U.T. (para. 136.4.6) examined. See Table 136.4 when the size of the branch exceeds NPS 4.

(g) All welds where material thickness exceeds $\frac{3}{4}$ in. shall be examined by the liquid penetrant method.

(h) Pipe under external pressure shall meet requirements of para. 104.1.3.

(i) Heat treatment of product form is neither required nor prohibited but if performed shall be done in accordance with respective product specifications. See Table 132.

(j) Charpy impact testing shall be done in accordance with requirements of UHA-51(c)(2) when material wall thickness is greater than $\frac{3}{8}$ in.

Table 1

Spec. No.	Notes	Specified Minimum Tensile, ksi	Maximum Allowable Stress Values in Tension, ksi, for Metal Temperature up to and Including 500°F. [Note (1)]				
			−20 to 100	200	300	400	500
Seamless Pipe and Tube							
A789	...	110	27.5	27.4	25.7	24.7	24.7
A790	...	110	27.5	27.4	25.7	24.7	24.7
Welded Pipe and Tube							
A789	(2)	110	23.4	23.3	21.9	21.0	21.0
A790	(2)	110	23.4	23.3	21.9	21.0	21.0
Plate							
A240	...	110	27.5	27.4	25.7	24.7	24.7
Bar							
A479	...	110	27.5	27.4	25.7	24.7	24.7

NOTES:
(1) This steel may be expected to develop embrittlement after exposure to temperatures above 500°F for prolonged times. See ASME Boiler and Pressure Vessel Code, Section VIII, Division 1, UHA-109.
(2) A factor of 0.85 has been applied in arriving at the maximum allowable stress values in tension for this material. Divide tabulated values by 0.85 for maximum allowable longitudinal tensile stress.

Copyright ASME International
Provided by IHS under license with ASME
No reproduction or networking permitted without license from IHS
Not for Resale

B31 CASE 171
Alternative Rules for Heat Treatment of Boiler External Piping

Approval Date: January 2001

Reaffirmation Date: February 18, 2004
This Case shall expire on January 31, 2007, unless previously annulled or reaffirmed

Inquiry: May a Certificate Holder who assembles boiler external piping apply Section I preheat and PWHT requirements to boiler external piping in lieu of ASME B31.1 requirements?

Reply: It is the opinion of the Committee that any holder of the ASME S, A, or PP Symbol Stamp and Certificate of Authorization may apply the preheat and PWHT requirements of Section I to boiler external piping in lieu of the corresponding requirements of B31.1

This Case number shall be identified in the Manufacturer's Data Report Form.

Copyright ASME International
Provided by IHS under license with ASME
No reproduction or networking permitted without license from IHS
Not for Resale

B31 CASE 173-1
Alternative Maximum Allowable Stresses Based on a Factor of Safety 3.5 on Tensile Strength for ASME B31.1 Construction

Approval Date: September 12, 2003
This Case shall expire on September 1, 2007, unless previously annulled or reaffirmed

Inquiry: New maximum allowable stresses based ona factor of 3.5 on tensile strength and the other existing B31.1 criteria for establishing maximum allowable stresses are under development for incorporation into the B31.1 Code. Until the development and incorporation of new maximum allowable stresses into B31.1 are completed may alternative allowable stresses be used?

Reply: It is opinion of the committee that allowable stresses other than those listed in B31.1, Appendix A may be used for B31.1 construction provided the following requirements are met.

(a) The materials shall be limited to ASTM materials listed in Table 126.1 that have a corresponding ASME material, as allowed by B31.1, para. 123.1(D).

(b) Boiler External Piping shall use Maximum Allowable Stress Value provided in ASME BPVC Section II, Part D (1999 Addenda), Tables 1A and 1B, as permitted for Section I design. Only ASME materials shall be used.

(c) Nonboiler External Piping shall use Maximum Allowable Stress Values provided in either ASME BPVC Section II, part D, (1999 Addenda), Tables 1A and 1B as permitted for Section I design; or ASME BPVC Section II, Part D (1999 Addenda), Tables 1A and 1B as permitted for Section VIII, Divison 1 design.

(d) When calculating the allowable expansion stress range, S_A Eq. (1) of para. 102.3.2(C) and Eq. (13) of para. 104.8.3 S_c and S_h shall not exceed 20,000 psi.

(e) This Case number and the materials for which it applies shall be shown on the Manufacturer's Data Report (if applicable).

Copyright ASME International
Provided by IHS under license with ASME
No reproduction or networking permitted without license from IHS
Not for Resale

B31 CASE 174
PWHT Exemptions for P-No. 1 Materials for ASME B31.1 Construction

Approval Date: September 12, 2003
This Case shall expire on September 1, 2007, unless previously annulled or reaffirmed

Inquiry: Under what conditions may an additional exemption to postweld heat treatment be tkaen for P-No. 1 materials used for ASME B31.1 construction?

Reply: An additional exemption may be taken for material up to a nominal thickness of 1.5 in. (38.0 mm) provided all of the following conditions are met.

(a) Only girth, branch, fillet, and attachment welds may exempted.

(b) A maximum carbon content of 0.30% on the pressure containing material.

(c) A minimum preheat of 200°F (95°C) is applied when the nominal material thickness of either of the base metals exceeds 1 in. (25.0 mm).

(d) If SMAW is used, the electrode shall be the low hydrogen type.

(e) If FCAW is used, a shielding gas shall be used.

(f) If SAW is used, a neutral flux shall be used.

(g) The welding procedure specification shall be qualified in accordance with ASME Section IX using the maximum thickness to be exempted or, 1.5 in. (38 mm).

(h) The welding procedure shall be qualified with Charpy V-notch impact testing at the lowest service temperature or 40°F (5°C), whichever is less. Testing shall be performed in accordance with ASME Section VIII, UG-84. All specimens shall be oriented in the same direction. The average of three specimens for the weld metal, heat affected zone, and base material shall not be less than 15 ft-lb with no single specimen less than 10 ft-lb. The average for the heat affected zone specimens shall equal or exceed the average result for the base material.

(i) All girth and branch welds shall be examined by RT or UT and fillet, attachment and seal welds shall be examined by PT or MT.

(j) All welds shall be hydrostatically tested.

Copyright ASME International
Provided by IHS under license with ASME
No reproduction or networking permitted without license from IHS
Not for Resale

B31 CASE 175
ASTM B16 (UNS C36000) and B453 (UNS C35300) in ASME B31.1 Construction

Approval Date: September 12, 2003
This Case shall expire on September 1, 2007, unless previously annulled or reaffirmed

Inquiry: May brass alloys rod and bars conforming to ASTM B16 (UNS C36000) and B453 (UNS C35300) be used for ASME B31.1 construction?

Reply: It is the opinion of the Committee that brass alloys rods and bars conforming to ASTM B16 (UNS C36000) and B453 (UNS C35300) may be used for B31.1 construction provided:

(a) These materials shall not be used for boiler external piping except where specifically permitted by Section I. See para. 100.1.2(A).

(b) The maximum permissible design temperature shall not exceed 406°F (208°C).

(c) The maximum permissible size of finished product shall not exceed NPS 3.

(d) These materials shall not be welded.

(e) These materials shall be used only in the soft anneal (O60) temper.

(f) Limitations for use of these materials for flammable liquids and gases shall be in accordance with paras. 122.7, 122.8, and 124.7.

(g) Material conforming to ASTM B16 Alloy UNS C36000 shall not be used in primary pressure relief valve applications.

(h) A representative finished model of each product size and design shall be tested to determine the presence of residual stresses which might result in failure of individual parts due to stress corrosion cracking. Tests shall be conducted in accordance with ASTM B154 or ASTM B858M.

(i) Materials shall be tested to determine the presence of residual stresses which might result in failure of individual parts due to stress corrosion cracking. Tests shall be conducted in accordance with ASTM B154 or ASTM B858M. The test frequency shall be as specified in B249.

(j) Heat treatment after fabrication or forming is neither required nor prohibted.

(k) The allowable stress values shown in Table 1 shall apply. These allowable stress values are based on an tensile strength factor of safety 4.0. These stress values may be interpolated to determine values for intermediate temperatures.

(l) The specified minimum tensile and yield strengths shown in Table 1 shall apply.

(m) This Case number shall be refrenced in the documentation and marking of the material and recorded on the Manufacturer's Data Report.

Table 1

Spec. No.	UNS Alloy No.	Size or Thickness, in.	Specified Minimum Tensile, ksi	Specified Minimum Yield, ksi	*E* or *F*	Maximum Allowable Stress Values in Tension, ksi, for Metal Temperature, °F, Not Exceeding							
						−20 to 100	150	200	250	300	350	400	450
Rod													
B 16	C36000	1 and under	48	20	1.00	13.3	12.6	12.0	11.5	11.1	10.7	5.3	2.0
	C36000	> 1 to 2	44	18	1.00	12.0	11.3	10.8	10.4	10.0	9.7	5.3	2.0
	C36000	Over 2	40	15	1.00	10.0	9.4	9.0	8.7	8.3	8.1	5.3	2.0
B 453	C35300	Under ½	46	16	1.00	10.7	10.1	9.6	9.2	8.9	8.6	5.3	2.0
	C35300	½ to 1	44	15	1.00	10.0	9.4	9.0	8.7	8.3	8.1	5.3	2.0
	C35300	Over 1	40	15	1.00	10.0	9.4	9.0	8.7	8.3	8.1	5.3	2.0
Bar													
B 16	C36000	1 and under	44	18	1.00	12.0	11.3	10.8	10.4	10.0	9.7	5.3	2.0
	C36000	Over 1	40	15	1.00	10.0	9.4	9.0	8.7	8.3	8.1	5.3	2.0

Copyright ASME International
Provided by IHS under license with ASME
No reproduction or networking permitted without license from IHS
Not for Resale

B31 CASE 176
Use of 20Cr-18-Ni-6Mo (UNS S31254) for ASME B31.1 Constructions

Approval Date: September 12, 2003
This Case shall expire on September 1, 2007, unless previously annulled or reaffirmed

Inquiry: May UNS S31254 material in the form of Bar and Fittings be used in ASME B31.1 power piping systems?

Reply: UNS S31254 material conforming to ASTM A-479 (Bar), and A-403 (Fittings) may be used for B31.1 construction provided that the following requirements are met.

(a) This material is not acceptable for use in Boiler External Piping.

(b) All the applicable requirements of ASME B31.1 shall be met.

(c) The material shall meet the chemical composition in Table 1.

(d) The allowable stress values shown in Table 2 shall apply.

(e) The material shall conform to one of the product specifications listed in Table 3.

(f) The metal shall be considered as P-No. 8 for welding. Heat treatment after forming or welding is neither required nor prohibited. However, if heat treatment is applied, the solution annealing treatment shall consist of heating to a minimum temperature of 2100°F (1 150°C), and then quenching the water, or rapidly cooling by other means.

Table 1

Element	Heat Analysis Limit, % Wt.
Carbon	0.20 max.
Manganese	1.00 max.
Silicon	0.80 max.
Phosphorus	0.030 max.
Sulfur	0.010 max.
Chromium	19.50 to 20.50
Nickel	17.50 to 18.50
Molybdenum	6.0 to 6.5
Nitrogen	0.18 to 0.22
Iron [Note (1)]	Balance

NOTE:
(1) Element shall be determined arithmetically by difference.

(g) The material described in this Inquiry is one of the highest tensile strength materials approved for use in ASME pressure component applications. The ASME materials database has little fatigue data on these materials. When calculating the allowable expansion stress range S_A, using Eq. (1) in para. 102.3.2(C) the allowable stress for A-106 Grade B shall be used. Further, fittings manufactured using this material shall be fatigue tested to assure comparable behavior with ASME materials to be used in the installed assemblies.

Copyright ASME International
Provided by IHS under license with ASME
No reproduction or networking permitted without license from IHS
Not for Resale

Table 2 Maximum Allowable Stress Values in Tension, ksi

Spec. No.	P-No.	*E*	−20 to 100	200	300	400	500	600	650	700	750
Bar											
A 479	8	1.00	23.5	23.5	21.4	19.9	18.5	17.9	17.7	17.5	17.3
A 479 [Note (1)]	8	1.00	23.5	23.5	22.4	21.3	20.5	20.1	19.9	19.9	19.8
Fittings, WP and WP-WX											
A 403	8	1.00	23.5	23.5	21.4	19.9	18.5	17.9	17.7	17.5	17.3
A 403 [Note (1)]	8	1.00	23.5	23.5	22.4	21.3	20.5	20.1	19.9	19.9	19.8
Fittings, WP-W and WP-WU											
A 403	8	0.85	20.0	20.0	18.2	16.9	15.7	15.2	15.0	14.9	14.7
A 403 [Note (1)]	8	0.85	20.0	20.0	19.0	18.1	17.4	17.1	16.9	16.9	19.8

GENERAL NOTES:

(a) Minimum tensile strength = 94 ksi.

(b) Minimum yield strength = 44 ksi.

NOTE:

(1) Due to the relatively low yield strength of these materials, these higher stress values were established at temperatures where the short time tensile properties govern to permit the use of these alloys where slightly greater deformation is acceptable. The stress values in this range exceed $66\frac{2}{3}$%, but do not exceed 90% of the yield strength at temperature. Use of these stresses may result in dimensional changes due to permanent strain. These stress values are not recommended for the flanges of gasketed joints or other applications where slight amounts of distortion can cause leakage or malfuntion.

Table 3 Product Specification

Spec. No.	Product Type
A 403	Fitting, Seamless, and Welded
A 479	Bar

Copyright ASME International
Provided by IHS under license with ASME
No reproduction or networking permitted without license from IHS Not for Resale

B31 CASE 177
Alternate Rules for Preheat of P No. 5B Materials

Approval Date: September 12, 2003
This Case shall expire on September 1, 2007, unless previously annulled or reaffirmed

Inquiry: May the nominal preheat temperature for P No. 5B materials be reduced to 200°F, during root examination, without performing an Intermediate Heat Treatment as required by para. 131.6.1(C)?

Reply: Yes, the preheat tempterature for P No. 5B materials may be reduced to 200°F (minimum), during root examination without performing an Intermediate Heat Treatment as required by para. 131.6.1(C), provided the following conditions are met.

(a) A minimum of at least $\frac{3}{8}$ in. thickness of weld is deposited or 25% of the welding groove is filled, whichever is less (the weldment shall be sufficiently supported to prevent overstressing the weld if the weldment is to be moved or otherwise loaded).

(b) After cooling to 200°F minimum, and before welding is resumed, visual examinations of the weld shall be performed to assure that no cracks have formed.

(c) The required preheat of para. 131.4.5 shall be applied before welding is resumed.

Copyright ASME International
Provided by IHS under license with ASME
No reproduction or networking permitted without license from IHS
Not for Resale

Copyright ASME International
Provided by IHS under license with ASME
No reproduction or networking permitted without license from IHS
Not for Resale

ASME CODE FOR PRESSURE PIPING, B31

Power Piping B31.1-2004
Fuel Gas Piping . . . . . B31.2[1]-1968
Process Piping B31.3-2002
Pipeline Transportation Systems for Liquid Hydrocarbons and Other Liquids B31.4-2002
Refrigeration Piping and Heat Transfer Components B31.5-2001
Gas Transmission and Distribution Piping Systems B31.8-2003
Building Services Piping B31.9-1996
Slurry Transportation Piping Systems B31.11-2002
Manual for Determining the Remaining Strength of Corroded Pipelines: ASupplement to ASME B31 Code for Pressure Piping . . . B31G-1991

NOTE:
(1) USAS B31.2-1968 was withdrawn as an American National Standard on February 18, 1988. ASME will continue to make available USAS B31.2-1968 as a historical document for a period of time.

The ASME Publications Catalog shows a complete list of all the Standards published by the Society. For a complimentary catalog, or the latest information about our publications, call 1-800-THE-ASME (1-800-843-2763).

--`,,```,,,,````-`-`,,`,,`,`,,`---

Copyright ASME International
Provided by IHS under license with ASME
No reproduction or networking permitted without license from IHS

Not for Resale

ASME Services

ASME is committed to developing and delivering technical information. At ASME's Information Central, we make every effort to answer your questions and expedite your orders. Our representatives are ready to assist you in the following areas:

ASME Press
Codes & Standards
Credit Card Orders
IMechE Publications
Meetings & Conferences
Member Dues Status
Member Services & Benefits
Other ASME Programs
Payment Inquiries
Professional Development
Short Courses
Publications
Public Information
Self-Study Courses
Shipping Information
Subscriptions/Journals/Magazines
Symposia Volumes
Technical Papers

How can you reach us? It's easier than ever!

There are four options for making inquiries* or placing orders. Simply mail, phone, fax, or E-mail us and an Information Central representative will handle your request.

Mail
ASME
22 Law Drive, Box 2900
Fairfield, New Jersey
07007-2900

Call Toll Free
US & Canada: 800-THE-ASME
(800-843-2763)
Mexico: 95-800-THE-ASME
(95-800-843-2763)
Universal: 973-882-1167

Fax—24 hours
973-882-1717
973-882-5155

E-Mail—24 hours
Infocentral@asme.org

* Information Central staff are not permitted to answer inquiries about the technical content of this code or standard. Information as to whether or not technical inquiries are issued to this code or standard is shown on the copyright page. All technical inquiries must be submitted in writing to the staff secretary. Additional procedures for inquiries may be listed within.

Copyright ASME International
Provided by IHS under license with ASME
No reproduction or networking permitted without license from IHS
Not for Resale

ASME B31.1-2004

ISBN 0-7918-2926-X





A05804

Copyright ASME International
Provided by IHS under license with ASME
No reproduction or networking permitted without license from IHS

Not for Resale