ASME B30.23-2005

(Revision of ASME B30.23-1998)

Personnel Lifting Systems

Safety Standard for Cableways, Cranes, Derricks, Hoists, Hooks, Jacks, and Slings

AN AMERICAN NATIONAL STANDARD



The American Society of Mechanical Engineers

--`,,```,,,,````-`-`,,`,,`,`,,`---

Copyright ASME International
Provided by IHS under license with ASME
No reproduction or networking permitted without license from IHS

Not for Resale

ASME B30.23-2005

(Revision of ASME B30.23-1998)

Personnel Lifting Systems

Safety Standard for Cableways, Cranes, Derricks, Hoists, Hooks, Jacks, and Slings

AN AMERICAN NATIONAL STANDARD



The American Society of Mechanical Engineers

Three Park Avenue • New York, NY 10016

Copyright ASME International
Provided by IHS under license with ASME
No reproduction or networking permitted without license from IHS

Not for Resale

Date of Issuance: January 25, 2006

The next edition of this Standard is scheduled for publication in 2010. There will be no addenda issued to this edition.

ASME issues written replies to inquiries concerning interpretations of technical aspects of this Standard. Interpretations are published on the ASME Web site under the Committee Pages at http://www.asme.org/codes/ as they are issued, and are also published within this edition of the Standard.

ASME is the registered trademark of The American Society of Mechanical Engineers.

This code or standard was developed under procedures accredited as meeting the criteria for American National Standards. The Standards Committee that approved the code or standard was balanced to ensure that individuals from competent and concerned interests have had an opportunity to participate. The proposed code or standard was made available for public review and comment that provides an opportunity for additional public input from industry, academia, regulatory agencies, and the public-at-large.

ASME does not "approve," "rate," or "endorse" any item, construction, proprietary device, or activity.

ASME does not take any position with respect to the validity of any patent rights asserted in connection with any items mentioned in this document, and does not undertake to insure anyone utilizing a standard against liability for infringement of any applicable letters patent, nor assume any such liability. Users of a code or standard are expressly advised that determination of the validity of any such patent rights, and the risk of infringement of such rights, is entirely their own responsibility.

Participation by federal agency representative(s) or person(s) affiliated with industry is not to be interpreted as government or industry endorsement of this code or standard.

ASME accepts responsibility for only those interpretations of this document issued in accordance with the established ASME procedures and policies, which precludes the issuance of interpretations by individuals.

No part of this document may be reproduced in any form,
in an electronic retrieval system or otherwise,
without the prior written permission of the publisher.

The American Society of Mechanical Engineers
Three Park Avenue, New York, NY 10016-5990

Copyright © 2006 by
THE AMERICAN SOCIETY OF MECHANICAL ENGINEERS
All rights reserved
Printed in U.S.A.

Copyright ASME International
Provided by IHS under license with ASME
No reproduction or networking permitted without license from IHS

Not for Resale

CONTENTS

Foreword iv
Committee Roster v
Introduction vii
Summary of Changes x

Chapter 23-0 Scope, Definitions, and References 1
Section 23-0.1 Scope of B30.23 1
Section 23-0.2 Intent of B30.23 1
Section 23-0.3 Definitions 1
Section 23-0.4 References 2

Chapter 23-1 Construction and Characteristics 3
Section 23-1.1 Design 3
Section 23-1.2 Construction 5

Chapter 23-2 Inspection, Testing, and Maintenance 6
Section 23-2.1 Inspection 6
Section 23-2.2 Testing 6
Section 23-2.3 Maintenance 7

Chapter 23-3 Operation 8
Section 23-3.1 Personnel 8
Section 23-3.2 Practices 9

Mandatory Appendices
I Lifting Personnel Near Electrical Power Lines 13
II Personnel Platform Lift Planning and Authorization Form 18
III Personnel Lift Platform Pre-Lift Inspection 19

Copyright ASME International
Provided by IHS under license with ASME
No reproduction or networking permitted without license from IHS
Not for Resale

FOREWORD

This American National Standard, Safety Standard for Cableways, Cranes, Derricks, Hoists, Hooks, Jacks, and Slings, has been developed under the procedures accredited by the American National Standards Institute (formerly the United States of America Standards Institute). This Standard had its beginning in December 1916 when an eight-page Code of Safety Standards for Cranes, prepared by an ASME Committee on the Protection of Industrial Workers, was presented to the annual meeting of the ASME.

Meetings and discussions regarding safety on cranes, derricks, and hoists were held from 1920 to 1925, involving the ASME Safety Code Correlating Committee, the Association of Iron and Steel Electrical Engineers, the American Museum of Safety, the American Engineering Standards Committee (later changed to American Standards Association and subsequently to the USA Standards Institute), Department of Labor — State of New Jersey, Department of Labor and Industry — State of Pennsylvania, and the Locomotive Crane Manufacturers Association. On June 11, 1925, the American Engineering Standards Committee approved the ASME Safety Code Correlating Committee's recommendation and authorized the project with the U.S. Department of the Navy, Bureau of Yards and Docks, and ASME as sponsors.

In March 1926, invitations were issued to 50 organizations to appoint representatives to a Sectional Committee. The call for organization of this Sectional Committee was sent out October 2, 1926, and the committee organized November 4, 1926, with 57 members representing 29 national organizations. The Safety Code for Cranes, Derricks, and Hoists, ASA B30.2-1943, was created from the eight-page document referred to in the first paragraph. This document was reaffirmed in 1952 and widely accepted as a safety standard.

Due to changes in design, advancement in techniques, and general interest of labor and industry in safety, the Sectional Committee, under the joint sponsorship of ASME and the Naval Facilities Engineering Command, U.S. Department of the Navy, was reorganized as an American National Standards Committee on January 31, 1962, with 39 members representing 27 national organizations.

The format of the previous code was changed so that separate volumes (each complete as to construction and installation; inspection, testing, and maintenance; and operation) would cover the different types of equipment included in the scope of B30.

In 1982, the Committee was reorganized as an Accredited Organization Committee, operating under procedures developed by ASME and accredited by the American National Standards Institute.

This Standard presents a coordinated set of rules that may serve as a guide to government and other regulatory bodies and municipal authorities responsible for the guarding and inspection of the equipment falling within its scope. The suggestions leading to accident prevention are given both as mandatory and advisory provisions; compliance with both types may be required by employers of their employees.

In case of practical difficulties, new developments, or unnecessary hardship, the administrative or regulatory authority may grant variances from the literal requirements or permit the use of other devices or methods but only when it is clearly evident that an equivalent degree of protection is thereby secured. To secure uniform application and interpretation of this Standard, administrative or regulatory authorities are urged to consult the B30 Committee, in accordance with the format described in Section III, before rendering decisions on disputed points.

This volume of the Standard, which was approved by the B30 Committee and ASME, was approved by ANSI and designated as an American National Standard on December 13, 2005.

Safety codes and standards are intended to enhance public safety. Revisions result from committee consideration of factors, such as technological advances, new data, and changing environmental and industry needs. Revisions do not imply that previous editions were inadequate.

Copyright ASME International
Provided by IHS under license with ASME
No reproduction or networking permitted without license from IHS
Not for Resale

ASME B30 STANDARDS COMMITTEE
Safety Standards for Cableways, Cranes, Derricks, Hoists, Hooks, Jacks, and Slings

(The following is the roster of the Committee at the time of approval of this Standard.)

STANDARDS COMMITTEE OFFICERS

P. S. Zorich, *Chair*
B. D. Closson, *Vice Chair*
J. D. Wendler, *Secretary*

STANDARDS COMMITTEE PERSONNEL

N. E. Andrew, Northrup Grumman Ship Systems
W. T. Hargrove, *Alternate,* Mantech International Corp.
R. E. Bluff, Gantry Constructors, Inc.
R. J. Bolen, Consultant
G. B. Hetherston, *Alternate,* E. I. Dupont
A. D. Brown, A. D. Brown, Inc.
D. Ritchie, *Alternate,* The Construction Safety Council
T. A. Christensen, Liberty Mutual Insurance/Alliance of American Insurers
M. W. Mills, *Alternate,* Liberty Mutual Group
B. D. Closson, Craft Forensic Services, Inc.
T. L. Blanton, *Alternate,* NACB Group, Inc.
S. Cloutier, U.S. Department of Labor
J. P. Colletti, John P. Colletti & Associates, Inc.
R. M. Lovgren, *Alternate,* Crane Partner International
R. A. Dahlin, Walker Magnetics Group
J. W. Downs, Jr., *Alternate,* Downs Crane and Hoist Co.
L. D. Demark, International Union of Operating Engineers
S. C. Buck, *Alternate,* International Union of Operating Engineers
D. W. Eckstine, Eckstine & Associates
R. J. Edwards, Schwing America
R. H. Fowler, U.S. Department of the Air Force
J. L. Franks, Consultant
R. C. Slater, *Alternate,* McKay International Engineering
J. L. Gordon, Acco Chain and Lifting Products
N. C. Hargreaves, Terex Corp./Power Crane & Shovel Association
E. D. Fidler, *Alternate,* Grove Worldwide
J. J. Headley, Crane Institute of America
R. M. Parnell, *Alternate,* Industrial Training International
C. W. Ireland, National Oilwell
A. J. Egging, *Alternate,* National Oilwell
L. S. Johnson, American Equipment Co.
E. P. Vliet, *Alternate,* Nichols Construction Co.
R. M. Kohner, Landmark Engineering Services
H. I. Shapiro, *Alternate,* Specialized Carriers and Rigging Association/Howard I. Shapiro & Associates
C. E. Lucas, The Crosby Group
P. A. Boeckman, *Alternate,* The Crosby Group
E. K. Marburg, Columbus McKinnon Corp.
M. G. Miller, *Alternate,* Columbus McKinnon Corp.
L. D. Means, Means Engineering and Consulting/Wire Rope Technical Board
D. M. Sleightholm, *Alternate,* Bridon American Corp.
K. J. Miller, Jacobs Engineering
D. W. Smith, *Alternate,* Chicago Bridge and Iron Co.
G. L. Owens, Granite Construction, Inc.
J. T. Perkins, Ingersoll-Rand
H. G. Leidich, *Alternate,* Ingersoll-Rand
J. E. Richardson, U.S. Department of the Navy
W. P. Rollins, Manitowoc Crane Group
M. Brunet, *Alternate,* Manitowoc Crane Group
J. W. Rowland III, Consultant
E. E. Rudy, U.S. Department of the Army
J. C. Ryan, BOH Bros. Construction
A. R. Ruud, *Alternate,* Atkinson Construction
D. Sayenga, Associated Wire Rope Fabricators
D. J. Bishop, *Alternate,* Bishop Lifting Products, Inc.
G. W. Shields, Caterpillar, Inc.
W. J. Smith, Jr., Maxim Crane Works
R. G. Strain, Advanced Automation Associates, Inc.
J. B. Hamill, *Alternate,* Advanced Automation Associates, Inc.
A. R. Toth, Morris Material Handling
B. E. Weir, Jr., Norris Brothers Co., Inc./National Erectors Association
J. Conant, *Alternate,* Conant Crane Rental Co.
J. D. Wendler, The American Society of Mechanical Engineers
R. C. Wild, U.S. Army Corps of Engineers
S. G. Testerman, *Alternate,* U.S. Army Corps of Engineers
D. N. Wolff, National Crane Corp.
A. L. Calta, *Alternate,* National Crane Corp.
P. S. Zorich, RZP International Ltd.

--`,,```,,,,````-`-`,,`,,`,`,,`---
Copyright ASME International
Provided by IHS under license with ASME
No reproduction or networking permitted without license from IHS
Not for Resale

HONORARY MEMBERS

J. M. Klibert, Lift-All Co., Inc.
R. W. Parry, Consultant

B30.23 SUBCOMMITTEE PERSONNEL

B. D. Closson, *Chair,* Craft Forensic Services, Inc.
A. D. Brown, A. D. Brown, Inc.
T. A. Christensen, Liberty Mutual Insurance/Alliance of American Insurers
H. B. Hayden, Hayden Enterprises
K. J. Miller, Jacobs Engineering
B. E. Weir, Jr., Norris Brothers Co., Inc./National Erectors Association
D. N. Wolff, National Crane Corp.

--`,,```,,,,````-`-`,,`,,`,`,,`---

Copyright ASME International
Provided by IHS under license with ASME
No reproduction or networking permitted without license from IHS
Not for Resale

SAFETY STANDARD FOR CABLEWAYS, CRANES, DERRICKS, HOISTS, HOOKS, JACKS, AND SLINGS

B30 STANDARD INTRODUCTION (05)

SECTION I: SCOPE

The ASME B30 Standard contains provisions that apply to the construction, installation, operation, inspection, testing, maintenance, and use of cranes and other lifting and material-handling related equipment. For the convenience of the reader, the Standard has been divided into separate volumes. Each volume has been written under the direction of the ASME B30 Standards Committee and has successfully completed a consensus approval process under the general auspices of the American National Standards Institute (ANSI).

As of the date of issuance of this Volume, the B30 Standard comprises the following volumes:

B30.1 Jacks
B30.2 Overhead and Gantry Cranes (Top Running Bridge, Single or Multiple Girder, Top Running Trolley Hoist)
B30.3 Construction Tower Cranes
B30.4 Portal, Tower, and Pedestal Cranes
B30.5 Mobile and Locomotive Cranes
B30.6 Derricks
B30.7 Base Mounted Drum Hoists
B30.8 Floating Cranes and Floating Derricks
B30.9 Slings
B30.10 Hooks
B30.11 Monorails and Underhung Cranes
B30.12 Handling Loads Suspended From Rotorcraft
B30.13 Storage/Retrieval (S/R) Machines and Associated Equipment
B30.14 Side Boom Tractors
B30.15 Mobile Hydraulic Cranes
(NOTE: B30.15-1973 has been withdrawn. The revision of B30.15 is included in the latest edition of B30.5).
B30.16 Overhead Hoists (Underhung)
B30.17 Overhead and Gantry Cranes (Top Running Bridge, Single Girder, Underhung Hoist)
B30.18 Stacker Cranes (Top or Under Running Bridge, Multiple Girder With Top or Under Running Trolley Hoist)
B30.19 Cableways
B30.20 Below-the-Hook Lifting Devices
B30.21 Manually Lever Operated Hoists
B30.22 Articulating Boom Cranes
B30.23 Personnel Lifting Systems
B30.24 Container Cranes[1]
B30.25 Scrap and Material Handlers
B30.26 Rigging Hardware
B30.27 Material Placement Systems
B30.28 Balance Lifting Units[1]

SECTION II: SCOPE EXCLUSIONS

The B30 Standard does not apply to track and automotive jacks, railway or automobile wrecking cranes, shipboard cranes, shipboard cargo-handling equipment, well-drilling derricks, skip hoists, mine hoists, truck body hoists, car or barge pullers, conveyors, excavating equipment, or equipment covered under the scope of the following standards: A10, A17, A90, A92, A120, B20, B56, and B77.

SECTION III: PURPOSE

The B30 Standard is intended to

(a) prevent or minimize injury to workers, and otherwise provide for the protection of life, limb, and property by prescribing safety requirements

(b) provide direction to manufacturers, owners, employers, users, and others concerned with or responsible for its application

(c) guide governments and other regulatory bodies in the development, promulgation, and enforcement of appropriate safety directives

SECTION IV: USE BY REGULATORY AGENCIES

This Standard may be adopted in whole or in part for governmental or regulatory use. If adopted for governmental use, the references to other national codes and standards in the specific volumes may be changed to refer to the corresponding regulations of the governmental authorities.

SECTION V: EFFECTIVE DATE

(a) Effective Date. The effective date of this Volume of the B30 Standard shall be one year after its date of

[1] These volumes are currently in development.

Copyright ASME International
Provided by IHS under license with ASME
No reproduction or networking permitted without license from IHS
Not for Resale

issuance. Construction, installation, inspection, testing, maintenance, and operation of equipment manufactured and facilities constructed after the effective date of this Standard shall conform to the mandatory requirements of this Standard.

(b) Existing Installations. Equipment manufactured and facilities constructed prior to the effective date of this Volume of the B30 Standard shall be subject to the inspection, testing, maintenance, and operation requirements of this Standard after the effective date.

It is not the intent of this Volume of the B30 Standard to require retrofitting of existing equipment. However, when an item is being modified, its performance requirements shall be reviewed relative to the requirements within the current volume. The need to meet the current requirements shall be evaluated by a qualified person selected by the owner (user). Recommended changes shall be made by the owner (user) within 1 year.

SECTION VI: REQUIREMENTS AND RECOMMENDATIONS

Requirements of this Standard are characterized by use of the word *shall*. Recommendations of this Standard are characterized by the word *should*.

SECTION VII: USE OF MEASUREMENT UNITS

This Standard contains SI (metric) units as well as U.S. Customary units. The values stated in customary units are to be regarded as the standard. The SI units are a direct (soft) conversion from the customary units.

SECTION VIII: REQUESTS FOR REVISION

The B30 Standards Committee will consider requests for revision of any of the volumes within the B30 Standard. Such requests should be directed to:

Secretary of the B30 Committee, ASME, Three Park Avenue, New York, NY 10016-5990

The requests should be in the following format:

Volume: Cite the designation and title of the volume.

Edition: Cite the applicable edition of the volume.

Subject: Cite the applicable paragraph number(s) and the relevant heading(s).

Request: Indicate the suggested revision.

Rationale: State the rationale for the suggested revision.

Upon receipt by the Secretary, the request will be forwarded to the relevant B30 Subcommittee for consideration and action. Correspondence will be provided to the requester defining the actions undertaken by the B30 Standards Committee.

SECTION IX: REQUESTS FOR INTERPRETATION

The B30 Standards Committee will render an interpretation of the provisions of the B30 Standard. Such requests should be directed to:

Secretary of the B30 Committee, ASME, Three Park Avenue, New York, NY 10016-5990

The requests should be in the following format:

Volume: Cite the designation and title of the volume.

Edition: Cite the applicable edition of the volume.

Subject: Cite the applicable paragraph number(s) and the relevant heading(s).

Question: Phrase the question as a request for an interpretation of a specific provision suitable for general understanding and use, not as a request for approval of a proprietary design or situation. Plans or drawings that explain the question may be submitted to clarify the question. However, they should not contain any proprietary names or information.

Upon receipt by the Secretary, the request will be forwarded to the relevant B30 Subcommittee for a draft response, which will then be subject to approval by the B30 Standards Committee prior to its formal issuance.

Interpretations to the B30 Standard will be published in the subsequent edition of the respective volume and will be available online at http://cstools.asme.org.

SECTION X: ADDITIONAL GUIDANCE

The equipment covered by the B30 Standard is subject to hazards that cannot be abated by mechanical means, but only by the exercise of intelligence, care, and common sense. It is therefore essential to have personnel involved in the use and operation of equipment who are competent, careful, physically and mentally qualified, and trained in the proper operation of the equipment and the handling of loads. Serious hazards include, but are not limited to, improper or inadequate maintenance, overloading, dropping or slipping of the load, obstructing the free passage of the load, and using equipment for a purpose for which it was not intended or designed.

The B30 Standards Committee fully realizes the importance of proper design factors, minimum or maximum dimensions, and other limiting criteria of wire rope or chain and their fastenings, sheaves, sprockets, drums, and similar equipment covered by the standard, all of which are closely connected with safety. Sizes, strengths, and similar criteria are dependent on many different factors, often varying with the installation and uses. These factors depend on the condition of the equipment or material; on the loads; on the acceleration

Copyright ASME International
Provided by IHS under license with ASME
No reproduction or networking permitted without license from IHS
Not for Resale

or speed of the ropes, chains, sheaves, sprockets, or drums; on the type of attachments; on the number, size, and arrangement of sheaves or other parts; on environmental conditions causing corrosion or wear; and on many variables that must be considered in each individual case. The requirements and recommendations provided in the volumes must be interpreted accordingly, and judgment used in determining their application.

Copyright ASME International
Provided by IHS under license with ASME
No reproduction or networking permitted without license from IHS
Not for Resale

ASME B30.23-2005
SUMMARY OF CHANGES

Following approval by the ASME B30 Committee and ASME, and after public review, ASME B30.23-2005 was approved by the American National Standards Institute on December 13, 2005.

ASME B30.23-2005 includes the following changes identified by a margin note, **(05)**.

Page	*Location*	*Change*
vii–ix	B30 Standard Introduction	Revised in its entirety
1, 2	Section 23-0.1	Revised
	Section 23-0.2	Revised
	Section 23-0.3	(1) *ground crew* added (2) *qualified person* revised (3) *shackle, safety type* deleted
3	23-1.1.1(a)(1)(b)	Revised
4	23-1.1.1(b)(7)	First paragraph revised
	23-1.1.1(b)(10)(d)	Revised
	23-1.1.1(b)(10)(i)	Revised
5	23-1.1.2(b)	Revised
	23-1.2.2(a)	Revised
6	23-2.1.2	Revised
	23-2.2.1(a)(2)	Revised
7	23-2.2.1(c)	Revised
	23-2.2.2(a)	Revised
9	23-3.1.3(a)	Revised
10	23-3.2.1(j)(7)	Added
11	23-3.2.2(a)(18)	Revised
	23-3.2.2(a)(25)	Added
12	23-3.2.5(a)	Revised
	23-3.2.5(h)	Added

SPECIAL NOTE:

The interpretations to ASME B30.23 are included in this edition as a separate section for the user's convenience.

Copyright ASME International
Provided by IHS under license with ASME
No reproduction or networking permitted without license from IHS
Not for Resale

PERSONNEL LIFTING SYSTEMS

Chapter 23-0
Scope, Definitions, and References

(05) SECTION 23-0.1: SCOPE OF B30.23

Within the general scope defined in Section I, ASME B30.23 may apply to hoisting and accessory equipment covered within certain volumes of the ASME B30 Standard, which is used to lift, lower, hold, or transport personnel in a platform, by wire rope or chain, from hoist equipment, or by a platform that is mounted on a boom of the hoist equipment. The lifting of personnel is not allowed using some ASME B30 Standard equipment. The ASME B30 volume addressing the hoisting equipment to be used shall be consulted for the applicability of the ASME B30.23 volume.

(05) SECTION 23-0.2: INTENT OF B30.23

This volume establishes the design criteria, equipment characteristics, and operational procedures which are required when material handling equipment, as defined by the ASME B30 Standard, is used to lift personnel. Hoisting equipment as defined by the ASME B30 Standard is intended for material handling. It is not designed, manufactured, or intended to meet the standards for personnel handling equipment, such as ANSI/SIA A92 (Aerial Platforms). The equipment and implementation requirements listed in this volume are not the same as that established for using equipment specifically designed and manufactured for lifting personnel. Hoisting equipment complying with the ASME B30 Standards shall not be used to lift or lower personnel unless it is not possible to accomplish the task by a less hazardous means. The lifting or lowering of personnel using ASME B30-compliant hoisting equipment is prohibited unless all applicable requirements of this volume have been met.

(05) SECTION 23-0.3: DEFINITIONS

anti-two-block device: a device that, when activated, disengages all hoisting equipment functions whose movement can cause two-blocking.

attachment point(s): the place(s) on a boom or a personnel platform that is used to connect either the platform to the boom or to a suspension system.

boom: a hinged structural member of hoisting equipment used for supporting the hoisting tackle and load.

brake: a device used for retarding or stopping motion.

brake, automatic: a device that retards or stops motion, without actuation by the operator, when specific equipment operational parameters are met.

certified welder: a person holding a current certificate, for the type of weld being applied, as proof that qualified test welds have been performed and passed in accordance with the American Welding Society or American Society of Mechanical Engineers criteria.

design factor: the ratio of the ultimate strength of a material to its working (unit) stress, unless defined otherwise in the text of this volume, for specific applications.

designated person: a person who is selected or assigned by the employer or employer's representative as being competent to perform specific duties.

ground crew: those individuals who are involved in the personnel lift, other than the hoisting equipment operator and platform occupants. These individuals include riggers, signal persons, and supervision.

handrail: a member supported on brackets to furnish support to platform occupants during lifting operations.

hoisting equipment: a machine for lifting and lowering a load and moving it horizontally. The machine may be fixed or mobile and be driven manually, by power, or by a combination of both. As used in this volume, the term covers all types of lifting machines addressed by the ASME B30 Standard volumes and used to lift, lower, or transport personnel.

intermediate rail: the middle member of a barrier along the edges of a platform, located approximately one-half the distance between the platform floor and top rail.

latch, hook: a device used to bridge or close the throat opening of a hook for the purpose of preventing attachments from being dislodged.

lifting, personnel: raising, lowering, or transporting personnel using hoisting equipment covered by the ASME B30 Standard.

Copyright ASME International
Provided by IHS under license with ASME
No reproduction or networking permitted without license from IHS
Not for Resale

live boom: a boom whose lowering is controlled by a brake without the aid of other lowering retarding devices (free-fall capable).

live load line: a load line whose lowering is controlled by a brake without the aid of other lowering retarding devices (free-fall capable).

load, rated: capacity or rating established by the manufacturer or a qualified person for a stipulated hoisting equipment configuration.

load, working: the external load applied to the hoisting equipment, including the personnel lifting platform, its contents, and the load-attaching equipment, such as lower load block, shackles, and slings.

load ratings: a set of rated loads for stipulated hoisting equipment configurations and operating conditions.

nondestructive test (NDT): visual inspection coupled with any one of the following techniques: radiographic, magnetic particle, liquid die penetrant, or ultrasonic.

occupant, platform: a person who is within the guardrail barrier while the personnel platform is in a hoisted position.

outriggers: extendable or fixed members attached to the mounting base, which rest on supports at the outer ends, used to support the hoisting equipment.

platform, personnel — boom attached: platform attached to the boom of the hoist equipment.

platform, personnel — suspended: platform attached to hoisting equipment using wire rope, chain, or jointed attachment and that has no installed motion controls for the platform itself.

platform, rating: the maximum capacity of a personnel lifting platform, established by the platform manufacturer, in terms of weight and number of occupants allowable.

power controlled lowering: a system or device in the power train, other than the load hoist brake, that can regulate the lowering rate of speed of the load hoist mechanism.

qualified person: a person who, by possession of a recognized degree in an applicable field or certificate of professional standing or by extensive knowledge, training, and experience, has successfully demonstrated the ability to solve or resolve problems relating to the subject matter and work.

rope: refers to wire rope unless otherwise specified.

runway: an assembly of rails, beams, girders, brackets, concrete, and framework that provides a stable travel surface, within 1% of level, at any position of travel and that is capable of safely supporting the hoisting equipment in the operational configuration and with the operational loads.

shall: this word indicates that the requirement is mandatory and must be followed.

should: this word indicates that the requirement is a recommendation. The advisability of the recommendation depends on the facts in each situation.

stabilizer: an extendable or fixed member attached to the mounting base that, when properly deployed, increases the stability of the hoist equipment. Stabilizers may or may not have the capability of relieving all of the weight from the hoist equipment wheels or tracks.

suspension system: the rope or chain slings and other components, including fastening devices, used to connect the hoisting equipment to the personnel platform.

telescoping boom: a boom in which one or more boom sections are telescoped for additional length.

toe board: a vertical barrier at floor level along the edges of a platform to protect against material from falling over the edge.

top rail: the top member of a barrier along the edges of a platform to protect against persons from falling off the platform.

travel: the function of the hoisting equipment moving under its own power from one location to another.

two-blocking: the condition in which the lower load block or hook assembly comes in contact with the upper load block or boom point sheave assembly.

SECTION 23-0.4: REFERENCES

The following is a list of publications referenced in this volume:

AISC Specification for Structural Joints Using ASTM A 325 or A 490 Bolts

Publisher: American Institute of Steel Construction, Inc., 1 East Wacker Drive, Chicago, IL 60601-2001

ASME B30.9-1990, Slings

ASME Boiler and Pressure Vessel Code, Section VIII, Division 1, Rules for Construction of Pressure Vessels, 1992

Publisher: The American Society of Mechanical Engineers (ASME), Three Park Avenue, New York, NY 10016-5990; Order Department: 22 Law Drive, P.O. Box 2300, Fairfield, NJ 07007-2300

AWS D1.1-1992, Structural Welding Code — Steel (Section 5, Parts C and D)

Publisher: The American Welding Society (AWS), 550 NW Le Jeune Road, Miami, FL 33126

Federal Specification RR-C-271D

Publisher: U.S. Government Printing Office, Washington, D.C. 20402

Copyright ASME International
Provided by IHS under license with ASME
No reproduction or networking permitted without license from IHS
Not for Resale

Chapter 23-1
Construction and Characteristics

SECTION 23-1.1: DESIGN

23-1.1.1 Personnel Lifting Platform

(a) Design Factor

(1) Suspended Platforms

(a) The suspended platform shall have a minimum design factor of five, based on the stated platform rating. Each load-supporting component shall have a minimum design factor of five based on the maximum intended resultant stress in that component.

(05) *(b)* The suspended platform suspension system shall have a minimum design factor based on the maximum intended resultant stress in the suspension system during use and guided by the following:

(1) one-leg system — design factor of seven

(2) two or more leg system — design factor of five for each leg with only two legs under stress

(2) Boom Attached Platforms

(a) The load-supporting structural components of the platform shall have a minimum design factor of two based on the minimum yield strength of the material.

(b) The load-supporting structural components of the platform that are made of nonductile material, which will not deform plastically before breaking, shall have a minimum design factor of five based on the minimum ultimate strength of the materials used.

(c) The stress used in determining the design factor shall be the maximum stresses developed within the component, based on the platform rating and operated in accordance with the manufacturer's instructions. This stress shall include the effects of stress concentration and dynamic loading as shown in the following formula:

$$\text{DESIGN FACTOR} = \frac{\sigma}{(\sigma_1 + \sigma_2)\, f_1\, f_2}$$

where

f_1 = stress concentration factor
f_2 = dynamic loading factor
σ = yield strength for materials described in (a) above or ultimate strength for materials described in (b) above
σ_1 = stress due to the weight of the platform
σ_2 = stress due to the maximum platform rating

The values of f_1 and f_2 may be determined by experimental stress analysis on a prototype unit. The values of f_1 and f_2 shall not be less than 1.10 and 1.25, respectively. The value of f_2 shall be verified as adequate by the manufacturer of the hoisting equipment on which the platform is intended to be used.

(b) Features. Platforms and suspension systems shall be designed to minimize hazards to the occupants. The following items shall be the minimum design requirements for a platform:

(1) A minimum platform rating of 300 lb (136 kg).

(2) Guardrail protection consisting of a top rail, intermediate rail, toe board, and lower barrier. The top rail shall be not less than 39 in. (990 mm) nor more than 45 in. (1140 mm) in height with respect to the platform floor. The toe board shall be around the entire periphery of the platform and a minimum of 3.5 in. (90 mm) in height from the top of the platform floor. The lower barrier shall span the distance between the toe board and intermediate rail and be of solid construction or expanded metal having no opening that would allow a 0.5 in. (13 mm) sphere to pass through. Each top rail, intermediate rail, and lower barrier shall be capable of withstanding a concentrated load of 300 lb (135 kg) applied at any point in an outward or downward direction without reaching the yield point of the material. A solid barrier from the top rail to the floor is permissible, provided the top rail height and barrier structural competence meet the requirements of this paragraph.

(3) Anchorage points within the platform or on the boom tip. These points shall be suitable for attaching personnel fall protection device lanyards and capable of withstanding, without failure, the impact load created by falling loads. The falling loads shall be calculated using 300 lb (135 kg) as a single occupant weight, then multiplied by the number of occupants that are required to attach to the anchorage point when the platform is at maximum occupancy. Impact loads shall be calculated using this load and allowed to freely fall from the top rail of the platform while attached to the point with a lanyard having a length that permits movement within the platform's perimeter but not exceeding 6 ft (1.83 m).

(4) Hand railings within the suspended platform. Hand railings shall be provided around the entire platform with the exception of any access gates or doors. Hand railings shall have a clearance of not less than 1.5 in. (39 mm) between the railing and any other structure.

(5) Flooring with a slip-resistant surface and provisions to facilitate the free drainage of liquids and that

Copyright ASME International
Provided by IHS under license with ASME
No reproduction or networking permitted without license from IHS
Not for Resale

will withstand the forces developed under proof test loadings. Flooring shall have no opening that will allow a sphere of 0.5 in. (13 mm) to pass through.

(6) Means to secure loose items within the platform.

(05) *(7)* An identification plate shall be located on the platform. The location shall protect against damage and allow easy viewing from both the interior (while hoisted) and exterior (while not hoisted) of the platform. As a minimum, the following information shall be displayed:

(a) manufacturer name and address

(b) platform rating in terms of weight and personnel

(c) platform identification number

(d) suspension system description for suspended platforms or the intended hoisting equipment manufacturer identification for boom-attached platforms

(e) weight of the empty platform and its suspension system

(f) date of the platform manufacture

(g) certification of compliance to the design, construction, and testing requirements of this volume

(h) listing of any unique operational environments for which the platform has been designed

(8) Access gates, including sliding or folding types, if installed, shall be equipped with a positive acting device to restrain the gate from accidental opening. Swinging type access gates shall not swing outward while the platform is suspended.

(9) The suspension system shall minimize tipping due to movement of personnel on the platform and should not allow motion of more than ten degrees off the horizontal plane.

(10) For suspended platforms, a suspension system that minimizes the potential for the system's removal and use for other purposes. The suspension system shall be sized by the platform manufacturer, and its installed sling angle established, so as not to cause damage to the platform. Suspension systems shall comply with the following:

(a) Rope sling suspension systems with mechanically spliced flemish eyes, if used, shall be designed with thimbles in all eyes. Wire rope clips, wedge sockets, or knots shall not be used.

(b) Rope sling suspension systems with pored socket end connections, if used, shall be designed in accordance with the manufacturer's or qualified person's application instructions.

(c) Chain sling suspension systems, if used, shall be designed using a minimum of grade 80 chain.

(05) *(d)* All sling suspension systems shall utilize a master link for attachment to the hoisting equipment hook or bolt type shackle with cotter pin.

(e) Synthetic webbing or natural or synthetic fiber rope slings shall not be used for suspension systems.

(f) Suspension system legs shall be sized based on the requirements of para. 23-1.1.1(a)(1)(b).

(g) Suspension systems should be designed to divide the load evenly among the suspension legs.

(h) Rope sling and chain sling suspension systems shall have each leg of the system permanently marked with the rated load of the leg. The master link in the system shall be permanently marked with the suspension system's rated load and identification as a personnel lifting platform suspension component.

(i) Shackles, if used in the suspension system, shall be of a bolt type with cotter pin. (05)

(11) Overhead protection, when provided for a platform, shall allow for a clear view of the hoist equipment components directly overhead, from any position in the platform. Any openings designed in the overhead protection shall not allow a sphere of greater than 0.5 in. (13 mm) to pass through.

(12) Include appropriate accessories to facilitate the use of the platform in the special environments specified by the manufacturer.

(13) Welds used in the construction of the platform shall be in accordance with American Welding Society or ASME guidelines.

(14) Bolted connections of load sustaining members or components of the platform shall be in accordance with the AISC Specification for Structural Joints Using ASTM A 325 or A 490 Bolts.

(15) The incorporation of a weatherproof compartment suitable for storage of the Operator Manual and assorted other documents, or a weatherproof placard displaying the Operator Manual, and readable from the platform, when motion controls that are operational from the platform are installed.

(16) Motion controls, if installed on the platform, shall

(a) be clearly identified as to their function

(b) be protected from inadvertent actuation

(c) be inside the platform and readily accessible to the operator

(d) when possible be oriented and move in the approximate direction of the function that they control

(e) return to their neutral position and stop all motion when released

(17) Boom motion controls, if provided, shall additionally

(a) include a control that must be continuously activated for controls to be operational

(b) include an Emergency Stop Control that does not require continuous actuation for a stop condition

(c) have motion controls, accessible at ground level, that can override platform controls

23-1.1.2 Hoisting Equipment

(a) Only the hoisting equipment manufacturer may approve the design, and installation procedures, for platform mounting attachment points on lattice type boom

--`,,```,,,,````-`-`,,`,,`,`,,`---

Copyright ASME International
Provided by IHS under license with ASME
No reproduction or networking permitted without license from IHS Not for Resale

equipment and lattice type boom extensions. The design, and installation procedures, for platform mounting attachment points on other type hoisting equipment shall be approved by the hoisting equipment manufacturer or a qualified person. All approvals shall be in writing.

(05) *(b)* Platform-mounting attachments on the hoisting equipment and on the platform should allow the platform floor to remain within 10 deg of the horizontal plane, regardless of boom angle.

(c) Platform mounting attachments on the hoisting equipment shall be designed to protect against disengagement during lifting operation.

SECTION 23-1.2: CONSTRUCTION

23-1.2.1 Personnel Lifting Platform

(a) Standards. Platforms shall be constructed using designs meeting the requirements of Section 23-1.1.

(b) Quality Assurance

(1) Edges exposed to contact by platform occupants or platform handlers shall be smoothed to protect against injury.

(2) Welding of the platform shall be in accordance with American Welding Society or ASME procedures and performed by a certified welder.

(3) Quality verification testing shall, as a minimum, consist of the requirements outlined in para. 23-2.2.1(a).

(c) Certifications and Manuals

(1) The manufacturer shall certify that the platform manufactured, and the suspension system incorporated, meet the design, construction, and testing requirements set forth in this volume. This certification shall be indicated on the plate attached to the platform.

(2) The manufacturer shall provide written certification of the platform rating to the purchaser upon request.

(3) The manufacturer of a platform, which has platform motion controls in the platform, shall

(a) provide an Operator Manual with the platform

(b) provide a weatherproof compartment, in the platform, that is capable of storing the Operator Manual or have the Operator Manual displayed on a weatherproof placard, readable from the platform

23-1.2.2 Hoisting Equipment

Hoisting equipment used to lift personnel platforms shall have been constructed in accordance with the applicable ASME B30 volume. All hoisting equipment shall be verified as having the following features prior to being used for personnel lifting:

(a) Hoist equipment features and/or controls that permit live boom or live load line operation shall be made inoperable so that neither a live boom nor a live load line operation can take place during personnel lifting. (05)

(b) Rope or chain hoisting systems, which are used for personnel lifting, shall have an anti-two-block device installed.

(c) Hoisting equipment with a variable angle boom shall have a boom angle indicator readily visible to the operator.

(d) Hoisting equipment with telescoping booms shall have a boom length indicator, readable from the operator's station, unless the load rating is independent of the boom length.

(e) Hooks used for attachment of a personnel lifting platform shall be of a type that can be positively locked closed and will prevent the platform lifting bridle from being dislodged.

(f) Hoisting equipment shall have automatic brakes such that when the equipment operating controls are released, the motions are brought to rest.

(g) A holding device, such as a load hold check valve, shall be provided in hydraulic or pneumatic systems to prevent uncontrolled movement of the hoisting equipment in the event of a system failure (e.g., supply hose).

(h) A means to prevent the retraction of any hydraulically or pneumatically activated outriggers or stabilizers in the event a hydraulic or pneumatic line fails, when such devices are a component of the hoisting equipment.

(i) Pendant supported, jib type, boom extensions without positive stops shall not be used to lift personnel.

Copyright ASME International
Provided by IHS under license with ASME
No reproduction or networking permitted without license from IHS
Not for Resale

Chapter 23-2
Inspection, Testing, and Maintenance

SECTION 23-2.1: INSPECTION

All equipment used in the lifting of personnel shall be inspected, tested, and maintained to protect against failure during lifting operations.

23-2.1.1 Personnel Lifting Platform

(a) General. The platform manufacturer shall furnish complete inspection criteria for platform users. The criteria shall address all inspection frequency classifications listed in this volume and shall cover

(1) the platform

(2) rigging components

(3) fasteners

(4) all safety features and attachments

(b) Frequency

(1) Initial Inspection. Prior to initial use and at each new job site, all platforms shall be inspected by a qualified person to verify compliance with the provisions of this volume.

(2) Regular Inspection

(a) Frequent. The platform, suspension system, attachment points, and any platform motion controls shall be inspected at least once each day, before use, by a designated person. The inspection is to identify conditions that have been specifically indicated by the platform manufacturer, or a qualified person, as potentially creating a hazardous operating condition. The inspection shall address at least those items listed in Appendix III. Any conditions found that constitute a hazard shall be corrected prior to lifting personnel.

(b) Periodic. At least once every 12 months, or as required by the platform manufacturer, a periodic inspection of the platform shall be performed by a qualified person in accordance with the instructions provided by the manufacturer. Platforms which have been out of service for 12 or more consecutive months shall receive a periodic inspection prior to use.

(c) Records

(1) For frequent inspections, dated records for the hoisting equipment and personnel platform shall be made and kept by the platform user for the duration of the personnel lift operation.

(2) For periodic inspections, dated records for the platform shall be made by the platform owner. The last periodic inspection shall be kept with the platform and available for review.

23-2.1.2 Hoisting Equipment (05)

Hoisting equipment shall be inspected in accordance with the defined "Inspection Classification" requirements of the applicable ASME B30 volume.

SECTION 23-2.2: TESTING

23-2.2.1 Personnel Lifting Platform

(a) Platform Manufacturer Tests

(1) Personnel platforms shall be tested by the manufacturer to the extent necessary to verify compliance with the requirements of this volume, including items such as the following:

(a) load suspension mechanisms or attachment components

(b) occupant safety features

(c) platform rating

Where the complete production platform is not supplied by one manufacturer, such tests shall be conducted at final assembly by the platform assembler or a qualified person.

(2) Rope sling, chain sling, or other leg suspension systems shall be tested, prior to installation, by applying a test load to each individual leg equal to twice the rated load of the leg. If a master link is used in the suspension system, it shall be tested to at least twice the sum of the weight of the platform and the platform rating. All tested components shall be visually inspected after testing. Any component showing damage shall be replaced and the test procedure repeated. (05)

(3) The suspension system attaching points on suspended platforms shall be subjected to nondestructive testing by the platform manufacturer.

(b) Proof Testing

(1) At each new job site, prior to hoisting people in the personnel platform, the platform and rigging shall be proof tested to 125% of the platform's rating. With the proof test load evenly distributed in the platform, the platform shall be hoisted and held in a suspended position for not less than 5 min. After the proof testing, the platform shall be inspected by a qualified person. Any damage revealed by the inspection shall be corrected and another proof test conducted.

(2) When feasible, the hoisting equipment to be used for lifting personnel should be the equipment used to perform the proof tests at the job site as defined in para. 23-2.2.1(b).

Copyright ASME International
Provided by IHS under license with ASME
No reproduction or networking permitted without license from IHS
Not for Resale

(3) After any structural repair or modification, a platform shall be proof tested to 150% of the platform's rating. Boom attached platforms shall use the test procedure described in para. 23-2.2.1(b)(1). Suspended platforms shall be tested by raising the loaded platform to a height, then lowering it at a speed of not less than 100 ft/min (30.5 m/min). Once a lowering speed of 100 ft/min (30.5 m/min) or more is reached, the platform descent shall be halted by applying the hoisting equipment brakes and then the platform allowed to hang for a period of not less than 5 min. After this test and hanging period, the platform shall be inspected by a qualified person. Any damage revealed by the inspection shall be corrected and another proof test conducted.

(05) *(c) Records.* The record of the most recent proof testing shall be maintained at the job site.

23-2.2.2 Hoisting Equipment

(05) *(a)* Hoisting equipment shall be tested in accordance with the defined "Operational Tests" and "Load Test" requirements of the applicable ASME B30 volume.

(b) The hoisting equipment used for lifting personnel shall be tested during the trial lift, as defined in paras. 23-3.2.2(a)(9) and (a)(10).

SECTION 23-2.3 MAINTENANCE

Maintenance instructions in this volume are intended as the minimum guidance for general applications. The personnel platform and hoisting equipment manufacturer's information shall be consulted for specific or more stringent maintenance instructions.

23-2.3.1 Personnel Lifting Platform

(a) Preventative Maintenance

(1) A preventative maintenance program based on the platform manufacturer's recommendations should be established.

(2) Replacement parts used shall be equal to or exceed the original equipment specifications.

(b) Adjustments and Repairs

(1) Any hazardous condition disclosed by any inspection shall be corrected before use of the platform is resumed. Adjustments and repairs shall be accomplished by designated personnel.

(2) Adjustments shall provide for correct functioning of components.

(3) Replacement parts used or repairs made shall be equal to or exceed the original equipment specification.

(4) All welding repairs shall be done by a certified welder.

(5) Any adjustment or repair to the platform suspension system shall be done by a qualified person.

(6) Rope slings or chain slings showing indications described in ASME B30.9 shall be taken out of service.

(c) Modifications. Only modifications approved in writing by the manufacturer or a qualified person shall be accomplished.

(d) Records. The platform owner shall maintain records on any repairs to, or replacements of, the structural components of the platform.

23-2.3.2 Hoisting Equipment

Hoisting equipment shall be maintained in accordance with the requirements of the applicable ASME B30 volume and be capable of operating in accordance with the manufacturer's manuals.

Copyright ASME International
Provided by IHS under license with ASME
No reproduction or networking permitted without license from IHS
Not for Resale

Chapter 23-3
Operation

SECTION 23-3.1: PERSONNEL

23-3.1.1 Management

(a) Management shall require that the provisions of this volume are understood and applied at the operational levels and that the appropriate portions of this volume are included in the pre-lift briefing information.

(b) Management shall designate qualified individuals at each job site to perform the duties of the "Personnel Lift Authorizer" As a minimum, these individuals shall be responsible for

(1) verifying the need for a personnel lift

(2) verifying the equipment to be used for the personnel lift meets the requirements of Chapter 23-1

(3) authorizing the personnel lift operation

(4) requiring the personnel lift be accomplished in accordance with the provisions of this volume

(c) Job site management shall require that the provisions of this volume are implemented during personnel lifting operations.

(d) Job site management shall designate a "Personnel Lift Supervisor" for each personnel lift operation. As a minimum, the individual shall be responsible for

(1) holding the pre-lift meeting

(2) verifying all required inspections have been accomplished

(3) verifying qualified persons are assigned to perform the functions of the operator, signalpersons, and ground crew

(4) supervising the personnel lift operation

(5) accomplishing other tasks that may be needed to enhance the safety of the personnel lift

(e) Job site management shall require that all personnel associated with the lift receive the briefings and safety indoctrinations specified in this volume.

(f) Job site management shall not allow or require any operator to lift personnel under the following circumstances:

(1) The operator does not feel physically or mentally fit to perform the operation.

(2) The operator has been working for more than 10 hr prior to the start of the lift, or the lift will not be completed before the operator has been working for 12 hr.

(3) The operator did not have at least 8 hr off, immediately prior to the work shift containing the personnel lift operation.

(g) Job site management shall designate the appropriate number of signalpersons, ground crew, and platform occupants to perform the personnel lift safely. In suspended and boom-attached platforms without boom motion controls, one occupant shall be designated as the platform signalperson. This person shall be responsible for communicating with the operator and/or other designated signalpersons.

(h) Job site management shall require that the hoisting equipment used to lift personnel shall be in compliance with the requirements prescribed in this volume and the applicable hoisting equipment ASME B30 volume.

23-3.1.2 Hoisting Equipment Operator

(a) Qualifications

(1) The operator shall be qualified to operate the specific type of hoisting equipment used in the personnel lift.

(2) The operator shall comply with any applicable management-developed qualification criteria. As a minimum, the operator qualification requirements shall include but not be limited to

(a) successfully meeting the physical qualification criteria as established in the applicable hoisting equipment ASME B30 volume. Additionally, the operator shall have been tested for substance abuse. Testing shall be in accordance with applicable government regulations and the policies of the employer.

(b) successfully meeting the training and qualification criteria established in the applicable hoisting equipment ASME B30 volume.

(b) Responsibilities. The operator shall be responsible for complying with the requirements of this volume with regard to

(1) hoisting equipment capability

(2) rated load constraints

(3) operational limitations

(4) confirming that all hoisting equipment inspections have been completed and are satisfactory, prior to starting the lift

(5) operating the hoisting equipment in compliance with the procedures specified in this volume

(6) those operations under the operator's direct control

(c) Conduct

(1) When physically or mentally unfit, the operator shall not engage in a personnel lift. The operator has

Copyright ASME International
Provided by IHS under license with ASME
No reproduction or networking permitted without license from IHS
Not for Resale

the right to refuse any personnel lift under the following circumstances:

(a) The operator does not feel physically or mentally fit to perform the operation.

(b) The operator has been working for more than 10 hr prior to the start of the lift, or the lift will not be completed before the operator has been working for 12 hr.

(c) The operator did not have at least 8 hr off immediately prior to the work shift containing the personnel lift operation.

(2) While actually engaged in operating the hoisting equipment, the operator shall not engage in any practice that will divert his attention.

(3) The operator shall only respond to signals from the Personnel Lift Supervisor or a designated signalperson. The operator shall obey a stop signal at any time, no matter who gives it.

(4) Whenever the operator has any doubt as to the safety of the lift, the operator shall consult with the Personnel Lift Supervisor before commencing or continuing the lift.

(5) The hoisting equipment operator shall

(a) when involved with a suspended platform, boom-mounted platform without controls, or a boom-mounted platform with controls but without a means of lowering, retracting, and rotating in the event the primary power source becomes inoperative, remain at the hoisting equipment controls whenever personnel are in the platform

(b) when involved with a boom-mounted platform with boom motion controls and a means of lowering, retracting, and rotating in the event the primary power source becomes inoperative, be free not to remain at the hoisting equipment controls

23-3.1.3 Ground Crew

(05) *(a) Qualifications.* Individuals assigned as ground crew shall be physically and mentally capable of performing the inspections and operations associated with the lift. They shall be trained in the specific requirements of their tasks associated with the lift.

(b) Responsibilities. The ground crew shall be responsible for

(1) visually inspecting the personnel lifting platform, and its associated rigging, for hazardous conditions, prior to and during any operation

(2) assisting in the entrance and exit of personnel lift occupants at ground level

(3) verifying the personnel platform is securely attached to the hoisting equipment

(4) verifying the load line is not directly attached to, or wrapped around, the personnel platform

(5) verifying boom-attached personnel platforms are only attached using the pins and fittings specified by the hoist equipment manufacturer or a qualified person

(6) keeping people from passing under the raised personnel platform

(7) not using a suspension system for lifting personnel that has been used for lifting loads other than the personnel platform

(8) maintaining continuous and positive communication between the personnel platform occupants and the operator, if signalpersons are part of the ground crew

(c) Conduct. The ground crew shall not engage in any practice or have any other duties which will reduce the safety of the personnel lift operation.

23-3.1.4 Personnel Platform Occupants

(a) Qualifications

(1) Occupants shall have been instructed in the recognized hazards of personnel platform lifts, such as

(a) impacting structures outside the platform

(b) unexpected platform motion

(c) any special hazards associated with the lift

(2) Occupants shall have been instructed in the personnel lifting procedures and safety precautions.

(3) Occupants shall have attended a pre-lift briefing as required by this volume.

(4) Occupants of a platform with controls shall be qualified to operate the controls.

(b) Responsibilities. The platform occupants shall be responsible for

(1) maintaining a stable and even loading on the platform.

(2) keeping all parts of their body inside the platform during raising, lowering, and positioning, except when performing duties as a designated signalperson.

(3) not interfering with the platform operator or the designated signalperson in the platform except to give an emergency stop signal.

(4) keeping their personnel fall protection device lanyard fastened to the provided anchorage points at all times, while occupying the platform, unless special circumstance work requirements dictate otherwise.

(5) being familiar with the hand signals posted in the platform. All occupants shall know the emergency stop signal.

(c) Conduct. Occupants shall conduct themselves in a manner to help maintain the platform stability and the safety of the personnel lift operation.

SECTION 23-3.2: PRACTICES

23-3.2.1 Management

Job site management shall have a Personnel Lifting Management and Approval Program that requires the criteria of this volume to be met, prior to lifting personnel. The program shall, as a minimum, require

(a) the Personnel Lift Supervisor to prepare a personnel lift plan containing at least the information shown

Copyright ASME International
Provided by IHS under license with ASME
No reproduction or networking permitted without license from IHS Not for Resale

in Appendix II. This plan shall be presented to the Personnel Lift Authorizer for review/approval. The plan shall be retained as part of the job site records.

(b) the Personnel Lift Authorizer to verify that there are no less hazardous alternatives to performing the work or providing access to the area. The personnel lift shall not be authorized when less hazardous means are feasible.

(c) the Personnel Lift Authorizer to verify that conditions provide clear visibility. When conditions such as darkness, fog, or snow prevent clear visibility, the Personnel Lift Authorizer shall not authorize personnel lifting.

(d) the Personnel Lift Authorizer to only authorize personnel lifting over, under, or in the vicinity of power lines, in accordance with the requirements of Appendix I.

(e) personnel platforms not to be used in winds in excess of 20 mph (32.2 km/hr) at the hoisted platform height, electric storms, snow, ice, sleet, or other adverse weather conditions which could affect the safety of personnel.

(f) the Personnel Lift Supervisor to verify that each of the requirements in this Section have been met.

(g) the Personnel Lift Supervisor to hold a pre-lift briefing attended by the hoisting equipment operator, platform occupants, and ground crew. If individuals are changed during a series of personnel lifts, each new person shall be appropriately briefed by the Personnel Lift Supervisor. Contents of the briefing shall, as a minimum, cover

(1) the operations section of this volume

(2) assignment and responsibilities of each person involved in the lift operation

(3) the procedures to be followed

(4) guidance on general and specific safety precautions

(5) special signals for the operation

(6) unique considerations of the lift

(7) work to be accomplished during lift

(8) if applicable, the responsibilities and assignments contained in Appendix I when lifting personnel near electrical power lines

(h) the Personnel Lift Supervisor to terminate personnel lifting operations if hazardous conditions develop during the lift.

(i) personnel platforms to be only used for personnel, their tools, and sufficient material to do their work. They shall not be used for solely transporting bulk materials.

(j) a qualified person to evaluate the safety concerns of the operational environment and verify the platform and hoisting equipment are suitable for use. Additionally, special work circumstances may require further precautions. Precautions such as, but not limited to, the following shall be taken:

(1) When welding is to be accomplished from the personnel platform, suitable electrode holders shall be provided to protect them from contact with any conducting components of the platform.

(2) Job site management shall instruct operators of hoisting equipment, installed on floating vessels, not to lift personnel when the list or trim of the vessel exceeds 5 deg. If mobile hoisting equipment is placed on floating vessels, operators shall not lift personnel when the list or trim of the vessel exceeds 1 deg.

(3) When personnel lifts are conducted over water, personnel flotation devices shall be provided and required to be worn. Personnel fall protection devices with quick release features shall be provided and required to be worn. The fall protection device shall be appropriately attached while personnel are lifted over land and detached while personnel are lifted over water.

(4) A boat with appropriate rescue personnel shall be available at all times during a personnel lift over water.

(5) Appropriate personnel protective equipment shall be provided and required to be used around toxic, flammable, or hazardous substances or fumes.

(6) Any concentrated loading of the platform shall be reviewed to preclude the overstressing of any component or impairing the platform stability.

(7) Where the rotation of the platform, while hoisted, can create a hazard, appropriate restraining methods shall be provided and required to be used. **(05)**

23-3.2.2 Hoisting Equipment Operator

(a) The hoist equipment and platform manufacturer's information shall be consulted for specific instruction on the equipment operation. The hoisting equipment and platform operation instructions in this volume are intended as minimum criteria for general applications. The operator shall

(1) inspect the hoist equipment setup area before the personnel lift and report his observations to the Personnel Lift Supervisor. The operator shall inspect the area for potential hazards, such as but not limited to

(a) excessive load and/or radius

(b) overhead obstructions and electrical transmission lines

(c) hazardous locations

(d) inadequate surface and support to withstand all forces imposed

(e) wind, weather, and unstable conditions

(f) any potentially hazardous conditions

(2) inspect the hoist equipment immediately prior to starting a personnel lift operation. The criteria for a Frequent Inspection as specified in the appropriate hoisting equipment ASME B30 volume shall be used.

(3) operate hoisting equipment with outriggers with the outriggers or stabilizers extended, blocked, and

--`,,```,,,,````-`-`,,`,,`,`,,`---

Copyright ASME International
Provided by IHS under license with ASME
No reproduction or networking permitted without license from IHS Not for Resale

locked in accordance with the manufacturers' specifications.

(4) verify that the hoisting equipment is set up and maintained within 1% of level during a personnel lift.

(5) for hoisting equipment with a boom-attached platform, verify that the platform is attached as specified by the platform manufacturer and hoisting equipment manufacturer or qualified person.

(6) for hoisting equipment that uses rope to hoist a personnel platform, verify that the equipment has an anti-two-block device or upper travel limit switch, installed and operational.

(7) not allow the total weight of the lifted load, including rigging, platform, personnel, tools, and material, to exceed 50% of the hoisting equipment's rated load, under the planned conditions of operation (except during testing as outlined in Chapter 23-2).

(8) not allow the platform's rating or the hoisting equipment's reduced rated load to be exceeded when loads are transferred to the hoisted platform.

(9) perform a trial lift prior to lifting personnel with the platform on each shift and after any change of setup location, hoist equipment configuration, or operator. These lifts shall be used to ascertain that hoist equipment setup and configuration is correct, load capacities are adequate, and no hazardous interferences exist and to further demonstrate the operator's competence.

(10) verify that during the trial lift, the platform is loaded to at least the weight expected during the actual lift.

(11) position the platform so that it may be tied off to the structure to which the occupants are entering or leaving, if the platform cannot be landed during the entrance or exit of the occupants. If the platform has been tied off, the operator shall not move the platform until it is verified that it is freely suspended.

(12) not knowingly allow the platform load to exceed the platform rating, except during proof testing.

(13) not travel the hoisting equipment with personnel in the personnel platform except when the equipment runs on fixed rails or runways.

(14) perform all movements of the platform in a slow, controlled manner to minimize sudden movements of the platform.

(15) engage the power-controlled lowering mechanism at all times the platform is occupied (no freefall).

(16) not lift or lower an occupied platform at a speed in excess of 100 ft/min (30.5 m/min) (except during testing as outlined in Chapter 23-2).

(17) in the case of suspended or boom-mounted platforms, without controls, remain at the hoisting equipment controls at all times when the platform is occupied.

(05) *(18)* in the case of boom-mounted platforms, with controls and a means of lowering, retracting, and rotating in the event the primary power source becomes inoperative, be free to not remain at the hoisting equipment controls.

(19) set all brakes and locks on the hoisting equipment after positioning of the personnel platform and before personnel perform any work.

(20) move the platform under controlled conditions and under the direction of a designated signalperson.

(21) not move platforms over, under, or in the vicinity of power lines unless the requirements of Appendix I are met.

(22) not lift any other loads, on any other load lines, while conducting a personnel lift. When the hoisting equipment has a boom-attached platform without controls, it shall not be used for other lifting service.

(23) not disable, or allow to be disabled, any hoist equipment safety device during a personnel lift.

(24) not operate a platform with motion controls without the platform operation manual available in the platform.

(25) hoist the platform at a speed suitable for the safety of the operation but in no case in excess of 90 ft/min (30 m/min) or 1.5 ft/sec (0.5 m/sec). (05)

(b) The operator should avoid the simultaneous operation of more than one of the hoisting equipment motion controls, unless such practice increases the safety of the lift operation.

23-3.2.3 Ground Crew

The platform operation instructions in this volume are intended as minimum criteria for general applications. The platform manufacturer's information shall be consulted for specific instruction on the platform's operation. The ground crew shall

(a) inspect the platform prior to each lift to verify all attachments and the platform structure are secure.

(b) observe the weight test and report any deformation or hazardous conditions to the Personnel Lift Supervisor. Items noted during the weight test shall be verified as safe by a qualified person prior to commencing the personnel lift.

(c) inspect and attach the personnel platform in the manner specified by the platform manufacturer.

(d) verify the platform is evenly loaded, material secured, and the total platform weight does not exceed the platform rating or the reduced hoisting equipment lift capacity.

(e) not allow an occupied platform over, under, or in the vicinity of power lines unless the requirements of Appendix I are met.

(f) use tag lines for motion control of suspended platforms, unless their use creates an unsafe condition.

23-3.2.4 Platform Occupants

(a) The platform operation instructions in this volume are intended as minimum criteria for general applications. The platform manufacturer's information shall be

Copyright ASME International
Provided by IHS under license with ASME
No reproduction or networking permitted without license from IHS Not for Resale

consulted for specific instruction on the platform's operation. The platform occupants shall

(1) remain in continuous sight or in communication with the operator and in sight and communication of a signalperson

(2) use personal protective equipment, such as hard hats, safety glasses, hearing protection, and gloves, in conditions where a hazard of injury exists

(3) wear personnel fall protection devices with lanyards attached to a specific anchorage point(s), unless special circumstance work requirements dictate otherwise

(4) be limited in number, and commensurate with the work being performed, platform design, and hoisting equipment limitations

(5) have materials and equipment evenly distributed and secured while the platform is lifted

(6) not stand, sit on, or work from the top rail, intermediate rail, toe board, or use any other device to enhance their vertical height working capability

(7) not pull the platform out of plumb with the hoisting equipment

(8) not enter or exit a suspended platform while it is raised unless the platform has an installed gate and is physically secured to the structure to which the occupants are entering or exiting

(b) The occupants should

(1) have audible and visual alert devices in the platform for use in an emergency (i.e., air horns or strobe lights)

(2) keep all parts of their body inside the platform during raising, lowering, and positioning unless they are performing the duties of a designated signalperson

23-3.2.5 Communications

(a) Hand signals to the operator shall be in accordance with the applicable hoisting equipment ASME B30 volume. **(05)**

(b) Signals shall be discernible or audible to the operator.

(c) Hand signals shall be posted conspicuously at the following locations:

(1) as required by the hoisting equipment ASME B30 volume

(2) inside the personnel platform

(3) at any platform motion control locations

(d) Some operations may require additions to, or modifications of, standard signals.

(1) Any special signals shall be agreed upon and understood by the signalpersons and hoisting equipment operator.

(2) Special signals shall not conflict with the hoisting equipment standard signals.

(e) No response shall be made unless signals are clearly understood.

(f) If communications between operator and platform occupants are disrupted, all operations shall be stopped until communication is reestablished.

(g) If radios or other electronic means of communications are used, they should operate on a secure channel.

(h) Communication systems to be used during the lift shall be verified as functioning and effective prior to commencing the lift. **(05)**

Copyright ASME International
Provided by IHS under license with ASME
No reproduction or networking permitted without license from IHS
Not for Resale

MANDATORY APPENDIX I
LIFTING PERSONNEL NEAR ELECTRICAL POWER LINES

This volume recognizes that lifting personnel where the hoisting equipment or platform can become electrified from electric power lines is an extremely hazardous practice. It is advisable to perform the lift so there is no possibility of the hoisting equipment, load line, or personnel platform becoming a conductive path. Hoisting equipment shall not be used to lift personnel under electric power lines if any combination of boom, personnel platform, load line, and machine component will enter the prohibited zone shown in the appropriate figure. Lifting personnel near electric power lines is not allowed unless there is no less hazardous way to do the job. The four situations to consider, and take steps to establish, when lifting personnel near electric power lines are

Condition	Situation
A	Power lines are de-energized and grounded as shown in Fig. I-1. (This is the safest and preferred condition.)
B	Power lines are energized with the hoisting equipment outside the prohibited zone, but there is a potential for the hoisting equipment or platform being energized as shown in Fig. I-2.
C	Power lines are energized with the hoisting equipment inside the prohibited zone, and there is a possibility that the hoisting equipment or platform can become energized as shown in Fig. I-3. (Lifting personnel in this condition is prohibited.)
D	Hoisting equipment is in transit with the boom lowered and no personnel in the platform as shown in Fig. I-4.

I-1 CONDITION A

This is the preferred condition under which a personnel lift can be performed. The hazard of injury or death due to electrocution has been removed. The following steps shall be taken when lifting personnel in a Condition A situation:

(a) The power company or owner of the power lines shall de-energize the lines.

(b) The power lines shall be visibly grounded to avoid the possibility of electrical feedback.

(c) A qualified representative of the owner of the power lines or a designated representative of the electric utility shall be on the site to verify that steps (a) and (b) of this section have been completed and that the power lines are not energized.

(d) Durable signs shall be installed at the operator's station and on the outside of the crane warning that electrocution or serious bodily injury may occur unless the minimum clearance shown in Table I-1 is maintained between the hoisting equipment and platform and power lines. These signs shall be posted at the hoist equipment operating station, on the outside of the hoist equipment, and inside the personnel platform.

(e) If proximity warning devices, insulated links, or boom cages are used, by choice or legal mandate, they shall not be a substitute for any of the requirements of this section. If these devices are used, the hoist equipment operator, ground crew, and platform occupants shall be instructed by management on the limitations of the devices, operating condition requirements of the devices, and the devices' testing requirements prescribed by the device manufacturer.

I-2 CONDITION B

The following steps shall be taken when lifting personnel in a Condition B situation:

(a) A meeting, on the job site, between the job site management and either a qualified representative of the owner of the power lines or the electric utility shall take place. Procedures to safely complete the lift shall be established.

(b) The clearance specified in Table I-1 shall be maintained between the hoisting equipment, load line, and personnel platform at all times.

(c) Power line movement, horizontal and vertical, due to wind shall be added to the distances specified in Table I-1. A qualified representative of the power line owner or a designated representative of the electric utility shall be consulted for the movement distances.

(d) The required clearances to the power lines shall be continuously monitored by a dedicated and qualified signalperson in constant communication with the hoist equipment operator.

(e) Personnel platform movement restraint, when required, shall be done through electrically nonconductive tag lines.

(f) No person outside the personnel platform shall be permitted to touch the hoist equipment, load line, or platform unless the signalperson identified in (d) above indicates it is safe.

(g) Operation of the boom or the personnel platform over power lines should be avoided. Poor perception of

Copyright ASME International
Provided by IHS under license with ASME
No reproduction or networking permitted without license from IHS
Not for Resale

distance and multiple contact points, as viewed from the operator's and signalperson's positions, make this a very hazardous situation.

(h) Power line visibility enhancing devices, such as ribbons or balls, should be attached to the power lines to aid in the location of the prohibited zone established in (b) and (c) above.

(i) Durable signs shall be posted warning that electrocution or serious bodily injury may occur unless the minimum clearance shown in Table I-1 is maintained between the hoisting equipment and platform and power lines. These signs shall be posted at the hoist equipment operating station, on the outside of the hoist equipment, and inside the personnel platform.

(j) If proximity warning devices, insulated links, or boom cages are used, by choice or legal mandate, they shall not be a substitute for any of the requirements of this section. If these devices are used, the hoist equipment operator, ground crew, and platform occupants shall be instructed by management on the limitations of the devices, operating condition requirements of the devices, and the devices' testing requirements prescribed by the device manufacturer.

I-3 CONDITION C

Lifting personnel under this condition is prohibited.

I-4 CONDITION D

The following steps shall be taken when transiting to a personnel lifting location in a Condition D situation:

(a) While in transit with no occupants in the platform and the boom lowered, the clearance to the power lines shall be as specified in Table I-1.

(b) When planning the transit of the hoisting equipment, the effect of ground speed and terrain on the hoisting equipment and boom movement shall be considered.

Copyright ASME International
Provided by IHS under license with ASME
No reproduction or networking permitted without license from IHS
Not for Resale

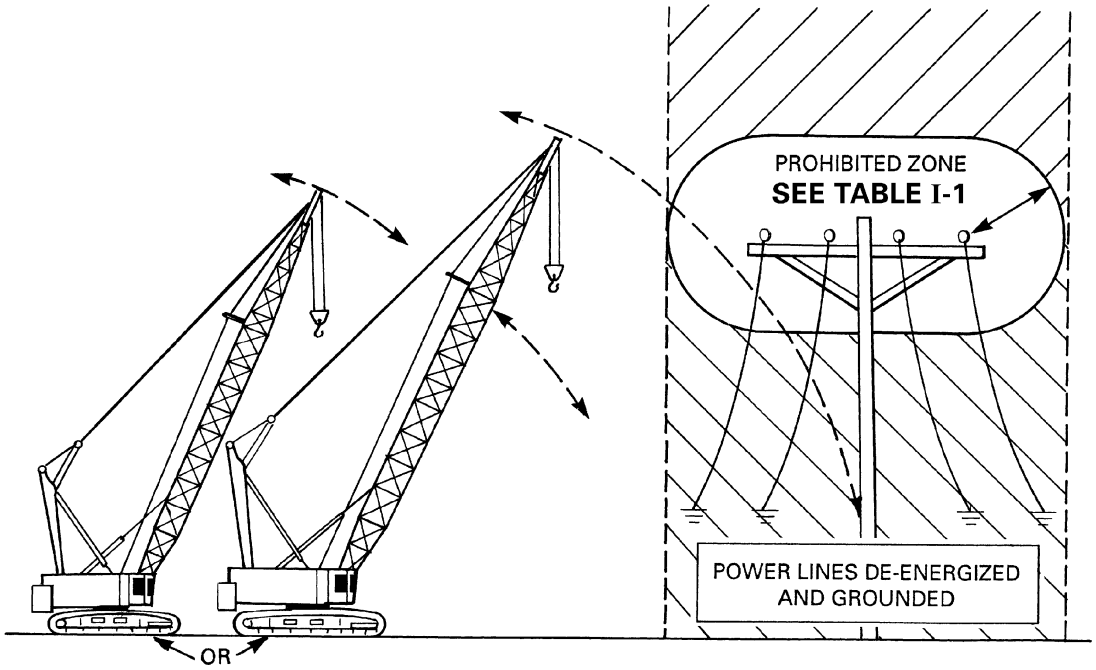

Fig. I-1

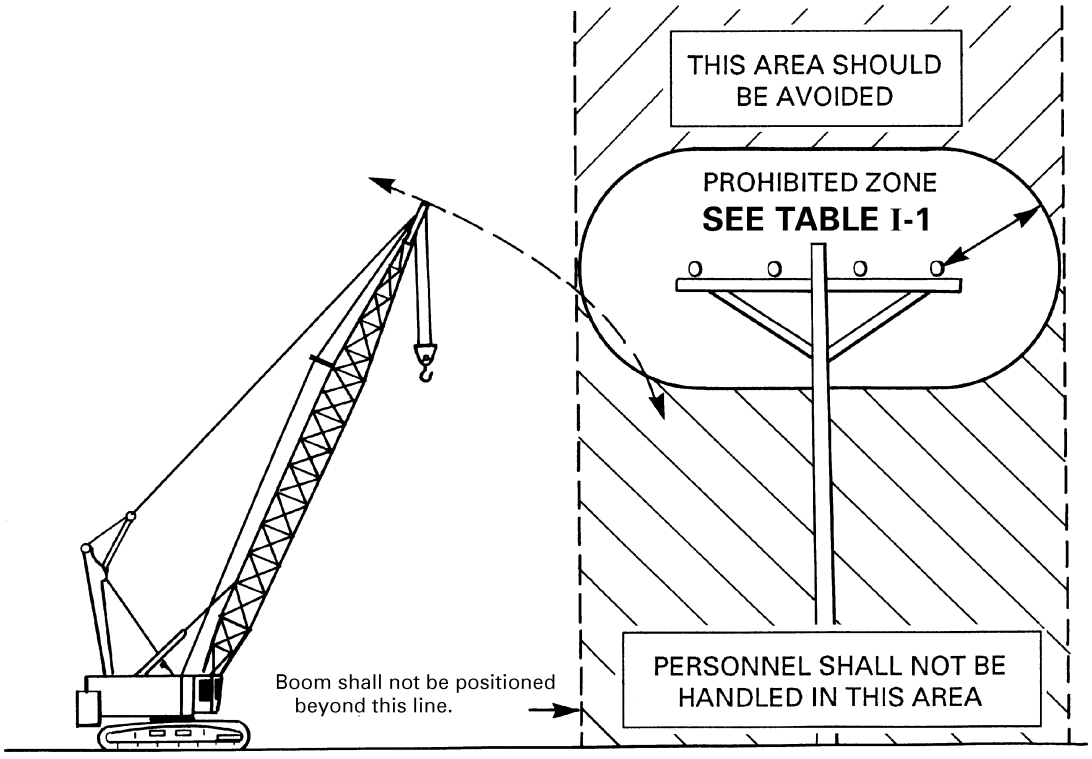

Fig. I-2

Copyright ASME International
Provided by IHS under license with ASME
No reproduction or networking permitted without license from IHS
Not for Resale

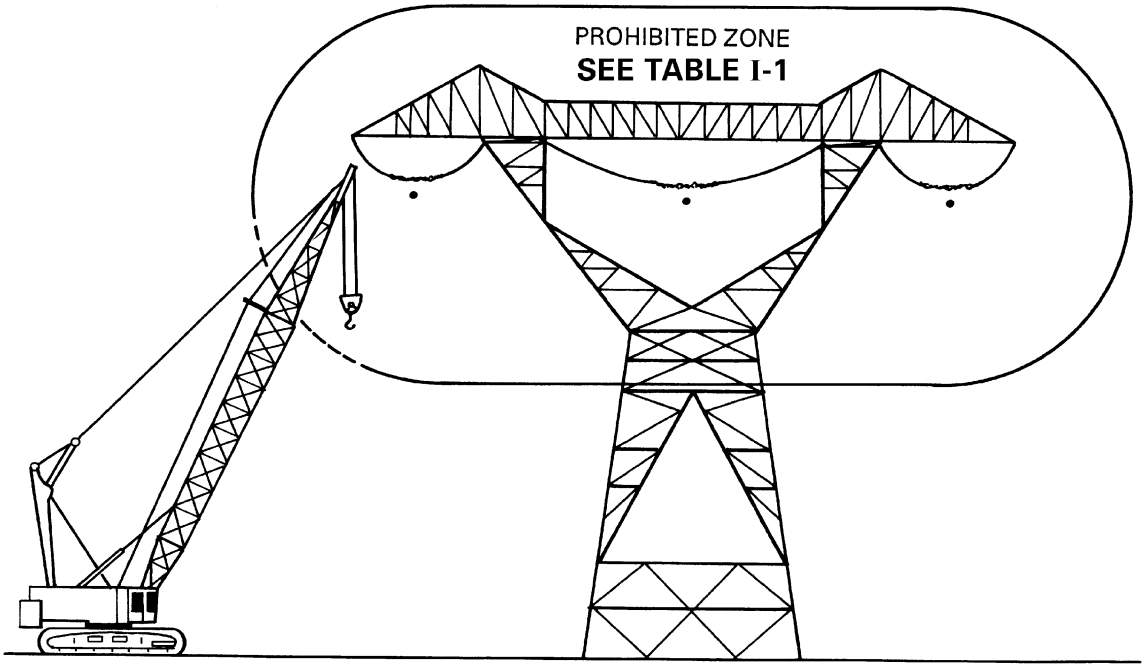

Fig. I-3

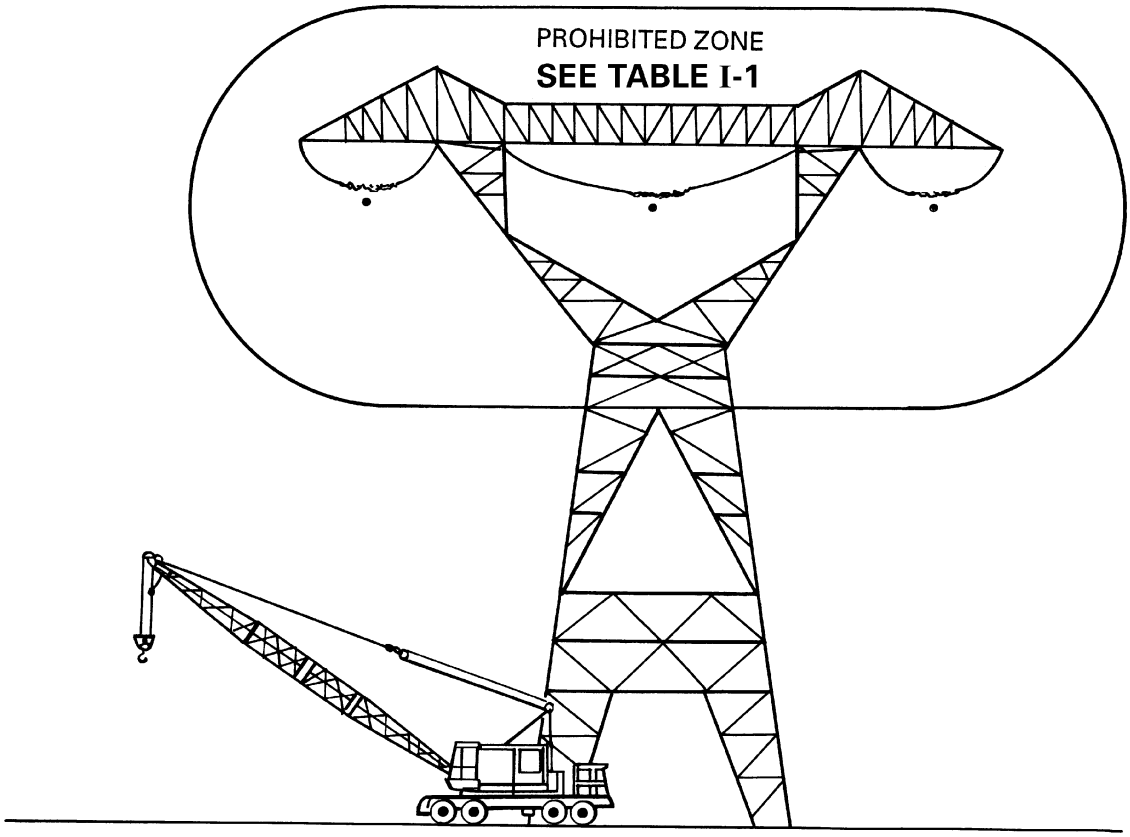

Fig. I-4

Copyright ASME International
Provided by IHS under license with ASME
No reproduction or networking permitted without license from IHS
Not for Resale

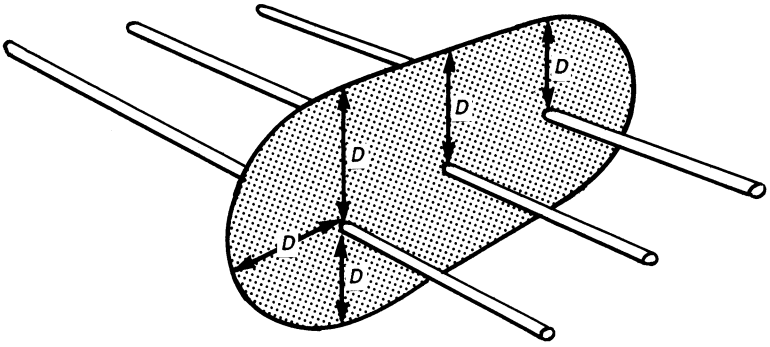

Table I-1 Required Clearance for Normal Voltage in Operation Near High-Voltage Power Lines and Operation in Transit With No Load and Boom or Mast Lowered

Normal Voltage, kV (Phase to Phase)	Minimum Radial Distance, *D*	
	ft	m
When operating near high-voltage power lines		
Up to 50	10	3.05
Over 50 to 200	15	4.6
Over 200 to 350	20	6.1
Over 350 to 500	25	7.62
Over 500 to 750	35	10.67
Over 750 to 1000	45	13.72
While in transit with no load and boom or mast lowered		
Up to 0.75	4	1.22
Over 0.75 to 50	6	1.83
Over 50 to 345	10	3.83
Over 345 to 750	16	4.87
Over 750 to 1000	20	6.10

Copyright ASME International
Provided by IHS under license with ASME
No reproduction or networking permitted without license from IHS
Not for Resale

MANDATORY APPENDIX II
PERSONNEL PLATFORM LIFT PLANNING AND AUTHORIZATION FORM

1. Location: _____ Date: _____
2. Purpose of Lift: _____
   _____
3. Hoisting Eqpt. Mfg: _____ Model #: _____ Serial #: _____
4. Expected Radius: _____ (maximum); _____ (at work location)
5. (A) Rated Load at Radius: _____ (B) Maximum Lift Load: _____ [50% of 5(A)]
6. Platform ID: _____ Platform Rating: _____
7. Platform Weight: _____ Type: (Pin On) _____ (Suspended) _____
8. (A) Number of Platform Occupants: _____ (B) Approx. Wt. (With Equip): _____
9. Total Lift Weight: _____ [7 + 8(B)] [No more than 5(B) above]
10. Personnel Lift Supervisor: _____
11. What Are the Alternatives to This Personnel Lift? _____
    _____
    _____
12. Why Are They Not Being Used? _____
    _____
13. Pre-Lift Briefing Held: ___/__/___ AM/PM
    Attendees: _____
    _____
    _____
14. Anticipated Hazards (wind, weather, visibility, power lines): _____
    _____
15. Lift Accomplished Date: _____ Time: _____
16. Remarks: _____
    _____
    _____

_____
Personnel Lift Authorizer Signature Date

Copyright ASME International
Provided by IHS under license with ASME
No reproduction or networking permitted without license from IHS
Not for Resale

MANDATORY APPENDIX III
PERSONNEL LIFT PLATFORM PRE-LIFT INSPECTION

Inspector: _____ Date: _____

Platform ID: _____

		SAT	UNSAT
1.	Markings		
	Platform (All Information Legible)	_____	_____
	Suspension System	_____	_____
2.	Structure		
	Load Supporting Welds/Bolts	_____	_____
	Load Supporting Members	_____	_____
	Barrier From Toe Board to Intermediate Rail	_____	_____
	Hand Rail	_____	_____
	Fall Protection Device Anchorage Points	_____	_____
	Gate Locking Mechanisms	_____	_____
	Platform Flooring	_____	_____
	Suspension Attachment Points	_____	_____
3.	Attachment Mechanisms		
	Pins/Ears/Bolt-Ups/Eyes (Circle)	_____	_____
	Wire Rope/Chain/Rigid Leg (Circle)	_____	_____
	Master Links	_____	_____
4.	Special Purpose Items		
	(Overhead Protection, Flotation, Platform Controls)		
	List: (1) _____	_____	_____
	(2) _____	_____	_____
	(3) _____	_____	_____

5. General Comments: _____

_____

_____

_____

Personnel Lift Supervisor Signature

Copyright ASME International
Provided by IHS under license with ASME
No reproduction or networking permitted without license from IHS
Not for Resale

--`,,```,,,,````-`-`,,`,,`,`,,`---

Copyright ASME International
Provided by IHS under license with ASME
No reproduction or networking permitted without license from IHS

Not for Resale

ASME B30.23
INTERPRETATIONS

Replies to Technical Inquiries
May 2000 Through October 2000

FOREWORD

This publication includes all of the written replies issued between the indicated dates by the Secretary, speaking for the ASME B30 Committee, Safety Standards for Cableways, Cranes, Derricks, Hoists, Hooks, Jacks, and Slings, to inquiries concerning interpretations of technical aspects of ASME B30.23, Personnel Lifting Systems.

These replies are taken verbatim from the original letters except for a few typographical corrections and some minor editorial corrections made for the purpose of improved clarity. In some instances, a review of the interpretations revealed a need for corrections of a technical nature. In these cases, a corrected interpretation follows immediately after the original reply.

These interpretations were prepared in accordance with the accredited ASME procedures. ASME procedures provide for reconsideration of these interpretations when or if additional information is available that the inquirer believes might affect the interpretation. Further, persons aggrieved by an interpretation may appeal to the cognizant ASME committee or subcommittee. ASME does not "approve," "certify," "rate," or "endorse" any item, construction, proprietary device, or activity.

Copyright ASME International
Provided by IHS under license with ASME
No reproduction or networking permitted without license from IHS
Not for Resale

Interpretation: 23-1

Subject: B30.23-1998, Personnel Lifting Systems, Para. 23-1.1.1(b)(10)(h)

Date Issued: May 23, 2000

Question: When using a four-part bridle with a master link as a suspension system, is it necessary to individually tag each leg as well as the master link?

Reply: Yes.

Interpretation: 23-2

Subject: B30.23-1998, Personnel Lifting Systems, Para. 23-2.2.1(b)(1)

Date Issued: October 5, 2000

Question (1): Does para. 2.2.1(b)(1) require the test load to be placed physically into the platform?

Reply (1): No.

Question (2): If the volume requires the test load to be physically inside the platform, is this the best practice relative to the information provided?

Reply (2): See response to Question (1).

Copyright ASME International
Provided by IHS under license with ASME
No reproduction or networking permitted without license from IHS Not for Resale

ASME B30.23-2005

ISBN 0-7918-2957-X

9 780791 829578

J14205

Copyright ASME International
Provided by IHS under license with ASME
No reproduction or networking permitted without license from IHS

Not for Resale