ASME B30.20-2003
(Revision of ASME B30.20-1999)

BELOW-THE-HOOK LIFTING DEVICES

AN AMERICAN NATIONAL STANDARD



The American Society of Mechanical Engineers

Copyright ASME International
Provided by IHS under license with ASME
No reproduction or networking permitted without license from IHS

Not for Resale

The American Society of Mechanical Engineers

AN AMERICAN NATIONAL STANDARD

BELOW-THE-HOOK LIFTING DEVICES

ASME B30.20-2003

(Revision of ASME B30.20-1999)

SAFETY STANDARD FOR CABLEWAYS, CRANES, DERRICKS, HOISTS, HOOKS, JACKS, AND SLINGS

Copyright ASME International
Provided by IHS under license with ASME
No reproduction or networking permitted without license from IHS

Not for Resale

Date of Issuance: November 19, 2003

The next edition of this Standard is scheduled for publication in 2006. There will be no addenda issued to this edition.

ASME issues written replies to inquiries concerning interpretations of technical aspects of this Standard. Interpretations are published on the ASME Web site under the Committee Pages at http://www.asme.org/codes/ as they are issued, and will also be published within the next edition of the Standard.

ASME is the registered trademark of The American Society of Mechanical Engineers.

This code or standard was developed under procedures accredited as meeting the criteria for American National Standards. The Standards Committee that approved the code or standard was balanced to assure that individuals from competent and concerned interests have had an opportunity to participate. The proposed code or standard was made available for public review and comment that provides an opportunity for additional public input from industry, academia, regulatory agencies, and the public-at-large.

ASME does not "approve," "rate," or "endorse" any item, construction, proprietary device, or activity.

ASME does not take any position with respect to the validity of any patent rights asserted in connection with any items mentioned in this document, and does not undertake to insure anyone utilizing a standard against liability for infringement of any applicable letters patent, nor assume any such liability. Users of a code or standard are expressly advised that determination of the validity of any such patent rights, and the risk of infringement of such rights, is entirely their own responsibility.

Participation by federal agency representative(s) or person(s) affiliated with industry is not to be interpreted as government or industry endorsement of this code or standard.

ASME accepts responsibility for only those interpretations of this document issued in accordance with the established ASME procedures and policies, which precludes the issuance of interpretations by individuals.

No part of this document may be reproduced in any form,
in an electronic retrieval system or otherwise,
without the prior written permission of the publisher.

The American Society of Mechanical Engineers
Three Park Avenue, New York, NY 10016-5990

Copyright © 2003 by
THE AMERICAN SOCIETY OF MECHANICAL ENGINEERS
All rights reserved
Printed in U.S.A.

Copyright ASME International
Provided by IHS under license with ASME
No reproduction or networking permitted without license from IHS

Not for Resale

CONTENTS

Foreword v
Committee Roster vi
Introduction viii
Summary of Changes xi

Chapter 20-0 Scope, Definitions, and References
Section 20-0.1 Scope of ASME B30.20 1
Section 20-0.2 Definitions — General 1
Section 20-0.3 Definitions for Chapter 20-1 1
Section 20-0.4 Definitions for Chapter 20-2 6
Section 20-0.5 Definitions for Chapter 20-3 6
Section 20-0.6 Definitions for Chapter 20-4 8
Section 20-0.7 Definitions for Chapter 20-5 8
Section 20-0.8 References to Other Codes and Standards 8

Chapter 20-1 Structural and Mechanical Lifting Devices
Section 20-1.1 Scope 12
Section 20-1.2 Marking, Construction, and Installation 12
Section 20-1.3 Inspection, Testing, and Maintenance 13
Section 20-1.4 Operation 15
Section 20-1.5 Instruction Manuals 16

Chapter 20-2 Vacuum Lifting Devices
Section 20-2.1 Scope 17
Section 20-2.2 Marking, Construction, and Installation 17
Section 20-2.3 Inspection, Testing, and Maintenance 18
Section 20-2.4 Operation 21
Section 20-2.5 Instruction Manuals 22

Chapter 20-3 Close Proximity Operated Lifting Magnets
Section 20-3.1 Scope 23
Section 20-3.2 Marking, Construction, and Installation 23
Section 20-3.3 Inspection, Testing, and Maintenance 24
Section 20-3.4 Operation 26
Section 20-3.5 Instruction Manuals 28

Chapter 20-4 Remotely Operated Lifting Magnets
Section 20-4.1 Scope 29
Section 20-4.2 Marking, Construction, and Installation 29
Section 20-4.3 Inspection, Testing, and Maintenance 30
Section 20-4.4 Operation 31
Section 20-4.5 Instruction Manuals 32

Chapter 20-5 Scrap and Material Handling Grapples
Section 20-5.1 Scope 33
Section 20-5.2 Marking, Construction, and Installation 33
Section 20-5.3 Inspection, Testing, and Maintenance 33
Section 20-5.4 Operation 35
Section 20-5.5 Instruction Manuals 36

Figures
1 Pressure Gripping Lifters: Friction-Type Lifters 2
2 Grip Ratio 3

Copyright ASME International
Provided by IHS under license with ASME
No reproduction or networking permitted without license from IHS
Not for Resale

3 Pressure Gripping Lifters: Indentation-Type Lifters 3
4 Manipulating Lifters 4
5 Load Supporting Lifters 5
6 Vacuum Lifters 7
7 Magnetic Lifters 9
8 Scrap and Material-Handling Grapples 10

Table
1 Minimum Inspection for Below-the-Hook Lifting Devices 14

Copyright ASME International
Provided by IHS under license with ASME
No reproduction or networking permitted without license from IHS
Not for Resale

FOREWORD (03)

This American National Standard, Safety Standard for Cableways, Cranes, Derricks, Hoists, Hooks, Jacks, and Slings, has been developed under the procedures accredited by the American National Standards Institute (formerly the United States of America Standards Institute). This Standard had its beginning in December 1916, when an eight-page Code of Safety Standards for Cranes, prepared by an ASME Committee on the Protection of Industrial Workers, was presented to the annual meeting of the ASME.

Meetings and discussions regarding safety on cranes, derricks, and hoists were held from 1920 to 1925, involving the ASME Safety Code Correlating Committee, the Association of Iron and Steel Electrical Engineers, the American Museum of Safety, the American Engineering Standards Committee (later changed to American Standards Association and subsequently to the USA Standards Institute), Department of Labor — State of New Jersey, Department of Labor and Industry — State of Pennsylvania, and the Locomotive Crane Manufacturers Association. On June 11, 1925, the American Engineering Standards Committee approved the ASME Safety Code Correlating Committee's recommendation and authorized the project with the U.S. Department of the Navy, Bureau of Yards and Docks, and ASME as sponsors.

In March 1926, invitations were issued to 50 organizations to appoint representatives to a Sectional Committee. The call for organization of this Sectional Committee was sent out October 2, 1926, and the committee organized November 4, 1926, with 57 members representing 29 national organizations. The Safety Code for Cranes, Derricks, and Hoists, ASA B30.2-1943, was created from the eight-page document referred to in the first paragraph. This document was reaffirmed in 1952 and widely accepted as a safety standard.

Due to changes in design, advancement in techniques, and general interest of labor and industry in safety, the Sectional Committee, under the joint sponsorship of ASME and the Naval Facilities Engineering Command, U.S. Department of the Navy, was reorganized as an American National Standards Committee on January 31, 1962, with 39 members representing 27 national organizations.

The format of the previous code was changed so that separate standards (each complete as to construction and installation; inspection, testing, and maintenance; and operation) would cover the different types of equipment included in the scope of B30.

In 1982, the Committee was reorganized as an Accredited Organization Committee, operating under procedures developed by the ASME and accredited by the American National Standards Institute.

This Standard presents a coordinated set of rules that may serve as a guide to government and other regulatory bodies and municipal authorities responsible for the guarding and inspection of the equipment falling within its scope. The suggestions leading to accident prevention are given both as mandatory and advisory provisions; compliance with both types may be required by employers of their employees.

In case of practical difficulties, new developments, or unnecessary hardship, the administrative or regulatory authority may grant variances from the literal requirements or permit the use of other devices or methods, but only when it is clearly evident that an equivalent degree of protection is thereby secured. To secure uniform application and interpretation of this Standard, administrative or regulatory authorities are urged to consult the B30 Committee, in accordance with the format described in Section III, before rendering decisions on disputed points.

This volume of the Standard, which was approved by the B30 Committee and by ASME, was approved by ANSI and designated as an American National Standard on June 5, 2003.

Safety codes and standards are intended to enhance public safety. Revisions result from committee consideration of factors such as technological advances, new data, and changing environmental and industry needs. Revisions do not imply that previous editions were inadequate.

Copyright ASME International
Provided by IHS under license with ASME
No reproduction or networking permitted without license from IHS
Not for Resale

ASME B30 STANDARDS COMMITTEE
Safety Standards for Cableways, Cranes, Derricks, Hoists, Hooks, Jacks, and Slings

(The following is the roster of the Committee at the time of approval of this Standard.)

STANDARDS COMMITTEE OFFICERS

P. S. Zorich, *Chair*
B. D. Closson, *Vice Chair*
J. D. Wendler, *Secretary*

STANDARDS COMMITTEE PERSONNEL

N. E. Andrew, Sverdrup Technology, Inc.
W. T. Hargrove, *Alternate,* Mantech International Corp.
R. E. Bluff, Mingus Constructors, Inc.
R. J. Bolen, E.I. Dupont
A. D. Brown, Kenney Construction Co.
P. L. Rossi, *Alternate,* U.S. Department of Labor, OSHA
S. C. Buck, International Union of Operating Engineers
L. D. Demark, *Alternate,* International Union of Operating Engineers
T. A. Christensen, Alliance of American Insurers/Liberty Mutual Insurance
M. W. Mills, *Alternate,* Liberty Mutual Group
B. D. Closson, NACB Technical Services
T. L. Blanton, *Alternate,* NACB Group, Inc.
J. P. Colletti, John P. Colletti & Associates, Inc.
R. A. Dahlin, Walker Magnetics Group
J. W. Downs, Jr., *Alternate,* Downs Crane and Hoist Co.
D. W. Eckstine, Grove Worldwide
R. H. Fowler, U.S. Department of the Air Force
J. L. Franks, Consultant
R. C. Slater, *Alternate,* McKay International Engineering
J. L. Gordon, FKI Industries, Inc.
R. R. Reisinger, *Alternate,* FKI Industries, Inc.
N. C. Hargreaves, Power Crane & Shovel Association/Terex Corp.
E. D. Fidler, *Alternate,* Terex Corp.
J. J. Headley, Crane Institute of America
R. M. Parnell, *Alternate,* Industrial Training International
C. W. Ireland, Amclyde Engineered Products
A. Egging, *Alternate,* Amclyde Engineered Products
L. S. Johnson, American Equipment Co.
G. L. Owens, *Alternate,* Granite Construction, Inc.
R. M. Kohner, Landmark Engineering Services, Ltd.
H. I. Shapiro, *Alternate,* Specialized Carriers and Rigging Association/Howard I. Shapiro & Associates
H. G. Leidich, Ingersoll-Rand
J. T. Perkins, *Alternate,* Ingersoll-Rand
C. Lucas, The Crosby Group
P. A. Boeckman, *Alternate,* The Crosby Group
L. D. Means, Wire Rope Technical Board/Means Engineering and Consulting
D. M. Sleightholm, *Alternate,* Bridon America Corp.
K. J. Miller, Jacobs Engineering
D. W. Smith, *Alternate,* Chicago Bridge and Iron Co.
J. E. Richardson, U.S. Department of the Navy
J. W. Rowland III, Association of Iron and Steel Engineers/ Bethlehem Steel Corp.
E. E. Rudy, U.S. Department of the Army
J. C. Ryan, BOH Brothers Construction Co.
D. Sayenga, Associated Wire Rope Fabricators
D. J. Bishop, *Alternate,* Bishop Lifting Products, Inc.
G. W. Shields, Caterpillar, Inc.
A. R. Toth, Morris Material Handling
B. E. Weir, Jr., National Erectors Association/Norris Brothers Co., Inc.
S. Conant, *Alternate,* Conant Crane Rental Co.
J. D. Wendler, The American Society of Mechanical Engineers
R. C. Wild, U.S. Army Corps of Engineers
S. G. Testerman, *Alternate,* U.S. Army Corps of Engineers
D. N. Wolff, National Crane Corp.
P. S. Zorich, RZP International Ltd.

HONORARY MEMBERS

J. M. Klibert, Lift-All Co., Inc.
T. S. McKoskey, Consultant
R. W. Parry, Consultant

Copyright ASME International
Provided by IHS under license with ASME
No reproduction or networking permitted without license from IHS
Not for Resale

B30.20 SUBCOMMITTEE PERSONNEL

R. A. Dahlin, *Chair,* Walker Magnetics Group
J. W. Downs, Jr., Downs Crane and Hoist
J. D. Edmundson, Bushman Equipment, Inc.
N. R. Leblanc, Caterpillar, Inc.
C. D. Meads, Bradley Lifting Corp.
H. Bradley, *Alternate,* Bradley Lifting Corp.
G. H. Noetzel, Young Corp.
R. O. Osborn, Jr., BWXT-Y12
B. E. Schaltenbrand, JS Engineering, Inc.
P. D. Sweeney, General Dynamics/Electric Boat

Copyright ASME International
Provided by IHS under license with ASME
No reproduction or networking permitted without license from IHS
Not for Resale

SAFETY STANDARD FOR CABLEWAYS, CRANES, DERRICKS, HOISTS, HOOKS, JACKS, AND SLINGS

(03)

B30 SERIES INTRODUCTION

GENERAL

This Standard is one of a series of safety standards on various subjects that have been formulated under the general auspices of the American National Standards Institute. One purpose of the Standard is to serve as a guide to governmental authorities having jurisdiction over subjects within the scope of the Standard. It is expected, however, that the Standard will find a major application in industry, serving as a guide to manufacturers, purchasers, and users of the equipment.

For the convenience of the user, the Standard has been divided into separate volumes.

B30.1 Jacks
B30.2 Overhead and Gantry Cranes (Top Running Bridge, Single or Multiple Girder, Top Running Trolley Hoist)
B30.3 Construction Tower Cranes
B30.4 Portal, Tower, and Pedestal Cranes
B30.5 Mobile and Locomotive Cranes
B30.6 Derricks
B30.7 Base Mounted Drum Hoists
B30.8 Floating Cranes and Floating Derricks
B30.9 Slings
B30.10 Hooks
B30.11 Monorails and Underhung Cranes
B30.12 Handling Loads Suspended From Rotorcraft
B30.13 Storage/Retrieval (S/R) Machines and Associated Equipment
B30.14 Side Boom Tractors
B30.15 Mobile Hydraulic Cranes
Note: B30.15-1973 has been withdrawn. The revision of B30.15 is included in the latest edition of B30.5.
B30.16 Overhead Hoists (Underhung)
B30.17 Overhead and Gantry Cranes (Top Running Bridge, Single Girder, Underhung Hoist)
B30.18 Stacker Cranes (Top or Under Running Bridge, Multiple Girder With Top or Under Running Trolley Hoist)
B30.19 Cableways
B30.20 Below-the-Hook Lifting Devices
B30.21 Manually Lever Operated Hoists
B30.22 Articulating Boom Cranes
B30.23 Personnel Lifting Systems
B30.24 Container Cranes[1]
B30.25 Scrap and Material Handlers
B30.26 Rigging Hardware[1]
B30.27 Material Placement Systems[1]
B30.28 Balance-Lifting Units[1]

If these standards are adopted for governmental use, the references to other national codes and standards in the specific volumes may be changed to refer to the corresponding regulations of the governmental authorities.

The use of cableways, cranes, derricks, hoists, hooks, jacks, and slings is subject to certain hazards that cannot be met by mechanical means but only by the exercise of intelligence, care, and common sense. It is therefore essential to have personnel involved in the use and operation of equipment who are competent, careful, physically and mentally qualified, and trained in the safe operation of the equipment and the handling of the loads. Serious hazards are overloading, dropping or slipping of the load caused by improper hitching or slinging, obstructing the free passage of the load, and using equipment for a purpose for which it was not intended or designed.

The Standards Committee fully realizes the importance of proper design factors, minimum or maximum sizes, and other limiting dimensions of wire rope or chain and their fastenings, sheaves, sprockets, drums, and similar equipment covered by the Standard, all of which are closely connected with safety. Sizes, strengths, and similar criteria depend on many different factors, often varying with the installation and uses. These factors depend on the condition of the equipment or material; the loads; the acceleration or speed of the ropes, chains, sheaves, sprockets, or drums; the type of attachments; the number, size, and arrangement of sheaves or other parts; environmental conditions causing corrosion or wear; and many variables that must be considered in each individual case. The rules given in the Standard must be interpreted accordingly, and judgment must be used in determining their application.

The Standards Committee will be glad to receive criticisms of this Standard's requirements and suggestions

[1] B30.24, B30.26, B30.27, and B30.28 are in the developmental stage.

Copyright ASME International
Provided by IHS under license with ASME
No reproduction or networking permitted without license from IHS
Not for Resale

for its improvement, especially those based on actual experience in application of the rules.

Suggestions for changes to the Standard should be submitted to the Secretary of the B30 Committee, ASME, Three Park Avenue, New York, NY 10016-5990, and should be in accordance with the following format:

(a) Cite the specific paragraph designation of the pertinent volume.

(b) Indicate the suggested change (addition, deletion, revision, etc.).

(c) Briefly state the reason and/or evidence for the suggested change.

(d) Submit suggested changes to more than one paragraph in the order that the paragraphs appear in the volume.

The B30 Committee will consider each suggested change in a timely manner in accordance with its procedures.

SECTION I: SCOPE OF B30 SERIES

This Standard applies to the construction, installation, operation, inspection, and maintenance of jacks; power-operated cranes, monorails, and crane runways; power-operated and manually operated derricks and hoists; lifting devices, hooks, and slings; and cableways.

This Standard does not apply to track and automotive jacks, railway or automobile wrecking cranes, shipboard cranes, shipboard cargo-handling equipment, well-drilling derricks, skip hoists, mine hoists, truck body hoists, car or barge pullers, conveyors, excavating equipment, or equipment falling within the scope of the following Committees: A10, A17, A90, A92, A120, B20, B56, and B77.

SECTION II: PURPOSE

This Standard is designed to

(a) guard against and minimize injury to workers, and otherwise provide for the protection of life, limb, and property by prescribing safety requirements

(b) provide direction to owners, employers, supervisors, and others concerned with, or responsible for, its application

(c) guide governments and other regulatory bodies in the development, promulgation, and enforcement of appropriate safety directives

SECTION III: INTERPRETATIONS

Upon request, the B30 Committee will render an interpretation of any requirement of the Standard. Interpretations can only be rendered in response to a written request sent to the Secretary of the B30 Committee, ASME, Three Park Avenue, New York, NY 10016-5990.

The request for interpretation should be clear and unambiguous. It is further recommended that the inquirer submit his request utilizing the following format.

Subject: Cite the applicable paragraph number(s) and provide a concise description.

Edition: Cite the applicable edition of the pertinent volume for which the interpretation is being requested.

Question: Phrase the question as a request for an interpretation of a specific requirement suitable for general understanding and use, not as a request for approval of a proprietary design or situation. The inquirer may also include any plans or drawings that are necessary to explain the question; however, they should not contain any proprietary names or information.

Requests that are not in this format will be rewritten in this format by the Committee prior to being answered, which could change the intent of the original request.

ASME procedures provide for reconsideration of any interpretation when or if additional information that might affect an interpretation is available. Further, persons aggrieved by an interpretation may appeal to the cognizant ASME Committee or Subcommittee. ASME does not "approve," "certify," "rate," or "endorse" any item, construction, proprietary device, or activity.

SECTION IV: NEW AND EXISTING INSTALLATIONS

(a) Effective Date. The effective date of this volume for the purpose of defining new and existing installations shall be 1 year after its date of issuance.

(b) New Installations. Construction, installation, inspection, testing, maintenance, and operation of equipment manufactured and facilities constructed after the effective date of this volume shall conform to the mandatory requirements of this volume.

(c) Existing Installations. Inspection, testing, maintenance, and operation of equipment manufactured and facilities constructed prior to the effective date of this volume shall be done, as applicable, in accordance with the requirements of this volume.

It is not the intent of this volume to require retrofitting of existing equipment. However, when an item is being modified, its performance requirement shall be reviewed relative to the current volume. If the performance differs substantially, the need to meet the current requirement shall be evaluated by a qualified person selected by the owner (user). Recommended changes shall be made by the owner (user) within 1 year.

Copyright ASME International
Provided by IHS under license with ASME
No reproduction or networking permitted without license from IHS
Not for Resale

SECTION V: MANDATORY AND ADVISORY RULES

Mandatory rules of this volume are characterized by use of the word *shall.* If a provision is of an advisory nature, it is indicated by use of the word *should* and is a recommendation to be considered, the advisability of which depends on the facts in each situation.

SECTION VI: METRIC CONVERSIONS

The values stated in U.S. Customary units are to be regarded as the standard.

Copyright ASME International
Provided by IHS under license with ASME
No reproduction or networking permitted without license from IHS
Not for Resale

ASME B30.20-2003
SUMMARY OF CHANGES

Following approval by the ASME B30 Committee and ASME, and after public review, ASME B30.20-2003 was approved by the American National Standards Institute on June 5, 2003.

ASME B30.20-2003 includes editorial changes, revisions, and corrections introduced in ASME B30.20a-2001, as well as the following changes identified by a margin note, **(03)**.

Page	*Location*	*Change*
v	Foreword	Revised
viii–x	Introduction	Revised
12	20-1.2.1	Subparagraphs (a), (b), and (c) revised
13	20-1.3.1	Subparagraph (b) revised
15	20-1.3.8.2	Subparagraph (c) revised
17	20-2.2.1	Subparagraphs (a), (b), (c), and (d) revised
20	20-2.3.8.1	Subparagraphs (a) and (b) revised
	20-2.3.8.2	Subparagraph (b) revised
23, 24	Section 20-3.2	Revised in its entirety
26	20-3.3.8.2	Subparagraph (d) revised
29	20-4.2.1	Revised in its entirety
31	20-4.3.7	Subparagraphs (a) and (b) revised
33	20-5.2.1	Revised in its entirety
34	20-5.3.7	Subparagraph (a) revised

SPECIAL NOTE:

The interpretations to ASME B30.20 are included in this edition as a separate section for the user's convenience.

Copyright ASME International
Provided by IHS under license with ASME
No reproduction or networking permitted without license from IHS
Not for Resale

Copyright ASME International
Provided by IHS under license with ASME
No reproduction or networking permitted without license from IHS
Not for Resale

BELOW-THE-HOOK LIFTING DEVICES

Chapter 20-0
Scope, Definitions, and References

SECTION 20-0.1: SCOPE OF ASME B30.20

Volume B30.20 includes provisions that apply to the marking, construction, installation, inspection, testing, maintenance, and operation of below-the-hook lifting devices, other than slings, used for attaching loads to hoist. The devices are arranged in five chapters as follows:

Chapter 20-1:	Structural and Mechanical Lifting Devices
Chapter 20-2:	Vacuum Lifting Devices
Chapter 20-3:	Close Proximity Operated Lifting Magnets
Chapter 20-4:	Remotely Operated Lifting Magnets
Chapter 20-5:	Scrap and Material Handling Grapples

SECTION 20-0.2: DEFINITIONS — GENERAL

administrative or regulatory authority: governmental agency, or the employer in the absence of governmental jurisdiction.

appointed: assigned specific responsibilities by the employer or the employer's representative.

authorized: appointed by a duly constituted administrative or regulatory authority.

designated load: the specified size, shape, and weight of material to be lifted.

designated person: a person selected or assigned by the employer or the employer's representative as being competent to perform specific duties.

normal operating conditions: conditions during which the lifter is performing functions within the scope of the original design.

qualified person: a person who, by possession of a recognized degree in an applicable field or certificate of professional standing, or who, by extensive knowledge, training, and experience, has successfully demonstrated the ability to solve or resolve problems relating to the subject matter and work.

rated load: the maximum load for which the equipment is designated by the manufacturer.

shall: indicates that the rule is mandatory and must be followed.

should: indicates that the rule is a recommendation, the advisability of which depends on the facts in each situation.

SECTION 20-0.3: DEFINITIONS FOR CHAPTER 20-1

chain/hand wheel: a device for manually operating a lifter.

friction-type pressure gripping lifters: lifters that grip the load without significant or harmful permanent deformation of the load surface (see Fig. 1).

grip ratio: the ratio of the sum of the horizontal forces on one side of the load to the live weight of the load. For example, if the total horizontal force on one side of the load is 100,000 lb and the live load is 50,000 lb, the grip ratio is 2. For purposes of this calculation, the weight of the load does not include the weight of the lifter (see Fig. 2).

gripping force: the force the lifting device exerts on the load.

indentation-type pressure gripping lifters: lifters that carry the load by applying force to indent the sides of the load (see Fig. 3).

ingot turnover grab: a manipulating lifter [Fig. 4, sketch (e)].

latch: a device for holding a lifter in the open or closed position.

latch, automatic: a sequencing latch mechanism operated by lifter motion.

lifting beam (spreader beam): a load supporting lifter [see Fig. 5, sketch (a)].

lock bar sheet lifter: a supporting lifter [see Fig. 5, sketch (j)].

manipulating lifter: a lifter that rotates the load about one or more axes during the lifting process (see Fig. 4).

Copyright ASME International
Provided by IHS under license with ASME
No reproduction or networking permitted without license from IHS
Not for Resale



(1)

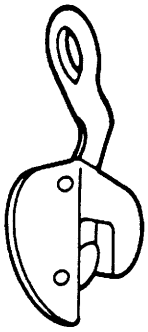

(2)

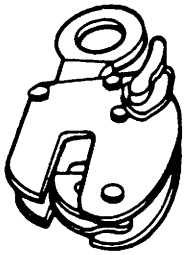

(3)
[Note (1)]

(a) Plate Clamps

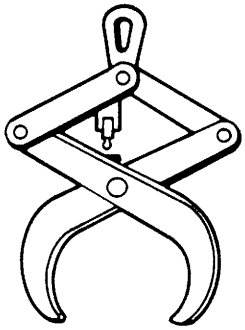

(b) Bar Tong

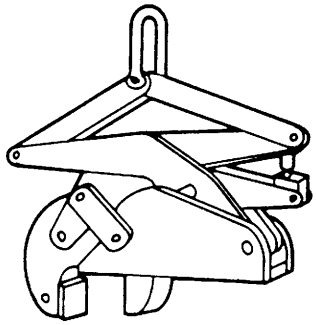

(c) Vertical Axis Coil Grab

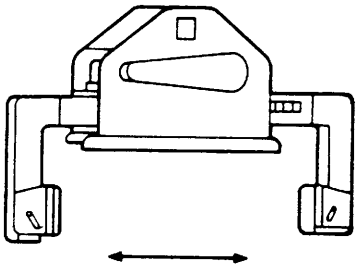

(d) Motor Driven Roll Grab, End Grip

(e) Roll Grab, Core Grip

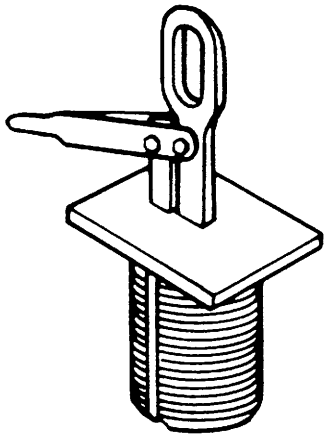

NOTE:
(1) Reproduced with permission from American National Standard Z229.1 – 1982, Safety Requirements for Shops Fabricating Structural Steel and Steel Plate, Copyright 1982 by the American National Standards Institute, Inc. (ANSI). Copies of this Standard may be purchased from ANSI, 25 West 43nd St. New York, NY 10036.

Fig. 1 Pressure Gripping Lifters: Friction-Type Lifters

Copyright ASME International
Provided by IHS under license with ASME
No reproduction or networking permitted without license from IHS Not for Resale

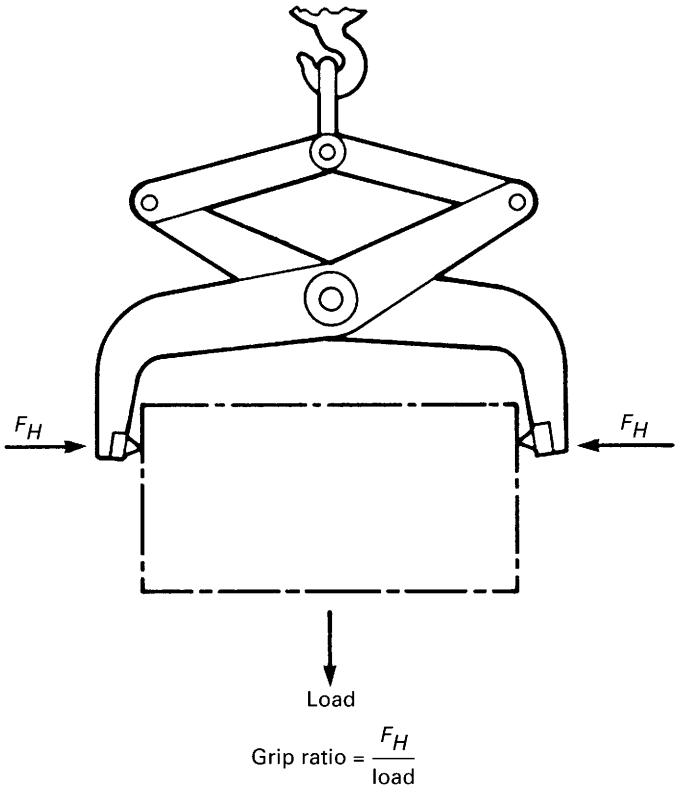

Fig. 2 Grip Ratio

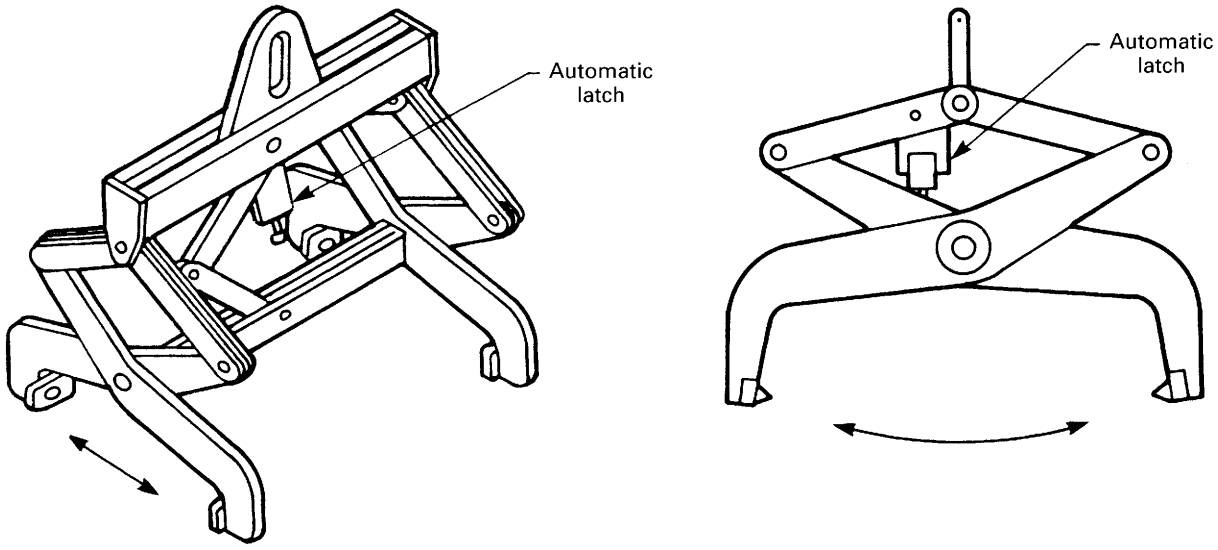

(a) Automatic Slab Tong (Four Point)

(b) Automatic Slab Tong (Two Point)

Fig. 3 Pressure Gripping Lifters: Indentation-Type Lifters

Copyright ASME International
Provided by IHS under license with ASME
No reproduction or networking permitted without license from IHS
Not for Resale

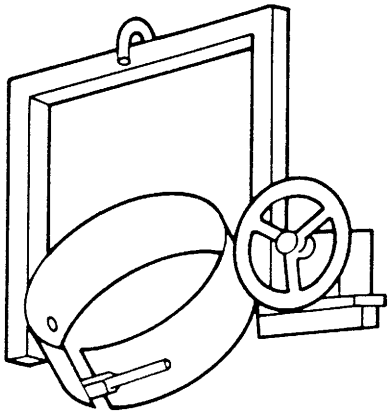

(a) Drum Turner

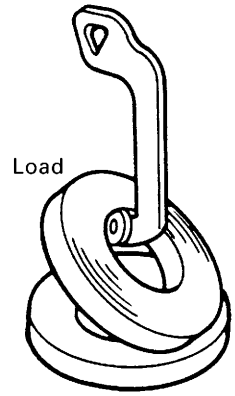

(b) Coil Positioning Hook

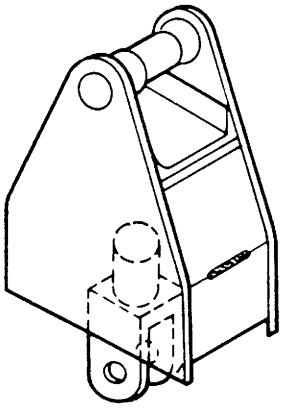

(c) Power Rotator

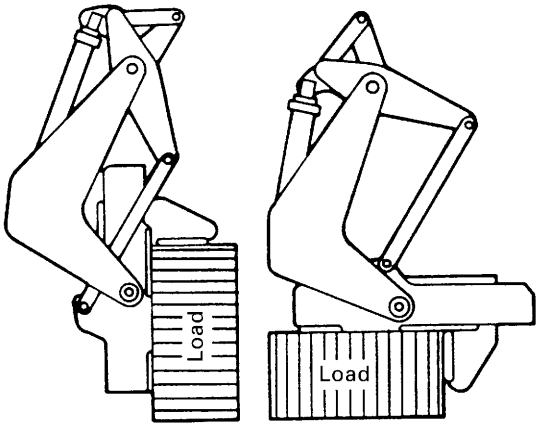

(d) Crane Suspended Coil Positioner

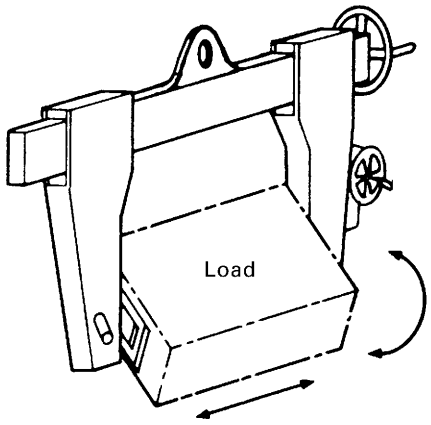

(e) Ingot Turner Grab

Fig. 4 Manipulating Lifters

Copyright ASME International
Provided by IHS under license with ASME
No reproduction or networking permitted without license from IHS Not for Resale

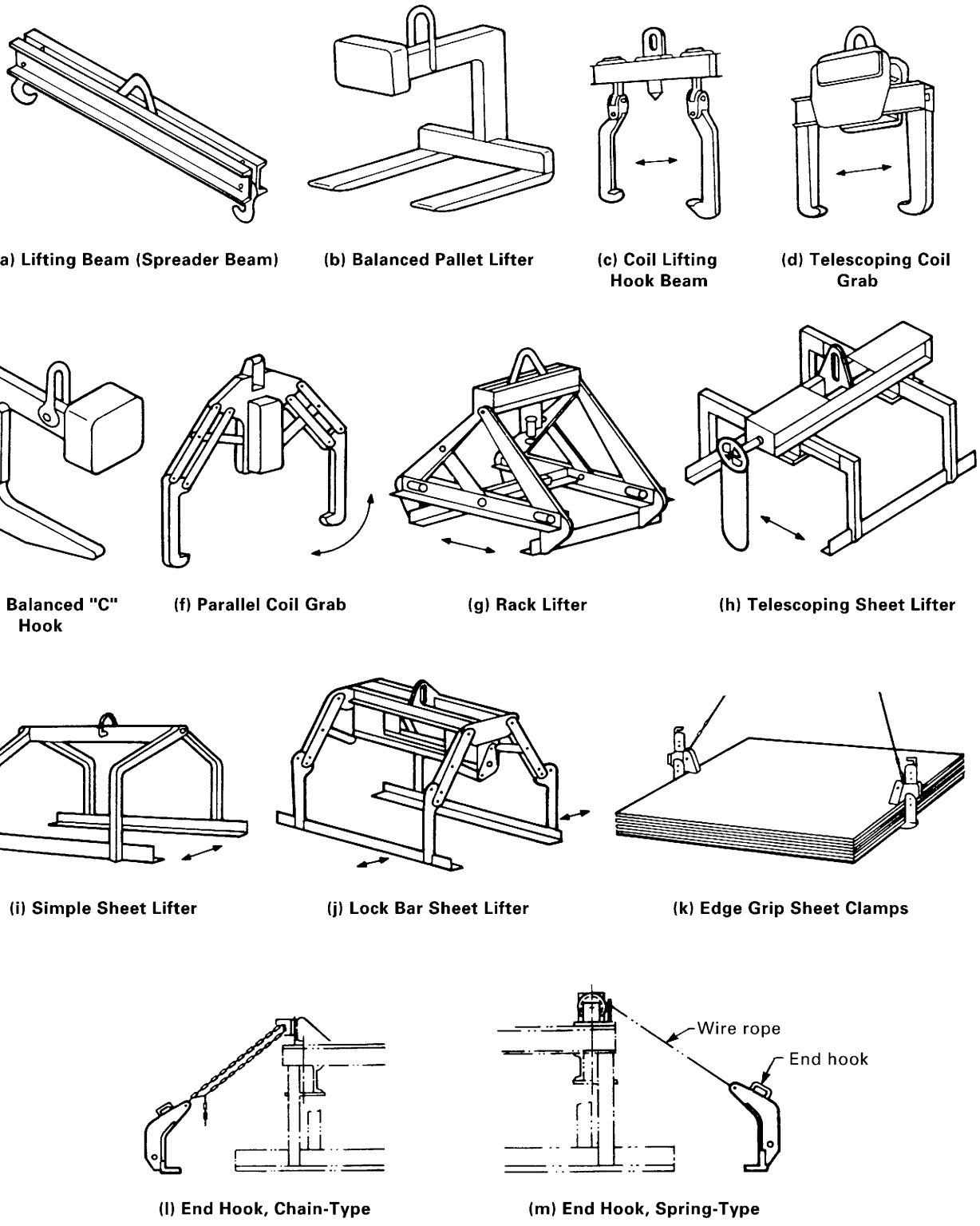

Fig. 5 Load Supporting Lifters

Copyright ASME International
Provided by IHS under license with ASME
No reproduction or networking permitted without license from IHS
Not for Resale

mechanical lifting device: a mechanism composed of two or more rigid parts which move with respect to each other for attaching a load to a hoisting device.

service, heavy: that service which involves operation within the rated load limit that exceeds normal service.

service, normal: that distributed service which involves operation with various weights within the rated load limit, or uniform loads less than 65% of rated load.

service, severe: that service which involves normal or heavy service with abnormal operating conditions.

structural lifting device: a lifter consisting of an assembly of rigid parts designed to hold and attach a load to a hoisting device.

supporting lifter: a lifter that carries the load on rigid projection(s) or bearing surface(s) (see Fig. 5).

SECTION 20-0.4: DEFINITIONS FOR CHAPTER 20-2

breakaway force: the external force that is required to separate the vacuum pad or vacuum lifting device from the load when applied perpendicular to the attachment surface.

four-pad powered vacuum lifter: see Fig. 6, sketch (d).

four-pad powered vacuum lifter manipulator: see Fig. 6, sketch (e).

high-temperature surface: a condition where the surface to which the vacuum pad (or pads) is attached is above 250°F (120°C).

horizontal lift: a condition where the surface to which the vacuum pad (or pads) is attached is in a horizontal plane.

low-temperature service: a condition where the surface to which the vacuum pad (or pads) is attached is below 0°F (−18°C).

multiple-pad mechanical vacuum lifter: see Fig. 6, sketch (c).

nonporous material: a material that is not permeable by fluid.

peel off: a prying action that takes place when deflection of an overhanging load exceeds the compensating ability of the vacuum pad or vacuum lifting device, resulting in loss of load.

porous material: a material that is permeable by fluid.

sealing ring: that part of the vacuum pad which forms the seal of the vacuum chamber between the vacuum pad body or vacuum lifting device and the attached material.

service, heavy: that service which involves operation within the rated load limit that exceeds normal service.

service, normal: that distributed service which involves operation with various weights within the rated load limit, or uniform loads less than 65% of rated load.

service, severe: that service which involves normal or heavy service with abnormal operating conditions.

shear breakaway force: the external force that is required to separate or slide the vacuum pad or vacuum lifting device on the load when the force is applied parallel to the attached load surface.

single-pad mechanical vacuum lifter: see Fig. 6, sketch (b).

two-pad mechanical vacuum lifter: see Fig. 6, sketch (a).

vacuum: pressure less than ambient atmospheric pressure.

vacuum lifter: a below-the-hook lifting device for lifting and transporting loads in a fixed attitude using a holding force by means of vacuum (see Fig. 6).

vacuum manipulator: a vacuum lifter capable of repositioning the load while suspended.

vacuum pad: a device that applies a holding force on the load by means of vacuum.

vacuum reservoir: the evacuated portion of the vacuum system whose function is to compensate for leakage into the vacuum system or to provide a vacuum reserve in the event of vacuum generator failure.

vertical lift: a condition where the surface to which a vacuum pad is attached is in a vertical plane.

SECTION 20-0.5: DEFINITIONS FOR CHAPTER 20-3

battery system (backup): batteries used to guard against inadvertent load release due to the loss of primary power to the magnet system.

cold current: that current drawn by the lifting magnet when its coil is at 68°F (20°C) and at rated voltage.

duty cycle: an 8, 16, or 24 hr rating with

$$\text{duty cycle} = \frac{\text{time on}}{\text{time on + time off}} \times 100$$

and is expressed as a percentage (with a maximum of 10 min time on to avoid overheating the lifting magnet).

EXAMPLE: 3 min on, 2 min off equal:

$$3/(3 + 2) \times 100 = 60\%$$

force, breakaway: the force that must be applied to a lifting magnet to remove it from a piece of ferromagnetic material to which it is magnetically attached.

indicator, internal control function: an indicator which shows that the permanent magnet material in one type of electrically controlled permanent magnet has been positioned internally to provide full magnetic attraction.

load (capacity), rated: the maximum load that the lifting magnet is designated to handle by the manufacturer.

load (capacity), specified application: a load applied to the lifting magnet when it is used to handle a specified load.

Copyright ASME International
Provided by IHS under license with ASME
No reproduction or networking permitted without license from IHS
Not for Resale

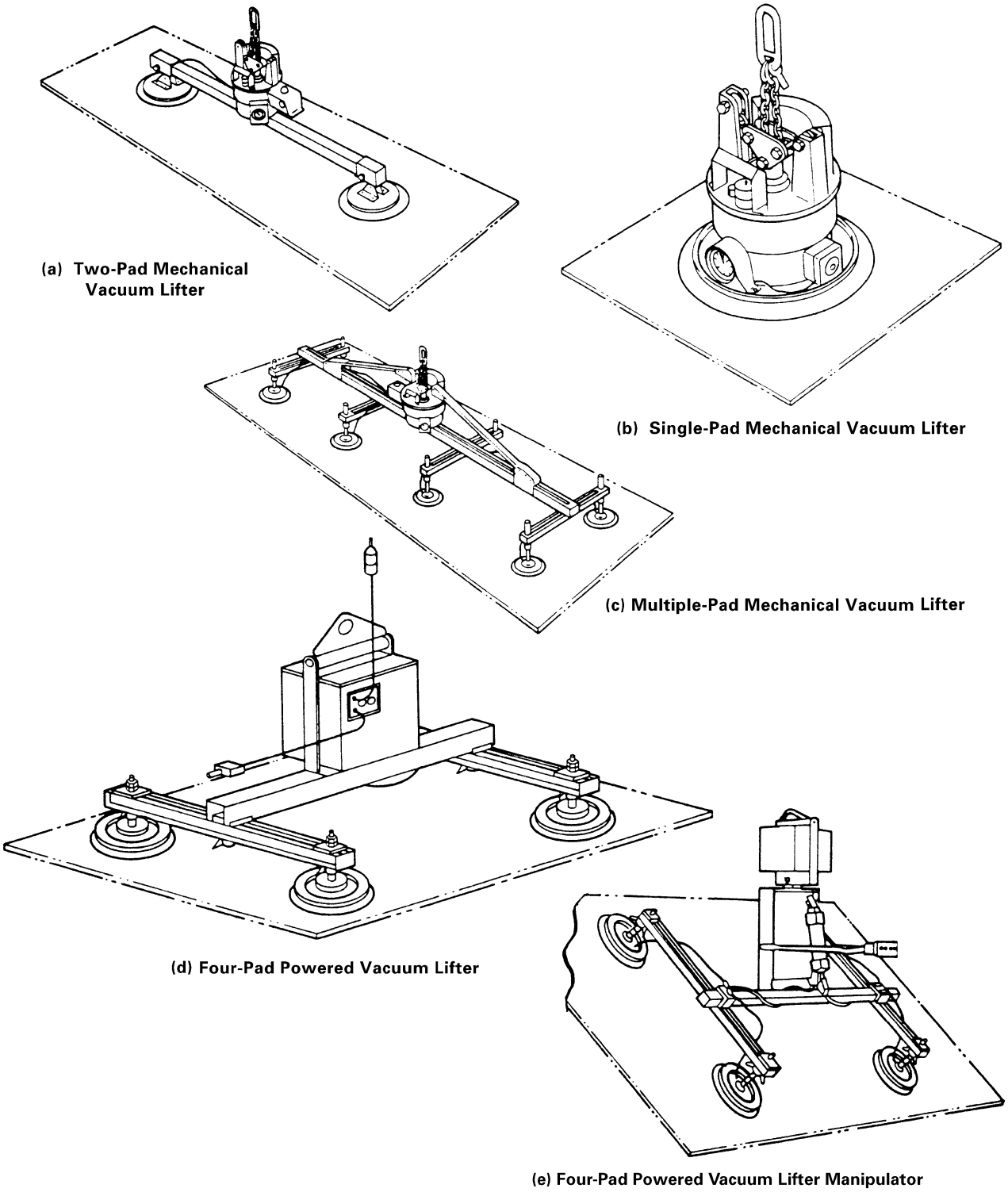

Fig. 6 Vacuum Lifters

Copyright ASME International
Provided by IHS under license with ASME
No reproduction or networking permitted without license from IHS
Not for Resale

load (maximum), specified: a load identified by a part number or other controlled definition.

magnet, lifting:

electromagnet, battery-powered: a lifting magnet that requires continuous current supplied by a battery to maintain holding force [see Fig. 7, sketch (a)].

electromagnet, externally powered: a lifting magnet suspended from a crane that requires power from a source external to the crane.

permanent magnet, electrically controlled: a lifting magnet that derives holding force from permanent magnet material and requires current only during the period of attachment or release [see Fig. 7, sketch (b)].

permanent magnet, manually controlled: a lifting magnet that derives holding force from permanent magnet material and requires a manual effort during period of attachment or release [see Fig. 7, sketch (c)].

magnet, lifting, close proximity operated: a lifting magnet used in such a fashion that the operator manually positions the lifting magnet on the load, and manually guides the lifting magnet and load during a lift.

magnet, lifting, general application: lifting magnets that are intended by the manufacturer to be used on a number of different geometrical shapes and do not fall under the category of remotely operated lifting magnets.

magnet, lifting, remotely operated: a lifting magnet that does not require the operator or other personnel to be in close proximity to the lifting magnet or its load while the lifting magnet is in use.

magnet, lifting, specified application: lifting magnets that are designed for lifting specified geometrical configurations and weights of designated parts, identified by part number or other controlled definition and used in a controlled manner.

service, heavy duty: that service which involves operation within the rated load limit that exceeds normal service.

service, normal: rated load (capacity) at 50% duty cycle over one shift (8 hr).

service, severe: that service which involves normal or heavy service with abnormal operating conditions.

test, application breakaway force: a test that is carried out in accordance with instructions from the manufacturer of the lifting magnet in order to establish the application breakaway force.

test, breakaway force: a test that is carried out per para. 20-3.3.8.2 in order to establish the rated breakaway force.

SECTION 20-0.6: DEFINITIONS FOR CHAPTER 20-4

cold current: that current drawn by the lifting magnet when its coil is at 68°F (20°C) and at rated voltage.

duty cycle: an 8, 16, or 24 hr rating with

$$\text{duty cycle} = \frac{\text{time on}}{\text{time on + time off}} \times 100$$

and is expressed as a percentage (with a maximum of 10 min time on to avoid overheating the lifting magnet).

EXAMPLE: 3 min on, 2 min off equal:

$$3/(3 + 2) \times 100 = 60\%$$

load (capacity), rated: the maximum load that the lifting magnet is designated to handle by the manufacturer.

magnet, lifting, close proximity operated: a lifting magnet used in such a fashion that the operator manually positions the lifting magnet on the load, and manually guides the lifting magnet and load during a lift.

magnet, lifting, remotely operated: a lifting magnet that does not require the operator or other personnel to be in close proximity to the lifting magnet or its load while the lifting magnet is in use [see Fig. 7, sketches (d) and (e)].

magnet, lifting, submersible: a special lifting magnet that has been designed to be immersed in liquid.

service, heavy duty: that service which involves operation within the rated load limit that exceeds normal service.

service, normal: rated load (capacity) at 50% duty cycle over one shift (8 hr).

service, severe: that service which involves normal or heavy service with abnormal operating conditions.

SECTION 20-0.7: DEFINITIONS FOR CHAPTER 20-5

rated capacity: the volume of scrap/material that can be handled with the grapple closed and the tine tips touching. This is to be expressed in cubic yards or cubic meters.

scrap and material handling grapples: various types of scrap and material handling grapples are shown in Fig. 8.

tine: the hinged portion of the grapple that comes in contact with or encompasses the load.

SECTION 20-0.8: REFERENCES TO OTHER CODES AND STANDARDS

Within the text, references are made to the following publications, copies of which may be obtained from the publishers as indicated. Copies of American National Standards may be obtained from the American National Standards Institute, Inc. (ANSI), 25 West 43rd Street, New York, NY 10036.

ANSI/AWS D14.1-97, Specification for Welding Industrial and Mill Cranes and Other Material Handling Equipment

Publisher: American Welding Society (AWS), 550 NW Le Jeune Road, Miami, FL 33126

Copyright ASME International
Provided by IHS under license with ASME
No reproduction or networking permitted without license from IHS
Not for Resale

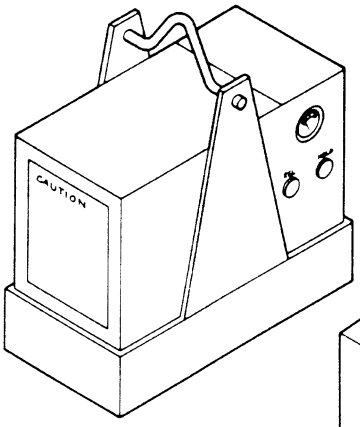

(a) Close Proximity Operated Lifting Electromagnet

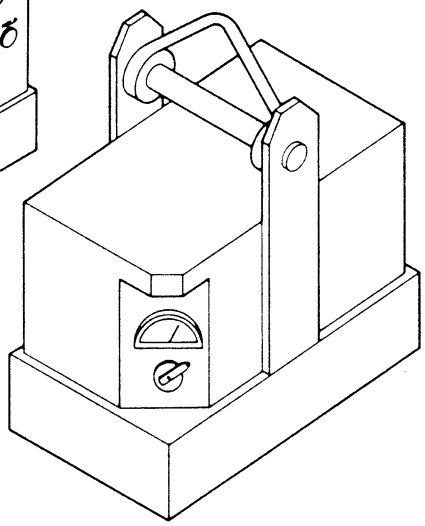

(b) Close Proximity Operated Electrically Controlled Permanent Magnet

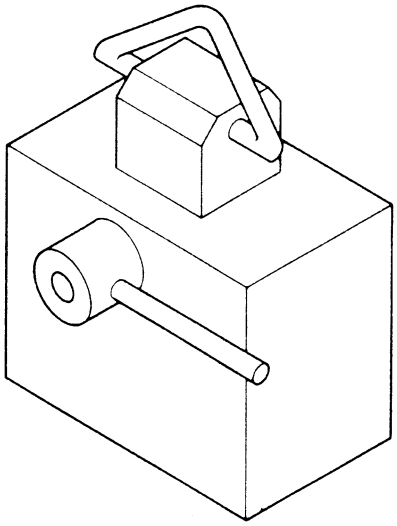

(c) Close Proximity Operated Manually Controlled Permanent Magnet

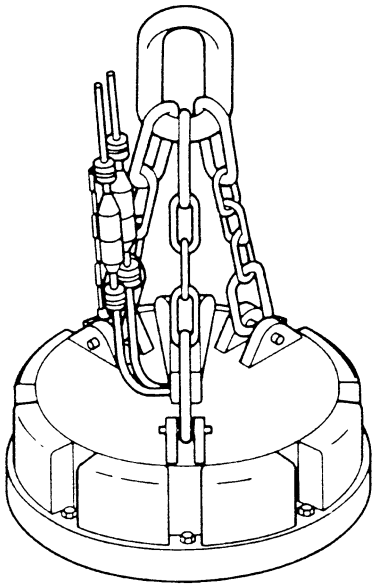

(d) Remote Operated Lifting Electromagnet — Circular

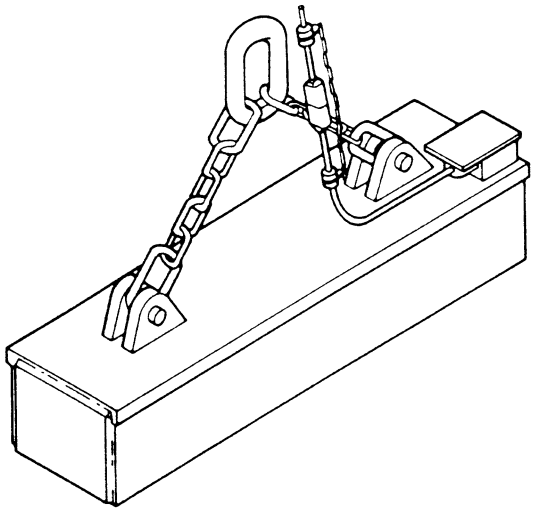

(e) Remote Operated Lifting Electromagnet — Rectangular

Fig. 7 Magnetic Lifters

Copyright ASME International
Provided by IHS under license with ASME
No reproduction or networking permitted without license from IHS
Not for Resale

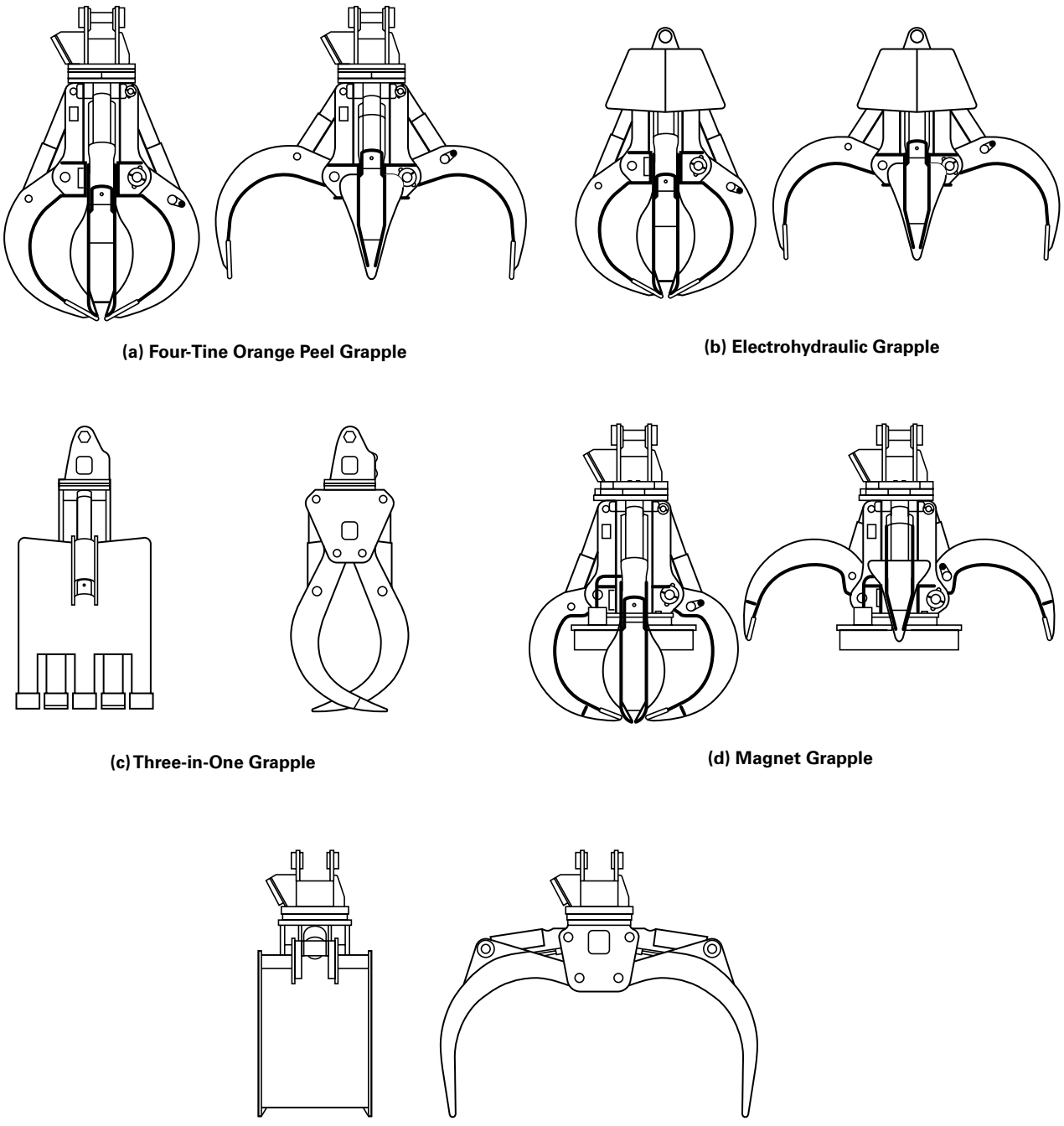

(a) Four-Tine Orange Peel Grapple

(b) Electrohydraulic Grapple

(c) Three-in-One Grapple

(d) Magnet Grapple

(e) Car Body Grapple

Fig. 8 Scrap and Material-Handling Grapples

Copyright ASME International
Provided by IHS under license with ASME
No reproduction or networking permitted without license from IHS
Not for Resale

ANSI/NFPA 70-2002, National Electrical Code

Publisher: National Fire Protection Association (NFPA), 1 Batterymarch Park, Quincy, MA 02269

ANSI Z535.4-1998, Product Safety Signs and Labels

ICS l–ICS 6, 1978, Industrial Control and Systems

Publisher: National Electrical Manufacturers Association (NEMA), 1300 North 17th Street, Rosslyn, VA 22209

ASME B30.9-1996, Slings

ASME B30.10-1999, Hooks

Publisher: American Society of Mechanical Engineers (ASME International), Three Park Avenue, New York, NY 10016-5990; ASME Order Department: 22 Law Drive, Box 2300, Fairfield, NJ 07007-2300

Specification for the Design, Fabrication and Erection of Structural Steel for Buildings, 8th Edition Manual, 1980

Publisher: American Institute of Steel Construction (AISC), 1 East Wacker Drive, Chicago, IL 60611

Copyright ASME International
Provided by IHS under license with ASME
No reproduction or networking permitted without license from IHS
Not for Resale

Chapter 20-1
Structural and Mechanical Lifting Devices

SECTION 20-1.1: SCOPE

Chapter 20-1 applies to the classification, marking, construction, installation, inspection, testing, maintenance, and operation of structural and mechanical lifting devices. Within Chapter 20-1, the structural and mechanical lifters/lifting devices are categorized as supporting lifters, indentation-type pressure gripping lifters, and friction-type pressure gripping lifters.

SECTION 20-1.2: MARKING, CONSTRUCTION, AND INSTALLATION

(03) 20-1.2.1 Marking

(a) Rated Load. The rated load of the lifting device shall be legibly marked on the main structure or on a tag attached to it where it is visible. If the lifting device is made up of several lifters, each detachable from the group, these lifters shall also be marked with their individual rated loads.

(b) Identification. All new lifting devices shall be marked with, but not limited to, the following information:

(1) manufacturer's name and address
(2) serial number
(3) lifter weight, if over 100 lb (45 kg)
(4) rated load
(5) cold current (amps) (when applicable)
(6) rated voltage (when applicable)

(c) Repaired or Modified Lifters. All repaired or modified lifters shall be marked with identification displaying, but not limited to, the following information:

(1) name and address of the repairer or modifier
(2) repairer's or modifier's lifter identification
(3) lifter weight, if altered
(4) rated load, if altered [as described in para. 20-1.2.1(a)]
(5) cold current (amps), if altered
(6) rated voltage, if altered

(d) Product Safety Labels

(1) Where size and shape of the lifter allow, all lifters shall have labels, affixed to them in a readable position, that include the appropriate signal word, according to ANSI Z535.4-1998 (4.13), to bring the label to the attention of the operator. The label should include cautionary language to provide danger, warning, or caution notice to operators and others against

(a) exceeding the rated load, or lifting loads not specified in the instruction manual
(b) operating a damaged or malfunctioning unit, or a unit with missing parts
(c) lifting people
(d) lifting suspended loads over people
(e) leaving suspended loads unattended
(f) removing or obscuring warning labels
(g) operating without having read and understood the operating manual
(h) not staying clear of the suspended load
(i) lifting loads higher than necessary
(j) making alterations or modifications to lifter

(2) Where size or shape of the lifter prohibits the inclusion of all or any such markings, a label shall be affixed, referring user to consult manufacturer's instruction manual for product safety information.

20-1.2.2 Construction

The load-bearing structural components of a lifter shall be designed to withstand the stresses imposed by its rated load plus the weight of the lifter, with a minimum design factor of three, based on yield strength of the material, and with stress ranges that do not exceed the values given in ANSI/AWS D14.1 for the applicable conditions.

(a) Welding. All welding shall be in accordance with ANSI/AWS D14.1.

(b) Guards for Moving Parts. Exposed moving parts, such as, but not limited to, gearing, projecting shafts, and chain drives, that constitute a hazard under normal operating conditions, should be guarded.

(c) Electrical Equipment. External power supply, electrical equipment, and wiring for below-the-hook lifters shall comply with ANSI/NFPA 70.

(d) Modifications. Structural and mechanical lifters may be modified or rerated, provided such modifications are analyzed and approved by the equipment manufacturer or a qualified person. A rerated lifter, or one whose components have been modified, shall conform to para. 20-1.2.2 and be tested according to para. 20-1.3.8. New rated load shall be displayed in accordance with para. 20-1.2.1.

20-1.2.3 Installation

(a) The lifter shall be installed in accordance with the manufacturer's instructions.

Copyright ASME International
Provided by IHS under license with ASME
No reproduction or networking permitted without license from IHS
Not for Resale

(b) The installer shall check for correct rotation of all motors.

SECTION 20-1.3: INSPECTION, TESTING, AND MAINTENANCE

(03) 20-1.3.1 Inspection Classification

(a) Initial Inspection

(1) New and reinstalled lifters shall be inspected by a designated person prior to initial use to verify compliance with applicable provisions of this volume.

(2) Altered, repaired, or modified lifters shall be inspected by a designated person. The inspection may be limited to the provisions affected by the alteration, repair, or modification, as determined by a qualified person.

(b) Inspection Intervals. Inspection procedure for lifters in regular service is divided into three general classifications based upon the intervals at which inspection should be performed. The intervals, in turn, are dependent upon the critical components of the lifters and the degree of their exposure to wear, deterioration, or malfunction. The three general classifications are herein designated as *every lift*, *frequent*, and *periodic*, with respective intervals between inspections as defined below.

(1) Every Lift Inspection. Visual examination by the operator before and during each lift made by the lifter.

(2) Frequent Inspection. Visual examinations by the operator or other designated persons with records not required.

(a) Normal service — monthly

(b) Heavy service — weekly to monthly

(c) Severe service — daily to weekly

(d) Special or infrequent service — as recommended by a qualified person before and after each occurrence

(3) Periodic Inspection. Visual inspection by a qualified person making records of apparent external conditions to provide the basis for a continuing evaluation. An external code mark on the lifter is an acceptable identification in lieu of records.

(a) Normal service for equipment in place — yearly

(b) Heavy service [as in (a) above, unless external conditions indicate that disassembly should be done to permit detailed inspection] — semiannually

(c) Severe service [as in (b) above] — quarterly

(d) Special or infrequent service — as recommended by a qualified person before the first such occurrence and as directed by the qualified person for any subsequent occurrences

20-1.3.2 Every Lift Inspection

Items such as the following shall be inspected by the operator before and/or during every lift for any indication of damage as specifically indicated, including observations during operation for any damage that might occur during the lift:

(a) surface of the load for debris

(b) condition and operation of the controls

(c) condition and operation of the indicators and meters when installed

20-1.3.3 Frequent Inspection (See Also Table 1)

Items such as the following shall be inspected for damage at intervals as defined in para. 20-1.3.1(b)(2), including observations during operation for any indications of damage that might appear between inspections. A qualified person shall determine whether any indications of damage constitute a hazard or will require more frequent inspection. For all lifters, inspect:

(a) structural members for deformation, cracks, or excessive wear on any part of the lifter

(b) loose or missing guards, fasteners, covers, stops, or nameplates

(c) all functional operating mechanisms and automatic hold-and-release mechanisms for misadjustments interfering with operation

20-1.3.4 Periodic Inspection (See Also Table 1)

Complete inspection of the lifter shall be performed at intervals as defined in para. 20-1.3.1(b)(3). Any deficiencies, such as listed below, shall be examined and determination made as to whether they constitute a hazard. These inspections shall include the requirements of para. 20-1.3.3 and, in addition, items such as the following:

(a) loose bolts or fasteners

(b) cracked or worn gears, pulleys, sheaves, sprockets, bearings, chains, and belts

(c) excessive wear of friction pads, linkages, and other mechanical parts

(d) excessive wear at hoist hooking points and load support clevises or pins

20-1.3.5 Lifting Devices Not in Regular Use

A lifter that has been idle for a period of 1 month or more is to be given an inspection in accordance with para. 20-1.3.3 before being placed in service.

20-1.3.6 Inspection Records

Dated inspection reports shall be made on critical items such as those listed in para. 20-1.3.4. Records should be available to appointed personnel for each periodic inspection and when the lifter is either modified or repaired.

Copyright ASME International
Provided by IHS under license with ASME
No reproduction or networking permitted without license from IHS Not for Resale

Copyright ASME International
Provided by IHS under license with ASME
No reproduction or networking permitted without license from IHS

Table 1 Minimum Inspection for Below-the-Hook Lifting Devices

Item	Normal Service		Heavy Service		Severe Service	
	Visual, Monthly [Note (1)]	Record Yearly [Note (2)]	Visual, Weekly to Monthly [Note (1)]	Record Semiannually [Note (3)]	Visual, Daily to Weekly [Note (3)]	Record Quarterly [Note (3)]
Frequent Inspection (refer to para. 20-1.3.3) — structural deformation, cracks, or excessive wear of any part of the lifter	×	...	×	...	×	...
Loose or missing guards, fasteners, covers, stops, or nameplates	×	...	×	...	×	...
All functional operating mechanisms and automatic hold and release mechanisms for misadjustments interfering with operation	×	...	×	...	×	...
Periodic Inspection (refer to para. 20-1.3.4) — loose bolts or fasteners	...	×	...	×	...	×
Cracked or worn gears, pulleys, sheaves, sprockets, bearings, chains, and belts	...	×	...	×	...	×
Excessive wear of linkages and other mechanical parts	...	×	...	×	...	×
Excessive wear at hoist hooking points and load support clevises, or pins	...	×	...	×	...	×

NOTES:
(1) By operator or designated person with records not required.
(2) Visual inspection by designated person making records of apparent external conditions to provide the basis for a continuing evaluation.
(3) As in Note (2) unless external conditions indicate that disassembly should be done to permit detailed inspection.

Not for Resale

20-1.3.7 Repairs

Any indications of damage disclosed by the inspection requirements of Section 20-1.3 shall be corrected according to the procedures outlined in para. 20-1.3.9 before operation of the lifter is resumed.

20-1.3.8 Testing

20-1.3.8.1 Operational Tests

(a) New and reinstalled lifting devices shall be tested by a qualified person, or a designated person under the direction of a qualified person, prior to initial use to verify compliance with applicable provisions of this volume, including, but not limited to, the following:

(1) Moving Parts. Lifters with moving parts shall be tested to determine that the lifter operates in accordance with manufacturer's instructions.

(2) Latches. Lifters with manually operated or automatic latches shall be tested to determine that the latch operates in accordance with manufacturer's instructions.

(b) Altered, repaired, or modified lifters shall be tested by a qualified person, or a designated person under the direction of a qualified person. This test may be limited to the provisions affected by the alteration, repair, or modification, as determined by a qualified person with guidance from the manufacturer.

(c) All indicator lights, gages, horns, bells, alarms, pointers, and other warning devices shall be tested.

(d) Dated reports of all operational tests shall be filed.

(03) **20-1.3.8.2 Load Test**

(a) Prior to initial use, all new, altered, modified, or repaired lifting devices should be tested and inspected by, or under the direction of, a qualified person and a written report be furnished by such a person, confirming the load rating of the lifter. The load rating should not be more than 80% of the maximum load sustained during the test. Test loads shall not be more than 125% of the rated load unless otherwise recommended by the manufacturer. Test reports should be available.

(b) The load test, if made, shall consist of the following operations as a minimum requirement:

(1) Hoist the test load a sufficient distance to ensure the load is supported by the lifter, or apply the required load if the test is made using a testing machine.

(2) After the test load is released, visually inspect the lifter for deformation, cracks, or other defects.

(c) Altered, repaired, or modified lifters shall be tested by, or under the direction of, a qualified person. This test may be limited to the provisions affected by the alteration, repair, or modification, as determined by a qualified person with guidance from the manufacturer.

20-1.3.9 Maintenance

(a) Maintenance Program. A maintenance program should be established and be based on recommendations made by the lifter manufacturer or a qualified person.

(b) Maintenance Procedure

(1) Before adjustments and repairs are started on a lifter, the following precautions shall be taken:

(a) All sources of power shall be disconnected, locked out, and tagged "Out of Service."

(b) A lifter removed from service for repair shall be tagged "Out of Service."

(2) Only qualified persons shall perform adjustments and tests when required.

(3) Replacement parts shall be at least equal to the original manufacturer's specifications.

(4) After adjustments and repairs have been made, the lifter shall not be returned to service until it has been inspected according to para. 20-1.3.4.

(5) Dated records of repairs and replacements should be made.

(6) Adjustments and Repairs. Any hazardous conditions disclosed by the inspection requirements of para. 20-1.3.1 shall be corrected before normal operation of the lifter is resumed. Adjustments and repairs shall be done under the direction of, or by, a qualified person.

SECTION 20-1.4: OPERATION

20-1.4.1 Operators

Below-the-hook lifting devices shall be operated only by trained, designated persons.

20-1.4.2 Qualifications

Qualifications for operators of below-the-hook lifting devices are as follows.

(a) The operator shall be instructed in the use of the device by a designated person. Instructions should include, but not be limited to, the following:

(1) application of the lifter to the load and adjustments, if any, that adapt the lifter to various sizes or kinds of loads

(2) instructions in any special operations or precautions

(3) the manufacturer's suggested operating procedures

(4) condition of the load itself required for operation of the lifter, such as, but not limited to, balance, surface cleanliness, flatness, bending, and load thickness

(5) storage of the lifter to protect it from damage

(6) not exceeding the rated load of the lifting device nor the capacity of the hoisting equipment by the combined weight of the load, the lifting device, and rigging

(7) the proper attachment of adapters to lifting device for special load handling

Copyright ASME International
Provided by IHS under license with ASME
No reproduction or networking permitted without license from IHS Not for Resale

(b) The operator shall demonstrate the ability to operate the lifter as instructed before assuming responsibility for using the lifter.

20-1.4.3 Conduct of Lifting Device Operators

(a) The operator shall give attention to the operation of the lifts during a lifting sequence.

(b) When physically or otherwise unfit, an operator shall not engage in the operation of the equipment.

(c) Operators shall be responsible for those operations under their direct control. Whenever there is any doubt as to safety, the operator shall consult a designated person before handling the load.

(d) The operator shall respond only to instructions from designated persons. However, the operator shall obey a stop order at all times, no matter who gives it.

(e) The operation of the lifter shall be observed before use and during a shift. Any deficiency observed shall be carefully examined by a designated person. If the deficiency constitutes a hazard, the lifter shall be removed from service and tagged "Out of Service." Any indication of a hazardous condition shall be reported to a qualified person for evaluation.

(f) The operator shall be familiar with standard hand signals when applicable.

(g) The operator shall land any attached load and store the lifter before leaving the lifting device.

(h) All controls shall be tested by the operator before use during a shift. If any controls do not operate properly, they should be adjusted or repaired before operations are begun.

(i) The operator shall not ride, or allow others to ride, loads or the lifting device.

(j) The operator and other personnel shall stay clear of the load.

20-1.4.4 Lifting Device Operating Practices

(a) Lifting devices shall be operated only by the following qualified personnel:

(1) designated persons

(2) trainees under the direct supervision of a designated person

(3) maintenance and test personnel, when it is necessary in the performance of their duties

(4) inspectors (lifting devices)

(b) The lifting device shall not be loaded in excess of its rated load or handle any load for which it is not designed.

(c) The lifter shall be applied to the load in accordance with the instruction manual.

(d) Before lifting, the operator shall make sure that lifter ropes or chains are not kinked, and that multiple part lines are not twisted around each other.

(e) Care should be taken to make certain the load is correctly distributed for the lifter being used.

(f) The temperature of the load should not exceed the maximum allowable limits of the lifter.

(g) The lifter shall be brought over the load in such a manner as to minimize swinging.

(h) Care shall be taken that there is not sudden acceleration or deceleration of the load.

(i) Do not allow load or lifter to come into contact with any obstruction.

(j) The operator shall avoid carrying the load over people.

(k) The lifter shall not be used for side pulls or sliding the load unless specifically authorized by a qualified person.

(l) The operator shall not leave suspended loads unattended.

20-1.4.5 Miscellaneous Operating Practices

(a) An operator shall not use a lifting device that is tagged "Out of Service" or otherwise designated as nonfunctioning.

(b) "Out of Service" tags on lifting devices shall not be removed without the approval of the person placing them or an authorized person.

(c) The lifter, when not in use, should be stored at an assigned location.

(d) Caution should be taken that operating markings or tags shall not be removed or defaced. Missing or illegible markings or tags shall be replaced.

SECTION 20-1.5: INSTRUCTION MANUALS

The manufacturer shall provide operating instructions, and maintenance and parts information.

Copyright ASME International
Provided by IHS under license with ASME
No reproduction or networking permitted without license from IHS Not for Resale

Chapter 20-2
Vacuum Lifting Devices

SECTION 20-2.1: SCOPE

Chapter 20-2 applies to the marking, construction, installation, inspection, testing, maintenance, and operation of vacuum below-the-hook lifting devices. The provisions of Chapter 20-2 apply to all power operated and mechanically operated vacuum lifting and manipulating devices, except those vacuum lifting devices handling porous materials that require special design construction.

SECTION 20-2.2: MARKING, CONSTRUCTION, AND INSTALLATION

(03)

20-2.2.1 Marking

(a) Rated Load. The rated load, maximum width, maximum length, and minimum thickness of the load shall be legibly marked on the main structure or on a tag attached to it where it is visible. If the vacuum lifting device has shutoff valves on individual pads or groups of pads, the rated load of each pad shall also be marked.

(b) Identification. All new vacuum lifting devices shall be marked with, but not limited to, the following information:

(1) manufacturer's name and address

(2) model number

(3) serial number

(4) vacuum lifting device weight

(5) cold current (amps) (when applicable)

(6) pressure and volume of compressed air (when applicable)

(7) rated load [as described in (a) above]

(8) rated voltage (when applicable)

(c) Repaired or Modified Vacuum Lifting Devices. All repaired or modified vacuum lifting devices shall be marked with identification displaying, but not limited to, the following information:

(1) name and address of the repairer or modifier

(2) repairer's or modifier's vacuum lifting device identification

(3) vacuum lifting device weight, if altered

(4) cold current (amps), if altered

(5) rated load, if altered [as described in (a) above]

(d) Product Safety Labels

(1) Where size and shape of the lifter allow, all vacuum lifting devices shall have labels, affixed to them in a readable position, that include the appropriate signal word, according to ANSI Z535.4-1998 (4.13), to bring the label to the attention of the operator. The label should include cautionary language to provide danger, warning, or caution notice to operators and others against

(a) exceeding the rated load, or lifting loads not specified in the instruction manual

(b) operating a damaged or malfunctioning lifter, or a lifter with missing parts

(c) operating when the vacuum indicator or indicators show inadequate vacuum

(d) operating when the vacuum pads are not spaced for equal loading

(e) incorrect positioning of lifter on load

(f) lifting people

(g) lifting suspended loads over people

(h) leaving suspended loads unattended

(i) removing or obscuring warning labels

(j) operating without having read and understood the operating manual

(k) not staying clear of the suspended load

(l) operating lifter when rated load, lifter weight, or safety markings are missing

(m) lifting loads higher than necessary

(n) making alterations or modifications to lifter

(2) Where size or shape of lifter prohibits the inclusion of all or any such markings, a label shall be affixed, referring user to consult manufacturer's instruction manual for product safety information.

(3) If the vacuum lifting device has manual shutoff pads or groups of pads, the valves shall be marked to show operating position. Should this marking be some type of coding, then a label or tag shall be attached at or near the valve that explains such markings.

20-2.2.2 Construction

(a) Vacuum Pad Rating. The ultimate pad capacity (UPC) shall be determined by the following formulas:

(1) Inch–Pound Method

$$\text{UPC} = A(Hg/2)$$

where

A = effective area of the vacuum pad, expressed in square inches, enclosed between the pad and the material when the pad is fully compressed against the material surface to be lifted

Copyright ASME International
Provided by IHS under license with ASME
No reproduction or networking permitted without license from IHS Not for Resale

Hg = system vacuum expressed in inches of mercury. Reductions for altitude, efficiency, consistency, and wear of vacuum source shall be considered.
2 = division constant for inch–pound method

EXAMPLE:

Effective pad area = 100 in.^{2}
System vacuum = 24 in. Hg
UPC = 100(24/2) = 1,200 lb

(2) Metric Method

$$\text{UPC} = A(Hg/73.6)$$

where

A = effective area of the vacuum pad, expressed in square centimeters, enclosed between the pad and the material when the pad is fully compressed against the material surface to be lifted
Hg = system vacuum expressed in centimeters of mercury. Reductions for altitude, efficiency, consistency, and wear of vacuum source shall be considered.
73.6 = division constant for metric method

EXAMPLE:

Effective pad area = 100 cm^2
System vacuum = 10 cm Hg
UPC = 100(10/73.6) = 13.6 kg

(b) Electrical Equipment. External power supply, electrical equipment, and wiring for below-the-hook lifters shall comply with ANSI/NFPA 70.

(c) Horizontal Surface Lifts. The rated load shall not be greater than 50% of the UPC for horizontal surface lifts.

(d) Vertical Surface Lifts. The rated load shall not be greater than 25% of the UPC for vertical surface lifts.

(e) Load Type. These factors are for clean, flat, dry, nonporous loads, and shall be increased as required by the surface conditions of materials to be lifted.

(f) Vacuum Reserve System. The vacuum lifting device shall incorporate a vacuum reservoir of sufficient size to prevent the vacuum level under the pads from decreasing more than 10% in 4 min with power off on a clean, dry, and nonporous load. The vacuum lifting device shall be designed so that when in operation, all available vacuum reservoirs of the machine shall be channeled to the vacuum pads in use during a "vacuum-power-off" condition.

(g) Vacuum Lifter Structural Design. The load bearing structural components of a vacuum lifter shall be designed to withstand the stresses imposed by its rated load plus the weight of the lifter, with a minimum design factor of three, based on yield strength of the material, and with stress ranges that do not exceed the values given in ANSI/AWS D14.1 for the applicable conditions.

(h) Welding. All welding shall be in accordance with ANSI/AWS D14.1.

(i) Power Disconnects

(1) Hoisting equipment using an externally powered vacuum lifter shall have a separate vacuum lifter circuit switch of the enclosed type with provision for locking, flagging, or tagging in the open (off) position. The vacuum lifter disconnect switch shall be connected on the line side (power supply side) of the hoisting equipment disconnect switch.

(2) Disconnects are not required on externally powered vacuum lifters operating from a 120 V AC single-phase power source.

(j) Modifications. Vacuum lifters may be modified or rerated, provided such modifications are analyzed and approved by the equipment manufacturer or a qualified person. A rerated lifter or one whose components have been modified shall conform to this para. 20-2.2.2 and be tested according to para. 20-2.3.8. The new rated load shall be displayed in accordance with para. 20-2.2.1(a).

20-2.2.3 Installation

(a) The vacuum lifting device shall be assembled and installed in accordance with the manufacturer's instructions.

(b) The installer shall ensure that the power supply is the same as that shown on the nameplate.

(c) The electrical power supply to the vacuum lifter shall be connected to the line side of the crane disconnect or to an independent circuit.

(d) The installer shall check for correct rotation of all motors.

(e) Prior to initial use, the lifter shall be tested per para. 20-2.3.8.

(f) Operating instructions, maintenance, and parts information shall be furnished by the manufacturer.

(g) External power supply and electrical equipment for below-the-hook lifters shall comply with ANSI/NFPA 70.

SECTION 20-2.3: INSPECTION, TESTING, AND MAINTENANCE

20-2.3.1 Inspection Classification

(a) Initial Inspection

(1) New and reinstalled vacuum lifters shall be inspected by a designated person prior to initial use to verify compliance with applicable provisions of this volume.

(2) Altered, repaired, or modified vacuum lifters shall be inspected by a designated person. The inspection may be limited to the provisions affected by the alteration, repair, or modification, as determined by a qualified person.

(b) Inspection Intervals. Inspection procedure for vacuum lifting devices in regular service is divided into

Copyright ASME International
Provided by IHS under license with ASME
No reproduction or networking permitted without license from IHS
Not for Resale

three general classifications, based upon the intervals at which inspection should be performed. The intervals, in turn, are dependent upon the nature of the critical components of the vacuum lifting device and the degree of their exposure to wear, deterioration, or malfunction. The three general classifications are designated as *every lift*, *frequent*, and *periodic*, with respective intervals between inspections as defined below.

(1) Every Lift Inspection. Visual examination by the operator before and during each lift made by the vacuum lifting device.

(2) Frequent Inspection. Visual examinations by the operator or other designated persons with records not required.

(a) Normal service — monthly

(b) Heavy service — weekly to monthly

(c) Severe service — daily to weekly

(d) Special or infrequent service — as recommended by a qualified person before and after each occurrence

(3) Periodic Inspection. Visual inspection by a qualified person making records of apparent external conditions to provide the basis for a continuing evaluation. An external coded mark on the vacuum lifting device is an acceptable identification in lieu of records.

(a) Normal service for equipment in place — yearly

(b) Heavy service [as in (a) above, unless external conditions indicate that disassembly should be done to permit detailed inspection] — semiannually

(c) Severe service [as in (b) above] — quarterly

(d) Special or infrequent service — as recommended by a qualified person before the first occurrence and as directed by the qualified person for any subsequent occurrences

20-2.3.2 Every Lift Inspection

Items such as the following shall be inspected by the operator before and/or during every lift for any indication of damage as specifically indicated, including observations during operation for any damage that might occur during the lift:

(a) surface of the load for debris

(b) seal of the vacuum pad for debris

(c) condition and operation of the controls

(d) condition and operation of the indicators, meters, and pumps when installed

20-2.3.3 Frequent Inspection

Items such as the following shall be inspected for damage at intervals as defined in para. 20-2.3.1(b)(2), including observations during operation for any indications of damage that might appear between inspections. A qualified person shall determine whether any indications of damage constitute a hazard or will require more frequent inspection. For all vacuum lifters, inspect:

(a) structural members for deformation, cracks, and excessive wear on any part of the lifter.

(b) the vacuum generator for output.

(c) all vacuum pad seal rings for cuts, tears, excessive wear, and presence of foreign particles.

(d) all vacuum lines and vacuum line connections for leakage, cuts, kinks, and collapsed areas of hoses.

(e) the vacuum reservoir for leaks and visual damage.

(f) the entire vacuum system, including indicator lights, gages, horns, bells, pointers or other warning devices, and vacuum level indicators, by attaching a nonporous, clean surface to the vacuum pad or pads and then stopping the vacuum source. The vacuum level in the system shall not decrease by more than the manufacturer's specified rate.

20-2.3.4 Periodic Inspection

Complete inspections of the vacuum lifting device shall be performed at intervals as defined in para. 20-2.3.1(b)(3). Any deficiencies, such as listed below, shall be examined, and determination made as to whether they constitute a hazard. These inspections shall include the requirements of para. 20-2.3.3, and, in addition, items such as the following:

(a) external evidence of
- *(1)* looseness
- *(2)* wear
- *(3)* deformation
- *(4)* cracking
- *(5)* corrosion

(b) external evidence of damage to
- *(1)* supporting structure
- *(2)* motors
- *(3)* controls
- *(4)* other auxiliary components

(c) warning label required by para. 20-2.2.1(d)

20-2.3.5 Vacuum Lifters Not in Regular Use

A vacuum lifter that has been idle for a period of 1 month or more is to be given an inspection in accordance with para. 20-2.3.3 before being placed into service.

20-2.3.6 Inspection Records

Dated inspection reports shall be made on critical items such as those listed in para. 20-2.3.4. Records should be available to appointed personnel for each periodic inspection and when the vacuum lifter is either modified or repaired.

20-2.3.7 Repairs

Any indications of damage disclosed by the inspection requirements of Section 20-2.3 shall be corrected according to the procedures outlined in para. 20-2.3.9 before operation of the vacuum lifter is resumed.

Copyright ASME International
Provided by IHS under license with ASME
No reproduction or networking permitted without license from IHS
Not for Resale

20-2.3.8 Testing

(03) **20-2.3.8.1 Operational Tests**

(a) New and reinstalled lifting devices shall be tested by, or under the direction of, a qualified person prior to initial use to verify compliance with applicable provisions of this volume, including, but not limited to, the following:

(1) moving parts
(2) latches
(3) stops
(4) limit switches
(5) control devices
(6) vacuum pad seals
(7) vacuum lines

(b) Altered, repaired, or modified lifting devices shall be tested by, or under the direction of, a qualified person. This test may be limited to the provisions affected by the alteration, repair, or modification, as determined by a qualified person with guidance from the manufacturer.

(c) The seals and connections shall be tested for leaks by attaching a smooth, nonporous, clean material to the vacuum pad or pads and then stopping the vacuum source. Vacuum level in the system shall not decrease by more than the manufacturer's specified rate.

(d) All indicator lights, gages, horns, bells, pointers, and other warning devices and vacuum level indicators shall be tested by the same method as in para. 20-2.3.8.2 below.

(e) Dated reports of all operational tests shall be filed.

(03) **20-2.3.8.2 Load Test**

(a) Prior to initial use, all new, altered, repaired, or modified vacuum lifting devices shall be load tested and inspected by, or under the direction of, a qualified person. A written report shall be prepared by the qualified person and placed on file, confirming the load rating of the vacuum lifting device. The load rating should not be more than 80% of the maximum load sustained during the test. Test loads shall not be more than 125% of the rated load of the system, unless otherwise recommended by the manufacturer or a qualified person.

(b) Altered, repaired, or modified vacuum lifting devices shall be tested by, or under the direction of, a qualified person. This test may be limited to the provisions affected by the alteration, repair, or modification, as determined by a qualified person with guidance from the manufacturer.

(c) The load test shall consist of one of the following procedures:

(1) Actual Load Test

(a) Attach pads to the designated test load.

(b) Raise the test load a minimum distance to ensure the load is supported by the vacuum lifting device.

(c) Hold the load for 2 min.

(d) Lower the load for release.

(2) Simulated Load Test. Using a test fixture, apply forces to all load-bearing components, either individually or in assemblies, equivalent to the force encountered by the components if they were supporting a load that was 125% of the rated load.

(d) After the test, the vacuum lifting device shall be visually inspected. Any condition that constitutes a hazard shall be corrected before the lifting device is placed in service. If the correction affects the structure, then the lifter shall be retested.

20-2.3.9 Maintenance

(a) Maintenance Program. A maintenance program should be established, based on recommendations made by the vacuum lifting device manufacturer or a qualified person.

(b) Maintenance Procedure

(1) Before adjustments and repairs are started on a vacuum lifting device, the following precautions shall be taken.

(a) Locate the vacuum lifting device where it will cause the least interference with other operations in the area.

(b) All sources of power shall be disconnected, locked out, and tagged "Out of Service."

(2) Only qualified personnel shall perform adjustments and tests when required.

(a) Provisions should be made for qualified persons to work on energized equipment when adjustments and tests are required.

(b) Lubrication. All moving parts of the vacuum lifting device for which lubrication is specified should be regularly lubricated. The manufacturer's recommendations as to points and frequency of lubrication, maintenance of lubrication levels, and types of lubricant should be used.

(3) Replacement parts shall be at least equal to the original manufacturer's specifications.

(4) After adjustments and repairs have been made, the vacuum lifting device shall not be restored to service until it has been inspected according to para. 20-2.3.3.

(5) Dated records of repairs and replacements should be made.

(6) Adjustments and Repairs. Any hazardous conditions disclosed by the inspection requirements of para. 20-2.3.1 shall be corrected before normal operation of the vacuum lifting device is resumed. Adjustments and repairs shall be done under the direction of, or by, a qualified person.

(a) Adjustments shall be maintained to assure correct functioning of components.

(b) Repairs or replacements shall be made as needed.

Copyright ASME International
Provided by IHS under license with ASME
No reproduction or networking permitted without license from IHS
Not for Resale

SECTION 20-2.4: OPERATION

20-2.4.1 Operators

Below-the-hook lifting devices shall be operated only by trained, designated persons.

20-2.4.2 Qualifications

Qualifications for operators of below-the-hook lifting devices are as follows:

(a) The operator shall be instructed in the use of the device by a designated person. Instructions should include, but not be limited to, the following:

(1) application of the lifter to the load and adjustments, if any, that adapt the lifter to various sizes or kinds of loads

(2) instructions in any special operations or precautions

(3) the manufacturer's suggested operating procedures

(4) condition of the load required for operation of the lifter, such as, but not limited to, balance, surface cleanliness, flatness, bending, and load thickness

(5) storage of the lifter to protect it from damage

(6) not exceeding the rated load of the lifting device nor the capacity of the hoisting equipment by the combined weight of the load, the lifting device, and rigging

(7) charging of the battery (if required)

(8) the purpose of indicators, meters, or alarms on the vacuum lifter

(9) the proper attachment of adapters to lifting device for special load handling

(b) The operator shall demonstrate the ability to operate the lifter as instructed before assuming responsibility for using the lifter.

20-2.4.3 Conduct of Lifting Device Operators

(a) The operator shall give attention to the operation of the lifts during a lifting sequence.

(b) When physically or otherwise unfit, an operator shall not engage in the operation of the equipment.

(c) Operators shall be responsible for those operations under their direct control. Whenever there is any doubt as to safety, the operator shall consult with a designated person before handling the load.

(d) The operator shall respond only to instructions from designated persons. However, the operator shall obey a stop order at all times, no matter who gives it.

(e) The operation of the lifter shall be observed before use and during a shift. Any deficiency observed shall be carefully examined by a designated person. If the deficiency constitutes a hazard, the lifter shall be removed from service and tagged "Out of Service." Any indication of a hazardous condition shall be reported to a qualified person for evaluation.

(f) The operator shall be familiar with standard hand signals when applicable.

(g) The operator shall land any attached load and store the lifter before leaving the lifting device.

(h) All controls shall be tested by the operator before use during a shift. If any controls do not operate properly, they should be adjusted or repaired before operations are begun.

(i) The operator shall not ride, or allow others to ride, loads or the lifting device.

(j) The operator and other personnel shall stay clear of the load. Loads shall be guided by pushing or pulling at the edge in such a manner as to avoid endangering hands or other body parts as the load is lowered, or if it drops.

20-2.4.4 Lifting Device Operating Practices

(a) Lifting devices shall be operated only by the following qualified personnel:

(1) designated persons

(2) trainees under the direct supervision of a designated person

(3) maintenance and test personnel, when it is necessary in the performance of their duties

(4) inspectors (lifting devices)

(b) The lifting device shall not be loaded in excess of its rated load or handle any load for which it is not designed.

(c) The lifter shall be applied to the load in accordance with the instruction manual.

(d) Before lifting, the operator shall make sure that lifter ropes or chains are not kinked, and that multiple part lines are not twisted around each other.

(e) Care should be taken to make certain the load is correctly distributed for the lifter being used.

(f) The temperature of the load should not exceed the maximum allowable limits of the lifter.

(g) The lifter shall be brought over the load in such a manner as to minimize swinging.

(h) Care shall be taken that there is not sudden acceleration or deceleration of the load.

(i) Do not allow load or lifter to come into contact with any obstruction.

(j) The operator shall avoid carrying the load over people.

(k) The lifter shall not be used for side pulls or sliding the load unless specifically authorized by a qualified person.

(l) If power goes off while making a lift, the operator shall immediately warn all persons in the vicinity of the lifter and land the load if at all possible to do so.

(m) The vacuum lines shall be free from kinks and twists, and shall not be wrapped around or looped over portions of the lifter that will move during the lift.

(n) The pad contact surface shall be clean and free of loose particles.

(o) Before starting to lift, verify that the vacuum level indicator has reached the required level.

Copyright ASME International
Provided by IHS under license with ASME
No reproduction or networking permitted without license from IHS Not for Resale

(p) Before starting to lift, raise the load a few inches to establish that the vacuum lifting device has been correctly applied and that a stable vacuum level exists.

(q) The operator shall not leave suspended loads unattended.

20-2.4.5 Miscellaneous Operating Practices

(a) An operator shall not use a lifting device that is tagged "Out of Service" or otherwise designated as nonfunctioning.

(b) "Out of Service" tags on lifting devices shall not be removed without the approval of the person placing them or an authorized person.

(c) The lifter, when not in use, should be stored at an assigned location.

(d) Caution should be taken that operating markings or tags shall not be removed or defaced. Missing or illegible markings or tags shall be replaced.

SECTION 20-2.5: INSTRUCTION MANUALS

The manufacturer shall provide operating instructions, and maintenance and parts information.

Copyright ASME International
Provided by IHS under license with ASME
No reproduction or networking permitted without license from IHS
Not for Resale

Chapter 20-3
Close Proximity Operated Lifting Magnets

SECTION 20-3.1: SCOPE

Chapter 20-3 applies to the marking, construction, installation, inspection, testing, maintenance, and operation of all lifting magnets when used for single or multiple steel piece handling operations in which the operator of the lifting magnet is required to manually position the lifting magnet on the load and manually guide the load during its movement, or in remotely operated lifting magnets when operated in close proximity to people. For multi-magnet systems where individual lifting magnets are suspended from a spreader beam or its equivalent, this section applies only to the individual lifting magnet, excluding the spreader beam or its equivalent and the associated control equipment. This Chapter does not apply to remotely operated lifting magnets in areas where people are excluded during normal operation.

SECTION 20-3.2: MARKING, CONSTRUCTION, AND INSTALLATION

(03) 20-3.2.1 Marking

(a) Rated Load (Capacity)

(1) General Application Lifting Magnets. The rated load (capacity) of the lifting magnet shall be legibly marked on the lifting magnet or on a tag attached to it where it is visible. This rating shall refer to the instruction manual for information relating to decreases in rating due to the load surface condition, thickness, percentage of contact with the lifting magnet, temperature, metallurgical composition, and deflection.

(2) Specified Application Lifting Magnets. The rated load (capacity) of the lifting magnet shall be legibly marked on the lifting magnet or on a tag attached to it where it is visible. This rating shall refer to the specific loads for which this rating applies.

(b) Controls. The position of the control switch or handle of a lifting magnet shall be marked with "Lift," "Off," and "Drop," or equivalents to indicate the mode of operation of the lifting magnet.

(c) Identification. All new lifting magnets shall be marked with, but not limited to, the following information:

(1) manufacturer's name and address

(2) manufacturer's model or lifting magnet identification

(3) lifting magnet weight

(4) duty cycle (when applicable)

(5) the cold current (amps) at 68°F (20°C) (when applicable)

(6) the voltage of the primary power supply, or battery (when applicable)

(d) Repaired or Modified Lifting Magnets. All repaired or modified magnets shall be marked with identification displaying, but not limited to, the following information:

(1) name and address of the repairer or modifier

(2) repairer's or modifier's lifting magnet identification

(3) weight of lifting magnet, if altered

(4) duty cycle, if altered

(5) cold current or wattage at 68°F (20°C), if altered

(6) voltage of the primary power supply or battery, if altered

(7) rated load, if altered [as described in (a) above]

(e) Product Safety Labels

(1) Where size and shape of the lifting magnet allow, all lifting magnets shall have labels, affixed to them in a readable position, that include the appropriate signal word, according to ANSI Z535.4-1998 (4.13), to bring the label to the attention of the operator. The label should include cautionary language to provide danger, warning, or caution notice to operators and others against

(a) exceeding the rated load, or lifting loads not specified in the instruction manual

(b) operating a damaged or malfunctioning lifting magnet, or a lifting magnet with missing parts

(c) lifting people

(d) lifting suspended loads over people

(e) leaving suspended loads unattended

(f) removing or obscuring warning labels

(g) operating without having read and understood the operating manual

(h) not staying clear of the suspended load

(i) lifting loads higher than necessary

(j) making alterations or modifications to lifting magnet

(2) Where size or shape of lifting magnet prohibits the inclusion of all or any such markings, a label shall be affixed, referring user to consult manufacturer's instruction manual for product safety information.

(3) Labels on battery operated lifting magnets shall provide additional cautionary language about operating when the battery capacity is inadequate.

Copyright ASME International
Provided by IHS under license with ASME
No reproduction or networking permitted without license from IHS
Not for Resale

(4) Labels on externally powered electromagnets shall contain additional cautionary language against

(a) exceeding lifting magnet duty cycle

(b) disconnecting lifting magnet with power on

(5) Labels on electrically controlled permanent magnets shall contain additional cautionary language about operating if the internal control function indicator, where applicable, does not indicate a complete cycle.

(6) Labels on manually controlled permanent magnets shall contain additional precautionary language about operating with the control handle latch not fully in the "Lift" position.

20-3.2.2 Construction

(a) General

(1) Lifting magnet electrical components shall be guarded or located to minimize operator injury or the entry of foreign objects during normal operating conditions.

(2) The control handle of a manually controlled permanent magnet shall include a device that will hold the magnetic circuit in either the "Load" or "Release" position to prevent inadvertent changes.

(3) The load-bearing structural components of a lifting magnet shall be designed to withstand the stresses imposed by its rated load plus the weight of the lifting magnet, with a minimum design factor of three, based on yield strength of the material, and with stress ranges that do not exceed the values given in ANSI/AWS D14.1 for the applicable conditions.

(4) Welding. All welding shall be in accordance with ANSI/AWS D14.1.

(b) Electrical Equipment

(1) External power supply, electrical equipment, and wiring for electromagnets shall comply with ANSI/NFPA 70.

(2) Control circuit voltage of remote controls shall not exceed 150 V for AC or 300 V for DC.

(c) Lifting Magnet Controllers

(1) All lifting magnet controllers should have voltage and amperage indicated.

(2) Provisions shall be made for guarding the control switch in the "Lift" position to protect it from being inadvertently turned off, if this would result in release of the load.

(3) Battery operated electromagnets shall contain a device indicating existing battery conditions.

(d) Battery Enclosures for Battery Operated Lifting Magnets. Housing for wet cell batteries shall be vented to prevent accumulation of gases.

(e) Battery Backup Systems. Battery backup systems shall have an audible and visible signal to warn the operator when the primary power to the electromagnet is being supplied by the battery(ies).

(f) Power Disconnects

(1) Hoisting equipment using an externally powered electromagnet shall have a separate magnet circuit switch of the enclosed type with provision for locking, flagging, or tagging in the open (off) position. Means for discharging the inductive energy of the lifting magnet shall be provided. The lifting magnet disconnect switch shall be connected on the line side (power supply side) of the hoisting equipment disconnect switch.

(2) Power supplied to lifting magnets from DC generators can be disconnected by disabling the external powered source connected to the generator, or by providing a circuit switch that disconnects excitation power to the generator and removes all power to the lifting magnet.

(3) Disconnects are not required on externally powered electromagnets operating from a 120 V AC single-phase power source.

(g) Modifications. All lifting magnets may be modified or rerated, provided such modifications and the supporting structure are analyzed and approved by the lifting magnet manufacturer or a qualified person. A rerated lifting magnet or one whose load-supporting components have been modified shall conform to para. 20-3.2.2(a)(3) and be tested in accordance with para. 20-3.3.8. New rated load and application load shall be displayed in accordance with para. 20-3.2.1.

20-3.2.3 Installation

(a) The lifting magnet shall be installed in accordance with the manufacturer's instructions.

(b) Determine that the external power input is in accordance with paras. 20-3.2.2(b) and (f), is of the correct voltage and amperage, and that the power conductors and controls are of adequate rating, and insulated and protected against accidental interruption or damage.

SECTION 20-3.3: INSPECTION, TESTING, AND MAINTENANCE

20-3.3.1 Inspection Classification

(a) Initial Inspection

(1) New and reinstalled lifting magnets shall be inspected by a designated person prior to initial use to verify compliance with applicable provisions of this volume.

(2) Altered, repaired, or modified lifting magnets shall be inspected by a designated person. The inspection may be limited to the provisions affected by the alteration, repair, or modification, as determined by a qualified person.

(b) Inspection Intervals. Inspection procedures for lifting magnets in regular service are divided into three general classifications, based upon the intervals at which the inspections shall be performed. The intervals, in turn,

Copyright ASME International
Provided by IHS under license with ASME
No reproduction or networking permitted without license from IHS
Not for Resale

are dependent upon the nature of the critical components of the lifting magnet and the degree of their exposure to wear, deterioration, or malfunction. The three general classifications are designated as *every lift*, *frequent*, and *periodic*, with respective intervals between inspections as defined below.

(1) Every Lift Inspection. Visual examination by the operator before and during each lift made by the lifting magnet.

(2) Frequent Inspection. Visual examination by the operator or other designated persons with records not required.

(a) Normal service — monthly

(b) Heavy service — weekly to monthly

(c) Severe service — daily to weekly

(d) Special or infrequent service — as recommended by a qualified person before and after each occurrence

(3) Periodic Inspection. Visual inspection by a qualified person making records of apparent external conditions to provide the basis for a continuing evaluation.

(a) Normal service for equipment in place — yearly

(b) Heavy service for equipment in place — quarterly, unless external conditions indicate that disassembly should occur to permit detailed inspection

(c) Severe service [as in (b) above] — monthly

(d) Special or infrequent service — as recommended by a qualified person before the first occurrence and as directed by the qualified person for any subsequent occurrences

20-3.3.2 Every Lift Inspection

Items such as the following shall be inspected by the operator before and/or during every lift for any indication of damage as specifically indicated, including observations during operation for any damage that might occur during the lift:

(a) lifting magnet face and surface of the load for foreign materials and smoothness

(b) condition and operation of the control handle of a manually controlled permanent magnet

(c) condition and operation of indicators and meters when installed

20-3.3.3 Frequent Inspection

Items such as the following shall be inspected for damage at intervals as defined in para. 20-3.3.1(b)(2), including observations during operation for any indications of damage that might appear between inspections. A qualified person shall determine whether any indications of damage constitute a hazard or will require more frequent inspection. For all lifting magnets, inspect:

(a) structural and suspension members for deformation, cracks, or excessive wear on any part of the lifting magnet

(b) lifting magnet face for foreign materials and smoothness

(c) condition of lifting bail or sling suspension

(d) condition and operation of control handle

(e) condition and operation of indicators and meters, where applicable

(f) for all lifting magnets, except manually controlled permanent magnets, inspect all electrical conductors that are visible without disassembly for loose connections, continuity, corrosion, and damage to insulation

(g) for battery operated electromagnets, inspect for proper level of battery electrolyte and for corrosion of either the battery posts or connectors

(h) cracked housings, welds, and loose bolts

(i) labels and markings

20-3.3.4 Periodic Inspection

Complete inspections of lifting magnets shall be performed and recorded at intervals as defined in para. 20-3.3.1(b)(3). Any deficiencies, such as those listed below, shall be examined by a qualified person and determination made as to whether they constitute a hazard. These inspections shall include the requirements of para. 20-3.3.3 and, in addition, items such as the following:

(a) All members, fasteners, locks, switches, warning labels, and lifting parts shall be inspected for deformation, wear, and corrosion.

(b) All electrical components described in paras. 20-3.2.2(b) through (f), including meters, indicators, or alarms, shall be tested for proper operation and condition.

(c) The lifting magnet coil shall be tested for ohmic and ground readings and compared to manufacturer's standards.

20-3.3.5 Lifting Magnets Not in Regular Use

A lifting magnet that has been idle for a period of 1 month or more is to be given an inspection in accordance with para. 20-3.3.3 before being placed into service.

20-3.3.6 Inspection Records

Dated inspection reports shall be made on critical items, such as those listed in para. 20-3.3.4. Records should be available to appointed personnel for each periodic inspection and when the lifting magnet is either modified or repaired.

20-3.3.7 Repairs

Any indications of damage disclosed by the inspection requirements of Section 20-3.3 shall be corrected according to the procedures outlined in para. 20-3.3.9 before operation of the lifting magnet is resumed.

20-3.3.8 Testing

20-3.3.8.1 Operational Tests

(a) New and reinstalled lifting magnets shall be tested by a qualified person, or a designated person under the

Copyright ASME International
Provided by IHS under license with ASME
No reproduction or networking permitted without license from IHS Not for Resale

direction of a qualified person, prior to initial use to verify compliance with applicable provisions of this volume, including, but not limited to, the following:

(1) moving parts
(2) latches
(3) stops
(4) switches
(5) any control devices
(6) alarms

(b) Altered, repaired, or modified lifting magnets shall be tested by, or under the direction of, a qualified person. The test may be limited to the provisions affected by the alteration, repair, or modification, as determined by a qualified person with guidance from the manufacturer.

(c) All indicator lights, gages, horns, bells, alarms, pointers, and other warning devices shall be tested.

(d) Dated reports of all operational tests shall be filed.

(03) **20-3.3.8.2 Load Test**

(a) Prior to initial use, all new, modified, or repaired lifting magnets shall be tested by a qualified person and a record be furnished confirming the load rating of the lifting magnet.

(1) General application lifting magnets shall be required to satisfy the rated breakaway force test. The rated load of the lifting magnet shall be less than 50% of the rated breakaway force measured in this test.

(2) Special application lifting magnets shall be required to comply with the application breakaway force test. The specified application load shall be less than 50% of the application breakaway force measured in this test.

(b) The breakaway force test shall establish the force required to vertically remove the lifting magnet from a low carbon, rolled steel plate of the minimum thickness stated by the lifting magnet manufacturer. The portion of this plate that is in contact with the lifting magnet shall not exceed 125 μin. (3.2×10^{-3} mm) and be flat within 0.002 in./ft (0.05 mm/m), without exceeding 0.005 in. (0.127 mm) total. The full operating face of the lifting magnet shall be in contact with the steel plate, which shall be between 60°F (15°C) and 120°F (50°C). Battery operated electromagnets and externally powered electromagnets shall be operated at the manufacturer's recommended voltage and current levels.

(c) The application breakaway force test shall establish the application breakaway forces of the lifting magnet under the variety of loading conditions for which the lifting magnet is specified. The details of this test should be supplied by the manufacturer of the lifting magnet.

(d) Altered, repaired, or modified lifting magnets shall be tested by, or under the direction of, a qualified person. This test may be limited to the provisions affected by the alteration, repair, or modification, as determined by a qualified person with guidance from the manufacturer.

20-3.3.9 Maintenance

(a) Maintenance Program. A maintenance program should be established, based on recommendations made by the lifting magnet manufacturer or a qualified person.

(b) Maintenance Procedure

(1) Before adjustment and repairs are started on a lifting magnet or its controls, the following precautions shall be taken.

(a) All sources of lifting magnet power shall be disconnected and locked out, and tagged "Out of Service."

(b) A lifting magnet removed for repair shall be tagged "Out of Service."

(2) Only qualified personnel shall work on equipment when adjustments and tests are required.

(3) Replacement parts shall be at least equal to the original manufacturer's specifications.

(4) After adjustments and repairs have been made, the lifting magnet shall not be returned to service until it has been inspected according to para. 20-3.3.4(c).

(5) Dated records of repairs and replacements should be made available.

(6) Adjustments and Repairs. Any hazardous conditions disclosed by the inspection requirements of para. 20-3.3.1 shall be corrected before normal operation of the lifting magnet is resumed. Adjustments and repairs shall be done under the direction of, or by, a qualified person.

SECTION 20-3.4: OPERATION

20-3.4.1 Operators

Below-the-hook lifting devices shall be operated only by a trained, designated person.

20-3.4.2 Qualifications

Qualifications for operators of below-the-hook lifting devices are as follows:

(a) The operator shall be instructed in the use of the device by a designated person. Instructions should include, but not be limited to, the following:

(1) application of the lifter to the load and adjustments, if any, that adapt the lifter to various sizes or kinds of loads

(2) instructions in any special operations or precautions

(3) the manufacturer's suggested operating procedures

(4) condition of the load required for operation of the lifter, such as, but not limited to, balance, surface cleanliness, flatness, bending, and load thickness

(5) storage of the lifter to protect it from damage

Copyright ASME International
Provided by IHS under license with ASME
No reproduction or networking permitted without license from IHS
Not for Resale

(6) not exceeding the rated load of the lifting device nor the capacity of the hoisting equipment by the combined weight of the load, the lifting device, and rigging

(7) charging of the lifting magnet battery (if required)

(8) the purpose of indicators, meters, or alarms on the lifting magnet

(9) the proper attachment of adapters to lifting device for special load handling

(b) The operator shall demonstrate the ability to operate the lifter as instructed before assuming responsibility for using the lifter.

20-3.4.3 Conduct of Lifting Device Operators

(a) The operator shall give attention to the operation of the lifts during a lifting sequence.

(b) When physically or otherwise unfit, an operator shall not engage in the operation of the equipment.

(c) Operators shall be responsible for those operations under their direct control. Whenever there is any doubt as to safety, the operator shall consult with the designated person before handling the load.

(d) The operator shall respond only to instructions from designated persons. However, the operator shall obey a stop order at all times, no matter who gives it.

(e) The operation of the lifter shall be observed before use and during a shift. Any deficiency observed shall be carefully examined by a designated person. If the deficiency constitutes a hazard, the lifter shall be removed from service and tagged "Out of Service." Any indication of a hazardous condition shall be reported to a qualified person for evaluation.

(f) The operator shall be familiar with standard hand signals when applicable.

(g) The operator shall land any attached load and store the lifter before leaving the lifting device.

(h) All controls shall be tested by the operator before use during a shift. If any controls do not operate properly, they should be adjusted or repaired before operations are begun.

(i) The operator shall not ride, or allow others to ride, loads or the lifting magnet.

(j) The operator and other personnel shall stay clear of the load. Loads shall be guided by pushing or pulling at the edge in such a manner as to avoid endangering hands or other body parts as the load is lowered, or if it drops.

20-3.4.4 Lifting Device Operating Practices

(a) Lifting devices shall be operated only by the following qualified personnel:

(1) designated persons

(2) trainees under the direct supervision of a designated person

(3) maintenance and test personnel, when it is necessary in the performance of their duties

(4) inspectors (lifting devices)

(b) The lifting device shall not be loaded in excess of its rated load or handle any load for which it is not designed.

(c) The lifter shall be applied to the load in accordance with the instruction manual.

(d) Before lifting, the operator shall make sure that lifter ropes or chains are not kinked and that multiple part lines are not twisted around each other.

(e) Care should be taken to make certain the load is correctly distributed for the lifter being used.

(f) The temperature of the load should not exceed the maximum allowable limits of the lifter.

(g) The lifter shall be brought over the load in such a manner as to minimize swinging.

(h) Care shall be taken that there is not sudden acceleration or deceleration of the load.

(i) Do not allow load or lifter to come into contact with any obstruction.

(j) The operator shall avoid carrying the load over people.

(k) The lifter shall not be used for side pulls or sliding the load unless specifically authorized by a qualified person.

(l) The lifting magnet face and the lifting magnet contact area on the load shall be clean.

(m) The load to be lifted shall be within the lifting magnet's rated load (capacity) or application load (capacity) and lifting equipment rated load (capacity).

(n) The operator shall observe all meters and indicators on the lifting magnet to confirm proper operation prior to making a lift.

(o) Before starting the lift, the operator shall lift the load a few inches to establish that the load is securely attached to the lifting magnet.

(p) All Magnets. Before raising the load more than 2 in. (50 mm), any adjustable input control should be switched to the "full power" or "full on" position and remain in this position until the load is removed from the lifting magnet.

(q) Battery Operated Electromagnets

(1) Before lifting, the operator should confirm that the device indicating correct current flow remains stable for a minimum of 5 sec.

(2) For a lift of extended duration, the operator should observe the device indicating existing battery conditions every 5 min.

(3) The operator should open the ventilation lid before charging the battery.

(r) Electrically Controlled Permanent Magnets. Before lifting, the operator should check the internal control function indicator, where applicable, to confirm proper operation of the lifting magnet.

(s) Manually Controlled Permanent Magnets. Before lifting, the operator should confirm that the control handle

Copyright ASME International
Provided by IHS under license with ASME
No reproduction or networking permitted without license from IHS Not for Resale

is in the "lift" or "on" position and the control handle latch is operating.

(t) Battery Charging of Battery Operated Electromagnets or Battery Backup Systems

(1) Vented wet cell batteries shall be recharged at the first indication of current flow or voltage below the manufacturer's recommended range.

(2) Vented wet cell batteries shall be charged

(a) in a well-ventilated area to avoid accumulation of combustible gases

(b) where personnel are least likely to be exposed to vented fumes or electrolyte spillage

(3) All batteries shall be charged prior to being returned to service according to the recommendations supplied by the lifting magnet manufacturer.

(4) Eye, hand, and body protection shall be worn while servicing batteries.

(u) The operator shall not leave any lifted load unattended.

(v) Before lifting, the operator shall warn people near the lift.

(w) The operator should not reenergize the lifting magnet until it has been placed in contact with the next load to be lifted. Prematurely energizing the lifting magnet could cause unwanted materials to be attracted to the lifting magnet.

(x) The operator shall not leave suspended loads unattended.

20-3.4.5 Miscellaneous Operating Practices

(a) An operator shall not use a lifting device that is tagged "Out of Service" or otherwise designated as nonfunctioning.

(b) "Out of Service" tags on lifting devices shall not be removed without the approval of the person placing them or an authorized person.

(c) The lifter, when not in use, should be stored at an assigned location.

(d) Caution should be taken that operating markings or tags shall not be removed or defaced. Missing or illegible markings or tags shall be replaced.

SECTION 20-3.5: INSTRUCTION MANUALS

The manufacturer shall provide operating instructions, and maintenance and parts information. In addition to operating and preventive maintenance instructions, the manual shall provide a statement of those factors that alter the magnet's lifting capacity and the degree to which it is affected. Some of these factors are noted below.

(a) Load Thickness. The magnetic flux flowing from a lifting magnet into a load increases as the thickness of the load increases. Consequently, as a lifting magnet's lifting capacity is a function of this flux, the lift capacity increases with load thickness. For every lifting magnet, there is a critical load thickness where all of the lifting magnet's available flux flows into the load and the lift capacity reaches maximum.

(b) Load Alloy. Many alloys of iron do not accept magnetic flux as easily as do low carbon steels. Consequently, loads of such alloys will not accept all of the flux available in the lifting magnet, which reduces the lifting magnet's lift capacity.

(c) Load Surface Conditions. Anything that creates an air gap or nonmagnetic separation between a lifting magnet and the load reduces the flux flowing from the lifting magnet into the load, which reduces the lifting capacity of a lifting magnet. A rough surface finish, paper, dirt, rust, paint, and scale produce such gaps.

(d) Load Length or Width. As the length or width of the load increases, the load begins to deflect and to peel at the lifting magnet face. This may create an air gap between the load and the lifting magnet, which reduces the lifting capacity per (c) above.

(e) Attitude of Load. As the attitude of the surface of the load to which a lifting magnet is attached (lifting surface) changes from horizontal to vertical, the lifting capacity of the lifting magnet reaches a minimum and becomes dependent upon the coefficient of friction of the lifting surface.

(f) Portion of Lifting Magnet Face in Contact With Load. The full face of the lifting magnet must contact the load if the lifting magnet is to achieve maximum capabilities.

(g) Load Temperature. The temperature of the load can cause damage to the lifting magnet and, if high enough, even change the magnetic characteristics of the load. Consequently, the manual shall contain the manufacturer's recommendations pertaining to operation of the lifting magnet on loads at temperatures exceeding normal ambient temperatures.

Copyright ASME International
Provided by IHS under license with ASME
No reproduction or networking permitted without license from IHS
Not for Resale

Chapter 20-4
Remotely Operated Lifting Magnets

SECTION 20-4.1: SCOPE

Chapter 20-4 applies to the marking, construction, installation, inspection, testing, maintenance, and operation of remotely operated lifting magnets. This Chapter applies to remotely operated lifting magnets in areas where people are excluded during normal operation. This Chapter does not apply to close proximity operated magnets.

SECTION 20-4.2: MARKING, CONSTRUCTION, AND INSTALLATION

(03) 20-4.2.1 Marking

(a) Identification. All new lifting magnets shall be marked with identification displaying, but not limited to, the following information:

(1) manufacturer's name and address

(2) manufacturer's model or lifting magnet identification

(3) lifting magnet weight

(4) duty cycle

(5) cold current (amps) at 68°F (20°C) (when applicable)

(6) voltage of the primary power supply, or battery (when applicable)

(b) Repaired or Modified Lifting Magnets. All repaired or modified lifting magnets shall be marked with identification displaying, but not limited to, the following information:

(1) name and address of the repairer or modifier

(2) repairer's or modifier's lifting magnet identification

(3) weight of lifting magnet (if altered)

(4) duty cycle (if altered)

(5) cold current or wattage at 68°F (20°C) (if altered)

(6) voltage of the primary power supply or battery (if altered)

20-4.2.2 Construction

(a) General

(1) Lifting magnet electrical components shall be guarded or located to minimize operator injury or the entry of foreign objects during normal operating conditions.

(2) Lifting magnets should be weather resistant.

(3) Lifting magnet suspension devices should meet the lifting magnet manufacturer's recommendations.

(4) The load-bearing structural components of a lifting magnet shall be designed to withstand the stresses imposed by its rated load plus the weight of the lifting magnet, with a minimum design factor of three, based on yield strength of the material, and with stress ranges that do not exceed the values given in ANSI/AWS D14.1 for the applicable conditions.

(5) Welding. All welding shall be in accordance with ANSI/AWS D14.1.

(b) Electrical Equipment

(1) External power supply, electrical equipment, and wiring for electromagnets shall comply with ANSI/NFPA 70.

(2) The control circuit voltage of remote controls shall not exceed 150 V for AC or 300 V for DC.

(3) Indication or signal lights should be provided to indicate power is "on" or "off." If used, the lights shall be located so that they are visible by the operator and from the floor. Multiple bulbs may be used to avoid confusion due to a burned-out bulb.

(c) Lifting Magnet Controllers

(1) All lifting magnet controllers should have the voltage and amperage indicated.

(2) If the crane is remote controlled, loss of the radio control signal shall not result in deenergizing the lifting magnet.

(d) Power Disconnects

(1) Hoisting equipment using an externally powered electromagnet shall have a separate magnet circuit switch of the enclosed type, with provision for locking, flagging, or tagging in the open (off) position. Means for discharging the inductive energy of the lifting magnet shall be provided. The lifting magnet disconnect switch shall be connected on the line side (power supply side) of the hoisting equipment disconnect switch.

(2) Power supplied to lifting magnets from DC generators can be disconnected by disabling the external powered source connected to the generator, or by providing a circuit switch that disconnects excitation power to the generator and removes all power to the lifting magnet.

(3) Disconnects are not required on externally powered electromagnets operating from a 120 V AC single-phase power source.

(e) Modifications. All lifting magnets may be modified or rerated, provided such modifications and the supporting structure are analyzed and approved by the lifting magnet manufacturer or a qualified person. A

Copyright ASME International
Provided by IHS under license with ASME
No reproduction or networking permitted without license from IHS Not for Resale

rerated lifting magnet or one whose load-bearing structural components have been modified shall conform to para. 20-4.2.2(a)(4) and be tested in accordance with para. 20-4.3.7.

20-4.2.3 Installation

(a) The lifting magnet shall be installed in accordance with the manufacturer's instructions.

(b) Determine that the external power input is in accordance with paras. 20-4.2.2(b) and (d), is of the correct voltage and amperage, and that the power conductors and controls are of adequate rating, and insulated and protected against accidental interruption or damage.

SECTION 20-4.3: INSPECTION, TESTING, AND MAINTENANCE

20-4.3.1 Inspection Classification

(a) Initial Inspection

(1) New and reinstalled lifting magnets shall be inspected by a designated person prior to initial use to verify compliance with applicable provisions of this volume.

(2) Altered, repaired, or modified lifting magnets shall be inspected by a designated person. The inspection may be limited to the provisions affected by the alteration, repair, or modification, as determined by a qualified person.

(b) Inspection Intervals. Inspection procedures for lifting magnets in regular service are divided into two general classifications, based upon the intervals at which the inspections shall be performed. The intervals, in turn, are dependent upon the nature of the critical components of the lifting magnet and the degree of their exposure to wear, deterioration, or malfunction. The two general classifications are designated as *frequent* and *periodic,* with respective intervals between inspections as defined below.

(1) Frequent Inspection. Visual examination by the operator or other designated persons with records not required.

(a) Normal service — monthly

(b) Heavy service — weekly to monthly

(c) Severe service — daily to weekly

(d) Special or infrequent service — as recommended by a qualified person before and after each occurrence

(2) Periodic Inspection. Visual inspection by a qualified person making records of apparent external conditions to provide the basis for a continuing evaluation.

(a) Normal service for equipment in place — yearly

(b) Heavy service for equipment in place — quarterly, unless external conditions indicate that disassembly should occur to permit detailed inspection

(c) Severe service [as in (b) above] — monthly

(d) Special or infrequent service — as recommended by a qualified person before the first occurrence and as directed by the qualified person for any subsequent occurrences

20-4.3.2 Frequent Inspection

Items such as the following shall be inspected for damage at intervals as defined in para. 20-4.3.1(b)(1), including observations during operation for any indications of damage that might appear between inspections. A qualified person shall determine whether any indications of damage constitute a hazard or will require more frequent inspection. For all lifting magnets, inspect:

(a) structural and suspension members for deformation, cracks, or excessive wear on any part of the lifting magnet

(b) lifting magnet face for foreign materials and smoothness, if applicable

(c) all electrical conductors that are visible without disassembly

(d) cracked housings, welds, and loose bolts

20-4.3.3 Periodic Inspection

Complete inspections of lifting magnets shall be performed and recorded at intervals as defined in para. 20-4.3.1(b)(2). Any deficiencies, such as those listed below, shall be examined by a qualified person and determination made as to whether they constitute a hazard. These inspections shall include the requirements of para. 20-4.3.2 and, in addition, items such as the following:

(a) All members, fasteners, and lifting parts shall be inspected for deformation, wear, and corrosion.

(b) All electrical components described in para. 20-4.2.2, including meters, indicators, or alarms, shall be tested for proper operation and condition.

(c) The lifting magnet coil shall be tested for ohmic and ground readings, and compared to manufacturer's standards.

20-4.3.4 Lifting Magnets Not in Regular Use

A lifting magnet that has been idle for a period of 1 month or more shall be given an inspection in accordance with para. 20-4.3.2 before being placed into service.

20-4.3.5 Inspection Records

Dated inspection reports shall be made on critical items, such as those listed in para. 20-4.3.3. Records should be available to appointed personnel for each periodic inspection and when the lifting magnet is either modified or repaired.

20-4.3.6 Repairs

Any indications of damage disclosed by the inspection requirements of Section 20-4.3 shall be corrected

Copyright ASME International
Provided by IHS under license with ASME
No reproduction or networking permitted without license from IHS
Not for Resale

according to the procedures outlined in para. 20-4.3.8 before operation of the lifting magnet is resumed.

(03) **20-4.3.7 Testing**

(a) New and reinstalled lifting magnets shall be tested by, or under the direction of, a qualified person prior to initial use, to verify compliance with applicable provisions of this volume, including, but not limited to, the following:

(1) a visual inspection to verify that the lifting magnet contains no visible indications of hazardous conditions

(2) a check for proper operation of all electrical equipment contained in para. 20-4.2.2

(b) Altered, repaired, or modified lifting magnets shall be tested by, or under the direction of, a qualified person. This test may be limited to the provisions affected by the alteration, repair, or modification, as determined by a qualified person with guidance from the manufacturer.

(c) All indicator lights, gages, horns, bells, alarms, pointers, and other warning devices shall be tested.

(d) Dated reports of all operational tests shall be filed.

20-4.3.8 Maintenance

(a) Maintenance Program. A maintenance program should be established and be based on recommendations made by the lifting magnet manufacturer or a qualified person.

(b) Maintenance Procedure

(1) Before adjustments and repairs are started on a lifting magnet or its controls, the following precautions shall be taken.

(a) All sources of lifting magnet power shall be disconnected, locked out, and tagged "Out of Service."

(b) A lifting magnet removed from service for repair shall be tagged "Out of Service."

(2) Only qualified personnel shall work on equipment when maintenance and tests are required.

(3) Replacement parts shall be at least equal to the original manufacturer's specifications.

(4) After adjustments and repairs have been made, the lifting magnet shall not be returned to service until it has been inspected according to para. 20-4.3.1(c).

(5) Dated records of repairs should be made.

(6) Adjustments and Repairs. Any hazardous condition disclosed by the inspection requirements of para. 20-4.3.1 shall be corrected before normal operation of the lifting magnet is resumed. Adjustments and repairs shall be done under the direction of, or by, a qualified person.

SECTION 20-4.4: OPERATION

20-4.4.1 Operators

Below-the-hook lifting devices shall be operated only by trained, designated persons.

20-4.4.2 Qualifications

Qualifications for operators of below-the-hook lifting devices are as follows:

(a) The operator shall be instructed in the use of the device by a designated person. Instructions should include, but not be limited to, the following:

(1) application of the lifter to the load and adjustments, if any, that adapt the lifter to various sizes or kinds of loads

(2) instructions in any special operations or precautions

(3) the manufacturer's suggested operating procedures

(4) condition of the load required for operation of the lifter, such as, but not limited to, balance, surface cleanliness, flatness, bending, and load thickness

(5) storage of the lifter to protect it from damage

(6) not exceeding the rated load of the lifting device nor the capacity of the hoisting equipment by the combined weight of the load, the lifting device, and rigging

(7) charging of the lifting magnet battery (if required)

(8) the purpose of indicators, meters, or alarms on the lifting magnet

(9) the proper attachment of adapters to lifting device for special load handling

(b) The operator shall demonstrate the ability to operate the lifter as instructed before assuming responsibility for using the lifter.

20-4.4.3 Conduct of Lifting Device Operators

(a) The operator shall give attention to the operation of the lifts during a lifting sequence.

(b) When physically or otherwise unfit, an operator shall not engage in the operation of the equipment.

(c) Operators shall be responsible for those operations under their direct control. Whenever there is any doubt as to safety, the operator shall consult with the designated person before handling the load.

(d) The operator shall respond only to instructions from designated persons. However, the operator shall obey a stop order at all times, no matter who gives it.

(e) The operation of the lifter shall be observed before use and during a shift. Any deficiency observed shall be carefully examined by a designated person. If the deficiency constitutes a hazard, the lifter shall be removed from service and tagged "Out of Service." Any indication of a hazardous condition shall be reported to a qualified person for evaluation.

(f) The operator shall be familiar with standard hand signals when applicable.

(g) The operator shall land any attached load and store the lifter before leaving the lifting device.

Copyright ASME International
Provided by IHS under license with ASME
No reproduction or networking permitted without license from IHS Not for Resale

(h) All controls shall be tested by the operator before use during a shift. If any controls do not operate properly, they should be adjusted or repaired before operations are begun.

(i) The operator shall not ride, or allow others to ride, loads or the lifting magnet.

(j) The operator and other personnel shall stay clear of the load.

20-4.4.4 Lifting Device Operating Practices

(a) Lifting devices shall be operated only by the following qualified personnel:

(1) designated persons

(2) trainees under the direct supervision of a designated person

(3) maintenance and test personnel, when it is necessary in the performance of their duties

(4) inspectors (lifting devices)

(b) The lifting device shall not be loaded in excess of its rated load or handle any load for which it is not designed.

(c) The lifter shall be applied to the load in accordance with the instruction manual.

(d) Before lifting, the operator shall make sure that lifter ropes or chains are not kinked and that multiple part lines are not twisted around each other.

(e) Care should be taken to make certain the load is correctly distributed for the lifter being used.

(f) The temperature of the load should not exceed the maximum allowable limits of the lifter.

(g) The lifter shall be brought over the load in such a manner as to minimize swinging.

(h) Care shall be taken that there is not sudden acceleration or deceleration of the load.

(i) Do not allow load or lifter to come into contact with any obstruction.

(j) The operator shall avoid carrying the load over people.

(k) The lifter shall not be used for side pulls or sliding the load unless specifically authorized by a qualified person.

(l) The operator shall not leave suspended loads unattended.

20-4.4.5 Miscellaneous Operating Practices

(a) An operator shall not use a lifting device that is tagged "Out of Service" or otherwise designated as nonfunctioning.

(b) "Out of Service" tags on lifting devices shall not be removed without the approval of the person placing them or an authorized person.

(c) The lifter, when not in use, should be stored at an assigned location.

(d) Caution should be taken that operating markings or tags shall not be removed or defaced. Missing or illegible markings or tags shall be replaced.

SECTION 20-4.5: INSTRUCTION MANUALS

The manufacturer shall provide operating instructions, and maintenance and parts information. In addition to operating and preventive maintenance instructions, the manual shall provide a statement of those factors that alter the lifting magnet's lifting capacity and the degree to which it is affected.

Copyright ASME International
Provided by IHS under license with ASME
No reproduction or networking permitted without license from IHS Not for Resale

Chapter 20-5
Scrap and Material-Handling Grapples

SECTION 20-5.1: SCOPE

Chapter 20-5 applies to the marking, construction, installation, inspection, testing, maintenance, and operation of hydraulically operated scrap and material-handling grapples.

SECTION 20-5.2: MARKING, CONSTRUCTION, AND INSTALLATION

(03) 20-5.2.1 Marking

(a) Identification. All new grapples shall be marked with identification displaying, but not limited to, the following information:

(1) manufacturer's name and address

(2) manufacturer's serial number or grapple identification number

(3) grapple weight

(4) operating hydraulic pressure(s) (when applicable)

(5) the cold current (amps) at 68°F (20°C) (when applicable)

(6) rated voltage (when applicable)

(7) rated capacity (when applicable)

(b) Repaired or Modified Grapples. All repaired or modified grapples shall be marked with identification displaying, but not limited to, the following information:

(1) name and address of the repairer or modifier

(2) repairer's or modifier's grapple identification number

(3) grapple weight, if altered

(4) operating hydraulic pressure(s), if altered

(5) the cold current (amps) at 68°F (20°C), if altered

(6) rated voltage, if altered

(7) rated capacity (if altered)

20-5.2.2 Construction

(a) General. The load-bearing structural components of a grapple shall be designed to withstand the stresses imposed by the weight of its rated capacity plus the weight of the grapple, with a minimum design factor of three, based on the yield strength of the material, and with stress ranges that do not exceed the values given in ANSI/AWS D14.1 for the applicable conditions.

(b) Welding. All welding shall be in accordance with ANSI/AWS D14.1.

(c) Electrical Equipment. Electrical equipment and wiring shall comply with ANSI/NFPA 70.

(d) Grapple Magnets. Lifting magnet construction shall comply with para. 20-4.2.2.

(e) Modifications. Grapples may be modified or rerated, provided such modifications are analyzed and approved by the equipment manufacturer or a qualified person. A rerated grapple or one whose components have been modified shall be tested according to para. 20-5.3.7. New rated capacity shall be displayed in accordance with para. 20-5.2.1(b).

20-5.2.3 Installation

(a) The grapple shall be installed in accordance with the manufacturer's instructions.

(b) The user shall confirm that the hydraulic flows and pressures are the same as indicated on the grapple nameplate.

(c) Determine that the external power input is in accordance with para. 20-4.2.2(b), and is of the correct voltage and amperage.

(d) Confirm that the electrical power conductors and controls are of adequate rating, and insulated and protected against inadvertent interruption or damage.

SECTION 20-5.3: INSPECTION, TESTING, AND MAINTENANCE

20-5.3.1 Inspection Classification

(a) Initial Inspection

(1) New and reinstalled grapples shall be inspected by a designated person prior to initial use to verify compliance with applicable provisions of this volume.

(2) Altered, repaired, or modified grapples shall be inspected by a designated person. The inspection may be limited to the provisions affected by the alteration, repair, or modification, as determined by a qualified person.

(b) Inspection Intervals. Inspection procedures for grapples in regular service are divided into two general classifications, based upon the intervals at which the inspections shall be performed. The intervals, in turn, are dependent upon the nature of the critical components of the grapple and the degree of their exposure to wear, deterioration, or malfunction. The two general classifications are designated as *frequent* and *periodic,* with respective intervals between inspections as defined below.

Copyright ASME International
Provided by IHS under license with ASME
No reproduction or networking permitted without license from IHS Not for Resale

(1) Frequent Inspection. Visual examination by the operator or other designated persons with records not required.

(a) Normal service — monthly

(b) Heavy service — weekly to monthly

(c) Severe service — daily to weekly

(d) Special or infrequent service — as recommended by a qualified person before and after each occurrence

(2) Periodic Inspection. Visual inspection by a qualified person making records of apparent external conditions to provide the basis for a continuing evaluation.

(a) Normal service for equipment in place — yearly

(b) Heavy service for equipment in place — quarterly, unless external conditions indicate that disassembly should be done to permit detailed inspection

(c) Severe service for equipment in place — monthly, unless external conditions indicate that disassembly should be done to permit detailed inspection

(d) Special or infrequent service — as recommended by a qualified person before the first occurrence and as directed by the qualified person for any subsequent occurrences

20-5.3.2 Frequent Inspection

Items such as the following shall be inspected for damage at intervals as defined in para. 20-5.3.1(b)(1), including observations during operation for any indications of damage that might appear between inspections. A qualified person shall determine whether any indications of damage constitute a hazard or will require more frequent inspection. For all grapples, inspect

(a) structural members for deformation, cracks, or excessive wear on any part of the grapple

(b) pins and bushings

(c) hydraulic lines

(d) hydraulic cylinders

(e) loose bolts

(f) for combination magnet/grapples, inspect the lifting magnet per para. 20-4.3.2

(g) for electrohydraulic grapples, inspect all electrical conductors that are visible without disassembly

20-5.3.3 Periodic Inspection

Complete inspections of grapples shall be performed and recorded at intervals as defined in para. 20-5.3.1(b)(2). Any deficiencies, such as those listed below, shall be examined by a qualified person and determination made as to whether they constitute a hazard. These inspections shall include the requirements of para. 20-5.3.2 and, in addition, items such as the following:

(a) all members, fasteners, and lifting parts shall be inspected for deformation, wear, and corrosion

(b) hydraulic hose, fittings, and tubing inspection:

(1) evidence of leakage at the surface of flexible hose or its junction with metal couplings

(2) blistering or abnormal deformation of the outer covering of the hydraulic hose

(3) leakage at threaded or clamped joints that cannot be eliminated by normal tightening or recommended procedures

(4) evidence of excessive abrasion or scrubbing on the outer surface of a hose, rigid tube, or fitting

(c) hydraulic motors:

(1) loose bolts or fasteners

(2) leaks at joints between sections

(3) shaft seal leaks

(4) unusual noises or vibration

(5) loss of operating speed

(6) excessive heating of the fluid

(7) loss of pressure

(d) hydraulic cylinders:

(1) drifting caused by fluid leaking across the piston seals

(2) rod seal leakage

(3) leaks at welded joints

(4) scored, nicked, or dented cylinder rods

(5) dented case (barrel)

(6) loose or deformed rod eyes or connecting joints

(e) for combination magnet/grapples, inspect the magnet per para. 20-4.3.3

(f) for electrohydraulic grapples, all electrical components, including meters, indicators, and alarms, shall be tested for proper operation and condition

20-5.3.4 Grapples Not in Regular Use

A grapple that has been idle for a period of 1 month or more should be given an inspection conforming with the requirements of para. 20-5.3.3 before being placed into service.

20-5.3.5 Inspection Records

Dated inspection reports shall be made on critical items listed in para. 20-5.3.3. Records should be available to appointed personnel for each periodic inspection and when the grapple is either modified or repaired.

20-5.3.6 Repairs

Any indications of damage disclosed by the inspection requirements of Section 20-5.3 shall be corrected according to the procedures outlined in para. 20-5.3.8 before normal operation of the grapple is resumed.

20-5.3.7 Testing (03)

(a) New and reinstalled grapples shall be tested by, or under the direction of, a qualified person prior to initial use, to verify compliance with applicable provisions of this volume, including a visual inspection to verify that the grapple contains no visible indications of hazardous conditions.

Copyright ASME International
Provided by IHS under license with ASME
No reproduction or networking permitted without license from IHS Not for Resale

(b) Altered, repaired, or modified grapples shall be tested by a qualified person, or a designated person under the direction of a qualified person. This test may be limited to the provisions affected by the alteration, repair, or modification, as determined by a qualified person with guidance from the manufacturer.

(c) All indicator lights, gages, horns, bells, alarms, pointers, and other warning devices shall be tested.

(d) Dated reports of all operational tests shall be filed.

20-5.3.8 Maintenance

(a) Maintenance Program. A maintenance program should be established and be based on recommendations made by the grapple manufacturer or a qualified person.

(b) Maintenance Procedure

(1) Before maintenance is started on a grapple or its controls, the following precautions shall be taken:

(a) all sources of grapple power shall be disconnected, locked out, and tagged "Out of Service"

(b) hydraulic pressure relieved from all circuits before loosening or removing hydraulic components

(c) a grapple removed from service for repair shall be tagged "Out of Service"

(2) Only qualified personnel shall perform maintenance and tests when required. All moving parts of the grapple for which lubrication is specified should be regularly lubricated. The manufacturer's recommendations as to the points and frequency of lubrication, and types of lubricant, should be used.

(3) Replacement parts shall be at least equal to the original manufacturer's specifications.

(4) After adjustments and repairs have been made, the grapple shall not be returned to service until it has been inspected according to para. 20-5.3.3.

(5) Dated records of repairs and replacements should be made.

(6) Any hazardous condition disclosed by the inspection requirements of paras. 20-5.3.2 and 20-5.3.3 shall be corrected before operation of the grapple is resumed. Adjustments and repairs shall be done under the direction of, or by, a qualified person.

SECTION 20-5.4: OPERATION

20-5.4.1 Operators

Grapples shall be operated only by trained, designated persons.

20-5.4.2 Qualifications

Qualifications for operators of grapples are as follows:

(a) The operator shall be instructed in the use of the grapple by a designated person. Instructions should include, but not be limited to, the following:

(1) instructions in any special operations or precautions

(2) the manufacturer's suggested operating procedures

(3) storage of the grapple to protect it from damage

(4) not exceeding the rated capacity of the grapple nor the material handler by the combined weight of the grapple and the load

(b) The operator shall demonstrate the ability to operate the grapple as instructed before assuming responsibility for using the grapple.

20-5.4.3 Conduct of Grapple Operators

(a) The operator shall give attention to the operation of the grapple during a lifting sequence.

(b) When physically or otherwise unfit, an operator shall not engage in the operation of the grapple.

(c) Operators shall be responsible for those operations under their direct control. Whenever there is any doubt as to safety, the operator shall consult with the designated person before handling the load.

(d) The operator shall respond only to instructions from designated persons. However, the operator shall obey a stop order at all times, no matter who gives it.

(e) The operation of a grapple shall be observed before use and during a shift. Any deficiency observed shall be carefully examined by a designated person. If the deficiency constitutes a hazard, the grapple shall be removed from service and tagged "Out of Service." Any indication of a hazardous condition shall be reported to a qualified person for evaluation.

(f) The operator shall be familiar with standard hand signals.

(g) The operator shall land any load and store the grapple before leaving the material handler.

(h) All controls shall be tested by the operator before use during a shift. If any controls do not operate properly, they should be adjusted or repaired before operations are begun.

(i) The operator shall not allow others to ride loads or the grapple.

(j) The operator and other personnel shall stay clear of the load.

20-5.4.4 Grapple Operating Practices

(a) Grapples shall be operated by the following qualified personnel:

(1) designated persons

(2) trainees under the direct supervision of a designated person

(3) maintenance and test personnel, when it is necessary in the performance of their duties

(b) The grapple shall not be loaded in excess of its rated load or handle any load for which it is not designed.

(c) The grapple shall be applied to the load in accordance with the instruction manual.

Copyright ASME International
Provided by IHS under license with ASME
No reproduction or networking permitted without license from IHS Not for Resale

(d) The temperature of the load shall not exceed the maximum allowable limits of the grapple.

(e) The grapple shall be brought over the load in such a manner as to minimize swinging.

(f) Do not allow load or grapple to come into contact with any obstruction.

(g) The operator shall avoid carrying the load over people.

(h) The operator shall not leave suspended loads unattended.

20-5.4.5 Miscellaneous Operating Practices

(a) An operator shall not use a grapple that is tagged "Out of Service" or otherwise designated as nonfunctioning.

(b) "Out of Service" tags on grapples shall not be removed without the approval of the person placing them or an authorized person.

(c) The grapple, when not in use, shall be stored.

(d) Caution should be taken that operating markings or tags shall not be removed or defaced. Missing or illegible markings or tags shall be replaced.

SECTION 20-5.5: INSTRUCTION MANUALS

The manufacturer shall provide operating instructions, and maintenance and parts information.

--`,,`,,`-`-`,,`,,`,`,,`---
Copyright ASME International
Provided by IHS under license with ASME
No reproduction or networking permitted without license from IHS
Not for Resale

ASME B30.20-2003 INTERPRETATIONS

Replies to Technical Inquiries
January 1999 through September 2002

FOREWORD

This publication includes all of the written replies issued between the indicated dates by the Secretary, speaking for the ASME B30 Standards Committee, Safety Standards for Cableways, Cranes, Derricks, Hoists, Hooks, Jacks, and Slings, to inquiries concerning interpretations of technical aspects of ASME B30.20, Below-The-Hook Lifting Devices.

These replies are taken verbatim from the original letters except for a few typographical corrections and some minor editorial corrections made for the purpose of improved clarity. In some few instances, a review of the interpretation revealed a need for corrections of a technical nature; in these cases, a corrected interpretation follows immediately after the original reply.

These interpretations were prepared in accordance with the accredited ASME procedures. ASME procedures provide for reconsideration of these interpretations when or if additional information is available that the inquirer believes might affect the interpretation. Further, persons aggrieved by this interpretation may appeal to the cognizant ASME Committee or Subcommittee. ASME does not "approve," "certify," "rate," or "endorse" any item, construction, proprietary device, or activity.

Copyright ASME International
Provided by IHS under license with ASME
No reproduction or networking permitted without license from IHS
Not for Resale

Interpretation: 20-11

Subject: ASME B30.20-1993, Below-The-Hook Lifting Devices

Date Issued: January 13, 1999

Question (1): Paragraph 20-1.2.2 states: "A lifter shall be designed to withstand the forces imposed by its rated load, with a minimum design factor of 3, based on yield strength for load bearing structural components." How should this paragraph be interpreted relative to yield strength?

Reply (1): See Reply (4).

Question (2): Is the design factor mentioned in para. 20-1.2.2 related to a design based on either of the following:

(a) first micro-yield (localized yielding) based on an analysis using curved beam calculations for the device?

(b) yielding based on the onset of permanent, plastic deformation (macroscopic yield) of the entire device geometry?

(c) is there a different way the yield strength is to be understood?

Reply (2): See Reply (4).

Question (3): Parameters for the design factor could be separated into two main categories: design parameters and material parameters.

Design parameters might include the use of curved beam theory for the calculations, analysis using a linear elastic response, the size factor of the device, the reliability of the device, and the temperature of the device.

Material parameters might include the endurance limit of the material, the endurance limit of the mechanical element, the surface effects of the device itself, the modifying factor for any stress concentrations of the device, and the microstructure of the device material.

Having made the above classifications, can it be interpreted that the design factor established in para. 20-1.2.2 is to be applied to the load calculations after the design parameters have been established, and that the material parameters are accounted for in the design factor?

Reply (3): See Reply (4).

Question (4): If the assumption made in Question (3) is not correct, which modifying parameters for design factors are to be included before the application of the design factor of 3?

Reply (4): Paragraph 20-1.2.2 determines the maximum allowable stress for materials used as load-bearing structural components. Analysis or actual maximum working stresses must be determined based upon working conditions including impact or any other factors pertinent to the application. Actual maximum working stresses must be equal to or less than the allowable stress.

The intent of para. 20-1.2.2 is that the load suspension parts of a lifter shall be designed so that the static stress calculations for the rated load shall not exceed 33% of the yield strength.

The Standard is designed to guard against and minimize injury to workers and otherwise provide protection of life, limb, and property by prescribing safety requirements. This Standard is not a design standard and does not preclude applicable standards whose guidelines result in lower allowable stresses.

Copyright ASME International
Provided by IHS under license with ASME
No reproduction or networking permitted without license from IHS Not for Resale

Interpretation: 20-12

Subject: ASME B30.20-1993, Below-The-Hook Lifting Devices

Date Issued: June 11, 1999

Question: Paragraph 20-1.2.2 states: "A lifter shall be designed to withstand the forces imposed by its rated load, with a minimum design factor of 3, based on yield strength for load-bearing structural components."

Paragraph 20-1.4.2(a) states: "Prior to initial use, all new, altered, modified, or repaired lifting devices should be tested and inspected by or under the direction of a qualified person and a written report be furnished by such a person, confirming the load rating of the lifter. The load rating should not be more than 80% of the maximum load sustained during the test. Test loads shall not be more than 125% of the rated load unless otherwise recommended by the manufacturer. Test reports should be available."

Was the minimum design factor of 3 (based on yield) strength selected so that the dynamic loading (which could double the static stresses) would leave at least 50% margin before the device components would be exposed to their yield strength?

Reply: No. A minimum design factor of 3, based on yield strength, was chosen to minimize the probability of lifter failure due to normal variability and uncertainty arising from design manufacturing and use of below-the-hook lifters.

Interpretation: 20-13

Subject: ASME B30.20c-1998, Below-The-Hook Lifting Devices, Para. 20-1.2.2

Date Issued: May 23, 2000

Question (1): In interpretation 20-3, the last line states: "This standard is not a design standard..." Paragraph 20-1.2.2 states: "A lifter shall be designed to..." This seems to be a direct contradiction. What is the intention of para. 20-1.2.2 if it is not a design standard?

Reply (1): As stated in interpretation 20-3, "The intent of Section 20-1.2.2 is that the load suspension parts of a lifter shall be designed so that the static stress calculation of the rated load shall not exceed 33% of the yield strength."

Question (2): Is the intent of para. 20-1.2.2 to apply the 3 to 1 minimum design factor based on yield strength after considering stress concentration factors, laboratory testing and/or FEA (finite element analysis) software to determine the actual maximum stress?

Reply (2): Please see Reply (1).

Question (3): In para. 20-1.2.2 does it seem reasonable to apply a minimum design factor of 3, based on yield strength of the steel, to any part with no regard to the ultimate strength of the steel?

Reply (3): Subjects not covered within the B30.20 Volume cannot be interpreted. The ASME B30 Standards Committee is presently developing the standardization of design criteria for below-the-hook lifting devices, which will address this subject.

Copyright ASME International
Provided by IHS under license with ASME
No reproduction or networking permitted without license from IHS Not for Resale

Interpretation: 20-14

Subject: ASME B30.20-1999, Below-The-Hook Lifting Devices, paras. 20-1.6.2(a) and (b), 20-1.6.3, and 20-1.6.4(e)

Date Issued: September 26, 2000

Question (1): If a *pressure gripping* type lifting device is to be attached by another designated person and is not attached, or mechanically operated, by the person who operates the crane that hoists the lifting device, are paras. 20-1.6.2(a) and (b) intended to apply to the crane operator?

Reply (1): No.

Question (2): Do any of the recommendations or requirements defined in para. 20-1.6.3 apply to a crane operator: who does not attach or mechanically operate the *pressure gripping* lifting device; who is not the designated operator of the below-the-hook lifting device; whose sole function is to operate the crane that hoists the lifting device and its attached load?

Reply (2): No.

Question (3): If there are recommendations or requirements that are defined in para. 20-1.6.3 that are intended to apply to the crane operator as defined in Question (2) above, in which subparagraphs of 20-1.6.3 are they found?

Reply (3): ASME B30.20 does not address crane operators as defined in Question (2).

Question (4): What does the phrase "the load is correctly distributed for the lifter being used" mean as used in para. 20-1.6.4(e)?

Reply (4): The phrase means as described in the lifting device manufacturer's operating instructions.

Copyright ASME International
Provided by IHS under license with ASME
No reproduction or networking permitted without license from IHS Not for Resale

Interpretation: 20-15

Subject: ASME B30.20-1993, Below-The-Hook Lifting Devices, Sections 20-1.2 and 20-1.4

Date Issued: May 30, 2002

Question (1): Paragraph 20-1.2.1 states: "The rated load of the lifting device shall be marked on the main structure where it is visible. If the lifting device is made up of several lifters, each detachable from the group, these lifters shall also be marked with their individual rated loads."

If a lifting device is composed of four components, one main lifting components and three subcomponents that attach to the main component independently or in combinations with each other, is the standard requiring each combination and each individual component/subcomponent be labeled with the rated load?

Reply (1): Each combination shall be marked on the one main lifting component with its rated load. If three individual subcomponents are not lifting devices in and of themselves they need not be marked with the rated load.

Question (2): Paragraph 20-1.2.2 states: "Structural and mechanical lifters may be modified or rerated provided such modifications are analyzed and approved by the equipment manufacturer or a qualified person. A rerated lifter or one whose components have been modified shall conform to para. 20-1.2.2 and be tested according to Section 20-1.4. New rated load shall be displayed in accordance with para. 20-1.2.1."

In Question (1), if each of the four components is modified, is each component to be tested or is each combination to be tested, or both?

Reply (2): Each combination shall be tested, and if the three individual subcomponents are lifting devices in and of themselves they shall be individually tested.

Question (3): Paragraph 20-1.2.2 states: "The load bearing structural components of a lifter shall be designed to withstand the stresses imposed by its rated load plus the weight of the lifter, with a minimum design factor of three, based on yield strength of the material, and with stress ranges that do not exceed the values given in ANSI/AWS D14.1 for the applicable conditions."

Are we to interpret the standard as implying that a qualified person be the individual(s) to design the structural components?

Reply (3): Yes, the equipment manufacturer or a qualified person.

Question (4): Paragraph 20-1.4.2 states: "Prior to initial use, all new, altered, modified, or repaired lifting devices should be tested and inspected by or under the direction of a qualified person and a written report be furnished by such a person, confirming the load rating of the lifter. The load rating should not be more than 80% of the maximum load sustained during the test. Test loads shall not be more than 125% of the rated load unless otherwise recommended by the manufacturer. Test reports should be available."

Paragraph 20-1.4.2 states that a modified structural component should be tested and inspected, while para. 20-1.2.2 states the modified component shall be tested. Is it required to test a modified lifting device?

Reply (4): Paragraph 20-1.2.2(d) states: "A rerated lifter or one whose components have been modified shall be tested according to Section 20-1.4..." Section 20-1.4, Testing, is made up of two parts, 20-1.4.1 Operational Tests, and 20-1.4.2 Rated Load Test. The Operational Tests are mandatory and use the wording "shall be tested" while the para. 20-1.4.2 Rated Load Test is advisory and use the wording "should be tested and inspected."

Question (5): What if you have several lifting devices, new or modified, but are of the same design, is it required to test each lifting device?

Reply (5): Yes, see Reply (4) for the type of tests to be performed.

Copyright ASME International
Provided by IHS under license with ASME
No reproduction or networking permitted without license from IHS Not for Resale

Question (6): Are specialized lifting devices used for only one purpose exempt from ASME B30.20?

Reply (6): No.

Interpretation: 20-16

Subject: ASME B30.20-1999, Below-The-Hook Lifting Devices, Sections 20-0.2 and 20-1.2.2

Date Issued: September 20, 2002

Question (1): Is there a more detailed intepretation to *qualified person* (Section 20-0.2)?

Reply (1): No.

Question (2): I have a bachelor's degree in mechanical engineering; does this mean I am a qualified person?

Reply (2): No. An engineering degree alone does not fulfill the requirements for a qualified person, unless the degree is in the applicable field and the person has successfully demonstrated the ability to solve or resolve problems related to the subject matter and work.

Question (3): Do I need to be a licensed P.E. to be considered a qualified person?

Reply (3): No.

Question (4): What documentation is required to ensure that the guidelines specified in para. 20-1.2.2 are met?

Reply (4): The form documentation is beyond the scope of this volume. ASME B30.20-1999 does not mandate that the designer or manufacturer of the lifter shall provide documentation supporting compliance with these requirements.

Question (5): Does a lifting device have to be made from a certified drawing that has been approved by a Licensed Engineer?

Reply (5): No.

Question (6): Is the manufacturer's load test and inspection report all that is required to meet the requirements of Section 20-1.2.2?

Reply (6): See Reply (4).

Question (7): If the device passes the load test, how do we know it meets the minimum design factor of three based on the material's yield strength?

Reply (7): It is not the purpose of para. 20-1.4.2 to verify the design factor requirements of para. 20-1.2.2. Passing this test does not verify that the lifter meets the minimum design factor requirements of para. 20-1.2.2. Calculations can be performed to verify the design factor.

Copyright ASME International
Provided by IHS under license with ASME
No reproduction or networking permitted without license from IHS Not for Resale

ASME Services

ASME is committed to developing and delivering technical information. At ASME's Information Central, we make every effort to answer your questions and expedite your orders. Our representatives are ready to assist you in the following areas:

ASME Press
Codes & Standards
Credit Card Orders
IMechE Publications
Meetings & Conferences
Member Dues Status
Member Services & Benefits
Other ASME Programs
Payment Inquiries
Professional Development
Short Courses
Publications
Public Information
Self-Study Courses
Shipping Information
Subscriptions/Journals/Magazines
Symposia Volumes
Technical Papers

How can you reach us? It's easier than ever!

There are four options for making inquiries* or placing orders. Simply mail, phone, fax, or E-mail us and an Information Central representative will handle your request.

Mail
ASME
22 Law Drive, Box 2900
Fairfield, New Jersey
07007-2900

Call Toll Free
US & Canada: 800-THE-ASME
(800-843-2763)
Mexico: 95-800-THE-ASME
(95-800-843-2763)
Universal: 973-882-1167

Fax—24 hours
973-882-1717
973-882-5155

E-Mail—24 hours
Infocentral@asme.org

* Information Central staff are not permitted to answer inquiries about the technical content of this code or standard. Information as to whether or not technical inquiries are issued to this code or standard is shown on the copyright page. All technical inquiries must be submitted in writing to the staff secretary. Additional procedures for inquiries may be listed within.

--`,,`,,`-`-`,,`,,`,`,,`---

Copyright ASME International
Provided by IHS under license with ASME
No reproduction or networking permitted without license from IHS

Not for Resale

--`,,`,,`-`-`,,`,,`,`,,`---

Copyright ASME International
Provided by IHS under license with ASME
No reproduction or networking permitted without license from IHS

Not for Resale



Copyright ASME International
Provided by IHS under license with ASME
No reproduction or networking permitted without license from IHS
Not for Resale