ASME B30.13-2003
(Revision of ASME B30.13-1996)

STORAGE/RETRIEVAL (S/R) MACHINES AND ASSOCIATED EQUIPMENT

AN AMERICAN NATIONAL STANDARD



The American Society of Mechanical Engineers

Copyright ASME International
Provided by IHS under license with ASME
No reproduction or networking permitted without license from IHS

Not for Resale

The American Society of Mechanical Engineers

AN AMERICAN NATIONAL STANDARD

STORAGE/RETRIEVAL (S/R) MACHINES AND ASSOCIATED EQUIPMENT

ASME B30.13-2003

(Revision of ASME B30.13-1996)

SAFETY STANDARD FOR CABLEWAYS, CRANES, DERRICKS, HOISTS, HOOKS, JACKS, AND SLINGS

Copyright ASME International
Provided by IHS under license with ASME
No reproduction or networking permitted without license from IHS

Not for Resale

Date of Issuance: June 30, 2003

The next edition of this Standard is scheduled for publication in 2008. There will be no addenda issued to this edition.

ASME issues written replies to inquiries concerning interpretations of technical aspects of this Standard. Interpretations are published on the ASME Web site under the Committee Pages at http://www.asme.org/codes/ as they are issued, and will also be published within the next edition of the Standard.

ASME is the registered trademark of The American Society of Mechanical Engineers.

This code or standard was developed under procedures accredited as meeting the criteria for American National Standards. The Standards Committee that approved the code or standard was balanced to assure that individuals from competent and concerned interests have had an opportunity to participate. The proposed code or standard was made available for public review and comment that provides an opportunity for additional public input from industry, academia, regulatory agencies, and the public-at-large.

ASME does not "approve," "rate," or "endorse" any item, construction, proprietary device, or activity.

ASME does not take any position with respect to the validity of any patent rights asserted in connection with any items mentioned in this document, and does not undertake to insure anyone utilizing a standard against liability for infringement of any applicable letters patent, nor assume any such liability. Users of a code or standard are expressly advised that determination of the validity of any such patent rights, and the risk of infringement of such rights, is entirely their own responsibility.

Participation by federal agency representative(s) or person(s) affiliated with industry is not to be interpreted as government or industry endorsement of this code or standard.

ASME accepts responsibility for only those interpretations of this document issued in accordance with the established ASME procedures and policies, which precludes the issuance of interpretations by individuals.

No part of this document may be reproduced in any form,
in an electronic retrieval system or otherwise,
without the prior written permission of the publisher.

The American Society of Mechanical Engineers
Three Park Avenue, New York, NY 10016-5990

Copyright © 2003 by
THE AMERICAN SOCIETY OF MECHANICAL ENGINEERS
All rights reserved
Printed in U.S.A.

--`,,`,,`-`-`,,`,,`,`,,`---

Copyright ASME International
Provided by IHS under license with ASME
No reproduction or networking permitted without license from IHS

Not for Resale

CONTENTS

Foreword iv
Committee Roster v
Introduction vi
Summary of Changes ix

Chapter 13-0 **Scope, Definitions, and References** 1
Section 13-0.1 Scope of B30.13 1
Section 13-0.2 Definitions 1
Section 13-0.3 References to Other Codes and Standards 4

Chapter 13-1 **Construction and Installation** 5
Section 13-1.1 Marking 5
Section 13-1.2 Clearances 5
Section 13-1.3 General Construction 5
Section 13-1.4 Cabs 5
Section 13-1.5 Lubrication 6
Section 13-1.6 Platforms, Ladders, and Personnel Access to Aisles and Runways 6
Section 13-1.7 Stops, Bumpers (Buffers), Interlocks, Sweeps, and Guards 7
Section 13-1.8 Brakes 7
Section 13-1.9 Electrical Equipment 8
Section 13-1.10 Hoisting Equipment 10
Section 13-1.11 Documentation 12

Chapter 13-2 **Inspection, Testing, and Maintenance** 13
Section 13-2.1 Inspection 13
Section 13-2.2 Testing 14
Section 13-2.3 Maintenance 14
Section 13-2.4 Rope Inspection, Replacement, and Maintenance 15
Section 13-2.5 Roller Chain and Leaf Chain Inspection, Replacement, and Maintenance 16
Section 13-2.6 Welded Link Chain Inspection, Replacement, and Maintenance 17

Chapter 13-3 **Operation** 18
Section 13-3.1 Qualifications for and Conduct of Operators 18
Section 13-3.2 Handling the Load 19
Section 13-3.3 Miscellaneous 19

Figures
1 Typical Unit Load S/R Machine 2
2 Typical Aisle Transfer Car 2
3 Typical Operator Ridden S/R Machine 3

Copyright ASME International
Provided by IHS under license with ASME
No reproduction or networking permitted without license from IHS
Not for Resale

FOREWORD

This American National Standard, Safety Standard for Cableways, Cranes, Derricks, Hoists, Hooks, Jacks, and Slings, has been developed under the procedures accredited by the American National Standards Institute (formerly the United States of America Standards Institute). This Standard had its beginning in December 1916 when an eight-page Code of Safety Standards for Cranes, prepared by an ASME Committee on the Protection of Industrial Workers, was presented to the annual meeting of the ASME.

Meetings and discussions regarding safety on cranes, derricks, and hoists were held from 1920 to 1925, involving the ASME Safety Code Correlating Committee, the Association of Iron and Steel Electrical Engineers, the American Museum of Safety, the American Engineering Standards Committee (later changed to American Standards Association and subsequently to the USA Standards Institute), Department of Labor — State of New Jersey, Department of Labor and Industry — State of Pennsylvania, and the Locomotive Crane Manufacturers Association. On June 11, 1925, the American Engineering Standards Committee approved the ASME Safety Code Correlating Committee's recommendation and authorized the project with the U.S. Department of the Navy, Bureau of Yards and Docks, and ASME as sponsors.

In March 1926, invitations were issued to 50 organizations to appoint representatives to a Sectional Committee. The call for organization of this Sectional Committee was sent out October 2, 1926, and the committee organized November 4, 1926, with 57 members representing 29 national organizations. The Safety Code for Cranes, Derricks, and Hoists, ASA B30.2-1943, was created from the eight-page document referred to in the first paragraph. This document was reaffirmed in 1952 and widely accepted as a safety standard.

Due to changes in design, advancement in techniques, and general interest of labor and industry in safety, the Sectional Committee, under the joint sponsorship of ASME and the Naval Facilities Engineering Command, U.S. Department of the Navy, was reorganized as an American National Standards Committee on January 31, 1962, with 39 members representing 27 national organizations.

The format of the previous code was changed so that separate volumes (each complete as to construction and installation; inspection, testing, and maintenance; and operation) would cover the different types of equipment included in the scope of B30.

In 1982, the Committee was reorganized as an Accredited Organization Committee, operating under procedures developed by ASME and accredited by the American National Standards Institute.

This Standard presents a coordinated set of rules that may serve as a guide to government and other regulatory bodies and municipal authorities responsible for the guarding and inspection of the equipment falling within its scope. The suggestions leading to accident prevention are given both as mandatory and advisory provisions; compliance with both types may be required by employers of their employees.

In case of practical difficulties, new developments, or unnecessary hardship, the administrative or regulatory authority may grant variances from the literal requirements or permit the use of other devices or methods, but only when it is clearly evident that an equivalent degree of protection is thereby secured. To secure uniform application and interpretation of this Standard, administrative or regulatory authorities are urged to consult the B30 Committee, in accordance with the format described in Section III, before rendering decisions on disputed points.

This volume of the Standard, which was approved by the B30 Standards Committee and by ASME, was approved by ANSI and designated as an American National Standard on February 19, 2003.

Safety codes and standards are intended to enhance public safety. Revisions result from committee consideration of factors such as technological advances, new data, and changing environmental and industry needs. Revisions do not imply that previous editions were inadequate.

Copyright ASME International
Provided by IHS under license with ASME
No reproduction or networking permitted without license from IHS
Not for Resale

ASME B30 STANDARDS COMMITTEE
Safety Standards for Cableways, Cranes, Derricks, Hoists, Hooks, Jacks, and Slings

(The following is the roster of the Committee at the time of approval of this Standard.)

STANDARDS COMMITTEE OFFICERS

P. S. Zorich, *Chair*
B. D. Closson, *Vice Chair*
J. D. Wendler, *Secretary*

STANDARDS COMMITTEE PERSONNEL

N. E. Andrew, Sverdrup Technology, Inc.
W. T. Hargrove, *Alternate,* Mantech International Corp.
R. E. Bluff, Mingus Constructors, Inc.
R. J. Bolen, E. I. DuPont
A. D. Brown, Kenney Construction Co.
P. L. Rossi, *Alternate,* U.S. Department of Labor, OSHA
S. C. Buck, International Union of Operating Engineers
L. D. Demark, *Alternate,* International Union of Operating Engineers
T. A. Christensen, Alliance of American Insurers/Liberty Mutual Insurance
M. W. Mills, *Alternate,* Liberty Mutual Group
B. D. Closson, NACB Technical Services, Inc.
T. L. Blanton, *Alternate,* NACB Group, Inc.
J. P. Colletti, John P. Colletti & Associates, Inc.
R. A. Dahlin, Walker Magnetic Group
J. W. Downs, Jr., *Alternate,* Downs Crane and Hoist Co.
D. W. Eckstine, Grove Worldwide
R. H. Fowler, U.S. Department of the Air Force
J. L. Franks, Consultant
R. C. Slater, *Alternate,* McKay International Engineering
J. L. Gordon, FKI Industries, Inc.
R. R. Reisinger, *Alternate,* FKI Industries, Inc.
N. C. Hargreaves, Power Crane & Shovel Association/Terex Corp.
E. D. Fidler, *Alternate,* Terex Corp.
J. J. Headley, Crane Institute of America
R. M. Parnell, *Alternate,* Industrial Training International
C. W. Ireland, Amclyde Engineered Products
A. Egging, *Alternate,* Amclyde Engineered Products
L. S. Johnson, American Equipment Co.
G. L. Owens, *Alternate,* Granite Construction, Inc.
R. M. Kohner, Landmark Engineering Services
H. I. Shapiro, *Alternate,* Specialized Carriers and Rigging Association/Howard I. Shapiro & Associates
H. G. Leidich, Ingersoll-Rand
J. T. Perkins, *Alternate,* Ingersoll-Rand
C. Lucas, The Crosby Group
P. A. Boeckman, *Alternate,* The Crosby Group
L. D. Means, Wire Rope Technical Board/Wire Rope Corp. of America, Inc.
D. M. Sleightholm, *Alternate,* Bridon America Corp.
K. J. Miller, Jacobs Engineering
D. W. Smith, *Alternate,* Chicago Bridge and Iron Co.
J. E. Richardson, U.S. Department of the Navy
J. W. Rowland III, Association of Iron and Steel Engineers/ Bethlehem Steel Corp.
E. E. Rudy, U.S. Department of the Army
J. C. Ryan, BOH Bros. Construction Co.
D. Sayenga, Associated Wire Rope Fabricators
D. J. Bishop, *Alternate,* Bishop Lifting Products, Inc.
G. W. Shields, Caterpillar, Inc.
A. R. Toth, Morris Material Handling
B. E. Weir, Jr., National Erectors Association/Norris Brothers Co., Inc.
S. Conant, *Alternate,* Conant Crane Rental Co.
J. D. Wendler, The American Society of Mechanical Engineers
R. C. Wild, U.S. Army Corps of Engineers
S. G. Testerman, *Alternate,* U.S. Army Corps of Engineers
D. N. Wolff, National Crane Corp.
P. S. Zorich, RZP International Ltd.

HONORARY MEMBERS

J. M. Klibert, Lift-All Co., Inc.
T. S. McKoskey, Consultant
R. W. Parry, Consultant

B30.13 SUBCOMMITTEE PERSONNEL

J. E. Richardson, *Chair,* U.S. Department of the Navy
P. K. Gines, HK Systems
D. K. Koch, Eskay Corp.
J. Krusinski, Munck Automation Technology
C. D. Wenzel, Charles D. Wenzel, Inc.

Copyright ASME International
Provided by IHS under license with ASME
No reproduction or networking permitted without license from IHS
Not for Resale

SAFETY STANDARD FOR CABLEWAYS, CRANES, DERRICKS, HOISTS, HOOKS, JACKS, AND SLINGS

B30 SERIES INTRODUCTION

GENERAL

This Standard is one of a series of safety standards on various subjects which have been formulated under the general auspices of the American National Standards Institute. One purpose of the Standard is to serve as a guide to governmental authorities having jurisdiction over subjects within the scope of the Standard. It is expected, however, that the Standard will find a major application in industry, serving as a guide to manufacturers, purchasers, and users of the equipment.

For the convenience of the user, the Standard has been divided into separate volumes:

B30.1 Jacks
B30.2 Overhead and Gantry Cranes (Top Running Bridge, Single or Multiple Girder, Top Running Trolley Hoist)
B30.3 Construction Tower Cranes
B30.4 Portal, Tower, and Pedestal Cranes
B30.5 Mobile and Locomotive Cranes
B30.6 Derricks
B30.7 Base Mounted Drum Hoists
B30.8 Floating Cranes and Floating Derricks
B30.9 Slings
B30.10 Hooks
B30.11 Monorails and Underhung Cranes
B30.12 Handling Loads Suspended From Rotorcraft
B30.13 Storage/Retrieval (S/R) Machines and Associated Equipment
B30.14 Side Boom Tractors
B30.15 Mobile Hydraulic Cranes
Note: B30.15-1973 has been withdrawn. The revision of B30.15 is included in the latest edition of B30.5.
B30.16 Overhead Hoists (Underhung)
B30.17 Overhead and Gantry Cranes (Top Running Bridge, Single Girder, Underhung Hoist)
B30.18 Stacker Cranes (Top or Under Running Bridge, Multiple Girder With Top or Under Running Trolley Hoist)
B30.19 Cableways
B30.20 Below-the-Hook Lifting Devices
B30.21 Manually Lever Operated Hoists
B30.22 Articulating Boom Cranes
B30.23 Personnel Lifting Systems
B30.24 Container Cranes[1]
B30.25 Scrap and Material Handlers

If adopted for governmental use, the references to other national codes and standards in the specific volumes may be changed to refer to the corresponding regulations of the governmental authorities.

The use of cableways, cranes, derricks, hoists, hooks, jacks, and slings is subject to certain hazards that cannot be met by mechanical means but only by the exercise of intelligence, care, and common sense. It is therefore essential to have personnel involved in the use and operation of equipment who are competent, careful, physically and mentally qualified, and trained in the safe operation of the equipment and the handling of the loads. Serious hazards are overloading, dropping or slipping of the load caused by improper hitching or slinging, obstructing the free passage of the load, and using equipment for a purpose for which it was not intended or designed.

The Standards Committee fully realizes the importance of proper design factors, minimum or maximum sizes, and other limiting dimensions of wire rope or chain and their fastenings, sheaves, sprockets, drums, and similar equipment covered by the Standard, all of which are closely connected with safety. Sizes, strengths, and similar criteria are dependent on many different factors, often varying with the installation and uses. These factors depend on the condition of the equipment or material; on the loads; on the acceleration or speed of the ropes, chains, sheaves, sprockets, or drums; on the type of attachments; on the number, size, and arrangement of sheaves or other parts; on environmental conditions causing corrosion or wear; and on many variable factors that must be considered in each individual case. The rules given in the Standard must be interpreted accordingly, and judgment used in determining their application.

Some of the provisions of this Standard require compliance with information found in manuals or other documents supplied by the manufacturer with the equipment. The information includes recommendations, requirements, and instructions (e.g., "the reeving shall

[1] B30.24, B30.26, B30.27, and B30.28 are in the developmental stage. **(03)**

Copyright ASME International
Provided by IHS under license with ASME
No reproduction or networking permitted without license from IHS
Not for Resale

be checked for compliance with the recommendations of the manufacturer").

Compliance with the provisions should not preclude the possibility of consulting a qualified person. This is particularly true when: the equipment has been altered, repaired, or modified; the manuals or documents supplied by the manufacturer are no longer available; or the manufacturer or a successor is no longer in business and the manuals are no longer available. However, the purpose of consulting a qualified person shall not be to avoid contacting the manufacturer and using the information supplied by the manufacturer.

The Standards Committee will be glad to receive criticisms of this Standard's requirements and suggestions for its improvement, especially those based on actual experience in application of the rules.

Suggestions for changes to the Standard should be submitted to the Secretary of the B30 Committee, ASME, Three Park Avenue, New York, NY 10016-5990, and should be in accordance with the following format:

(a) cite the specific paragraph designation of the pertinent volume;

(b) indicate the suggested change (addition, deletion, revision, etc.);

(c) briefly state the reason and/or evidence for the suggested change;

(d) submit suggested changes to more than one paragraph in the order that the paragraphs appear in the volume.

The B30 Committee will consider each suggested change in a timely manner in accordance with its procedures.

(03) SECTION I: SCOPE

This Standard applies to the construction, installation, operation, inspection, maintenance, and safe use of lifting equipment used in construction and industrial settings. This includes, but is not limited to: articulating-boom, container, gantry, mobile, pedestal, portal, tower, and stacker cranes; balance-lifting units; below-the-hook lifting devices; cableways; derricks; jacks; hoists; hooks; loads suspended from rotorcraft; material placement systems; monorails; rigging hardware; slings; and scrap and material handlers.

SECTION II: PURPOSE

This Standard is designed to:

(a) guard against and minimize injury to workers, and otherwise provide for the protection of life, limb, and property by prescribing safety requirements;

(b) provide direction to owners, employers, supervisors, and others concerned with, or responsible for, its application; and

(c) guide governments and other regulatory bodies in the development, promulgation, and enforcement of appropriate safety directives.

SECTION III: INTERPRETATIONS

Upon request, the B30 Committee will render an interpretation of any requirement of the Standard. Interpretations can only be rendered in response to a written request sent to the Secretary of the B30 Committee, ASME, Three Park Avenue, New York, NY 10016-5990.

The request for interpretation should be clear and unambiguous. It is further recommended that the inquirer submit his request utilizing the following format.

Subject: Cite the applicable paragraph number(s) and provide a concise description.

Edition: Cite the applicable edition of the pertinent volume for which the interpretation is being requested.

Question: Phrase the question as a request for an interpretation of a specific requirement suitable for general understanding and use, not as a request for approval of a proprietary design or situation. The inquirer may also include any plans or drawings which are necessary to explain the question; however, they should not contain any proprietary names or information.

Requests that are not in this format will be rewritten in this format by the Committee prior to being answered, which could change the intent of the original request.

ASME procedures provide for reconsideration of any interpretation when or if additional information which might affect an interpretation is available. Further, persons aggrieved by an interpretation may appeal to the cognizant ASME Committee or Subcommittee. ASME does not "approve," "certify," "rate," or "endorse" any item, construction, proprietary device, or activity.

SECTION IV: NEW AND EXISTING INSTALLATIONS

(a) Effective Date. The effective date of this volume for the purpose of defining new and existing installations shall be 1 year after its date of issuance.

(b) New Installations. Construction, installation, inspection, testing, maintenance, and operation of equipment manufactured and facilities constructed after the effective date of this volume shall conform with the mandatory requirements of this volume.

(c) Existing Installations. Inspection, testing, maintenance, and operation of equipment manufactured and facilities constructed prior to the effective date of this volume shall be done, as applicable, in accordance with the requirements of this volume.

Copyright ASME International
Provided by IHS under license with ASME
No reproduction or networking permitted without license from IHS
Not for Resale

It is not the intent of this volume to require retrofitting of existing equipment. However, when an item is being modified, its performance requirement shall be reviewed relative to the current volume. If the performance differs substantially, the need to meet the current requirement shall be evaluated by a qualified person selected by the owner (user). Recommended changes shall be made by the owner (user) within 1 year.

SECTION V: MANDATORY AND ADVISORY RULES

Mandatory rules of this volume are characterized by use of the word *shall.* If a provision is of an advisory nature, it is indicated by use of the word *should* and is a recommendation to be considered, the advisability of which depends on the facts in each situation.

SECTION VI: METRIC CONVERSIONS

The values stated in U.S. Customary units are to be regarded as the standard.

--`,,`,,`-`-`,,`,,`,`,,`---

Copyright ASME International
Provided by IHS under license with ASME
No reproduction or networking permitted without license from IHS

Not for Resale

ASME B30.13-2003
SUMMARY OF CHANGES

Following approval by the ASME B30 Committee and ASME, and after public review, ASME B30.13-2003 was approved by the American National Standards Institute on February 19, 2003.

ASME B30.13-2003 includes editorial changes, revisions, and corrections introduced in B30.13a-1997, B30.13b-1998, and B30.13c-1999, as well as the following changes identified by a margin note, **(03)**.

Page	*Location*	*Change*
vi	General	Footnote 1 Revised
vii	Section 1: Scope	Revised

Copyright ASME International
Provided by IHS under license with ASME
No reproduction or networking permitted without license from IHS
Not for Resale

--`,,```,,,,````-`-`,,`,,`,`,,`---

Copyright ASME International
Provided by IHS under license with ASME
No reproduction or networking permitted without license from IHS
Not for Resale

STORAGE/RETRIEVAL (S/R) MACHINES AND ASSOCIATED EQUIPMENT

Chapter 13-0
Scope, Definitions, and References

SECTION 13-0.1: SCOPE OF B30.13

Within the general scope defined in Section I, ASME B30.13 applies to storage/retrieval (S/R) machines and associated equipment, such as aisle transfer cars and aisle equipment (as defined in para. 13-0.2.1), and interfaces with other material handling equipment covered under other standards. The provisions of this Standard applying to S/R machines shall apply equally to the construction, installation, inspection, testing, maintenance, and operation of aisle transfer cars and any load handling equipment which is part of or attached to S/R machines or aisle transfer cars.

SECTION 13-0.2: DEFINITIONS

13-0.2.1 Types of Equipment

storage/retrieval (S/R) machines: a machine operating on floor or other mounted rail(s) used for transferring a load from a storage compartment to a pickup and deposit (P and D) station and from a P and D station to a storage compartment. The movement of the storage/retrieval machine may be both vertical and parallel in the aisle. A storage/retrieval machine is sometimes called a storage crane or S/R machine, but it is different from a stacker crane. A typical unit load storage/retrieval machine is shown in Fig. 1.

aisle transfer car: a machine or vehicle for transferring an S/R machine from aisle to aisle and that normally runs on a rail or rails (see Fig. 2).

automatic (S/R) machine: an S/R machine which when activated operates through a preset program cycle or cycles.

operator ridden (S/R) machine: an S/R machine, with a cab attached to the machine and with an operator in the cab, whose movements can be controlled either manually or automatically (see Fig. 3).

13-0.2.2 General

administrative or regulatory authority: governmental agency or the employer in the absence of governmental jurisdiction.

aisle, machine: space between storage compartment rows in which the S/R machine operates.

aisle, pedestrian: a walkway designated for pedestrian traffic.

ampacity: current-carrying capacity of electric conductors expressed in amperes.

appointed: assigned specific responsibilities by the employer or the employer's representative.

authorized: approved by a duly constituted administrative or regulatory authority.

automatic or automatically: pertains to equipment functions which do not require the attention of the operator during their functional operation.

brake: a device, other than a motor, used for retarding or stopping motion by friction or power means.

buffer: an energy dissipating device for reducing impact when a moving S/R machine reaches the end of its permitted travel, or when two moving S/R machines come into contact.

bumper: an energy absorbing device for reducing impact when a moving S/R machine reaches the end of its permitted travel, or when two moving S/R machines come into contact.

cab: the operator's compartment on an S/R machine.

cab, carriage mounted: an operator's cab which is attached to the carriage of an S/R machine and moves vertically with the carriage.

carriage: that part of an S/R machine by which a load is moved in the vertical direction.

carriage free fall stop: a mechanism used to prevent or stop uncontrolled descent of the carriage in event of loss of support.

Copyright ASME International
Provided by IHS under license with ASME
No reproduction or networking permitted without license from IHS
Not for Resale

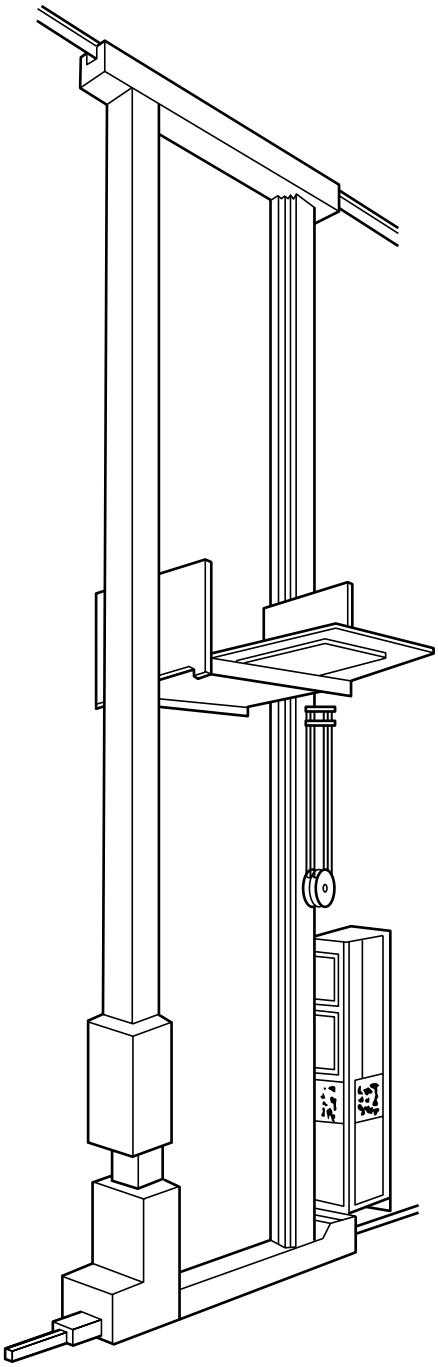

Fig. 1 Typical Unit Load S/R Machine

clearance: the distance between loads, structure, and equipment calculated to allow for operating and installation tolerances, deflections, load displacement, and load integrity.

collectors, current: contacting devices for collecting current from aisle conductors.

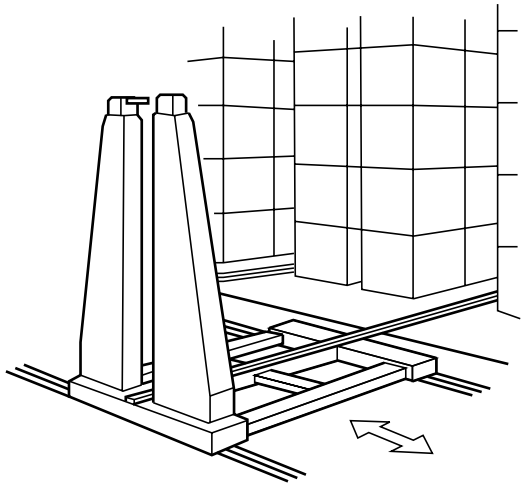

Fig. 2 Typical Aisle Transfer Car

conductors, aisle(s): electrical feeders along the runway that provide power in the S/R machine or aisle transfer car.

control braking means: a method of controlling speed by removing energy from the moving body or by imparting energy in the opposite direction.

control voltage: electrical voltage used in the control components and circuits.

designated person: a person selected or assigned by the employer or the employer's representative as being competent to perform specific duties.

drift point: a point on a horizontal travel motion master switch or on a manual controller that releases the brake while the motor is not energized. This allows for coasting.

fault conditions: a malfunction caused by overload, travel beyond set limits, emergency stop, or failure of components essential to safe operation of the S/R machine or aisle transfer car.

hoist: a machinery unit which is used for lifting and lowering.

hoist chain: a roller or calibrated link chain in a hoist that supports the carriage.

hoist motion: the motion of a storage crane that lifts and lowers the carriage.

load, design: the maximum length, width, height, and weight of a load handled, including any pallet, container, slave pallet, or stacking tolerances.

load, rated: the weight of the design load that the S/R machine is designed to handle.

load, sizing: a process to determine that the loads are dimensionally acceptable for storage.

manual operation: pertains to equipment functions that require action by the operator.

Copyright ASME International
Provided by IHS under license with ASME
No reproduction or networking permitted without license from IHS

Not for Resale

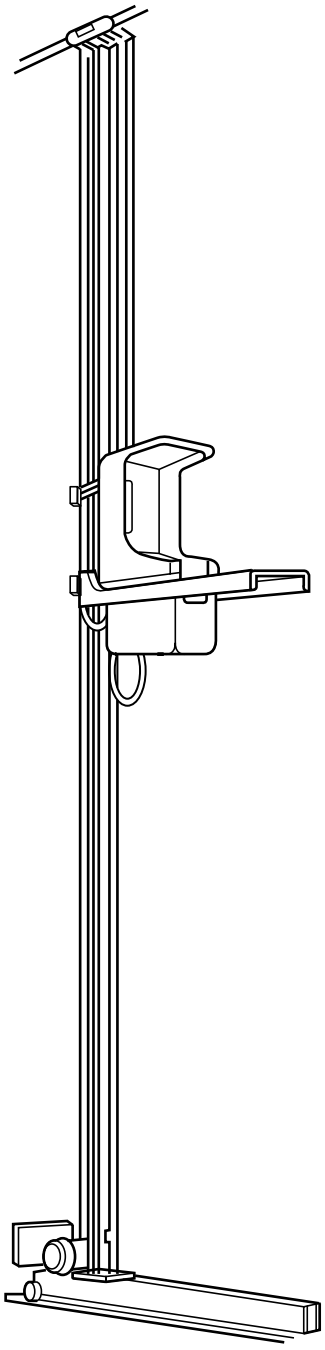

Fig. 3 Typical Operator Ridden S/R Machine

overspeed device: a device that operates independently of the hoisting mechanism of an S/R machine and that senses a downward velocity of the carriage exceeding a preset limit.

pickup and deposit (P and D) station: a location at which a load entering or leaving storage is supported in a manner suitable for handling by the S/R machine. Prior usage has also called this the transfer station, I/O, pickup and delivery station, feed/discharge station, etc.

qualified person: a person who, by possession of a recognized degree in an applicable field, or certificate of professional standing, or by extensive knowledge, training, and experience, has successfully demonstrated the ability to solve or resolve problems relating to the subject matter and work.

rated load speed: the maximum speed at which the S/R machine or aisle transfer car motions are designed to operate under rated load.

remote operation: an S/R machine or aisle transfer car operation in which the motions are controlled or directed from a location other than the machine.

retrieve: to move a desired load from a predetermined, occupied compartment to a P and D station.

rope: refers to wire rope unless otherwise specified

running sheave: a sheave that rotates as a load carriage is lifted or lowered.

runway: the rail or other supporting member that provides path guide and support for the S/R machine and aisle transfer car wheels.

sensor: a device that responds to a physical stimulus and transmits the resulting signal.

service platform: a platform that provides a place for a person to stand while performing service and maintenance.

shall: this word indicates that the rule is mandatory and must be followed.

should: this word indicates that the rule is a recommendation, the advisability of which depends on the facts in each situation.

shuttle: the load supporting mechanism on the carriage that provides for movement of loads into or out of storage compartments or transfer stations.

slave pallet or slave container: a handling base or container which is normally captive to a system on which a unit load is supported.

stop: a device to limit travel. This device normally is attached to a fixed structure and normally does not have energy absorbing ability.

storage location or compartment: the space into which a given unit load is stored. It is dimensioned by the unit load sizes plus all working clearances and tolerances required, including any pallet if part of a system.

storage/retrieval machine service, heavy: service that involves operating at 85%–100% of the rated load, or in excess of 10 lift cycles/hr, as a regular specified procedure.

storage/retrieval machine service, normal: service that involves operating at less than 85% of the rated load and not more than 10 lift cycles/hr, except for isolated instances.

Copyright ASME International
Provided by IHS under license with ASME
No reproduction or networking permitted without license from IHS

Not for Resale

storage/retrieval machine service, severe: service that involves normal or heavy service with abnormal operating conditions.

store: to move a load from a pickup and deposit (P and D) station into a predetermined, unoccupied compartment.

switch: a device for making, breaking, or for changing the connections in an electric circuit.

switch, emergency stop: a manually or automatically operated switch to cut off power independently of the regular operating controls.

switch, limit (sensor): a switch which is operated by some part or motion of a power-driven machine or equipment to alter the circuit associated with the machine or equipment.

switch, main: a switch controlling the main power supply to the S/R machine or aisle transfer car.

switch, master: a switch that dominates the operation of contactors, relays, or other remotely operated devices.

tolerance: the allowance made for manufacturing and installation variances from nominal dimensions.

travel: movement in a direction parallel to the runway.

SECTION 13-0.3: REFERENCES TO OTHER CODES AND STANDARDS

Within the text, reference is made to the following publications, copies of which may be obtained from the publishers as indicated.

ANSI MH16.1-1974, Specification for the Design, Testing, and Utilization of Industrial Steel Storage Racks

ANSI Z26.1-1983, Safety Code for Glazing Materials for Glazing Motor Vehicles Operating on Land Highways

Publisher: American National Standards Institute (ANSI), 25 West 43rd Street, New York, NY 10036

ASME B20.1-1990, Safety Standard for Conveyors and Related Equipment

Publisher: The American Society of Mechanical Engineers (ASME International), Three Park Avenue, New York, NY 10016-5990; Order Department: 22 Law Drive, Box 2300, Fairfield, NJ 07007-2300

ANSI/NFPA 70-1987, National Electrical Code[1]

ANSI/NFPA 231C-1986, Rack Storage of Materials[1]

Publisher: National Fire Protection Association (NFPA), 1 Batterymarch Park, Box 9101, Quincy, MA 02269

Manual of Steel Construction, 8th Edition, 1980

Publisher: American Institute of Steel Construction (AISC), 1 East Wacker Drive, Suite 3100, Chicago, IL 60601

ANSI/AWS D1.1-86, Structural Welding Code — Steel[1]

ANSI/AWS D14.1-85, Specification for Welding of Industrial and Mill Cranes and Other Material Handling Equipment[1]

Publisher: American Welding Society (AWS), 550 N.W. LeJeune Road, Miami, FL 33126

[1] May also be obtained from American National Standards Institute (ANSI), 25 West 43rd Street, New York, NY 10036.

Copyright ASME International
Provided by IHS under license with ASME
No reproduction or networking permitted without license from IHS

Not for Resale

Chapter 13-1
Construction and Installation

SECTION 13-1.1: MARKING

13-1.1.1 S/R Machine Load Markings

These markings shall be visible to the operator(s).

(a) The rated load of the S/R machine shall be marked.

(b) If the S/R stores more than one design load, each design load size shall be shown.

13-1.1.2 Warning Markings

All S/R machines shall have affixed to them and to the S/R machine aisle entrance points or access positions, in a readable position, a durable label or labels displaying the following information concerning operating procedures.

(a) The word CAUTION or other legend designed to bring attention to the label for all personnel in the area.

(b) Cautionary language against:

(1) unauthorized personnel entering the machine aisle

(2) designated personnel entering the machine aisle while the S/R machine is in normal operation

(3) operating S/R machines other than by designated personnel

(4) clearing any malfunctions other than by designated personnel

(5) removing or obscuring warning label

SECTION 13-1.2: CLEARANCES

13-1.2.1 Clearances Within System

The clearances and tolerances within the system are based on the design for proper operation and are determined by the manufacturer and the user or his representitive with consideration given to factors such as:

(a) load configuration

(b) storage structure and equipment configuration

(c) degree of interaction with operating, inspection, and maintenance personnel

(d) allowance for building variations

SECTION 13-1.3: GENERAL CONSTRUCTION

13-1.3.1 Foundations and Anchorage

The foundations and anchorage shall be constructed to accommodate the equipment loadings specified by the manufacturer.

13-1.3.2 S/R Machine Runways

The runways for S/R machines shall be constructed to accommodate the wheel loadings specified by the manufacturer.

13-1.3.2.1 Floor-Mounted or Rack-Mounted Runways

(a) Construction of Runways

(1) The S/R machine runways and supporting structures shall be designed to withstand the loads and forces imposed by the S/R machine under normal operating conditions.

(2) The structure shall be free from detrimental vibration under normal operating conditions.

(3) Rails shall be level, straight, and joined to be compatible with the design of the S/R machine.

(b) Runway Stops

(1) Stops shall be provided at the limits of travel of the S/R machine and aisle transfer car.

(2) Stops shall be designed to withstand the forces applied to the stops as specified in para. 13-1.7.1 of this Standard.

13-1.3.3 Welded Construction

All welding procedures and welding operator qualifications to be used on load sustaining members shall be in accordance with ANSI/AWS D1.1 except as modified by ANSI/AWS D14.1. Where special steels or other materials are used, the manufacturer of the S/R machine shall provide welding procedures.

13-1.3.4 Modifications

S/R machines may be modified or rerated provided such modifications and the supporting structure are analyzed by a qualified person or the manufacturer. A rerated machine or one whose load-supporting components have been modified shall be tested in accordance with para. 13-2.2.2. New rated load or design load shall be displayed in accordance with para. 13-1.1.1.

SECTION 13-1.4: CABS

13-1.4.1 Cab Location on an Operator Ridden S/R Machine

(a) The general arrangement of the cab and location of the control equipment shall be such that all devices necessary to select, initiate, or terminate an automatic cycle or to start or stop each manually controlled operation are within convenient reach of the operator.

Copyright ASME International
Provided by IHS under license with ASME
No reproduction or networking permitted without license from IHS
Not for Resale

(b) The cab shall be clear of all fixed structures within its area of possible movement.

13-1.4.2 Cab Construction

(a) The cab interior construction should protect the operator from knobs, edges, or corners in the event of sudden crane accelerations or decelerations.

(b) The cab should be constructed and installed to minimize swaying or vibration.

(c) In the absence of an outside platform, the door, if provided, shall open inward or slide and be self-closing. It shall be equipped with positive latching devices to prevent inadvertent opening.

(d) Emergency exit means to the floor shall be provided for all positions of a carriage mounted cab.

(e) While the machine is in motion, all parts of the operator's body shall be kept within the design clearances by the construction of the cab, by hands-on, feet-in-place operating type controls, or by mechanical restraints interlocked with motion controls.

(f) All cab glazing shall be safety glazing material as defined in ANSI Z26.1.

(g) The crane operator shall be protected from falling objects at the normal work station. The protection required shall be based upon the materials being stored and their height. Protection such as an overhead guard or cab location is acceptable. The operator protection shall be designed by a qualified person.

(h) Means shall be provided to limit horizontal displacement of a pallet or container on a carriage toward the operator.

(i) Materials which will propagate combustion or rekindle shall not be used in the construction of the cab.

13-1.4.3 Fire Extinguisher

A portable fire extinguisher, with a basic minimum extinguisher rating of 10 BC, shall be installed in the cab.

13-1.4.4 Lighting

Cab lighting, either natural or artificial, shall provide a level of illumination that enables the operator to observe the operating controls.

SECTION 13-1.5: LUBRICATION

Lubricating points should be accessible from walkways, floor(s), or platforms without the necessity of removing guards or other parts.

SECTION 13-1.6: PLATFORMS, LADDERS, AND PERSONNEL ACCESS TO AISLES AND RUNWAYS

13-1.6.1 Location of Platforms

Service platforms, fixed or removable, should be provided as required for access to controls and other maintenance items.

13-1.6.2 Construction of Platforms

(a) Platforms shall be designed to sustain a distributed load of at least 50 lb/sq ft (2.4 kPa).

(b) Platforms shall have a slip-resistant walking surface.

(c) Handrails for platforms shall be 36 in. (915 mm) to 42 in. (1067 mm) high with an intermediate rail and a 4 in. (102 mm) to 6 in. (152 mm) toeboard.

(d) Ladder access openings in the platform floor should be approximately 24 in. (610 mm) × 27 in. (685 mm) protected with a hinged hatch cover.

13-1.6.3 Fixed Ladders

Fixed ladders, if provided, shall meet the following requirements:

(a) the minimum design live load shall be a single concentrated load of 250 lb (113 kg), concentrated at such a point which will cause maximum stress in the structural member being considered.

(b) rungs shall have a minimum diameter of $\frac{3}{4}$ in. (19 mm), a maximum distance between rungs of 12 in. (305 mm), and a minimum clear width of 16 in. (406 mm).

(c) a minimum climbing space of 15 in. (381 mm) each way from the centerline of the ladder and 30 in. (762 mm) on the climbing side of the ladder shall be provided except when inside cages or hatchways are used.

(d) the distance from the centerline of the rungs to the nearest permanent object in back of the ladder shall be not less than 7 in. (178 mm).

(e) on ladders over 20 ft (6 m) in height, cages shall be provided from a point not more than 8 ft (2.4 m) above the floor, to a point not less than 3 ft 6 in. (1.1 m) above the landing platform unless safety devices as per para. 13-1.6.3(f) are provided. Such cages shall be at least 27 in. (685 mm) clear inside diameter.

(f) ladder safety devices may be used on ladders over 20 ft (6 m) in unbroken height in lieu of cage protection. All ladder safety devices such as those that incorporate life belts, friction brakes, and sliding attachments shall meet the design requirements of the ladders that they serve.

(g) when exiting at the top of the ladder, handrails of at least 3 ft 6 in. (1.1 m) shall extend vertically from the top level of the ladder; otherwise, the ladder will extend an additional similar distance above the point of exit.

13-1.6.4 Access to Cab or Service Platform

Access to the cab or service platform shall be by means requiring no step over any gap exceeding 12 in. (305 mm).

13-1.6.5 Personnel Access to Machine Aisles and Runways

Machine aisles and runways shall be clearly designated to be used by authorized personnel only.

Copyright ASME International
Provided by IHS under license with ASME
No reproduction or networking permitted without license from IHS

Not for Resale

SECTION 13-1.7: STOPS, BUMPERS (BUFFERS), INTERLOCKS, SWEEPS, AND GUARDS

13-1.7.1 Stops

Mechanical means shall be provided for preventing the shuttle from becoming disengaged from its support(s).

13-1.7.2 Bumpers (Buffers) for S/R Machines and Aisle Transfer Cars

(a) S/R machines or aisle transfer cars shall be provided with bumpers (buffers) or other means capable of stopping the equipment including the rated load when traveling in either direction at 100% of the rated load speed without structural damage to the equipment.

(b) When an S/R machine or aisle transfer car contacts the end stops under the rated condition of speed or load, it shall not overturn.

(c) When more than one S/R machine or aisle transfer car is located and operated on the same runway, bumpers (buffers) shall be provided on their adjacent ends to meet the stopping requirements specified in para. 13-1.7.2(a).

(d) As an additional requirement for operator ridden S/R machines, bumpers (buffers) or other means capable of stopping the S/R machine (including the rated load) at a deceleration which should not exceed 16 ft/sec^2 (4.9 m/s^2) when travelling in either direction at 50% of the rated load speed shall be provided.

13-1.7.3 Runway Interlocks

(a) Interlocks shall prevent S/R machine travel between the aisle and aisle transfer car unless the tracks in the aisle and on the transfer car are aligned. Also, travel of the transfer car shall be prevented unless the S/R machine is completely on or off the transfer car.

(b) Means should be provided to limit the drop of the S/R machine frame to $\frac{1}{2}$ in. (13 mm) in case of wheel or axle breakage. Also, a means should be provided to limit the lateral movement in the event of wheel or axle breakage.

13-1.7.4 Runway Sweeps

Runway sweeps shall be provided in front of the runway wheels to provide clear passage for the wheels.

13-1.7.5 Guards for Hoisting Ropes or Chains

If it is possible for hoisting ropes to foul or chafe on adjacent parts of the S/R machine under normal operating conditions, guards shall be installed to minimize damage to the rope.

13-1.7.6 Guards for Moving Parts

(a) Exposed moving parts such as gears, set screws, projecting keys, ropes, chains, chain sprockets, and reciprocating components which might constitute a hazard under normal operating conditions shall be guarded.

(b) Each guard shall be capable of supporting without permanent deformation the weight of a 200 lb (90 kg) person unless the guard is located where it is not reasonable to expect a person to step during operation or maintenance.

SECTION 13-1.8: BRAKES

13-1.8.1 Brakes for Electric Hoists

(a) Each independent hoisting unit of an S/R machine shall be equipped with at least one holding brake, applied directly to the motor shaft or some part of the gear train.

(b) Each independent hoisting unit of an S/R machine, except worm-geared hoists, the angle of whose worm is such as to prevent the load from accelerating in the lowering direction, shall, in addition to a holding brake, be equipped with control braking means to control lowering speeds.

13-1.8.2 Holding Brakes

(a) Holding brakes for hoist motors shall have a rating not less than the following percentage of the full load hoisting torque at the point where the brake is applied:

(1) 125% when used with a control braking means other than mechanical

(2) 100% when used with a mechanical control braking means

(3) 100% each if two holding brakes are provided

(b) Holding brakes on hoists shall have thermal capacity for the frequency of operation required by the service.

(c) Holding brakes shall be applied automatically when power to the brake is removed.

(d) Holding brakes shall be provided with means to compensate for lining wear.

(e) The wearing surface of all brake wheels, drums, or disks shall be free of defects that interfere with the operation.

13-1.8.3 Control Braking Means

(a) An electrical control braking means (such as regenerative, dynamic, countertorque, or eddy current braking), a mechanical, or a hydraulic control braking means shall be capable of maintaining controlled travel or lowering speeds.

(b) The control braking means shall have thermal capacity for the frequency of operation required by the service.

13-1.8.4 Horizontal Travel and Shuttle Brakes

(a) This paragraph does not apply to horizontal shuttle drives which do not require a brake to stop motion or hold position.

Copyright ASME International
Provided by IHS under license with ASME
No reproduction or networking permitted without license from IHS
Not for Resale

(b) Brakes shall be provided for horizontal travel and shall be applied automatically when power to the brake is removed, but shall not prohibit the use of a drift point in the control circuit.

(c) Brakes shall be provided with means to compensate for lining wear.

(d) The wearing surfaces of all brake wheels, drums, or disks shall be free of defects that interfere with the operation.

(e) Holding brake torque shall be sufficient to decelerate the S/R machine from rated speed by at least 1 ft/sec^2 (0.3 m/s^2) and shall be capable of decelerating the S/R machine to a complete stop from rated speed.

(f) Brakes shall have thermal capacity for the frequency of operation required by the service.

SECTION 13-1.9: ELECTRICAL EQUIPMENT

13-1.9.1 General

(a) The provisions of this Section shall only apply to S/R machines, aisle transfer cars, and any load handling equipment which is part of or attached to S/R machines or aisle transfer cars.

(b) If resistor enclosures are provided, they shall be installed to prevent the accumulation of combustible matter.

(c) Wiring Outside of Control Enclosures on an S/R Machine or Aisle Transfer Car

(1) Conductors external to control cabinets shall be enclosed in raceways or be protected cable, such as but not limited to types ALS, CS, or MI cable, subject to the exception that contact conductors, which are fully insulated except as necessary to provide access for collector shoes, may be used to service moving portions of such machines.

(2) Rubber, thermoplastic, or synthetic polymer insulation may be used in accordance with Table 310-2(a) of ANSI/NFPA 70.

(3) The allowable ampacities of conductors shall be as shown in ANSI/NFPA 70, Table 610-14(a). For the ampacities of conductors between controllers and resistors, see ANSI/NFPA 70, Section 430-23. The ampacities of conductors within flexible cords or cables shall be in accordance with ANSI/NFPA 70, Article 400.

(4) Individual conductors run in conduits and raceways or within jacketed multiple conductor wire shall not be smaller than No. 16.

(5) Flexible cords or cables which are part of special sensors or appliances and that conform to Articles 400 and 725 of ANSI/NFPA 70 may be used in short runs outside conduits or raceways.

(d) Wiring Within Control Enclosures

(1) When an S/R machine carriage is operator ridden, the wiring shall be flame-retardant and moisture-resistant, and panel wiring to the main circuit resistors shall be suitable for a temperature of not less than 194°F (90°C).

(2) The allowable ampacity of conductors shall be as shown in ANSI/NFPA 70, Table 610-14(a), except for low energy power, low voltage power, and signal circuits conforming with the definitions and classifications of Article 725 of ANSI/NFPA 70.

(3) Minimum Conductor Size

(a) Wiring other than low energy power, low voltage power, and signal circuits conforming with the definitions and classifications of Article 725 of ANSI/NFPA 70 shall not be smaller than No. 16.

(b) Low energy power, low voltage power, and signal circuits may use any size wire consistent with the classification and limitations of Article 725 of ANSI/NFPA 70.

(e) Traveling cables used as flexible connections between the S/R machine carriage and the S/R machine main frame shall be of the types of cable listed for this service in ANSI/NFPA 70.

(1) Traveling cables shall be so suspended at the carriage and S/R machine frame end as to reduce the strain on the individual conductors. Cables with an unsupported length exceeding 100 ft (30 m) shall have supporting fillers and shall be suspended directly by the supporting fillers. Where nonmetallic fillers are used, the cables shall be suspended by looping the cables around the supports, or shall be suspended from the support by a means that automatically tightens around the cable when tension is increased.

(2) In hazardous locations, traveling cables shall be of a type designed for hazardous locations and shall be secured to explosion-proof cabinets as provided in Section 501-11 of ANSI/NFPA 70.

(3) Traveling cable supports shall be so located as to reduce the possibility of damage due to the cables coming in contact with fixed structures or loads within their area of possible movement. Where necessary, guards shall be provided to protect the cables against damage.

(f) Contact Conductor Installation

(1) The open access for collector shoes should be facing to the side or downward to minimize the chance either of contamination or of contact with metal objects.

(2) Collector shoes shall be either guarded or located in such a way that inadvertent contact with adjacent, exposed, and energized shoes is prevented, even when traversing a gap.

(3) Adjacent sections of conductor bar which are energized from separate power sources shall be separately protected and isolated.

(4) Collectors should be so constructed as to reduce to a minimum sparking between them and the contact conductors. When operated in rooms used for storage of combustible materials, the requirements of ANSI/NFPA 70, Section 503-13 shall apply.

Copyright ASME International
Provided by IHS under license with ASME
No reproduction or networking permitted without license from IHS

Not for Resale

(5) Conductors of the open type should not be used. However, if conductors of the open type are used, they shall be so located or so guarded that the operator in the cab and persons utilizing the means provided to enter or leave the cab, service platform, or aisle cannot come into contact with the conductors or energized portions of the associated collectors.

(g) Grounding

(1) All exposed metal parts of S/R machines or aisle transfer cars, including any pendant controls, shall be metallically joined together into a continuous electrical conductor so that the entire machine will be grounded on installation. Parts having metal to metal bearing surfaces shall be considered to be electrically connected to each other through the bearing surfaces for grounding purposes.

(2) A carriage grounding conductor shall be used. The carriages shall not be considered grounded by metal hoisting ropes or by metal chains, attached to or running over sheaves, drums, or sprockets.

(h) Insulated contact conductors may be used for signals, controls, or power to the S/R machine carriage. Associated collectors shall be so located and guarded as to be out of reach of an operator performing assigned work. All wiring on structure adjacent to the carriage shall be insulated for the maximum voltage to which the conductors are subjected.

(i) Where multiple conductor cable is used with a suspended pushbutton station, the station shall be supported so that the electrical conductors are relieved from strain. Pendant control stations shall be constructed to prevent electrical shock. The pushbutton enclosure shall be at ground potential, marked for identification of functions, and designed to minimize inadvertent operation.

(j) If the electrical system design permits conductors for operating control, power, signal, communication, and light circuits of 600 V or less to be run in the same traveling cable or raceway system, all conductors shall be insulated for the maximum voltage found in the cables or raceway system and all live parts of the equipment shall be insulated from the ground for this maximum voltage.

13-1.9.2 Equipment

(a) Electrical equipment shall be so located or enclosed that live parts will not be exposed to accidental contact under normal operating conditions.

(b) Live parts of electrical equipment shall be protected from direct exposure to grease, oil, and moisture, and should be protected from dirt.

(c) Guards for live parts, if provided, shall be constructed or located in such a way that they cannot be inadvertently deformed as to make contact with the live parts.

13-1.9.3 Power Disconnect

(a) An aisle disconnecting means shall be provided between the power supply and the aisle contact conductor or traveling cable. Such disconnecting means shall consist of a motor circuit switch or circuit breaker. This disconnecting means shall be accessible and operable, arranged to be locked in the open position, and open all ungrounded power supply circuits simultaneously.

(b) A disconnecting means for the power supply to an aisle transfer car shall be provided as described in para. 13-1.9.3(a).

(c) A disconnecting means for an S/R machine or an aisle transfer car shall be provided in the leads from contact collector shoes or any other feeder to the S/R machine or aisle transfer car. This disconnecting means shall be accessible, arranged to be locked in the open position, and open all ungrounded power supply circuits simultaneously. On an operator ridden machine or aisle transfer car, a separate means to open the power supply to all the drive motors shall be provided at the operator's station, when the mainline disconnecting means cannot be placed within reach of the operator.

13-1.9.4 Limit Sensors

(a) Limit sensors shall be provided, connected, and actuated to shut down any drive whose motion passes the extremity of designed travel.

(b) Limit sensors may be unsed on multispeed or adjustable speed drives to reduce speed before actuating the extreme travel sensor at the end of travel.

13-1.9.5 Control Voltages

The voltage at pendant controls, manual operators, or pushbutton stations shall not exceed 150 V AC or 300 V DC.

13-1.9.6 Controls for Operator Ridden Operation

Unless the operator's cab is constructed in a way that prevents the extension of arms and legs into a storage aisle while the machine is in motion, the operating switches shall be arranged so that both hands and both feet are required to be in specified positions in order to permit horizontal motion of the S/R machine as a whole, or vertical motion of the occupied operator ridden carriage. Where such motions are under automatic control, control sequences may proceed only when the switches are all activated by the operator. If, during an automatic sequence, any of the above switches becomes nonactivated, all S/R machine drives shall stop. The control sequence shall revert to a controlled start point status. Automatic operating sequences shall not be resumed until there has been a time delay after the reactivation of all switches so as to prevent a chattering type of motion which might cause structural damage or shift loads.

Copyright ASME International
Provided by IHS under license with ASME
No reproduction or networking permitted without license from IHS
Not for Resale

13-1.9.7 Warning Devices

(a) Visual or audible warning devices shall be located on any S/R machine or aisle transfer car within an automatic system and shall be activated whenever the S/R machine as a whole makes any horizontal movement. Such devices shall be located where they can be seen by persons in a machine aisle or in work stations into which mobile machines may move.

(b) Personnel operating manned remote control S/R machines or aisle transfer cars performing any manned hoist operation shall have a means of alerting others to secure aid in case of emergency or malfunction.

13-1.9.8 Fault Conditions

(a) The following conditions shall be classified as S/R machine faults:

(1) travel beyond set limits in any axis of motion where such motion is possible

(2) loss of support of an S/R machine carriage

(3) activation of any emergency stop switch

(4) sensing any electrical overload or power failure

(5) malfunction of storage or retrieval of a load that results in the load or shuttle protruding into the design clearances

(b) The following conditions shall be classified as aisle transfer car faults:

(1) travel beyond set limits

(2) activation of any emergency stop switch

(3) sensing any electrical overload or power failure

(4) failure to satisfy runway interlock conditions as described in para. 13-1.7.3

(c) Fault conditions, however sensed, shall cause applicable drive motors to be disconnected from their power source by opening contactors.

(d) Fault sensors should be designed so that component failure or power loss results in a fault condition being sensed.

(e) If there is any reason for personnel to be in the machine aisle, emergency stop actuators shall be accessible to such personnel. Actuating emergency stop shall result in a fault condition.

(f) Correcting the fault shall not cause the automatic cycling to be reestablished without performing a specific starting procedure.

13-1.9.9 Automatic and Remote Operations

(a) Automatic S/R machines and aisle transfer cars shall be designed so that the operation of all motions is discontinued if the automatic sequence control becomes ineffective. The completion of the last command is permissible if power is available.

(b) Remote operated S/R machines and aisle transfer cars that require continuity of the remote signal in order to operate shall function in such a way that if the control signal for any motion becomes ineffective, the motion shall stop.

(c) Means shall be provided to prevent the transmission of remote command signals to the S/R machine and aisle transfer car. Means shall also be provided on the S/R machine and aisle transfer car to prevent responding to the remote command signals.

(d) When controls are provided for the manual operation of automatic or remote S/R machines or aisle transfer cars, all sensors of fault conditions as defined in para. 13-1.9.8 shall remain operational during the manual mode of operation. Additional controls for the purpose of maintenance operations and/or clearing malfunctions may be provided to override the fault conditions.

SECTION 13-1.10: HOISTING EQUIPMENT

13-1.10.1 Sheaves

(a) Sheave grooves shall be smooth and free from surface defects which could cause rope damage. The cross-sectional radius at the bottom of the groove should form a close-fitting saddle for the size of rope used and the sides of the groove should be tapered outwardly to facilitate entrance of the rope into the groove. Flange corners should be rounded and the rims should run true about the axis of rotation.

(b) Sheaves carrying ropes which can be momentarily unloaded shall be provided with close-fitting guards or other devices to guide the rope back into the groove when the load is reapplied.

(c) Means shall be provided to minimize chafing of the ropes during normal operation.

(d) All running sheaves shall be equipped with means for lubrication. Permanently lubricated, sealed, or shielded bearings shall be acceptable.

(e) The pitch diameter of running sheaves should not be less than 20 times the rope diameter.

(f) The pitch diameter of nonrunning sheaves should not be less than 18 times the rope diameter.

(g) Sheave pitch diameter, in relation to rope diameter, will have an effect on the wear of the rope. Therefore, rope inspection as given in para. 13-2.4.1 shall be followed.

13-1.10.2 Drums

Rope drums shall be grooved except when the S/R machine is provided by the manufacturer for a special application. The grooves shall be free from surface defects which could cause rope damage. The cross-sectional radius at the bottom of the groove should form a close-fitting saddle for the size of rope used.

13-1.10.3 Ropes

(a) The hoisting ropes shall be of a recommended construction for S/R machine service. The rated load plus the carriage weight divided by the number of parts

Copyright ASME International
Provided by IHS under license with ASME
No reproduction or networking permitted without license from IHS

Not for Resale

of rope shall not exceed 20% of the nominal breaking strength of the rope.

(b) Socketing shall be done in the manner specified by the manufacturer of the socket assembly or the rope manufacturer.

(c) Rope shall be secured to the drum as follows:

(1) no less than two wraps of rope shall remain on the drum when the carriage is in its extreme low position.

(2) the rope end shall be anchored by a clamp attached to the drum, or by a socket arrangement specified by the S/R machine or rope manufacturer. The rope clamps shall be tightened evenly to the manufacturer's recommended torque.

(d) Eye splices shall be made by a qualified person. Rope thimbles should be used in the eyes.

(e) Wire rope clips shall be drop-forged steel of the single saddle (U-bolt) or double saddle type clip. Malleable cast iron clips shall not be used. For spacing, number of clips, and torque values, refer to the clip manufacturer's recommendation. Wire rope clips attached with U-bolts shall have the U-bolt over the dead end of the rope and the live rope resting in the clip saddle. Clips shall be tightened evenly to the recommended torque. After the initial load is applied to the rope, the clip nuts shall be retightened to the recommended torque to compensate for any decrease in rope diameter caused by the load. Rope clip nuts should be retightened periodically to compensate for any further decrease in rope diameter during usage.

(f) Swaged or compressed fittings shall be applied as recommended by the fitting, the rope, or the S/R machine manufacturer.

(g) Wherever exposed to ambient temperatures above 180°F (82°C), rope having an independent wire-rope or wire-strand core, or other temperature-resistant core shall be used.

(h) Replacement rope shall be the same size, grade, and construction as the original rope furnished by the S/R machine manufacturer, unless otherwise recommended by a wire rope or S/R machine manufacturer or a qualified person, based on the actual working condition requirements.

13-1.10.4 Sprockets, Pocket Wheels, and Load Chain

(a) Sprocket teeth or chain pockets shall be free from surface defects which could cause chain damage.

(b) Sprockets or pocket wheels carrying chain which can be momentarily unloaded shall be provided with close-fitting guards or other suitable devices to guide the chain back into the teeth or pockets when the load is applied again.

(c) All running chain, sprockets, or pocket wheels should be accessible for lubrication. Permanently lubricated, sealed, or shielded bearings are acceptable.

(d) Provisions shall be made to release the chain freely from the sprocket or pocket wheel to prevent jamming.

13-1.10.5 Hoisting Chains

(a) The rated load plus the carriage weight divided by the number of parts of chain supporting the loads shall not exceed 15% of the published ultimate strength of the chain.

(b) The chain anchor shall be designed to develop the ultimate strength of the chain or carry seven times the rated load, whichever is less.

(c) Replacement chain shall be the same size, grade, and construction as the original chain furnished by the S/R machine manufacturer, unless otherwise recommended by a chain or S/R machine manufacturer or a qualified person, based on the actual working condition requirements.

13-1.10.6 Equalizers

If a load is supported by more than one part of rope or chain at each end of the carriage, the tension in the parts shall be equalized.

13-1.10.7 Carriage Free Fall Stops (Catch, Brakes)

(a) Carriage-mounted cabs suspended by rope or chain shall be equipped with mechanically applied carriage free fall stops which are activated by slack or the failure of rope or chain, and are capable of stopping and sustaining the carriage with its full load.

(b) Carriages suspended by rope or chain should be equipped with mechanically applied carriage free fall stops.

(c) Slack or failure of the rope or chain shall result in removing power from the motor and setting of the brake.

(d) Carriage free fall stop(s) should be released by raising the carriage by the primary suspension means.

13-1.10.8 Overspeed Device

(a) All S/R machines having carriage-mounted cabs shall be equipped with an overspeed device on the lowering mode of the hoist motion.

(b) The overspeed device shall operate independently from all other power, drive, and electrical systems.

(c) The overspeed device shall cause controlled descent of no more than 200% of the rated lowering speed or cause free fall stops to be engaged to stop the carriage when overspeed occurs in the lowering direction.

(d) The overspeed device shall operate whenever the lowering rate exceeds 100 ft/min (0.5 m/s) or 150% of the rated lowering speed, whichever is greater.

(e) A switch shall be provided on the overspeed device and operated by the overspeed action of the device. This switch shall, when operated, remove power from the hoisting motor and brake before or at the time

--`,,`-`-`,,`,,`,`,,`---

Copyright ASME International
Provided by IHS under license with ASME
No reproduction or networking permitted without license from IHS

Not for Resale

of application of the free fall stops, brakes, or catches. Switches used to perform this function shall be positively opened, and shall not close until the free fall stops or sensors are reset to the normal condition.

(f) Each overspeed device shall be marked in a legible and durable manner with letters and figures not less than $\frac{1}{4}$ in. (6 mm) in height indicating the speed at which the overspeed device is set to operate.

(g) Overspeed devices shall have their means of speed adjustment sealed after the test. Seals shall be of a type which will prevent the readjustment of the overspeed device tripping speed without breaking the seal.

SECTION 13-1.11: DOCUMENTATION

Maintenance and operating manuals and drawings necessary for operations and maintenance shall be provided by the manufacturer of the equipment. Where existing equipment is rebuilt or remanufactured, the provision of such documentation shall be the responsibility of the party performing the remanufacturing or rebuilding.

Copyright ASME International
Provided by IHS under license with ASME
No reproduction or networking permitted without license from IHS

Not for Resale

Chapter 13-2
Inspection, Testing, and Maintenance

SECTION 13-2.1: INSPECTION

13-2.1.1 Inspection Classification

(a) Initial Inspection. Prior to initial use, all new, reinstalled, altered, or modified S/R machines or aisle transfer cars shall be inspected by a designated person to verify compliance with the provision of this volume.

(b) Inspection procedure for S/R machines or aisle transfer cars in regular service is divided into two general classifications based upon the intervals at which inspection should be performed. The intervals in turn are dependent upon the nature of the critical components of the S/R machines or aisle transfer cars and the degree of their exposure to wear, deterioration, or malfunction. The two general classifications are herein designated as *frequent* and *periodic* with respective intervals between inspection as defined below.

(1) frequent inspection: visual examinations by the operator or other designated personnel with records not required:

(a) normal service: monthly

(b) heavy service: weekly to monthly

(c) severe service: daily to weekly

(d) special or infrequent service: as recommended by a qualified individual before and after each occurrence

(2) periodic inspection: visual inspections by a designated person making records of apparent external conditions to provide the basis for a continuing evaluation:

(a) normal service (equipment in place): yearly

(b) heavy service (equipment in place): yearly

(c) severe service [as in (b)]: quarterly

(d) special or infrequent service: as authorized by a qualified person before the first such occurrence and as directed by the qualified person for any subsequent occurrence

13-2.1.2 Frequent Inspection

Items such as the following shall be inspected for defects and damage at intervals as defined in para. 13-2.1.1(b)(1), including observations during operation for any defects and damage which might appear between regular inspections. A designated person shall determine whether any defects or damage constitutes a hazard or will require more frequent inspection.

(a) Automatic S/R Machines

(1) All functional operating mechanisms and sensors shall be inspected for misadjustment interfering with proper operation.

(2) All extreme travel limit sensors shall be checked. Each motion should be inched into its limit sensor or run in at slow speeds. Care shall be exercised.

(3) Lines, tanks, valves, pumps, and other parts of air or hydraulic systems shall be inspected for leakage.

(4) Warning devices shall be checked for proper operation.

(5) Other items as detailed in the supplier's maintenance manual shall be considered.

(b) Cab-Operated S/R Machines and Aisle Transfer Cars. On cab-operated S/R machines and aisle transfer cars, the following shall be checked, prior to each shift or as defined below:

(1) all functional operating controls shall be checked for proper operation.

(2) extreme hoist and travel limit sensors shall be tested. The S/R machine should be inched into its limit sensor or run in at slow speed to verify proper operation. Care shall be exercised.

(3) lines, tanks, valves, pumps, and other parts of air or hydraulic systems shall be inspected for leakage, as defined in para. 13-2.1.1(b)(1).

(4) warning devices shall be checked for proper operation.

(5) other items as detailed in the supplier's maintenance manual shall be considered.

13-2.1.3 Periodic Inspection

Complete inspections of the S/R machines shall be performed at intervals as defined in para. 13-2.1.1(b)(2). Any deficiencies shall be examined and determination made as to whether they constitute a hazard. These inspections shall include the requirements of para. 13-2.1.2 and, in addition, items such as the following:

(a) deformed, cracked, or corroded members

(b) loose bolts, rivets, and other fasteners

(c) cracked or worn sprockets, pocket wheels, sheaves, and drums

(d) worn, cracked, or distorted parts such as pins, bearings, shafts, gears, rollers, locking, and clamping devices

(e) worn brake system parts, linings, pawls, and ratchets

(f) worn chain drive sprockets, pocket wheels, and chain stretch

Copyright ASME International
Provided by IHS under license with ASME
No reproduction or networking permitted without license from IHS
Not for Resale

(g) electrical apparatus, such as an emergency stop button, shall be functionally tested

(h) overspeed sensors, loss-of-support detection mechanisms, and stopping mechanisms shall be functionally tested

(i) other items as detailed in the supplier's maintenance manual shall be considered

13-2.1.4 S/R Machines or Aisle Transfer Cars Not in Regular Use

An S/R machine or aisle transfer car which has been idle for a period of 1 month or more shall be given an inspection conforming to the requirements of paras. 13-2.1.2 and 13-2.4.1(b) before being placed into service.

13-2.1.5 Inspection Records

Dated inspection reports or comparable records shall be made on critical items such as drives, sheaves, chains, ropes, sprockets, shuttles, and safety devices [refer to para. 13-2.1.1(b)(2)]. Records should be available to appointed personnel.

SECTION 13-2.2: TESTING

13-2.2.1 Operational Tests

(a) Prior to initial use, all new, reinstalled, altered, extensively repaired, or modified S/R machines and aisle transfer cars shall be tested by a qualified person to insure compliance with this Standard including the following functions:

(1) lifting and lowering

(2) horizontal travel

(3) shuttle operation

(4) limit sensors, locking, and safety devices

(b) The trip setting of the hoist limit sensors shall be determined by tests with an empty carriage traveling at normal speed. The actuating mechanism of the limit sensor shall be located so that it will trip the sensor, under all conditions, in sufficient time to prevent damage to the carriage or hoisting mechanism.

13-2.2.2 Rated Load Test

Prior to initial use, all new, extensively repaired, and altered S/R machines should be tested and inspected in a manual mode by or under the direction of an appointed or authorized person and a written report furnished by such person confirming the load rating of the S/R machine. The load rating should not be more than 80% of the maximum load sustained during the test. Test loads shall not be more than 125% of the rated load unless otherwise recommended by the manufacturer. The test reports shall be available to appointed personnel.

SECTION 13-2.3: MAINTENANCE

13-2.3.1 Preventive Maintenance

(a) A preventive maintenance program should be established and be based on the manufacturer's or qualified person's recommendation. Dated records should be available to appointed personnel.

(b) Replacement parts shall be at least equal to the original manufacturer's specifications.

13-2.3.2 Maintenance Procedure

(a) Before adjustments and repairs are started on an S/R machine, aisle transfer car, runways, machine aisle conductors, or aisle transfer conductors, the following precautions shall be taken as applicable:

(1) the S/R machine or aisle transfer car to be repaired shall be run to a location where it will cause the least interference with other S/R machines or aisle transfer cars and operations in the area.

(2) transmission of remote command signals to the S/R machine and aisle transfer car shall be prevented. The S/R machine shall be prevented from responding to any remote command signals.

(3) main power disconnect shall be deenergized and locked, tagged, or flagged in the deenergized position unless power is required for maintenance to be performed.

(4) warning or out of order signs shall be placed on the machine where readily visible.

(5) where other S/R machines or aisle transfer cars are in operation on the same runway, rail stops or other suitable means shall be provided to prevent interference with the idle S/R machine or aisle transfer car.

(b) After adjustments and repairs have been made, the S/R machine or aisle transfer car shall not be returned to service until all guards have been reinstalled, safety devices reactivated, and maintenance equipment removed.

13-2.3.3 Adjustments and Repairs

(a) Any hazardous conditions disclosed by the inspection requirements of Section 13-2.1 shall be corrected before normal operation of the S/R machine or aisle transfer car is resumed. Adjustments and repairs shall be done only by designated personnel.

(b) Adjustments, repairs, and replacements shall be made according to the manufacturer's or a qualified person's recommendations. Special attention should be given to the following:

(1) all functional operating mechanisms

(2) limit sensors and safety devices

(3) control systems

(4) brakes

(5) all critical parts which are cracked, broken, bent, or excessively worn

Copyright ASME International
Provided by IHS under license with ASME
No reproduction or networking permitted without license from IHS

Not for Resale

(6) pitted or burned electrical contacts should be corrected only by replacement and in sets

(c) In control stations, function and cautionary labels shall be kept legible.

(d) Before repairs involving load bearing members are made, proper identification of the types of material shall be made and appropriate repair procedures shall be followed.

13-2.3.4 Lubrication

(a) All moving parts of the S/R machine or aisle transfer car for which lubrication is specified, including rope and chain, should be regularly lubricated. Lubricating systems should be checked for proper delivery of lubricant. Care should be taken to follow the manufacturer's recommendations concerning the points and frequency of lubrication, maintenance of lubricant levels, and types of lubricant to be used.

(b) Machinery shall be stationary and electrically disconnected as in paras. 13-2.3.2(a)(1) through (a)(4) while lubricants are being applied unless the machine is equipped for automatic or remote lubrication.

SECTION 13-2.4: ROPE INSPECTION, REPLACEMENT, AND MAINTENANCE

13-2.4.1 Rope Inspection

(a) Frequent Inspection

(1) All ropes should be visually inspected by the operator or other designated person at the start of each shift. These visual observations should be concerned with discovering damage, such as listed below, which may be a hazard:

(a) distortion of the rope such as kinking, crushing, unstranding, birdcaging, main strand displacement, or core protrusion

(b) general corrosion

(c) broken or cut strands

(d) number, distribution, and type of visible broken wires [see paras. 13-2.4.2(b)(1) and (b)(2) for further guidance]

(2) When such damage is discovered, the rope shall either be removed from service or given an inspection as detailed in para. 13-2.4.1(b).

(b) Periodic Inspection

(1) The inspection frequency shall be determined by a qualified person and shall be based on such factors as expected rope life as determined by experience on the particular installation or similar installations, severity of environment, percentage of capacity lifts, frequency rates of operation, and exposure to shock loads. Inspections need not be at equal calendar intervals and should be more frequent as the rope approaches the end of its useful life.

(2) Periodic inspections shall be performed by a designated person. This inspection shall cover the entire length of rope. The individual outer wires in the strands of the rope shall be visible to this person during the inspection. Any deterioration resulting in appreciable loss of original strength, such as described below, shall be noted and determination shall be made as to whether further use of the rope would constitute a hazard:

(a) points listed in para. 13-2.4.1(a)

(b) reduction of rope diameter below nominal diameter due to loss of core support, internal or external corrosion, or wear of outside wires

(c) severely corroded or broken wires at end connections

(d) severely corroded, cracked, bent, worn, or improperly applied end connections

(3) Special care should be taken when inspecting sections of rapid deterioration such as the following:

(a) sections in contact with saddles, equalizer sheaves, or other sheaves where rope travel is limited

(b) sections of the rope at or near terminal ends where corroded or broken wires may protrude

(c) sections subject to reverse bends

(d) sections of rope which are normally hidden during visual inspection, such as parts passing over sheaves

(c) In order to establish data as a basis of judging the proper time for replacement, a continuing inspection record should be maintained. This record should cover points of deterioration listed.

13-2.4.2 Rope Replacement

(a) No precise rules can be given for determination of the exact time for rope replacement, since many variable factors are involved. Once a rope reaches any one of the specified removal criteria, it may be allowed to operate to the end of the work shift, based on the judgment of a qualified person. The rope shall be replaced after that work shift, at the end of the day, or at the latest time prior to the equipment being used by the next work shift.

(b) Removal criteria for rope replacement shall be as follows:

(1) in running ropes, 12 randomly distributed broken wires in one lay or 4 broken wires in one strand in one lay

(2) one outer wire broken at the contact point with the core of the rope which has worked its way out of the rope structure and protrudes or loops out from the rope structure

(3) wear of one-third the original diameter of outside individual wires

(4) kinking, crushing, birdcaging, or any other damage resulting in the distortion of the rope structure

(5) evidence of heat damage from any cause

(6) reductions from the nominal diameter greater than those shown below:

Copyright ASME International
Provided by IHS under license with ASME
No reproduction or networking permitted without license from IHS
Not for Resale

Rope Diameter	Maximum Allowable Reduction From Nominal Diameter
To 5/16 in. (8 mm)	1/64 in. (0.4 mm)
Over 5/16 in. to 1/2 in. (13 mm)	1/32 in (0.8 mm)
Over 1/2 in. to 3/4 in. (19 mm)	3/64 in. (1.2 mm)
Over 3/4 in. to 1 1/8 in. (29 mm)	1/16 in. (1.6 mm)
Over 1 1/8 in. to 1 1/2 in. (38 mm)	3/32 in. (2.4 mm)

(c) Broken wire removal criteria cited in this volume apply to wire rope operating on steel sheaves and drums. The user shall contact the sheave, drum, or S/R machine manufacturer, or a qualified person, for broken wire removal criteria for wire ropes operating on sheaves and drums made of material other than steel.

(d) Attention shall be given to end connections. Upon development of two broken wires adjacent to a socketed end connection, the rope should be resocketed or replaced. Resocketing shall not be attempted if the resulting rope length will be insufficient for proper operation.

(e) Replacement rope and connections shall have a strength rating at least as great as the original rope and connections furnished by the S/R machine manufacturer. Any deviation from the original size, grade, or construction shall be specified by a rope manufacturer, the S/R machine manufacturer, or a qualified person.

13-2.4.3 Rope Maintenance

(a) Rope should be stored to prevent damage or deterioration.

(b) Unreeling or uncoiling of rope shall be done as recommended by the rope manufacturer and with care to avoid kinking or inducing a twist.

(c) Before cutting a rope, means shall be used to prevent unlaying of the strands.

(d) During installation, care should be observed to avoid dragging the rope in dirt or around objects which will scrape, nick, crush, or induce sharp bends.

(e) Rope should be maintained in a well-lubricated condition. Lubricant applied as part of a maintenance program shall be compatible with the original lubricant. Lubricant applied shall be of the type which does not hinder visual inspection. Those sections of rope which are located over sheaves or otherwise hidden during inspection and maintenance procedures require special attention when lubricating rope. The object of rope lubrication is to reduce intenal friction and to prevent corrosion.

SECTION 13-2.5: ROLLER CHAIN AND LEAF CHAIN INSPECTION, REPLACEMENT, AND MAINTENANCE

13-2.5.1 Roller Chain and Leaf Chain Inspection

An inspection of hoist chains shall be made at least annually and a dated report of chain condition kept on file. All inspections shall be performed by a designated person. Any deterioration resulting in appreciable loss of original strength, such as described below, shall be carefully noted and determination made as to whether further use of the chain would constitute a hazard.

(a) Check for wear on the sides of the sprocket teeth and on the link plates (for roller chains) or between the link plates and the inside of the sheave flanges (for leaf chains), either of which would indicate misalignment.

(b) Check for wear on the working faces of the sprocket teeth (roller chain) or face of the sheave wheel (leaf chain). As the drive runs in, these faces should develop a bright, polished appearance. Scratches, grooves, or visible changes in form are signs of trouble, probably caused by sluggish roller action due to lubrication failure. Check the pins and joints for rusting, discoloration, grooving, or galling, indicating a lack of proper lubrication.

(c) Check the actual length of a section of chain when under at least 5% rated load tension, and compare it to the nominal length when new. Any chain elongation in excess of 3% will indicate that the chain itself, and possibly the sprockets or sheave wheels, should be replaced.

(d) Check the chain along with the sprockets or sheave wheels for accumulations of dirt or foreign materials, so as not to inhibit proper lubrication and operation.

13-2.5.2 Roller Chain and Leaf Chain Replacement

(a) No precise rules can be given for determination of the exact time for replacement of chain, since many variable factors are involved. Continued use depends largely upon judgment by a designated person in evaluating remaining strength in a used chain after allowance for deterioration disclosed by inspection. Continued chain operation depends upon this remaining strength.

(b) Conditions such as the following should be a reason for questioning continued use of the chain or increasing the frequency of inspection:

(1) any increase of more than 3% in any given length of a piece of chain under specified test tension, as compared to the nominal length of the chain under the same tension when new

(2) any excessive wear, galling, or other mechanical damage to the chain components

(3) any damage from kinking or twisting that results in the distortion of the chain structure

(4) any excessive signs of rust, discoloration, or wear caused by improper lubrication

(c) Do not insert a new link in a chain that has been appreciably elongated by wear.

(d) Do not install a new chain on badly worn sprockets or sheaves.

(e) Clearances around the chain and other parts should be checked.

(f) In order to establish data as a basis for judging the proper time for replacement, a continuous inspection

Copyright ASME International
Provided by IHS under license with ASME
No reproduction or networking permitted without license from IHS
Not for Resale

record shall be maintained. This record shall cover the points of deterioration listed in para. 13-2.5.1.

13-2.5.3 Roller Chain and Leaf Chain Maintenance

(a) Chain should be stored to prevent damage or deterioration from moisture or mechanical injury.

(b) During installation, care should be observed to avoid dragging the chain in dirt or around objects which will scrape, twist, foul, or damage the chain in any way.

(c) Chain should be maintained in a well-lubricated condition. It is important that the lubricant applied as part of a maintenance program be compatible with the original lubricant used and have sufficiently low viscosity to reach the internal surfaces, sufficient body to maintain the lubricating film under the bearing pressures, be free from corrosive ingredients, and have the ability to maintain lubricating qualities under conditions of temperature, moisture, etc. The object of proper chain lubrication is to reduce internal friction and to prevent corrosion.

(d) Chain lubrication should follow a periodic schedule based on duty cycle and chain speed. The chain should be inspected at regular intervals to ensure that the frequency of lubrication is sufficient for the application.

SECTION 13-2.6: WELDED LINK CHAIN INSPECTION, REPLACEMENT, AND MAINTENANCE

13-2.6.1 Welded Link Chain Inspection

(a) Frequent Inspection. Chain should be clean to not pose the possibility of carrying deposits into the pocket wheel and sprockets. Examine visually for gouges, nicks, weld splatter, corrosion, and distorted links. If abnormal wear is observed or if evidence of stretching is apparent, the chain should be measured according to the S/R machine manufacturer's instructions. If the instructions are not available, proceed as in para. 13-2.6.1(b)(2).

(b) Periodic Inspection

(1) Same as para. 13-2.6.1(a), except records are kept.

(2) Wear Measurement

(a) Select a section of unworn, unstretched length of chain (e.g., at the slack end) that is under at least slight tension. Using a caliper-type gage, measure the outside of any convenient number of links.

(b) Measure the same number of links in the used section under similar conditions of slight load and calculate the percentage increase in length.

(3) Check pocket wheel and sheave wheels for accumulations of dirt or foreign materials, so as not to inhibit proper operation.

(4) Check chain attachment for nicks, gouges, corrosion, and distortion.

13-2.6.2 Welded Link Chain Replacement

(a) If the used chain exceeds the hoist manufacturer's recommended length or, in the absence of such a recommendation, if the gaged section of used chain is $2\frac{1}{2}\%$ longer than the unused chain section, replace the chain.

(b) The existence of gouges, nicks, corrosion, weld splatter, or distorted links is reason for questioning chain safety and considering chain replacement. Safety in this respect depends largely upon the use of good judgment by an appointed or designated person in evaluating the degree of deficiency.

(c) Replacement chain shall be the same size, grade, and construction as the original chain furnished by the S/R machine manufacturer, unless otherwise recommended by the S/R machine manufacturer due to actual working conditions.

(d) Load chain links that pass over the load sprocket on edge (alternate to those that lie flat in the pockets) should be installed with the welds away from the center of the sprocket. This precaution is not required on idler sprockets that change the direction but not the tension in the chain.

(e) The chain shall be installed without any twist.

(f) When chain is replaced, disassemble and inspect the mating parts (chain, attachments, sprockets, guides, stripper) for wear and replace if necessary.

13-2.6.3 Welded Link Chain Maintenance

(a) Cleaning. Load chain should be kept clean and free from rust and from any coating deposit that will build up, change its dimensions, reduce flexibility, or form an adhering deposit on the pocket wheels over which it rides. The cleaning process shall not damage these chains.

(b) Lubrication. Load chain articulates slowly under high interlink bearing pressures and should be lubricated as specified by the S/R machine manufacturer. In the absence of a recommendation, use anti-weld or EP-type lubricant applied sparingly but frequently since it dissipates during use.

Copyright ASME International
Provided by IHS under license with ASME
No reproduction or networking permitted without license from IHS
Not for Resale

Chapter 13-3
Operation

SECTION 13-3.1: QUALIFICATIONS FOR AND CONDUCT OF OPERATORS

13-3.1.1 Operators of Operator Ridden S/R Machines or Aisle Transfer Cars

(a) S/R machines or aisle transfer cars shall be operated only by the following qualified personnel:

(1) designated persons

(2) trainees under the direct supervision of a designated person

(3) maintenance and test personnel, when it is necessary in the performance of their duties

(4) inspectors (S/R machines or aisle transfer cars)

(b) No one, other than personnel specified in para. 13-3.1.1(a), shall enter an S/R machine cab with the exception of persons such as maintenance personnel and supervisors, whose duties require them to do so, and then only in the performance of their duties and with the knowledge of the operator or other appointed person.

13-3.1.2 Qualifications for Operators of Operator Ridden S/R Machines or Aisle Transfer Cars

(a) Operators shall be required by the employer to pass a written or oral examination and a practical operating examination unless able to furnish satisfactory evidence of qualifications and experience. Qualification shall be limited to the specific type of equipment for which they are being examined.

(b) Operators and operator trainees shall meet the following physical qualifications:

(1) vision of at least 20/30 Snellen in one eye and 20/50 in the other, with or without corrective lenses

(2) ability to distinguish colors regardless of position of colors, if color differentiation is required for the operation

(3) adequate hearing, with or without a hearing aid, for the specific operation

(4) sufficient strength, endurance, agility, coordination, and speed of reaction to meet the demands of equipment operation

(c) Evidence of physical defects, or emotional instability which could render the operator a hazard to the operator or others, or which in the opinion of the examiner could interfere with the operator's safe performance may be sufficient cause for disqualification. In such cases, specialized clinical or medical judgments and tests may be required.

(d) Evidence that an operator is subject to seizures or loss of physical control shall be sufficient reason for his disqualification. Specialized medical tests may be required to determine these conditions.

(e) Operator and operator trainees should have normal depth perception, field of vision, reaction time, manual dexterity, coordination, and no tendencies to dizziness or similar undesirable characteristics.

13-3.1.3 Operators and Qualifications for Operators of Remote-Operated S/R Machines and Aisle Transfer Cars

The use of remote control equipment involves such a wide variety of service requirements and conditions that each installation should be carefully analyzed and each operation should be reviewed at least monthly for the first 6 months of the operation to determine whether paras. 13-3.1.1 and 13-3.1.2 should apply, or a special requirement should be made.

13-3.1.4 Conduct of Operators

(a) The operator shall not engage in any practice which will divert the operator's attention while actually engaged in operating the S/R machine or aisle transfer car.

(b) When physically or otherwise unfit, an operator shall not engage in the operation of the equipment.

(c) Each operator shall be responsible for those operations under the operator's direct control. Whenever there is any doubt as to safety, the operator shall consult with the supervisor before handling the loads.

(d) The operator shall not close the main line disconnect device until certain that no person is on or adjacent to the machine. If there is a warning sign or lock on the device, it shall not be energized until the sign or lock is removed by the person who placed it or a designated person.

(e) The operator shall be familiar with the equipment and its proper care. If adjustments or repairs are necessary, or any defects are known, the operator shall report the same promptly to the appointed person who shall be responsible for the safe operation and maintenance repairs of the machine. The operator shall also notify the next operator of any remaining uncorrected defects upon changing shifts.

(f) Before closing the main line disconnect device, the operator shall see to it that all established startup procedures are followed.

Copyright ASME International
Provided by IHS under license with ASME
No reproduction or networking permitted without license from IHS

Not for Resale

(g) If power goes off during operation, the operator shall immediately implement all shutdown procedures.

(h) Contacts with runway stops or other machines shall be made with extreme caution. The operator shall do so with particular care for the safety of persons on the other machines.

(i) Before any maintenance or inspection work on S/R machines or aisle transfer cars is performed, the operator shall follow the procedures specified in para. 13-2.3.2.

(j) All controllers shall be tested by the operator before beginning a new shift. If any controls do not operate properly, they should be adjusted or repaired before operations are begun.

(k) Persons boarding or leaving the machine should do so only at authorized locations and designated boarding entrances.

SECTION 13-3.2: HANDLING THE LOAD

13-3.2.1 Size of Load

The S/R machine shall not be loaded with a load whose dimensions or weight exceed the design load except for rated load test purposes as provided in para. 13-2.2.2.

13-3.2.2 Supporting the Load

(a) The pallet or container, if used, shall be in good condition and within the tolerances of the design load.

(b) The profile of the load and pallet shall be within the tolerances of the design load.

(c) At input, the loads shall be positioned within the tolerances as specified by the manufacturer.

13-3.2.3 Moving the Load

(a) The operator of an operator ridden S/R machine shall see that the load is properly aligned on the carriage.

(b) The load sizing station(s), if provided, for an automatic S/R machine shall determine that the load is dimensionally acceptable.

(c) The user of the automatic S/R machine system shall make provisions to assure the stability of the load.

(d) The operator shall lift, lower, or travel while a person is on the carriage outside the cab only when necessary to perform maintenance, inspection, or inventory checks and only under the following conditions:

(1) any person on the carriage shall be secured with fall protection equipment.

(2) a flat, slip-resistant surface upon which to stand shall be provided either on the carriage or on a portable platform/surface attached to the carriage.

(3) travel shall be controlled by manually operated, return to off position controllers.

(4) the controls shall be operated by an experienced operator.

(5) a means of communication shall be provided between the operator and the person on the carriage.

(6) a means of "emergency stop" shall be available to the person on the carriage.

(7) some type of hand hold(s) shall be available to the person(s) on the carriage.

(e) The operator shall avoid carrying loads over people.

SECTION 13-3.3: MISCELLANEOUS

13-3.3.1 Using Ladders

(a) Hands shall be free from encumbrances while personnel are using ladders.

(b) Articles which are too large to be carried in pockets or tool belts shall not be hand carried.

13-3.3.2 Cabs

(a) Necessary clothing and personal belongings shall be stored in such a manner as to not interfere with access or operation.

(b) Tools, oil cans, waste, extra fuses, and other necessary articles shall be stored in the tool box and shall not be permitted to lie loose in or about the cab.

13-3.3.3 Fire Extinguishers

Operators shall be familiar with the location, operation, and care of fire extinguishers provided.

13-3.3.4 Personnel Access

(a) Access to machine aisles by unauthorized personnel should be avoided.

(b) If necessary for personnel to be in aisles or runways, procedures for such entry should be established and carefully followed.

(c) In cases such as in para. 13-3.3.4(b), warning signs shall not be obstructed or removed, nor shall interlocks, where provided, be bypassed.

13-3.3.5 General Housekeeping

Good housekeeping practices are important to safe operation of the equipment.

Copyright ASME International
Provided by IHS under license with ASME
No reproduction or networking permitted without license from IHS
Not for Resale

--`,`,`-`-`,,`,,`,`,,`---

Copyright ASME International
Provided by IHS under license with ASME
No reproduction or networking permitted without license from IHS

Not for Resale

ASME Services

ASME is committed to developing and delivering technical information. At ASME's Information Central, we make every effort to answer your questions and expedite your orders. Our representatives are ready to assist you in the following areas:

ASME Press
Codes & Standards
Credit Card Orders
IMechE Publications
Meetings & Conferences
Member Dues Status
Member Services & Benefits
Other ASME Programs
Payment Inquiries
Professional Development
Short Courses
Publications
Public Information
Self-Study Courses
Shipping Information
Subscriptions/Journals/Magazines
Symposia Volumes
Technical Papers

How can you reach us? It's easier than ever!

There are four options for making inquiries* or placing orders. Simply mail, phone, fax, or E-mail us and an Information Central representative will handle your request.

Mail
ASME
22 Law Drive, Box 2900
Fairfield, New Jersey
07007-2900

Call Toll Free
US & Canada: 800-THE-ASME
(800-843-2763)
Mexico: 95-800-THE-ASME
(95-800-843-2763)
Universal: 973-882-1167

Fax—24 hours
973-882-1717
973-882-5155

E-Mail—24 hours
Infocentral@asme.org

* Information Central staff are not permitted to answer inquiries about the technical content of this code or standard. Information as to whether or not technical inquiries are issued to this code or standard is shown on the copyright page. All technical inquiries must be submitted in writing to the staff secretary. Additional procedures for inquiries may be listed within.

Copyright ASME International
Provided by IHS under license with ASME
No reproduction or networking permitted without license from IHS
Not for Resale


ISBN 0-7918-2822-0
9 780791 828229
J05203

Copyright ASME International
Provided by IHS under license with ASME
No reproduction or networking permitted without license from IHS
Not for Resale