ANSI/SPI B151.26-1993

American National Standard

for Plastics Machinery –

Dynamic Reaction Injection Molding Machines – Safety Requirements for the Manufacture, Care, and Use

American National Standards Institute
11 West 42nd Street
New York, New York
10036

Copyright American National Standards Institute
Provided by IHS under license with ANSI
No reproduction or networking permitted without license from IHS

Not for Resale

Copyright American National Standards Institute
Provided by IHS under license with ANSI
No reproduction or networking permitted without license from IHS
Not for Resale

ANSI/SPI B151.26-1993

American National Standard
for Plastics Machinery –

Dynamic Reaction Injection Molding Machines – Safety Requirements for the Manufacture, Care, and Use

Sponsor

Society of the Plastics Industry

Approved October 11, 1993

American National Standards Institute, Inc.

Copyright American National Standards Institute
Provided by IHS under license with ANSI
No reproduction or networking permitted without license from IHS

Not for Resale

American National Standard

Approval of an American National Standard requires verification by ANSI that the requirements for due process, consensus, and other criteria for approval have been met by the standards developer.

Consensus is established when, in the judgment of the ANSI Board of Standards Review, substantial agreement has been reached by directly and materially affected interests. Substantial agreement means much more than a simple majority, but not necessarily unanimity. Consensus requires that all views and objections be considered, and that a concerted effort be made toward their resolution.

The use of American National Standards is completely voluntary; their existence does not in any respect preclude anyone, whether he has approved the standards or not, from manufacturing, marketing, purchasing, or using products, processes, or procedures not conforming to the standards.

The American National Standards Institute does not develop standards and will in no circumstances give an interpretation of any American National Standard. Moreover, no person shall have the right or authority to issue an interpretation of an American National Standard in the name of the American National Standards Institute. Requests for interpretations should be addressed to the secretariat or sponsor whose name appears on the title page of this standard.

CAUTION NOTICE: This American National Standard may be revised or withdrawn at any time. The procedures of the American National Standards Institute require that action be taken periodically to reaffirm, revise, or withdraw this standard. Purchasers of American National Standards may receive current information on all standards by calling or writing the American National Standards Institute.

Published by

American National Standards Institute
11 West 42nd Street, New York, New York 10036

Copyright © 1995 by American National Standards Institute
All rights reserved.

No part of this publication may be reproduced in any form, in an electronic retrieval system or otherwise, without prior written permission of the publisher.

Printed in the United States of America

APS2C595/28

--`,,`,,`-`-`,,`,,`,`,,`---

Copyright American National Standards Institute
Provided by IHS under license with ANSI
No reproduction or networking permitted without license from IHS

Not for Resale

Contents

Page

Foreword iii

1 Scope, purpose, and application 1

2 Normative references 2

3 Definitions 3

4 Care – Responsibility for 6

5 Manufacturer, remanufacturer, and modifier 7

6 Use 11

7 Signs or plates 12

--`,,`,,`-`-`,,`,,`,`,,`---

Copyright American National Standards Institute
Provided by IHS under license with ANSI
No reproduction or networking permitted without license from IHS

Not for Resale

Foreword (This foreword is not part of American National Standard ANSI/SPI B151.26-1993.)

The project on Safety Requirements for the Manufacture, Care, and Use of Dynamic Reaction Injection Molding Machines was initiated under the auspices of the Injection Section of the Machinery Division and the Safety Committee of the Molders Management Division of the Society of the Plastics Industry, Inc. (SPI).

Both divisions of SPI have long been concerned with operator safety on Plastics Processing Equipment. Accordingly, each section of the Machinery Division has established a Standards Development Committee charged with the task of establishing safety standards.

A standard treating the manufacture, care, and use of dynamic-reaction injection molding machines is complicated by the variety and sizes of machines manufactured and in use, and by virtually infinite combinations of parts being produced, production methods used, and operating conditions existing in industry today.

The primary objective of this standard is to minimize hazards associated with machine activity by establishing requirements for the manufacture, care, and use of these machines.

To accomplish this objective, the committee decided to approach the problem of machine safety from two different directions:

– Eliminating by design certain recognized hazards and establishing standard approaches to design so that machines available from competitive manufacturers will have similar operational characteristics;

– Safeguard the point of operation to protect the operator from recognized hazards.

To assist in the interpretation of these requirements, responsibilities have been assigned to the manufacturer, the remanufacturer, the modifier, and the employer.

To assist all persons concerned in complying with the requirements of this standard, all explanatory information has been placed in the right column, adjacent to the requirements to which it applies.

Recognizing the impossibility of updating equipment and changing operating methods allied with existing machines immediately after the approval of this standard, a three-year period has been provided to employers for modifying machines. Manufacturers, remanufacturers, and modifiers must bring their machines into conformance within one year after the date of approval of the standard.

Suggestions for improvement of this standard will be welcome. They should be sent to the Society of the Plastics Industry, 1275 K Street, NW, #400, Washington, DC 20005.

Consensus for this standard was achieved by use of the Canvass Method.

The following organizations recognized as having an interest in the standardization of safety requirements for the manufacture, care, and use of dynamic reaction injection molding machines were contacted prior to the approval of this standard. Inclusion in this list does not necessarily imply that the organization concurred with the submittal of the standard to ANSI:

Aerospace Industries Association
Alliance of American Insurers
American Automobile Manufacturers Association
American Insurers Safety Group

--`,,`,,`-`-`,,`,,`,`,,`---
Copyright American National Standards Institute
Provided by IHS under license with ANSI
No reproduction or networking permitted without license from IHS
Not for Resale

American Standards Testing Bureau
Dana Molded Products
Factory Mutual Research
Grinding Wheel Institute
Industrial Safety Equipment Association
National Institute of Standards and Technology
Rubber Manufacturers
Society of the Plastics Industry

The Society of the Plastics Industry Standard Development Committee on Dynamic Reaction Injection Molding Standards, which was responsible for developing this standard, had the following members:

R. Brooks Hammer, Chairman
(Cannon USA, Inc.)

Ken Lamb
(Miles, Inc., Hennecke Machinery)
Dario J. Ramazzotti
(Edge Sweets Company)
Edward P. Sadler
(Dake Division, JSJ Corporation)
Drexel L. Winsted
(Cincinnati Milacron,
Plastics Machinery Division)

Explanation of Standard Format

American National Standard ANSI/SPI B151.26-1993 uses a two-column format to provide both specific requirements and supporting information.

The left column, designated “Standard Requirements”, is confined solely to these requirements and is printed in bold type. Where supporting photographs or sketches are required, they are designated as “figures”.

The right column, designated “Explanatory Information”, contains only information which the Committee believes would clarify the standard. This column is not a part of the standard. Where supplementary photographs or sketches are required, they are designated as “illustrations”.

Operating rules (safety practices) are not included in either column unless they are of such a nature as to be vital safety requirements, equal in weight to other requirements, or guides to assist in compliance with the standard.

Copyright American National Standards Institute
Provided by IHS under license with ANSI
No reproduction or networking permitted without license from IHS
Not for Resale

Copyright American National Standards Institute
Provided by IHS under license with ANSI
No reproduction or networking permitted without license from IHS
Not for Resale

American National Standard
for Plastics Machinery –

Dynamic Reaction Injection Molding Machines – Safety Requirements for the Manufacture, Care, and Use

STANDARD REQUIREMENTS

EXPLANATORY INFORMATION

(Not part of *American National Standard for Plastics machinery – Dynamic reaction injection molding machines – Safety requirements for the manufacture, care, and use*)

1 Scope, purpose, and application

E1 Scope, purpose, and application

This standard does not apply to low-pressure mixing systems.

1.1 Scope

The requirements of this standard shall apply to all reaction injection molding equipment consisting of moving molds and/or clamps, metering systems, single or multiple mix heads mounted in a stationary position or robotized. The mix heads will be mixing filled or unfilled liquid reactants and injecting said reactants into a closed or open mold.

Safety requirements for the design and construction of ancillary equipment for dynamic reaction injection molding machines are not covered by this standard. The use of ancillary equipment for handling or access at reaction injection molding machines (e.g., conveyor or belts, robots, extractors) shall not reduce the level of safety embodied in this standard.

1.2 Purpose

The purpose of this standard is to establish safety requirements with respect to the manufacture, care, and use of dynamic reaction injection molding machines.

E1.2 Purpose

The requirements of this standard are aimed at eliminating injuries to operating, maintenance, and set-up personnel while working on or adjacent to dynamic reaction injection molding machines, and at minimizing accidental damage to equipment.

--`,,`,,`-`-`,,`,,`,`,,`---

Copyright American National Standards Institute
Provided by IHS under license with ANSI
No reproduction or networking permitted without license from IHS Not for Resale

1.3 Application

1.3.1 New installations

The requirement of this standard pertaining to construction shall apply to all new dynamic reaction injection molding machines shipped for installation in the United States. Date of shipment (month and year) shall be affixed to the machine.

1.3.2 Former installations

Existing machines that are substandard shall be modified in accordance with the requirements of this standard. Employers are provided a three-year period from the approval of this standard to bring existing machines into compliance. Manufacturers, remanufacturers, and modifiers shall bring their machines into conformance within 1 year after the date of publication of this standard (May 1995).

1.3.3 All installations

An employer shall not operate a machine or permit it to be operated unless it is in compliance with this standard.

E1.3.1 New installations

Machines can be manufactured in the United States or anywhere else in the world.

E1.3.3 All installations

Inquiries with respect to the application of, or substantive requirements of this standard should be addressed to the Society of the Plastics Industry, 1275 K Street, NW, #400, Washington, DC 20005.

2 Normative references

The following standards contain provisions which, through reference in this text, constitute provisions of this American National Standard. At the time of publication, the editions indicated were valid. All standards are subject to revision, and parties to agreements based on this American National Standard are encouraged to investigate the possibility of applying the most recent editions of the standards indicated below.

ANSI Z535.1-1991, *Safety color code*

ANSI Z535.2-1991, *Environmental and facility safety signs*

ANSI Z535.3-1991, *Criteria for safety symbols*

ANSI Z535.4-1991, *Product safety signs and labels*

ANSI Z535.5-1991, *Accident prevention tags*

ANSI/NFPA 79-1994, *Electrical standard for industrial machinery*

--`,,`,,`-`-`,,`,,`,`,,`---

Copyright American National Standards Institute
Provided by IHS under license with ANSI
No reproduction or networking permitted without license from IHS

Not for Resale

3 Definitions

3.1 auto cycle ("continuous" or "full auto"): Denotes a cycle that is the same as that described in 3.31, except that after the first cycle has been initiated by an operator, the operation of the machine would be continuous (without operator intervention).

3.2 carousel: A carousel is a mechanical device designed to move clamps, molds, or both, through a specific fixed path.

E3.2 carousel: The clamps, molds, or both, can be mounted on pallets or carts, but move about the floor or on an elevated carrier. The moving devices are typically interconnected and driven by a chain located in the floor, overhead, or on the inside periphery.

3.3 clamp: That portion of the dynamic reaction injection molding machine that holds the two halves of the mold, and opens and closes the mold.

E3.3 clamp: Specialized clamping systems not covered by the clamp description, such as self-contained molds, are not covered by this standard.

3.4 closed pour: A closed pour condition occurs when a closed and locked mold enters the pour area. The mix head locates the pour hole on the mold and inserts the reactants. After the mix head is withdrawn, a pour head closer seals off the pour hole to prevent the escape of the reacting materials.

3.5 emergency stop: This function is incorporated into a red mushroom button or emergency stop cable, and interrupts the entire system's operation and prevents any movements, injections, or both. Once an auto cycle is interrupted, manual operations shall be used to complete the cycle and restart molding operations.

3.6 employer: Any person who hires or is responsible for the personnel associated with dynamic reaction injection molding machine operation.

3.7 fixed guard: A barrier placed over moving parts of the machine where hazards exist. A fixed guard requires the use of hand tools in order to remove it.

3.8 fully automated operation: A dynamic reaction injection molding machine in which operators are not required to perform manual functions as a part of the normal production process.

3.9 hoses: High-pressure chemical or hydraulic hoses located in the high-pressure portion of the reaction injection molding system.

--`,,`,,`-`-`,,`,,`,`,,`---
Copyright American National Standards Institute
Provided by IHS under license with ANSI
No reproduction or networking permitted without license from IHS
Not for Resale

3.10 lower platen: That part of the clamp unit that mounts on the lower part of the frame and provides the lower mold-clamping surface.

E3.10 lower platen: See illustration 1.

3.11 manual cycle: Denotes that the system is being operated from the operator's console, with each function being selected individually by activation of the proper switch or button. The machine controls shall be in the "manual" mode of operation.

3.12 manual operation: Denotes a dynamic reaction injection molding machine in which operators are required to perform manual tasks as a part of the normal production process.

3.13 manufacturer: Any person whose business is the manufacture of new dynamic reaction injection molding machines for installation in the United States.

E3.13 manufacturer: The word, *manufacturer*, includes those who manufacture, reconstruct, or modify dynamic reaction injection molding machines for their own use.

3.14 metering system: Any high-pressure system designed to accurately proportion the reactants to the mix head. Types of systems would include high-pressure metering pumps, lance-type displacement cylinders, and piston type displacement cylinders.

3.15 mix head: A device into which the liquid components or reactants are metered and mixed.

3.16 mix head interlock: A circuit that prevents operation of the mix head until safety conditions are met.

3.17 modifier: Any person who changes the machine such that it no longer meets the original equipment manufacturer specifications.

3.18 open pour: An open pour condition occurs when an open mold enters the pour station and the mix head discharges the reactants into the lower half of the mold. After the pouring operation is complete, the mold is closed and locked.

3.19 operator: An individual who performs production work on the dynamic reaction injection molding machine and controls the movement of the machine.

3.20 perimeter guard: A physical means of separating personnel from areas of entrapment.

Copyright American National Standards Institute
Provided by IHS under license with ANSI
No reproduction or networking permitted without license from IHS
Not for Resale

3.21 pipe and tubing: Pipe and tubing used in the high-pressure portion of the reaction injection molding system.

3.22 point of operation: That area on a machine where work is being performed upon components being processed, or the area where the finished part is removed from the mold.

3.23 presence-sensing device: A device designed, constructed, and arranged to create a sensing field, area, or plane that will detect the presence of a person's hand or other body part and send a signal to stop or prevent hazardous motion of the machine.

E3.23 presence-sensing device: See illustration 2.

3.24 pressure switch: An electrical contact device located in a pressurized system designed to electrically signal when a preset pressure is reached.

E3.24 pressure switch: A metering system pressure switch may be used to shut off the high-pressure motors or stop the stroke of the cylinders when a preset pressure is reached.

3.25 reactant: Any of the liquid components used.

3.26 relief valve: A safety device installed in a pressure system designed to relieve pressure when a set value is exceeded. The relief is diverted into a contained low-pressure area.

E3.26 relief valve: When a preset maximum desired pressure is reached, the relief valve unseats, permitting pressurized reactants to be diverted to a contained low-pressure area of the system.

3.27 remanufacturer: Any person whose business is the redesign and/or major reconstruction of dynamic reaction injection molding machines for installation in the United States.

3.28 rupture disc: A mechanical device located in a high-pressure metering system and designed to burst when a specific pressure is reached. The line pressure is reduced to a safe limit when the metered components are permitted to flow back into a low-pressure portion of the system.

E3.28 rupture disc: Rupture discs are designed to fail at the maximum desirable system pressure. When failure occurs, the system pressure immediately drops and the reactants are safely diverted back to the low-pressure side of the system.

3.29 safety checklist: Refers to a list of items provided by the machine manufacturer, remanufacturer, or modifier to guide the operator in making safety inspections of the reaction injection molding machine.

3.30 safety mat or safety platform: A device positioned on the floor at the front or around the machine. When the operator steps on the mat or platform, machine functions shall stop.

E3.30 safety mat or safety platform: See illustration 2.

--`,,`,,`-`-`,,`,,`,`,,`---

Copyright American National Standards Institute
Provided by IHS under license with ANSI
No reproduction or networking permitted without license from IHS
Not for Resale

3.31 semi-auto or single cycle: Denotes that the control system is controlling function, speed, duration, and sequence of operations for a complete molding cycle. Once completed, the clamp will remain in a "waiting" state until another molding cycle is initiated by operator activation of the cycle start button. The machine controls shall be in the "semi-automatic" mode of operation.

3.32 shall: Denotes a mandatory requirement.

3.33 should: Denotes a recommendation.

3.34 shuttle system: The shuttle system is a mechanical means of moving clamps, or molds, or both, to a specific area to enable various operations to take place. The clamps or molds are mounted on a pallet or cart that moves about the floor or elevated platform.

E3.34 shuttle system: Movement of the clamps and/or molds can be independent and at varying speeds. Movement can be by various means such as chain, cylinder indexing, or by independent power source.

3.35 sign or plate: A surface on which letters or other markings appear, prepared as a warning for safety or as instructions to employees who may be exposed to the potential hazards of industrial operations. Excluded from the definitions, however, are news releases or displays commonly known as safety posters, or bulletins used for employee education.

3.36 turntable: Turntables are flat, circular devices that rotate about a center axis. Clamps, or molds, or both, located around the peripheral of the table are presented at the various work stations by a movement of the table.

E3.36 turntable: Tables can be either an indexing type or a continuous moving type, depending on the specific application. Peripheral work stations around the table can include pouring, curing, opening, closing, mold release application, part removal, cleaning, and insert application.

3.37 two-hand control device: A two-hand control that requires presence from both hands of the operator until holding requirements are satisfied.

3.38 upper platen: That part of the clamp unit that mounts on the upper part of the frame and provides the upper mold clamping surface.

E3.38 upper platen: See illustration 1.

4 Care – Responsibility for

4.1 Instructions

4.1.1 Manufacturer

E4.1.1 Manufacturer

It shall be the responsibility of the manufacturer to furnish instructions with the dy-

Although much literature of a general nature exists for guidelines in the care of these ma-

Copyright American National Standards Institute
Provided by IHS under license with ANSI
No reproduction or networking permitted without license from IHS
Not for Resale

namic reaction injection molding machine to establish guidelines for operation, preventive maintenance, and troubleshooting as required to operate and maintain the machine, and to make available training and materials.

4.1.2 Modifier

It shall be the responsibility of any person modifying a dynamic reaction injection molding machine to furnish adequate instructions with the modifications to establish new or changed guidelines for operation and maintenance of the machine so modified, and to make available training and materials.

4.1.3 Remanufacturer

It shall be the responsibility of any person remanufacturing a dynamic reaction injection molding machine to furnish adequate instructions with the remanufactured machine, and to make available training and materials.

5 Manufacturer, remanufacturer, and modifier

5.1 Responsibility

5.1.1 Manufacturer

It shall be the responsibility of the dynamic reaction injection molding machine builder to design and construct the machine in accordance with clauses 5 and 7 of this standard.

5.1.2 Remanufacturer

It shall be the responsibility of any person remanufacturing a dynamic stationary reaction injection molding machine to do so in accordance with clauses 5 and 7 of this standard.

5.1.3 Modifier

It shall be the responsibility of any person modifying a dynamic stationary reaction injection molding machine to do so in accordance with the applicable points of clauses 5 and 7 of this standard.

chines, each manufacturer's product has unique characteristics requiring separate treatment.

E4.1.2 Modifier

Many modifications and rebuilding efforts are so extensive that any original instructions from the original manufacturer are incorrect or meaningless.

E5.1.2 Remanufacturer

Any remanufacturing must meet the requirements of this standard.

Copyright American National Standards Institute
Provided by IHS under license with ANSI
No reproduction or networking permitted without license from IHS
Not for Resale

5.2 Point of operation guarding

5.2.1 Fixed perimeter guarding (fully automated operation)

Fixed perimeter guarding shall separate personnel from areas of entrapment. If guards are portable or movable for purposes other than maintenance, interlocks shall be provided that will prevent machine operation if guards are moved or removed. When access to the interior of the perimeter guarding is required by the use of a gate or door, such gate or door shall be interlocked, preventing machine operation if they are opened or removed. On fully automated machinery, the entire operations area where operator actions are required shall be guarded in a manner to prevent or interrupt automatic operation of the machine and its automation equipment if the guarded area is penetrated.

E5.2.1 Fixed perimeter guarding (fully automated operation)

See illustration 2. If the reaction injection molding machine is automated by the employer, it is the intent of this standard to point out to the employer that it is his or her responsibility to provide guarding.

5.2.2 Safety mat, safety platform, interlocked guard, presence-sensing device

One or more of these devices shall be used in conjunction with the fixed perimeter guard (fully automated operation).

E5.2.2 Safety mat, safety platform, interlocked guard, presence-sensing device

See illustration 2.

5.2.2.1 Safety mats or safety platforms, when used, shall be designed and constructed to detect the presence or absence of the operator or others.

E5.2.2.1 The size of the safety mat or safety platform should be large enough to prevent entry into the hazardous area. In some cases, this may require the use of more than one mat or additional safeguarding. Whenever possible, the mat should be fixed in place in such a manner so as to prevent easy relocation or removal by the operator or other unauthorized personnel.

5.2.2.2 The safety mat or safety platform shall detect and respond to the presence or absence of the operator or others anywhere on its sensing surface. The control circuit of the safety mat shall be capable of being incorporated in the machine control circuit to prevent hazardous motion when the operator or others are anywhere on the sensing surface.

5.2.2.3 The safety mat or safety platform shall be designed and constructed such that it does not in itself create a hazard to the operator or others.

5.2.2.4 The safety mat or safety platform shall be designed and constructed such that any single component failure, includ-

Copyright American National Standards Institute
Provided by IHS under license with ANSI
No reproduction or networking permitted without license from IHS
Not for Resale

ing output devices, shall not prevent the normal stop command from being sent to the machine, but will prevent successive machine cycles until the failure has been corrected.

5.2.2.5 An operator's gate, when used, shall be interlocked with the machine control so if the gate is opened, the machine functions stop.

5.2.2.6 The presence-sensing device, when used, shall be designed and constructed to create a field sensitive to the presence of the operator's hand or other body part.

5.2.3 Fixed perimeter guarding (manual operation)

Manual operations requiring employees to be in close proximity to a dynamic reaction injection molding machine shall have perimeter guarding that guards pinch points and minimizes the possibility of snagging clothing. The perimeter guarding shall be in the form of a shield that eliminates the potential hazard.

E5.2.3 Fixed perimeter guarding (manual operation)

Certain dynamic reaction injection molding machines require manual input from the employee to handle such operations as loading inserts, applying mold release, unloading product, etc. Fixed perimeter guarding as outlined in 5.2.1 cannot be employed.

5.2.4 Fixed guard

The operation area shall meet the requirements of 5.2.1 or 5.2.3 of this standard for fixed guarding.

5.2.5 Overpressure protection

At least one pressure limiting device per component stream shall be installed to limit the maximum obtainable pressure in the chemical hoses, pipe, and/or tubing.

E5.2.5 Overpressure protection

Overpressure devices may include relief valves, rupture discs, overpressure electrical switches, or electronic pressure limiters.

5.2.6 Mix head interlock

The control circuit of the dynamic reaction injection molding machine shall contain adequate mix head interlocks to prevent operation of the mix head until all safety considerations are met. Such considerations will be defined by the type of dynamic reaction injection molding machines involved. Contact with mixing or reaction materials shall be avoided.

E5.2.6 Mix head interlock

Exothermic reactions can cause serious burns to operating personnel.

5.2.7 Two-hand control

Two-hand controls shall conform to the following construction requirements:

a) Each two-hand control shall be arranged by design, construction, separa-

--`,,`,,`-`-`,,`,,`,`,,`---

Copyright American National Standards Institute
Provided by IHS under license with ANSI
No reproduction or networking permitted without license from IHS
Not for Resale

tion, or any combination of these, to require the concurrent use of both hands to initiate the machine operation;

b) The two-hand control shall incorporate anti-repeat circuitry that prevents machine operation, should one control be “tied” down, in an attempt to allow one-hand operation.

5.2.8 Emergency stop

The reaction injection molding clamp shall incorporate an emergency-stop, red-mushroom pushbutton or emergency-stop cable to allow the operator to interrupt a molding cycle at any time.

5.2.9 Operational modes

The reaction injection molding system shall incorporate both manual and automatic operating cycle modes. Direct operator control (manual mode) is required for safe and easy machine set-up. The automatic molding cycle sequence is required for rapid and repeatable production molding cycles. Additional functions may be incorporated to enhance overall operational flexibility.

5.3 General requirements

5.3.1 Hoses

Hoses used in the high-pressure system shall be rated for a working pressure greater than the maximum obtainable system pressure. Fittings, "O" rings, and hoses shall be compatible with the reactants.

5.3.2 Pipe and tubing

Pipe or tubing, or both, used in the high-pressure system shall be rated for a working pressure greater than the maximum obtainable system pressure.

5.3.3 Electrical systems

Machines shall be built and installed according to the requirements of ANSI/NFPA 79.

5.4 Special machines

5.4.1 Guarding

Because of the potential for a wide variety of designs and individually designed equipment, it is impractical to define complete guarding requirements for all future machines. Whenever possible, all new equip-

--`,,`,,`-`-`,,`,,`,`,,`---

Copyright American National Standards Institute
Provided by IHS under license with ANSI
No reproduction or networking permitted without license from IHS
Not for Resale

ment shall be guarded in accordance with 5.2 and 5.3. Where not practical, the builder shall provide equivalent safety devices.

5.5 Signs or plates for new installations

The requirement of this standard shall apply to all dynamic reaction injection molding machines shipped for installation in the United States.

E5.5 Signs or plates for new installations

See clause 7 for specific requirements.

6 Use

6.1 Training of operators, set-up, and maintenance personnel

It shall be the responsibility of the employer to ensure the original and continuing competence of personnel caring for, inspecting, and maintaining dynamic reaction injection molding machines.

E6.1 Training of operators, set-up, and maintenance personnel

While general literature exists to provide a good foundation for training of maintenance personnel, it should be noted that these machines have unique features not necessarily identical to those of other machinery, and therefore require specialized training for maintenance personnel. Pertinent literature and training should be provided to the employee at the time of new machine start-up and demonstration.

6.2 Inspection and maintenance

It shall be the responsibility of the employer to establish and follow a program of periodic and regular inspections of the dynamic reaction injection molding machines to ensure that safeguards are in place and functioning as intended, and that the machine is in a safe operating condition.

E6.2 Inspection and maintenance

It is recommended that a visual inspection of operations and safeguards be made at least once per shift. At least monthly, each machine should be examined and such examination indicated on individual record forms.

6.3 Personal protective equipment

Personnel shall wear safety glasses, protective clothing, respirators, or other protective devices as specified by the employer, material safety data sheets, or the operator's manual.

6.4 Instruction of operators, set-up, and maintenance personnel

The employer shall train and instruct personnel in the safe method of operation of the safety devices provided, as described in clauses 5 and 6, before starting work on any operation covered by this standard. The employer shall also instruct personnel in the safety procedures recommended by the material safety data sheets.

E6.4 Instructions to operators, set-up, and maintenance personnel

The employer should consider setting up a checklist to ensure that operators are kept aware of procedures to follow in operating the machine safely. This checklist should be kept in the instruction manual of the machine, and periodically (such as every 6 months) the employer should have operators check off the list. It is recommended that the employer verify the compatibility of the reactants with the machine

Copyright American National Standards Institute
Provided by IHS under license with ANSI
No reproduction or networking permitted without license from IHS
Not for Resale

prior to their use by checking with the reactant manufacturer.

6.5 Work area

The employer should provide clearance between machines so the movement of one operator will not interfere with the work of another. Ample room for cleaning machines, handling of materials, work pieces, and scrap shall also be provided. All surrounding floors shall be kept in good condition, clean, and so far as practical, in a dry condition. Where wet conditions routinely exist, a slip-resistant surface shall be provided.

E6.5 Work area

The handling of raw materials, parts in process, finished parts, scrap, and waste is a part of every plastics plant operation. Proper materials handling is important for the safety and performance of machines and machine operators. Consult with the material supplier for proper handling.

6.6 Ventilation

The employer shall provide adequate ventilation for the work area. Adequate vapor removal is an operational requirement for reaction injection molding installations. The reaction injection molding process includes operations such as mold release application, calibration, chemical mixing and injection, and demolding, where organic vapors may be present. Consult the material supplier for ventilation recommendations.

7 Signs or plates

7.1 General

The color, format, and size of all plates or signs shall conform to ANSI Z535.1, Z535.2, Z535.3, Z535.4, and Z535.5, where feasible.

7.2 Sign wording and location

The plate or sign shall contain sufficient information to be understood. The wording shall make a positive rather than a negative suggestion and shall be accurate in fact.

E7.2 Sign wording and location

The design of reaction injection molding machines varies considerably from one builder to another. Therefore, to provide maximum safety in the use of these machines, warning signs appropriate to each of the various hazards should be applied as needed. The suggested wording of the following list of signs is intended to point out the dangers to be covered rather than the actual wording to be used. The design of the machine will usually dictate the wording required for each sign.

DANGER – High Voltage – High Temperature.

DANGER – Do not operate with guards removed.

Copyright American National Standards Institute
Provided by IHS under license with ANSI
No reproduction or networking permitted without license from IHS
Not for Resale

WARNING – When working on machine for other than molding operations, shut off motors and turn disconnects to “OFF” position.

WARNING – Safe operating practices warning operators not to operate machine unless thoroughly instructed on safety rules and operations.

WARNING – Ground machine before operating.

WARNING – Keep guards in place while operating.

WARNING – Fumes, vapors, and skin contact with some plastics raw materials used in this machine may be hazardous to your health. Before operating this machine, obtain information from your materials supplier concerning the potential hazards of the raw material you are using. Follow all ventilation requirements and other recommendations of the material supplier. Immediately cleanse any part of the body which has come into contact with reactants.

Because of the wide variety of designs, sign locations will vary. Signs should be located as close to the actual hazard as practical. It is advised that other signs be used, beyond those already recommended, if the design of the equipment results in other danger areas that cannot be adequately guarded due to operating requirements.

Copyright American National Standards Institute
Provided by IHS under license with ANSI
No reproduction or networking permitted without license from IHS
Not for Resale

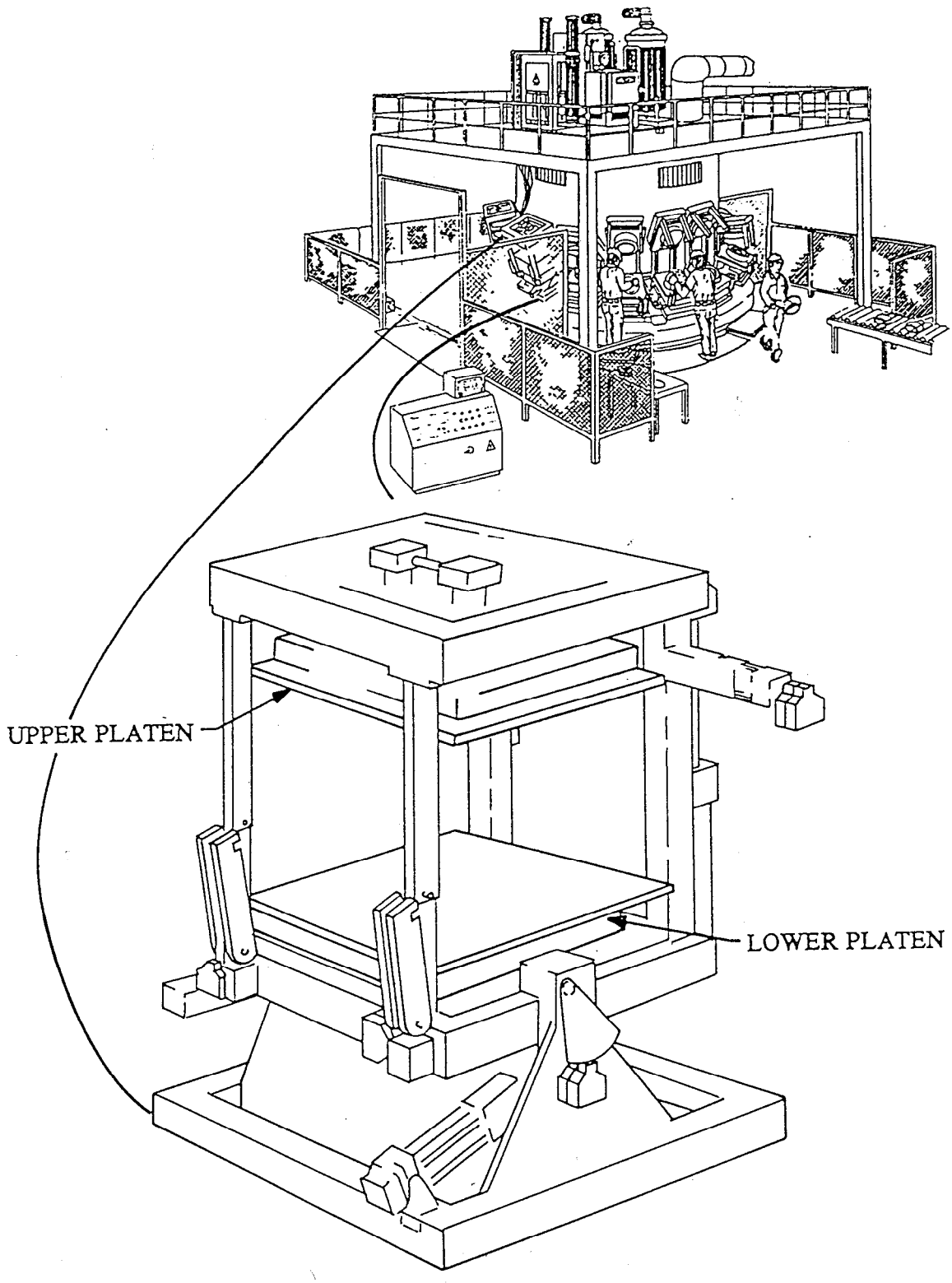

Illustration 1 – Dynamic reaction injection molding machine

Copyright American National Standards Institute
Provided by IHS under license with ANSI
No reproduction or networking permitted without license from IHS
Not for Resale

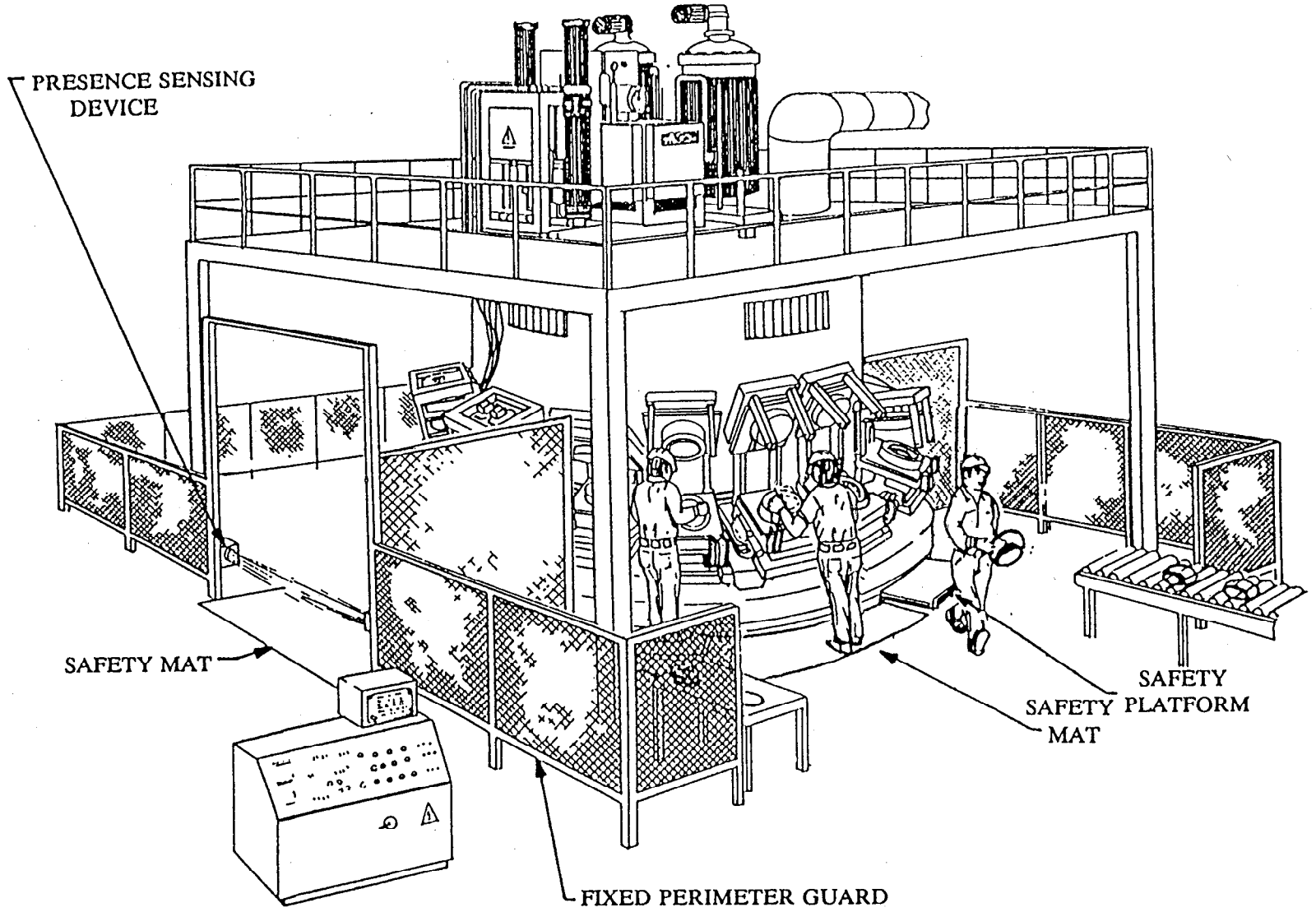

NOTE – The safety mats and safety platforms on the worker's access side are used for planned access to the system area; when the workers are not standing on the mats, the work station is free to index to the next position. The presence-sensing device and safety mat combination behind the control panel restricts access to that area. Any unplanned entry will cause an emergency stop condition that must be reset before the machine can be restarted.

Illustration 2 – Various safety devices as used on one type of dynamic reaction injection molding machine

Copyright American National Standards Institute
Provided by IHS under license with ANSI
No reproduction or networking permitted without license from IHS
Not for Resale