Conveyor Equipment Manufacturers Association

Belt Conveyors for Bulk Materials



PREPARED BY THE ENGINEERING CONFERENCE

With Metric Conversion

The Voice of the Conveyor Industry of the Americas

CONVEYOR EQUIPMENT
MANUFACTURERS ASSOCIATION

Printed by the Engineering Conference of the Conveyor Equipment Manufacturers Association

BELT CONVEYORS for BULK MATERIALS

SEVENTH EDITION

WWW.CEMANET.ORG has issued this document (14604) on Apr 24, 2017 to Suraphon Sritrakool, Suanluang, , , Thailand.

Published by the Conveyor Equipment Manufacturers Association
5672 Strand Ct., Ste. 2 | Naples, Florida USA 34110 | 239-514-3441 www.cemanet.org

Copyright © 2014 by the Conveyor Equipment Manufacturers Association
All rights reserved. This book may not be reproduced in any form without written permission from the Conveyor Equipment Manufacturers Association

Printed in the United States of America

Page layout and editing by IHS Website Solutions

WWW.SMACNT.ORG has issued this document (14604) on Apr 24, 2017 to Pattarapom Sritrakool, Suanluang, , , Thailand

Library of Congress Cataloging in Publication Data

Conveyor Equipment Manufacturers Association
Engineering Conference
Belt Conveyors for Bulk Materials

Includes index.
1. Belt Conveyors 2. Bulk Solids Handling

ISBN: 1-891171.44.5
ISBN13: 978-1-891171.44.4

TABLE OF CONTENTS

Chapter *Index Title* ..... *Page*

PREFACE IX
ACKNOWLEDGEMENTS X
INTRODUCTION XI

ONE - BELT CONVEYOR GENERAL APPLICATIONS AND ECONOMICS 1
Introduction 2
Wide Range of Capacities 3
Adaptability to Path of Travel 4
Loading, Discharging, and Stockpiling Capabilities 6
Process Functions 7
Reliability and Availability 8
Safety 9
Low Maintenance Costs 10
Feasibility Studies 12
Summary 13

TWO - DESIGN CONSIDERATIONS 15
Introduction 17
Basic Flat and Troughed Belt Conveyor Paths 18
Belt Conveyor Loading and Discharge Arrangements 22
Types of Structures 23
Connections 27
Codes and Standards 28
Design 32
Loads 35
Corrosion Protection 40
Maintenance 42
Crossovers and Crossunders 47
The Long Term Effects of Design Decisions 47

THREE - CHARACTERISTICS AND CONVEYABILITY OF BULK MATERIALS 49
Introduction 50
Material Characteristics 50
Material Class Description 51
Behavior of Materials on a Moving Belt 54
Effect of Inclines and Declines 54

WWW.CEMANET.ORG has issued this document (4/20/2017) to Pattarapon Chaiyapon, Suranaree U. Thailand

FOUR - CAPACITIES, BELT WIDTHS AND SPEEDS 59
Introduction 60
Belt Widths 60
Belt Speeds 61
Troughed Belt Bulk Material Cross Sections 64
Belt Conveyor Capacities 79
Belt Conveyor CEMA 100% Standard Area and Capacity Tables 81

FIVE - BELT CONVEYOR IDLERS 91
Introduction 93
Idler Classifications 93
General Types of Belt Conveyor Idlers 93
Idler Spacing 100
The Selection of Idlers 101
Belt Speed 104
Preface to Selection Procedure, Figures and Tables 106
Rigid Frame Idlers Load Rating, ILR, and Capacity Tables 112
Example Idler Selection 115
Belt Alignment 124
Average Weight of CEMA Idler Rotating Parts Tables 125
Average Inertia of CEMA Class Idlers Tables 127

SIX - BELT TENSION AND POWER ENGINEERING 129
Scope 134
Introduction 134
Basic and CEMA Historical Design Methods 141
The CEMA Universal Design Method 142
Tension Management 203
Transient Tension - Simplified Approach 210
Transient Tensions - Dynamic Analysis 217
Component Tension Characteristics 222
Conveyor as a System 238
Design Tools 252
Example Conveyor Analysis 254
Chapter 6 Conclusion 267

WWW.CEMANET.ORG by Thailand Textile Institute (TTI) on Dec 24, 2020 for Patarapan Sittrakool, Stamford, , Thailand

SEVEN - BELT SELECTION 269
Introduction 271
Determining Belt Specifications 271
Factors in the Composition of Conveyor Belting 271
Conveyor Belt Cover Characteristics, Composition and Design 272
Loading Considerations 278
Molded Edge Belting 279
Cut/Slit Belt Edge 279
Steel Cord Belt Covers 279
The Belt Carcass 280
Belt Splices 285
Belt and System Considerations 287
Impact Resistance 291
Conveyor Belt Selection 294
Elevator Belt Tension Recommendations 302
Belt Selection Tables 303

EIGHT - PULLEYS, SHAFTS AND BEARINGS 311
Introduction 313
Conveyor Pulleys 313
Pulley Lagging 322
Shafting 325
Bearings for Conveyor Assemblies 331
Pulley Terminology 347
Special Pulleys 348

NINE - CURVES 351
Introduction 352
Vertical Curves 352
Horizontal Curves 361
Application Considerations 368

TEN - STEEP ANGLE CONVEYING 371
Introduction 373
Incline Limitations with Conventional Conveyors 373
Molded Cleat Belts 374
Pocket Belt Conveyors 381
Totally Enclosed Belt Conveyors 390
Pipe/Tube Belt Conveyors 391
Fold Belts 404
Suspended Belt Conveyors 410
Sandwich Belt Conveyors 415

WWW.CEMANET.ORG is issued this document on 04/21/2017 to Sharpen Stirakol, Stamford, Holland

ELEVEN - BELT CLEANERS AND ACCESSORIES 429
Introduction 431
Conveyor Belt Cleaning Equipment 431
Access Doors 452
Stops 452
Impact Beds 454
Belt Training Devices 457
Belt Turnovers 459
Pulley Cleaners 460
Deck Plates 462
Drip Pans 463
Spill Protections 463
Weather Protection 464
Magnetic Separators 466
Metal Detectors 468
Conveyor Belt Scales 469
Sampling Devices 469
Rip Detection Systems 471
Electrical Conveyor Accessories 472
Accessory Power Requirements 476
The Importance of Maintenance 477

TWELVE - TRANSFER POINTS 479
Introduction 483
System Design 484
Flow Surfaces 487
Controlled Flow Transfers 488
Addressing Impact 489
Control of Fugitive Material 492
Controlled Flow Chutes 510
Skirtboards 512
Wear Liners 519
Dribble Chutes 523
Other Discharge Chutes 523
Feeders 526
Belt Feeders 529
Trippers 542
Discharge Plows 543
Discharge Trajectories 545
Plotting The Trajectory 560
Examples Of Trajectories 563

WWW.CEMANET.ORG by Jaturong Boonsang (1464) on 17-Jul-2017 to Rajamangala Srivijaya, Suvarnabhumi, Thailand

THIRTEEN - CONVEYOR MOTOR DRIVES AND CONTROLS 577
Introduction 580
Conveyor Drive Evaluation Criteria 580
Belt Drive Attributes 585
Conveyor Drive Systems Overview 588
Speed Reducers 606
Belt Conveyor Drive Arrangements 608
Backstops 613
Brakes 617
Brakes and Backstops in Combination 618
Devices for Acceleration, Deceleration, and Torque Control 619
Brake Heat Absorption Capacity 622
Conveyor Belt Controls 623
Belt Protection Controls 624
Belt Control Apparatus 628
Conclusion 629

FOURTEEN - OPERATION, MAINTENANCE AND SAFETY 631
Introduction 632
Operation 632
Maintenance 633
Lubrication 642
Safety 644
Guidelines for Safe Operation and Maintenance 645
Guarding 653
Risk Assessment 662
Trouble Shooting Conveyor Problems 672

FIFTEEN - BELT TAKEUPS 675
Introduction 676
Belt Takeups 676
Belt Stretch or Elongation 676
Takeup Movement 676
Manual Takeups 677
Automatic Takeups 679
Takeup Safety Devices 689

SIXTEEN - EMERGING TECHNOLOGIES 693
Emerging Technologies 695
Air Supported Conveyors 695
Discrete Element Simulation 717
Gearless Conveyor Drives 732
In Pit Crushing 736

WWW.CEMENET.ORG has issued this document (1056) on Apr 24, 2017 to Supanut Thanakol, Siamtechno Co., Thailand

LIST OF EQUATIONS, FIGURES AND TABLES 737

APPENDIX A Units 763
APPENDIX B Nomenclature 765
APPENDIX C CEMA Historical Method K_x, K_y and K_t Factors 787
APPENDIX D Conveyor Installation Standards For Belt Conveyors Handling Bulk Materials 799
APPENDIX E Belt Conveyor Idler Roll Ai' Test Procedure 811
APPENDIX F Belt Conveyor Idler Roll Kis' Test Procedure 817
INDEX 823

WWW.CEMANET.ORG has issued this document (14604) on Apr 24, 2017 to Pattarapom Sriratchakul Suchard, , Thailand

PREFACE

The goal of this book is to be the definitive resource for experienced conveyor engineers on the design, installation, operation, safety, and maintenance of belt conveyors for bulk materials. The methods detailed in this book can greatly assist experienced conveyor engineers in designing efficient and reliable bulk material conveyor systems with a level of quality that reflects a systems approach to design and operation, and meet the user's expectations.

Experienced conveyor engineers can use the information and engineering principals set forth herein to design virtually any width, length, configuration and capacity of bulk materials handling belt conveyor systems, and predict its performance within an acceptable range. Interested parties can also gain a basic understanding of the engineering, component selection, related equipment and accessories, and applications for belt conveyors.

The information presented in this book is intended to cover the basic principles of belt conveyor design and to include such formulas, tables, charts and recommendations as are required to design most belt conveyors. The material is arranged in the order most convenient for the use by an experienced conveyor engineer. As always, the responsibility for the ultimate safety, reliability, and functionality of any conveyor system rests with those who design and build it.

While the formulas, recommendations and data are based on industry practice and are believed to be reliable, CEMA does not, and can not, assume any role in, or responsibility for, the safety, reliability or functionality of any conveyor system or component which it did not design. The formulas and principles in this book are guidelines only and are applicable to the design of a high percentage of conveyors that are operated under reasonably normal conditions. However, conveyor design is as much an art as it is science, and some conveyors will operate under conditions that are beyond the scope of this book. These design challenges require broad experience for a satisfactory solution. A qualified and licensed designer or engineer from a CEMA member company should be consulted in such cases, as well as in the design of conveyors that are critical to a process, are very wide or fast conveyors, and complex conveyor systems.

The units of force are expressed as lbf (kgf). If a clear distinction is appropriate between force and mass, the mass units will be expressed as lbm (kgm). In cases where necessary or customary Newtons (N) are used for force. Bulk material unit weight is referenced as bulk density throughout this text though the intent in engineering calculations is usually to use the specific weight. Therefore the symbol γ_m for the weight per unit volume is used rather than the typical symbol ρ for mass per unit volume.

Equations are formatted, whenever possible, in fundamental engineering terms. This approach accommodates user preferences for units. Examples use dimensional values but rounding of input variable values can create slight differences in the results between what is shown in the text and those obtained by manual working of the examples. Final flight tension values are typically rounded to whole numbers. Rounding conventions may vary between different chapters due to the common practices of different component groups.

WWW.CEMANET.ORG has a limited document (MAP) on April 01, 2017 to [illegible], subject to [illegible]

DISCLAIMER

The information provided herein is advisory only.

These recommendations provided by CEMA are general in nature and are not intended as a substitute for professional advice. Users should seek the advice, supervision and/or consultation of qualified and licensed engineers, safety consultants, and other qualified professionals.

Any use of this publication, any information contained herein, or any other CEMA publication is made with the express agreement and understanding that the user and the user's company assume full responsibility for the designs, safety, specifications, suitability and adequacy of any conveyor system, system component, mechanical device, or electrical device designed or manufactured using this information.

The user and the user's company understand and agree that CEMA, its member companies, its officers, agents and employees are not and shall not be liable in any manner under any theory of liability to anyone for reliance on or use of these recommendations. The user and the user's companies agree to release, hold harmless and indemnify and defend CEMA, its member companies, successors, assigns, officers, agents and employees from any and all claims of liability, court costs, attorneys fees (including attorney's fees incurred at trial and appeal), or damages arising in any way out of the use of this information.

CEMA and its member companies, successors, assigns, officers, agents and employees make no representations or warranties whatsoever, either expressed or implied, about the information contained herein, including, but not limited to, representations or warranties that the information and recommendations contained herein conform to any federal, state or local laws, regulations, guidelines or ordinances.

END

WWW.CEMANET.ORG has issued this document (1460-4) [date] 2017 to [illegible] Sritrakool, [illegible] Thailand

ACKNOWLEDGEMENTS

The Conveyor Equipment Manufacturers Association is indebted to the members of The Engineering Conference, The General Bulk Material Handling Section, The Unit Handling Conveying Section, and the many other individuals who contributed their time, effort and resources to the planning and compilation of this book; to the member companies who made available the time and talent of their engineers, draftspersons and marketing specialists; to the non-member companies, technical associations and professional societies for their assistance in making this book a reality.

CEMA and all of its members would like to express our appreciation to R. Todd Swinderman, PE, for his work in organizing, writing and producing this 7th Edition of the Belt Book. We are most grateful for his extraordinary effort and dedication without which this book would never have been completed. We are also appreciative of the contributions of Allen V. Reicks, PE for his work on Chapter 4 and the Universal Method power calculations in Chapter 6. Andrew Jennings and Yijun Zhang are recognized for their contribution of the Indentation Loss Large Sample calculation method in Chapter 6.

CEMA thanks FLSmidth for permission to use their photo for the cover.

Finally, we would like to thank our collaborators in Brazil, The Associação Brasileira de Normas Técnicas (ABNT), and the Associação Brasileira da Indústria de Máquinas e Equipamentos (ABIMAQ) for their contributions to the publication, as well as their translation to, and publication of, the book in Portuguese which will help make this book more widely available to the international community.

WWW.CEMANET.ORG has issued this document (14604) on Apr 24, 2017 to Gerardo Sanchez Smith (gsanchez@cema.org), subscriber.

The development of belt conveyors, capable of transporting virtually any bulk materials at thousands of tons per hour in a continuous and uniform stream, has been one of the most important innovations for modern industry. Its history dates back to 1830 when sawmills applied flat belts sliding in steel troughs to move sawmill refuse and other materials away from milling operations. In the 1850's, the grain industry evolved the first conveyors designed to reduce the friction of rubber sliding in a steel trough by replacing the trough with a series of pulleys, with end discs separated by bent bars, to form a cup for troughing a leather belt. These leather troughed belt conveyors were successfully applied in many grain elevators during the 1860's through 1880 as refinements in the bent bar pulley design led to spooled wooden drums with shafts supported in bearings.

It wasn't until 1891 that rubber belt conveyors were applied to handling heavy bulk materials previously considered transportable only by mobile equipment and gravity. Prior to this, ore processing plants were always built into the side of a hill, eliminating the need for horizontal transport by belt conveyor. In 1891, Thomas Edison experimented with flat belt conveyors similar to those used in the grain handling industry to move heavy, abrasive ore at his iron mine and processing complex in Ogdensburg, New Jersey. The belts were simply a cotton duck material. It soon became apparent that the cotton belts and wooden idlers were no match for the heavy and abrasive ore. Replacement of the belt and idlers became necessary on a one to two month cycle.

In that same year, Thomas Robins Sr. approached Mr. Edison and convinced him to try a cotton duck belt with a 1/8" rubber cover. Edison agreed and the new belt proved to be the wear solution. A working relationship began between the two inventors and Robins persuaded Edison to try a troughed belt configuration using spool shaped idlers to form the trough. This proved to be a failure because the upper edge of the spool moved at a higher speed than the base of the trough, causing damage to the underside of the belt from frictional resistance. The solution recommended by Robins was to break the spool into three independent cylindrical pulleys, each supported by a bearing at the ends of its shaft. These two innovations, the rubber belt covers and three roll idler, became the foundation for modern belt conveyor design and the origin of the Hewitt-Robins Company, a founding member of CEMA, in 1933.

In the ensuing years, the demand for higher capacities, longer runs, steeper conveying angles, and energy efficiency has led to new innovations and technologies. Belt conveyors with capacities reaching 44,000 tons per hour (44,000 ntph), lengths exceeding 30 miles (48km), horizontal curves, and inclinations to vertical are covered in this Seventh Edition. In addition, the costs per ton-mile to transport various materials are illustrated, based on proven experience at different operating sites. The technical information contained in this book is generally conservative in nature. Variations in specific application requirements or extreme service requirements should always be addressed by member company engineering personnel whose depth of experience exceeds that covered in this text.

In the first edition of this book, the Conveyor Equipment Manufacturers Association (CEMA) stated its objectives to make available the experience and technical knowledge of its members as a contribution toward the design and construction of conveyors of superior performance, and also to provide basic data and fundamentals of design for application to ordinary belt conveyor problems in order to achieve successful performance. Adhering to these same objectives, CEMA is pleased to offer this Seventh Edition of *Belt Conveyors for Bulk Materials.*

www.CEMANET.ORG We issue this pdf (1A) on 8-24-21 to Patricia Catalfol, Sue Law, Tulsa

This Page Left Intentionally Blank

WWW.CEMANET.ORG has issued this document (14604) on Apr 24, 2017 to Pattarapom Sritrakool, Suanluang,, , Thailand

Introduction	Pg 2
Conveying of a Variety of Materials	
Wide Range of Capacities	Pg 3
Adaptability to Path of Travel	Pg 4
Steep Angle Conveying	
Loading, Discharging, and Stockpiling Capabilities	Pg 6
Process Functions	Pg 7
Reliability and Availability	Pg 8
Environmental Advantages	
Safety	Pg 9
Low Labor Costs	
Low Power Costs	
Low Maintenance Costs	Pg 10
Long-Distance Transportation	
Conveyor Economics	
Feasibility Studies	Pg 12
Reduce After Purchase Costs	
Summary	Pg 13

WWW.CEMANET.ORG has issued this document (14604) on Apr 24, 2017 to Pattarapom Sritrakool, Suanluang, , , Thailand

INTRODUCTION

The subject of belt conveyors is of primary interest to engineers, managers, and others who are responsible for selecting equipment for handling bulk materials. This book is primarily a handbook, but Chapter 1 is included to acquaint the reader with the many uses of belt conveyors and their advantages under widely varying conditions of operation.

Belt conveyors have attained a dominant position in transporting bulk materials due to such inherent advantages as their economy and safety of operation, reliability, versatility, and practically unlimited range of capacities. In addition, they are suitable for performing numerous processing functions in connection with their normal purpose of providing a continuous flow of material between operations. Recently, their conformity to environmental requirements has provided a further incentive for selection of belt conveyors over other means of transportation.

Low labor and low energy requirements are fundamental with belt conveyors as compared with other means of transportation. Dramatic increases in operating costs continue to make conveyors an extremely favorable choice for applications that were not considered previously. Belt conveyor manufacturers have consistently anticipated the needs of industry with improvements in designs and with components that have exceeded all known requirements. Reliability and safety are outstanding now that stronger and more durable belts are available, as well as greatly improved components and highly sophisticated electrical controls and safety devices.

Illustrated and described in this chapter are some of the advantages of belt conveyors, which are performing a wide variety of intra-plant functions better and/or in a more innovative manner than is possible with other means of transporting bulk materials. Also included are examples of relatively long distance belt conveyor systems, which are being used extensively because they combine such important benefits as reliability, safety, and low cost per ton of material transportation.

CONVEYING OF A VARIETY OF MATERIALS

With proper selection of components and design of the transfers belt conveyors can transport a wide variety of materials. The size of materials that can be conveyed is limited by the width of the belt. Materials can range in size from very fine, such as dusty chemicals, to large, such as lump ore, stone, coal, or pulpwood logs. Closely sized or friable materials are carried with minimum degradation. Because rubber belts are highly resistant to corrosion and abrasion, maintenance costs are comparatively low when handling highly corrosive materials or those that are extremely abrasive, such as alumina and sinter. Materials that might cause sticking or packing if transported by other means are often handled successfully on belt conveyors. Even such hot materials as foundry shakeout sand, coke and iron ore pellets are conveyed successfully on heat resistant belts.

WWW.CEMANET.ORG | Personal use of this document (1466) is permitted, 2017 | Copyright © Sitraco Consulting, , Ireland

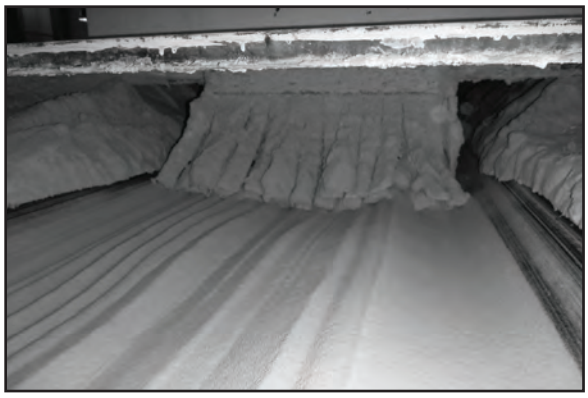

Figure 1.1
Detergent handled by conveyor



Figure 1.2
Bagasse handled by conveyor

WIDE RANGE OF CAPACITIES

Current available belt conveyors are capable of handling hourly capacities in excess of any practical requirement. Yet, they are also used economically in plants for transporting materials between process units at a wide range of rates. Capacities range from 44,000 tph (40,000 mtph) in open pit mining to less than 1 ton per hour in processing and packaging applications.

Belt conveyors operate continuously - around the clock and around the calendar when required - without loss of time for loading and unloading or empty return trips.

Scheduling and dispatching are unnecessary as the material is loaded to and unloaded from the belt conveyor automatically. Operating labor costs differ little, regardless of capacity ratings.

Overall costs per ton decrease dramatically, however, as annual tonnage handled increases. Such economic considerations are illustrated later in this chapter. For these reasons, belt conveyors are capable of handling tonnages of bulk materials that would be more costly and often impractical to transport by any other means.

www.CEMAnet.org - This document is (c)2017 to Aug 21, 2017 to pascal@cbm.com Sritai



Figure 1.3
High capacity belt



Figure 1.4
Seed corn conveyor

ADAPTABILITY TO PATH OF TRAVEL

Belt conveyor systems provide the means of transporting materials via the shortest distance between the required loading and unloading points by utilizing various and virtually endless combinations of straight and curved flights. Conventional troughed belt conveyors can follow existing terrain on grades of 30 to 35 percent, compared to the 6 to 10% effective limits for truck haulage or 2% for rail. Many conveyor designs and specialty belts are available for steep angle conveying up to 90 degrees. They can also convey material downhill while generating electricity that can be utilized to drive other equipment in the plant. They can be provided with enclosures, which prevent the escape of dust to the surrounding atmosphere and are weather protected. Such structures are economical and are adaptable to special requirements.

Belt conveyors provide a continuous flow of material while avoiding the confusion, delays, and safety hazards of rail and motor traffic in plants and other congested areas. Paths of travel can be quite flexible and the length of the routes can be extended repeatedly as required. In some open-pit mining operations, conveyors thousands of feet long are shifted laterally on the bench to follow the progress of excavation at the face.

Technology has advanced substantially in the design and application of horizontally curved belt conveyors. As a conveyor's total length increases, so does the probability that transfer stations will be required to avoid some obstacle in its straight-line path. Horizontal curves eliminate the constraints of the straight-line conveyor and reduce the installed and operating cost of the conveyor. Horizontally curved conveyors use conventionally troughed conveyor belts and standard components. The loaded and empty belt passes through the carry and return runs of the horizontal curve in unconstrained equilibrium by super-elevating the idlers. Horizontal curves may also be combined with convex and/or concave vertical curves to fit the conveyor to the most economical profile alignment. Curved conveyors further enhance the reliability, availability and environmental advantages of the standard belt conveyor by eliminating the infrastructure and dust control requirements at transfer stations.

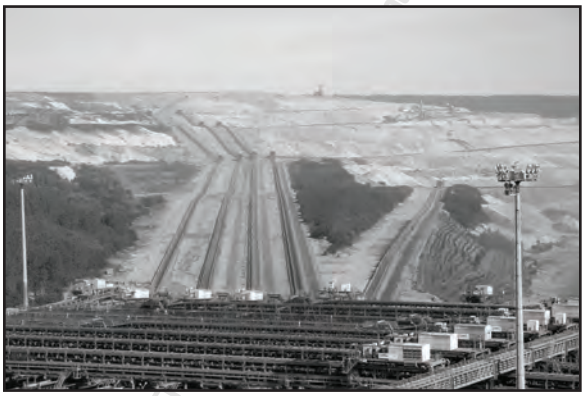

Figure 1.5
Open pit lignite mining



Figure 1.6
Path of travel

STEEP ANGLE CONVEYING

Characteristics of bulk materials such as density, effective angle of internal friction, lump size and shape, are all factors which dictate the maximum incline angle which material can be conveyed by a standard belt conveyor without having it roll or slip backwards on the belt.

CEMA Standard 550 lists maximum incline limits that conventional trough conveyors can safely convey various bulk materials. These maximum angles generally range from 10-30 degrees depending on

the bulk material. Recent developments in steep angle conveying increase this incline angle thereby enhancing the flexible path that standard belt conveyors can now negotiate.

Simply making the belt cover irregular will increase its ability to carry materials up slightly greater inclines. Most belt manufacturers capable of molding patterns up to 1 inch (25 mm) high into the top cover. Molded patterns for some materials only increase the maximum incline recommendations by five degrees over a smooth belt cover. Larger cleats can either be hot or cold bonded or mechanically fastened onto the belts' top cover after manufacture. These large cleats allow the conveying angle to increase to approximately 45 degrees. The conveying capacity drops off rapidly as the angle increases. Cleats are available in various sizes, shapes, and configurations with most allowing the belt to run in either a troughed or flat position. Cleated belts are usually restricted to short conveyors where few or no return idlers are needed and either the material does not stick to the surface or where the carryback is acceptable.

To improve on the cleat approach, corrugated sidewalls can be added to the transverse cleated belt to form complete rectangular partitions. These sidewalls and a transverse rigid belt carcass allow it to run flat without troughing idlers. The sidewalls also increase the load carrying capacity over the "cleat only" design and allow conveying up to 90 degree inclines.

One family of conveyors known as "pipe" or "tube" conveyors, "fold" belts, and "suspended" belts totally encloses the material with the belt, increasing the allowable angle of incline. In each case, the internal area of the enclosed belt is fixed, and therefore is capable of transporting material up steeper inclines only if the internal area is completely loaded with material. At a steep angle these conveyors are unable to completely unload the trailing end of a load when no additional material is coming along to "push" the load up.

A sandwich belt, in principle, totally encloses the material and applies pressure to secure it. A sandwich conveyor has a separately driven cover and carrying belts. The cover belt compresses the material against the carrying belt allowing a steeper conveying angles to be achieved. This insures that neither sliding nor rollback will occur, even when conveying vertically. Systems are available that use only standard conveyor belts and components and therefore have high availability and low maintenance. These systems permit high belt speeds resulting in high capacity capabilities. Consult with the respective CEMA Member manufacturers of steep angle belt conveyors for more information and specific applications.



Figure 1.7
Steep angle conveying



Figure 1.8
Steep angle conveying pocket belt

A variation of the conventional troughed conveyor is the Air Supported Conveyor. Air Supported Conveyors use a thin film of low pressure air to "float" the belt a small distance above a trough-shaped

pan, replacing the conventional idlers in the system. Both the carrying and return runs can be air supported and the entire conveyor can be enclosed. By eliminating most of the rotating components in the system maintenance is simplified. Air Supported Conveyors are attractive alternatives for applications where dust or contamination are critical issues.



Figure 1.9
Air supported conveyors being installed



Figure 1.10
Steep angle conveyors

LOADING, DISCHARGING, AND STOCKPILING CAPACITIES

Belt conveyors are very flexible in their capabilities for receiving material from one or more locations and delivering it to points or areas as required by plant flow sheets. They can provide the main transportation artery while being loaded at several points or anywhere along their length by equipment, which provides a uniform feed to the belt. They are particularly useful in tunnels beneath stockpiles, from which they can reclaim and, where required, blend materials from various piles. Material can simply be discharged over the head end of each conveyor or anywhere along its length by means of plows, stationary trippers or traveling trippers.



Figure 1.11
Loading under stockpile

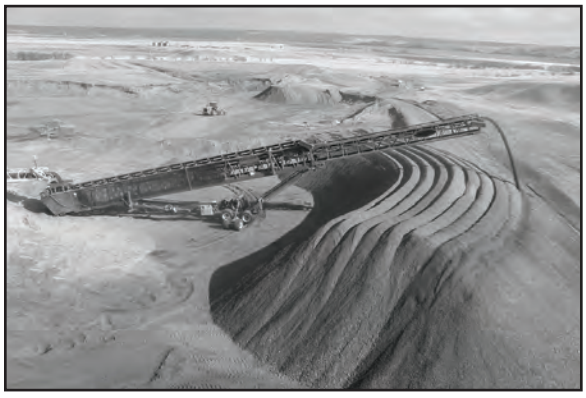

Figure 1.12
Discharging onto stockpile

Belt conveyors, with their stackers and reclaimers, have become the only practical means for large-scale stockpiling and reclaiming of such bulk materials as coal, ore, wood chips, and taconite pellets. Stockpiles over a mile long are common at major bulk material handling facilities.

Self-unloading ships and lake vessels equipped with belt conveyors can be unloaded in all ports, including those which do not have dock side unloading equipment. Unloading capacities of such systems are usually greater than those of several grab bucket unloaders, requiring less turnaround time and lower labor and other operating costs.

New developments in chute designs have reduced the dust and spillage often associated with transferring of bulk materials from belt to belt onto stockpiles and into bulk shipping conveyances. Telescoping chutes are used when the discharge height varies and curved chutes are frequently used for reducing dust and spillage at fixed transfer points.



Figure 1.13
Telescoping chute

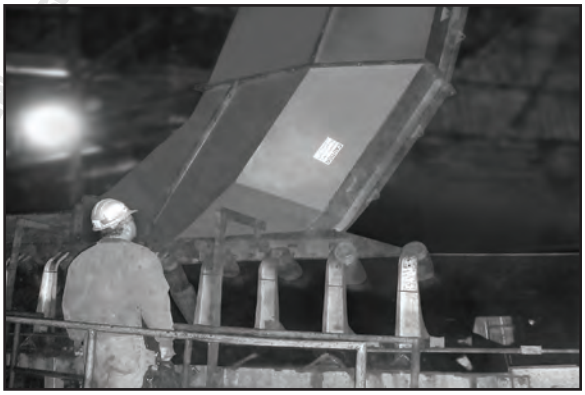

Figure 1.14
Engineered loading spoon

PROCESS FUNCTIONS

In contrast with high capacity unloading systems, certain materials, such as foundry sand, can be plowed from the belts at specific locations in quantities controlled by the requirements of the application. Although belt conveyors are generally used to transport and distribute materials, they are also used with auxiliary equipment for performing numerous functions during various stages of processing.



Figure 1.15
Sampler on conveyor

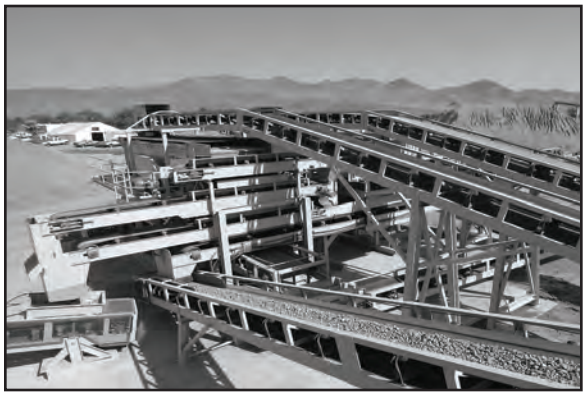

Figure 1.16
Screening process

A high degree of blending is accomplished as materials are bedded into and reclaimed from stockpiles. Accurate samples of the material conveyed can be obtained by devices, which cut through the stream of material as it flows from one conveyor to the next. Foreign objects can be removed from the material with magnets or by using various sensors and removal devices. While being transported on the conveyor, materials can also be weighed accurately and continuously or they can be sorted, picked, or sprayed. In

many cases, such operations are not only performed more effectively in connection with belt conveyors but are the only practical means.

RELIABILITY AND AVAILABILITY

The reliability of belt conveyors has been proven over decades and in practically every industry. Individual conveyors can be managed and maintained to have less than 2% unplanned outages due to mechanical or electrical failures. Multiple complex conveyor systems routinely operate at 90% mechanical and electrical availability. Operators can have a dramatic effect on the availability of conveyor systems, so their training is critical to a successful low cost operation. Conveyors can operate continuously for long periods of time. They serve vital process units whose very success depends on continuous operation, such as handling coal in power plants and transporting raw bulk materials in steel plants, cement plants, paper mills, and to and from ships in ports, where downtime is very costly. Belt conveyors are often controlled by computer and remotely monitored. They can be housed so that both they and the material being transported are protected from elements that would impede the movement of trucks and certain other means of transportation.



Figure 1.17
Reliability

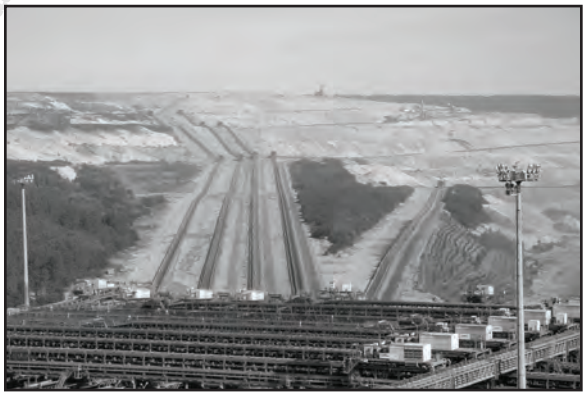

Figure 1.18
Availability

ENVIRONMENTAL ADVANTAGES

Belt conveyors can be more environmentally acceptable than other means of transporting bulk materials. Dust emissions from conveyors have been found to be less than 5% of the levels generated by trucking. They operate quietly, often in their own enclosures, which can be elevated or subterranean to reduce safety and environmental concerns. At transfers, dust can be contained within transfer chutes or collected with suitable equipment, if necessary. Overland belt conveyor systems can be designed to blend into the landscape, resulting in an unscathed, quiet, and pollution-free operation. Tubular galleries are becoming increasingly popular due to their long span capabilities, environmental features and aesthetics. Also the ability to shop assemble components reduces field erection costs. Air supported conveyors are used in many applications with sized material where controlling dust and noise are a priority. Air supported conveyors are easily totally enclosed. They are well suited for multiple loading applications and have fewer components to maintain than conventional conveyors. In addition, air supported conveyors offer energy savings on long horizontal runs.

Thailand



Figure 1.19
Loading and unloading over water



Figure 1.20
Enclosed tube conveyor over sensitive lands

www.CEMAnet.org This is not the document you requested (Apr 4 2017 10:26:26 Serapom Srirat)

SAFETY

Belt conveyors can operate with an extremely high degree of safety. Few personnel are required for operation and they are exposed to fewer hazards than with other means of haulage. Electrical safety devices such as pull cord switches, belt run-off switches, zero speed switches, and plugged chute switches are commonly required to be used on conveyors to provide protection to both personnel and equipment. Guarding of point hazards or the full length of the conveyor is practical and cost effective because of the modular construction of most conveyors.

LOW LABOR COSTS

Belt conveyors have low operating costs and often provide a higher return on investment than competitive methods. All functions of the system can be monitored from a central control panel or automatically controlled by computer, allowing a minimum number of operating personnel to inspect the equipment and report conditions that may require attention by the maintenance department.

The time required for maintenance personnel is also minimal. Most belts can be repaired or replaced in one shift. Many belts have conveyed well over 100 million tons before wearing out with only periodic planned down time for maintenance. Eight hours a week is a typical planned maintenance outage for high capacity continuous operation conveyors systems. Major overhauls of conveyor systems can usually be done in less time than required for primary process equipment repairs.

Conveyors are particularly well suited to predictive and preventative maintenance programs. Computer programs are available to assist in planning preventive maintenance based on manufacturers' recommended maintenance cycles. Automated monitoring systems can warn against pending failures by sensing increases in heat and noise of various mechanical elements in the system, allowing maintenance personnel to make immediate corrections thus avoiding potential downtime. Automated lubrication systems are easily adapted to conveyors to reduce manual lubrication labor.

LOW POWER COSTS

The increasing cost of energy emphasizes the importance of power and its relation to the cost per ton for transporting bulk materials. Because belt conveyors are operated by electric power, they are less affected by the prices, shortages, and other limitations of liquid fuel. They consume power only when they are being used. There is no need for empty return trips or idling in line for the next load. On long systems the declined portion often assists in propelling an inclined or horizontal portion. Some conveyor

systems are completely regenerative. In a typical conveyor system 80% of the energy is used to move and elevate the material and 20% used to move the belt, compared to 60% of the energy for haul trucks used to move the truck and 40% used to carry the bulk material. The cost of power for belt conveyor systems has always contributed to their extremely low operating costs, and this advantage has increased substantially with the rise in the cost of petroleum-based fuels. Even though they are economical to operate, power is a major portion of the cost of conveyor operation, and careful selection installation and maintenance of components can have a dramatic effect on energy usage.

LOW MAINTENANCE COSTS

Maintenance costs for belt conveyors are extremely low compared with most other means of transporting bulk materials. Extensive support systems, such as those commonly associated with truck haulage, are not required. The skills needed for maintaining conveyors are universal and basic in nature, so mechanics and electricians can do other maintenance tasks when not working on the conveyors. Because of the modular nature and standardization of belting and components, adequate inventories of spare parts can be maintained at a low cost and require relatively little storage space.

LONG-DISTANCE TRANSPORTATION

The economic benefits of low operating costs for labor and energy have led to a widespread adoption of belt conveyor systems as a means of transporting bulk materials over increasingly long distances. Not only were these systems the best investments at the time they were installed, but continuing escalation in costs of both labor and liquid fuel have greatly enhanced their present value. The longest single flight conveyor is 21.7 miles (35 km) in length, while the longest system with 11 flights is 62 miles (100 km) long with longer flights and systems planned.

CONVEYOR ECONOMICS

It is difficult to establish a cost per ton of material conveyed. There are a few "rules of thumb" that give a range of costs, but each conveyor installation must be evaluated individually. A few widely quoted rules of thumb are:

- An overland conveyor operation is more economical than truck haulage if the conveying distance exceeds 0.6 miles (1 km).
- Beyond 0.6 miles (1 km) distance the ton-mile cost of transport by belt conveyor may be as low as one-tenth the cost by haul truck.
- Estimated operating maintenance cost per year for a belt conveyor is 2% of the purchase cost of equipment plus 5% of the belt cost.
- Belt replacement on average is every five years for hard rock applications and up to 15 years for non-abrasive applications.
- Well maintained conveyor systems can reliably operate at 90% or higher availability.

Rail and truck is often used to move bulk materials. Energy usage between modes of transport is often compared in terms of the amount of energy to transport one ton one mile or one kilometer. One source compares the energy required to transport one ton of coal between rail, truck and an overland conveyor as:

- Truck: 3.2 ton-miles/kWh (4.6 metric ton-km/kWh)
- Rail: 12.0 ton-miles/kWh (17.7 metric ton-km/kWh)
- Conveyor: 15.6 ton-miles/kWh (22.9 metric ton-km/kWh)

www.SAMATOR.com.tw Test PR document (2004) on XXX - Powered by Qatar (DPI Strand) Suanluen, Thailand

An assessment of owning and operating costs is essential whenever conveyor systems are considered in lieu of other means of bulk material transportation. The assessment should include the capital cost of all comparative systems, fuel or electrical costs, labor costs for maintenance and operations, parts inventories required, depreciation, and interest, taxes, and insurance. Site and transport route specifics are often overriding factors in establishing the capital and operating costs of haulage.

In order to make a true cost comparison between two or more haulage systems, all costs chargeable to each system must be considered, including ancillary facilities required for each system. For example, crushing facilities might be required to reduce lump size for handling on the belt conveyor but would not be necessary for truck haulage. Conversely, a very large shop with extensive special equipment would be required for a fleet of trucks whereas only relatively inexpensive equipment is necessary for servicing the small components of a belt conveyor. Also, the effect of inflation and added investment for additional or replacement equipment and facilities must be considered.

The most common financial tools for evaluating different haulage options are Internal Rate of Return, IRR, and Net Present Value, NPV. Even though a financial analysis may indicate an advantage of one system over another, the more economical plan may require an initial investment, which is higher than the alternate plan or the allotted capital. When justifying projects, costs are sometimes moved from capital to future operating costs, but seldom do real operating budgets reflect the full effect of these manipulations of the figures resulting in less than desired results. While conveyors are robust in design, relatively safe to operate and environmentally friendly, they do require competent operation and regular skilled maintenance to remain so.

If unplanned business interruption, accidents, injury, or death intercede, this impacts the premise of the original justification. Rather than being discouraged by these possibilities it is better to address them head on.

Maximizing shareholder value normally drives choice. When a particular belt conveyor system is selected it is because there is hope that it will contribute more to profit than an alternative investment. When the decision to commit to a project is made the purchase price becomes the primary focus of negotiations. Price is paramount. Price is often the most obvious thing in a contract, whereas the quality of a product is rather more intangible. There are many disciplines that must be involved for the completion of a successful project. Each discipline sees the project differently and has particular information needs. The owner has to strike a balance between capital cost and operating costs. The engineer has to consider numerous design decisions and their effect on meeting codes, safety, quality, and performance. The equipment manufacturers have to achieve a fine balance between cost and quality. Each will do a better job by understanding the whole picture, and objectives need not be in conflict. By careful execution all interests are better served.

Converting systems from batch haulage (trucks, trains, and boats) to belt conveyors must take into account both belt conveyor limitations and advantages. Belt conveyors demand sized material fed at an even rate for optimum utilization. Changes in process are frequently needed. These changes need not be a disadvantage if a process requires continuous flow. What at first is a disadvantage can be built into an advantage. For example, large feed hoppers to accommodate batches can be re-sized to fit the more steady flow from smaller wheel loaders and belt conveyors.

www.SEMINARSnet Seminar (1604) on Apr 24, 2014 (1 participants shared simultaneously, , Wilkie

FEASIBILITY STUDIES

The purpose of a feasibility study is to predetermine profitability of a proposal. The cost of a typical feasibility study will be in a range from 0.5% to 1.5% of the total estimated project cost. While owners are most interested in overall profitability within any plan, there are always options. Where alternatives involve different ways of moving material, a haulage feasibility study should be considered. Normally such studies can be time consuming and a multi-month effort is not unusual. Because there are so many variables and the input data is often extrapolated from less than comparable projects, a Monte Carlo simulation may be useful in selecting the final layout and major components.

REDUCE AFTER PURCHASE COSTS

Too often the real cost of belt conveyors has little to do with price or the results envisioned in a feasibility study. Significant costs that may come after the price is paid can outweigh by many times the original purchase price. After purchase costs can result from:

- Mechanical failure
- Failure to perform contractually
- Poor design
- Poor operating practices
- Poor safety and housekeeping
- Environmental violations
- Poor maintenance
- Changes in the bulk material properties or throughput

Attempting to effectively correct these types of problems later is extremely difficult. Costs that are designed in go on forever. Dealing with these issues is discussed throughout the book.

At constant quality, any belt conveyor can be built in virtually millions of different design and component combinations. The cost of fabricated steel and the conveyor belt are most often the largest two costs of a conveyor. Efficient design of the belt and conveyor structure is essential. Determining the price of a belt conveyor system is essential to business or market planning. Price is not necessarily a measure of quality and frequently added quality can be obtained at a lower price. A fine balance must be reached between quality and price or commercial traffic would never occur. Finding the least cost solution while meeting quality requirements is the proper objective.

The mundane work of cleaning up spillage frequently incurs the biggest unplanned operating cost of belt conveyors. It is less costly to fix problems during the design stage than live with heavy maintenance and cleaning costs for the life of the conveyor. Percent of belt sag is the one design criteria that has a specific bearing on spillage. It used to be that 3% belt sag between carrying idlers was an acceptable limit while today 2% sag is often specified. Designs approaching 0% sag in the load zone are accepted practice achieved through the use of specially designed idlers or slider beds. Cleaning costs can be controlled by eliminating dust and minimizing carryback. Chapter 11 goes into more detail on the accessories that can be added to a conveyor to reduce the costs of cleanup due to dust, carryback and spillage.

www.CEMAnet.org Licensed Publication (#904) Mar 24, 2017 to Pattarapom Sriwatana, Summary Proof

SUMMARY

Belt conveyors are a very economical, safe, and environmentally friendly haulage solution. The capital and operating cost for each conveyor application is so dependent on the specific requirements and constraints of the application that it is impossible to give even a range of costs expressed in dollars per ton per mile hauled. Designing major belt conveyor installations for bulk material handling requires a great deal of experience and engineering know how. CEMA Members will be glad to aid the reader further by furnishing additional data, estimates, and proposals.

WWW.CEMANET.ORG has issued this document (14604) on Apr 24, 2017 to Pattarapom Sritrakool, Suanfarm, (retail)

WWW.CEMANET.ORG has issued this document (1460) on Apr 24, 2017 to Pattarapom Sritrakool, Suanluang, , , Thailand

This Page Left Intentionally Blank

Introduction Pg 17
Conveyor Arrangements
Basic Flat and Troughed Belt Conveyor Paths Pg 18
Belt Conveyor Loading and Discharge Arrangements Pg 22
Conveyor Structures
- Structure Widths
- Carrying and Return Run Structure
- Main Pulley and Drive Components Structure
- Other Considerations for Structure Spacing

Types of Structures Pg 23
- Stringers
- Trusses
- Tubular Galleries
- Portals
- Towers and Bents
- Frames and Bases
- Foundations
- Anchor Bolts and Base Plates

Connections Pg 27
- Bolts
- Welds
- Pins
- Expansion Joints

Codes And Standards Pg 28
- United States
- Canada
- Mexico

Design Pg 32
- Allowable Stress Design
- Load and Resistance Factor Design
- Vibration
- Deflection
- Buckling
- Materials
- Miscellaneous

WWW.CEMANET.ORG has issued this document (2640) on 4/4/2017 to Pattarapom Sirirat Dr. Suanluang, Thailand

Loads Pg 35
- Dead Loads
- Live Loads
  - Bulk Material Loads
  - Piping and Conduit Loads
  - Spillage Loads
  - Walkway and Ladder Live Loads
  - Plugged Chute Loads
  - Belt Tension Loads
- Environmental Loads
  - Expansion Loads
  - Water, Snow and Ice Loads
  - Wind Loads
  - Seismic Loads
  - Stockpile Loads
- Dynamic Loads
- Future Load Allowances
- Load Combinations

Corrosion Protection Pg 40
- Paint
- Galvanizing
- Corrosion Resistant Steels
- Alternate Materials and Methods

Maintenance Pg 42
- Access Requirements

Crossovers and Crossunders Pg 47

The Long Term Effects of Design Decisions Pg 47
- Upgrading
- Redundancy
- Capital Vs. Operating Costs

WWW.CEMANET.ORG has issued this document (1004) on Apr 2, 2017 to Pattarajam Sritrakool, Sriracha, , , Thailand

INTRODUCTION

It is the goal of this chapter to introduce configurations and combinations of belt conveyors commonly chosen for use in bulk material handling, and to discuss related design considerations that affect the overall effectiveness of belt conveyor systems. In this chapter there are structural, clearance and access design recommendations that, when properly incorporated, will result in a conveyor system that is cost effective to operate and maintain. Designing a conveyor system is always a trade-off between various options and their effects on the total cost of ownership. An experienced CEMA Member conveyor engineer should be consulted at the beginning of any project to assist in giving adequate consideration to the implications of decisions regarding conveyance path, structure, clearance, and access.

CONVEYOR ARRANGEMENTS

Belt conveyors can be arranged to follow an infinite number of profiles or paths of travel. Among these are conveyors which are horizontal, inclined or declined; with the inclusion of concave, convex or horizontal curves in any combination. Horizontal curves are covered in more detail in Chapter 9. In addition, there are many specialized adaptations of the basic belt conveyor such as pipe conveyors and steep angle conveyors which allow steeper conveying or tighter curves, which are discussed in Chapters 10 and 16. Numerous arrangements are possible for loading to and discharging from the conveyor, which are discussed in Chapter 12.

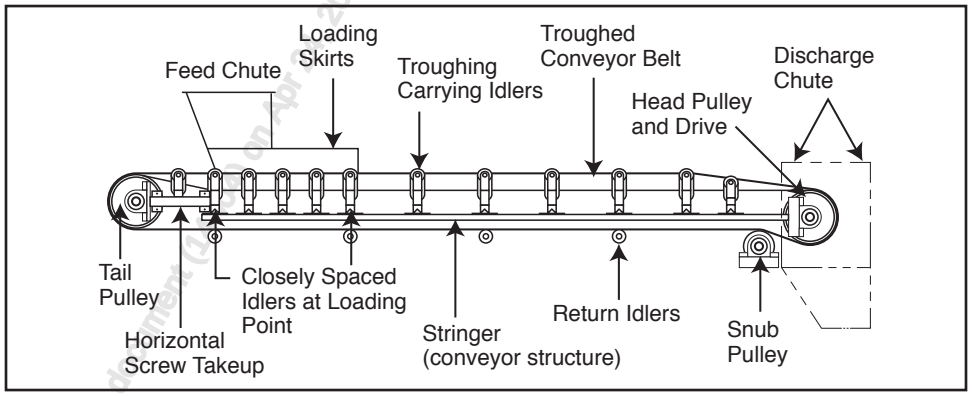

Figure 2.1
Nomenclature of a typical troughed belt conveyor

The nomenclature of typical belt conveyor components is illustrated in Figure 2.1. Basic troughed belt arrangements are illustrated in figures 2.2 through 2.11. Almost all configurations, and resulting calculations, originate from combinations of these basic arrangements. Belt conveyors can be connected to a mainline conveyor to stockpile material on either or both sides, into piles of any practical length. A stacker-reclaimer can be used to stockpile material, or to reclaim and return it to the main belt conveyors.

Belt conveyors can be designed for practically any desired path of travel, limited only by the strength of the belt, angle of incline or decline, or available space. Some arrangements are more desirable than others. For example, transfers between conveyors should be minimized due to additional wear on the belts at the loading points, unnecessary additional fugitive material release, and possible plugging in the transfer chutes.

www.CEMANET.org - Purchased by [illegible] on Apr 6 2017 for Personal use only, Multiple User, Tagged

BASIC FLAT AND TROUGHED BELT CONVEYOR TRAVEL PATHS

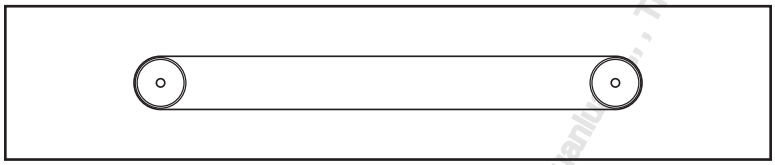

Figure 2.2
Horizontal conveyor path

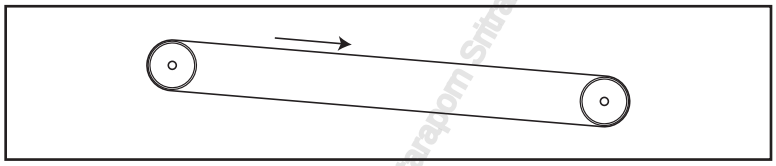

Figure 2.3
Descending conveyor path

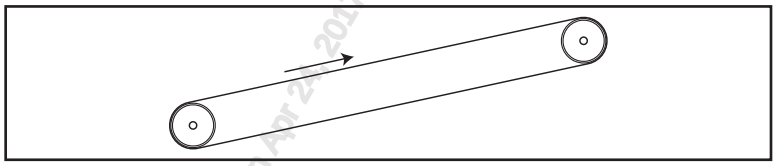

Figure 2.4
Ascending conveyor path

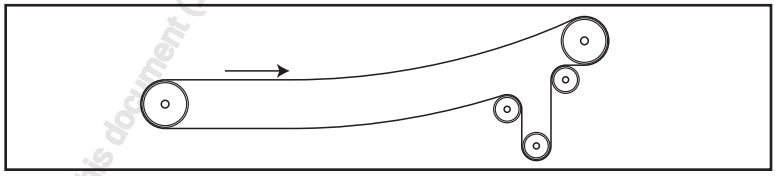

Figure 2.5
Concave vertical curve conveyor path with gravity takeup

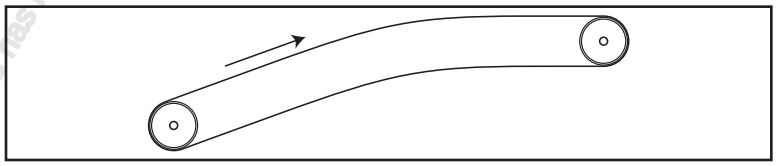

Figure 2.6
Convex vertical curve conveyor path

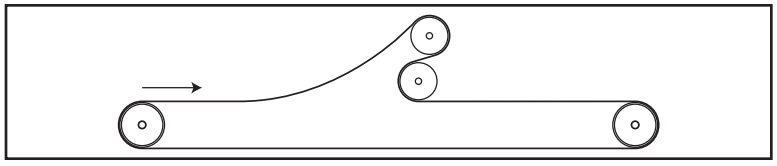

Figure 2.7
Tripper or booster drive conveyor path

WWW.CEMANET.ORG has issued this document (1468) on Apr 24, 2017 to Pattarapom Sritrakool, Stanley , , Thailand

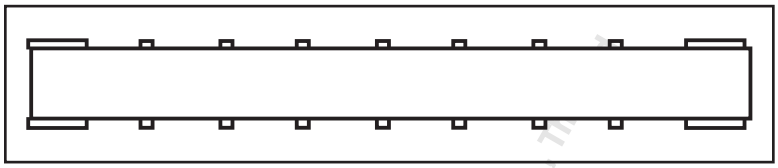

Figure 2.8
Linear conveyor path

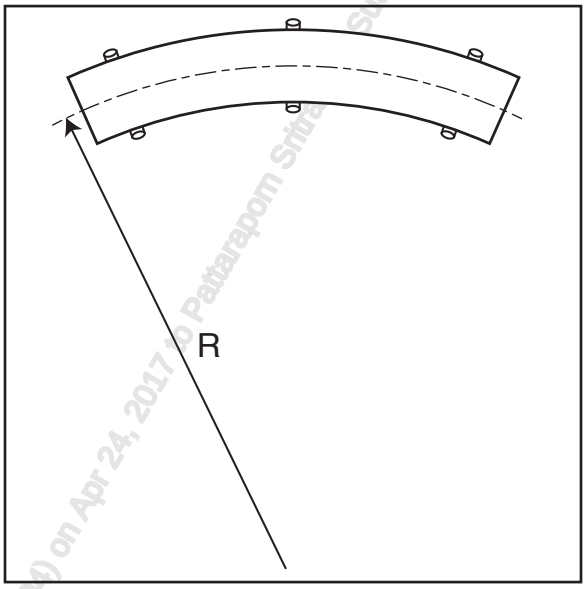

Figure 2.9
Horizontal curve conveyor path

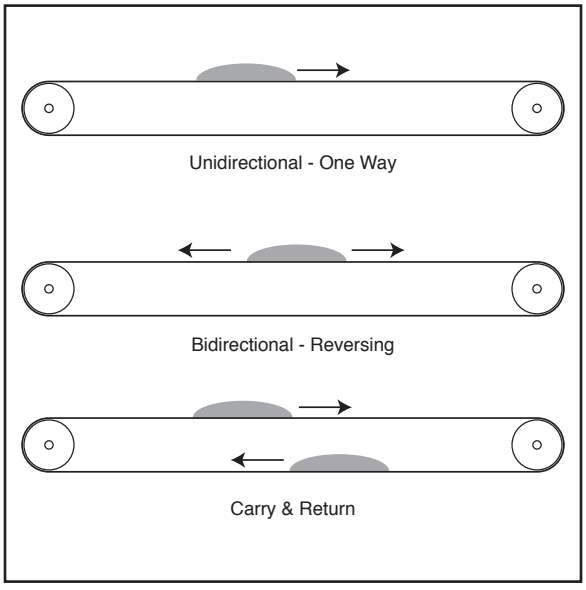

Figure 2.10
Directional carrying capabilities of conveyors

WWW.CEMANET.ORG has issued this document (1.0.0) on Apr 24, 2017 to Pattarapom Sritanyaluang, Stanluang, Thailand

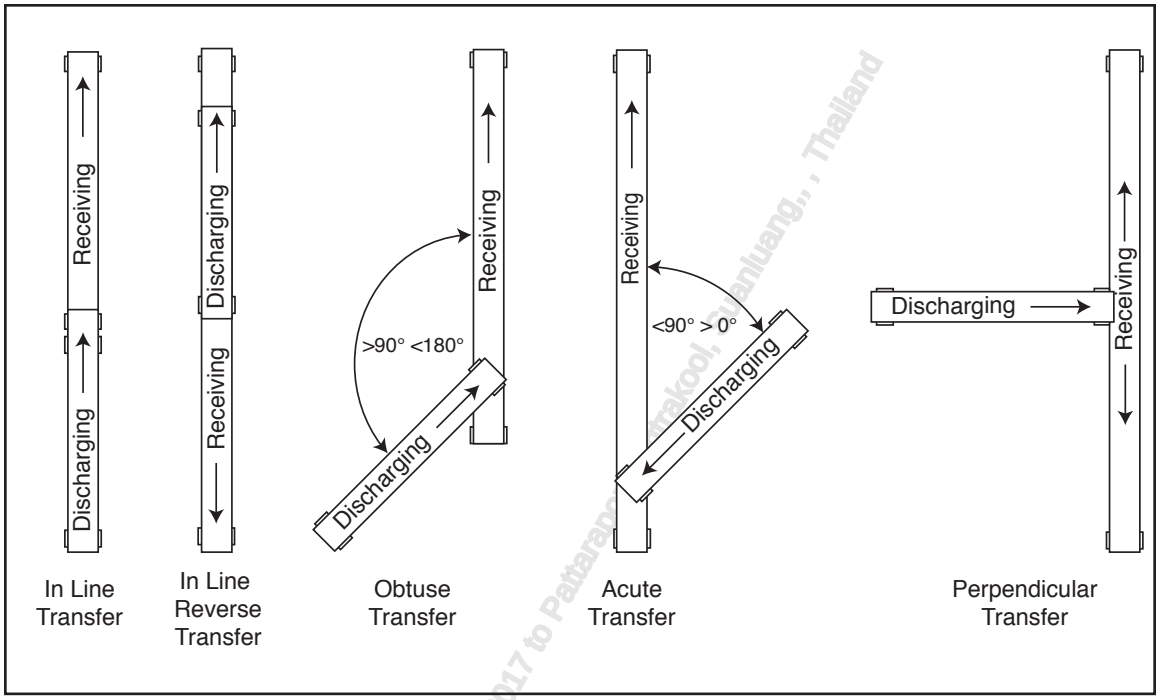

Figure 2.11
Transferring conveyor angles

Many factors determine the transfer angle and the resulting design of the chute for smooth flow from discharging to receiving belt. In general, transfer chutes with in line transfers are the best for smooth continuous flow followed by obtuse transfers and then perpendicular transfers. Acute transfers are typically the most difficult to design.

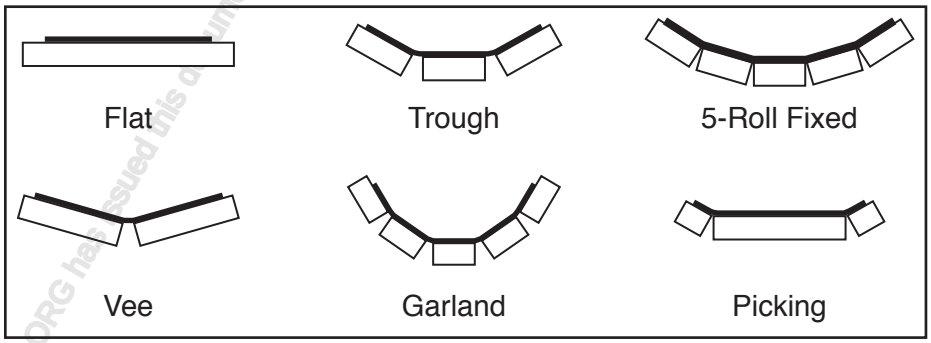

Figure 2.12
Cross section conveyor belt profiles

The basic paths, directions and profiles can be combined into an unlimited number of straight and curved flights to accommodate almost any requirement. Belts can carry cargo on both the upper and lower runs. The load carrying capacity of belt conveyors has an extremely large range from one pound or kilogram an hour to tens of thousands of tons per hour. For those applications where basic belt conveyors are not well suited, there are a number of specialized designs.

CEMA-MAIL.ORG has issued this document (1466) on Apr 24, 2017 to Pattarapol Prakool, Ruanluang, , , Thailand



Figure 2.13
Pipe conveyors with complex paths



Figure 2.14
Troughed conveyor complex path

The proper arrangement of transfers between two conveyors is an important part of a system design. There must be enough height between the discharge pulley and the receiving conveyor for the proper flow of the material, including material collected from the belt cleaners. The transfer design becomes more complex when multiple material flow paths are required Many transfers have been built with insufficient head room, which leads to recurring problems such as excessive spillage, off center loading on the receiving belt and maintenance complications.



Figure 2.15
Stockpile drag style conveyor loader



Figure 2.16
Ship loader with telescoping loading spout

BELT CONVEYOR LOADING AND DISCHARGE ARRANGEMENTS

The feed conveyor should not be elevated more than the minimum height necessary for a satisfactory transfer and access. A greater transfer height requires more power to elevate the bulk material. The additional power absorbed due to excessive transfer height is dissipated as impact, abrasion, degradation, noise and dust generation.

The amount of belt separation required in the plan view depends on the horizontal offset of the conveyors, when the orientation is not in-line. The further the horizontal distance between discharge pulley and load zone, the greater the required vertical separation.

Chapter 12 discusses troughed and flat belt transfers from belt to belt. Chapter 10 covers the loading and discharge of specialized conveyors for steep angle conveying. The loading and discharge of a conveyor belt requires close attention in the design phase to reduce the problems of releasing fugitive materials, excessive chute and belt wear, and reduced capacity due to chute build up and plugging.

CONVEYOR STRUCTURES

This section presents general guidelines for designing support structures and foundations for belt conveyors, which serve only as a basic introduction to familiarize project managers, engineers, and designers with important issues and common practices in use in the bulk material handling industry. These guidelines are not intended to be a substitute for any applicable codes or standards. In general, all supporting structures should be designed to allow for proper operation of belt conveyors while addressing many issues such as economy, fabrication, shipping, installation, alignment, deflection, loads, safety, access, clearances, clean-up, corrosion, routing of utilities, weather protection, and maintenance.

Structure Widths

The spacing of the main support elements for conveyor components is divided into two general categories. The first is the structure supporting the carrying and return run of the conveyor. The second is the structure supporting main pulleys and drive components.

Carrying And Return Run Structure

For the carrying and return run structure the spacing of the structure is typically governed by the idler bolt hole dimension, A, and the clearance dimension, C, given in CEMA Standard 502, latest edition. These dimensions vary by CEMA idler class, belt width and idler base. Within each CEMA idler class the roll diameter does not affect dimension C, but the belt width may. There are two idler base designations; standard and wide. The actual location of the support will be determined by the structural shape and the practical location for the idler mounting holes. The idler clearance dimension can be used as a guide for the outside dimension of the support structure.

www.CEMANET.org (1464) Provided to Patrapan Suraksa, Chanuary 2, Thailand

Main Pulley And Drive Components Structure

The spacing of the structures in these areas of the conveyor is determined by the size and shape of the structural elements based on design loads and the bolt hole patterns of the main bearings. The most current revisions of ANSI/CEMA standards B105.1 and 501.1 give standard dimensions for many pulley applications. However, engineered pulleys of custom dimensions are often required for main pulleys. There is no standard clearance dimension between the pulley edge and the chute wall, although common practice is to allow a minimum of pulley face width plus 4 inches (100 mm) for the inside dimension of the chute.

Other Considerations For Structure Spacing

One of the most useful features of belt conveyors is their ability to be adapted to almost any type of design constraint. Many other factors influence the spacing of conveyor structures. Many structures include integral walk ways for access. Structures are often designed to accommodate key process equipment and conveyor structures are secondary. Mobile and marine conveyors must be light weight and compact. The overall weight of the conveyor, structure and accumulated spillage is of prime importance for conveyor booms used on stackers.

TYPES OF STRUCTURES

This section presents an overview of various structure types that are typically used to support belt conveyor systems. Belt conveyor systems may be installed on portable equipment, on movable structures, or on permanent structures. Regardless of the type of installation, the structural design must properly support the conveyor, personnel and environmental loads. In addition, the structural support must be rigid enough to prevent undue movements or rotations of the belt system that will result in belt alignment, wear, and spillage problems.

Stringers

Stringer supported conveyors are often found at or near grade, with short beam supported sections of conveyors supported by closely spaced foundations. Standard steel channel sections are often used as beams. Figure 2.16 presents a typical stringer supported cross section. If the belt profile is a short distance above grade, stringer supported sections often do not have attached maintenance walkways.

A stringer or beam supported belt conveyor system is not limited to short segments built at grade. Longer spans without intermediate supports can be achieved using steel wide flange sections. When shapes other than channel sections are used, the spacing may vary from the standard spacing for channel sections to accommodate bearing and idler bolt hole patterns. Precast concrete members may also be used to construct longer spans. Sawn or glued-laminated timbers have been used for stringer sections, and the use of timber may be advantageous when handling certain corrosive bulk materials such as salt.

The structural designer must be aware that the stringers and their foundations must support all of the forces acting on the conveyor system. Properly designed lateral and longitudinal bracing may be necessary to resist loads that act upon the stringer structure.

www.SEAMEO.org Ms Ieuan Lubdocument (SEAMEO Regional Open Learning Center) 2017 Bangkok, Sriracha - Thailand



Figure 2.17
Stringer style structure



Figure 2.18
Box truss style structure

www.BMHT.org Unauthorized Document (1460) Sept 24, 2017 to Patr

Trusses

For longer spans, steel trusses have long been employed to support belt conveyors. When compared to a beam or stringer type of construction for long spans, a fabricated truss of steel members can be considerably lighter and less expensive. Various truss configurations have been employed, with the "Pratt" type of truss being historically the most popular. In a simple span "Pratt" truss, the vertical members are typically in compression, while the longer diagonal members are in tension. Long-span, cold-formed steel joists may also be appropriate for use as conveyor support trusses.

Steel trusses for the support of belt conveyors are typically of two types: a box or deck truss, as shown in Figure 2.18, or a gallery or walk-through enclosed truss, shown in Figure 2.19. Box trusses are typically used for intermediate length spans. Common spans for box trusses are 40 to 80 ft (12 to 24 m) although spans of over 100 ft (30 m) are not uncommon.

For longer spans, gallery trusses require less structural depth under the conveyor, which can be an advantage when clearing obstructions such as highways or power lines. Gallery trusses are often employed for longer spans and spans of up to 200 ft (60 m) are common. They have the further advantage that they can be partially or fully enclosed so the conveyor is protected from the wind and all spillage is contained within the gallery.

The truss designer should be aware of the need for properly designed lateral force resisting systems. In-plane bracing is typically employed in the top and bottom chords of the truss, with box trusses often having diagonal bracing across the section of the truss. For both types of truss, the transfer of lateral forces at the conveyor support points will likely require that a stiffened portal section be employed.

Tubular Galleries

Enclosed tubular gallery structures, as shown in Figure 2.20, may also be used to support and enclose a belt conveyor. Both custom designed and proprietary manufactured systems are available. The thin shell steel tube serves as both the supporting structure and the conveyor enclosure, creating a strong and attractive conveyor system.

The designer of an enclosed gallery should consider the possibility that spillage or other materials may collect in the bottom of the tube, creating a large unintended weight that must be supported. Ventilation of the gallery may also be a design consideration.

Care must be taken in the support of the conveyor and walkway inside the tubular gallery. Supports can create concentrated loads, which must be distributed into the thin shell tube without distortion or overstress. In addition, the tube must be held round to properly transfer the stresses. Both of these structural issues are typically solved by stiffeners around the tube placed at appropriate spacing along the tube. These stiffeners can be plate, bar, rolled angles, or rolled tees.

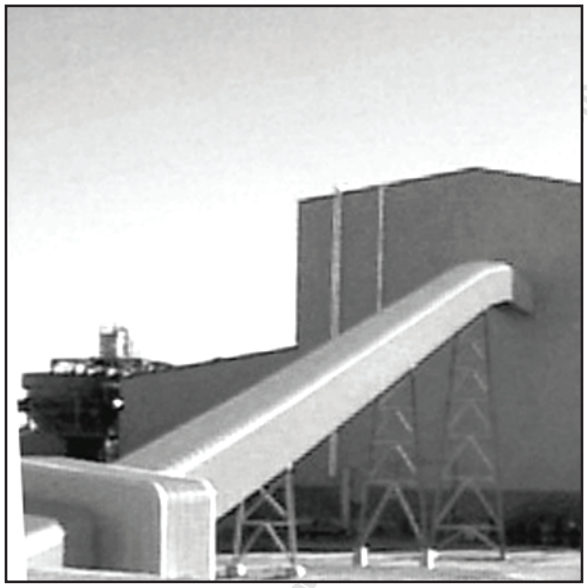

Figure 2.19
Gallery style structure with bent supports



Figure 2.20
Tubular style conveyor galleries

Portals

Elevated conveyor structures, be they constructed using stringers, trusses, or enclosed galleries, may be supported directly on foundations, or by bents and towers. The loads that are placed on the stringers, trusses and galleries are transferred to the bents or towers, from where the loads are transferred to the foundation level. A stiffened structure section, commonly called a portal, is usually required at the load transmitting location to prevent a truss from racking, or twisting out of alignment. With an enclosed tubular gallery, a stiffened ring or collar is usually provided at these locations for similar reasons.

Towers And Bents

The vertical structural elements that support an elevated belt conveyor are often classified as bents and towers. Both can be constructed of structural steel or reinforced concrete. Hollow concrete tubes or metal tubes can be used for conveyor supports, and are especially useful when piles of material are stacked beneath the conveyor or space is limited.

A bent is a vertical frame that supports the conveyor vertically and provides lateral load resistance perpendicular to the belt, but is free to move or rotate in a direction parallel to the belt. A bent is typically a two-legged steel structure with bracing between the two legs. Bents therefore depend upon the

www.PEMBET.com has licensed this document to Sritrakool, Sumrarn, Thailand

longitudinal stiffness of the truss or gallery above to provide stability. The erection of bents must account for the instability of the structure when the truss or gallery has not yet been erected.

In general, a tower is a structure that provides lateral support both transverse and longitudinal to the conveyor. Four-legged steel structures, sometimes called a four-legged bent, are commonly used. Towers are often are placed at transfer points, belt takeup locations or conveyor drive platforms to take advantage of both the strength and footprint of the tower. For bents in excess of 100 ft (30 m) it is often more economical to use a four-legged tower rather than a two-legged bent. Because a tower is fixed longitudinally and the conveyor truss or gallery moves longitudinally due to temperature expansion and contraction, a sliding joint is required.

Frames And Bases

The conveyor support structure must often support frames and bases for mechanical equipment, such as the conveyor drive motor and reducer. The structural design of these sections must account for not only the loads of the equipment, but also resist the movements and torques induced by moving parts. The structural designer should coordinate closely with the equipment supplier to ensure the appropriate design and to coordinate anchor bolt placement, clearance requirements, and other equipment related requirements.

Foundations

All of the dead loads and external loads that are applied to conveyor systems are eventually resisted by the ground. Internal forces, such as the belt tension, may be self-contained within the structure, or supported by the foundations, depending upon the structural arrangement.

The conveyor designer must consider the stability of the structure and design adequate foundations to achieve stability. Care must be taken to ensure that the foundation system has capacity for any uplift or overturning of the towers or bents. The conveyor must have a foundation at the ground or a tie to a tower capable of resisting longitudinal forces in the conveyor.

The foundations placed under a belt conveyor system will depend upon the nature of the soils found at the site. It is essential that an investigation by a qualified geotechnical engineer be performed in order to determine the type of foundation most appropriate for the site and the applied conveyor loadings and anticipated settlements. Shallow concrete spread foundations or deep foundations utilizing piles or caissons may be necessary, depending upon the soil conditions and applied loads.

The foundation and structure designer should be aware that foundation settlement, especially differential foundation settlement, can be hazardous to the conveyor support structure. Some designs are more tolerant of differential settlement than others. For example, a series of simply supported trusses between bents would be recommended over a continuous truss in cases where large differential settlements are anticipated. Settlement can cause serious problems such as belt alignment and wear, overstressing structural members, or even structural failure.

Anchor Bolts And Base Plates

Steel anchor bolts are typically provided to attach conveyor structures to the concrete foundation. A steel base plate is usually provided between the bottom of the structure and the concrete foundation surface in order to distribute the structural load over a larger area of concrete. A layer of grout is typically placed between the structure and foundation to serve as a leveling course. Keyways, mated with steel lugs and grout, provide help resisting large shear forces without overstressing the anchor bolts.

www.CEMATOP.co.il Che Israel Bis Drumot 1 (1450) of Ap; 4; 2017 to Patterson Pantakool, Standard - Thailand

Anchor bolts, keyways and base plates must be designed to resist the horizontal shears and uplift forces that the structure imparts to the foundation. The anchor bolts and keyways must be properly designed and anchored sufficiently within the concrete foundation in order to be effective in resisting the design forces without causing break out of the concrete foundation.

CONNECTIONS

Structures are typically fabricated in subassemblies that must be connected together to form the whole. Connections can be classified as shop or field connections, depending upon the location where the connection is made. The choice of shop or field connections and the types of connection to be employed may be the responsibility of the structure designer, the fabricator, or other members of the design team. If the design of the structural connections is delegated to the structural fabricator, the designer must be sure to indicate the magnitude of forces for which the connections are to be designed. The most economical designs typically consider the complimentary capabilities of both the fabricator and the steel erector.

Historically, structural connections are often the "weak link" in a structural system. The structural designer and detailer should be aware of the potential for errors in this area. In addition, designers and detailers should be aware of the creation of inadvertent prying forces or moments on connections due to eccentricities of truss members or the connections.

Bolts

Structural bolts are used for many connections in steel structures. Bolted connections may be used in the shop or in the field, but are especially common in field applications, with the appropriate bolt hole tolerances provided in the steel members in the shop. In some cases, slip critical connections are necessary for durability or meeting seismic requirements. Bolted connections should be designed, detailed and installed per the requirements of the American Institute of Steel Construction (AISC).

Welds

Welded steel connections are also common in both the shop and field. It is common to use welded connections for shop fabrication, where the welding can be performed in a closely monitored environment, and to use field bolting to provide the final connection between shop-welded subassemblies. Welded connections should be designed, detailed and placed per the requirements of the American Welding Society (AWS).

Pins

Pinned joints are used in situations where it is necessary for one structure or structural element to rotate independently of another element to which it is connected. Pinned joints typically consist of a round shaft, with the structural members free to rotate about the shaft. Structures on bodies of water that must rise and fall with changes in water level often employ pinned joints at support points.

AISC provides design provisions for pinned joints. Structural details at pinned joints should be arranged to allow for free movement of the structure throughout its intended range of rotation, and to prevent the collection of debris or spillage at the pin that could hinder its function.

WWW.NEMA.ORG has issued this document (3469) on Apr 24, 2017 to Patrapon Sirisomboon (Siam Steel Group, , Thailand)

Expansion Joints

Expansion joints are required in most belt conveyor applications to accommodate thermal expansion and contraction. Expansion joints may also be installed to provide for movement at specific points due to wind or other external forces on the structural system. Custom designed and proprietary expansion joints are available.

Structural details at expansion joints, similar to pinned joints, should be arranged to provide for free movement of the structure throughout its intended range of motion. Unanticipated forces and moments can be induced into a structure and cause damage when expansion joints are not free to provide the necessary freedom of movement. The structural details should prevent the collection of debris or spillage at the joint that can hinder or prevent the joint from functioning.

CODES AND STANDARDS

Tables 2.21, 2.22 and 2.23 list several organizations which publish codes, standards, and recommendations affecting many issues and requirements relating to the design of belt conveyor support systems.

United States

Legal requirements for construction are defined by the building code that is adopted by the authority having jurisdiction (AHJ). Typically this will be a state, county or city building code. The governing codes and standards will be defined in the code. Changes in codes can have significant impact on structural requirements. Codes are updated every few years, so for projects with multiple phases or extended design time it is necessary for the designer to coordinate with the AHJ.

The local code will typically refer to a specific national or international building code that will be the governing code, usually with amendments as defined in the local building code. The local building code will then define which editions of governing codes and standards are applicable.

As an example, one local building code might use the 2006 edition of the International Building Code as the governing code, which refers to ASCE 7-05 for the environmental (snow, wind, earthquake, etc.) loads and AISC Specification for Structural Steel Buildings March 9, 2005 for structural steel design. Another local building code might refer to the 1997 UBC as the governing code. This code includes it own criteria for environmental loads, and refers to AISC Specification for Structural Steel Buildings - Allowable Stress Design and Plastic Design, June 1 1989 for structural steel design. Most environmental load categories will not vary significantly between the different building codes, but the means of calculating the different load conditions may vary, depending on the governing authority for the project.

Building codes will govern such things as building classification, allowable types of construction for different classifications, fire ratings, requirements for sprinkler systems, maximum distances between exits, and requirements for hardware on the exits, to give a few examples. Often, much of this information will be established by the engineer having overall project responsibility, and the conveyor designer need only be concerned with following the requirements set out by the project engineer. However, in cases where the conveyor designer is working directly for the project owner, he should be aware of the full requirements of the governing building code.

Equally important is the design for operational safety. Federal safety requirements are defined by OSHA for industrial establishments and MSHA for mines and quarries. Some states have more stringent requirements than OSHA and MSHA. The means of egress is often an issue governed by local codes in addition to OSHA regulations, particularly for elevated structures. These codes define such things as

www.EBOOKSPORCHE.com Downloaded (4404) on May 2 2017 to Pattanapom Sritrakool, Sa Kaeo, , Thailand

safety guarding and the requirements for walkways, handrails, stairs, ladders etc.

Engineering drawings often must be stamped by a Professional Engineer who is registered in the state where the project is located and is responsible for the design. Sometimes there is also a requirement that the company employing the engineer be licensed to operate in that state.

Table 2.22 gives some examples of codes that may apply in the design and construction of a conveyor system. It is important that the applicable edition, as determined by the governing building code, is used. The governing building code will not always reference the most recent edition.

Organization	Acronym	Web Site
American Iron and Steel Institute	AISI	www.steel.org
American Concrete Institute	ACI	www.concrete.org
American Galvanizers Association	AGA	www.galvanizeit.org
American Institute of Steel Construction	AISC	www.aisc.org
American National Standards Institute	ANSI	www.ansi.org
American Railway Engineering and Maintenance-of Way Association	AREMA	www.arema.org
American Society for Nondestructive Testing	ASNT	www.asnt.org
American Society of Civil Engineers	ASCE	www.asce.org
American Society of Testing Materials	ASTM	www.astm.org
American Welding Society	AWS	www.aws.org
Building Officials and Code Administrators	BOCA	Now part of ICC
International Code Council	ICC	www.iccsafe.org
International Conference of Building Officials	ICBO	Now part of ICC
International Standards Organization	ISO	www.iso.org
Mine Safety and Health Administration (USA)	MSHA	www.msha.gov
National Fire Protection Association	NFPA	www.nfpa.org
Occupational Safety and Health Organization (USA)	OSHA	www.osha.gov
Society for Protective Coatings	SSPC	www.sspc.org
Southern Building Code Congress International	SBCCI	Now part of ICC
Wire Rope Technical Board	WRTB	www.wireropetechnicalboard.org

Table 2.21
Organizations that publish standards and codes that apply to conveyors

The following publications listed in Table 2.22 are examples of codes and standards published by these organizations. Project managers, engineers, and designers should determine which documents (and their latest editions) are required for each application. In many cases, state and local codes and standards may also apply.

WWW.CEMAENET.ORG - No issued printed CEMA standard on October 21, 2015 to Pattarapon Sirisa-ngtrakul, Thailand

Organization & Publication	Conveyor Support Related Issues
ACI 318, "Building Code Requirements for Structural Concrete and Commentary"	Foundation Design Requirements, Loads, Strength, Reinforcement
AISC, "Detailing for Steel Construction"	Shop Drawing Presentation, Connection Details, Framing Details
SSPC, "Good Painting Practice – SSPC Painting Manual, Volume 1"	Protective Coating Considerations, Surface Preparation
IBC, "International Building Code"	Structural & Foundation Design Requirements, Loads, Load Combinations
NFPA 101, "Life Safety Code"	Fire Safety Issues, Required Egress
NFPA 5000, "Building Construction and Safety Code"	Structural Design Requirements for Fire Safety
AREMA, "Manual For Rail Engineering"	Required Rail Clearances
AISC, "Manual Of Steel Construction" (ASD or LRFD)	Allowable Loads & Stresses, Connections, Structural Member Selections
ASCE 7, "Minimum Design Loads For Buildings And Other Structures"	Structural & Foundation Design Requirements, Loads, Load Combinations
ISO 5049, "Mobile Equipment for Continuous Handling Of Bulk Materials"	Structural Design Considerations, Loads, Allowable Stresses, Overturning Loads
NFPA 70, "National Electric Code"	Required Power Line Clearances
AWS D1.1, "Structural Welding Code – Steel"	Welded Connection Design Requirements, Weld Qualification, Fabrication, Inspection, Symbols
AGA, "The Design of Products to Be Hot-Dip Galvanized After Fabrication"	Structural Design Considerations, Drainage, Venting, Distortion, Surface Repairs
OSHA, "Title 29 Code of Federal Regulations Part 1910"	General Safety Issues, Stairs, Handrail, Walkways, Ladders, Guarding, Egress (USA)
MSHA, "Title 30 Code of Federal Regulations Parts 1 to 199"	Safety Issues in Mining Applications (USA)
WRTB, "Wire Rope Users Manual"	Rope Selection & Strength, Safety Factors, Minimum Sheave & Drum Diameters, Maximum Fleet Angles

Table 2.22
Example code and standards publications

CEMA has issued this document (3460) on Apr 24, 2017 to Mr. Sakarin Sriwarom, Thailand

Canada

The legal requirements for construction in Canada are similar to the United States. The governing code will be the provincial building code in the province where the project is located. Typically, provincial building codes will follow the National Building Code of Canada, although there will be some amendments in each provincial code. Wind, snow and earthquake design requirements are defined in the National Building Code of Canada. Labor laws are a provincial responsibility, thus the workplace safety codes will be set by the province, rather than a national authority. Engineering drawings must be stamped by a Professional Engineer who is registered in the province where the project is located.

Codes and Standards in Canada are typically written by the Canadian Standards Association (CSA). In cases where there is no CSA code, it is typical to defer to the appropriate American code. Examples of Canadian Codes are listed in Table 2.23

One area where Canada differs from the United States is the requirement for welding of structural steel. The provincial building codes and CSA welding code W59 require that all welding for the fabrication or installation of structural steel be undertaken only by companies certified to CSA W47.1. This code

covers requirements for welding procedure specifications, welder qualifications and quality control requirements for the company's welding operations.

Canadian National Codes:	Acronym	Website
Design of Concrete Structures	CSA A23.3	www.csa-international.org
Engineering Design in Wood	CSA O86	
Canadian Electrical Code	CSA C22.1	
Limit State Design of Steel Structures	CSA S16	
Strength Design in Aluminum	CSA S157	
Welded Steel Construction	CSA W59	
Certification of Companies for Fusion Welding of Steel Structures	CSA W47.1	
National Building Code of Canada		
Consult Canadian Provincial Codes for local requirements: Provincial Building Codes, Provincial Electrical Codes, Provincial Occupational Health and Safety Requirements		

Table 2.23
Canadian National Codes that apply to conveyors

Mexico

In the past, the design of conveying systems in Mexico used a combination of Mexican and American standards. The Commisión Federal de Electricidad guideline, CFE 1993 version, was often used to define wind and earthquake loads, while American standards were often referenced for the structural design (ASTM, AISC, AWS) and safety standards (OSHA and MSHA). Recently the 2008 version of the Manual of Civil structures, MOC-2008, is intended to provide a model building code for Mexico similar to the ASCE7 standard in the United States. MOC-2008 is a comprehensive code that includes many structural systems, including building and some other structures. It includes an improved earthquake load methodology as one of the goals of MOC-2008 to improve the safety of seismic design in Mexico. Similar to the transition to the IBC and ASCE7 codes in the United States, MOC-2008 provides a more rigorous design approach than previous standards. Some specifications for new conveyor system in Mexico still reference the 1993 CFE code for wind and earthquake loads, but over time MOC-2008 will become more prevalent.

WWW.CEMANET.ORG has issued this document (ID 4560) on Nov 24, 2017 to Pattaporn Sirirakchai (Siam Cement Group, Thailand

DESIGN

As a conveyor structural system is developed, the structure must be evaluated to ensure that the structure is both stable and economical. Typically, an initial layout of the structure is generated using estimated structural member sizes. This layout serves as the basis of determining the self weight of the structure. It is very important to correctly identify all the loads acting on a structure under the guidelines of the applicable codes and standards. One or two iterations of analysis and evaluation are typically required to finalize the member selections. This procedure can be streamlined through the use of pre-engineered structures and through the use of standards, guidelines and structural analysis software.

Allowable Stress Design

A traditional method for evaluating structural members under load is "Allowable Stress Design" or ASD. With this method, code prescribed loads acting on structural members are determined. These stresses are then compared with the stresses allowed by code. These allowable stresses are determined by taking the nominal material strengths and dividing them by a factor of safety. A member is said to be structurally adequate only if its actual stresses are lower than the allowable stresses when caused by the worse code determined load combination.

Load And Resistance Factor Design

An alternate method for evaluating structural members under load is "Load & Resistance Factor Design" or LRFD. With this method, loads acting on the structural members are compared to the predicted strength of the members. Factors are applied to each load and material strength to reflect degrees of uncertainty, probability of various loading events, load combinations, safety, and accuracy of predicted strengths. This method provides a more uniform reliability not found in ASD.

Vibration

In addition to load and stress considerations, structural supports must be designed to prevent excessive vibration. Critical supporting structures should be analyzed to ensure that the natural frequency of the structure is not harmonic with the applied frequency of any vibrating or rotating machinery or the moving belt. This is especially important for support structures for screens, crushers, and feeders. Isolating vibrating equipment using some type of damping device is recommended. Vibration of structural members due to wind can be avoided using advanced analysis or the minimum values for slenderness ratios set by codes and standards.

Deflection

All structures under load will deflect. It is important to limit these deflections to acceptably low values to avoid problems with belt training, tripper or shuttle operation, or other structural interferences. Comfort and safety of workers should be considered in regard to allowable deflections along walkways. One method of minimizing deflection problems is to design camber into a beam or truss support. With this method, sufficient curvature is built into the structure such that, under load, the structure deflects to a desired position. Note, however, that the total movement of a cambered beam or truss is the same as a non-cambered beam or truss. Deflection problems, as well as material costs, may be minimized by establishing guidelines for depth-to span ratios. Depth-to-span ratios are historically empirical and must be used in conjunction with experience and sound judgment. Deflection issues are more common on the cantilever section of conveyor structures, thus the designer of these structures must pay particular attention to potential problems.

UNCONTROLLED Copy when issued this Manual (14604) on 24-10-2016 to Patta Pipat School, Sukhothai, Thailand

Truss Type	Approximate Span to Depth Ratio
Simple Span Trusses	15:1 to 20:1
Continuous Span Trusses	20:1 to 25:1
Cantilever Trusses	5:1 to 10:1

Note: These span to depth ratios are representative of those often used in practice and are not intended to serve as recommendations. Consult the most recent edition of the applicable code. The depth to span ratio of specific trusses should be designed to limit member stresses and truss deflections to acceptable levels. Horizontal deflection on various truss structures in addition to vertical deflection must be considered.

Table 2.24
Common depth to span truss ratios

Buckling

The conveyor designer must be aware of limitations in structural capacities due to buckling of structural members . A member can buckle when subjected to compressive loads by twisting under bending loads, or local buckling can occur where the width to thickness ration of a section in compression is too high. The structural code for the material being used will include equations to determine these limitations. These buckling limitations can significantly reduce the carrying capacity of the member below normal stress limits. In particular, care must be used when using high strength steels. The strength is increased, but the buckling capacity (a function of the modulus of elasticity) is not increased for high strength steels. Adequate bracing for compression members and for long bending members allow the member to support higher stresses.

Materials

The steels used for conveyor support structures are designated by ASTM specifications. Table 2.25 lists several widely used steel products along with the most common ASTM specifications for each product. It is worth noting that many higher strength steels are readily available, at a cost comparable to the lower strength steels. For example, W-sections made of ASTM A36 are being phased out by ASTM A992. Other ASTM specifications exist offering higher strengths and atmospheric corrosion resistance. The local availability of these steels should be confirmed prior to their specification.

While higher strength steels offer savings in weight, there are potential pitfalls that the designer must be aware of. The stiffness of high strength steel is no greater than A36 steel, and the higher stresses lead to higher deflections. A span to depth ratio that was acceptable using A36 steel may be problematic with a high strength steel.

Brittle fracture can be more of a concern in high strength steels. Brittle fracture becomes an issue in low temperatures, but the stress level is also a contributing factor. High strength steels where higher stresses are permissible are more likely to be susceptible to brittle fracture.

WWW.CEMANET.ORG has licensed this document to [illegible] on Apr 24, 2017 (Parvathy Chitrakool, Suanlux Engineering)

Structural Shape	Grade	Min. F_y ksi (mPa)	Min. F_u (ksi)
W-shapes [1]	ASTM A572 grade 50 with special requirements per AISC Technical Bulletin #3, dated March 1997 (ASTM A992)	50 (345)	65 (448)
M-, S-, and HP-shapes	A36	35 (241)	58 (400)
	A572 grade 50	50 (345)	65 (448)
Channels	A36	36 (248)[3]	58 (400)
	A572 grade 50	50 (345)	65 (448)
Angles	A36	36 (248)[3]	58 (400)
Steel pipe	A53 grade B	35 (241)	60 (414)
Round HSS	A500 grade B	42 (290)	58 (400)
	A500 grade C	46 (317)	62 (427)
Square & rectangular HSS	A500 grade B	46 (317)	58 (400)
	A500 grade C	50 (345)	62 (427)
Structural plate	A36	36 (248)[3]	58 (400)
Structural bar	A36	36 (248)	58 (400)
Raised-pattern floor plate	A786	Note 2	Note 2
Other plate products	Varies with application	Varies	Varies

[1] ASTM A572 grade 50 with special requirements per technical bulletin #3 dated March 1997 is also known as ASTM A992

[2] If ordered as "commercial grade" no minimum strength is applicable. If ordered to plate material specification such as ASTM A36, AS572 or AS588, F_y and F_u will be as specified. Commercial grade per ASTM A786 section 5.1.2 means the product will be supplied 0.33 % carbon without specified mechanical properties.

[3] F_y = 32 ksi for ASTM A36 material over 8 inches thick.

Table 2.25
Typical ASTM specifications for structural elements

Miscellaneous

Conveyor structural supports should be designed and installed to provide parallel, straight, square, and level mounting surfaces for conveyor components such as idlers, pulleys, drives and accessories such as scales and magnets. The equipment manufacturer typically sets alignment tolerances. In many cases it is important to provide supports with some means of adjustment for squaring or leveling the support such as shims, jacking bolts, or slotted holes.

Supports should be designed with consideration for routing electrical conduits, cable trays, lighting, air and water piping, dust suppression systems, fire suppression systems, dust collection ducting, drainage pipes, and vacuum pipes. Placement of these systems should be such that access to, or removal of, conveyor components is not hindered. Furthermore, conveyor support structures should be designed with adequate access to equipment for inspection, clean-up, and servicing.

In areas where build up of dust and spillage can create a hazard, consideration should be given to structures which tend to be self-cleaning. Round structural elements are often used on mobile conveyors to reduce build-up. The orientation of structural elements at 45 degrees, such as angle sections, can reduce build up along with dust caps or using 45 degree slope plates on key structural areas to prevent buildup.

www.CHAIN.ORG has issued this document (4th Edition) on March 2017 to Patarapom Sirikaroon, Siamtung, , , Thailand

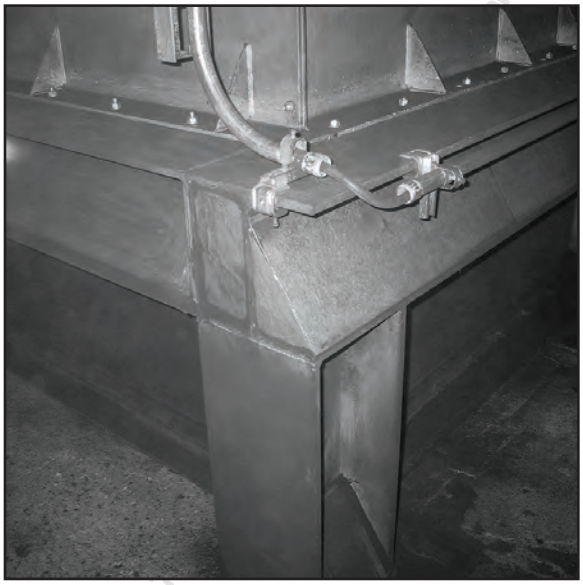

Figure 2.26
Buildup resistant structure

Special consideration should be given for the installation, splicing, and removal of conveyor belting. Other equipment such as pulleys, drives, and magnets may require the installation of service doors and monorail beams with hoists. The distance between tower floors is usually affected when monorail or hoist systems are needed.

Conveyor support structures should be designed and detailed with careful thought as to how the structure will be shipped and assembled. Trucks have limits for weight and size of shipments. Overseas shipments are often placed in containers. Lifting lugs may be required for shipping and assembly. Structures to be galvanized should be designed with consideration given to maximum galvanizing kettle size, possible distortion of the structure, proper venting and drainage of cleaning solutions and zinc, clearances between coated parts, and sealing of any overlapping surfaces.

LOADS

This section presents a general description of the loads for which conveyor system support structures must be designed. This information is presented for educational purposes, and is not intended to be a substitute for the applicable building code or other governing documents. The limiting conditions for a conveyor are at start up and at shut down in terms of design tensions, drive power, and all of the related loads.

Dead Loads

The dead load of a conveyor or building is generally the self-weight of all the elements from which it is constructed. For a conveyor support structure, the self weight of the structural members, connections, handrails, walkways, belt, idlers, electrical and utility conduits, and other permanently installed items are generally classified as dead loads. The dead load for a design is typically reduced when considering the resistance of uplift loads.

www.CEMAnet.org Purchased/Downloaded/Issued [illegible]

Live Loads

Live loads are those loads produced by the use and maintenance of the conveyor and related structures.

Bulk Material Loads

The material being conveyed on the belt is the material live load. Table 3.5 presents approximate bulk densities for various bulk materials, while the typical belt conveyor capacities may be found in Chapter 4. CEMA Standard 550 has a comprehensive list of bulk material properties. It is recommended, however, that the designer consider a range of unit weights and material profiles when selecting a belt size and designing the resulting support structure. For example, consider a 36-inch wide belt conveyor with 35° idlers, transporting a material with an estimated bulk density of 50 lbf/ft^3 (801 kgf/m^3) and a surcharge angle on the belt of 10°. This material will have a unit weigh of approximately 41.3 lbf/ft (61.5 kgf/m). If the unit weight increases to 55 lbf/ft^3 (881 kgf/m^3), and the surcharge angle increases to 15°, the material on the belt will weight approximately 49.7 lbf/ft (74.0 kgf/m) – an increase in material live load of 20%.

An upset condition, such as a plugged chute, can cause a belt to temporarily fill to overflowing. Thus, the nominal design capacity of the belt used for steady state tension calculations is often much less than the total load that can be placed on the belt. The conveyor structure should be designed to structurally carry the full belt load unless there are fail safe controls in place to ensure that over-loading will not happen. See Figure 4.30.

Piping And Conduit Loads

Often conduit and piping loads are not known at the time the structure is being designed, and appropriate assumptions must be made. Piping and conduit runs can collect significant amounts of fugitive materials. A generally accepted live load addition for the horizontal projection of piping and conduit runs is 25 to 50 lbf/ft (37 to 74 kgf/m). Piping and conduit should not be mounted on the conveyor stringers or supports in areas of known material spillage, or where frequent maintenance is required such as the tail and head sections, or along the conveyor such as in front of return idlers and bend pulleys.

Spillage Loads

Invariably, material spills will occur when using belt conveyors. Material can stack on walkways, structural members, conduits and other parts of the conveyor system and the structures that the conveyor passes over. Consideration should be given to totally enclosed galleries where conveyors pass over bodies of water, buildings, substations, roadways, railways and similar situations.

The structure design must consider the additional material weight that can build up from spillage even though housekeeping measures should be in place to remove spills on a routine basis. When calculating the potential load from spillage, the worst case angle of repose must be used. In many cases, wet spillage and carryback can have an angle of repose approaching 90 degrees. In addition to identifiable spillage loads, 10% of the material load is commonly used for an additional distributed load due to spillage and dust accumulation.

Drip pans are sometimes attached to the underside of belt conveyor structures to collect spillage, especially when the conveyor is passing over a highway, railway, or other area where spillage below is undesirable. The build-up of materials on drip pans can be significant, adding a large load to the structure. Drip pans are often hard to clean and can accumulate significant amounts of material. Therefore structural analysis of adding “drip pans” to a new or existing conveyor structure should be

www.CEMA-DIG.org has licensed this document (2.50) on Apr 24, 2017 to rutaiporn@ruraleng.com, Thailand

done because the loads and safety consequences can be significant.

Walkway And Ladder Live Loads

Most belt conveyor systems have a walkway or walkways and platforms attached to the support structure to provide maintenance and repair access to the belt and personnel access to the facility served by the conveyor. The width of the walkway and the design uniform and concentrated load must be defined. The applicable building and industrial safety codes, and the usage requirements of the belt structure, should provide the minimum requirements for the belt width and loadings. Maintenance activities can create significant temporary point loads such as equipment staging and number of workers that must be considered. Common industry practices for walkway live loads are:

Access Means	Typical Live Loads To Consider	Reference
Platforms	Actual equipment loads and usage but not less than 100 lbf/ft² and point load of 2000 lbf on a 2 x 2 ft square (489 kgf/m², 880 kgf on 600 x 600 mm)	ASCE7-2002 Table 4.1
Walkways	60 lbf/ft² or 50 lbf/ft over full span or 50 lbf/ft² over 8 ft whichever is greatest (293 kgf/m² or 74 kg/m or 244 kg/m²)	
Stairs	100 lbf/ft² (489 kgf/m²)	
Ladders	300 lbf per every 6 ft (150 kgf per 2 m)	

Table 2.27
Typical walkway and ladder live loads

Plugged Chute Loads

Material is often transferred from a conveyor belt to a piece of equipment, or another belt, via a material chute. Mechanical breakdowns or variable material properties can cause chutes to plug. When there are multiple load points on a belt the accumulated effect of all load points being plugged must be considered. These loads can be significant and cause a great deal of damage to components, chutes, and structures and have an impact on the required drive power. The belt conveyor structure designer should determine the potential loads resulting from plugged chutes, and consider these loads in design.

Plugged chute detectors should be installed and maintained to reduce the potential damage due to excessive loads due to plugged chutes. The presence of a plugged chute detector does not alleviate the need to design for a fully plugged chute since plugged chute switches can fail or be disconnected.

Belt Tension Loads

A belt conveyor is a continuous loop of elastic material, and the tension in the belt results in forces that must be transmitted to the structure. Belt tension forces will vary throughout the length of the belt. Forces normal to the belt are created at bend pulleys and in curves. These forces are often referred to as the belt pull. If the belt is self-contained within one support structure, such as a truss, the belt pull forces may be contained within that truss, resulting in longitudinal compression on the truss. Typically, however, the forces must be considered in a number of structural elements, as a structural path is provided for transmitting the belt tension forces to the ground. It is recommended that the structures be designed for the maximum forces that can occur.

An important consideration in the design of a head pulley frame or a drive pulley frame is the short-term increase in belt tensions during startup of the belt or in a condition where the belt jams. The startup load is often higher than the steady state load as higher tensions are required to overcome at-rest friction forces and to provide initial acceleration forces on the various components. This is especially true on

www.conveyorknowledge.com (1664) Apr 24, 2006 to Prasert Chatrakoon, Siam Cement, Thailand

shorter conveyors. The magnitude of the startup load should be determined based on the startup motor torque curves for the conveyor.

Jamming loads are created when something jams the belt and the motor/pulley increases its torque on the pulley in an attempt to continue to move the belt. This condition can create significantly higher belt tensions, which are typically estimated by applying 150% to 250% of the nameplate motor torque on the belt. Allowable stress increases may be applicable for these short-term load cases, but should be applied in accordance with the applicable code. Plugged chute pull out tension can be estimated by using the feeder design information in Chapter 12.

Environmental Loads

Conveyors can accumulate significant amounts of environment generated loads. These are loads that act as a result of weather, topography, wave action and other natural phenomena such as the lateral pressures of soil, groundwater or bulk materials.

Expansion Loads

Belt conveyors are typically supported on steel and/or concrete structures. Both steel and concrete expand and contract with temperature at an approximate rate of 3/4 inch per 100 feet of structure per 100 °F (19 mm per 30 m per 38 °C) of temperature change. If the thermal movement of the structures is restrained, longitudinal forces many times the design forces can occur in the structural elements and lead to rotation or movements of vertical support elements, buckling of the steel or pull out of the anchors. Expansion joints must be provided to prevent this from occurring.

Water, Snow And Ice Loads

Bulk solids are often stored outside and can hold significant amounts of moisture, temporarily increasing their bulk density. In colder climates, the accumulation of snow and ice on conveyor belt covers, structures, and walkways can add a significant load to the structure. Snow and ice can build up on both the carrying and return runs and exert considerable forces on conveyor components and structure upon start up. Belt systems using V-return idlers can hold large amounts of rain water, ice and snow. The applicable local building code will typically provide the minimum local requirements for snow and ice build-up on the structure.

Wind Loads

Wind blowing on a structure imparts a pressure on the structure that is proportional to the square of the velocity of the wind. The velocity of the wind, as well as many other factors that account for the location, shape and use of the structure, are found in the applicable local building code. The wind provisions of most modern codes are taken from the publication ASCE-7. This publication provides methods for determining the appropriate wind-created forces on open, semi-open or latticed structures, such as conveyor support trusses and towers.

Most designers recognize the effects of wind blowing perpendicular to a conveyor support structure. However, many designers ignore or discount the effects of wind blowing parallel to, or nearly parallel to a conveyor support structure. The pressures on the structures, and the subsequent structural forces, may be significantly different from those of a perpendicular wind, and cannot be ignored. The wind loads parallel to the structure are typically outside the scope of ASCE-7, so designers should consider other guides such as ISO-5049-1 for these loads.

www.CEMAnet.org has issued this Content (SAP) on Apr 20, 2017 to pattarapom Satakool, Suandusit U, Thailand

Seismic Loads

Research into the effects of earthquakes on structures has resulted in significant changes to the seismic design provisions in modern building codes. The earthquake loads can occur in any direction. The earthquake can produce longitudinal loads parallel to the conveyor which are much higher than longitudinal wind loads. These loads must have a clear path through the structure to the foundation.

Designers should be aware that seismic forces may have to be considered in situations where they have historically not been a design consideration. Seismic, or earthquake-movement induced loads, are determined using the provisions of the applicable local building code. Seismic forces are greatly affected by the mass of the structure, and should be calculated with the design material loading and all dead loads. Most codes rely on inelastic ductility during an earth quake so designers must also consider the code specific structural detailing requirements.

Stockpile Loads

Exterior stockpiles are often used to store bulk materials such as stone, coal, or other materials that can tolerate exposure to weather. Designers should be aware that exterior and interior stockpiles can exert large forces and overturning moments on conveying system structures. This is especially true of conveyor support towers and bents which are directly impacted by either static stockpiles or flowing material. Soils theories outlined in soils texts or in NAVFAC DM7.01 Soil Mechanics can give assistance to the evaluation of stockpile loads on partially or completely buried conveyor supports.

Dynamic Loads

The structural design of most belt conveyor systems is based upon a static loading model. However, a belt conveyor is a dynamic mechanical system, with the potential for movements, accelerations and vibrations that are transmitted to the supporting structure. Dynamic loads from tension waves in the belt can occur in longer conveyors during start up or stopping, and in some cases can govern the design of the structure. Items that may be of special concern are any type of equipment that might impart a repeated dynamic loading, such as a vibratory feeder or a lump breaker. The designer of the structure in such cases will have to consider the dynamic loadings and resonant properties of the structure.

Future Load Allowances

Belt conveyors and other industrial structures are constructed and used in changing process conditions and variable environments. Many factors influence the design of the structure such as multiple bulk materials conveyed on the belt or multiple loading and discharging configurations.

The designer cannot account for all the possible future uses or loadings of a conveyor without seriously over designing the system. However, it is not unusual for a conveyor system to have planned future intentions that may allow the designer to accommodate the anticipated changes. For example, the user of a conveyor system may wish to add drip pans or siding to a conveyor system as a known future modification. These additions significantly increase the structural loadings of the conveyor system. Modifying a conveyor structure to accommodate such additions in the future may be difficult and expensive. The addition of an agreed-to uniform load for future considerations during the initial design, while adding to the initial conveyor cost, may provide a significant long-term benefit.

www.CEMA-AE.org has issued this document (4th ed) on Apr 24, 2015. Purchased from Sritrakon Siriwong, Thailand

Load Combinations

The dead load, anticipated live loads and environmental loads must be combined to reach the total load on the structure. The applicable building code provides definition of the appropriate combination of loads that must be considered in the design of a structure. Designers should be aware that different types of loading combinations are found in building codes. However, building codes are based on building design and do not include all the loads that will occur in a conveyor installation, such as belt tensions and plugged chutes. Therefore, the designer of a belt conveyor structure must exercise good judgment in applying the provisions and intent of the applicable code to the design of an industrial structure. Special care should be taken to ensure that service level and strength level loadings are not inappropriately combined.

CORROSION PROTECTION

A number of methods can be used for corrosion protection. Many conveyors are in environments where corrosion is not an overriding issue if a simple allowance for corrosion is added to the thickness of the structural members exposed to weather. A common allowance in these cases is to increase the thickness of the structural members by 1/8 in (3 mm).

However, belt conveyors are often placed in industrial environments exposed to the process water, salt water, corrosive bulk materials, ultraviolet light and other elements that can deteriorate the conveyor structure and components. When conveyors are in potentially corrosive environments, (i.e. marine environment, handling corrosive bulk materials, etc.), corrosion needs to be dealt with based on the actual situation. In most cases, corrosion can be dealt with by specifying a suitable surface protection, usually a paint system or galvanizing. In extreme cases, consideration should be given to constructing the conveyor structure out of corrosion resistant materials, for example aluminum, stainless steel or timber.

In any corrosion protection system, care should be taken to avoid details that will promote deterioration. Details that capture water or the conveyed product can promote corrosion. The attachment of dissimilar metals can promote corrosion through galvanic action. Abrasion of moving components on coated structures can remove the protection.

Careful attention also needs to be paid to the connections in potentially corrosive environments. Slip critical bolted connections require special preparation at the bolted joint, including the elimination of paint. Consideration must be given to the bolted connections for compatibility with the protection of the structural members.

Paint

The most common method of corrosion protection is to paint the conveyor structure. Paint processes vary from a wire brushing and a single coat of paint to sand blasting, acid etching and applying "high build" epoxy paint systems. The level of paint depends on the expected life of the conveyor and the amount of corrosives in the environment where the conveyor is to be used. The Steel Structures Painting Council (SSPC) manuals offer information on the preparation and paint system appropriate for different operating conditions.

The advantages of paint are:

- Widely and readily available
- Less costly than many other corrosion protection systems
- Easily field repaired
- Available in many colors

NWCDA.NET.ORG has issued this document (1460400) on Apr 4, 2017 to Pattaraporn Sritrakool, Siambulk Co., Thailand

The disadvantages of paint are:

- •Relatively shorter life of paint corrosion protection
- •Scratches may allow deterioration to develop undetected under the paint
- •Inability to coat interior surfaces of pipes or tubes

Galvanizing

Galvanizing is another form of surface corrosion protection in which the components are dipped in molten zinc or zinc alloy to form a corrosion resistant coating. This coating resists corrosion for a longer period than paint in most environments. Because the protection comes partially from the galvanic action between the steel and the zinc, minor scratches will reseal and maintain a level of protection for the steel.

Care must be taken in the detailing of steel that is to be hot dipped galvanized. If there are completely enclosed air spaces, such as a pipe column with end plates, the heat from the hot dip process can cause the member to explode. Vent holes must be put in the steel to allow the escape of expanding gases which must be orientated to avoid collecting water or material in use.

Galvanizing can provide long term corrosion protection for many environments and can give protection to interior areas not accessible to paint. However, galvanized steel is difficult to repair in the field and the heat from the process can distort light members.

Corrosion Resistant Steels

If a high level of corrosion resistance is required, the conveyor frame can be constructed from corrosion resistant metals such as stainless steels or weathering steels.

Stainless steel provides excellent corrosion protection in most environments. Stainless steel is available in many grades. Because the steel is corrosion resistant through the thickness of the steel, scratches do not affect the performance of the corrosion resistance. Stainless steel construction is very expensive and therefore stainless steel is used where the required corrosion resistance justifies the cost.

Weathering steel is intended to rust which creates a protective surface oxidation to protect the rest of the steel. This steel can be used for corrosion resistant conveyor members or enclosures. If the surface is scratched, the weathering steel will produce another corrosion resistant layer of oxidation and therefore "heals" itself. Be aware that this initial rust can stain surfaces below the weathering steel. Care must also be taken to use welding techniques compatible with the weathering steel.

Alternate Materials And Methods

In some cases, because of the potential for deterioration due to corrosion, alternate construction materials may appropriate. Systems are available to provide cathodic protection for steel structures; however these systems are not commonly used for conveyor structures.

Aluminum and other light metals are corrosion resistant in many environments. Aluminum is particularly useful for smaller and lighter conveyor members. While aluminum is lighter than steel, it is less strong and significantly less stiff than steel. Many aluminum alloys are heat treated, therefore care must be given to proper detailing of welded connections to avoid the loss of strength in critical areas. Many regulations prohibit the use of aluminum, magnesium and titanium alloys in underground mines with fire or explosion potential because alloys of these metals may generate, upon impact with rusty steel, a thermite reaction with sufficient energy to ignite methane gas.

WWW.NEWAGE-INDIA.COM This document is issued to [illegible] on Apr 24 2017 for exclusive use by [illegible], Bangkok, Thailand

When dissimilar metals are used care must be taken in the design of the connections to reduce corrosion from galvanic reactions. For example aluminum and steel can have a relatively strong galvanic reaction.

Concrete can produce durable, low maintenance structures. Concrete can be used as cast in place (poured on site) or pre-cast components. Careful mix and crack control design is necessary for concrete structures used in harsh environments.

In other applications, wood or fiberglass may be the appropriate material to be most resistant to corrosives. Care must be taken in the connection details to provide corrosion resistant connections which match the life of the wood structure.

MAINTENANCE

Maintenance of the conveyor structure is essential for the safe and productive operation of a conveyor system. Conveyors are often located in areas where heavy equipment is operated and unless protected can be easily damaged. Consideration should be given to protecting main structural elements from accidental damage from mobile equipment or maintenance operations through the use of barriers and guardrails. Damaged structures should be immediately repaired to prevent structural damage or failure, and to return the conveyor belt to its correct alignment to prevent spillage and belt damage. Foundation settling can cause similar problems with the belt path and must be compensated for or corrected. Heat can affect structures, and provisions for shielding the structure from elevated process heat must be provided. Pre-planning for maintenance by designing in lifting points or installing overhead cranes will eliminate using structural elements as hoisting attachments and help prevent structural damage.

When designing a conveyor belt system, allowing adequate room for maintenance of components is essential. Lack of space for maintenance and inspection often leads to a number of expensive conditions including the avoidance of routine preventative maintenance and proactive inspections. Poor access can triple the time needed for maintenance activities. Many times, space is limited in the initial design to reduce capital costs. Designers are often asked to fit more capacity into an existing space making maintenance more difficult.

Design constraints that consider only capital costs, or artificially underestimate maintenance costs in order to fit a budget, often increase operating and maintenance costs and reduce the ability to safely operate the system. To be competitive, many engineering firms and contractors engaged in a low bid process with inadequate specifications that ignore the long term costs of many design decisions. Many times, savings in capital by shifting costs to operating budgets or the theoretical savings from the low bid process, are lost in the first year of operation, and the deficit grows every year thereafter.

Access Requirements

While the recommended clearances may seem to dramatically limit design options or increase construction costs, there are many conveyors designed in recent years that incorporate many of these suggestions. For example, A-frame pulley support structures and larger pulley diameters are two relatively easy ways to provide the clearance needed for cleaning devices. The following minimum clearances and access requirements are recommended for cleaning, maintenance and service of the common conveyor systems, components and accessories.

www.CEMANET.ORG has a Multi-Document (Site) Agreement with Stirtkool, Subulong, , , Thailand

Clearance for:	Minimum Values	Dimension	See Figure
Pulley Replacement	BW+12 in (+300 mm), 30 in (750 mm) min.	A	2.30
Idler Replacement Primary side	Belt Width, 30 in (750 mm) min.	B	2.31
Idler Replacement Secondary side	1/2 Belt Width, 24 in (600 mm) min.	C	2.30, 2.31
Clearance Under Conveyor for Cleaning	24 in (600 mm)	D	2.30, 2.31, 2.34
Belt Cleaner Service – Removal	Belt Width	E	2.33
Belt Cleaner Service – Inspection Height	24 in (600 mm) min. or S + M, O or R	F	2.33
Personnel Passage	30 in (750 mm)	G	2.32, 2.33, 2.34
Skirt Board Replacement Height Access	9 in (230 mm)	H	2.30
Skirt Board Adjustment	6 in (150 mm)	I	2.30
Personnel Access Opening Height	24 in (600 mm)	J	2.32, 2.33
Personnel Access Opening Width	24 in (600 mm)	K	2.32, 2.33
Overhead Clearance	48 in (1200 mm)	L	2.30, 2.32, 2.33, 2.34, 2.35
Primary Belt Cleaner Location	Consult Manufacturer	M, N	2.32
Secondary Belt Cleaner Location	Consult Manufacturer	O, P	2.32
Tertiary Belt Cleaner Location	Consult Manufacturer	Q, R	2.32
Inspection Height Above Work Platform	24 in (600 mm)	S	2.32
Return Belt Cleaner (Plow)	Consult Manufacturer	T, U	2.34
Dribble Chute to Pulley Clearance	12 in (300 mm)	V	2.32
Belt Repair Area	3X Belt Width, 10 ft (3 m) min.	W	2.35
Conduit and Piping Run Free Zone	See Figures		2.30 through 2.35

Table 2.28
Minimum recommended clearances and access requirements

WWW.CEMANET.ORG has issued this document (1465) on Apr 24, 2017 to [illegible], Suanduang, Thailand

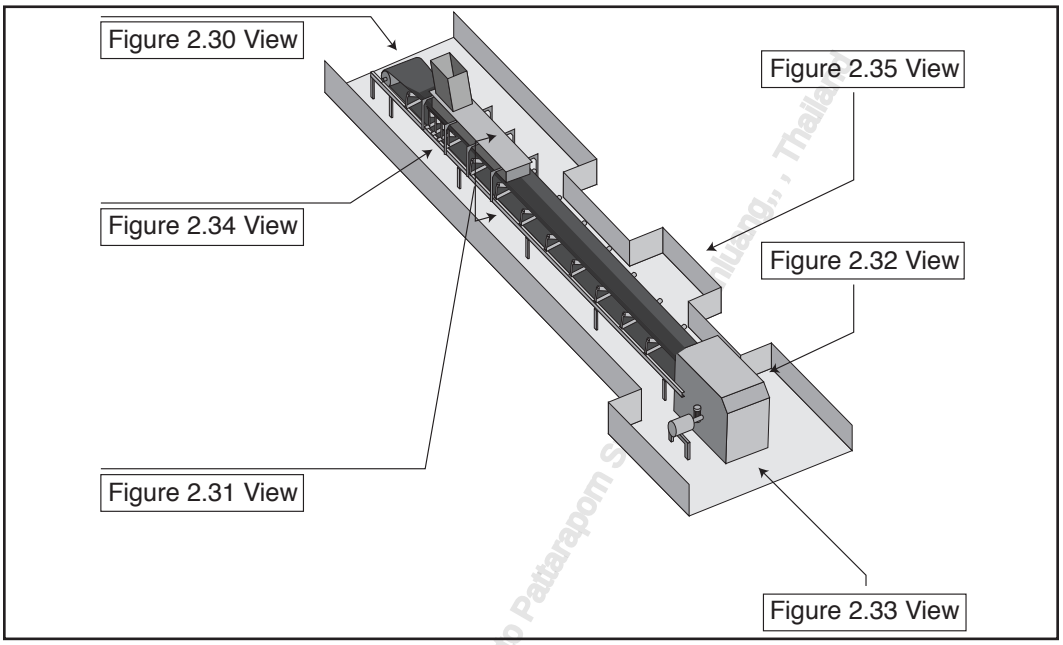

Figure 2.29
Views for recommended conveyor access clearances

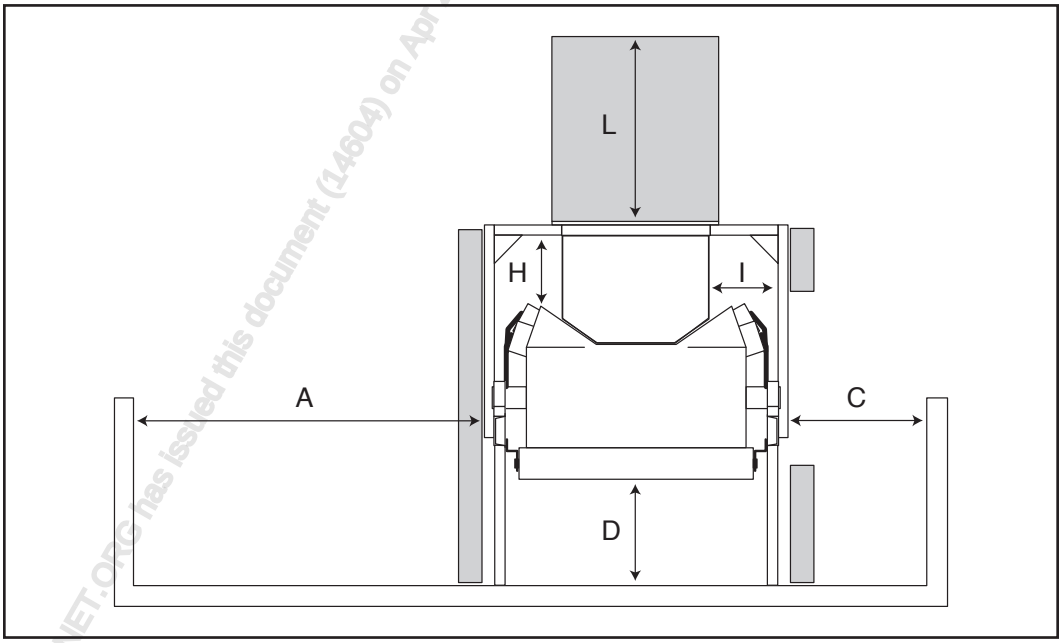

Figure 2.30
End view at tail pulley conveyor access clearances

WWW.CEMAT.ORG has issued this document (14604) on Apr 24, 2017 to Pattarapom S

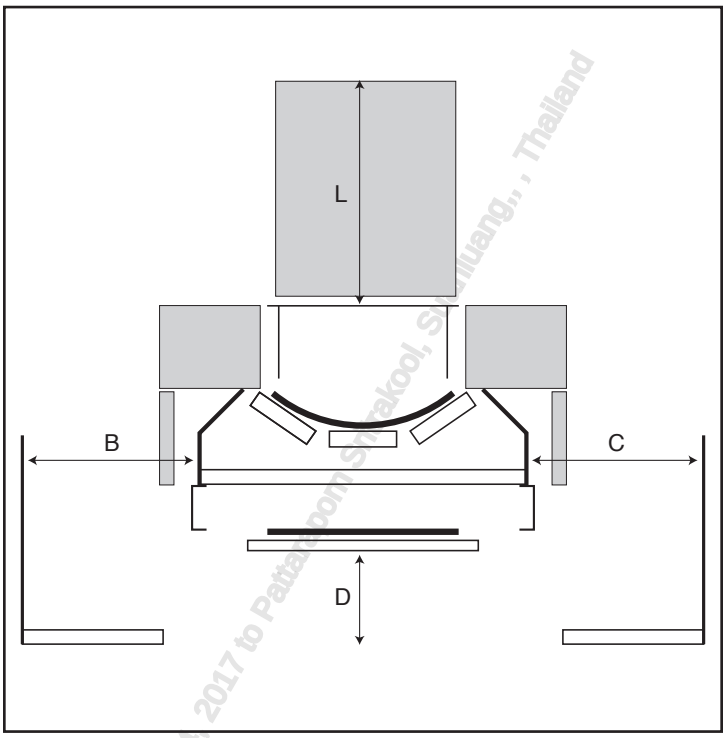

Figure 2.31
Access section through skirt and load zone

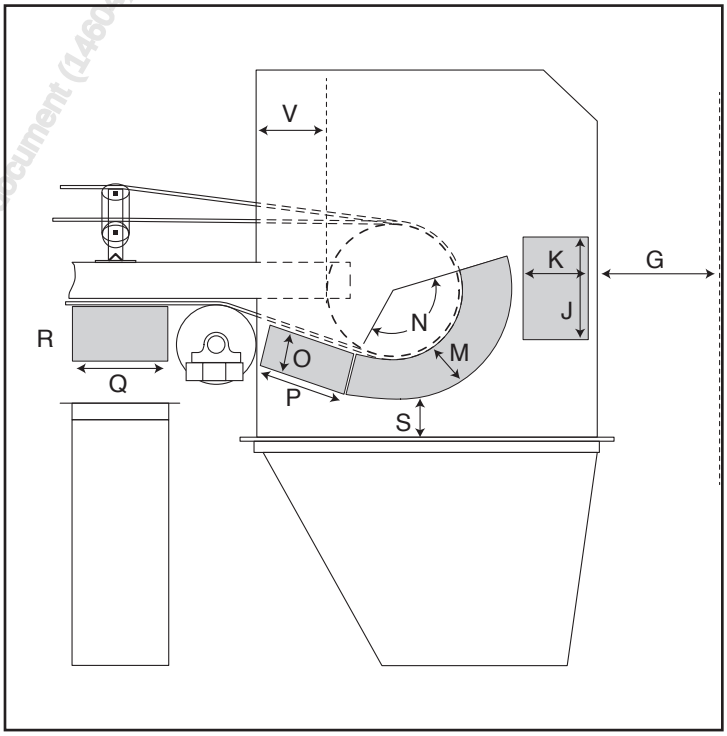

Figure 2.32
Elevation view of discharge

WWW.CEMANET.ORG has issued this document (14604) on Apr 24, 2017 to Pattaraporn Sirakool, Sirihuang, , , Thailand

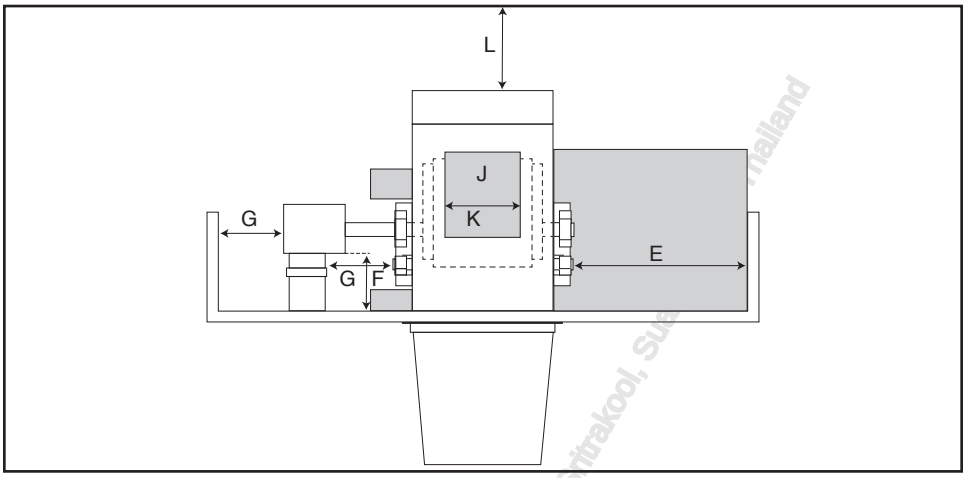

Figure 2.33
End view of discharge

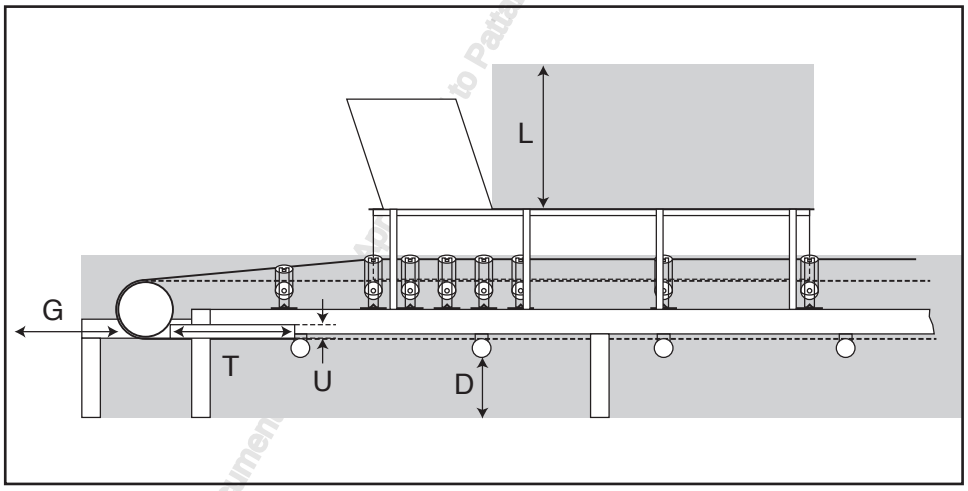

Figure 2.34
Elevation section view of tail and load zone

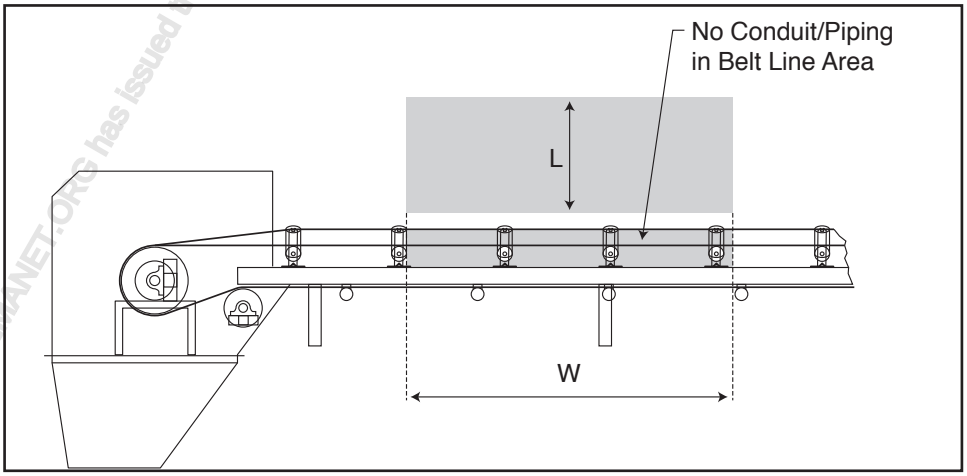

Figure 2.35
Elevation view of belt repair area

WWW.CEMANET.ORG has issued this document to Pattarapom Sritrakool, Suan Thailand

CROSSOVERS AND CROSSUNDERS

Crossovers or crossunders are used to allow personnel to safely cross conveyors at designated and approved locations when the physical layout does not provide safe and easy access from one side of a conveyor to another. Crossovers and crossunders are also used where there is a need to control foot traffic for safety reasons, or on longer conveyors where there is temptation to take an unsafe short cut. Local codes and site specific rules may govern the style, location and use of crossovers and crossunders. Appropriate guarding or other physical barriers surrounding a crossover or crossunder should be supplied according to code to protect personnel from moving conveyor components and spillage.

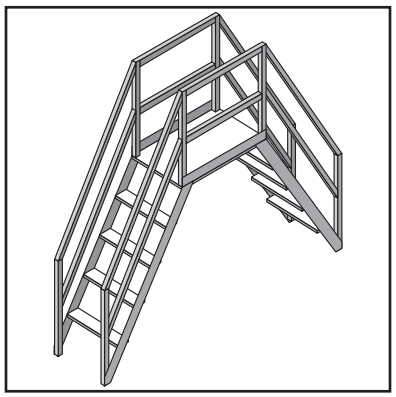

Figure 2.36
CEMA crossover Type 3

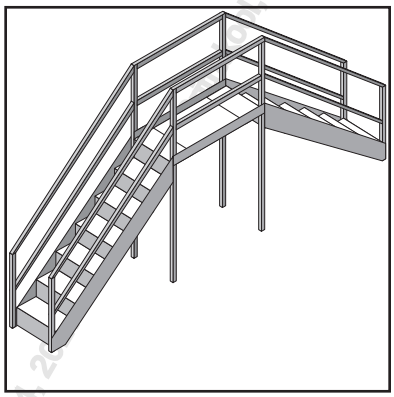

Figure 2.37
CEMA crossover Type 4

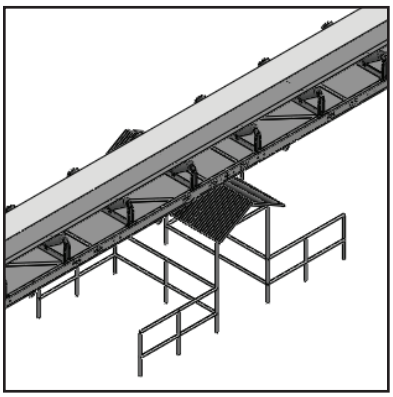

Figure 2.38
Typical crossunder

CEMA Recommendation

- Use CEMA type 3 or type 4 crossovers in accordance with CEMA Best Safety Practices Recommendation 001-2004 or most current version to cross over an conveyor
- Use Crossunders where exposure to a nip point or pinch point is not considered guarded by location
- Install a designated crossover or crossunder for every 1000 ft (305 m) of conveyor

THE LONG TERM EFFECTS OF DESIGN DECISIONS

The overall layout of a material handling system has a dramatic effect on the future cost of operating and maintaining the system. Consideration should be given to paved access and clean up areas. Adequate space for mobile equipment should be allowed. The designer should consider the method of and access for muck removal. The effects of wind, rain, snow and temperature should be carefully considered.

Upgrading

Field modifications are unnecessarily expensive and sometimes even impossible unless consideration for future changes are incorporated in the original design. If future plans may include increasing the capacity of the conveyor system, consideration should be given in the initial layout and design of the system. If not considered in the original design, increasing the speed of an existing conveyor to increase capacity can create numerous problems with the flow of the material, structures and enclosures. Changing any significant element of a conveyor, such as widening belt width or increasing the trough angle, cannot be done without a comprehensive engineering investigation of the consequences. Adding accessories, which were not considered in the original design, can have a significant effect on belt tension, especially on short conveyors.

www.CEMAnet.org Copyrighted document (August 2014) Surface Preview

Redundancy

Redundant conveyor systems should be considered for any process which requires continuous feed of material, such as feeding coal into a boiler in a power plant. Different approaches can be taken to size the capacity of redundant conveyors. It is often not necessary to duplicate 100% of the conveyor capacity if provisions are made for storage, such as bunkers in a power plant. It is common practice to size redundant conveyors so that each one can convey 24 hours of bulk material required by the process into storage in 8 to 16 hours. This allows some margin of response time in the unlikely event that both conveyors are down at the same time. Spare parts and maintenance capacity needs to be planned so that the storage capacity allows enough time for repair or replacement of any key component.

Capital Vs. Operating Costs

Making capital decisions that increase the operating budget to meet approved capital spending limits is unfortunately a common practice that can have disastrous effects. Once production starts, there is never enough time or money to correct an under designed bulk material handling system. All efforts are focused on cleanup, unplugging chutes, unplanned maintenance, and just getting enough material into the process to keep it running. Critical components like the belt are often damaged and their life shortened, further increasing operating costs.

While bulk material handling systems are often only a small percentage of the initial cost of an overall project, if not properly designed and maintained, they are often the main reason for delayed start up and under capacity performance. A well thought out and properly designed conveyor system, with consideration to future demands included in the original design, will always pay for any additional up-front capital costs vs. deferring necessary costs to future operating budgets.

WWW.CEMANET.ORG has issued this document (14604) on Apr 4, 2017 to Pattanaporn Sirirakool, Siriluck, Thailand

Introduction	**Pg 50**
Material Characteristics	**Pg 50**
Material Class Description	**Pg 51**
Behavior of Materials on a Moving Belt	**Pg 54**
Effect of Inclines and Declines	**Pg 54**
Spill Lift-Off Example	

WWW.CEMANET.ORG has issued this document (14604) on Apr 24, 2017 to Pattarapom Sritrakool, Suanluang, , , Thailand

INTRODUCTION

The successful design of a conveyor belt must begin with an accurate appraisal of the characteristics of the material to be transported. The behavior and state of bulk materials greatly depend on the moisture content and particle size distribution of the material. Such wide variations in material behavior and bulk density can lead to unexpected tonnage or capacity issues, excessive spillage or material buildup, and equipment or system malfunction and failure.

MATERIAL CHARACTERISTICS

A number of parameters are commonly used to describe material flow behavior; internal friction, cohesive and adhesive strength, flowability, interface friction, angle of repose, particle size distribution, and bulk density. All of these are affected by variations in moisture content and by the stress history of the material (loading and unloading conditions during transport).

- Internal friction - the friction of the material on itself
- Cohesive strength - the degree to which individual particles stick tend to stick together
- Adhesive strength - the degree to which the bulk solid tends to stick to surfaces or the belt
- Flowability - the freedom of particles to move when acted upon by gravity or an external force
- Angle of repose - the angle between horizontal and the slope of a pile of bulk material
- Interface friction - friction between the bulk material and a surface such as a chute wall or the belt
- Surcharge angle - the angle tangent to the idealized surface of the bulk material being conveyed
- Particle size distribution - percentage of material retained on each of a series of standard screens
- Bulk density - the weight per unit volume of the bulk material in an uncompacted state

A variety of test methods have been used to measure these properties and and define these behavioral parameters. Simplified test methods can be used to obtain some of the parameters such as angle of repose and bulk density, but the majority of the parameters must be obtained using more elaborate testing methodology and equipment. Two such methods are outlined in ASTM D6128-06 and ASTM D6773-08. Other test methods are available as well. Reference CEMA Standard 550 Classification and Definitions of Bulk Materials for a complete set of tests and methodology for classifying bulk materials.

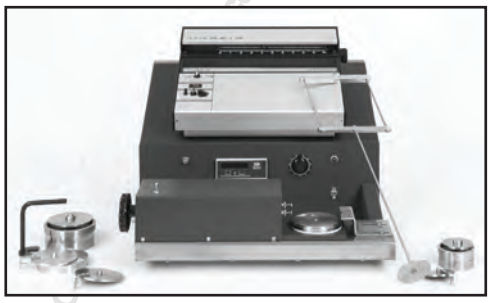

Figure 3.1
ASTM D6128-06 tester



Figure 3.2
Close up of ASTM D677-08 cell

Common practice involves the physical testing of the conveyed material at a number of moisture contents, investigating the effects of time on material behavior. Depending on the actual process or system requirements, testing can also be performed at elevated temperatures and for various particle size distributions.

Some of the more readily determinable material properties will be discussed in more detail here as they suggest the likely behavior of the material on a conveyor belt, but it is important to realize that the true nature and behavior of the material is in no way fully described by these parameters.

The angle of repose of a material is the natural angle formed by gravity discharge of the material and measured from a horizontal base. The angle of surcharge of a material is the angle to the horizontal which the surface of the material assumes while the material is at rest on a moving conveyor belt. This angle is usually 5 degrees to 15 degrees less than the angle of repose, though in some materials it may be as much as 20 degrees less.

Flowability can be qualitatively assessed by considering material characteristics such as size and shape of fine particles and lumps, roughness or smoothness of the surface of the material particles, proportion of fines and lumps present, and moisture content of the material. Quantitative assessment of flowability requires the determination of many of the behavioral properties discussed above.

Flow					
Very Free Flowing 1*	Free Flowing 2*	Average Flowing 3*			Sluggish 4*
Equivalent Flow Function Ranges (FF)					
> 10	> 4 to < 10	> 2 to < 4			< 2
Angle of Surcharge (degrees)					
5°	10°	15°	20°	25°	30°
	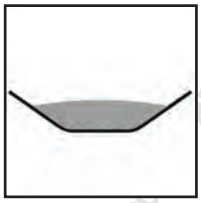			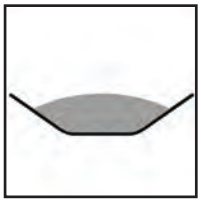	
Angle of Repose (degrees)					
10° to 19°	20° to 25°	26° to 29°	30° to 34°	35° to 39°	> 40°
Uniform size, very small rounded particles, either very wet or very dry such as dry silica sand, cement, wet concrete etc.	Rounded, dry polished particles of medium weight such as whole grain and beans, etc.	Regular granular materials such as fertilizer, sand and washed gravel, etc.	Irregular, granular or lumpy materials of medium weight, such as anthracite coal, cotton seed meal, clay, etc.	Typical common bulk materials such as bituminous coal, stone, most ores, etc.	Irregular., stringy, fibrous, sticky materials such as wood chips, bagasse, tempered foundry sand, etc.
*Numerical Rating refers to Material Class Descriptions					

Table 3.3
Table of flowability

MATERIAL CLASS DESCRIPTION

Consideration should also be given to the dustiness of the material, whether it is corrosive or explosive, temperature ranges, moisture content ranges, and any other process or environmental effects that may affect the flow behavior of the material. Some general information concerning these properties is given in Table 3.4. Table 3.5 gives a list of materials with their physical characteristics and classification code designations. It must be understood that the data given in this table are for average conditions and average materials, and should be used as guidelines only. Each characteristic may vary in specific applications and instances, and many important behavioral parameters are not listed.

Material	Characteristics	Code
Size	Very Fine - 100 Mesh and Under	A
	Fine - 1/8-inch (3 mm) and Under	B
	Granular - Under 7-inch (178 mm)	C
	Lumpy - Containing Lumps Under 16-inch (406 mm)	D
	Irregular - Stringy, Interlocking, Mats Together	E
Flowability Angle of Repose	Very Free Flowing - Angle of Repose < 19 deg.	1
	Free Flowing - Angle of Repose 20 to 29 deg.	2
	Average Flowing - Angle of Repose 30 to 39 deg.	3
	Sluggish - Angle of Repose > 40 deg.	4
Abrasiveness	Nonabrasive	5
	Abrasive	6
	Very Abrasive	7
	Very Sharp - Cuts or Gouges Belt Covers	8
Miscellaneous Characteristics (More than one may apply)	Very Dusty	L
	Aerates and Develops Fluid Characteristics	M
	Contains Explosive Dust	N
	Sticky - Adheres Easily	O
	Contaminable, Affecting Sale or Use	P
	Degradable, Affecting Sale or Use	Q
	Gives Off Harmful Fumes or Dust	R
	Highly Corrosive	S
	Mildly Corrosive	T
	Hygroscopic	U
	Interlocks or Mats	V
	Oils or Chemicals Present - May Affect Rubber	W
	Packs Under Pressure	X
	Very Light and Fluffy - May be Wind Swept	Y
	Elevated Temperature	Z

Table 3.4
CEMA material classification code system

Proper consideration must be given to those materials, the characteristics of which may vary under a range of conditions of handling, atmospheric humidity, age, or long storage. In many cases, accuracy in design may require that carefully conducted tests be run to establish the material characteristics under the required conditions. CEMA Standard 550, Classification and Definitions of Bulk Materials, gives detailed explanations and references used for establishing the CEMA material classification code. CEMA Standard 550 classifies over 500 bulk materials. Materials or characteristics omitted from the latest version of CEMA Standard 550 may be roughly appraised by comparison with listed materials of the same general type. For design purposes it is always recommended that the actual bulk solid be tested. Table 3.5 lists some common materials and their CEMA classifications.

Material Description	Loose Bulk Density lbf/ft^3 (kgf/m^3)	CEMA Material Code	Angle of Repose (deg.)	Maximum Allowable Angle of Conveyor Inclination (deg.)
Alumina	55-66 (881-1057)	58(B_6)27MY	22	12
Bark, Wood, Refuse	10-20 (160-320)	15(E)45TVY	45	27
Bentonite, 100 mesh	50-60 (801-961)	55(A_{100})25MXY	42	20
Cement, Clinker	75-95 (1201-1522)	85(D_3)36	30-40	18-20
Coal, Powder River Basin	40-55 (641-881)	50(D_3)5LV	38	15
Coal, Bituminous, Mined	45-55 (721-881)	50(D_x)35	38	15
Coal, Lignite	37-45 (593-721)	41(D_3)35TN	38	15
Coke, Petroleum, Shot	45-63 (721-1009)	50(C_3)6LTWZ	35-40	11
Coke, Petroleum, Sponge	45-63 (721-1009)	50(C_3)6LTWZ	35-40	14
Coke, Petroleum, Fluid	58-63 (929-1009)	61(B_4)6LMTWYZ	25-35	*
Copper, Ore	120-150 (1922-2403)	125(D_x)36	30-44	20
Cullet, Fines	80-120 (1281-1922)	120($C_{½}$)37	30-44	20
Earth, Wet, Containing Clay	100-110 (1602-1762)	105(D_{16})46OV	45	23
Gravel, Pebbles	90-100 (1442-1602)	95(D_3)27	30	12
Kaolin, Clay, 3-inch & Under	63 (1009)	63(D_3)25	35	19
Lime, Hydrated	40 (641)	40(B_6)35LM	40	21
Limestone, Crushed	85-90 (1362-1442)	88(D_x)36	38	18
Phosphate Rock, Pulverized	60 (961)	60(B_6)36	40	25
Rice, Hulled	45-49 (721-785)	47($C_{½}$)25P	19	8
Sand, Foundry, Prepared	65-75 (1041-1201)	70(B_6)47X	30-44	24
Taconite, Pellets	116-130 (1858-2082)	123(D_3)17Q	30-44	13-15
* Normally pneumatically conveyed				

WWW.CEMANET.ORG Downloaded this document (1460) on Apr 24, 2017 by Supon Sirikoolsuebsang, , , Thailand

Table 3.5
Excerpt of CEMA Standard 550: CLASSIFICATION & DEFINITIONS OF BULK MATERIALS

BEHAVIOR OF MATERIALS ON A MOVING BELT

Attention must be drawn to the fact that the normal characteristics of materials are considerably influenced by the movement, slope, and speed of the conveyor belt that carries them. As the conveyor belt passes over each successive carrying idler, the material being carried is correspondingly agitated, and the load profile of the material on the belt is changed. This change in profile is influenced by such factors as vertical and horizontal curves in the belt direction, idler trough angle and configuration, belt inclination, belt sag, belt tension, belt velocity, belt misalignment and vibrations arising from the movement of the belt and support idlers.

Typically, the bulk solid is loaded onto the conveyor belt in a loose and unpacked state, with a load profile governed on the lower surface by the profile of the conveyor belt, and an upper profile governed by the material's angle of repose. As the material is conveyed, it will soon settle into its equilibrium, or packed, condition as a result of the factors given above. The upper surface can then be approximated using the angle of surcharge rather than the angle of repose. Segregation of the material will also occur with the larger lump sizes migrating towards the upper surface of the load profile, and the fines migrating towards the belt.

In general, the amount of settling that occurs during transport can be estimated to be in the range of 10 to 15%. Using the load calculations given in chapter 4 (Figure 4.2) the load profile change can be estimated by assuming the upper surface is formed at the angle of repose in an unsettled or loose state, and at the angle of surcharge in a settled or packed state. This is depicted in Figure 3.6. Note that, in addition to profile change, the bulk density of the conveyed material will change due to external forces arising from the conditions described above. The density change due to conveying is also in the range of 10 to 15%. In effect, during conveying the load profile will decrease in area by ~10 to 15% and the bulk density will increase ~10 to 15%. For capacity and equipment calculations, it is important to know the variation in bulk density in loose and packed states, the angle of repose and surcharge, and the particle size distribution of the conveyed material. Once again, these factors are greatly influenced by the moisture content of the conveyed material.

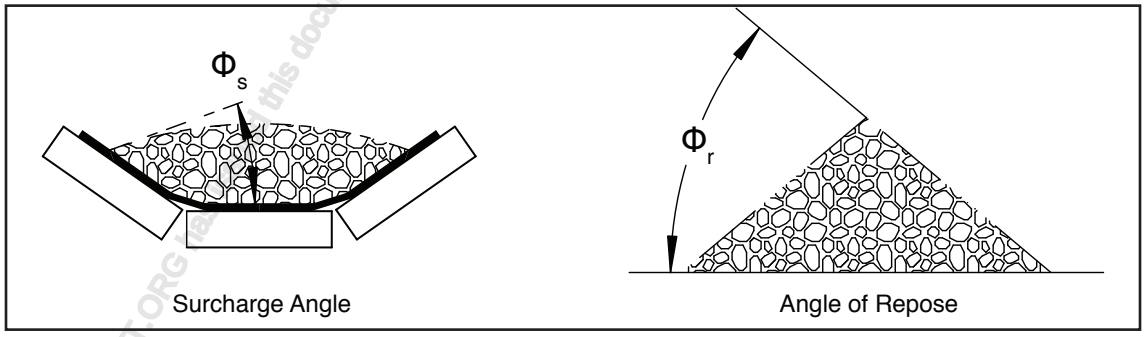

Figure 3.6
Angle of surcharge, Φ_s, load on belt and angle of repose, Φ_r, material in a pile

EFFECT OF INCLINES AND DECLINES

The nominal cross section of the material on a horizontal conveyor belt is measured in a plane normal to the belt. On an inclined or declined conveyor belt, gravity necessitates that the actual cross section of the load be considered in a vertical plane. To maintain the total width of the material load on the belt and to maintain unchanged surcharge angles, the cross section of the load possible on an inclined or declined belt must be less than that of a horizontal belt.

Referring to the diagram used in the derivation of belt conveying capacity (Chapter 4, Figure 4.7) the trapezoidal area does not change, although the area represented by a segment of a circle formed by the surcharge does decrease as the cosine of the conveyor slope. The total effect is influenced by the surcharge angle at which the material will ride on the conveyor belt. The actual loss of capacity is usually less than 3 percent.

Some materials or lump shapes present special problems for inclined and declined belts. Common solutions to these problems are reducing the slope angle or using cleated belts. Precautions to consider for establishing the slope of inclined and declined belts:

- Lumps are more likely to roll off the edges of inclined conveyor belts than horizontal ones.
- The spillage of material is more likely to occur immediately beyond the loading point where local accelerations/decelerations cause turbulence in the material.
- Materials which aerate excessively, such as very fine ground cements, or materials in which the proportion of water is so high that a slurry is created, tend to slide or flood uncontrollably
- Round or cylindrical shapes tend to roll/bounce down the conveyor

Critical relationships between belt velocity, material conveyed, and conveyor setup must be maintained to avoid spillage/lift-off and slip-back of the material on inclined or declined belts. Spillage/lift off refers to the bed of bulk solid becoming airborne at the carrying idlers at a critical speed. Slip-back refers to the bulk solid not staying in contact with the belt, but sliding backward opposite the conveying direction. Materials having the tendency to slip-back are sometimes loaded at a low incline angle and then the conveyor incline is increased using a concave curve, counting on a continuous feed to keep the material on the more steeply inclined section from slipping back. Simplified relationships for the maximum belt velocities attainable before material slip or spillage occurs on inclined or declined belts are given by:

$$V_{slip\text{-}back} = \sqrt{\frac{S_i}{2\pi^2 \times Y_s}\left[g \times \left(\cos(\theta_{belt}) - \frac{1}{\mu_e}\sin(\theta_{belt}) + \frac{\sigma_0}{\gamma_m \times h}\right)\right]}$$

Equation 3.7

$V_{slip\text{-}back}$, maximum belt speed before material slip-back occurs

$$V_{spill/lift-off} = \sqrt{\frac{S_i}{2\pi^2 \times Y_s}\left[g \times \left(\cos(\theta_{belt}) + \frac{\sigma_0}{\gamma_m \times h}\right)\right]}$$

Equation 3.8

$V_{spill/lift\text{-}off}$, maximum belt speed before material spill (lift-off) occurs

WWW.CEMANET.ORG has issued this document (1460) to [illegible] Suarez), Suarez, , Thailand

Where:

S_i = Idler spacing Ref. Chapter 5

Y_s = Ratio of belt sag to idler spacing (dimensionless)

Note: when expressed as % $y_s = \frac{Y_s}{S_i} \times 100$

g = Acceleration due to gravity

θ_{belt} = Belt incline angle

γ_m = bulk density of the bulk material conveyed

σ_0 = Adhesive stress between the bulk material and the belt

μ_e = Interface frcition coefficient of friction between the belt and bulk material (dimensionless)

h $= b_{wmc} \times \sin(\beta) + \frac{(b_c + 2 \times \cos(\beta)) \times \tan(\Phi_s)}{6}$ (Effective height of the bulk material on a belt with a three equal roll troughing idler)

Ref. Chapter 4 Equations: 4.20 for b_c and 4.30 for b_{wmc}

β = Idler wing roll inclination (troughing angle)

Φ_s = Surcharge angle of the bulk material on the belt

Note that these relationships hold for points well beyond the loading zone. To estimate critical belt velocities in and immediately following the load zone, values for the above parameters must be determined in the load zone. For example, values for the load zone belt angle, idler spacing and belt sag in the load zone must be used. Material properties such as loose material density, material-belt interface friction, and angle of repose rather than angle of surcharge must be used as well. Other considerations in the load zone must also be considered to avoid spillage, such as impact effects, belt support, and the presence of sealing systems. In addition, some materials exhibit fluid-like behavior and have a tendency to flow at much lower values of friction than one would expect at the material/belt interface. As always, material and interface properties are greatly affected by moisture content and particle size. The values S_i, Y_s and θ_{belt} must relate to the conveyor design parameters. The values γ_m, and σ_0 for the bulk solid and the value μ_e for the belt and bulk material interface must be obtained through testing for each bulk material and belt condition.

WWW.CEMANET.ORG (ASEAN Cement Industry Project (ACIP)) on Aug 2, 2010 to Pattaraporn Chaikool, Suanluang, , , Thailand

Spill/Lift-off Example

S_i = 4 ft (1.2 m)

Y_s = 0.02, 0.03 (y_s = 2%, 3%)

θ_{belt} = 15°

$\sigma_0 = 10 \frac{lbf}{ft^2}$

$\gamma_m = 60 \frac{lbf}{ft^3}$

h = 0.75 ft

If sag is 2% Y_s = 0.02

$$V_{spill\text{-}2\%sag} = \sqrt{\frac{S_i}{2\pi^2 \times Y_s}\left[g \times \left(\cos(\theta_{belt}) + \frac{\sigma_0}{\gamma_m \times h}\right)\right]}$$

$$V_{spill\text{-}2\%sag} = 60\frac{s}{min} \times \sqrt{\frac{4\ ft}{2\pi^2 \times 0.02}\left[32.2\ \frac{ft}{s^2} \times (0.9659) + \frac{10\frac{lbf}{ft^2}}{60\frac{lbf}{ft^3} \times 0.75\ ft}\right]} =$$

$$V_{spill\text{-}2\%sag} = 60 \times \sqrt{10.13 \times [31.10 + 0.22]} = 1{,}069 \text{ fpm } (5.4 \text{ m/s})$$

If sag is 3% Y_s = 0.03

$$V_{spill\text{-}3\%sag} = 60 \times \sqrt{\frac{4}{2\pi^2 \times 0.03}\left[32.2 \times (0.9659) + \frac{10}{60 \times 0.75}\right]} =$$

$$V_{spill\text{-}3\%sag} = 60 \times \sqrt{6.75 \times [31.10 + 0.22]} = 872 \text{ fpm } (4.4 \text{ m/s})$$

Figure 3.9
Example Spill/Lift-Off calculation

WWW.CEMANET.ORG has issued this document (14504) on April 4, 2017 to Pattarakorn Sritrakool, Suanluang, , , Thailand

WWW.CEMANET.ORG has issued this document (1460) on Apr 24, 2017 to Pattarapom Sritrakool, Suanluang, , , Thailand

This Page Left Intentionally Blank

Introduction Pg 60
Belt Widths Pg 60
Lump Size Considerations
Belt Speeds Pg 61
Higher Belt Speeds
Lower Belt Speeds
Troughed Belt Bulk Material Cross Sections Pg 64
CEMA Minimum Belt Edge Distance
Cross Sectional Dimensions
Cross Sectional Dimensionless Ratios
CEMA Standard Capacity Cross Sectional Area, A_s
Example: CEMA Standard Capacity Cross Sectional Area, A_s
Non-Standard Edge Distance
Example: Non-Standard Edge Distance
Height of Bulk Material between Skirtboards, D_s and D_{ms}
Example: Height of Bulk Material between Skirtboards
100% Full, Edge to Edge, Cross Sectional Area, A_f
Example: 100% Full, Edge to Edge, Cross Sectional Area, A_f
Belt Conveyor Capacities Pg 79
General Applications: Capacity Derating
Coal Fired Power Generating Plant: Capacity Derating
Example: Capacity Derating
Belt Conveyor CEMA Standard Area and Capacity Tables Pg 81

WWW.CEMANET.ORG has issued this document (1400) to A4, 2770 Kittipong Chitrakool, Suanluang, , , Thailand

INTRODUCTION

Conveyor capacity generally increases with belt width and speed. The CEMA approach is to design the conveyor based on design requirements, standardized dimensional relationships and common industry practices, to provide combinations of belt speed and width that have proven suitable for most bulk material applications. Consideration must be given to spillage, dust and excessive wear that can be created by misalignment, overloading, excessive belt sag, narrow belts or high belt speeds.

BELT WIDTHS

The width of a belt for a specific application is governed by many factors. Belts must be wide enough so that any combination of lumps and finer material does not create spillage by allowing loading too close to the edge of the conveyor belt. The width of the loading chute must be sufficient to pass various combinations of lumps without jamming. To address these issues and arrive at a conservative conveyor design CEMA recommends standard dimensions for a given belt width, idler geometry and maximum belt speeds for various applications.

The width of conveyor belts generally available in the United States is customarily expressed in inches. The common US belt widths and metric belt widths are listed in Table 4.1. Common metric and standard US belt widths do not correspond exactly. Configurations for metric or custom belt widths can be designed using the concepts discussed in this chapter as well as throughout this book.

Standard US Belt Widths, BW in (mm)	Common Metric Belt Widths, BW mm (in)
18 (457)	500 (19.7)
24 (610)	600 (23.6)
30 (762)	800 (31.5)
36 (914)	1000 (39.4)
42 (1067)	
48 (1219)	1200 (47.2)
54 (1372)	1400 (55.1)
60 (1524)	1600 (63.0)
72 (1829)	1800 (70.9)
84 (2134)	2000 (78.7)
96 (2438)	2400 (94.5)
108 (2743)	2800 (110.2)
120 (3048)	3000 (188.1)

Table 4.1
Belt widths

Lump Size Considerations

The lump size influences the belt specifications and the choice of carrying idlers. There is an empirical relationship between lump size and belt width. The recommended maximum lump size for various belt widths is as follows: for a 20-degree surcharge, with 10 percent lumps and 90 percent fines, the recommended maximum lump size is one third of the belt width (BW/3); for all lumps and no fines, the recommended maximum lump size is one-fifth of the belt width (BW/5); for a 30-degree surcharge, with

WWW.CEMANET.ORG has issued this document (4th Ed. 2024) to Pittsburgh Stainless Equipment Corp. Unauthorized distribution prohibited.

10 percent lumps and 90 percent fines, the recommended maximum lump size is one-sixth of the belt width (BW/6) and, for all lumps and no fines, the recommended maximum lump size is one-tenth of the belt width (BW/10). Alternately, the belt width for a specific lump size is illustrated in Figure 4.2. This simple chart shows the belt width necessary for a given size lump, for various proportions of lumps and fines, and for various surcharge loadings. Fines size is no greater than 1/10 the maximum lump size.

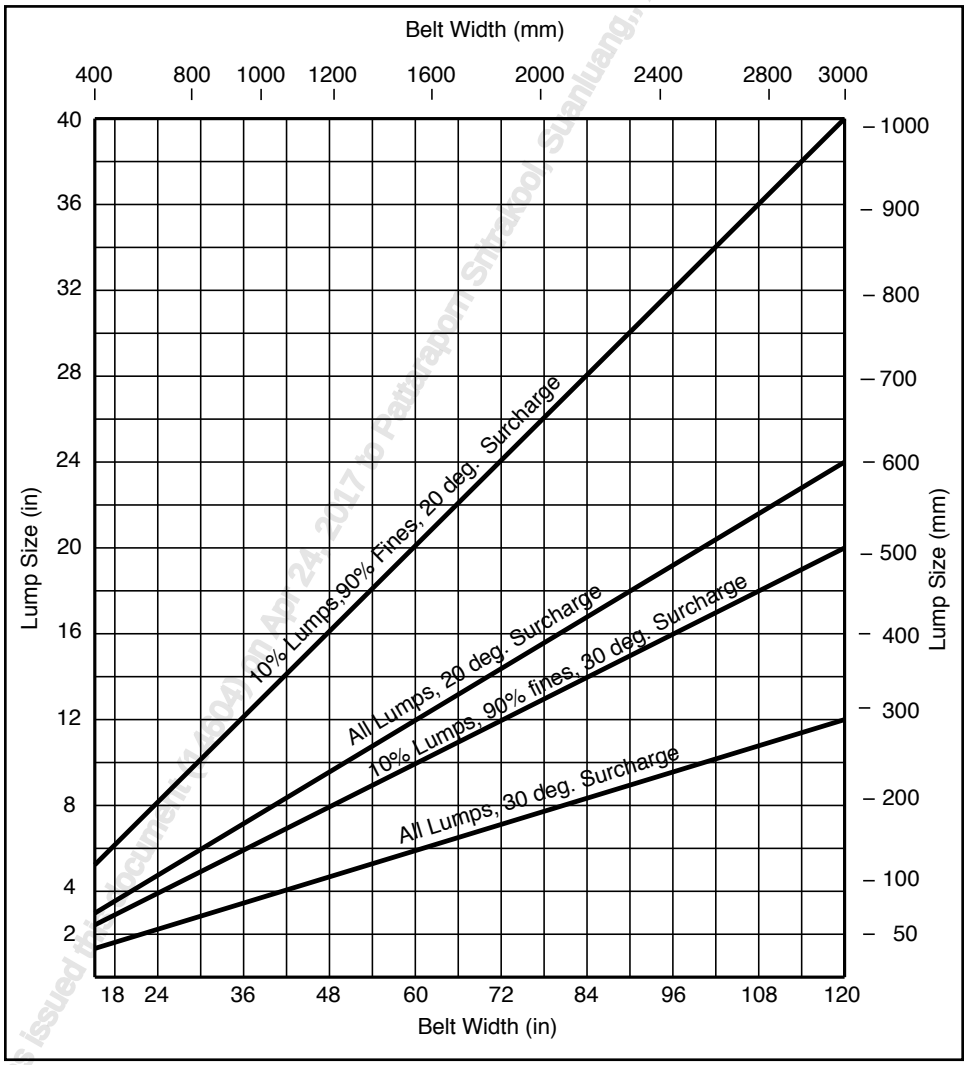

Figure 4.2
Belt width necessary for a given lump size

BELT SPEEDS

Suitable belt conveyor speed depends largely upon the characteristics of the material to be conveyed along with belt width, capacity, belt tensions and loading/unloading equipment. Each application must be evaluated on these technical issues as well as on capital cost, operating conditions and maintenance considerations. The current highest speed conveyor is a 110-inch (2800 mm) wide belt operating at 2,950 fpm (15 m/s) used in handling overburden in open pit lignite mining. While the trend is toward narrower belts at higher speeds to optimize the capital cost of a conveyor system, high speed and narrow belts can result in loading problems, increased wear and material degradation which is problematic for installations concerned about conveyor availability, bulk solid degradation and release of fugitive materials. CEMA recommendations for the maximum operating speeds of belt conveyors are shown in Table 4.3.

www.CEMANET.ORG has issued this document to [illegible] on Apr 24, 2017

Application	Common Belt Speed Ranges	Limiting Factor(s)
Free flowing non-abrasive materials like whole grains	400 to 1200 fpm (2.0 to 6.0 m/s)	Material degradation and dust generation
Clay, soft ores, overburden and earth, fine crushed stone.	600 to 1400 fpm (3.0 to 7.0 m/s)	Material degradation, dust generation and component wear
Heavy, hard, sharp edged ore, coarse crushed stone, refuse	400 to 1200 fpm (2.0 to 6.0 m/s)	Belt and chute wear, noise
Coal, lignite, petroleum coke	500 to 1400 fpm (2.5 to 7.0 m/s)	Material degradation, dust generation, spillage and noise
Wood chips, biomass and bagasse	200 to 500 fpm (1.0 to 2.5 m/s)	Dust generation and chute pluggage
Lime, clinker and cement	400 to 800 fpm (2.0 to 4.0 m/s)	Dust generation and component wear
Discharge by belt plows	200 to 400 fpm (1.0 to 2.0 m/s)	Discharge spillage, plow and belt wear
Belt feeders	50 to 100 fpm (0.25 to 0.5 m/s)	Liner and belt wear
Stackers, reclaimers and loaders	400 to 1000 fpm (2.0 to 5.0 m/s)	Material degradation, dust generation, spillage and noise
Trippers	300 to 500 fpm (1.5 to 2.5 m/s)	Dust generation and spillage
Overland conveyors	1000 to 2000 fpm (5.0 to 10.0 m/s)	Conveyor path, material degradation, dust generation, spillage and noise

Table 4.3
Recommended belt speed ranges

Higher Belt Speeds

An increase in belt speed permits decreases in belt width and belt tension, and will generally require lower capital costs. Designers have been known to use speeds as much as 50% higher than those shown in Table 4.3. Higher belt speeds may be suitable when:

- Conveying length is very long > 5,000 ft (1,525 m).
- Loading and unloading points are well designed and material is directed onto the belt near the same speed as the receiving belt and in the same direction.
- The material has smaller lump sizes
- The belt is suitably tensioned to limit sag levels less than those described in Chapter 6.
- Critical liftoff speeds over the idlers are much greater than the selected speed as discussed in Chapter 3.

WWW.CEMANET.IR Has issued this document (14604) on Apr 24, 2016 for the exclusive use of Entrakool, Suanluang, Thailand

However, the benefits of higher speeds must be weighed against the possible disadvantages of:

- Increased belt wear
- Material degradation and dust generation
- Wind losses
- Lump impact on carrying idlers
- Higher loading/unloading transfer maintenance
- Generally reduced life of all conveyor components

Other design issues that must be considered when belt speeds exceed Table 4.3 are:

- Idler dimensional tolerances
- Installation tolerances
- Belt transverse vibrations (belt flap)
- Noise level
- Surge loading resulting in spillage and plugging

Consult a CEMA Member company when considering operation at the highest ends of the speed recommendations or beyond.

Lower Belt Speeds

Consideration should be given to using the lower end of the speed range for special material conditions as follows:

- Powder or fine materials should be conveyed at speeds low enough to minimize dusting, at the loading and discharge points.
- Fragile materials also limit belt speeds. Low speeds are necessary so that degradation of fragile materials is mitigated at the loading and discharge points, as the conveyor belt and as the material being carried moves over the idlers. Degradation can be reduced with the use of engineered chutes.
- Heavy, sharp-edged materials should be carried at moderate speeds. This is good practice because the sharp edges are likely to wear the belt cover unduly, particularly if the loading velocity of the material in the direction of belt travel is appreciably different than the receiving belt speed.
- Hazards associated with material spillage, leakage and dust generation are of general concern in all applications for safety and housekeeping and special concern, in certain applications, such as in coal or grain handling applications.

WWW.CEMANET.ORG has issued this document (4603) on 12/28/2017 to Patarapol Chitrakool, Sualuang, , , Thailand

TROUGHED BELT BULK MATERIAL CROSS SECTIONS

The conveyed cross section must be less than the allowable cross section which varies with belt width and several practices that have shown to produce safe designs. The CEMA standard cross sectional area is calculated using the standard edge distance, the geometry of the standard three equal roll troughing idler and a semicircular profile of the bulk material top surface cross section whose outer edge is tangent to the angle of surcharge. There are several cross section conditions that must be considered in the conveyor design. During loading with conventional chutes, there is often a turbulent transition, a profile confined by the skirtboards and finally the unconfined condition on the belt where the bulk material cross section at the angle of repose settles to a steady state profile governed by the surcharge angle. A 100% full, edge to edge, belt loading is used for determining the maximum loads for structural design.

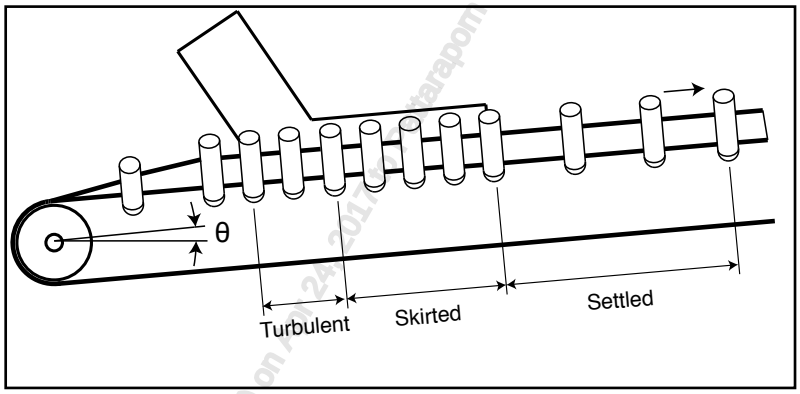

Figure 4.4
Cross sectional area profiles

The conveyed bulk material cross sectional area, A, can be calculated from the design inputs for tonnage, Q, belt speed, V, bulk density, γ_m, and $\Theta = 0$ degrees.

$$A = \frac{Q}{V \times \gamma_m}$$

Equation 4.5
A, cross sectional area of bulk material based on design inputs

Where:

A = Conveyed cross sectional area of the bulk material normal to the belt velocity direction $[ft^2 (m^2)]$

γ_m = Conveyed bulk density of the bulk material as defined in CEMA 550, Classification and Definitions of Bulk Materials

Q = Quantity of bulk material conveyed based on design requirements $\left[tph; \frac{2000\ lbf}{h} \left(mtph: \frac{1000\ kgf}{h}\right)\right]$

V = Belt speed $\left[fpm: \frac{ft}{min} \left(m/s: \frac{m}{s}\right)\right]$

For a given speed and bulk material, belt conveyor capacity increases as the belt width increases. Also, the capacity of a belt conveyor depends on the bulk material surcharge angle, the troughing angle of the idlers and the bulk density. On an inclined or declined conveyor, the material tends to conform to its surcharge angle as measured in a vertical plane. This decreases the surcharge angle used in cross sectional

WWW.CEMA.ORG has issued this document (3604) on ... 24, 2017 ... Sirapop Sirabodee ... Thailand

area calculations as the cosine of the angle of conveyor slope, Θ. However, in most cases, the actual loss of capacity is small. Assuming a uniform feed to the conveyor, the cross-sectional area of the bulk material load on the conveyor belt is the main determinant of the belt conveyor capacity.

For initial conveyor design purposes, the bulk material CEMA standard cross sectional area is assumed to be equal to A_s which is determined by the CEMA standard belt edge, B_{we}, the circular top surface defined by surcharge angle, Φ_s, the geometry of a CEMA three equal roll troughing idler and the bulk density, γ_m.

CEMA Minimum Belt Edge Distance

The material load on the troughed belt does not extend to the belt edges to give a safety margin to catch rogue particles or lumps and thereby minimize fugitive material loss from the conveyor. The minimum distance from the edges of the material load to the edges of the belt for Imperial belt widths is set at "CEMA standard edge distance," which is defined as $B_{we} = 0.055 \times BW + 0.9$ inch, where BW is the width of the belt in inches. See Equation 4.12. ISO standard belt edge distance for metric belts ≤ 2000 mm is [BW-(0.9 BW - 50 mm)]/2 and for belts > 2000 mm it is [BW- (BW - 250 mm)]/2.

Belt Width, BW (in)	18	24	30	36	42	48	54	60	72	84	96	108	120
Standard Edge Distance (in)	1.89	2.22	2.55	2.88	3.21	3.54	3.87	4.20	4.86	5.52	6.18	6.84	7.50
*Belt Width, BW (mm)	500	600	800	1000	N/A	1200	1400	1600	1800	2000	2400	2800	3000
*Standard Edge Distance (mm)	50	56	67	78	N/A	89	100	111	122	133	155	177	188
* Imperial and metric belt widths and standard edge distances do not correspond exactly. Calculated using the CEMA standard belt edge formula													

Table 4.6
CEMA standard belt edge distance

Throughout this manual the standard edge distance applies to the CEMA standard design cross section, A_s. The actual belt edge distance is determined from the final belt width, troughing angle and belt speed selections using the conveyed cross sectional area, A.

Cross Sectional Dimensions

The cross sectional variables and their dimensionless equivalents in this section define the terms used throughout the rest of this manual.

For initial conveyor design purposes, the bulk material CEMA standard cross sectional area is assumed to be equal to A_s which is determined with B_{we} equal to the CEMA standard belt edge, the circular top surface defined by surcharge angle, Φ_s, the geometry of a CEMA three equal roll troughing idler, the bulk density, γ_m, and the angle of incline, $\Theta = 0$ degrees.

Typically, areas are in units of ft^2 or m^2 and linear dimensions in inches or millimeters. Angles are in degrees when used with a trigonometric function and in radians when used without a trigonometric function. The selection of the number of significant digits used in the intermediate calculations will have an effect on the final results. Many of the inputs used in conveyor design are often not known or specified accurately enough to justify use of an excessive number of decimal places in the calculation inputs. For these reasons final results are typically rounded to values that are appropriate for their application or use in other calculations.

www.BELMAG.com Belt Width Document (4.960) as of Apr 24, 2011 Paperport Images Subject to Change

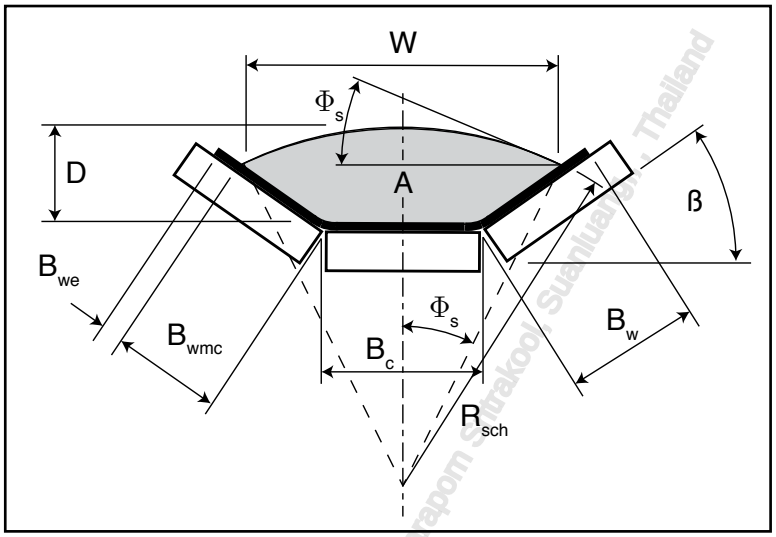

Figure 4.7
CEMA standard cross sectional area, A, nomenclature

For purposes of calculating the depth of material in contact with the skirtboards, the cross section area is assumed to be the same as that in the steady state loaded profile.. The CEMA standard skirtboard width, W_s, is 2/3 BW.

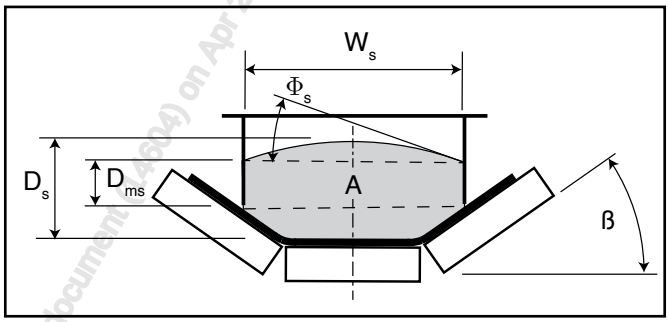

Figure 4.8
Skirted bulk material profile nomenclature

The depth of bulk material rubbing on the skirtboards, D_{ms}, is used in Chapter 6 to determine the change in tension, ΔT_{sn}, due to the friction between the bulk material and the skirtboards.

The bulk density in the turbulent region can be a factor in the design of the enclosure and height of the skirtboards (depending upon the design of the chute, loading angles and the nature of the bulk material), and can be 3 to 40% less (3 to 40% greater volume) than the loose bulk density. As the material is conveyed, particularly on long conveyors, the bulk material can consolidate and approach the vibrated bulk density. Loose and vibrated bulk densities are defined in CEMA Standard 550, latest version.

www.CEMA.org Proprietary to this document (4604) on Apr 24, 2015 to Pattarapom Surakool, Suanluang, Thailand

The edge to edge cross sectional area, A_f, is used to determine loads on the conveyor structure.

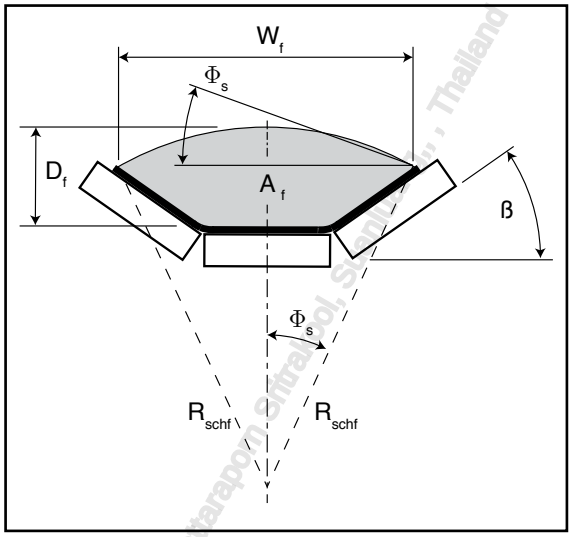

Figure 4.9
A_f, Cross sectional area, edge to edge of 100% full belt nomenclature

Cross Sectional Dimensionless Ratios

Profiles based on CEMA standard idlers are presented, but the use of dimensionless ratios and generalized equations allows the application of the formulas to non standard idler profiles, areas and edge distances. One example of this is the calculation in the section, 100% full edge to edge belt, where the edge distance represented by dimensionless ratio, b_{we}, is set to zero, making b_{wmc} equal to b_w in the equations.

Calculation of the bulk material cross sectional areas are based on the geometry of the belt's carrying surface. Dimensionless ratios b, b_c, b_w, b_{we}, b_{wmc}, d, d_{ms}, d_s, r_{sch} and w times the belt width, BW, are used to define the specific cross sectional dimensions in Figures 4. 7 through 4.9. For example $B_c = b_c \times BW$. For the following calculations, the idler is assumed to be vertical, the center roller level, and the conveyor horizontal, with the belt centered on the idler. The slope of the conveyor reduces the effective area by the cosine of the conveyor slope times the surcharge circular segment portion of the total cross sectional area.

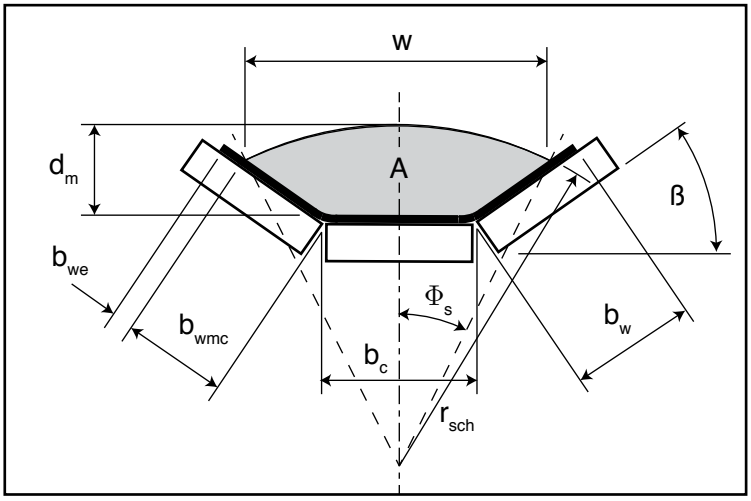

Figure 4.10
CEMA cross sectional area dimensionless ratio nomenclature

WWW.CEMANET.ORG has issued this document on Apr 19, 2017 to Pattarapon Chiralerpol, Siam Cement Group, , Thailand

The standard center roller dimensionless ratio for b_c is based on an analysis of the three equal roll troughing idlers of eight CEMA Member manufacturers. The belt radius at the juncture of the center rolls and wing rolls of troughed idler sets is ignored for cross sectional area calculations.

$$b_c = \frac{0.371 \times BW\ (in) + 0.25\ (in)}{BW\ (in)}$$

or:

$$b_c = \frac{0.371 \times BW\ (mm) + 6.35\ (mm)}{BW(mm)}$$

Equation 4.11

b_c, Dimensionless ratio for length of center roll of CEMA standard three equal roll troughing idler

$$b_{we} = \frac{0.055 \times BW\ (in) + 0.9\ (in)}{BW\ (in)}\ \text{(dimensionless)}$$

or:

$$b_{we} = \frac{0.055 \times BW\ (mm) + 22.9\ (mm)}{BW\ (mm)}\ \text{(dimensionless)}$$

Equation 4.12

b_{we}, dimensionless ratio of CEMA standard edge distance to belt width
The value of b_{wmc} is determined by subtraction when b_{we} is set to the standard edge distance or from the actual cross section area ,A, for the non standard edge distance.

$$b_w = b_{we} + b_{wmc} = \frac{1 - b_c}{2}$$

Equation 4.13

b_w, Dimensionless ratio of the width of the belt above troughing idler wing roll to belt width

$$r_{sch} = \frac{\frac{b_c}{2}}{\sin(\Phi_s)} + \frac{\cos(\beta) \times b_{wmc}}{\sin(\Phi_s)}$$

Equation 4.14

r_{sch}, Dimensionless ratio of the radius of the material top surface to belt width

WWW.CEMANET.ORG has issued this document (1460) on Apr 22, 2017 to Pattaraporn Chitrakool, Sriracha, Thailand.

CEMA Standard Capacity Cross Sectional Area, A_s

Equation 4.15 is used to calculate, A_s, for standard CEMA three equal roll troughing idlers based on the average CEMA center roll length circular surcharge surface and the CEMA standard belt edge. With b_{wmc} calculated from b_w and with b_{we} set to the standard dimensions:

$$A_s = 2 \times BW^2 \times \left[r^2_{sch} \times \left(\frac{\Phi_s}{2} - \frac{\sin(\Phi_s) \times \cos(\Phi_s)}{2} \right) \right] + \left[\frac{b_c}{2} \times b_{wmc} \times \sin(\beta) \right] + b^2_{wmc} \times \frac{\sin(\beta) \times \cos(\beta)}{2}$$

Equation 4.15
A_s, CEMA standard capacity cross sectional area

Tables 4.41 through 4.48 were generated using Equation 4.15.

$$w = b_c + 2 \times b_{wmc} \times \cos(\beta)$$

Equation 4.16
w, Dimensionless ratio for maximum width of bulk material with standard capacity cross sectional area A_s

Where:

A = Standard material cross sectional area based on design criteria [ft^2(m^2)] (Equation 4.12)
A_s = CEMA Standard Cross Sectional Area, bulk material cross sectional area based on three equal roll CEMA troughing idler, the surcharge angle with circular top surface, and standard edge distance [ft^2(m^2)]
BW = Belt width, [in (mm)]
b_c = Dimensionless ratio of the effective upper surface of the belt above the center roll to the belt width, BW
b_d = Dimensionless ratio of maximum depth of material above the belt at the center roll to the belt width, BW
b_{we} = Dimensionless ratio of the standard edge distance to the belt width, BW
b_{wmc} = Dimensionless ratio of the length of material on the wing roll to the belt width, BW
d_m = Dimensionless ratio of depth of the material above the belt at the center roll to the belt width, BW
w = Dimensionless ratio of the widest part of the load to the belt width, BW
β = Idler trough angle, (degrees when used with a trig function, otherwise radians)
Φ_s = Material surcharge angle, (degrees when used with a trig function, otherwise radians)
r_{sch} = Dimensionless ratio of the radius tangent to the surcharge angle at the belt edge to the belt width, BW

$$d_m = b_{wmc} \times \sin(\beta) + \left[\frac{\frac{b_c}{2}}{\sin(\Phi_s)} + \frac{\cos(\beta) \times b_{wmc}}{\sin(\Phi_s)} \right] \times \left(1 - \cos(\Phi_s)\right)$$

Equation 4.17
d_m, Dimensionless ratio to belt width for maximum bulk material depth on a belt with CEMA standard capacity cross sectional area, A_s

WWW.CEMANET.ORG has a non-transferable license to [illegible] on 12-Apr-2017 by [illegible] School, Stavanger, Norway

Example: CEMA Standard Capacity Cross Sectional Area, A_s

Assume: CEMA standard equal three roll troughing idler and CEMA standard belt edge distance

Given: BW = 48.0 inches, $\beta = 35$ degrees, $\Phi_s = 20$ degrees

$$b_c = \frac{0.371 \times BW\,(in) + 0.25\,(in)}{BW\,(in)} = \frac{0.371 \times 48.0 + 0.25}{48.0} = 0.3762$$

$$b_w = \frac{1 - b_c}{2} = \frac{1 - 0.3762}{2} = 0.3119$$

$$b_{we} = b_{we} = \frac{0.055 \times BW\,(in) + 0.9\,(in)}{BW\,(in)} = \frac{0.055 \times 48.0 + 0.9}{48.0} = 0.07375$$

$$b_{wmc} = b_w - b_{we} = 0.3119 - 0.07375 = 0.2382$$

$$r_{sch} = \frac{\frac{b_c}{2}}{\sin(\Phi_s)} + \frac{\cos(\beta) \times b_{wmc}}{\sin(\Phi_s)} = \frac{\frac{0.3762}{2}}{\sin(20)} + \frac{\cos(35) \times 0.2382}{\sin(20)} = \frac{0.1881}{0.3420} + \frac{0.8192 \times 0.2382}{0.3420} = 1.1206$$

$$A_s = 2 \times BW^2 \times \left[r_{sch}^2 \times \left(\frac{\Phi_s}{2} - \frac{\sin(\Phi_s) \times \cos(\Phi_s)}{2} \right) + \left[\frac{b_c}{2} \times b_{wmc} \times \sin(\beta) \right] + b_{wmc}^2 \times \frac{\sin(\beta) \times \cos(\beta)}{2} \right]$$

$$= \frac{2 \times 48.0^2}{144 \frac{in^2}{ft^2}} \times \left[1.1206^2 \times \left(\frac{0.3491}{2} - \frac{0.3420 \times 0.9397}{2} \right) + \left[\frac{0.3762}{2} \times 0.2382 \times 0.5736 \right] + 0.2382^2 \times \frac{.5736 \times 0.8192}{2} \right]$$

$$= 32 \times \left[1.2557 \times (0.1746 - 0.1607) + [0.1881 \times 0.1366] + .05674 \times 0.2349 \right]$$

$$= 32 \times [0.01733 + [.02569] + .01333] = 1.8\ ft^2\ (0.168\ m^2)$$

$$d_m = b_{wmc} \times \sin(\beta) + \left[\frac{\frac{b_c}{2}}{\sin(\Phi_s)} + \frac{\cos(\beta) \times b_{wmc}}{\sin(\Phi_s)} \right] \times (1 - \cos(\Phi_s))$$

$$= 0.2382 \times \sin(35) + \left[\frac{\frac{0.3762}{2}}{\sin(20)} + \frac{\cos(35) \times 0.2382}{\sin(20)} \right] \times (1 - 0.9397) =$$

$$= 0.1366 + [1.1206 \times 0.0603] = 0.2093$$

$$D_m = d_m \times BW = 0.2093 \times 48.0 = 10.0\ in\ (254\ mm)$$

$$w = b_c + 2\ x\ b_{wmc} \times \cos(\beta) = 0.3762 + 2\ x\ 0.2382 \times 0.8192 = 0.7665$$

$$W = w \times BW = 0.7665 \times 48.0 = 36.8\ in\ (934mm)$$

Figure 4.18
Example calculations for CEMA standard cross sectional profile and area

WWW.CEMANET.ORG has licensed this document (1460) on Apr 04, 2017 (Patarapol Tritrakool, Suanluang, , , Thailand

Non-Standard Edge Distance

Typically the belt edge distance will be other than the standard CEMA belt edge. For example, for very narrow or very wide belts the standard CEMA belt edge may not be appropriate. Another non-standard application is when there are multiple load points on a belt arranged in series with increasing skirtboard widths, Ws. The unloaded edge distance, bwe × BW, results when a particular cross section A is known from Q, V and the bulk density and the center roll length is known. a', b', and c' are calculation variables.

$$b_{we} = b_w - b_{wmc}$$

Equation 4.19

b_{we}, Unloaded belt edge distance dimensionless ratio

$$b_{wmc} = \frac{-b' + \sqrt{(b')^2 - 4 \times a' \times c'}}{2 \times a'}$$

Equation 4.20

b_{wmc}, Dimensionless ratio of length of bulk material on belt above wing roller

Where:

$$a' = \frac{\cos(\beta)^2}{\sin(\Phi_s)^2} \times \left(\Phi_s - \sin(\Phi_s) \times \cos(\Phi_s)\right) + \cos(\beta) \times \sin(\beta)$$

$$b' = b_c \times \sin(\beta) + b_c \times \frac{\cos(\beta)}{\sin(\Phi_s)^2} \times \left(\Phi_s - \sin(\Phi_s) \times \cos(\Phi_s)\right)$$

$$c' = -\frac{A}{BW^2} + \frac{1}{4} \times \frac{b_c^2}{\sin(\Phi_s)^2} \times \left(\Phi_s - \sin(\Phi_s) \times \cos(\Phi_s)\right)$$

WWW.CEMANET.ORG has issued this document (4160) on Aug 24, 2017 to [illegible], Standard, Licensed

Example: Non-Standard Edge Distance

Assume: CEMA standard three equal roll troughing idler,

Q = 1800 tph, V = 500 fpm, γ_m = 60 lbf/ft^3

Given: BW = 48.0 inches, β = 35 degrees, Φ_s = 20 degrees

From Figure 4.24: b_c = 0.3762 and b_w = 0.3119

$$A = \frac{Q}{V \times \gamma_m} = \frac{1800\frac{t}{h} \times 2000\frac{lbf}{t}}{500\frac{ft}{min} \times 60\frac{min}{h}\ 60\frac{lbf}{ft^3}} = \frac{3{,}600{,}000\ \frac{lbf}{h}}{1{,}800{,}000\ \frac{lbf}{h-ft^2}} = 2.0\ ft^2$$

$$a' = \frac{\cos(\beta)^2}{\sin(\Phi_s)^2} \times \left(\Phi_s - \sin(\Phi_s) \times \cos(\Phi_s)\right) + \cos(\beta) \times \sin(\beta)$$

$$= \frac{(0.8192)^2}{(0.3420)^2} \times \left((0.3491 - 0.3420) \times 0.9397\right) + 0.8192 \times 0.5736$$

$$= 5.7359 \times 0.02774 + 0.4699 = 0.6290$$

$$b' = b_c \times \sin(\beta) + b_c \times \frac{\cos(\beta)}{\sin(\Phi_s)^2} \times \left(\Phi_s - \sin(\Phi_s) \times \cos(\Phi_s)\right)$$

$$= 0.3762 \times 0.5736 + 0.3762 \times \frac{0.8192}{(0.3420)^2} \times (0.3491 - .3420 \times 0.9397)$$

$$= 0.2158 + 2.6349 \times 0.02774 = 0.2889$$

$$c' = -\frac{A}{BW^2} + \frac{1}{4} \times \frac{b_c^2}{\sin(\Phi_s)^2} \times \left(\Phi_s - \sin(\Phi_s) \times \cos(\Phi_s)\right)$$

$$= -\frac{2.0 \times 144\frac{in^2}{ft^2}}{(48.0)^2} + 0.25 \times \frac{0.3762^2}{0.3420^2} \times 0.02774$$

$$= -0.125 + 0.3024 \times 0.02774 = -0.1166$$

$$b_{wmc} = \frac{-b' + \sqrt{(b')^2 - 4 \times a' \times c'}}{2 \times a'} = \frac{-0.2889 + \sqrt{(0.2889)^2 - 4 \times 0.6290 \times (-0.1166)}}{2 \times 0.6290}$$

$$= \frac{-0.2889 + \sqrt{0.3769}}{1.2580} = 0.2583$$

$$b_{we} = b_w - b_{wmc} = 0.3119 - 0.2583 = 0.05360$$

$$B_{we} = b_{we} \times BW = 0.05340 \times 48.0\ in = 2.6\ in\ (65\ mm)$$

WWW.CEMANET.ORG has a licensed document (1160-4) on 2013, 201 to Rattaraporn Sritrakool, Samluang, , , Thailand

Figure 4.21
Example of calculating non standard belt edge distance from known idler, belt width and cross sectional area, A

Height of Bulk Material between Skirtboards, D_s and D_{ms}

The height of the bulk material constrained by the skirtboards is analyzed by assuming the cross sectional area, A, is the same as the cross sectional area contained between the skirtboards, with a circular segment top section defined by the surcharge angle, Φ_s and center roll effective width. The standard CEMA skirtboard width between the skirtboards, W_s, is 2/3 of the belt width. The height of material in contact with the skirtboards, D_{ms}, is an important input for calculating one component of the change in tension due to the skirted length.

Belt Width, BW (in)	18	24	30	36	42	48	54	60	72	84	96	108	120
Standard Skirtboard Width, W_s (in)	12	16	20	24	28	32	36	40	48	56	64	72	80
*Belt Width, BW (mm)	500	600	800	1000	N/A	1200	1400	1600	1800	2000	2400	2800	3000
*Standard Skirtboard Width,W_s (mm)	335	400	533	667	N/A	800	938	1066	1200	1333	1600	1865	2000
* Imperial and metric belt widths and standard skirtboard distances do not correspond exactly													

Table 4.22
CEMA standard skirtboard widths

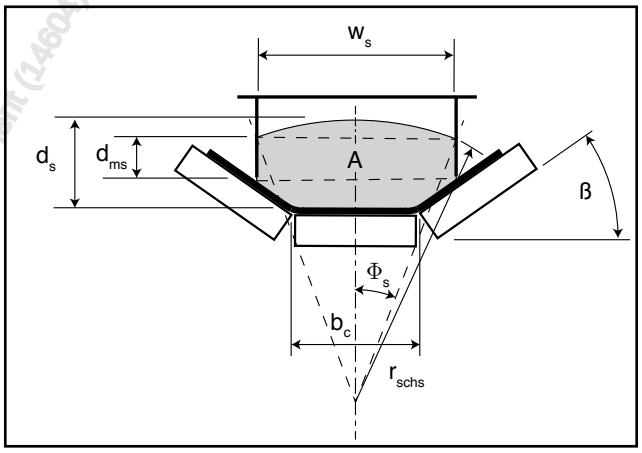

Figure 4.23
Skirted profile cross sectional area, A and dimensionless ratio nomenclature

Note:

Use A_s for A from Equation 4.15 if being used for standard cross section calculations.

$$W_s = w_s \times BW$$

Equation 4.24
W_s, skirtboard width

WWW.CEMANET.ORG has issued this document (14604) on April 27, 2017 to Pontus Jörn Strakosch, Sudbury, Ontario, Canada

It is necessary to verify that the skirtboard width, W_s, is greater than the standard center roll effective width, $b_c \times BW$.

$$\text{If } w_s > b_c \text{ recalculate } A_s \text{ (Equation 4.26) using: } b_{wmc} = \frac{b_s - b_c}{2 \times \cos(\beta)}$$

Equation 4.25
Standard skirtboard width vs. center roll effective width check

$$d_{ms} = \frac{\frac{A}{BW^2} - \left[\frac{1}{4} \times b_s^2 \times \left(\frac{\Phi_s}{\sin(\Phi_s)^2} - \cot(\Phi_s)\right) - \frac{\sin(\beta)}{4} \times \frac{\left(b_c^2 - b_s^2\right)}{\cos(\beta)}\right]}{b_s}$$

Equation 4.26
d_{ms}, Dimensionless ratio for calculating height of bulk material rubbing on skirtboards

$$D_{ms} = d_{ms} \times BW$$

Equation 4.27
D_{ms}, Height of bulk material rubbing on the skirtboards

$$d_s = \frac{b_s - b_c}{2} \times \tan(\beta) + b_{ms} + \frac{b_s}{2} \times \left(\frac{1}{\sin(\Phi_s)} - \frac{1}{\tan(\Phi_s)}\right)$$

Equation 4.28
d_s, Dimensionless ratio for calculating maximum depth of material in the skirted profile

WWW.CEMANET.ORG has issued this document (14604) on Apr 21, 2017 to Patrapon Sirakool, Chuanhuang, , Thailand

Example: Height of Bulk Material between Skirtboards, D_s and D_{ms}

Given: BW = 48.0 inches, $\beta = 35$ degrees, $\Phi_s = 20$ degrees

From Figure 4.25 $b_c = 0.3762$ $b_s = 0.6667$ $A_s = 1.8$ ft^2

Calculate the height of material rubbing on the skirtboards:

$$d_{ms} = \frac{\frac{A_s}{BW^2} - \left[\frac{1}{4} \times b_s^2 \times \left(\frac{\Phi_s}{\sin(\Phi_s)^2} - \cot(\Phi_s)\right) - \frac{\sin(\beta)}{4} \times \frac{\left(b_c^2 - b_s^2\right)}{\cos(\beta)}\right]}{b_s}$$

$$= \frac{\frac{1.8 \times 144 \frac{in^2}{ft^2}}{(48.0)^2} - \left[\frac{1}{4} \times 0.4445 \times \left(\frac{0.3491}{(0.3420)^2} - (2.7475)\right) - \frac{0.5736}{4} \times \frac{\left((0.3762)^2 - (0.6667)^2\right)}{0.8192}\right]}{0.6667}$$

$$= \frac{0.1125 - [0.1111 \times (.2272) - (0.1434 \times -0.3699]}{0.6667} = \frac{(0.1125 - 0.07828)}{0.6667} = 0.05133$$

$D_{ms} = d_{ms} \times BW = 0.05133 \times 48.0 = 2.5$ in (62.5 mm)

Calculate the maximum depth of material between the skirtboards:

$$d_s = \frac{b_s - b_c}{2} \times \tan(\beta) + b_{ms} + \frac{b_s}{2} \times \left(\frac{1}{\sin(\Phi_s)} - \frac{1}{\tan(\Phi_s)}\right)$$

$$= \frac{0.6667 - 0.3762}{2} \times 0.7002 + 0.05133 + \frac{0.6667}{2} \times \left(\frac{1}{0.3420} - \frac{1}{0.3640}\right)$$

$$= 0.1017 + 0.05133 + 0.05890 = 0.2119$$

$D_s = d_s \times BW = 0.2119 \times 48.0 = 10.2$ in (232 mm)

Figure 4.29
Example calculation of height of bulk material on skirtboards and depth of material between skirtboards

The width, height and length of the skirtboards is defined by equations in this manual, but designers often make experience based choices to modify the recommended measurements. The width of the skirtboards is sometimes modified to accommodate a particular edge sealing design, installation of accessories such as, samplers or dust collection, or anticipated mistracking. Multiple loading points on a belt require either skirting the multiple load points as one continuous skirtboard, or making successive skirtboards wider in the direction of belt travel. The lump size discussion in this chapter governs the belt width and therefore the width between the skirtboards. Because the skirtboards are most often covered, the height of the skirtboard should be generous enough to handle the lump sizes, and to allow for the material volume in the turbulent loading area having a loose bulk density. The height and length of the skirtboard is often further modified to reduce air speed and increase air-flow dwell time in the transfer point, in an effort to aid in controlling dust exiting the skirtboarded area.

www.CEMA-STS.com is issued this document (14004) on Apr 2, 2017 to Pattarapol Sritrakool, Suanluang , Thailand

100% Full, Edge To Edge, Cross Sectional Area, A_f

Occasionally the conveyor will be loaded completely full edge to edge or 100% full. The structure supporting the conveyor system should be designed for the dead loads plus the live material load as if the belt were 100% full, rather than the design capacity assuming the material is loaded to the standard edge distance. For clarity and consistency new variables b_f , d_f and r_{schf} are introduced for calculations for a 100% full belt. For a 100% full belt, $b_{we} = 0.0$ so, $b_{wmc} = b_w$ and b_w is used to calculate A_f and d_f. The values for a 100% full belt could be obtained from the equations for A_s with b_{we} set to zero.

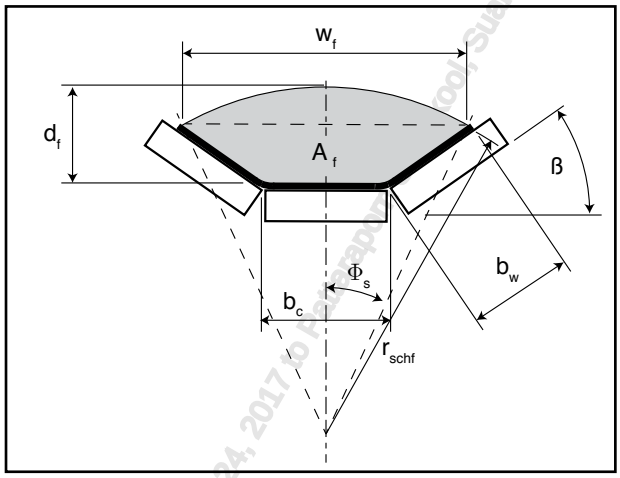

Figure 4.30
A_f, Cross sectional area dimensionless nomenclature for 100% full, edge to edge, belt loading

$$r_{schf} = \frac{\left(1-\cos(\beta)\right) \times b_c + \cos(\beta)}{2 \times \sin(\Phi_s)}$$

Equation 4.31
r_{schf}, Dimensionless ratio of radius of top of bulk material profile for 100% full, edge to edge, belt loading

$$A_f = 2 \times BW^2 \times \left[r_{schf}^2 \times \left(\frac{\Phi_s}{2} - \frac{\sin(\Phi_s) \times \cos(\Phi_s)}{2}\right) + \left[\frac{b_c}{2} \times b_w \times \sin(\beta)\right] + b_w \times \frac{\sin(\beta) \times \cos(\beta)}{2}\right]$$

Equation 4.32
A_f, Cross sectional area of 100 % full, edge to edge, belt loading

$$d_f = b_w \times \sin(\beta) + \left(\frac{b_c}{2} + b_w \times \cos(\beta)\right) \times \left(\frac{1}{\sin(\Phi_s)} - \frac{1}{\tan(\Phi_s)}\right)$$

Equation 4.33
d_f, Dimensionless ratio for maximum depth of bulk material on 100% full, edge to edge, belt loading

WWW.CEMAT.ORG has issued this document (11604) on Apr 24, 2017 to Pittsburgh Technology Solutions, LLC. Single-user license only, copying and networking prohibited.

$$D_f = d_f \times BW$$

Equation 4.34
D_f, Maximum depth of bulk material on 100% full, edge to edge, belt loading

$$w_f = b_c + 2 \times b_w \times \cos(\beta)$$

Equation 4.35
b_f, Dimensionless ratio of width of bulk material on 100% full belt

$$W_f = w_f \times BW$$

Equation 4.36
W_f, Width of bulk material on 100% full belt

Where:

A_f = Cross sectional area of the bulk material on a 100% belt full
β = Trough angle of three equal roll troughing idler
b_c = Dimensionless ratio of width of belt on center roll of three equal roll troughing idler
CEMA standard = 0.371 x BW + 0.25 (in) or, 0.371 x BW + 6.4 (mm)
b_w = Dimensionless ratio of width of belt on wing roll of three equal roll troughing idler
d_f = Dimensionless ratio for maximum depth of material on a 100% full belt using surcharge angle, Φ_s
D_f = Maximum depth of bulk material on a 100% full belt
Φ_s = Surchage angle (degrees when used with trig function, radians otherwise)
r_{schf} = Dimensionless ratio for radius of surface defined by Φ_s for three equal roll troughing idler for Belt Width, BW
W_f = Distance from belt edge to edge of three equal roll troughing idler for Belt Width, BW

Notes:
The cross sectional area, A_f, times the bulk density, times a unit length, (i.e. 1.0 ft or 1.0 m), will give the weight of the bulk material on a 100% full belt, edge to edge, per unit length.

To represent the maximum loading for a specific application, A_f may be calculated using the bulk material's angle of repose, $_r$, and then using a density greater than the conveyed bulk density, γ_m, to calculate the maximum possible weight of the bulk material per unit length. See CEMA Standard 550, Classification and Definitions of Bulk Materials, for definitions of bulk density.

WWW.CEMANET.ORG | Issued to this document (2154) on 22-Apr-2017 to Pattaraporn Sirikool, Sriracha, Thailand

Example: 100% Full, Edge to Edge, Belt Cross Sectional Area, A_f

Given: BW = 48.0 inches, β=35 degrees, Φ_s= 20 degrees

From Figure 4.28 $b_c = 0.3762$ $b_w = 0.3119$

$$r_{schf} = \frac{(1-\cos(\beta)) \times b_c + \cos(\beta)}{2 \times \sin(\Phi_s)}$$

$$= \frac{(1 - 0.8192) \times 0.3762 + 0.8192}{2 \times 0.3420} = \frac{0.06802 + 0.8192}{0.6840} = 1.2971$$

$$A_f = 2 \times BW^2 \times \left[r_{schf}^2 \times \left(\frac{\Phi_s}{2} - \frac{\sin(\Phi_s) \times \cos(\Phi_s)}{2} \right) + \left[\frac{b_c}{2} \times b_w \times \sin(\beta) \right] + b_{ww}^2 \times \frac{\sin(\beta) \times \cos(\beta)}{2} \right]$$

$$= \frac{4608}{144 \frac{in^2}{ft^2}} \times \left[1.6825 \times \left(\frac{0.3491}{2} - \frac{0.3420 \times 0.9397}{2} \right) + [0.1881 \times 0.3119 \times 0.5736] + 0.09728 \times 0.2349 \right]$$

$$= 32.0 \times [1.6825 \times 0.01391 + 0.03365 + 0.02285] = 32 \times 0.07990 = 2.6 \text{ ft}^2 \ (0.24 \text{ m}^2)$$

$$d_f = b_w \times \sin(\beta) + \left(\frac{b_c}{2} + b_w \times \cos(\beta) \right) \times \left(\frac{1}{\sin(\Phi_s)} - \frac{1}{\tan(\Phi_s)} \right)$$

$$= 0.3119 \times 0.5736 + \left(\frac{0.3762}{2} + 0.3119 \times 0.8192 \right) \times \left(\frac{1}{0.3420} - \frac{1}{0.3640} \right)$$

$$= 0.1789 + 0.4436 \times 0.1767 = 0.2573$$

$D_f = d_f \times BW = 0.2573 \times 48.0 = 12.4$ in (314 mm)

Figure 4.37
Example calculations for 100% full, edge to edge, belt loading

WWW.CEMANET.ORG has issued this document (1-604) on Apr 20 2017 to Pattaporn Sritrakool, Suanluang, , , Thailand

BELT CONVEYOR CAPACITIES

Volumetric capacity is the product of cross sectional area and belt speed. Bulk density converts this to the common mass or weight flow rate convention, Q. Conveyor design is usually done around the required flow rate so that it is less than the conveyors capacity.'

To reduce common problems and improve reliability, conveyors are typically not designed to be loaded to their maximum capacity. There are numerous factors to consider, including the properties of the bulk material, the conveyor engineer's experience in selecting an appropriate belt speed, and the sizing of other components, which may affect the overall performance and cost of a system.

Since loading too close to the belt edge is problematic, CEMA has designated standard edge distances for use in CEMA standard capacity calculations. CEMA standard capacities may be further reduced by suggested capacity design factors, DF, ranging from 1.00 to 1.25 (100% to 80% of CEMA standard load cross section). For a given speed and bulk material, belt conveyor capacities increase as the belt width increases. Also, the capacity of a belt conveyor depends on the bulk material surcharge angle, the troughing angle of the idlers and the bulk density.

CEMA Recommendation:

- For required capacity, select the belt width and speed based on a derated cross sectional area by applying a design factor, DF, to the CEMA standard cross sectional area. Based on the material conveyed, the performance requirements and the experience of the conveyor designer, different design factors may be used.
- Design conventional loading chute cross sections based on the loose material profile which is defined by the angle of repose, rather than the angle of surcharge, and the unconfined bulk density rather than the bulk density. This reduces the possibility of choking the flow as the material loads on the belt and begins to settle into a profile determined by the surcharge angle and bulk density.
- Use the weight of a 100% full, edge to edge, belt for material load calculations when designing the conveyor structural supports.
- Consult CEMA Standard 550, Classification and Definitions of Bulk Materials, for the suggested angle of incline/decline.

WWW.CEMANET.ORG has issued this document (Rev. 4) on Apr 14, 2017 to Patarapon Sukpornsuwan, Thailand

General Applications: Capacity Derating

In many applications loading is not uniform and even if running at 100% of CEMA standard capacity surges can result in chute pluggage, spillage and make it harder to control dust. When transferring from one conveyor to a common cause of transfer point spillage and plugging is the time it takes for the discharged load to settle down and reach the receiving belt speed and direction. It is common practice, in most applications, to derate the capacity of conveyors by using a capacity design factor, DF, of 1.18 (85% of CEMA standard capacity) to accommodate surge loading and to reduce dust, spillage, chute plugging and bulk material degradation.

Coal Fired Power Generating Plant: Capacity Derating

Lower belt speeds and derated capacities are often used for handling coal in coal fired power generating plants and handling other bulk materials subject to degradation and the hazards associated with spillage, leakage and dust generation. It is common practice not to load conveyors handling these bulk materials to their capacity in order to reduce degradation, accommodate surge loads and to reduce spillage and leakage due to mistracking. A capacity design factor, DF, of 1.25 (80% of CEMA standard cross sectional area) is often used in handling coal in coal and other dusty or degradable bulk materials.

Example: Capacity Derating

Required capacity: Q = 2400 tph Bulk Material Properties: $\gamma_m = 90\,\frac{lbf}{ft^3}$ $\Phi_s = 20\,deg$

Initial design choices: BW = 48 in β = 35 deg V = 600 $\frac{ft}{min}$ Angle of incline, θ = 0 deg

Calculate conveyed cross sectional area, A (Ref. Equation 4.5)

$$A = \frac{Q}{V \times \gamma_m} = \frac{2400\,\frac{t}{h} \times \frac{1\,h}{60\,min} \times 2000\,\frac{lbf}{t}}{600\,\frac{ft}{min} \times 90\,\frac{lbf}{ft^3}} = \frac{80{,}000\,\frac{lbf}{min}}{54{,}000\,\frac{lbf}{min - ft^2}} = 1.48\ ft^2$$

Derate loading of cross section to 85%, DF = 1.18

Minimum A_s = A × DF = 1.48 ft^2 × 1.18 = 1.75 ft^2 (0.16 m^2)

From Table 4.44 at β = 35 and Φ_s = 20 deg: 48-inch belt, A_s = 1.804 ft^2 (0.168 m^2)

The initial design choice (BW = 48 in and V = 600 fpm) appears appropriate from a capacity standpoint

Figure 4.38
Capacity derating example

www.CEMANET.org Licensed to [illegible] (1-3-04) on Apr 21 2017 to [illegible] School, Suanluang, Thailand

BELT CONVEYOR CEMA STANDARD AREA AND CAPACITY TABLES

Troughed and flat belt conveyor capacities are given in Tables 4.41 through 4.48. These tables are set up for flat belts and three equal roll troughing idlers at 20 degrees, 35 degrees, and 45 degrees for various degrees of surcharge angles which correspond to the slumping characteristics of the materials to be conveyed; and for belt speeds of 100 fpm (0.51 m/s) for belt widths in inches and 0.5 m/s (98.4 fpm) for metric belt widths. To make the best use of these tables, the following eight steps should be taken:

1. Refer to Tables 3.3 and 3.5 or CEMA Standard 550 to determine the surcharge angle of the material. The surcharge angle, on the average, will be 5 degrees to 15 degrees less than the angle of repose.
2. Refer to Table 3.5 or CEMA Standard 550, or test the material to determine the bulk density of the material. [lbf/ft^3, (kgf/m^3)].
3. Choose the idler shape suited to the material and to the conveying problem. Refer to Chapter 5.
4. Refer to Table 4.3, "Recommended maximum belt speeds." Select a suitable conveyor belt speed.
5. Convert the desired tonnage per hour, tph or mtph, to be conveyed, to the equivalent in design volume per hour, ft^3/h or m^3/h by applying a Design Factor, DF, to conservatively design the conveyor. The Design Factor is defined as the reciprocal of the % loading. For example: At 80% loading a DF = 1.25, is suggested for coal fired power plants.

$$Q_{DF} = \frac{Q \times 2000}{\gamma_m} \times DF \ \left(ft^3/h\right) \text{ or } Q_{DF} = \frac{Q \times 1000}{\gamma_m} \times DF \ \left(m^3/h\right)$$

Equation 4.39
Design capacity times capacity design factor

6. Convert the desired capacity in cubic feet per hour to the equivalent capacity at a belt speed of 100 fpm (0.51 m/s) or 0.5 m/s (98.4 fpm).

$$Q_{100} = Q_{DF} \times \frac{100 \text{ (fpm)}}{\text{actual belt speed (fpm)}} \ (ft^3/h) \qquad Q_{0.5} = Q_{DF} \times \frac{0.5 \text{ (m/s)}}{\text{actual belt speed (m/s)}} \ (m^3/h)$$

Equation 4.40
Equivalent capacity at 100 fpm and 0.5 m/s

Where:

Q = Loading capacity [tph (mtph)]
Q_{DF} = Design volumetric loading capacity, Q, times design factor,DF [ft^3/h (m^3/h)]
Q_{100} = Equivalent volumetric capacity at 100 fpm (ft^3/h)
$Q_{0.5}$ = Equivalent volumetric capacity at 0.5m/s (m^3/h)
γ_m = Bulk density [lbf/ft^3 (kgf/m^3)]

WWW.CEMANET.ORG licensed for personal use (1450) on Apr 27 2017 to Pattarapong Suwitrakool, Suwit Co., Ltd., Thailand

7. Using the equivalent capacity so found, refer to Tables 4.41 through 4.48 and find the appropriate belt width.

8. If the material is lumpy, check the selected belt width against the curves in Figure 4.2. The lump size may determine the belt width, in which case the selected belt speed may require revision.

Tables 4.41 through 4.48 are based on CEMA 100% standard capacity:

- CEMA single roll (flat belt) and three equal roll troughing idlers
- Trough angles of 0° (flat belt), 20°, 35° and 45°
- CEMA standard belt edge distance
- Conveyor slope, $\Theta = 0°$

Belt Width BW (in)	A_s Cross Sectional Area [ft², (m²)] Φ_s Surcharge Angle (deg)							Q_{100} Capacity @ 100 fpm (0.51 m/s) [ft³/h, (m³/h)] Φ_s Surcharge Angle (deg)						
	0	5	10	15	20	25	30	0	5	10	15	20	25	30
18	NA	0.020 (0.002)	0.041 (0.004)	0.062 (0.006)	0.083 (0.008)	0.105 (0.010)	0.127 (0.012)	N/A	123 (3.5)	246 (7.0)	371 (10.5)	498 (14.1)	629 (17.8)	763 (21.6)
24	NA	0.039 (0.004)	0.078 (0.007)	0.117 (0.011)	0.157 (0.015)	0.198 (0.018)	0.241 (0.022)	NA	232 (6.6)	466 (13.2)	702 (19.9)	943 (26.7)	1,190 (33.7)	1,444 (40.9)
30	NA	0.063 (0.006)	0.126 (0.012)	0.190 (0.018)	0.255 (0.024)	0.321 (0.030)	0.390 (0.036)	NA	376 (10.6)	755 (21.4)	1,138 (32.2)	1,528 (43.3)	1,928 (54.6)	2,340 (66.3)
36	NA	0.092 (0.009)	0.185 (0.017)	0.280 (0.026)	0.376 (0.035)	0.474 (0.044)	0.575 (0.053)	NA	555 (15.7)	1,113 (31.5)	1,678 (47.5)	2,253 (63.8)	2,843 (80.5)	3,452 (97.8)
42	NA	0.128 (0.012)	0.257 (0.024)	0.387 (0.036)	0.520 (0.048)	0.656 (0.061)	0.796 (0.074)	NA	768 (21.7)	1,541 (43.6)	2,323 (65.8)	3,119 (88.3)	3,936 (111.5)	4,778 (135.3)
48	NA	0.169 (0.016)	0.340 (0.032)	0.512 (0.048)	0.688 (0.064)	0.868 (0.081)	1.053 (0.098)	NA	1,016 (28.8)	2,038 (57.7)	3,072 (87.0)	4,126 (116.8)	5,206 (147.4)	6,320 (179.0)
54	NA	0.216 (0.020)	0.434 (0.040)	0.654 (0.061)	0.879 (0.082)	1.109 (0.103)	1.346 (0.125)	NA	1,298 (36.8)	2,604 (73.7)	3,927 (111.2)	5,273 (149.3)	6,654 (188.4)	8,077 (228.7)
60	NA	0.269 (0.025)	0.540 (0.050)	0.814 (0.076)	1.093 (0.102)	1.380 (0.128)	1.675 (0.156)	NA	1,615 (45.7)	3,240 (91.8)	4,885 (138.3)	6,561 (185.8)	8,278 (234.4)	10,050 (284.6)
72	NA	0.392 (0.036)	0.787 (0.073)	1.186 (0.110)	1.593 (0.148)	2.010 (0.187)	2.440 (0.227)	NA	2,353 (66.6)	4,720 (133.7)	7,117 (201.6)	9,558 (270.7)	12,060 (341.5)	14,640 (414.6)
84	NA	0.538 (0.050)	1.080 (0.100)	1.628 (0.151)	2.186 (0.203)	2.758 (0.256)	3.349 (0.311)	NA	3,229 (91.4)	6,478 (183.5)	9,767 (276.6)	13,117 (371.5)	16,551 (468.7)	20,092 (569.0)
96	NA	0.663 (0.062)	1.330 (0.124)	2.005 (0.186)	2.693 (0.250)	3.397 (0.316)	4.124 (0.383)	NA	3,977 (112.6)	7,979 (226.0)	12,029 (340.7)	16,155 (457.5)	20,384 (577.3)	24,746 (700.8)
108	NA	0.899 (0.084)	1.804 (0.168)	2.721 (0.253)	3.654 (0.339)	4.610 (0.428)	5.596 (0.520)	NA	5,397 (152.8)	10,827 (306.6)	16,323 (462.3)	21,922 (620.8)	27,660 (783.3)	33,578 (950.9)
120	NA	1.115 (0.104)	2.236 (0.208)	3.371 (0.313)	4.528 (0.421)	5.713 (0.531)	6.935 (0.644)	NA	6,688 (189.4)	13,417 (380.0)	20,229 (572.9)	27,167 (769.4)	34,278 (970.8)	41,613 (1178)

Table 4.41
CEMA standard cross sectional and capacity: flat belt, inch belt widths

www.CEMAT.ac.th Property of Thammasat University Rangsit Center, Pathumthani Prakob Sitrakool, Sudaluang, , Thailand

Belt Width BW (in)	A_s Cross Sectional Area [ft², (m²)] Φ_s Surcharge Angle (deg)							Q_{100} Capacity @ 100 fpm (0.51 m/s) [ft³/h, (m³/h)] Φ_s Surcharge Angle (deg)						
	0	5	10	15	20	25	30	0	5	10	15	20	25	30
18	0.090 (0.008)	0.109 (0.010)	0.128 (0.012)	0.148 (0.014)	0.168 (0.016)	0.188 (0.017)	0.209 (0.019)	538 (15.2)	653 (18.5)	769 (21.8)	886 (25.1)	1,006 (28.5)	1,128 (31.9)	1,255 (35.5)
24	0.174 (0.016)	0.210 (0.020)	0.246 (0.023)	0.283 (0.026)	0.321 (0.030)	0.359 (0.033)	0.399 (0.037)	1,041 (29.5)	1,259 (35.7)	1,477 (41.8)	1,699 (48.1)	1,925 (54.5)	2,156 (61.1)	2,394 (67.8)
30	0.285 (0.026)	0.343 (0.032)	0.402 (0.037)	0.462 (0.043)	0.523 (0.049)	0.585 (0.054)	0.650 (0.060)	1,708 (48.4)	2,060 (58.3)	2,414 (68.4)	2,773 (78.5)	3,138 (88.9)	3,512 (99.5)	3,898 (110.4)
36	0.423 (0.039)	0.510 (0.047)	0.597 (0.055)	0.685 (0.064)	0.774 (0.072)	0.866 (0.080)	0.961 (0.089)	2,539 (71.9)	3,058 (86.6)	3,579 (101.4)	4,107 (116.3)	4,645 (131.5)	5,197 (147.2)	5,765 (163.3)
42	0.589 (0.055)	0.708 (0.066)	0.829 (0.077)	0.951 (0.088)	1.075 (0.100)	1.202 (0.122)	1.333 (0.124)	3,533 (100.1)	4,251 (120.4)	4,973 (140.8)	5,703 (161.5)	6,447 (182.6)	7,210 (204.2)	7,997 (226.5)
48	0.782 (0.073)	0.940 0.087)	1.099 (0.102)	1.260 (0.117)	1.424 (0.132)	1.592 (0.148)	1.765 (0.164)	4,691 (132.8)	5,640 (159.7)	6,594 (186.7)	7,560 (214.1)	8,544 (242.0)	9,553 (270.5)	10,593 (300)
54	1.002 (0.093)	1.204 (0.112)	1.407 (0.131)	1.613 (0.150)	1.823 (0.169)	2.037 (0.189)	2.259 (0.210)	6,013 (170.3)	7,225 (204.6)	8,444 (239.1)	9,678 (274.1)	10,935 (309.7)	12,224 (346.2)	13,553 (383.8)
60	1.250 (0.116)	1.501 (0.139)	1.754 (0.163)	2.010 (0.187)	2.270 (0.211)	2.537 (0.236)	2.813 (0.261)	7,499 (212.4)	9,006 (255.0)	10,523 (298.0)	12,058 (341.5)	13,621 (385.7)	15,224 (431.1)	16,877 (478.0)
72	1.827 (0.170)	2.193 (0.204)	2.561 (0.238)	2.933 (0.272)	3.313 (0.308)	3.702 (0.344)	4.103 (0.381)	10,961 (310.4)	13,156 (372.6)	15,364 (435.1)	17,600 (498.4)	19,876 (562.9)	22,210 (629.0)	24,617 (697.2)
84	2.513 (0.233)	3.015 (0.280)	3.520 (0.327)	4.031 (0.374)	4.552 (0.423)	5.085 (0.472)	5.636 (0.524)	15,078 (427.0)	18,089 (512.3)	21,119 (598.1)	24,186 (684.9)	27,310 (773.4)	30,511 (864.1)	33,814 (957.6)
96	3.099 (0.288)	3.717 (0.345)	4.339 (0.403)	4.969 (0.462)	5.610 (0.521)	6.267 (0.582)	6.945 (0.645)	18,596 (526.6)	22,304 (631.6)	26,035 (737.3)	29,811 (844.2)	33,658 (953.2)	37,601 (1065)	41,667 (1180)
108	4.213 (0.391)	5.051 (0.469)	5.895 (0.548)	6.749 (0.627)	7.618 (0.708)	8.510 (0.791)	9.429 (0.876)	25,277 (715.8)	30,307 (858.3)	35,369 (1002)	40,492 (1147)	45,711 (1294)	51,060 (1446)	56,576 (1602)
120	5.226 (0.485)	6.265 (0.582)	7.311 (0.679)	8.369 (0.777)	9.446 (0.878)	10.551 (0.980)	11.690 (1.086)	31,359 (888.1)	37,592 (1065)	43,863 (1242)	50,212 (1422)	56,679 (1605)	63,306 (1793)	70,142 (1986)

Table 4.42
CEMA standard cross sectional and capacity: three equal roll 20° troughing idler, inch belt widths

WWW.CEMANET.ORG has issued this copy to [illegible] on 2/20/2019 for [illegible] only. Bangkok, Thailand

Belt Width BW (in)	A_s Cross Sectional Area [ft², (m²)] Φ_s Surcharge Angle (deg)							Q_{100} Capacity @ 100 fpm (0.51 m/s) [ft³/h, (m³/h)] Φ_s Surcharge Angle (deg)						
	0	5	10	15	20	25	30	0	5	10	15	20	25	30
18	0.144 (0.013)	0.161 (0.015)	0.178 (0.017)	0.195 (0.018)	0.212 (0.020)	0.230 (0.021)	0.249 (0.023)	864 (24.5)	965 (27.3)	1,066 (30.2)	1,169 (33.1)	1,274 (36.1)	1,381 (39.1)	1,492 (42.3)
24	0.278 (0.026)	0.310 (0.029)	0.341 (0.032)	0.374 (0.035)	0.406 (0.038)	0.440 (0.041)	0.475 (0.044)	1,668 (47.2)	1,858 (52.6)	2,049 (58.0)	2,242 (63.5)	2,438 (69.0)	2,640 (74.8)	2,848 (80.7)
30	0.456 (0.042)	0.507 (0.047)	0.558 (0.052)	0.610 (0.057)	0.663 (0.062)	0.717 (0.067)	0.773 (0.072)	2,733 (77.4)	3,039 (86.1)	3,347 (94.8)	3,658 (103.6)	3,976 (112.6)	4,301 (121.8)	4,636 (131.3)
36	0.676 (0.063)	0.751 (0.070)	0.827 (0.077)	0.903 (0.084)	0.981 (0.091)	1.061 (0.099)	1.143 (0.106)	4,059 (115.0)	4,508 (127.7)	4,961 (140.5)	5,419 (153.5)	5,886 (166.7)	6,364 (180.2)	6,858 (194.2)
42	0.941 (0.087)	1.044 (0.097)	1.149 (0.107)	1.254 (0.116)	1.362 (0.127)	1.472 (0.137)	1.585 (0.147)	5,645 (159.9)	6,266 (177.5)	6,892 (195.2)	7,525 (213.1)	8,169 (231.3)	8,830 (250.1)	9,512 (269.4)
48	1.249 (0.116)	1.385 (0.129)	1.523 (0.141)	1.662 (0.154)	1.804 (0.168)	1.950 (0.181)	2.100 (0.195)	7,491 (212.1)	8,312 (235.4)	9,138 (258.8)	9,974 (282.5)	10,826 (306.6)	11,699 (331.3)	12,599 (356.8)
54	1.600 (0.149)	1.774 (0.165)	1.950 (0.181)	2.128 (0.198)	2.309 (0.215)	2.495 (0.232)	2.686 (0.250)	9,599 (271.8)	10,646 (301.5)	11,701 (331.4)	12,768 (361.6)	13,855 (392.4)	14,969 (423.9)	16,119 (456.5)
60	1.994 (0.185)	2.211 (0.205)	2.430 (0.226)	2.651 (0.246)	2.876 (0.267)	3.107 (0.289)	3.345 (0.311)	11,966 (338.9)	13,269 (375.8)	14,580 (412.9)	15,906 (450.5)	17,258 (488.7)	18,643 (528.0)	20,071 (568.4)
72	2.914 (0.271)	3.230 (0.300)	3.548 (0.330)	3.869 (0.359)	4.197 (0.390)	4.533 (0.421)	4.879 (0.453)	17,484 (495.1)	19,379 (548.8)	21,286 (602.8)	23,216 (657.5)	25,182 (713.2)	27,197 (770.2)	29,275 (829.1)
84	4.007 (0.372)	4.440 (0.412)	4.876 (0.453)	5.317 (0.494)	5.766 (0.536)	6.227 (0.578)	6.702 (0.623)	24,043 (680.9)	26,642 (754.5)	29,256 (828.5)	31,902 (903.5)	34,598 (979.8)	37,361 (1058)	40,210 (1139)
96	4.941 (0.459)	5.474 (0.509)	6.011 (0.558)	6.554 (0.609)	7.107 (0.660)	7.673 (0.713)	8.258 (0.767)	29,647 (839.6)	32,846 (930.2)	36,064 (1021)	39,321 (1114)	42,639 (1208)	46,040 (1304)	49,548 (1403)
108	6.715 (0.624)	7.438 (0.691)	8.165 (0.759)	8.901 (0.827)	9.651 (0.897)	10.420 (0.968)	11.212 (1.042)	40,290 (1141)	44,627 (1264)	48,990 (1387)	53,408 (1513)	57,907 (1640)	62,518 (1771)	67,274 (1905)
120	8.329 (0.774)	9.225 (0.857)	10.126 (0.941)	11.038 (1.025)	11.967 (1.112)	12.919 (1.200)	13.901 (1.291)	49,976 (1415)	55,349 (1568)	60,754 (1721)	66,226 (1876)	71,799 (2033)	77,512 (2195)	83,404 (2362)

Table 4.43
CEMA standard cross sectional and capacity: three equal roll 35° troughing idler, inch belt widths

WWW.CEMANET.ORG has issued this document (2020) Chapter 4 for educational purposes only. All rights reserved.

Belt Width BW (in)	A_s Cross Sectional Area [ft², (m²)] Φ_s Surcharge Angle (deg)							Q_{100} Capacity @ 100 fpm (0.51 m/s) [ft³/h (m³/h)] Φ_s Surcharge Angle (deg)						
	0	5	10	15	20	25	30	0	5	10	15	20	25	30
18	0.170 -0.016	0.185 (0.017)	0.200 (0.019)	0.215 (0.020)	0.230 (0.021)	0.246 (0.023)	0.262 (0.024)	1021 (28.9)	1110 (103.1)	1199 (111.4)	1289 (119.7)	1381 (128.3)	1475 (137.0)	1572 (146.0)
24	0.328 (0.030)	0.355 (0.033)	0.383 (0.036)	0.411 (0.038)	0.440 (0.041)	0.469 (0.044)	0.499 (0.046)	1967 (55.7)	2133 (60.4)	2299 (65.1)	2468 (69.9)	2639 (74.7)	2815 (79.7)	2996 (84.8)
30	0.536 (0.050)	0.581 (0.054)	0.625 (0.058)	0.671 (0.062)	0.717 (0.067)	0.764 (0.071)	0.812 (0.075)	3219 (91.2)	3485 (98.7)	3752 (106.3)	4023 (113.9)	4299 (121.7)	4582 (129.8)	4874 (138.0)
36	0.796 (0.074)	0.861 (0.080)	0.926 (0.086)	0.993 (0.092)	1.060 (0.098)	1.129 (0.105)	1.201 (0.112)	4775 (135.2)	5166 (146.3)	5558 (157.4)	5956 (168.7)	6361 (180.1)	6776 (191.9)	7204 (204.0)
42	1.106 (0.103)	1.196 (0.111)	1.286 (0.119)	1.378 (0.128)	1.471 (0.137)	1.566 (0.145)	1.665 (0.155)	6637 (188.0)	7176 (203.2)	7717 (218.5)	8266 (234.1)	8825 (249.9)	9397 (266.1)	9988 (282.9)
48	1.467 (0.136)	1.586 (0.147)	1.705 (0.158)	1.826 (0.170)	1.948 (0.181)	2.074 (0.193)	2.204 (0.205)	8804 (249.3)	9515 (269.5)	10229 (289.7)	10953 (310.2)	11690 (331.1)	12446 (352.5)	13225 (374.5)
54	1.879 (0.175)	2.030 (0.189)	2.182 (0.203)	2.336 (0.217)	2.493 (0.232)	2.654 (0.247)	2.819 (0.262)	11276 (319.3)	12183 (345.0)	13094 (370.8)	14017 (397.0)	14958 (423.6)	15921 (450.9)	16915 (479.0)
60	2.342 (0.218)	2.530 (0.235)	2.719 (0.253)	2.910 (0.270)	3.104 (0.288)	3.304 (0.307)	3.510 (0.326)	14,054 (398.0)	15,180 (429.9)	16,312 (462.0)	17,459 (494.4)	18,627 (527.5)	19,824 (561.4)	21,059 (596.4)
72	3.421 (0.318)	3.693 (0.343)	3.968 (0.369)	4.246 (0.394)	4.529 (0.421)	4.818 (0.448)	5.118 (0.475)	20,525 (581.3)	22,161 (627.6)	23,807 (674.2)	25,474 (721.4)	27,171 (769.5)	28,911 (818.8)	30,705 (869.6)
84	4.703 (0.437)	5.076 (0.472)	5.452 (0.506)	5.833 (0.542)	6.220 (0.578)	6.618 (0.615)	7.028 (0.653)	28,216 (799.1)	30,458 (862.6)	32,714 (926.5)	34,997 (991.1)	37,323 (1057)	39,706 (1124)	42,165 (1194)
96	5.798 (0.539)	6.257 (0.581)	6.720 (0.624)	7.188 (0.668)	7.665 (0.712)	8.154 (0.758)	8.658 (0.804)	34,786 (985.1)	37,545 (1063)	40,320 (1142)	43,130 (1221)	45991 (1302)	48924 (1386)	51950 (1471)
108	7.877 (0.732)	8.500 (0.790)	9.127 (0.848)	9.762 (0.907)	10.408 (0.967)	11.071 (1.028)	11.754 (1.092)	47,263 (1338)	51001 (1444)	54763 (1551)	58570 (1659)	62449 (1769)	66423 (1881)	70523 (1997)
120	9.770 (0.908)	10.541 (0.979)	11.317 (1.051)	12.103 (1.124)	12.904 (1.199)	13.724 (1.275)	14.570 (1.354)	58,617 (1660)	63247 (1791)	67905 (1923)	72620 (2057)	77423 (2193)	82345 (2332)	87422 (2476)

Table 4.44
CEMA standard cross sectional and capacity: three equal roll 45° troughing idler, inch belt widths

WWW.CEMANET.ORG has issued this document (2010) for use by its members only. Any reproduction or distribution is prohibited. Thailand

Belt Width BW (mm)	A_s Cross Sectional Area [m^2, (ft^2)] Φ_s Surcharge Angle (deg)							Q_{100} Capacity @ 0.5 m/s (98.4 fpm) [m^3/h (ft^3/h)] Φ_s Surcharge Angle (deg)						
	0	5	10	15	20	25	30	0	5	10	15	20	25	30
500	N/A	0.003 (0.033)	0.005 (0.054)	0.008 (0.087)	0.01 (0.108)	0.012 (0.13)	0.014 (0.151)	N/A	4.2 (149)	8.4 (297)	12.7 (449)	17 (601)	21.5 (759)	26 (918)
600	N/A	0.004 (0.044)	0.007 (0.076)	0.01 (0.108)	0.014 (0.151)	0.018 (0.194)	0.022 (0.237)	N/A	6.3 (223)	12.6 (445)	18.9 (668)	25.4 (897)	32.1 (1134)	38.9 (1374)
800	N/A	0.007 (0.076)	0.013 (0.14)	0.02 (0.216)	0.026 (0.28)	0.033 (0.356)	0.04 (0.431)	N/A	11.7 (414)	23.4 (827)	35.2 (1243)	47.3 (1670)	59.7 (2108)	72.4 (2556)
1000	N/A	0.01 (0.108)	0.021 (0.227)	0.031 (0.334)	0.042 (0.453)	0.053 (0.571)	0.065 (0.7)	N/A	18.7 (661)	37.5 (1324)	56.6 (1998)	75.9 (2680)	95.8 (3382)	116.3 (4106)
1200	N/A	0.015 (0.162)	0.031 (0.334)	0.046 (0.496)	0.062 (0.668)	0.078 (0.84)	0.095 (1.023)	N/A	27.4 (968)	55 (1942)	82.9 (2927)	111.3 (3929)	140.4 (4957)	170.5 (6019)
1400	N/A	0.021 (0.227)	0.042 (0.453)	0.063 (0.679)	0.085 (0.915)	0.108 (1.163)	0.131 (1.411)	N/A	37.8 (1335)	75.8 (2676)	114.2 (4032)	153.4 (5416)	193.6 (6835)	235 (8296)
1600	N/A	0.028 (0.302)	0.055 (0.593)	0.084 (0.905)	0.112 (1.206)	0.142 (1.529)	0.172 (1.852)	N/A	49.8 (1758)	99.9 (3527)	150.6 (5317)	202.3 (7142)	255.2 (9009)	309.8 (10936)
1800	N/A	0.035 (0.377)	0.071 (0.765)	0.107 (1.152)	0.143 (1.54)	0.181 (1.949)	0.219 (2.358)	N/A	63.5 (2242)	127.4 (4498)	192 (6778)	257.9 (9104)	325.4 (11487)	395 (13944)
2000	N/A	0.044 (0.474)	0.088 (0.948)	0.132 (1.421)	0.178 (1.916)	0.224 (2.412)	0.272 (2.928)	N/A	78.9 (2786)	158.2 (5585)	238.5 (8420)	320.2 (11304)	404 (14262)	490.5 (17315)
2400	N/A	0.064 (0.689)	0.128 (1.378)	0.192 (2.067)	0.258 (2.778)	0.326 (3.51)	0.396 (4.263)	N/A	114.6 (4046)	229.8 (8112)	346.4 (12228)	465.2 (16422)	586.9 (20718)	712.5 (25152)
2800	N/A	0.087 (0.937)	0.175 (1.884)	0.264 (2.842)	0.354 (3.811)	0.447 (4.812)	0.542 (5.835)	N/A	156.9 (5539)	314.7 (11109)	474.4 (16747)	637.1 (22490)	803.8 (28375)	975.8 (34446)
3000	N/A	0.1 (1.077)	0.201 (2.164)	0.303 (3.262)	0.407 (4.381)	0.514 (5.533)	0.624 (6.717)	N/A	180.5 (6372)	362.1 (12783)	545.9 (19271)	733.2 (25882)	925.1 (32657)	1123.1 (39646)

Table 4.45
CEMA standard cross sectional and capacity: flat belt, metric belt widths

WWW.CEMANET.ORG has issued this document (4604) to [illegible] Conveyor Equipment Manufacturers Association, Inc.

Belt Width BW (mm)	A_s Cross Sectional Area [m^2, (ft^2)] Φ_s Surcharge Angle (deg)							Q_{100} Capacity @ 0.5 m/s (98.4 fpm) [m^3/h (ft^3/h)] Φ_s Surcharge Angle (deg)						
	0	5	10	15	20	25	30	0	5	10	15	20	25	30
500	0.01 (0.108)	0.012 (0.13)	0.015 (0.162)	0.017 (0.183)	0.019 (0.205)	0.021 (0.227)	0.024 (0.259)	18.6 (654)	22.5 (793)	26.4 (932)	30.5 (1074)	34.5 (1217)	38.6 (1362)	43 (1515)
600	0.016 (0.173)	0.019 (0.205)	0.022 (0.237)	0.025 (0.27)	0.029 (0.313)	0.032 (0.345)	0.036 (0.388)	28.1 (991)	33.9 (1196)	39.8 (1404)	45.8 (1616)	51.9 (1832)	58.1 (2050)	64.5 (2276)
800	0.029 (0.313)	0.035 (0.377)	0.042 (0.453)	0.048 (0.517)	0.054 (0.582)	0.06 (0.646)	0.067 (0.722)	53.1 (1873)	63.9 (2255)	74.9 (2641)	86 (3034)	97.3 (3433)	108.8 (3840)	120.7 (4260)
1000	0.048 (0.517)	0.057 (0.614)	0.067 (0.722)	0.077 (0.829)	0.087 (0.937)	0.097 (1.045)	0.108 (1.163)	85.9 (3030)	103.3 (3645)	120.9 (4267)	138.6 (4892)	156.7 (5532)	175.3 (6188)	194.4 (6862)
1200	0.07 (0.754)	0.084 (0.905)	0.099 (1.066)	0.113 (1.217)	0.128 (1.378)	0.143 (1.54)	0.159 (1.712)	126.5 (4465)	152.1 (5368)	177.8 (6275)	203.9 (7196)	230.5 (8134)	257.6 (9093)	285.7 (10083)
1400	0.097 (1.045)	0.117 (1.26)	0.136 (1.464)	0.156 (1.68)	0.177 (1.906)	0.198 (2.132)	0.219 (2.358)	175 (6178)	210.3 (7422)	245.7 (8673)	281.6 (9941)	318.2 (11230)	355.7 (12554)	394.3 (13919)
1600	0.129 (1.389)	0.154 (1.658)	0.18 (1.938)	0.207 (2.229)	0.233 (2.509)	0.261 (2.81)	0.289 (3.111)	231.4 (8169)	277.9 (9809)	324.7 (11459)	371.9 (13127)	420.1 (14829)	469.5 (16573)	520.4 (18370)
1800	0.164 (1.766)	0.197 (2.121)	0.23 (2.476)	0.264 (2.842)	0.298 (3.208)	0.333 (3.585)	0.369 (3.972)	295.7 (10438)	354.9 (12526)	414.5 (14631)	474.8 (16758)	536.2 (18926)	599.2 (21149)	664.1 (23442)
2000	0.204 (2.196)	0.245 (2.638)	0.286 (3.079)	0.328 (3.531)	0.37 (3.983)	0.414 (4.457)	0.458 (4.93)	367.8 (12981)	441.3 (15576)	515.3 (18189)	590.1 (20830)	666.4 (23522)	744.5 (26281)	825.1 (29126)
2400	0.297 (3.197)	0.357 (3.843)	0.416 (4.478)	0.477 (5.135)	0.538 (5.792)	0.601 (6.47)	0.666 (7.169)	535.6 (18905)	642.4 (22674)	749.8 (26465)	858.5 (30304)	969.2 (34213)	1082.7 (38219)	1199.9 (42354)
2800	0.408 (4.392)	0.489 (5.264)	0.571 (6.147)	0.654 (7.04)	0.738 (7.944)	0.824 (8.87)	0.913 (9.828)	734.8 (25937)	881 (31096)	1027.6 (36273)	1177.2 (41554)	1328.8 (46905)	1484.3 (52395)	1644.7 (58058)
3000	0.47 (5.06)	0.563 (8.935)	0.658 (9.807)	0.753 (10.689)	0.85 (11.583)	0.949 (12.508)	1.051 (13.455)	846.2 (29870)	1014.8 (35822)	1183.1 (41763)	1355.4 (47843)	1529.6 (53993)	1708.7 (60316)	1892.8 (66813)

Table 4.46
CEMA standard cross sectional and capacity: three equal roll 20° troughing idler, metric belt widths

WWW.CEMANET.ORG has issued this document (3160-4) to [illegible] Thailand

Belt Width BW (mm)	A_s Cross Sectional Area [m^2, (ft^2)] Φ_s Surcharge Angle (deg)							Q_{100} Capacity @ 0.5 m/s (98.4 fpm) [m^3/h (ft^3/h)] Φ_s Surcharge Angle (deg)						
	0	5	10	15	20	25	30	0	5	10	15	20	25	30
500	0.016 (0.173)	0.018 (0.194)	0.02 (0.216)	0.022 (0.237)	0.024 (0.259)	0.026 (0.28)	0.028 (0.302)	29.8 (1050)	33.1 (1168)	36.7 (1293)	40.1 (1415)	43.7 (1540)	47.3 (1668)	51 (1800)
600	0.025 (0.27)	0.028 (0.302)	0.031 (0.334)	0.034 (0.366)	0.036 (0.388)	0.039 (0.42)	0.043 (0.463)	44.9 (1585)	50 (1765)	55.2 (1946)	60.4 (2130)	65.7 (2318)	71.1 (2509)	76.7 (2707)
800	0.047 (0.506)	0.052 (0.56)	0.058 (0.625)	0.063 (0.679)	0.068 (0.732)	0.074 (0.797)	0.08 (0.862)	84.8 (2992)	94.2 (3326)	103.8 (3663)	113.4 (4003)	123.2 (4347)	133.2 (4701)	143.7 (5070)
1000	0.076 (0.819)	0.085 (0.915)	0.093 (1.002)	0.102 (1.098)	0.11 (1.185)	0.119 (1.281)	0.128 (1.378)	137.2 (4840)	152.3 (5375)	167.5 (5910)	182.9 (6456)	198.6 (7008)	214.7 (7578)	231.3 (8162)
1200	0.112 (1.206)	0.124 (1.335)	0.137 (1.475)	0.149 (1.604)	0.162 (1.744)	0.175 (1.884)	0.189 (2.035)	202 (7130)	224.2 (7912)	246.4 (8697)	268.9 (9493)	291.9 (10302)	315.5 (11136)	339.7 (11991)
1400	0.155 (1.669)	0.172 (1.852)	0.189 (2.035)	0.206 (2.218)	0.224 (2.412)	0.242 (2.605)	0.26 (2.799)	279.4 (9861)	309.8 (10934)	340.5 (12018)	371.5 (13113)	403.1 (14228)	435.6 (15375)	468.9 (16553)
1600	0.205 (2.207)	0.227 (2.444)	0.25 (2.691)	0.273 (2.939)	0.296 (3.187)	0.319 (3.434)	0.344 (3.703)	369.2 (13033)	409.4 (14451)	449.8 (15875)	490.6 (17317)	532.2 (18787)	575 (20295)	618.9 (21848)
1800	0.262 (2.821)	0.29 (3.122)	0.319 (3.434)	0.348 (3.746)	0.377 (4.059)	0.408 (4.392)	0.439 (4.726)	471.6 (16646)	522.8 (18453)	574.2 (20267)	626.2 (22105)	679.3 (23977)	733.6 (25895)	789.7 (27876)
2000	0.326 (3.51)	0.361 (3.886)	0.396 (4.263)	0.432 (4.651)	0.469 (5.049)	0.506 (5.447)	0.545 (5.867)	586.5 (20701)	650 (22942)	713.8 (25197)	778.4 (27476)	844.2 (29801)	911.7 (32180)	981.3 (34637)
2400	0.474 (5.103)	0.525 (5.652)	0.577 (6.211)	0.629 (6.771)	0.682 (7.342)	0.736 (7.923)	0.793 (8.536)	853.8 (30138)	945.9 (33390)	1038.4 (36656)	1131.9 (39956)	1227.4 (43326)	1325.8 (46801)	1426.2 (50345)
2800	0.651 (7.008)	0.721 (7.761)	0.791 (8.515)	0.862 (9.279)	0.935 (10.065)	1.009 (10.861)	1.086 (11.69)	1171.3 (41346)	1297.3 (45793)	1424.3 (50275)	1552.2 (54792)	1683.1 (59413)	1817 (64138)	1954.8 (69002)
3000	0.749 (8.063)	0.83 (10.205)	0.911 (10.958)	0.993 (11.722)	1.076 (12.498)	1.162 (13.283)	1.25 (14.112)	1348.5 (47600)	1493.2 (52707)	1639.8 (57884)	1787.5 (63096)	1937.1 (68377)	2091.6 (73832)	2251 (79460)

Table 4.47
CEMA standard cross sectional and capacity: three equal roll 35° troughing idler, metric belt widths

WWW.CEMANET.ORG has issued this document (2460) for your personal use only. Copyright protected. Conveyor Equipment Manufacturers Association

Belt Width BW (mm)	A_s Cross Sectional Area [m^2, (ft^2)] Φ_s Surcharge Angle (deg)							Q_{100} Capacity @ 0.5 m/s (98.4 fpm) [m^3/h (ft^3/h)] Φ_s Surcharge Angle (deg)						
	0	5	10	15	20	25	30	0	5	10	15	20	25	30
500	0.019 (0.205)	0.021 (0.227)	0.023 (0.248)	0.024 (0.259)	0.026 (0.28)	0.028 (0.302)	0.03 (0.323)	35.1 (1240)	38.1 (1345)	41.1 (1451)	44.1 (1557)	47.3 (1670)	50.4 (1780)	53.7 (1896)
600	0.029 (0.313)	0.032 (0.345)	0.034 (0.366)	0.037 (0.399)	0.039 (0.42)	0.042 (0.453)	0.045 (0.485)	53 (1871)	57.4 (2027)	61.9 (2186)	66.4 (2344)	71.1 (2510)	75.8 (2676)	80.7 (2849)
800	0.055 (0.593)	0.06 (0.646)	0.065 (0.7)	0.069 (0.743)	0.074 (0.797)	0.079 (0.851)	0.084 (0.905)	99.8 (3523)	108 (3813)	116.3 (4106)	124.6 (4399)	133.1 (4699)	141.9 (5010)	150.9 (5327)
1000	0.09 (0.969)	0.097 (1.045)	0.104 (1.12)	0.112 (1.206)	0.119 (1.281)	0.127 (1.368)	0.135 (1.454)	161.2 (5691)	174.4 (6157)	187.6 (6623)	200.9 (7092)	214.5 (7572)	228.5 (8067)	242.9 (8575)
1200	0.132 (1.421)	0.142 (1.529)	0.153 (1.647)	0.164 (1.766)	0.175 (1.884)	0.186 (2.003)	0.198 (2.132)	237.3 (8377)	256.5 (9055)	275.8 (9736)	295.3 (10425)	315.2 (11127)	335.6 (11847)	356.6 (12588)
1400	0.182 (1.96)	0.197 (2.121)	0.212 (2.282)	0.227 (2.444)	0.242 (2.605)	0.257 (2.767)	0.273 (2.939)	328.1 (11582)	354.5 (12514)	381 (13450)	407.8 (14396)	435.1 (15360)	463.2 (16351)	492.1 (17372)
1600	0.241 (2.595)	0.26 (2.799)	0.279 (3.004)	0.299 (3.219)	0.319 (3.434)	0.34 (3.66)	0.361 (3.886)	433.5 (15303)	468.2 (16528)	503.1 (17760)	538.4 (19006)	574.4 (20277)	611.3 (21579)	649.3 (22921)
1800	0.308 (3.316)	0.332 (3.574)	0.357 (3.843)	0.382 (4.112)	0.407 (4.381)	0.433 (4.661)	0.46 (4.952)	553.6 (19543)	597.7 (21099)	642.2 (22670)	687.1 (24255)	732.9 (25872)	779.9 (27531)	828.3 (29239)
2000	0.382 (4.112)	0.413 (4.446)	0.443 (4.769)	0.474 (5.103)	0.506 (5.447)	0.538 (5.792)	0.572 (6.158)	688.3 (24297)	743.1 (26232)	798.2 (28177)	853.9 (30143)	910.7 (32148)	969 (34206)	1028.6 (36310)
2400	0.556 (5.985)	0.601 (6.47)	0.645 (6.943)	0.69 (7.428)	0.736 (7.923)	0.783 (8.429)	0.831 (8.945)	1002 (35371)	1080.8 (38153)	1161.5 (41001)	1242.2 (43850)	1323.9 (46734)	1408.5 (49721)	1496.1 (52813)
2800	0.763 (8.213)	0.823 (8.859)	0.884 (9.516)	0.946 (10.183)	1.008 (10.851)	1.072 (11.54)	1.139 (12.261)	1374.1 (48506)	1482.3 (52326)	1591.6 (56184)	1701.8 (60074)	1815 (64070)	1930.2 (68137)	2049.3 (72341)
3000	0.879 (9.462)	0.948 (1.077)	1.018 (2.164)	1.089 (3.262)	1.161 (4.381)	1.234 (5.533)	1.311 (6.717)	1581.7 (55835)	1706.7 (60247)	1832.7 (64695)	1959.7 (69178)	2089.6 (73763)	2222.5 (78455)	2359.3 (83284)

Table 4.48
CEMA standard cross sectional and capacity: three equal roll 45° troughing idler, metric belt widths

WWW.CEMANET.ORG has issued this document (4604) to [illegible] Thailand

WWW.CEMANET.ORG has issued this document (14604) on Apr 24, 2017 to Pattarapom Sritrakool, Suanluang, , , Thailand

This Page Left Intentionally Blank

Introduction Pg 93
Idler Classifications Pg 93
General Types of Belt Conveyor Idlers Pg 93
- Carrying Idlers
- Return Idlers
- Troughing Carrying Idlers
- Impact Idlers
- Belt Training Idlers, Carrying
- Garland Idlers
- Return Idlers
  - Flat Return Idlers
  - Self Cleaning Return Idlers
  - Return Belt Training Idlers
  - Two-Roll "Vee" Return Idlers
- Belt Scale Idlers

Idler Spacing Pg 100
- Return Idler Spacing
- Carrying Idler Spacing at Loading Points
- Troughing Idler Spacing Adjacent to Terminal Pulleys

The Selection of Idlers Pg 101
- Rating and Idler Life
- Idler Selection Procedure
  - Type of Material Handled
  - Lump Size Consideration
  - Idler Load
  - Impact Forces
  - Effect of Load on Predicted Bearing L_{10} Life
  - Belt Speed
  - Roll Diameter
  - Environmental, Maintenance and Other Conditions
  - Special Conditions

WWW.CEMANET.ORG has issued a document #1400 on Apr 24, 2017 to Thanapom Sritrakool, Suanluang, , , Thailand

Preface To Selection Procedure, Figures and Tables Pg 106
Initial Selection Steps 1 and 2
Bearing L_{10} Life Correction Steps 3, 4 and 5
Determine Potential Idler Life Step 6
Step 1: Troughing Idler Class Selection
Step 2: Return Idler Class Selection
Step 3: Effect of Load on Predicted Bearing L_{10} Life
Step 4: Effect of Speed on Predicted Bearing L_{10} Life
Step 5: Effect of Roll Diameter on Predicted Bearing L_{10} Life
Step 6: Environmental, Maintenance and Special Conditions
Rigid Frame Idlers Load Rating, ILR, and Capacity Tables Pg 112
Example Idler Selection Pg 115
Example Step 1: Troughing Idler Class Selection
Example Step 2: Return Idler Class Selection
Example Step 3: Impact Idler Class Selection
Example Step 4: Effect of Load on Predicted Bearing L_{10} Life
Example Step 5: Effect of Belt Speed on Predicted Bearing L_{10} Life
Example Step 6: Effect of Roll Diameter on Predicted Bearing L_{10} Life
Example Step 7: Effect of Environmental, Maintenance, and Temperature on Potential Idler Life
Example Conclusion
Belt Alignment Pg 124
Average Weight of Cema Idler Rotating Parts Tables Pg 125
Average Inertia of Cema Class Idlers Tables Pg 127

WWW.CEMANET.ORG has issued this document (1460 - 30-Apr-2017) to supaporn chaisiri (supaporn.chaisiri@gmail.com), Rayong, , Thailand

INTRODUCTION

Proper support and protection for the belt and proper support for the load being conveyed are important requirements for idlers.

Belt conveyor idlers for bulk materials are designed to incorporate rolls with various diameters. The rolls are fitted with anti friction bearings and seals, and are mounted on shafts.

Frictional resistance of the idler roll influences belt tension and, consequently, the power requirement. Roll diameter, bearing design and seal requirements constitute the major components affecting frictional resistance.

This manual does not discuss the relative merits of the various anti-friction bearings used, or the merits of the seals to protect these bearings from dirt and moisture and to retain the lubricant. Each belt conveyor manufacturer chooses a particular bearing and seal arrangement.

IDLER CLASSIFICATIONS

Selection of the proper roll diameter and size of bearing and shaft is based on the type of service, operating condition, load carried, and belt speed. For ease and accuracy of idler selection, the various idler designs can be grouped into classifications as shown in Table 5.1. Refer to CEMA Standard 502 latest revision for the latest detailed dimensional data and selection procedures. There are no current CEMA idler standards for belts wider than 96 inches. These idlers are built to order based on the application. Contact a CEMA Member idler manufacturer for recommendations.

CEMA Idler Class	Roll Diameter in (mm)	Belt Width Range in (mm)
B4	4 (102)	18 through 48 (457 through 1219)
B5	5 (127)	18 through 48 (457 through 1219)
C4	4 (102)	18 through 60 (457 through 1524)
C5	5 (127)	18 through 60 (427 through 1524)
C6	6 (154)	24 through 60 (610 through 1524)
D5	5 (127)	24 through 72 (610 through 1829)
D6	6 (154)	24 through 72 (610 through 1829)
E6	6 (154)	36 through 96 (914 through 2438)
E7	7 (179)	36 through 96 (914 through 2438)
F6	6 (154)	60 through 96 (1524 through 2438)
F7	7 (179)	60 through 96 (1524 through 2438)
F8	8 (203)	60 through 96 (1524 through 2438)

Table 5.1
CEMA Idler Classification System

GENERAL TYPES OF BELT CONVEYOR IDLERS

There are two basic types of belt conveyor idlers: carrying idlers, which support the loaded run of the conveyor belt and; return idlers, which support the empty return run of the conveyor belt. See Figures 5.2 through 5.4.

www.CEMANET.ORG has issued this document (14604) on 10/7/14; 10/7/14 pages; Singapore, Singapore, Suanluang, Thailand

Carrying Idlers

Carrying idlers are of two general configurations. One is used for troughed belts and usually consists of three rolls. The two outer rolls are inclined upward and the center roll is horizontal. The other configuration is used for supporting flat belts. This idler generally consists of a single horizontal roll positioned between brackets which attach directly to the conveyor frame.

Return Idlers

Return idlers usually are horizontal rolls, positioned between brackets which normally are attached to the underside of the support structure on which the carrying idlers are mounted. Two-roll "Vee" return idlers are also used for better training and higher load ratings.

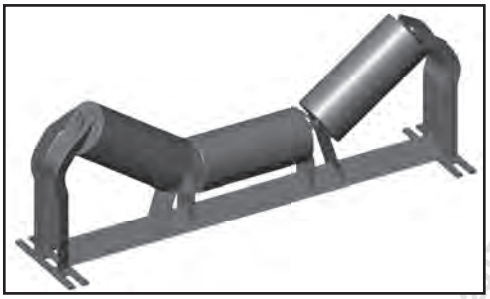

Figure 5.2
Carrying 35° three equal roll troughing idler



Figure 5.3
Carrying flat belt idler

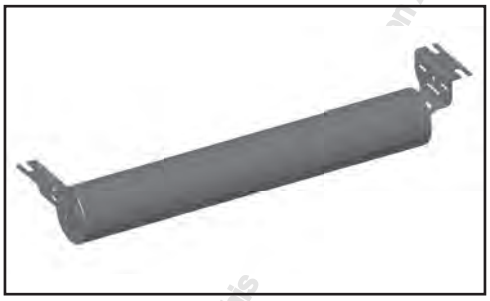

Figure 5.4
Return belt idler

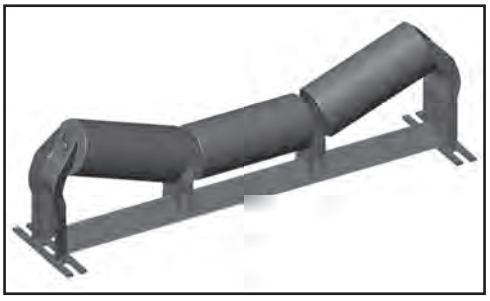

Figure 5.5
Carrying 20° three equal roll troughing idler

Troughing Carrying Idlers

Due to the increased cross sectional fill depth, troughed belts can carry far greater tonnages than flat belts of the same width and speed. Troughing carrying idlers are sometimes referred to as "troughers" or "carriers", and are the most common type of belt conveyor idler used. Rolls are commonly fabricated from steel tube with end discs (bearing housings) welded to the tube ends. Rolls made from high molecular weight polyethylene are used where abrasion, material buildup, or corrosion create short shell life with steel roll idlers.

Historically, 20-degree troughing idlers have longer application histories than either 35-degree or 45-degree troughing idlers. As conveyor belt design technology has advanced, allowing greater transverse flexibility, 35-degree troughing idlers have become the most widely used type of . Troughing idlers are made as either in-line or offset center roll design. Three roll, in-line, equal roll length troughing idlers are most commonly used and offer the best all-around shape to carry a maximum load cross section.

Figure 5.5 shows a 20-degree in-line troughing idler. An offset center roll idler, commonly known as a grain idler, is shown in Figure 5.6. This idler, utilizing the wing or side rolls located in an adjacent parallel plane to the center roll, is used in either the grain industry where thin belts are used or underground mining where height clearance is minimal. A picking and feeder (or picker) idler is shown in Figure 5.7. This design uses a long (extended) center roll and short side rolls inclined at 20 degrees to allow maximum product dispersal for inspection or sorting. Unequal length roll troughing idlers are also available with the side rolls inclined at 35 degrees or 45 degrees.



Figure 5.6
Carrying 35° offset troughing idler

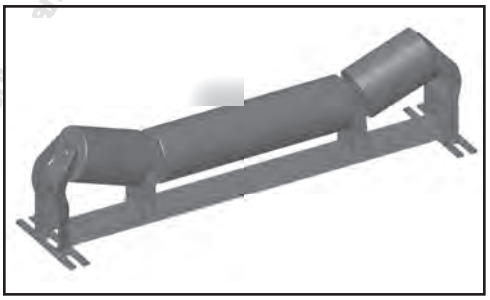

Figure 5.7
Carrying 20° picking idler

Impact Idlers

Impact troughing idlers, sometimes referred to as "cushion idlers," are used at loading points where impact resulting from lump size, material bulk density, and height of material free fall could seriously damage the belt if the belt were rigidly supported.

Many types of impact troughing idler are available using pneumatic tires, semi-pneumatic tires, heavy rubber covers vulcanized to steel rolls, and individual narrow discs pressed onto a steel tube. This latter type, as shown in Figure 5.8, is the most common type of construction. Each disc is made of a resilient material such as a soft (40 to 50 durometer) natural rubber, grooved and relieved to allow the rubber to move under impact. The continuous (massed) row of discs gives better support to the belt than most pneumatic or semi-pneumatic types. The resilient discs help absorb energy from impact loads, which could save the belt from impact damage. The discs are sacrificed in favor of reducing the risk of belt damage. Impact troughing idlers with three equal length rolls have the same load rating as standard troughing idlers for a given CEMA class.



Figure 5.8
Carrying 35° troughing rubber cushion impact idler

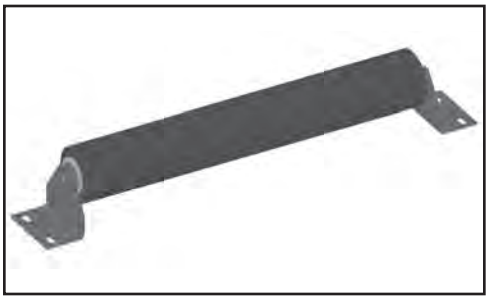

Figure 5.9
Flat belt rubber cushion impact idler with fixed shaft

Flat belt impact rolls as shown in Figure 5.9 have the same load rating as a single roll return for a given CEMA class. Flat belt type impact rolls are also available in a "live shaft" design supported by pillow block style bearings. These are frequently used on heavy-duty belt feeders. They have a much higher load rating

and are not covered by a CEMA standard, but are available from CEMA Members on an application-by-application basis. Even though an impact idler provides for some cushioning under the belt to help soften the force and reduce the possibility of damage, the impacting force has to be dissipated. The magnitude of these impact loads and their dissipation is not covered in CEMA load ratings.

Impact idlers with removable end stands, reinforced frames, and other special features to aid skirtboard and belt sealing systems are available from your CEMA Member idler manufacturer.

Using an impact style troughing idler as a transition idler is not recommended. Although not classified as idlers, there are numerous designs and configurations of fixed impact bars, impact saddles, impact cradles, and impact/slider beds available and described in CEMA Standard 575, latest version. These can solve some specific impact or sealing system application problems, but are not a "cure all". These are available from CEMA Members on an application-by-application basis. Refer to Chapter 11.

Belt Training Idlers, Carrying

Normal carrying idlers are the primary devices that control the belt alignment. No self-alignment idlers are needed under well designed, precisely assembled, and maintained belt conveyors. There are transient conditions, however, that may cause conveyor belts to become misaligned despite all efforts to assure proper installation and maintenance. For this reason, conveyor manufacturers can furnish belt training idlers to help control belt alignment in difficult situations.

The training idlers pivot about an axis vertically perpendicular to the center line of the belt, and when the belt becomes off-center, they swing about so that the axes of the rolls themselves become canted in a corrective direction. This swinging about the center pivot is accomplished in various ways usually associated with the pressure of the off-center belt against a fixed arm attached to the pivoting idler frame. See Figure 5.10.

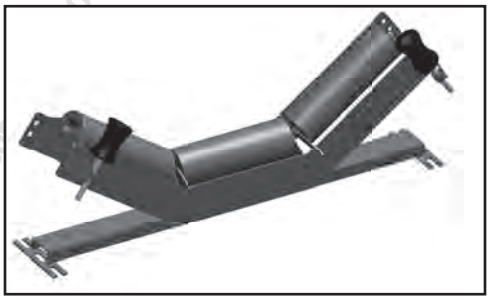

Figure 5.10
Carrying 35° troughed belt training idler

If the belt is to be reversed, the self-aligning idlers must be of a type that will swing about their pivot in a corrective direction regardless of belt direction. Those types that depend on friction of the off-center belt to shift the idler will work in both directions of belt movement. Even with properly designed self aligning idlers, the training of a reversing belt requires very careful alignment of all idlers and pulleys as well as leveling and alignment of the conveyor structure itself. If belt training idlers are required, they should be spaced from 100 to 150 feet (31 to 46 m) apart, and at least one training idler should be used on conveyors less than 100 feet (31 m) long. Belt training idlers should not be used in areas of belt transitions or other areas of high belt tension.

IHS Markit, IPG has issued this document (2024) on behalf of and to Prabodham Sirisa Pvt. Ltd., Bangkok, Thailand.

Fixed guide rolls placed perpendicular to the edge of the conveyor belt are not generally recommended, because continuous contact with the conveyor belt edge accelerates belt edge wear, appreciably reducing belt life. In general, the greater the belt tensions, the less effective the training idlers.

Garland Idlers

Garland idlers, sometimes referred to as Catenary or Suspended idlers, usually consist of a three (3) roll configuration for carrying, two (2) roll configuration for returns or five (5) roll for impact idlers. The flexibility of the Garland idler, in both longitudinal and transverse directions, gives this type of idler the ability to adapt to load conditions. Garland carrying and impact idlers are usually a steel shell construction. Rubber covers or discs can be utilized on a three (3) roll unit to provide additional cushioning but this will reduce the flexibility in centering the belt. Garland idlers usually consist of rolls connected together by chain links and are suspended by means of various devices such as hooks, suspension plate or chains. Quick release suspensions can be furnished that allow the idler to be lowered away from belt contact in the case of roll failure.



Figure 5.11
Garland idler configuration

The suspended design aids in belt alignment and handles large, irregular lumps because of the flexible connections and available vertical move. The five (5) roll designs offer a deep trough configuration and greater load capacities than conventional idlers. The suspension points outside and above the belt line make them readily accessible and build-up is minimized, as there are no frames under the Garland idler. Garland design idlers can be utilized on rigid frame or wire rope supported conveyor systems. Figure 5.12 shows the available types and configuration under off-center loads.

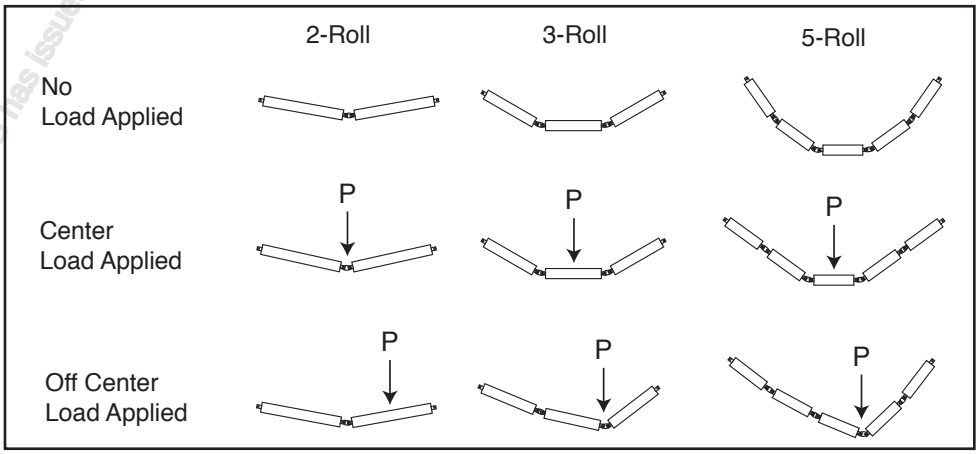

Figure 5.12
Garland idler forms and functions

WWW.CEMANET.ORG has issued this document (1460) on Apr 24 - ... apom Limited, Sukhumvit , Thailand

Return Idlers

These idlers are used to support the return run of the belt. They usually are suspended below the lower flanges of the stringers that support the carrying idlers. It is preferable that return idlers be mounted so that the return run of the belt is visible below the conveyor frame. Figure 5.4 illustrates a typical return idler.

Flat Return Idlers

The flat return idler consists of a long single roll, fitted at each end with a mounting bracket. Idler roll length, bracket design, and mounting-hole spacing should allow for adequate transverse belt movement without permitting the belt edges to contact any stationary part of the conveyor or its frame.

Self-Cleaning Return Idlers

An important consideration with return idler applications is the adherence of materials to the carrying surface of the belt. Such material may be abrasive and wear the shell of the return idler rolls. Or, this buildup may be sticky and adhere to the return idler rolls. A large buildup may cause misalignment of the return run of the belt.

Several styles of return idler rolls are available to overcome these difficulties. When sticky materials are a problem, rubber or urethane disc, or rubber coated helically shaped, self-cleaning return idlers can be used. Disc and helical rolls present very narrow surfaces for adhesion and thus reduce the tendency for material build up. This type of return idler sometimes is erroneously called a "belt-cleaning idler." Even though such idlers do "track off" material adhering to the belt surface on the return run, they do not constitute belt cleaning devices. See Figures 5.13 and 5.14. If additional abrasion resistance is required and sticky material is not the major concern, steel roll idlers with rubber, polyurethane or polyethylene covering will extend the wear life of the roll.

The preferred disc type return idler has massed discs at each end of the roll to provide better belt support, if the belt is running off center of structure. Though most standard return idlers are a few inches wider than the belt width, the rubber-disc return idler width is usually at or near the width of the belt due to disc retaining requirements and to prevent the belt edge from catching between discs.



Figure 5.13
Rubber disc return idler



Figure 5.14
Helical or spiral self-cleaning return idler

On short conveyors, it may be necessary to equip the complete return run with self-cleaning idlers. On long return belt runs, it is necessary to use these idlers only to the point where the material on the belt surface no longer will adhere to and build up on normal return idler rolls. Beyond this point, standard return idlers can be used.

Return Belt Training Idlers

Return belt idlers can be pivotally mounted to train or align the return belt in a manner similar to the training idlers described for the carrying run of the belt. See Figure 5.15. Training idlers for both single direction or reversible belts are available. In general, a training idler designed for use on a one-way belt travel will not work on a reversible belt. Return belt training idlers are usually more effective than trough training idlers, due to lower belt tension on the return run.

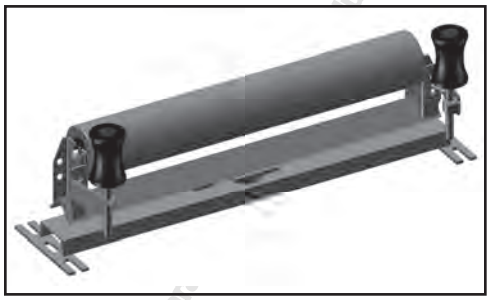

Figure 5.15
Return training Idler

Two-Roll "Vee" Returns

With the increased use of heavy, high-tension fabric and steel cable belts, the need for better support and belt training has resulted in the development of "Vee" return idlers. A basic "Vee" return idler consists of two rolls, each tilted at a 5, 10 or 15 degree angle. These rolls are either of the garland (suspended) or rigid design. See Figures 5.16 and 5.17. The "Vee" return idler has some training effect on the belt, while allowing greater idler spacing because of its increased load ratings. The trough shape of the belt also tends to reduce or eliminate vibration along the conveyor.

"Vee" return idlers can be supplied with steel rolls, rolls coated with some type of polymer, or spaced discs of rubber, urethane or other material. A decrease in wear life of the roll shell or spaced discs may occur with "Vee" return idlers. This is caused by most of the belt weight contacting the roll about one-fourth of the roll length from the center line of the idler.

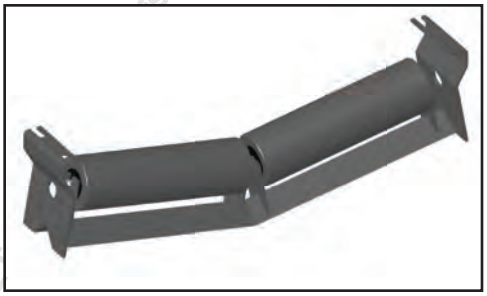

Figure 5.16
Two-roll "Vee" return Idler rigid frame design



Figure 5.17
Two-roll suspended "Vee" return idler

Belt Scale Idlers

Installations that include belt scales require idlers with more stringent tolerances in order to attain proper weighing accuracy. CEMA Standard No. 502, latest version, includes scale idler requirements. When considering the installation and maintenance of a belt scale, the use of like idlers and rolls in the scale area is important. Proper alignment of all components and the control of contaminants is essential. Belt conveyor scales from different manufacturers vary in characteristics, instructions, accuracy and

dimensions. The basic application information and installation requirements relative to idler spacing and position must be obtained from the specific scale manufacturer.

IDLER SPACING

Factors to consider when determining idler spacing are belt weight, material weight, idler load rating, belt sag, idler life, belt rating, belt tension, and radius in vertical curves (see Chapter 9). More complex issues (such as belt flap or vibration stability in wind, and power usage from belt indentation, material tramping, and rolling resistance) will be affected less by idler spacing.

If too much sag of a loaded troughed belt is permitted between the troughing idlers, the material may spill over the edges of the belt. For the best design, especially on long-center troughed belt conveyors, the sag between idlers should be limited as described in Chapter 6. Table 5.18 lists conservative suggested normal troughing idler spacing for use in general engineering practice, when the amount of belt sag is not specifically limited. Final idler selection should be determined based on information obtained through detailed analysis by use of the CEMA idler selection method. These figures on spacing should be used in conjunction with the information on sag selection in Chapter 6. Spacing is normally varied in 6-inch (150 mm) increments.

Some conveyor systems have been designed successfully utilizing extended idler spacing and/or graduated idler spacing. Extended idler spacing is simply greater than normal spacing. This is sometimes applied where belt tension, sag, belting strength, and idler rating permit. Advantages may be lower idler cost (fewer used) and better belt training. Graduated idler spacing is greater than normal spacing at high tension portions of the belt. As the tension along the belt increases, the idler spacing is increased. Usually this type of spacing occurs toward and near the discharge end.

Extended and graduated spacing are not commonly used but if either is employed, care should be taken not to exceed idler load rating and sag limits during starting and stopping. (See Chapter 6.)

Belt Width in (mm)	Troughing Idler Spacing (S_i) Weight of Material Handled lbf/ft³ (kgf/m³)						Return Idlers ft (m)
	30 (480)	50 (800)	75 (1200)	100 (1600)	150 (2400)	200 (3200)	
18 (457)	5.5 (1.7)	5.0 (1.5)	5.0 (1.5)	5.0 (1.5)	4.5 (1.4)	4.5 (1.4)	10.0 (3.0)
24 (610)	5.0 (1.5)	4.5 (1.4)	4.5 (1.4)	4.0 (1.2)	4.0 (1.2)	4.0 (1.2)	10.0 (3.0)
30 (762)	5.0 (1.5)	4.5 (1.4)	4.5 (1.4)	4.0 (1.2)	4.0 (1.2)	4.0 (1.2)	10.0 (3.0)
36 (914)	5.0 (1.5)	4.5 (1.4)	4.0 (1.2)	4.0 (1.2)	3.5 (1.1)	3.5 (1.1)	10.0 (3.0)
42 (1067)	4.5 (1.4)	4.5 (1.4)	4.0 (1.2)	3.5 (1.1)	3.0 (0.9)	3.0 (0.9)	10.0 (3.0)
48 (1219)	4.5 (1.4)	4.0 (1.2)	4.0 (1.2)	3.5 (1.1)	3.0 (0.9)	3.0 (0.9)	10.0 (3.0)
54 (1372)	4.5 (1.4)	4.0 (1.2)	3.5 (1.1)	3.5 (1.1)	3.0 (0.9)	3.0 (0.9)	10.0 (3.0)
60 (1524)	4.0 (1.2)	4.0 (1.2)	3.5 (1.1)	3.0 (0.9)	3.0 (0.9)	3.0 (0.9)	10.0 (3.0)
72 (1829)	4.0 (1.2)	3.5 (1.1)	3.5 (1.1)	3.0 (0.9)	2.5 (0.8)	2.5 (0.8)	8.0 (2.4)
84 (2134)	3.5 (1.1)	3.5 (1.1)	3.0 (0.9)	2.5 (0.8)	2.5 (0.8)	2.0 (0.6)	8.0 (2.4)
96 (2438)	3.5 (1.1)	3.5 (1.1)	3.0 (0.9)	2.5 (0.8)	2.0 (0.6)	2.0 (0.6)	8.0 (2.4)
* Spacing indicated in feet (meters). Spacing may be limited by load rating of idler. See idler load ratings in Tables 5.29 – 5.35							

Table 5.18
Suggested normal spacing, (S_i), of belt idlers

Thailand

Return Idler Spacing

The suggested normal spacing of return idlers for general belt conveyor work is also given in Table 5.18. For conveyor belts with heavy carcasses, and with a width of 48 inches or more, it is recommended that the return idler spacing be determined by the use of the idler load ratings and belt sag considerations.

Carrying Idler Spacing At Loading Points

At loading points, the carrying idlers should be spaced to keep the belt steady and to hold the belt in contact with the rubber edging of the loading skirts along its entire length. Careful attention to the spacing of the carrying idlers at the loading points will minimize material leakage under the skirtboards and, at the same time, will also minimize wear on the belt cover. Normally, carrying idlers in the loading zone are spaced at half (or less) the normal spacing suggested in Table 5.18.

CAUTION:
If impact idlers are used at loading zones, impact idler ratings are no higher than standard idler ratings.

Good practice dictates that the spacing of idler rolls under the loading area be such that the major discharge portion of the load engages the belt between idlers. Rubber disc idlers are commonly used before, between, and at the end of impact bars. Though this spacing is directed by bar length, idler rating selection and elevation should be considered in these designs.

Troughing Idler Spacing Adjacent To Terminal Pulleys

In passing from the last troughing idler to the terminal pulley, the belt edges are stretched and tension is increased at the outer edges. If the belt edge stress exceeds the elastic limit of the carcass, the belt edge will be stretched permanently and will cause belt-training difficulties. On the other hand, if the troughing idlers are placed too far from the terminal pulleys, spillage of the load is likely.

Distance is important in the change (transition) from troughed to flat form. This is especially significant when deeply troughed idlers are used. Depending on the transition distance, one, two, or more transition type troughing idlers can be used to support the belt between the last standard troughing idler and the terminal pulley. These idlers can be positioned either at a fixed angle or at an adjustable concentrating angle.

THE SELECTION OF IDLERS

Prior to October 1, 1996, CEMA ratings were based on 90,000 hours B_u, useful bearing life, at 500 rpm. B_u values were approximately 3 times L_{10} values. The B_u theory was technically correct. However, L_{10} bearing life is more commonly used and accepted for bearing life calculations and rating. Prior to CEMA publication 502-1996, the CEMA idler selection procedure used idler life factors to calculate an adjusted idler load. Some of these factors were entirely independent of idler load and bearing L_{10} life. This procedure provided a conservative selection based on load but did not necessarily provide clear data relative to expected idler life.

Rating And Idler Life

Idler life is determined by a combination of many factors, such as seals, bearings, shell thickness, belt speed, lump size/material bulk density, maintenance, environment, temperature, and the proper CEMA class of idler to handle the maximum calculated idler load. While bearing life is often used as an indicator of idler life, it must be recognized that the effect of other variables (e.g., seal effectiveness) may be more important in determining idler life than the bearings. Nevertheless, since bearing rating is the only variable for which laboratory tests have provided standard values, CEMA uses bearing L_{10} life as a guide for establishing idler ratings. The definition of L_{10} for belt conveyor idlers: The basic rated life (number

www.CEMANET.org e-Book - Downloaded on 10/31/2017 to Rajamangala University of Technology Srivijaya, Trang, Thailand

of operating hours at 500 rpm) based on a 90 percent statistical model which is expressed as the total number of revolutions 90 percent of the bearings in an apparently identical group of bearings subjected to identical operating conditions will attain or exceed before a defined area of material fatigue (flaking, spalling) occurs on one of its rings or rolling elements. The L_{10} life is also associated with 90 percent reliability for a single bearing under a certain load.

Tables 5.58 through 5.61 show load ratings for CEMA class B, C, D, E and F idlers. These load ratings are based on the Table 5.19

CEMA Class	Minimum L_{10} (h)	Idler rpm
B	30,000	500
C	30,000	500
D	60,000	500
E	60,000	500
F	60,000	500

Table 5.19
CEMA idler load rating parameters

These loads and L_{10} life ratings are minimum ratings for CEMA rated idlers. Actual values for load ratings and L_{10} life for specific CEMA idler class and belt sizes supplied by CEMA Manufacturers may be higher. In some cases the idler frame design could be the limiting factor for load with L_{10} life being a higher value.

Idler Selection Procedure

There are many conditions that affect idler life. Those considered in this selection procedure are:

- Type of material handled.
- Idler load.
- Effect of load on predicted bearing L10 life.
- Belt speed.
- Roll diameter.
- Environmental, maintenance and other special conditions.

In addition to information provided in the Idler Selection Procedure, the above items are summarized as follows:

Type Of Material Handled

The characteristics of the material handled have a direct bearing on the idler selection. The weight of the material governs the idler load and spacing, and lump size modifies the effect of weight by introducing an impact factor. Table 5.28 combines the unit weight and the lump size into a group of empirical factors referred to as K_1. Note that in the table "lump size" means the largest lump which may occasionally be carried rather than the average lump.

www.CEMANET.org licensed this document (31604) on May 24, 2019 to Paderaphim Sritrakool, Sriracha , Thailand

Lump Size Considerations

The lump size influences the belt specifications and the choice of carrying idlers. There is also an empirical relationship between lump size and belt width. The recommended maximum lump size for various belt widths is as follows:

For a 20 degree surcharge, with 10 percent lumps and 90 percent fines, the recommended maximum lump is 1/3 the belt width (BW/3). With all lumps, the recommended maximum lump is 1/5 belt width (BW/5).

For a 30 degree surcharge, with 10 percent lumps and 90 percent fines, the recommended maximum lump is 1/6 the belt width (BW/6). With all lumps the maximum lump is 1/10 the belt width (BW/10).

Idler Load

To select the proper CEMA class of idler, it is necessary to calculate the idler load, CIL. This procedure is shown in "Idler Selection Procedure" Step No. 1 for troughing idlers and Step No. 2 for return idlers.

The idler load should be calculated for peak or maximum conditions. The belt conveyor designer should thoroughly investigate all conditions relative to calculating idler misalignment load (IML), in addition to structure misalignment. The idler height deviation between standard fixed idlers and training idlers (or other special types of idlers) must be accounted for, either by idler class selection, or by conveyor design and installation control.

Impact Forces

Impact forces at conveyor loading points are yet another consideration of idler selection. Whether the conveyed material contains large lumps or is a continuous flow of homogeneous material with no lumps, the impact force should be studied. This process is demonstrated in Step No. 3.

When large lumps, greater than 2 inches (50 mm) are present the impact idler energy rating, WH, may become a factor. Table 5.53 shows the minimum energy rating and the maximum lump size for each CEMA class impact idler. The impact force, F, is then given by Figure 5.20. If the conveyed material does not contain lumps, but instead is a homogeneous stream of material, the impact force is simply the function of the rate of flow and the height for fall. This impact force is given by Figure 5.21.

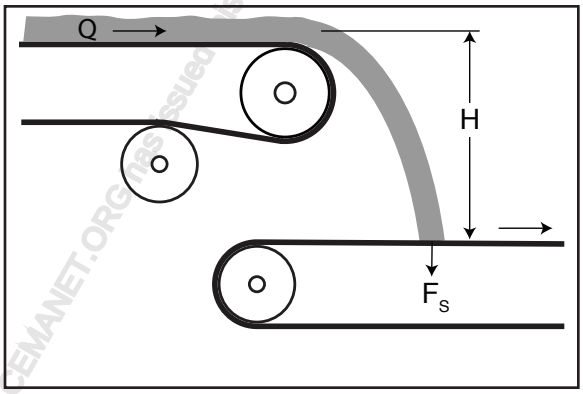

Figure 5.20
Impact force from lump

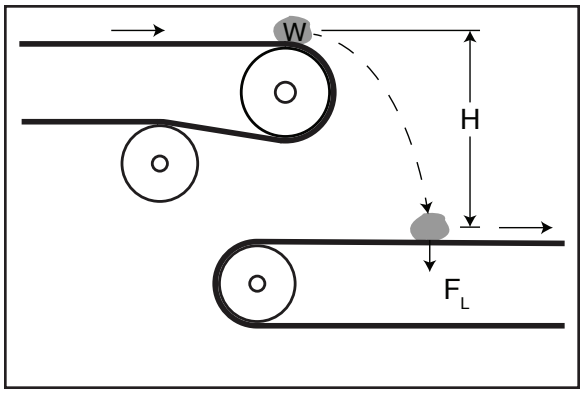

Figure 5.21
Impact force from stream of material

WWW.CEMANET.ORG Thursday, April 24, 2017 10:26:40 AM Copyright (c) 2010 Conveyor Technology Ltd

$$F_L = W + (2 \times k \times WH)^{1/2}$$

Equation 5.22
F_L, Impact force from single lump

$$F_S = 0.1385 \times Q \times H^{1/2} \quad \text{(lbf)}$$
$$F_S = 1.23 \times Q \times H^{1/2} \quad \text{(kgf)}$$

Equation 5.23
F_s, Impact from stream of bulk material

Where:

F_L = Force from impact of a single falling lump [lbf (N)]
F_s = Force from impact of a stream of bulk material [lbf (N)]
W = The weight of the lump in [lbf (N)]
k = Spring constant of the idler [lbf/ift (N/m)]
H = Height of the drop [ft (m)]
Q = Design capacity [tph (mtph)]

EFFECT OF LOAD ON PREDICTED BEARING L_{10} LIFE

When calculated idler load, CIL, is less than CEMA load rating of the idler selected, the bearing L_{10} life will increase. Figure 5.30, Step No. 3, shows this relationship for either a tapered roller bearing or a ball bearing idler design. This chart can be used in conjunction with the type of service or life expectancy of the conveyor system. If the specified design life of the conveyor system exceeds the CEMA L_{10} life rating at rated load, it may still meet specification based on percent of rated idler load vs. calculated idler load, CIL or CIL_R for return idlers.

BELT SPEED

Bearing life, L_{10} is based on the number of revolutions of the bearing race. The faster the belt speed, the more revolutions per minute and consequently, a shorter life for a given number of revolutions. All CEMA L_{10} life ratings are based on 500 rpm. Table 5.23 lists belt speed at 500 rpm for standard roll diameters.

Roll Diameter in (mm)	Belt Speed fpm (m/s)
4.0 (102)	534 (2.7)
5.0 (127)	654 (3.3)
6.0 (154)	785 (4.0)
7.0 (179)	916 (4.7)
8.0 (203)	1047 (5.3)

Table 5.24
Belt speeds for various idler roll diameters at 500 rpm

Figure 5.30, Step No. 4, shows the effect of belt speed on predicted bearing L_{10} life. However, suitable belt conveyor speeds also depend upon the characteristics of the material to be conveyed, the capacity desired, and the belt tensions employed. This subject is covered in more detail in Chapter 4.

www.CEMANET.ORG has issued this document (11604) on Apr 24, 2014 to Parapom Smirnov, Sergey, Parapom Smirnov, Sergey, Licensed

Roll Diameter

For a given belt speed, using larger diameter rolls will increase idler bearing L_{10}. Figure 5.31, Step No. 5 shows this relationship. In addition, since larger diameter rolls will be contacting the belt less due to a slower rpm (at a given belt speed), the wear life of the shell will be increased.

Environmental, Maintenance And Other Conditions

Step No. 6 in the idler selection procedure identifies conditions that will affect potential idler life. All of these conditions do not have an exact mathematical basis and therefore can be very subjective. The most important phase of this step is identifying the idler life condition for the application and then arriving at solutions to obtain maximum idler life for that application. Since idler roll configuration, type of bearing, and seal design can vary with each idler manufacturer, it is logical to state that idler life can also vary for a given environmental and maintenance condition.

Figures 5.33 through 5.35 show general conditions which will affect idler life. Those conditions are independent of idler load but can cause idler failure before obtaining predicted L_{10} life rating. CEMA recommends contacting your CEMA Member idler manufacturer for assistance in establishing guidelines for "Potential Idler Life" for the various conditions shown or any unusual conditions not listed.

Special Conditions

Idler roll shell material usually used throughout the industry is electric resistance welded steel mechanical tubing. For most belt conveyor applications, this material provides sufficient idler life most economically. For severe abrasive or corrosive conditions, covered idler rolls are available in a variety of materials. CEMA has not compiled a relative wear index or corrosion compatibility index for these various materials. This information can be supplied by your CEMA idler manufacturer. However, the economic issue vs. increased life should be investigated thoroughly. Some of the generically available materials are listed below. There are numerous grades available in each of these materials which will affect performance.

- Steel sleeves
- Rubber lagging
- Neoprene lagging
- Polyethylene sleeves/rolls
- Carboxylated Nitrile
- Urethane
- Ceramic

Another consideration for increasing shell wear life is to use thicker metal shells. Some idler manufacturers customarily supply larger diameter rolls with thicker metal shells and usually offer optional shell thickness for all roll diameters. Idler shell wear life is more of a factor for the return idlers since it normally contacts the "dirty" side of the belt resulting in abrasive wear of the shell. The exception to this would be a conveyor system with a belt turnover system. With normal conveyor systems, materials build up on the roll and increase its effective diameter. Because the buildup is never uniform and usually is less at the belt edges, the clean sections of the return roll travel at a slower surface speed than that of the belt. This results in relative slippage, thereby accelerating wear of both the belt cover and the surface of the roll. Thus the life of the roll shell is usually shorter on return belt idlers than on carrying idlers. The material buildup can also aggravate belt training.

www.CEMANet.org has issued this document (5th Ed.) on Apr 4, 2017 to Patterson Stidolph Consulting, Thailand

PREFACE TO SELECTION PROCEDURE, FIGURES AND TABLES

Initial Selection, Steps 1 and 2:

Select idler class by comparing calculated idler load with carrying and return idler load ratings, CIL and CIL_R, from Tables 5.37 through 5.43. CEMA Member idler manufacturers have standard designs meeting these load ratings and dimensional standards shown in tables listed in this publication.

Bearing L_{10} Life Correction, Steps 3, 4, and 5:

Factors K_2 , Figure 5.30, and K_{3A} , Figure 5.31, are multiplying factors used to adjust basic L_{10} life rating of idler class selected. Factor K_2 is based on percent of idler load and K_{3A} is a factor for actual roll speed. Factor K_{3B} , Figure 5.30, Step No. 5 is an optional step showing the advantage of using larger diameter rolls. It can be used as a multiplier to save repeating step 4 if a larger diameter roll is used.

Determine Potential Idler Life, Step 6:

Factors K_{4A} , Figure 5.34, K_{4B} , Figure 5.35, and K_{4C} , Figure 5.36, show conditions which will affect idler life and are independent of bearing L_{10} life, idler load and idler class. Use these figures to evaluate the potential expected idler life. Contact your CEMA Member idler manufacturer for recommendations.

Step No. 1: Troughing Idler Class Selection

$$CIL = ((W_b + (W_m \times K_1)) \times S_i) + IML$$

Equation 5.25
CIL, Calculated idler load

Where:

W_b = Belt weight per unit length, use actual belt weight or estimate from Table 5.28
W_m = Material weight per unit length [lbf/ft (kgf/m)]
Q = Design quantity of material conveyed per hour [tph (mtph)]
V = Design belt speed [ft/min (m/s)]
S_i = Spacing of idlers [ft (m)]
K_1 = Lump adjustment Factor from Table 5.29

Note:
The actual weight of the lump should be compared with the W_m value. In certain situations it may be necessary to use actual lump weight, W, as W_m. Contact your CEMA Member idler manufacture if you have doubts as to which value to use.

www.CEMAnet.org e-mail:Secretariat@CEMAnet.org 24/01/2018 to Chatchai Suchaeng , , Thailand

IML is the idler misalignment load due to idler height deviation and belt tension.

$$IML = 2 \times \frac{d \times T_n}{S_i}$$

Equation 5.26
IML, Idler misalignment load

Where:

d = Misalignment in Z direction [ft (m)]
T_n = Belt tension in flight "n" [lbf (N)]
S_i = Idler spacing [ft (m)]

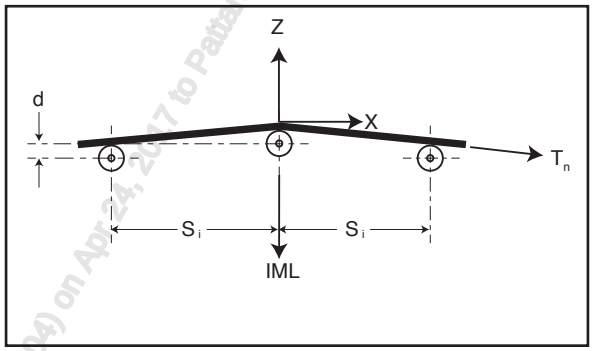

Figure 5.27
Idler misalignment load nomenclature

When an idler is higher than the adjacent idler, a component of belt tension will add load to that idler. The amount of height deviation can vary with the installation and type of idler. CEMA publication, Conveyor Installation Standards 2005 or most current edition (Appendix D) lists recommendations on allowable structure misalignment.

Use CIL and select the proper class of idler from tables 5.37 through 5.43. CIL value should be equal to or less than idler rating. This troughing idler selection procedure for calculated idler load does not include the following:

- Impact force on idler at conveyor loading points.
- Effect of belt transitions (head and tail pulley) on idler load.

See Step No. 3 for impact idler class selection. Contact your CEMA Member idler manufacturer for idler class selection for other loading conditions.

WWW.CEMANET.ORG has issued this document (1604) on Apr 24, 2017 to Pattarapom Sirapoo, Suanluang, , , Thailand

Belt Width (BW) in (mm)	Material Carried lbf/ft³ (kgf/m³)		
	30-74 (481-1185)	75-129 (1201-2066)	130-200 (2082-3204)
18 (457)	3.5 (5.2)	4.0 (6.0)	4.5 (6.7)
24 (610)	4.5 (6.7)	5.5 (8.2)	6.0 (8.9)
30 (762)	6.0 (8.9)	7.0 (10.4)	8.0 (11.9)
36 (914)	9.0 (13.4)	10.0 (14.9)	12.0 (17.9)
42 (1067)	11.0 (16.4)	12.0 (17.9)	14.0 (20.8)
48 (1219)	14.0 (20.8)	15.0 (22.3)	17.0 (25.3)
54 (1372)	16.0 (23.8)	17.0 (25.3)	19.0 (28.3)
60 (1524)	18.0 (26.8)	20.0 (29.8)	22.0 (32.7)
72 (1829)	21.0 (31.2)	24.0 (35.7)	26.0 (38.7)
84 (2134)	25.0 (37.2)	30.0 (44.6)	33.0 (49.1)
96 (2438)	30.0 (44.6)	35.0 (52.1)	38.0 (56.5)
* For Steel Cable Belts Increase Average Belt Weight by 50%			

Table 5.28
W_b, Estimated average belt weight for multiple and reduced ply belts per unit length

Actual belt weights vary with different constructions, manufacturers, cover gauges, etc. Use the above values for estimating. Obtain actual values from the belt manufacturer whenever possible.

Maximum Lump Size in (mm)	Material Weight, lbf/ft³ (kgf/m³)						
	50 (800)	75 (1200)	100 (1600)	125 (2000)	150 (2400)	175 (2800)	200 (3200)
4 (102)	1.0	1.0	1.0	1.0	1.1	1.1	1.1
6 (152)	1.0	1.0	1.0	1.1	1.1	1.1	1.1
8 (203)	1.0	1.0	1.1	1.1	1.2	1.2	1.2
10 (254)	1.0	1.1	1.1	1.1	1.2	1.2	1.2
12 (305)	1.0	1.1	1.1	1.2	1.2	1.2	1.3
14 (356)	1.1	1.1	1.1	1.2	1.2	1.3	1.3
16 (406)	1.1	1.1	1.2	1.2	1.3	1.3	1.3
18 (457)	1.1	1.1	1.2	1.2	1.3	1.3	1.4

Table 5.29
K_1, Lump Adjustment Factor

Step No. 2 Return Idler Class Selection

Use the Equation 5.22 without the weight of the material times K_1 as Calculated Return Idler Load ($CIL_R = (W_B \times S_i) + IML$). Select the proper class of return idler from Tables 5.37 through 5.43. CIL_R should be equal to or less than return idler rating.

www.CEMA.org has issued this document (4.0.4) on April 24, 2017 to Patamporn Boonyarit (pboonyarit@yahoo.com), Thailand.

Step No. 3: K_2 Effect Of Load On Predicted Bearing L_{10} Life

When Calculated Idler Load (CIL or CIL_R) is less than the CEMA load rating of the class of idler selected, the bearing L_{10} life will increase.

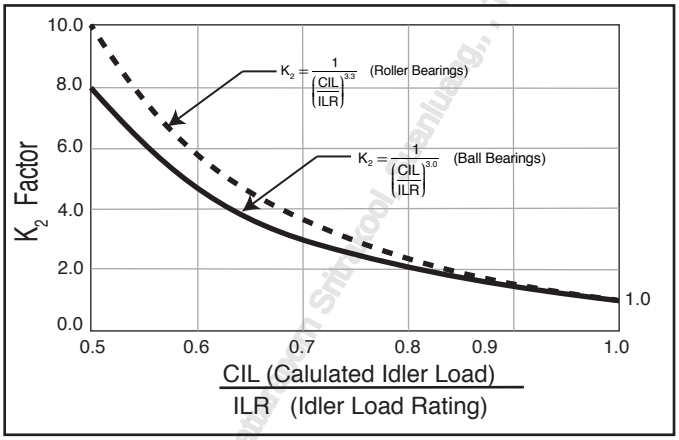

Figure 5.30
K_2, Effect of load on predicted bearing L_{10} life (dimensionless)

Step No. 4: K_{3A} Effect Of Belt Speed On Predicted Bearing L_{10} Life

CEMA L_{10} life ratings are based on 500 rpm. Slower speeds increase life and faster speeds decrease life. Figure 5.31 shows this relationship.

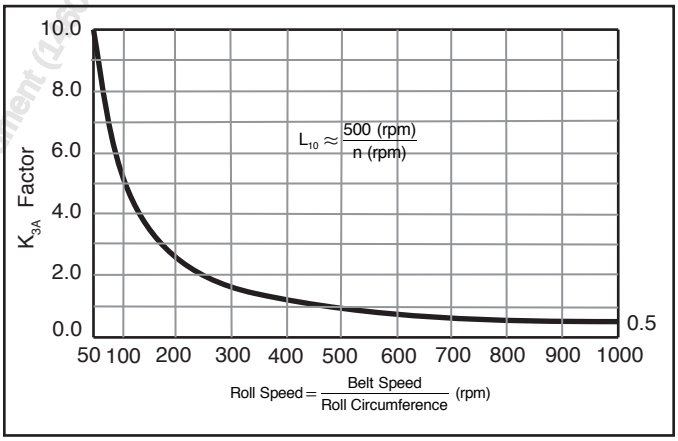

Figure 5.31
K_{3A}, Effect of belt speed on predicted bearing L_{10} life (dimensionless)

WWW.CEMANET.ORG has issued this document (1/30/01) to Patrick Smith (Rexnord Chain Group, Thailand)

Step No. 5: K_{3B} Effect Of Roll Diameter On Predicted Bearing L_{10} Life

For a given belt speed, using larger diameter rolls will increase idler L_{10} life. Figure 5.32 depicts L_{10} life adjustments for various roll diameters using 4 inch diameter as a value of 1.0. Percent of life increase can be calculated for each roll diameter increase.

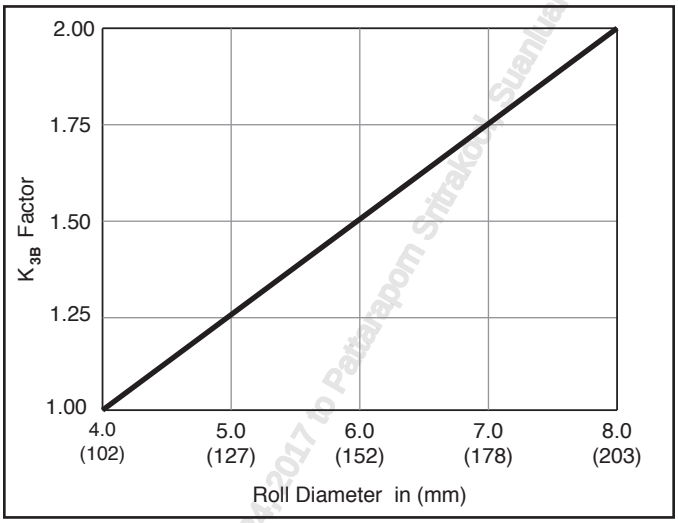

Figure 5.32
K_{3B}, Effect of roll diameter on predicted bearing L_{10} life based on same belt speed (dimensionless)

Given: 5.0 in roll diameter, $K_{3b} = 1.25$

Calculate: Predicted L_{10} Life increase for 6.0 in roll, $K_{3B} = 1.50$

Predicted L_{10} Increase = $\frac{1.50}{1.25} = 1.20$ or 120%

Figure 5.33
Example of roll diameter effect on predicted bearing L10 life

Note:
In addition to increased predicted bearing L_{10} life, larger diameter rolls can increase idler wear life.

Step No. 6 K_4: Environmental, Maintenance, And Other Special Conditions

Figure 5.33 K_{4A} = Effect of maintenance on potential idler life

Figure 5.34 K_{4B} = Effect of environment on potential idler life

Figure 5.35 K_{4C} = Effect of operating temperature on potential idler life

Based on collective application experience by CEMA Member idler manufacturers, these conditions are very important in determining predicted idler life. However, the exact mathematical basis is very subjective, so contact your CEMA Member idler manufacturer for assistance or for any unusual conditions not listed.

www.CEMA-ONLINE.org has issued this document (3.2004) to Apr 24 2017 to Pattarapom Sritrakool, Suanluang, , Thailand

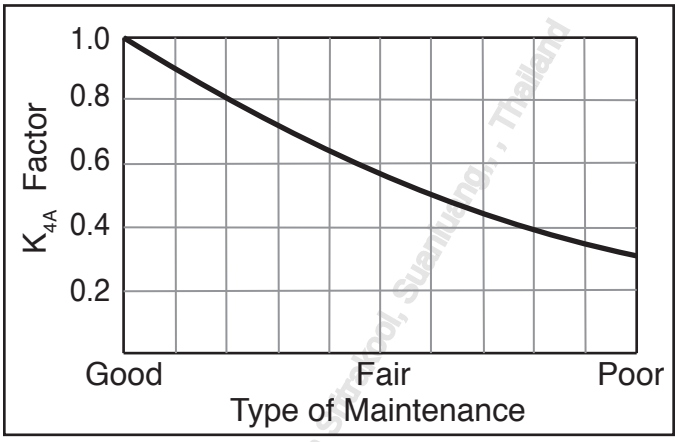

Figure 5.34
K_{4A}, Effect of maintenance on potential idler L_{10} life (dimensionless)

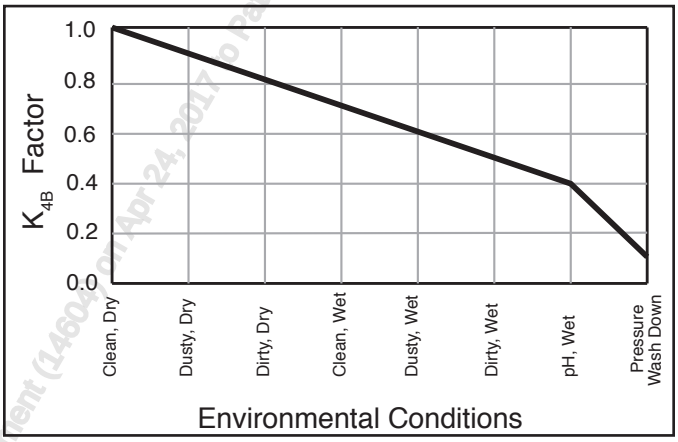

Figure 5.35
K_{4B}, Effect of environmental conditions on potential idler L_{10} life (dimensionless)

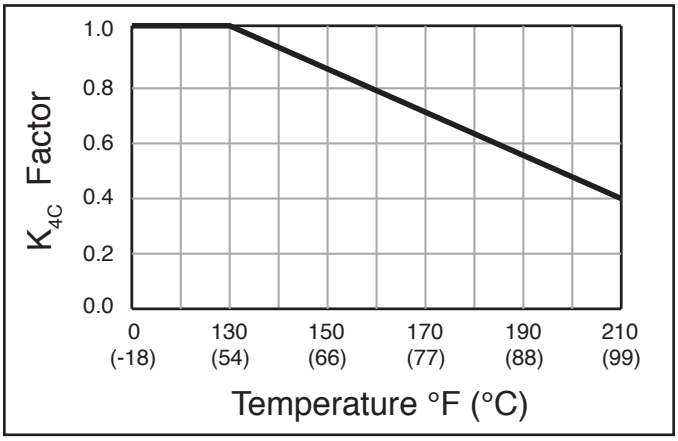

Figure 5.36
K_{4C}, Effect of operating temperature on potential idler L_{10} life (dimensionless)

WWW.CEMANET.ORG has issued this document (14604) on Apr 24, 2017 to Pattaraporn Srirod, Suanluang , , Thailand

RIGID FRAME IDLERS LOAD RATING, ILR, AND CAPACITY TABLES

- Troughing idler load ratings are for three equal length rolls, tables 5.37 through 5.41
- Picking idlers and live shaft idlers, tables 5.42 and 5.43
- Load ratings also apply to impact rolls
- Troughing idler load ratings are based on a load distribution of 70% on center roll and 15% on each end roll for all trough angles.

Belt Width in (mm)	Trough Angle lbf (kgf)			Single Return Roller lbf (kgf)
	20°	35°	45°	
18 (457)	410 (186)	410 (186)	410 (186)	220 (100)
24 (610)	410 (186)	410 (186)	410 (186)	190 (86)
30 (762)	410 (186)	410 (186)	410 (186)	165 (75)
36 (914)	410 (186)	410 (186)	396 (180)	155 (70)
42 (1067)	390 (177)	363 (165)	351 (159)	140 (64)
48 (1219)	380 (172)	353 (160)	342 (155)	125 (57)
ILR Ratings based on minimum L_{10} of 30,000 hours at 500 rpm.				

Table 5.37
CEMA class B idler load ratings

Belt Width in (mm)	Trough Angle lbf (kgf)			Single Roll Return lbf (kgf)	Two Roll "Vee" Return lbf (kgf)
	20°	35°	45°		
18 (457)	900 (408)	900 (408)	900 (408)	475 (215)	
24 (610)	900 (408)	900 (408)	900 (408)	325 (147)	
30 (762)	900 (408)	900 (408)	900 (408)	250 (113)	500 (227)
36 (914)	900 (408)	837 (380)	810 (367)	200 (91)	500 (227)
42 (1067)	850 (386)	791 (359)	765 (347)	150 (68)	500 (227)
48 (1219)	800 (363)	744 (337)	720 (327)	125 (57)	500 (227)
54 (1372)	750 (340)	698 (317)	675 (306)	*	500 (227)
60 (1524)	700 (318)	650 (295)	630 (286)	*	500 (227)
66 (1676)				*	500 (227)
ILR Ratings based on a minimum L_{10} of 30,000 hours at 500 rpm. * Use CEMA D Return idler.					

Table 5.38
CEMA class C idler load ratings

www.CEMA-Online.com Document (1460-4) on Apr 24, 2015 10:00:00 Sriracha, Suanluang, , Thailand

Belt Width in (mm)	Trough Angle lbf (kgf)			Single Roll Return lbf (kgf)	Two Roll "Vee" Return lbf (kgf)
	20°	35°	45°		
24 (610)	1200 (544)	1200 (544)	1200 (544)	600 (272)	
30 (762)	1200 (544)	1200 (544)	1200 (544)	600 (272)	
36 (914)	1200 (544)	1200 (544)	1200 (544)	600 (272)	850 (386)
42 (1067)	1200 (544)	1200 (544)	1200 (544)	500 (227)	850 (386)
48 (1219)	1200 (544)	1200 (544)	1200 (544)	425 (193)	850 (386)
54 (1372)	1200 (544)	1116 (506)	1080 (490)	375 (170)	850 (386)
60 (1524)	1150 (522)	1070 (485)	1035 (469)	280 (127)	850 (386)
66 (1676)				215 (98)	850 (386)
72 (1829)	1050 (476)	977 (443)	945 (429)	155 (70)	850 (386)
78 (1981)				125 (57)	850 (386)
ILR Ratings based on a minimum L_{10} of 60,000 hours at 500 rpm.					

Table 5.39
CEMA class D idler load ratings

Belt Width in (mm)	Trough Angle			Single Roll Return lbf (kgf)	Two Roll "Vee" Return lbf (kgf)
	20°	35°	45°		
36 (914)	1800 (816)	1800 (816)	1800 (816)	1000 (454)	1300 (590)
42 (1067)	1800 (816)	1800 (816)	1800 (816)	1000 (454)	1300 (590)
48 (1219)	1800 (816)	1800 (816)	1800 (816)	1000 (454)	1300 (590)
54 (1372)	1800 (816)	1800 (816)	1800 (816)	925 (420)	1300 (590)
60 (1524)	1800 (816)	1800 (816)	1800 (816)	850 (386)	1300 (590)
66 (1676)				775 (352)	1300 (590)
72 (1829)	1800 (816)	1800 (816)	1800 (816)	700 (318)	1300 (590)
78 (1981)				625 (283)	1300 (590)
84 (2134)	1800 (816)	1674 (759)	1620 (735)	550 (249)	1300 (590)
90 (2286)				475 (215)	1300 (590)
96 (2438)	1750 (794)	1628 (738)	1575 (714)	400 (181)	1300 (590)
102 (2591)				250 (113)	1300 (590)
ILR Ratings based on a minimum L_{10} of 60,000 hours at 500 rpm. Rigid Frame and Catenary where applicable.					

Table 5.40
CEMA class E idler load ratings

WWW.CEMANET.ORG Last downloaded: Document (14) from Apr 24, 2017 to Patcharaporn Sitdhiwej, Bangkok, Thailand

Belt Width in (mm)	Trough Angle lbf (kgf)			Single Roll Return lbf (kgf)	Two Roll "Vee" Return
	20°	35°	45°		
60 (1524)	3000 (1361)	3000 (1361)	3000 (1361)	1500 (680)	**
72 (1829)	3000 (1361)	3000 (1361)	3000 (1361)	1200 (544)	**
78 (1981)	3000 (1361)	3000 (1361)	3000 (1361)	900 (408)	**
96 (2438)	2800 (1270)	2800 (1270)	2800 (1270)	600 (272)	**
ILR Ratings based on minimum L_{10} of 60,000 hours at 500 rpm. Rigid Frame and Catenary where applicable ** For Vee Returns Consider Using CEMA "E" Class					

Table 5.41
CEMA class F idler ratings

Belt Width in (mm)	CEMA C lbf (kgf)	CEMA D lbf (kgf)	CEMA E lbf (kgf)
24 (610)	475 (215)	600 (272)	
30 (762)	475 (215)	600 (272)	
36 (914)	325 (147)	600 (272)	1260 (572)
42 (1067)	250 (113)	600 (272)	1200 (544)
48 (1219)	200 (91)	530 (240)	1000 (454)
54 (1372)	150 (68)	440 (200)	1000 (454)
60 (1524)	125 (57)	400 (181)	1000 (454)
72 (1829)		280 (127)	925 (420)
84 (2134)			775 (352)
96 (2438)			625 (283)
ILR Ratings based on a minimum L_{10} for C Class 30,000 hours At 500 rpm and 60,000 hours for D and E Class			

Table 5.42
CEMA picking idler load ratings

WWW.CEMANET.ORG has granted (1600) CEMA Publications to Pattarapron Sirakoul, Songkhla, Thailand

Belt Width in (mm)	CEMA C	CEMA D	CEMA E
18 (457)	1200 (544)		
24 (610)	1200 (544)	1400 (635)	2100 (953)
30 (762)	1200 (544)	1400 (635)	2100 (953)
36 (914)	1200 (544)	1400 (635)	2100 (953)
42 (1067)	1100 (499)	1400 (635)	2100 (953)
48 (1219)	1000 (454)	1275 (578)	2100 (953)
54 (1372)	875 (397)	1150 (522)	2100 (953)
60 (1524)	780 (354)	1000 (454)	2100 (953)
72 (1829)		850 (386)	2100 (953)
84 (2438)			1825 (828)
ILR Ratings based on a minimum L_{10} for C Class 30,000 hours At 500 rpm and 60,000 hours for D and E Class			

Table 5.43
CEMA live shaft idler load ratings

EXAMPLE IDLER SELECTION

Based on the example data, recommend the idler class and spacing for a system handling coal.

Q = Design capacity = 3,000 tph
γ_m = Bulk density = 55 to 60 lb/ft^3
ϕ_s = Surcharge angle = 20 degrees
BW = Belt Width = 60 in
V = Belt speed = 650 fpm
H = Transfer drop height 12 ft
T_1 = Belt tension approaching drive pulley = 37,000 lbf
T_2 = Belt Tension retreating from drive pulley = 12,000 lbf
d = Idler misalignment in "Z" direction = 0.25 in
L_{10} = Design life = 50,000 hours
Lump Size = 8-inch minus
Belt Weight = 19 lbf/ft
Maintenance: Good to Fair
Environmental: Dirty, Wet
Temperature: < 120 °F (35°C)

Figure 5.44
Example Idler Selection: data

WWW.CEMANET.ORG has issued this document to Apr for 24-7 to Patalan Steel Structural Engineering (Thailand)

Example Step 1: Troughing Idler Class Selection

$$W_m = \frac{Q}{V} = \frac{3000\frac{t}{h} \times 2000\frac{lbf}{t}}{650\frac{ft}{min} \times 60\frac{min}{h}} = 153.8 \text{ lbf/ft} \therefore \text{ use } 154 \text{ lbf/ft}$$

Figure 5.45
Example Idler Selection: bulk material weight per unit length

Verify that the conveyor has enough volume capacity using the range of assumed bulk densities..

Per Table 4.9 - 35° troughed belt cross section of load:

60 inch BW @ 20° Surcharge = 2.876 ft^2

Full belt load @ 55 lbf/ft^3 = 2.876 ft^2 × 55 lbf/ft^3 = 158.2 lbf/ft ∴ use 158 lb/ft

Full belt load @ 60 lbf/ft^3 = 2.876 ft^2 × 60 lb/ft^3 = 172.6 lbf/ft ∴ use 173 lb/ft

Percent full loads: $\frac{154}{158} \times 100 = 97.5\%$ $\frac{154}{173} \times 100 = 89.0\%$

Use the lightest possible bulk density to insure enough belt volume capacity.

Figure 5.46
Example Idler Selection: percent full load check

Since 3,000 tph has been identified as a Peak Load, the belt width, belt speed, and trough angle shown are good selections.

Per Table 5.18: Suggested normal spacing of belt conveyor idlers, S_i:

- 60 inch BW @ 50 lbf/ft3 = 4.0 ft (1524 mm BW @ 800 kgf/m3 = 1.2 m)
- 60 inch BW @ 75 lbf/ft3 = 3.5 ft (1524 mm BW @ 1200 kgf/m3 = 1.1 m)

Note:
Factors to be considered when selecting idler spacing are belt weight, material weight, idler rating, idler life, belt rating, and belt tension. For general conveyor design and selection, limit belt sag to 2 percent of carrying idler spacing at minimum tension conditions in each flight. Sag limits during conveyor starting and stopping and in the impact idler flights should also be considered in overall selection.

Use a preliminary selection of 4 feet (1.2 m) and K_1 = 1.0 for 8-inch (203 mm) lumps for carrying/troughing idler class selection based on Tables 5.18 and 5.29

WWW.CEMAEF.ORG has loaded this document (1466A) on Apr 25, 2014 to Rupesh Patil, Sriracha, Thailand

$$CIL = ((W_b + (W_m \times K_l)) \times S_i) + IML \quad \text{(Equation 5.25)}$$

$$IML = \frac{2 \times d \times T_n}{S_i} = \frac{2 \times 0.25 \text{ in} \times \frac{1 \text{ ft}}{12 \text{ in}} \text{ x } 37{,}000 \text{ lbf}}{4 \text{ ft}} = 385.4 \text{ lbf (Equation 5.26)}$$

$$CIL = ((19 \frac{\text{lbf}}{\text{ft}} + (154 \frac{\text{lbf}}{\text{ft}} \times 1.0)) \times 4 \text{ ft}) + 385.4 \text{ lbf} = 1077.4 \text{ lbf (329 kgf)} \therefore \text{ use 1077 lbf}$$

Figure 5.47
Example Idler Selection: calculated carrying idler load

Per Table 5.39, CEMA class D x 35° = 724 lbf (329 kgf) rating Per Table 5.40, CEMA class E x 35° = 1800 lbf (816 kgf) rating

Note:
Although it is recommended that CIL be equal to or less than CEMA Idler Load Rating, there is a certain amount of judgment involved in final selection. In this example, an experienced belt designer would know that the maximum IML load based on belt tension occurs at the head or discharge for a level or incline conveyor. Since belt tension would be decreasing from this point towards the tail or loading end, the number of idlers that slightly exceeded the CEMA Idler Load Rating could be determined. Therefore, CEMA class D x 35 degrees could be used and verification requested from CEMA Member idler manufacturer.

Other choices are:

- D class at less than 4 feet (1.2 m) spacing.
- E class at greater than 4 feet (1.2 m) spacing.
- Increased belt speed, which will decrease W_m. This option would also decrease T_1 belt tension, which would decrease IML.
- Maintain less than 0.25 inch (6.3 mm) height deviation on installation tolerances.

Some of these choices would require recalculating belt tensions, etc., and then weighing the economics with the expected performance of each selection. For this example, we will select CEMA class D x 35 degree troughing idlers at 4 feet (1.2 m) spacing, although optional choices to increase the speed or decrease the misalignment have merit. The rated bearing L_{10} life is 60,000 hours.

WWW.CEMANET.ORG has licensed this document (1260-4) on April 24, 2018 to Pattarapom Sitrakul, Suanluang, , , Thailand

Example Step 2: Return Idler Class Selection

Option: Table 5.18: The suggested normal spacing of belt conveyor idler (S_i) return idlers, 60 inch (1500 mm) BW is 10 feet (3 m).

$$CIL = ((W_b + (W_m \times K_I)) \times S_i) + IML \quad \text{(Equation 5.25)}$$

$$IML = \frac{2 \times d \times T_n}{S_i} = \frac{2 \times 0.25 \text{ in} \times \frac{1 \text{ ft}}{12 \text{ in}} \times 12{,}000 \text{ lbf}}{10 \text{ ft}} = 50.0 \text{ lbf} \quad \text{(Equation 5.26)}$$

W_m = 0.0 on return idlers and K_I does not apply to return idlers

$$CIL_R = \left((19 \frac{\text{lbf}}{\text{ft}} + (0.0 \times 10.0 \text{ ft})) \times 4 \text{ ft}\right) + 50.0 \text{ lbf} = 240 \text{ lbf (109 kgf)} \therefore \text{ use 240 lbf}$$

Figure 5.48
Example Idler Selection: return idler calculated load, CIL_R

Quite often it is desirable to have return idler spacing at a multiple of the troughing idler spacing to simplify stringer or truss design. However, this should not be the control for selection. Per Table 5.38: class D single roll return = 280 lbf (127 kgf) rating. Per Table 5.38: CEMA class C two roll "Vee" return = 500 lbf (227 kgf) rating. If this conveyor has long centers, consideration should be given to using two roll "Vee" returns and increasing spacing. With the choice of "V" it usually is not necessary to use training idlers. For this example, select CEMA class D single roll returns at 12 feet (3.66 m). The rated bearing L_{10} life is 60,000 hours.

$$CIL = ((W_b + (W_m \times K_I)) \times S_i) + IML \quad \text{(Equation 5.25)}$$

$$IML = \frac{2 \times d \times T_n}{S_i} = \frac{2 \times 0.25 \text{ in} \times \frac{1 \text{ ft}}{12 \text{ in}} \times 12{,}000 \text{ lbf}}{12 \text{ ft}} = 41.7 \text{ lbf}$$

$$W_m = 0.0 \frac{\text{lbf}}{\text{ft}} \text{ on return idlers}$$

$$CIL_R = \left((19 \frac{\text{lbf}}{\text{ft}} + (0.0 \frac{\text{lbf}}{\text{ft}} \times 12.0)) \times 12 \text{ ft}\right) + 41.7 \text{ lbf} = 269.7 \text{ lbf (122.6 kgf)} \therefore \text{ use 270 lbf}$$

Figure 5.49
Example Idler Selection: alternate spacing return idler calculated load, CIL_R

Steps 1 and 2 have selected idlers based on load. Steps 3, 4, and 5 deal with predicted bearing L_{10} life, and Step 6 covers conditions affecting potential idler life.

WWW.CEMANET.ORG this issued is document (1.60.0) on Apr 4, 2017 by gator from Srinakarinwirot University, , , Thailand

Example Step 3: Impact Idler Class Selection

For homogeneous material without lumps use Figure 5.21 and for impact from material containing large lumps use figure 5.20. The calculated impact force is then multiplied by an impact idler spacing factor, f, Table 5.49 to determine the impact force on one idler. Use this unit impact force, F, and select the proper class of impact idler from Tables 5.37 through 5.43. F should be equal to or less than the idler rating.

CAUTION:

k = spring constant for specific idler type (lbf/ft or kgf/mm). Consult CEMA Member idler manufacturer for the value of k. For this example use k = 2,500 lbf/in.

Impact Idler Spacing $S_{i\text{-impact}}$ ft (m)	Impact Idler Spacing Factor, *f*
1.0 (0.3)	0.5
1.5 (0.5)	0.7
2.0 (0.6)	0.9
>2.0 (>0.6)	1.0

Table 5.50
Impact Idler spacing factor, *f* (dimensionless)

Given: k = 1000 lbf/in, H = 10 ft, Q = 3,000 tph w = 8-inch minus, $k = 2{,}500\frac{\text{lbf}}{\text{in}}$

Assume: A lump can be a slab 3 times the length of the nominal lump size, w

W = Weight of lump = $3 \times w^3 \times \gamma_m$

$$W = \frac{3 \times (8\text{ in})^3 \times 60\frac{\text{lbf}}{\text{ft}^3}}{1{,}728\frac{\text{in}^3}{\text{ft}^3}} = \frac{1{,}536 \times 60}{1{,}728} = 53.3\text{ lbf}$$

Asssume: Lump is round

W = Weight of lump = $\frac{\pi \times w^3}{6} \times \gamma_m$

$$W = \frac{\pi \times (8\text{ in})^3}{6 \times 1728\frac{\text{in}^3}{\text{ft}^3}} \times 60\frac{\text{lbf}}{\text{ft}^3} = \frac{96{,}508.7}{10{,}368} = 9.3\text{ lbf}$$

From Table 5.28 f = 1.0

$F_l = W + (2 \times k \times WH)^{1/2} \times f$ (single lump see Equation 5.22)

$$F_{l\text{–slab}} = 53.3\text{ lbf} + \left(2 \times 2{,}500\frac{\text{lbf}}{\text{in}} \times 12\frac{\text{in}}{\text{ft}} \times 53.3\text{ lbf} \times 10\text{ ft}\right)^{1/2} \text{x } 1.0 = 53.3\text{ lbf} + 5{,}655.1\text{ lbf} = 5{,}706.4\text{ lbf}$$

$$F_{l\text{–lump}} = 9.3\text{ lbf} + \left(2 \times 2{,}500\frac{\text{lbf}}{\text{in}} \times 12\frac{\text{in}}{\text{ft}} \times 9.3\text{ lbf} \times 10\text{ ft}\right)^{1/2} \times 1.0 = 9.3\text{ lbf} + 2{,}362.2\text{ lbf} = 2{,}371.5\text{ lbf}$$

$F_s = 0.1389 \times Q \times H^{1/2} \times f$ (homogenous stream see Equation 5.23)

$$F_s = 0.1389\frac{\text{ft-h-lbf}}{\text{t}} \times 3{,}000\frac{\text{t}}{\text{h}} \times (10\text{ ft})^{1/2} \times 1.0 = 1318.1\text{ lbf}$$

Figure 5.51
Example Idler Selection: impact Idler calculated force, F, based on spacing and type of impact

WWW.CEMANET.ORG is licensed for document (14004) on Apr 21, 201 to Pattarapom Sirakool, Suandang, Thailand

Using calculated energy rating W x H, and maximum lump size to select the proper CEMA class of Impact Idler from Table 5.51. Both W x H and lump size should be equal to or less than the idler energy rating and maximum lump size.

$$E_i = W \times H$$

Equation 5.52

E_i , Impact energy for impact idler selection

Three Roll Rubber Impact Idlers		
CEMA Class	**WH ft-lbf (kgf-m)**	**Maximum Lump Size in (mm)**
B	**40 (5.5)**	**4 (102)**
C	**160 (22.1)**	**6 (154)**
D	**240 (33.2)**	**8 (203)**
E	**460 (63.6)**	**12 (305)**
F	**870 (120.3)**	**18 (457)**

Figure 5.53
Minimum energy ratings for impact idlers

Given : Lump size, w, = 8-inch minus, Bulk Density, $\gamma_m = 60 \frac{lbf}{ft^3}$, Drop Height, H, = 10 ft

Assume: A lump can be a slab up to 3 times the length of the nominal lump size, W

W = Weight of slab = $3 \times W^3 \times \gamma_m$

$$W = \frac{3 \times (8\ in)^3 \times 60 \frac{lbf}{ft^3}}{1{,}728 \frac{in^3}{ft^3}} = \frac{1{,}536 \times 60}{1{,}728} = 53.3\ lbf$$

Asssume : Lump is round

W = Weight of lump = $\frac{\pi \times W^3}{6} x\ \gamma_m$

$$W = \frac{\pi \times (8\ in)^3}{6 \times 1728 \frac{in^3}{ft^3}} \times 60 \frac{lbf}{ft^3} = \frac{96{,}508.7}{10{,}368} = 9.3\ lbf$$

$E_i = W \times H$ (Ref. Equation 5.52)

E_{i-slab} = 53.3 lbf × 10 ft = 533 ft-lbf (73.6 m-kgf)

E_{i-lump} = 9.3 lbf × 10 ft = 93 ft-lbf (12.8m-kgf)

CEMA class D impact energy rating = 240 ft-lbf

∴ CEMA class D is acceptable for lumps but not slabs

Figure 5.54
Example Idler Selection: impact force calculation method for impact idler selection

www.CEMA-Org.com Licensed to this Document (14-14) on Apr 2, 2017 to Patsapom Sritalay Saenkang, , , Thailand

Example Step 4: K_2 Effect Of Load On Predicted Bearing L_{10} Life

$$\frac{\text{CIL}}{\text{Idler Load Rating}} = \frac{1077 \text{ lbf}}{1070 \text{ lbf}} = 1.007$$

From Figure 5.28, $K_2 \approx 1.0$ (Tapered roller bearing)

Increase in $L_{10} = L_{10} \times K_2 = 60{,}000 \times 1.0 = 60{,}000$ h

Figure 5.55

Example Idler Selection: effect of K_2 on predicted troughing idler bearing L_{10} life

Given: Calculated return idler load, CIL_R, = 222 lbf

CEMA D class return idler rating, ILR, = 280 lbf

$$\frac{CIL_R}{ILR} = \frac{270 \text{ lbf}}{280 \text{ lbf}} = 0.96$$

$\therefore K_2 \approx 1.15$ (Figure 5.28, Tapered roller bearing)

Increase in $L_{10} = L_{10} \times K_2 = 60{,}000$ h $\times$ 1.15 = 69,000 h

Figure 5.56

Example Idler Selection: effect of K_2 on predicted return idler bearing L_{10} life

Example Step No. 5: K_{3A} Effect Of Belt Speed On Predicted Bearing L_{10} Life

Given: 650 fpm belt speed, L_{10} = 60,000 h

Select minimum roll diameter for < 500 rpm at 650 fpm

5 inch diameter = 654 fpm at 500 rpm (Table 5.24)

$K_{3A} \approx 1.0$ for 500 rpm (Figure 5.31)

Bearing L_{10} life for CEMA class D5 series idlers at 650 fpm

Troughing idler = (60,000 $\times$ 1.0) = 60,000 hours

Return idler = (69,000 $\times$ 1.0) = 69,000 hours

Figure 5.57

Example Idler Selection: effect of K_{3A} on predicted bearing L_{10} life

WWW.CEMANET.ORG has issued this document (1460) on Apr 24, 2014 to Prabhat Mishra (Tool, Suan Heng, , Thailand

Example Step No. 6: K_{3B} Effect Of Roll Diameter On Predicted Bearing L_{10} Life

From Figure 5.33 select K_{3B} Factors for the different roll sizes and calculate the predicted bearing life increase.

Given: $K_{3B\text{-}5\ inch\ roll} = 1.25$, $K_{3B\text{-}6\ inch\ roll} = 1.50$ (Figure 5.32)

$$K_{3B}\ \text{Life Increase} = \frac{K_{3B\text{-}6\ inch\ roll}}{K_{3B\text{-}5\ inch\ roll}}$$

$$K_{3B}\ \text{Life Increase} = \frac{1.50}{1.25} = 1.20\ \text{ or 20\% predicted } L_{10}\ \text{life increase}$$

Troughing idler: 6-inch L_{10} = 5-inch $L_{10} \times K_{3B}$ = 60,000 h × 1.20 = 72,000 h

Return idler: 6-inch L_{10} = 5-inch $L_{10} \times K_{3B}$ = 69,000 h × 1.2 = 82,800 h

Figure 5.58
Example Idler Selection: compare bearing L_{10} life increase, 6-inch vs. 5-inch diameter rolls

Note:

In addition, the 6-inch (154 mm) roll would have longer wear life, and roll resistance would be less, which would decrease belt tension and reduce IML.

CEMA class D6 idlers are preliminarily recommended; Idler selection is based on the ultimate requirement for 60,000 hours minimum L_{10} life.

- Troughing idlers CEMA class D6 x 35° at 4 feet (1.2 m) spacing with 72,000 hours predicted bearing L10 life.
- Impact idlers CEMA class D6 x 35° at 2 feet (600 mm) spacing with 54,000 hours predicted bearing L10 life.
- Return idlers D6 at 12 ft (3.9 m) spacing with 82,800 hours predicted bearing L10 life.

WWW.CEMANET.ORG has issued this document (1450) on 10/2/2013 to Patrapom Sitokol, Suanluang, , , Thailand

Example Step No. 7: K_4 Effect Of Environmental, Maintenance, And Temperature On Potential Idler Life

For the purpose of example, assume the following conditions:

$K_{4A} \approx 0.75$ Maintenance: Good to Fair (Figure 5.34)
$K_{4B} \approx 0.50$ Environmental: Dirty (Figure 5.35)
$K_{4C} \approx 1.00$ Temperature: <120 °F (35°C) (Figure 5.35)
L_{10} Predicted K_4 bearing life decrease $\approx K_{4A} \times K_{4B} \times K_{4C}$
D6 Troughing idler L_{10} = 72,000 h
L_{10} Predicted K_4 factors effect on troughing idler bearing life $\approx$ 72,000 h $\times$ 0.75 $\times$ 0.50 $\times$ 1.00 = 27,000 h
D6 Impact idler L_{10} = 144,000 h
L_{10} Predicted K_4 factors effect on impact idler bearing life $\approx$ 144,000 h $\times$ 0.75 $\times$ 0.50 $\times$ 1.00 = 54,000 h
D6 Return idler L_{10} = 82,800 h
L_{10} Predicted K_4 factors effect on return idler bearing life $\approx$ 82,800 h $\times$ 0.75 $\times$ 0.50 $\times$ 1.00 = 31,050 h

Figure 5.59
Idler Selection Example: K_4 factors effect on predicted bearing life

Hostile environmental conditions and the level of commitment to belt conveyor installation and maintenance will affect idler life. With the above assumed conditions it is apparent that potential idler life will be less than the predicted bearing L_{10} life. Expected or potential idler life may also be limited by shell wear which can vary considerably with each installation. In addition to conveyed material characteristics, environmental, and maintenance factors, idler alignment and belt cleaning can have a significant effect on shell wear and idler life. These conditions should be discussed with your CEMA Member manufacturer.

CAUTION:
Calculated idler loads should be repeated for training idlers (if used). Height deviation for training idlers must be included for IML calculation or controlled by shimming and maintaining closer installation tolerances at these areas of the conveyor.

Example Conclusion

CEMA class D6 Class idlers with 6-inch (154 mm) diameter rollers and ball bearings were selected with spacing for the impact idlers at 2 feet (600 mm), troughing idlers at 4 feet (1.2 m) and return idler at 10 feet (3 m). The expected bearing life is 27,000 hours for the troughing idlers, 54,000 hours for the impact idlers and 31,050 hours for the return rollers. There are numerous options available to the belt conveyor designer in regard to idler selection. Through involving your CEMA idler manufacturer in this selection process these options can be explored, resulting in a reliable, cost effective installation.

WWW.CEMANET.ORG: No part of this document (5th Edition, 2014) may be reproduced without permission. Downloaded on Aug 04, 2017 to Paterapon Sriakkul, Suanluang, , Thailand

BELT ALIGNMENT

A belt conveyor must be designed, constructed and maintained so that the belt consistently runs centrally on its mechanical system of idlers and pulleys. To accomplish this, the following conditions must prevail:

- Square the tail and head pulleys with the conveyor frame.
- Square all idlers and returns with the conveyor frame; be sure they are in line and lie in the same horizontal plane; and tighten the attachment belts.
- Level all frames to ensure a cross-section parallel to the ground plane. If one side of the conveyor frame is lower than the other, gravity will force the belt off-center.
- The belt must be straight and the belt splice square.
- If side creep occurs only in the vicinity of the belt splice, the splice may not be square with the belt. In general, if the creep follows the belt, there is a problem with the belt. If it remains in one general area, there is a problem with the system.
- The belt should have good contact with all troughing rolls.
- Load material centrally on the belt.

Refer to Appendix D for information on CEMA Conveyor Installation Standards. There may be times when the above procedure is not sufficient and the belt persistently runs to one side. The following corrective measures may be initiated to prevent side creep:

- While running the belt at the lowest speed possible, find the point of maximum side creep. The idler preceding this point along the direction of belt travel can be adjusted to minimize side creep. Facing the conveyor from the tail end, the idler must be pivoted clockwise to correct side creep on the left, and counterclockwise to correct side creep on the right. Once the belt is centered, change to a higher speed (if possible) and load the belt with material. Continue adjusting until normal operating conditions do not cause the belt to misalign.
- If creep persists, insure that the head and tail pulleys are perfectly aligned. Steer the belt with the carrying or return idlers. See Figures 5.10 and 5.15.
- Training idlers can be installed to replace troughing or return idlers. They should only be used in problem systems and should be at least 50 feet (15 m) from any terminal or bend pulleys. Do not use a training idler in a vertical curve. Reversible belt training idlers are available for reversible belt conveyors. Free rotation of the training idler's vertical bearing is essential for satisfactory tracking results.
- If creep still persists, some or all of the troughing idlers may be tilted not more than 2 degrees from the vertical, in the direction of belt travel.
- If none of the above steps solve a belt misalignment condition, the conveyor should be laser aligned and corrective action taken based upon the survey data.

Note:
Maximum tracking effect occurs when the distance between the corrective components and the following components is maximized.

www.CEMANET.ORG has issued this document (1420) on May 27, 2017 to Prit Saporn Smitakorl, Siam Cement, Thailand

AVERAGE WEIGHT OF CEMA IDLER ROTATING PARTS TABLES

Belt Width in (mm)	CEMA Troughing Idler Class - Average Weight of Rotating Parts lbf (kgf)											
	B4	B5	C4	C5	C6	D5	D6	E6	E7	F6	F7	F8
18 (457)	15.0 (6.8)	19.2 (8.7)	14.5 (6.6)	19.1 (8.7)	26.7 (12.1)							
24 (610)	18.3 (8.3)	24.2 (11.0)	17.5 (7.9)	23.2 (10.5)	32.6 (14.8)	23.2 (10.5)	32.6 (14.8)					
30 (762)	21.8 (10.0)	28.3 (12.8)	20.5 (9.3)	26.8 (12.2)	38.0 (17.3)	26.8 (12.2)	38.0 (17.3)					
36 (914)	25.3 (11.5)	33.0 (15.0)	23.5 (10.7)	31.3 (14.2)	43.6 (19.8)	31.3 (14.2)	43.6 (19.8)	64.8 (29.4)	81.8 (37.1)			
42 (1067)	30.8 (14.0)	38.1 (17.3)	26.5 (12.0)	35.2 (16.0)	49.2 (22.3)	35.2 (16.0)	49.2 (22.3)	73.3 (33.3)	91.7 (41.6)			
48 (1219)	32.9 (14.9)	41.6 (18.9)	29.5 (13.4)	39.3 (17.8)	54.8 (24.9)	39.3 (17.8)	54.8 (24.9)	81.9 (37.2)	101.3 (46.0)			
54 (1372)				45.9 (20.8)	62.3 (28.3)	45.9 (20.8)	62.3 (28.3)	93.6 (42.5)	121.8 (55.3)			
60 (1524)				50.1 (22.7)	68.3 (31.0)	50.1 (22.7)	68.3 (31.0)	102.2 (46.4)	132.7 (60.2)	143.0 (64.9)	162.0 (73.5)	180.0 (81.7)
72 (1829)						57.9 (26.3)	77.8 (35.3)	119.4 (54.2)	154.5 (70.1)	169.0 (76.7)	191.0 (86.7)	211.0 (95.8)
84 (2134)								132.0 (59.9)	164.0 (74.5)	195.0 (88.5)	219.0 (99.4)	243.0 (110.3)
96 (2438)								145.3 (66.0)	173.0 (78.5)	221.0 (100.3)	248.0 (112.6)	274.0 (124.4)

Table 5.60
Average weight of three equal roll length troughing idler rotating parts - steel rolls

WWW.CEMANET.ORG has issued this document (14604) on July 7, 2017 for standard purchased, Sukhumvit, , Thailand

Belt Width in (mm)	CEMA Return Roller Idler Class - Average Weight of Rotating Parts lbf (kgf)											
	B4	B5	C4	C5	C6	D5	D6	E6	E7	F6	F7	F8
18 (457)	13.1 (5.9)	16.3 (7.4)	12.2 (5.5)	16.6 (7.5)	21.6 (9.8)							
24 (610)	16.3 (7.4)	20.9 (9.5)	15.2 (6.9)	20.1 (9.1)	27.1 (12.3)	20.9 (9.5)	30.1 (13.7)					
30 (762)	19.5 (8.9)	24.5 (11.1)	18.2 (8.3)	24.0 (10.9)	32.3 (14.7)	25.8 (11.7)	35.4 (16.1)					
36 (914)	22.7 (10.3)	28.5 (12.9)	21.2 (9.6)	28.0 (12.7)	37.6 (17.1)	30.1 (13.7)	40.5 (18.4)	59.0 (26.8)	70.0 (31.8)			
42 (1067)	26.0 (11.8)	33.0 (15.0)	24.6 (11.2)	32.1 (14.6)	43.3 (19.7)	34.3 (15.6)	47.2 (21.4)	67.4 (30.6)	80.1 (36.4)			
48 (1219)	27.4 (12.4)	36.1 (16.4)	27.6 (12.5)	36.1 (16.4)	48.4 (22.0)	38.7 (17.6)	54.4 (24.7)	75.6 (34.3)	89.9 (40.8)			
54 (1372)						43.4 (19.7)	60.8 (27.6)	83.2 (37.8)	99.9 (45.4)			
60 (1524)						49.2 (22.3)	68.1 (30.9)	92.2 (41.9)	109.4 (49.7)	132.0 (60.0)	148.0 (67.2)	163.0 (74.0)
72 (1829)						55.1 (25.0)	74.9 (34.0)	109.4 (49.7)	129.0 (58.6)	156.0 (70.8)	175.0 (79.5)	192.0 (87.2)
84 (2134)								114.0 (51.8)	136.2 (61.8)	181.0 (82.2)	202.0 (91.7)	222.0 (100.8)
96 (2438)								122.0 (55.4)	149.8 (68.0)	205.0 (93.1)	229.0 (104.0)	252.0 (114.4)

Table 5.61
Average weight of single roll return idler rotating parts - steel rolls

WWW.CEMANET.ORG has issued this document (14600) on Apr 24, 20
Kasetsart University Bangkok Suankuang , Thailand

AVERAGE INERTIA OF CEMA CLASS IDLERS TABLES

Tables 5.62 and 5.63 are typical values for the rotational inertia of the rotating parts of idlers. The troughing idler table refers to the sum of all three equal roll idlers as a set. The rotational inertia is used in Chapter 6 to calculate the amount of torque required to accelerate or decelerate a load in a given period of time, or the amount of time it will take to accelerate or decelerate a load at a given torque.

Belt Width in (mm)	CEMA Troughing Idler Class - Average Inertia lbf-in² (kgf-m²)											
	B4	B5	C4	C5	C6	D5	D6	E6	E7	F6	F7	F8
18 (457)	43 (.013)	90 (.026)	45 (.013)	90 (.026)	179 (.052)							
24 (610)	53 (.016)	116 (.034)	56 (0.16)	116 (.034)	224 (.066)	116 (.034)	224 (.066)					
30 (762)	65 (0.19)	140 (0.41)	67 (0.20)	140 (.041)	269 (.079)	140 (.041)	269 (.079)					
36 (914)	78 (.023)	161 (.047)	79 (.023)	161 (.047)	313 (.092)	161 (.047)	313 (.092)	446 (.131)	801 (.235)			
42 (1067)	90 (.026)	185 (.054)	91 (.027)	185 (.054)	358 (.105)	185 (.054)	358 (.105)	502 (.147)	876 (.257)			
48 (1219)	104 (.030)	207 (.061)	105 (.031)	207 (.061)	400 (.117)	207 (.061)	400 (.117)	564 (.165)	1017 (.298)			
54 (1372)				223 (.065)	447 (.131)	223 (.065)	447 (.131)	628 (.184)	1127 (.330)			
60 (1524)				245 (.072)	493 (.144)	245 (.072)	493 (.144)	689 (.202)	1234 (.362)	838 (.246)	1278 (.374)	1901 (.557)
72 (1829)						266 (.078)	538 (.158)	811 (.238)	1451 (.425)	967 (.283)	1481 (.434)	2208 (.647)
84 (2134)								985 (.289)	1598 (.468)	1095 (.321)	1695 (.497)	2532 (.742)
96 (2438)								1114 (.326)	1804 (.529)	1224 (.359)	1921 (.563)	2870 (.841)

Table 5.62
WK², Average for three equal roll length troughing idler rotating parts - steel rolls

WWW.CEMANET.ORG was issued this document (1460) on Nov, 2011 by Chanarom Sritakon Suanlakorn Thailand

Belt Width in (mm)	CEMA Return Idler Class - Average Inertia lbf-in² (kgf-m²)											
	B4	B5	C4	C5	C6	D5	D6	E6	E7	F6	F7	F8
18 (457)	41 (.012)	85 (.025)	42 (.012)	85 (.025)	165 (.048)							
24 (610)	50 (.015)	106 (.031)	51 (.015)	106 (.031)	210 (.062)	106 (.031)	210 (.062)					
30 (762)	61 (.018)	128 (.038)	61 (.018)	128 (.038)	254 (.074)	128 (.038)	254 (.074)					
36 (914)	72 (.021)	152 (.045)	72 (.021)	152 (.045)	312 (.091)	152 (.045)	312 (.091)	419 (.123)	750 (.220)			
42 (1067)	83 (.024)	174 (.051)	83 (.024)	174 (.051)	348 (.102)	174 (.051)	248 (.073)	479 (.140)	857 (.251)			
48 (1219)	94 (.028)	196 (.057)	94 (.028)	196 (.057)	385 (.113)	196 (.057)	385 (.113)	539 (.158)	963 (.282)			
54 (1372)						218 (.064)	429 (.126)	597 (.175)	1070 (.314)			
60 (1524)						234 (.069)	473 (.139)	659 (.193)	1177 (.345)	753 (.221)	1171 (.343)	1760 (.516)
72 (1829)						256 (.075)	513 (.150)	779 (.228)	1391 (.408)	884 (.259)	1376 (.403)	2071 (.607)
84 (2134)								933 (.273)	1581 (.463)	1014 (.297)	1582 (.464)	2382 (.698)
96 (2438)								1074 (.315)	1737 (.509)	1145 (.335)	1790 (.524)	2693 (.789)

Table 5.63
WK², Average for single steel roll return idlers

CAUTION:
Values in this chapter are typical of the maximum values among all CEMA Members' standard products and should be used for general information only. Contact a CEMA Member company for specific values for critical applications, special conditions and certified dimensions for final design.

WWW.CEMANET.ORG has issued this document (14600) on Apr 24, 2015 to Kasem Kasetsart University Sriracha Campus Suanluang , , Thailand

SCOPE Pg 134
INTRODUCTION Pg 134
- CEMA Conveyor Design Evolution
- Belt Conveyor as a Basic Machine
- Tension Based Design
- Tension and Friction Terminology

BASIC AND CEMA HISTORICAL DESIGN METHODS Pg 141
THE CEMA UNIVERSAL DESIGN METHOD Pg 142
- Universal Method Example Conveyor Input Variables
- Energy Related Tensions, $\sum \Delta T_{nEnergy}$
  - Gravity
  - Bulk Material Acceleration
  - Inertia
- Main Resistances, $\sum \Delta T_{nMain}$
  - Load Independent Friction
    - Skirtboard Seal Friction
    - Idler Seal Drag
  - Load Dependent Friction
    - Idler Bearing Losses
    - Belt Cover Indentation
      - Small Sample Indentation Loss Method
      - Large Sample Indentation Loss Method
      - Discussion of Indentation Correction Factors
      - Belt Cover Indentation Loss Case Study
    - Belt on Idler Alignment Friction
      - Installation Misalignment
      - Manufacturing Misalignment
      - Idler Tilt
      - Garland Idler
    - Slider Bed/Impact Cradle
    - Skirtboard Friction
  - Load and Tension Dependent Friction
    - Idler Load Due to Vertical Misalignment
  - Effect of Belt Sag Between Idlers
    - Material Trampling Loss
    - Lift Off Critical Speed
- Point Sources of Tension, $\sum \Delta T_{nPoint}$
  - Pulleys as Passive Point Losses

WWW.CEMANET.ORG has issued this document (1465) on Apr 4, 2013 to Pattaraporn Sittiratpol, Siriluang, , , Thailand

THE CEMA UNIVERSAL DESIGN METHOD (continued)
Belt Cleaners
V-Plows
Belt Discharge Plows
Active Tension Contributions
Driving the Belt
Braking the Belt
TENSION MANAGEMENT Pg 203
Analysis Process
Steady State Running Analysis
Transient Running Analysis
Maximum Belt Tension as a Primary Design Result
Operating Maximum Belt Tension
Temporary Operating Maximum Belt Tension
Starting and Stopping Maximum Tension
Curves
Vertical Curves
Horizontal Curves
Compound Curves
Minimum Design Tensions
Minimum T_2 for Active Pulleys
Belt Sag Between Idlers
TRANSIENT TENSION - SIMPLIFIED APPROACH Pg 210
Calculation of Average Acceleration and Deceleration Forces
Moving Mass
Passive Speed Change
Active Speed Change - Acceleration/Deceleration
Startup and Shutdown
Loading
TRANSIENT TENSIONS - DYNAMIC ANALYSIS Pg 217
Dynamic Modeling
Mathematical Modeling
A Belt Conveyor as an Electromechanical System
Belting and Resistance to Belt Motion
Complete Conveyor Model
Stopping Simulation
Starting Simulation

www.CEMANET.org e-mail:cema@mail.com Licensed to: Mr. Kittipan Sritrakool, Suanluang, , , Thailand Apr 24, 2017 10:12:37 AM

COMPONENT TENSION CHARACTERISTICS Pg 222

- Belt
  - Energy Loss or Resistance
  - Belt Strength
    - Transient Load Safety Factor
    - Splice
  - Belt Modulus/Stiffness
    - Longitudinal Stretch
    - Speed of Tension Change
    - Cross Section Properties
  - Belt Weight
- Idlers
  - Idler Design Drag
    - Idler Lifetime Affects
    - Idler Environmental Contamination
  - Idler Spacing
  - Idler Alignment
  - Tracking
  - Surface Friction
  - Idler Roll Run Out
  - Idler Inertia
- Pulley
  - Torque Transferral
  - Pulley Diameter
  - Lagging
  - Structural Implications: Running vs Transient Loads
  - Pulley Inertia
- Drive Components
  - Torque and Power
  - Drive Inertia Considerations
  - Drives
  - Brakes
  - Backstops
  - Drive System and Control
- Takeup
  - Constant Tension from Automatic Takeups
  - Takeup Tension Deadband

WWW.CEMANET.ORG the issuer of this document (1450) on Apr 24, 2013 to Pattarapom Sakpool, Suanluang... , Thailand

COMPONENT TENSION CHARACTERISTICS (Continued)
- Hysteresis
- Takeup Reaction Time
- Constant Belt Length Fixed Takeup

Loading Point
- Material Entry Geometry
- Receiving Belt Equipment
  - Plugged Chute Condition
- Accessories

CONVEYOR AS A SYSTEM **Pg 238**

Optimization
- Component Implications
- Maximum Belt Tension
  - Active Pulley Locations
  - Minimize Tension at Takeup
  - Tension vs Energy Cost
- Overall Efficiency
  - DIN f
  - Transport Efficiency, f_e

System Interactions
- Component Location
  - Active Pulleys
  - Multiple Pulley Drives
  - Clustered Drives
  - Booster Drives
  - Tail Drives
  - Takeup Location
- Belt Stretch Influences
  - Local Belt Stretch
  - Fixed Takeup - Constant Length Belt
  - Automatic Takeup Response
- Reversing Conveyor
  - Reversing Conveyor Fixed Takeup
  - Reversing Conveyor Automatic Takeup
  - Reversing Conveyor Dual Drive

Transient Behaviors
- High Dynamic Tensions
- Festooning From Low Tensions
- Effect On Material Carried

WWW.CEMANET.ORG has licensed this document (#1142004) on Apr 24, 2017 to Chattarapom Sritrakool, Suanluang, , , Thailand

CONVEYOR AS A SYSTEM (Continued)
Belt Stretch Potential Energy
Drive or Brake Slip
Unexpected Failures
Belt Flap
When Is Dynamic Analysis Required?
DESIGN TOOLS Pg 252
Iterative Process
Software Attributes
EXAMPLE CONVEYOR ANALYSIS Pg 254
1. Operating Requirements
2. Basic Sizing
Belt Width
Belt Speed and Width
Speed on Inclines
3. Idler Selection Initial Estimate
4. Accessory Components
5. Initial Assumptions and Tension Calculations
6. Tension Management
Minimum Tension Checks
Liftoff Speed Check
7. Additional Optimization
8. Transient Conditions
Transient Speed Conditions
Passive Stopping-Drift
Startup
Stopping
Transient Load Design Checks
Empty Case
Only Declines Loaded Case
Declines Empty Case
Initial Example Calculation and Final Iteration
9. Dynamic Analysis
General Conveyor Behavior Utilizing Belt Elastic Properties
Maximum Loads on Components
Stopping with Declines Loaded Only
Starting with Declines Loaded Only
Drive Power
CHAPTER 6 CONCLUSION Pg 267

WWW.CEMANET.ORG has issued this document to Apr 2, 2017 to Puttarapom Sritrakool, Suanluang, , , Thailand

SCOPE

This chapter describes the calculation of the conveying forces and their interactions for use in sizing components and establishing operating limits for belt conveyors transporting bulk materials. The following method represents the CEMA recommendation for the consistent design of belt conveyors for bulk materials for virtually any length and complexity of the design. The design process is iterative to define an acceptable combination of conveyor geometry, components and drive arrangements. The CEMA design procedure, when applied by an experienced conveyor engineer using the actual bulk material and component inputs (rather than tabulated or example data), is capable of predicting the power required to operate a conveyor for a wide range of applications with an accuracy of 110 ± 10% of the actual power.

INTRODUCTION

This Chapter is intended for instructional as well as design purposes to help assure that basic lessons and safe practices in the art of conveyor design are understood and passed on to continuing generations of conveyor designers who might otherwise consider conveyor design as a simple numerical exercise.

CEMA Conveyor Design Evolution

The earliest belt conveyor engineering methods as used in the first half of the 20th century were dependent upon empirical solutions that had been developed by various manufacturers and consultants in this field. A second generation design method was developed by CEMA in the early 1960's based on the design practices and experiences of its member companies. The CEMA method developed in the 1960's changed little until the development of the CEMA Universal Method first described in the 6th edition of this manual in 2005. The belt conveyor engineering analysis, information, and formulas represented developments using observations and tests of actual belt conveyor operations and the best mathematical theory and analysis tools available at the time.

The Universal Method was developed recognizing the advances in many elements of conveyor design and the ability of computers to easily analyze the changing state of belt tension for alternate configurations of very long and complex conveyors. Those familiar with previous editions of this book can find a summary of the familiar CEMA Historical Method approach in Appendix C which was last fully described in the 5th edition and phased out in the 6th edition. The Universal Method treats various losses as discrete and somewhat independent with added functionality as compared to the previous CEMA Historical approach. The CEMA Universal Method was developed based on the technology of CEMA Members and conveyor researchers from around the world. Significant changes to the CEMA Historical method regarding idler resistance, misalignment and belt deformation were verified using field and laboratory measurements.

Number of conveyors	5 fabric and steel cord belts
Range of belt speeds	509 to 965 fpm (2.6 to 4.9 m/s)
Range of belt widths	36 to 72 in (900 to 1800 mm)
Range of belt elastic moduli	80,000 to 795,000 PIW (14 to 139 kN/mm)
Range of troughing angles	35 & 45 deg
Range of conveyor lengths	631 to 9218 ft (192 to 2811 m)
Bulk solids conveyed	Coal, crushed stone, earth
Temperature range	0 to 75 °F (-17 to 24 °C)

Table 6.1
Range of primary variables used to field verify the initial Universal Method during development

Since the publication of the 6th edition many conveyor software developers have converted to the Universal Method and many conveyors of all lengths and capacities have been successfully designed using the Universal Method.

Belt Conveyor as a Basic Machine

A belt conveyor is fundamentally a one dimensional machine and clearly follows physical laws. An understanding of classical mechanics and Newton's Laws of Motion provide a foundation for methods described in the balance of this chapter. While often viewed as a simple robust machine that can be neglected and abused but still function, a conveyor is actually a complex machine where the various component characteristics must be closely matched for efficient and safe operation. A conveyor of only 300 ft (91.5 m) in length can have over 6,000 moving parts and utilize sophisticated controls and monitoring systems.

The particularly relevant concepts from classical physics that apply to conveyor design include:

- Conservation of Energy: The amount of energy remains constant and energy is neither created nor destroyed. Energy can be converted from one form to another (potential energy can be converted to kinetic energy) but the total energy remains fixed.
- Potential Energy: Potential energy is the stored energy by virtue of the mass and position of an object. $PE = M \times g \times H$
- Kinetic Energy: Kinetic energy is the energy of motion. $KE = 1/2 \times M \times V^2$.
- The Concept of Work is defined as a constant force applied over a distance. $W = F \times D$
- Newton's First Law of Motion (Inertia): An object in motion tends to stay in motion until acted upon by another force.
- Newton's Second Law of Motion: The relationship between an object's mass, its acceleration and the applied force is: $F= M \times A$
- Newton's Third Law of Motion (Conservation of Momentum): For every action there is an equal and opposite reaction. $F_1 = F_2$.

Friction, a key component of the work of conveying, is used throughout this chapter as an empirical and mathematical simplification of the energy loss from minute material fractures, molecular movements and adhesive forces. Understanding frictional energy loss is recognized as a primary need in accurate prediction of the conveyor operation under varying conditions. In particular, temperature and speed dependencies are important in the materials commonly used in conveyor component construction. Movements causing conveyed material degradation also consume energy and are treated as friction.
With friction losses distributed along the belt path, belt tensions accumulate overcoming these energy losses. Belt tensions may also vary in traveling waves during belt speed changes since all points and components on the conveyor are not rigidly coupled. These transient belt tensions are frequently ignored by experienced designers when using known components or design practices but the designer should be aware that these transient tension conditions can cause severe problems and unsafe conditions in some cases. Dynamic analysis is used to predict these effects and includes the frictions discussed in this chapter. Dynamic analysis is discussed in this Chapter and is a CEMA recommended best practice for all designs. Common identifiers used in this chapter to describe the effects of the bulk solid and components of a conveyor are Active and Passive. Passive is used to describe the inherent characteristics of the conveyor, the bulk solid and the conveyor components. The term Active is used where the designer intentionally applies energy in a specific manner to affect the conveyor such as with a drive or brake.

www.CEMAnet.org (Conveyor Equipment Manufacturers Association) on Apr 21, 2017 to Gabel Commercial Conveyor Systems, Inc.

Tension Based Design

This chapter describes the prediction of belt force along the material conveyance path from the loading point, or Tail, to the discharge, or Head, and back to the Tail. The Universal Method is principally oriented to the tension or the positive force in the belt. Tension has a direct influence on many design issues involved with conveyor design and the design process:

- The size or rating of many conveyor components, including the belt, are dictated by the belt tension applied to them.
- The energy required to transport the material relates directly to the tension changes in the belt.
- Drives and control components must be designed to provide changes in tension needed to cause and control motion.
- Managing minimum and maximum belt tensions is necessary for reliable and efficient conveyor operation.
- The magnitude of the belt tension affects the belt sag and therefore the material movement.

The forces seen in the belt can be categorized as follows;

- Work done on the belt from external sources
- Inertial forces associated with a change of velocity
- Uniform internal tension

The first category has to do with the energy needed to accelerate the material to belt speed and to lift the load plus the Main Resistances related to conveyor design and components. The second category of belt forces develop when the first is unbalanced by a change of belt speed. The third category of tension is intentionally applied by the designer and is distributed uniformly around the belt circuit as pre-stretch. The latter two categories are treated as tensions that are managed by the designer to assure overall operating success and discussed later in this chapter.

Belt tension varies across the width and, where important, these effects are addressed in other parts of this book. The calculations that follow apply to the total tension across any particular cross section of the belt.

WWW.CEMANET.ORG has issued this document (1420) on Apr 04 2017 to Pattarapom Chitrakool, Songkhla , Thailand

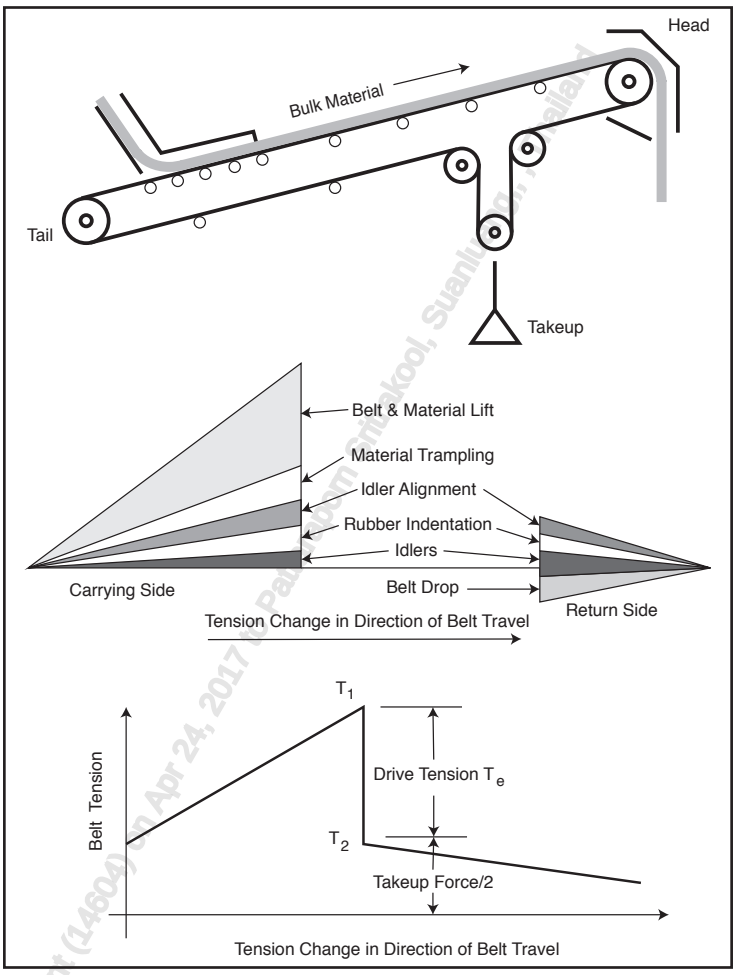

Figure 6.2
Typical conveying resistances and resulting carrying side belt tension diagram

In most conveyor designs it is useful to think of the conveyor as a series of discrete flights or sections. The conveyor path is commonly analyzed as a summation of a sequence of segments or flights with ending tension of the last flight closely matching the starting tension of the first flight. The tension at any point such as the end of a flight or section is the algebraic sum of the tension at the end of the previous flight and of the various tension changes along the current flight. With short flights, the average tension can be approximated with the arithmetic average of the beginning and ending tension values.

The flight length should be kept small to minimize 'averaging' errors in the non linear portions of the calculation. Except for very simple designs, multiple iterations are needed to arrive at a practical and safe design due to the interdependencies between flight tensions and resistances.

The process of analyzing a particular conveyor consists of identifying the conveyance path, the material loading conditions and the conveyor components. Belt motion leads to belt tension change along the carrying run as well as on the return run of the belt. Tensions associated with material energy changes, running friction and component contributions are then quantified and accumulated from a particular point on the belt path progressing in the direction of belt movement. Figure 6.2 illustrates the superposition of resistances and accumulating tension in the direction of belt movement for a basic conveyor.

www.DEMANDOIndustrial.com - Client (14604) on Apr 24, 2017 to Pattaya Technical College, Suanlung, Thailand

The most basic conveyor is a single flight of short length driven in one direction by the head pulley. When the conveyor is horizontal most of the tension required to drive the belt is usually due to the resistance of the rolling components and the movement of the bulk material and belt over the idlers. When the conveyor elevates the bulk material most of the tension required to drive the belt is usually a result the work required to lift the bulk material.

The intent of the Universal Method is to balance accuracy with the analysis effort by breaking the tension calculation into individual energy categories with the ability to understand the importance of each of these categories and manage them with the designers judgment and experience. This also provides a means for optimization and to fine tune or customize the prediction when specific performance data is available and appropriate. The Universal Method is capable of predicting the total tension conservatively with a 1.1 Safety Factor (SF) within ±10%. This requires accurate input data specific to the conveyor being analyzed and implies an experienced conveyor engineer makes well founded adjustments for variations in material properties, manufactured product tolerances, environmental conditions, aging and maintenance effects.

The default design values and Modifying Factors, R_f, provided in this chapter are conservative estimates and should result in slightly over-designed conveyors (SF =1.1). Modifying Factors may be applied by experienced designers to emphasize or de-emphasize individual losses and to test the effect of losses on various operating conditions. When using default values, operational and safety critical components (such as motor and brake sizing) must include additional capacity to be consistent with this conservative approach.

Tension and Friction Terminology

Change in tension is a common theme in this chapter. In the equations that follow, tension and friction are key variables. Tension is indicated as a capital T with a subscript "n" representing the flight or component location or direction. Exceptions are:

- Unless specifically noted, tension, T is assumed to be $+T_x$, tension along the direction of belt travel, and therefore the subscript "x" and the "+" sign is customarily omitted.
- T_1, T_2 and T_e tensions which are adapted from previous editions and, with subscripts, relate to particular drive or brake pulleys. For downhill or regenerative conveyors T_{min} and T_{max} may be used instead of T_1 and T_2.
- For drive pulleys T_e is used interchangeably with ΔT

Terminology convention uses ΔT as the net change in tension from a point source or total of continuous dT/dL loss for a particular flight or pulley. For purposes of analysis positive (+) ΔT (resistances to belt movement uphill slopes and brakes) increase tension and negative (-) ΔT (drives and downhill slopes) reduce tension in the direction of belt motion. Although tension can vary across the belt width, tension as it is used in this Chapter refers to the total force at a particular location along the belt.

The units of force are expressed as lbf (kgf). If a clear distinction is appropriate between force and mass, the mass units will be expressed as lbm (kgm). In cases where necessary or customary Newtons (N) are used for force. Bulk material unit weight is referenced as bulk density throughout this text though the intent in the calculations is usually to use the specific weight. Therefore the symbol γ_m for the weight per unit volume is used rather than the typical symbol ρ for mass per unit volume.

Friction variables provide for the calculation of individual sources of tension can change, usually as a function of other operating variables. The calculations provided below often group several discrete frictions into a subcategory with suitable accuracy for the range of conveyor designs addressed in this manual.

www.EBOOKSTORE.ir Issued this document (1/1/2004) to [illegible]; 2017 to [illegible] from Standard Systems, Thailand

Variable names and subscripts are used which imply the source of energy loss to aid in understanding the functional interactions. The following terms are used in Chapter 6.

Friction Variables
- C = Sliding friction between components
- K = Internal energy loss

Friction Subscripts
- b = Belt related losses
- i = Idler related losses
- m = Bulk material related losses

Direction Subscripts
- x = + in direction of belt travel
- y = in the belt width direction referenced from 0 at belt center line
- z = in the belt thickness direction referenced from the carrying side

Primary Variables

BW	=	Belt width [in (mm)]
F	=	External loads affecting ΔT_n, units as needed [lbf (kgf)]
H	=	Total net vertical lift (+) or drop (-) of all flights [ft (m)]
H_n	=	Vertical lift (+) or drop (-) of flight, n in z direction [ft (m)]
L	=	Total conveyor path length, tail pulley to head pulley [ft (m)]
L_b	=	Total length of the belt [ft (m)]
L_n	=	Length of a particular conveyor segment or flight, n [ft (m)]
Q	=	Bulk material loading rate [tph (mtph)]
S_{in}	=	Spacing of idler sets along flight, n [ft (m)]
V	=	Belt speed [fpm (m/s)]
W	=	Distributed external vertical loads [lbf/ft (kgf/m)]
W_m	=	Distributed gravity load per unit length of bulk material on the belt [lbf/ft (kgf/m)]
W_b	=	Distributed gravity load per unit length of the belt [lbf/ft (kgf/m)]

Primary Variable's Subscripts

a	=	Acceleration related
b	=	Belt related
bc	=	Belt cleaner and accessory related
bi	=	Belt indentation related
dp	=	Discharge plow related
i	=	Idler related, impact related or to describe an initial condition
is	=	Idler seal related
im	=	Idler misalignment related
iW	=	Idler load related
m	=	Bulk material related
mz	=	Bulk materials moving between idlers
pr	=	Pulley bearing related
px	=	Belt bending on pulley related
s	=	Skirtboard related
sb	=	Slider/Impact bed related
ss	=	Skirtboard seal related

WWW.CEMANET.ORG has issued this document (14604) to Kan Kanjanapornsirakool, Suanluang, , , Thailand

Primary Calculation Values

ΔT_n = Tension change in flight or pulley, n [lbf (kgf)]

T_n = Tension at the end of flight or pulley, n [lbf (kgf)]

T_{1n} = Tension in the belt approaching active pulley, n [lbf (kgf)]

T_{2n} = Tension on the belt retreating from active pulley, n [lbf (kgf)]

To account for down hill or regenerative conveyors T_{min} and T_{max} may be used instead of T_1 and T_2.

T_{en} = Tension change at an active pulley = T_{1n} - T_{2n} [lbf (kgf)]

T_{max} = Maximum normal force between the belt and the pulley along the contact arc between the belt and pulley. [lbf (kgf)]

T_{min} = Minimum normal force between the belt and the pulley along the contact arc between the belt and pulley. [lbf (kgf)]

Pulley or Flight Subscripts

n = The subscript, n, refers to one in a series of flights or pulleys making up an entire conveyor, typically referenced from the tail pulley progressing in the direction of belt movement.

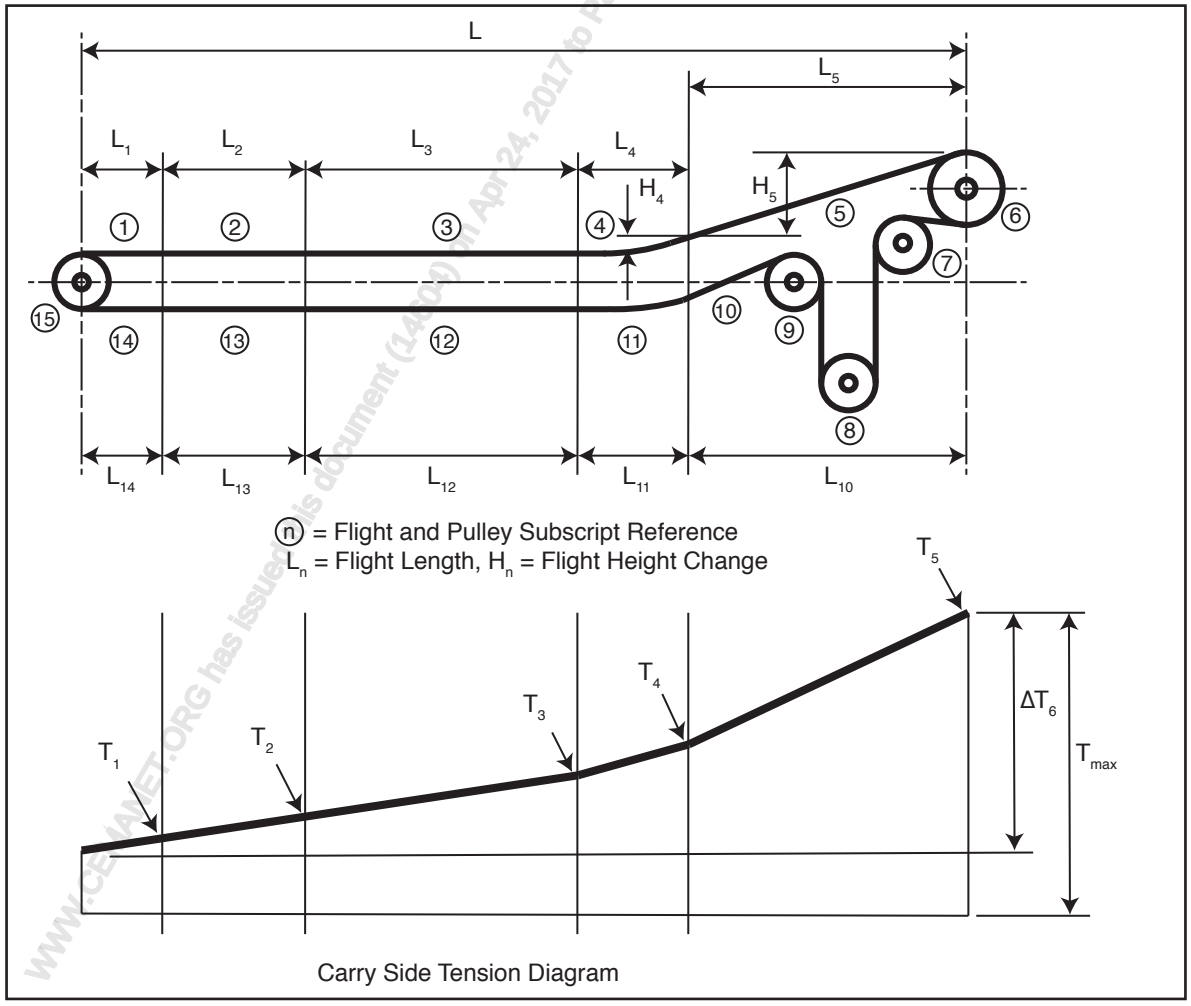

WWW.CEMAT.ORG has issued this document (1402-04) on Apr 24, 2017 to Patcharin Smanpol, Srinakharinwirot University, Thailand

Figure 6.3
Conveyor schematic and carrying side tension diagram illustrating tension terminology

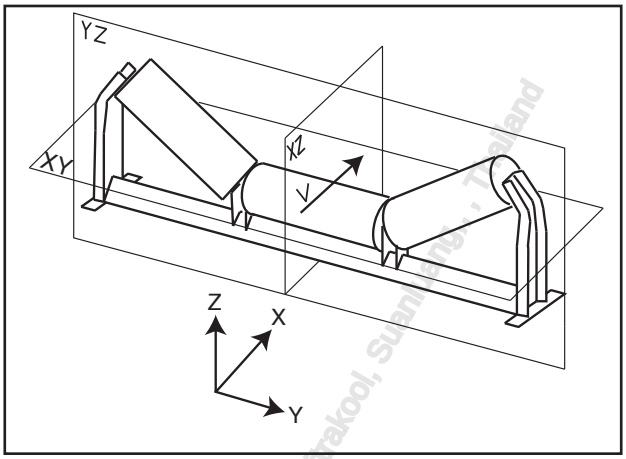

Figure 6.4
Directional and coordinate terminology

BASIC AND CEMA HISTORICAL DESIGN METHODS

A simple design approach was called the Basic Method in the 6th edition and applied to single flight conveyor with a fabric carcass with no curves and a length of 800 ft (244 m) or less in length. The Basic Method assumes that the Main Resistances to belt movement can be grouped into a single friction value, called an equivalent normal friction factor. A typical conservative value for the equivalent normal friction factor is 0.04. The Main Resistances plus the work required to lift the bulk material are used to estimate the required drive tension, T_e.

$$T_e \leq W_m \times H + 0.04 \times (2 \times W_b + W_m) \times L$$

Equation 6.5
T_e, Basic Method equation

The 6th edition of this manual defined a Standard Conveyor as a single flight conveyor with: a fabric carcass of less than 3,000 ft (915 m) in length, single or multiple load points, inclined, declined or horizontal, with or without vertical curves, flat or equal roll troughing idlers, unidirectional or reversing at any speed, single or multiple drives, gravity or automatic take ups and a maximum belt tension of 16,000 lbf (7,264 kgf). The method previously used to analyze Standard Conveyors is called the CEMA Historical Method which was last fully described in the 5th edition of Belt Conveyors for Bulk Materials. The CEMA Historical Method was developed before the extensive use of computers for conveyor calculations and required interpolation from tables for many variables. Developments in longer and more complex conveyor designs and belts made with synthetic fabrics or steel cables have made the tabular and manual application of the Historical Method to accurately determining the overall T_e more problematic.

There are additional design limitations for the CEMA Historical Method listed in the 5th edition of Belt Conveyors for Bulk Materials. In particular, calculations are provided for the required power and the Main Resistance T_e through variables called K_y, K_x and K_t, provided the conveyor is designed with a 3% maximum sag of the belt between the troughing, the return idler spacing is 10 ft (3 m) and the loading of the belt is uniform and continuous. K_y is the belt resistance factor combining several losses. In the Universal Method the elements of K_y are separated for greater accuracy and relevance to a particular design. Data tables provide K_y for carrying idler spacing between 3 ft and 5 ft (0.9 and 1.5 m). K_x is the combined idler resistances factor and K_t is the temperature correction factor. In the CEMA Historical Method equation T_p is the tension due to the belt flexure around pulleys and pulley bearing resistance, T_{am} is the tension resulting from the force to accelerate the material as it is fed onto the belt and T_{ac} is the tension from accessories. See Appendix C.

www.CONVEYOR-ISSUES.NET (1460) 20 Apr 14 10:07 To: Rapon Shrakool, Suphanburi, , Thailand

$$T_e = L \times K_t\left(K_x + K_y \times W_b + 0.015 \times W_b\right) + W_m(L \times K_y + H) + T_p + T_{am} + T_{ac}$$

Equation 6.6
T_e, CEMA Historical Method equation

THE CEMA UNIVERSAL DESIGN METHOD

The Universal Method is the CEMA method described for the first time in the 6th edition of Belt Conveyors for Bulk Materials. Previous design approaches were limited in the length and complexity of the conveyors that could be accurately designed and relied heavily on look up tables, interpolation and broad assumptions. The Universal Method applies primarily to steady state or constant speed operation. However, it can also be used to predict the changing friction as the belt speed changes uniformly during start up or shut down. The role of mass or inertia is considered independent of friction even though they contribute to dynamic changes in tension. The uniformly slow change in motion is referred to as static analysis.

The Universal Method of conveyor determining belt tension can be applied to:

- A conveyor of any length
- Single or multiple freely flowing load points
- Combinations of inclined, declined and/or horizontal flights with horizontal or vertical curves
- A belt with a fabric carcass or steel cord belt
- Any conveyor profile
- Unidirectional or reversing
- Single or multiple drives
- Fixed or automatic takeups

The Universal Method has benefits due to a much broader scope than the Basic and CEMA Historical methods. The remainder of this section describes calculations applicable to all conveyors without limit as to length or profile. This Universal Method is based on an understanding of the characteristics of the major energy loss sources applied to standard components and constructions and with application parameters applicable to normal limits as to speed and tension.

The Universal Method provides design parameters and equations to individually quantify each energy loss category and to simplify the calculation of tension loss. The following list summarizes the range of components and constructions directly usable with the equations provided in this Chapter.

- CEMA flat, 20, 35 and 45 degree equal length three roll idlers
- 1500 fpm (7.5 m/s) maximum belt speed
- Operating temperatures > -25°F < 120°F (> -31˚C < 49˚C)
- Various belt cover materials
- Multiple fabric belt constructions with equal stiffness plies
- Steel cable belts
- Maximum belt width = 96 in (2400 mm)
- Maximum Idler spacing = 10 ft (3 m)
- Free flowing materials; maximum angle of repose of 45 degrees

Note:
Refer to Component Tension Characteristics section of this chapter, Appendix C or contact a CEMA Member to extend or extrapolate beyond these limits.

www.BELTING.gr is issued this copy (1604) on Apr 24 2021 to Puttarapon Sitthikan (Siam Eng., , Thailand)

This Universal Method sums various sources of loss for the total resistance to movement and allows for addressing individual flights (ref subscript 'n') as needed for long complicated conveyors. The science of mathematically modeling these losses is constantly being refined and improved. The significant changes between the 6th and the 7th edition's Chapter 6 equations are:

6th Edition Equation or Figure #	7th Edition Equation or Figure #	Description of Change
N/A	N/A	Equations formatted wherever possible to use either imperial or metric values. Dual unit format used throughout.
6.18	6.28	K_{iT}, Temperature correction factor for idler seal drag: Revised for lower temperatures.
6.27	6.42 & 6.57	$K_{biR\text{-}L}$ and $K_{bir\text{-}S}$, Belt cover indentation loss: Added the large sample methodology. Improved load distribution factor c_{wd}. Expanded calculation to include strain magnitude and distribution correction. Added the effect of steel cable belt and expanded rubber data base. The default rubber in the 7th edition is similar to the rubber used in the 6th edition.
N/A	6.67-6.80	Revised Idler misalignment terminology and defaults. Added idler misalignment measurement using triangulation.
6.43	6.93	W_{mzn}, Trampling loss: Calculation limited to a maximum of 4% sag
6.49	6.99	V_{cn}, Critical liftoff speed: "C" constants revised to reduce sensitivity

Table 6.7
7th edition significant changes in equations from the 6th edition

This section quantifies the tension changes at each flight while the discussion of Tension Management below addresses how they all accumulate appropriately into a total conveyor. In summary, the calculation and the text that follows describe the tension added at each flight as follows:

$$\Delta T_n = \sum_n \Delta T_{nEnergy} + \sum_n \Delta T_{nMain} + \sum_n \Delta T_{nPoint}$$

Equation 6.8
ΔT_n, Universal Method equation

Changes in tension described as Energy components are those related to loading the bulk solid onto the belt and lifting or lowering the bulk solid. Main Resistances are continuous resistances that will have the same value regardless of the direction of belt travel but always retard motion. Point sources of tension are those related to various components that, even though they add or cause a loss of tension over a finite length, the length is small compared to the overall length of the conveyor and they can be analyzed as discrete sources of tension. Pulleys and accessories such as belt cleaners and plows are the primary sources of Point changes in tensions.

$$\sum \Delta T_{Energy\ n} = \Delta T_{Hn} + \Delta T_{amn}$$
$$\sum \Delta T_{Main\ n} = \Delta T_{ssn} + \Delta T_{isn} + \Delta T_{iWn} + \Delta T_{bin} + \Delta T_{mn} + \Delta T_{sbn} + \Delta T_{sn} + \Delta T_{mzn}$$
$$\sum \Delta T_{Point\ n} = \Delta T_{pxn} + \Delta T_{prn} + \Delta T_{bcn}$$

Equation 6.9
$\sum\Delta T$, Components of the Universal Method equation

WWW.CEMANET.ORG Learning Management System - This document is licensed to [illegible] on Apr 24, 2014 - Powered by Checkout - Bangkok, Thailand

Where:

	The tension in flight or pulley, n, with units of lbf or kgf
	for each of the comonents in Equation 6.9
ΔT_n	= Total change in belt tension to cause steady belt speed
ΔT_{Hn}	= Change in belt tension to lift or lower the material and belt
ΔT_{amn}	= Tension added in loading to continuously accelerate material to belt speed
ΔT_{ssn}	= Tension change due to the belt sliding on skirtboard seal
ΔT_{isn}	= Change in tension from idler seal friction
ΔT_{iWn}	= Change in tension from idler load friction
ΔT_{bin}	= Tension increase from visco-elastic deformation of belt
ΔT_{mn}	= Tension loss from idler misalignment
ΔT_{sbn}	= Drag due to impact cradles/slider beds
ΔT_{sn}	= Tension change due to bulk materials sliding on skirtboards
ΔT_{mn}	= Tension change due to bulk materials moving between the idlers
ΔT_{pxn}	= Tension change due to belt bending on the pulley
ΔT_{prn}	= Tension change due to pulley bearings
ΔT_{bcn}	= Tension added due to belt cleaners and plows
ΔT_{dpn}	= Tension added due to discharge plow
Where ΔT_n applies to the effect in flight or pulley, n, with units of lbf or kgf	

Note:
Equations are formatted, whenever possible, in fundamental engineering terms. This approach accommodates user preferences for units. Examples use dimensional values but rounding of input variable values can create slight differences in the results between what is shown in the text and those obtained by manual working of the examples. Final flight tension values are typically rounded to whole numbers.

The various ΔT contributions are described individually in this chapter to be applied to each section or flight "n". When pulleys are considered as separate flights in series with the carrying and return flights, the other sources of resistance are set to zero for the pulley flights. The relative importance of the various tension elements varies widely but none should be ignored as they may have very significant contributions in particular conveyor designs.

The default values and calculations provided in the Universal Method are conservative with the intent that the use of these equations produces a conservative result. Most equations and values include additional Modifying Factors described as the variable, R_{rxx}, for each of the loss categories to allow an experienced designer to fine tune the design and address operational and safety critical components such as brake sizing, with downhill flights and issues peculiar to a specific application.

The minimum and maximum R_{rxx} values can be used to investigate the effect of one calculation on the total tension. For example on a relatively short horizontal conveyor belt cleaner drag could have a significant effect on the total power needed and the effect of the maximum R_{rxx} should be investigated. In other cases, such as regenerative conveyor flights, the minimum R_{rxx} values must be used to prevent unsafe designs. An experienced CEMA conveyor engineer, utilizing values and design factors that are known to be representative of the application being designed, can use the Universal Method to produce tension results

www.conveyorsandbulk.com (14604) on Apr 27 2017 to Wirapom Smakool, Suranaree, Thailand

that represent the actual tensions required to operate the conveyor. An experienced conveyor engineer can then consider applying Modifying Factor, R_r to the final power calculation to reflect a recommended design.

R_{rxx} Modifying Factors are summarized in Table 6.10. The R_{rxx} values provide with each loss category with exceptions or specific concerns noted when they apply. It is important to coordinate the use of Modifying Factors in all sections of the Universal Method power calculations.

Modifying Factor	Ref. Equation		Description	Min	Default	Max
R_{rss}	6.21	ΔT_{ssn}	Skirtboard seal drag	0.00	1.00	2.00
R_{ris}	6.25	ΔT_{isn}	Idler seal resistance	0.20	1.00	1.00
R_{riV}	6.25	ΔT_{isn}	Idler seal speed dependent resistance	0.00	1.00	1.00
R_{riW}	6.33	ΔT_{iWn}	Idler load function	0.67	1.00	1.00
R_{rbi}	6.38 & 6.60	ΔT_{bin}	Viscoelastic belt deformation	0.67	1.00	1.00
R_{rim}	6.67	ΔT_{imn}	Idler misalignment losses	0.67	1.00	1.20
R_{rmg}	6.82	ΔT_{gmn}	Garland Idler resistance	0.80	1.00	1.20
R_{rsb}	6.83	ΔT_{sbn}	Slider bed resistance	0.60	1.00	1.50
R_{rs}	6.85	ΔT_{sn}	Skirtboard bulk solid flow resistance	0.50	1.00	1.00
R_{rmz}	6.93	ΔT_{mzn}	Bulk material trampling loss	0.67	1.00	1.00
R_{rp}	6.112	ΔT_{pn}	Pulley resistance	0.50	1.00	1.00
R_{rbc}	6.107	ΔT_{bcn}	Belt cleaner resistance	0.00	1.00	2.00
R_{rdp}	6.110	ΔT_{dpn}	Discharge plow resistance	0.60	1.00	1.00
R_{rpf}	6.112	ΔT_{emn}	Active pulley belt resistance	0.80	1.00	1.00

[1] R_{rxx} Modifying Factors are dimensionless multipliers used in calculating these functions

[2] Whenever possible use the manufacturer's data for equation inputs and set $R_{rxx} = 1.0$.

Table 6.10
Modifying Factors for applying conveyor designer weighting for individual tension calculations

WWW.CEMANET.ORG has issued this document (2014) on 4/4/2017 to Prasopchai Pantachot, Saraburi, Thailand

Flight "n"	Description (2)	Flight Length "L_n" ft (m)	Cumulative Length ft (m)	Lift "H_n" ft (m)	Lift Angle "Θ_n" (deg)	Idler Spacing "S_{in}" ft (m)	Accessories
1	Loading (1)	15 (4.58)	15 (4.58)	0.0	0.0	2.0 (0.61)	15 ft of skirt seal per side
2	Carrying (2)	500 (152.5)	515 (157.1)	0.0	0.0	5.0 (1.53)	
3	Carrying (2)	500 (152.5)	1015 (309.6)	0.0	0.0	5.0 (1.53)	
4	Carrying (2)	500 (152.5)	1515 (462.1)	0.0	0.0	5.0 (1.53)	
5	Carrying (2)	250 (76.3)	1765 (538.3)	52.9 (16.1)	10.0	5.0 (1.53)	
6	Carrying (2)	250 (76.3)	2015 (614.6)	52.9 (16.1)	10.0	5.0 (1.53)	
7	Carrying (2)	250 (76.3)	2265 (690.8)	- 52.9 (-16.1)	-10.0	5.0 (1.53)	
8	Carrying (2)	250 (76.3)	2515 (767.1)	- 52.9 (-16.1)	-10.0	5.0 (1.53)	
9	Active Head Pulley						2 belt cleaners
10	Return	-250 (-76.3)		-52.9 (-16.1)	10.0	10.0 (3.05)	
11	Return	-250 (-76.3)		-52.9 (-16.1)	10.0	10.0 (3.05)	
12	Return	-250 (-76.3)		52.9 (16.1)	-10.0	10.0 (3.05)	
13	Return	-250 (-76.3)		52.9 (16.1)	-10.0	10.0 (3.05)	
14	Return	-500 (-152.5)		0.0	0.0	10.0 (3.05)	
15	Return	-500 (-152.5)		0.0	0.0	10.0 (3.05)	
16	Return	-500 (-152.5)		0.0	0.0	10.0 (3.05)	
17	Return	-15 (-4.58)		0.0	0.0	10.0 (3.05)	1 V-Plow
18	Bend Pulley						
19	Gravity Takeup Pulley						
20	Bend Pulley						
21	Tail Pulley						

(1) Load to be accelerated in flight n=1 is 2500 tph (2267.2 mtph)
(2) The conveyor is considered 100% loaded in all carrying flights

Table 6.11
Example conveyor flight data

WWW.CEMANET.ORG has issued this document (4604) on Apr 24, 2017 to Patcharin Smitdech, Siam Cement Group, , Thailand.

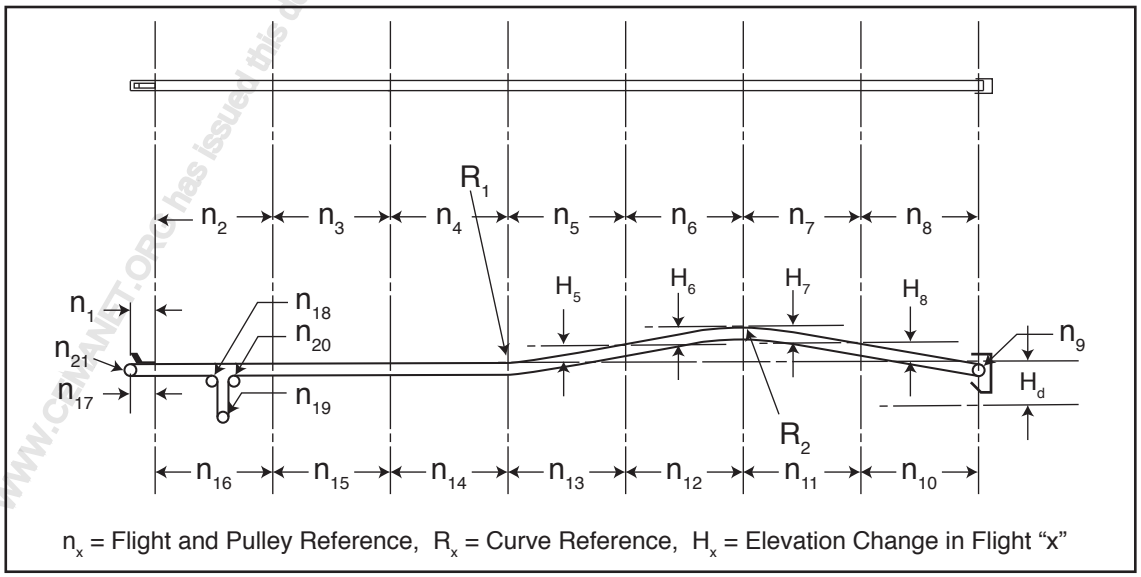

n_x = Flight and Pulley Reference, R_x = Curve Reference, H_x = Elevation Change in Flight "x"

Figure 6.12
Universal Method example conveyor flight nomenclature

Universal Method Example Conveyor Input Variables

Throughout the rest of this chapter the various equations used to illustrate changes in tension are based on Figure 6.12 using the following inputs for example calculations. The bulk material is a generic crushed stone.

Variable	Value	Units	Note
BW	48 (1219)	in (mm)	Belt width
Q	2,500 (2,267.5)	tph (mtph)	Design capacity
L	2,515 (767.1)	ft (m)	Overall path length
γ_m	90.0 (1,441.6)	lbf/ft^3 (kgf/m^3)	Bulk density
T_F	15 to 100 (-3.8 to 37.8)	˚F (˚C)	Ambient temperature range
D_L	4.0 (101.6)	in (mm)	Maximum lump size of bulk material
	90	%	Fines content of bulk material
Φ_r	33	deg	Angle of repose
Φ_s	20	deg	Surcharge angle
PIW	900 (157.5)	lbf/in (N/mm)	3-ply 900 PIW Belt Rating
E_b	70,000 (12,250)	lbf/in (N/mm)	Belt Modulus (fabric belt)
t_b	1.125 (28.6)	in (mm)	Total belt thickness
h_b	3/8" (9.5)	in (mm)	Belt bottom cover thickness
h_t	½"(12.7)	in (mm)	Belt top cover thickness
W_b	26.3 (39.1)	lbf/ft (kgf/m)	Weight of belt per unit length
D_r	6.0 (152)	in (mm)	CEMA D6 35 degree three roll troughing carrying Idlers. CEMA D6 return idlers
S_i	5.0 (1.53)	ft (m)	Carrying idler spacing
S_{iR}	10.0 (3.05)	ft (m)	Return idler spacing
S_{iL}	2.0 (0.61)	ft (m)	Loading idler spacing

Table 6.13
Universal Method example conveyor variables and final values

WWW.CEMANET.ORG has issued this document (2460) on Apr 24 2014 to Patcharin Intarakumthornchai, Thailand

Energy Related Tensions, $\sum \Delta T_{nEnergy}$

Gravity

A specific and often major source of belt tension is the work involved with inclined or declined conveyance paths due to the potential energy change in the bulk material and belt for a height change H_n. The tension is sensitive to the direction of travel so that with uphill movement the tension increases and a downhill or negative slope angle causes reduction in this component of tension along the conveyance direction as gravity pulls the conveyor down the slope.

Gravity or potential energy is considered to have a continuous effect on tension along the length of any slope from earth horizontal. It should be observed that the weight of the carry side belt and the return side belt cancel each other out from the perspective of total conveyor T_e but need to be included in circuit calculations to identify the local tension at any point.

$$\Delta T_{Hn} = H_n \times (W_b + W_m)$$

Equation 6.14
ΔT_{Hn}, Flight tension change due to elevate or lower, ($-H_n$), the belt and the load

Where:

ΔT_{Hn} = Tension change in flight "n" due to lift
H_n = Elevation change in flight "n"
W_b = Weight of the belt per unit length from manufacturer
W_m = Weight of the bulk material on the belt per unit length

$$T_{H5} = H_5 \times (W_b + W_m) = 44.0 \text{ ft} \times (26.3 \frac{\text{lbf}}{\text{ft}} + 138.9 \frac{\text{lbf}}{\text{ft}}) = 7{,}268.8 \text{ lbf (3,304 kgf)}$$

Figure 6.15
Example calculation of tension needed to elevate material in flight 5

For flights including belt curves in a vertical plane (See Chapter 9) use H_n as the net change in elevation for that entire flight.

Bulk Material Acceleration

Work or kinetic energy must be provided to the bulk material to accelerate it to match the speed of the belt. The accelerating force is provided by the belt through an increase in tension at the loading point(s) in the direction of belt movement. Using the amount of Kinetic Energy added to the bulk material allows the calculation of belt tension effects without concern for the acceleration rate or the dynamics involved with impact, although these can be important issues for belt and chute wear and material degradation.

www.CEMAFORG.We issued this document (1486) 10 April 2017 to Stuart Smith Suandok Thailand

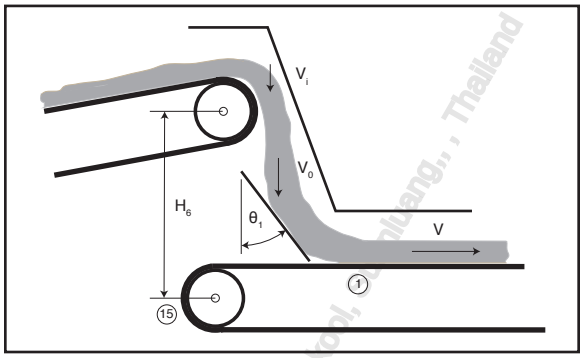

Figure 6.16
Accelerating bulk material to belt speed

This accelerating force must be added whenever the material leaves contact with the belt and reengages the belt at a trajectory different than the belt direction. For instance, in addition to transfer from one conveyor to another, this comes into play with trippers along the belt carrying path. Common practice assumes $\theta_i = 0$, initial velocity of falling stream, V_i, = 0 and there is no friction retarding motion as a worst case condition. Note that a negative θ_i will require more tension, T_{amn}. These assumptions have a minor impact on most conveyors of any significant length so this approximation is usually reasonable. See Chapter 12 for detail on the calculation of V_0.

$$V_0 = V_i + \sqrt{2 \times g \times H_d}$$

Equation 6.17
V_0, Velocity of falling bulk material stream

$$\Delta T_{amn} = \frac{Q}{g} \times \left(V - V_0 \times \sin(\theta_1)\right)$$

Equation 6.18
ΔT_{amn}, Tension needed to accelerate bulk material to receiving belt speed

Where:

V_i	= Initial velocity of the falling stream of bulk material at H = 0
V_0	= Effective velocity of a falling stream of bulk material
g	= Acceleration due to gravity
H_d	= Vertical distance that the bulk material falls
ΔT_{amn}	= Tension needed to accelerate falling stream of bulk material to belt speed
Q	= Rate of flow of bulk solids
θ_i	= Chute angle in relation to the belt YZ plane

For example, with material in free fall for 5 ft (1.5 m) until it hits a chute wall inclined at 20 degrees to the vertical. Flight 1 of Figure 6.12.

WWW.CEMANET.ORG has issued this document (14604) on Apr 24 2020 to [illegible]

H_d = 5.0 ft θ_1 = 20.0 deg. Q = 2500 tph V = 600 fpm

$$V_0 = \sqrt{2 \times g \times H_d} = \sqrt{2 \times 32.2 \frac{ft}{s^2} \times 5\ ft} = 17.9 \frac{ft}{s}$$

$$\Delta T_{am1} = \frac{Q}{g} \times (V - V_0 \times \sin(\theta_1)) = \left[\frac{2500 \frac{t}{h} \times 2000 \frac{lb}{t}}{3600 \frac{s}{h}} \over 32.2 \frac{ft}{s^2} \right] \times \left[\left(600 \frac{ft}{min} \right) \left(\frac{s}{60 \frac{s}{min}} \right) - 17.9 \frac{ft}{s} \times (0.3420) \right]$$

$$\Delta T_{am1} = 43.13 \frac{lbf\text{-}s}{ft} \times 3.88 \frac{ft}{s} = 167\ lbf\ (76\ kgf)$$

Figure 6.19
Example calculation of tension needed to accelerate bulk material onto receiving belt

www.BULKSOLIDS.com.au Bulk Solids Handling Apr 28 2011 to Pasarapom Sritrakool, Bangkok, , Thailand

Inertia

A belt conveyor, because of its long distributed mass, is considered a high inertia machine. This means that high forces or relatively long times are needed to cause change in velocity. This effect is important to include when predicting the expected operation of the conveyor and the proper selection of its components. The forces that create the changes in velocity are not considered steady state and are not part of this section but are discussed later in the chapter.

Main Resistances $\sum \Delta T_{nMain}$

Continuous, bidirectional resistances to belt movement are often categorized as the Main Resistances of conveyors. For long, flat conveyors where potential energy effects are non-existent and secondary point sources become relatively less important, the Main Resistances are the primary resistances to belt and material movement. In general, these losses will have the same magnitude independent of the direction of travel but will always retard motion. They are described here as elements of Passive friction for calculation purpose though the energy loss mechanisms are not all classic sliding Coulomb friction. They are considered as continuous losses distributed along the conveyor or individual flights and calculations are on a unit length basis though most loss reactions are transmitted through each idler.

The basic calculations described below provide safe design values by using conservative material and component characteristics in the calculations so the actual resistances may be significantly lower. During acceleration and when conveyors include significant downhill portions, safe design requires assuring controlled speed control and therefore must include the investigation of the possibility of resistances at the lower levels of the predicted values. A Modifying Factor or multiplier ratio, R_{rxx}, is provided with the friction calculations to yield the low or high end of the expected value for each ΔT contribution. These loss equations should not be used independently but simultaneously iterating with maximum or minimum R_{rxx} Modifying Factors as appropriate for all flights and all resistances as described in the Tension Management section of this chapter.

Load Independent Friction

Though energy loss and resistance to movement invariably involve applied forces, some of these are not associated with the weight of the conveyed bulk material or the belt but from forces internal to the conveyor or component design. These losses contribute to conveyor Main Resistance simply from belt movement. Skirtboard seal friction and idler seal drag are treated as load independent losses.

Skirtboard Seal Friction

A skirt seal which rides on the belt is commonly used to contain dust and small particles. The calculation predicts the resistance as the product of a friction factor and the unit normal force between the moving belt and the seal without influence from the material loading. The values are provided below apply to a generic rubber edge seal as shown in Figure 6.20 for flight "n" that is sealed along it's full length on both sides.

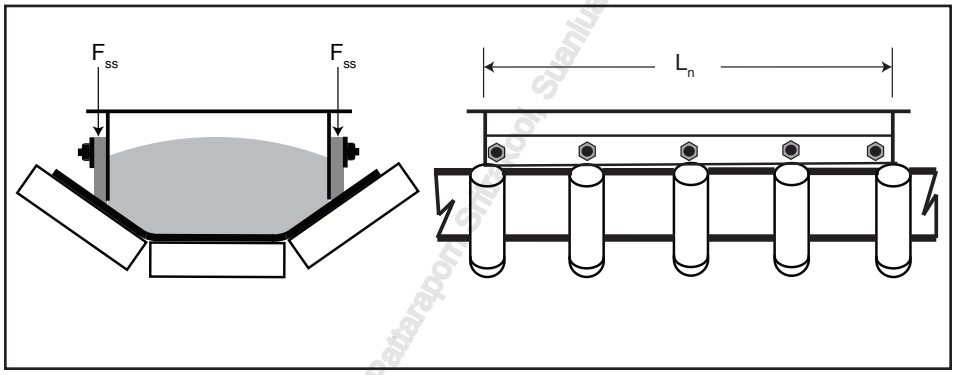

Figure 6.20
Skirtboard seal drag on conveyor belt

$$\Delta T_{ssn} = C_{ss} \times L_n \times R_{rss}$$

Equation 6.21
ΔT_{ssn}, Calculation of skirtboard seal drag

Where:

ΔT_{ssn} = Tension change due to belt sliding on skirtboard sealed flight, "n"
$C_{ss} = 2 \times m_{ss} \times F_{ss} \times R_{rss}$ Frictional resistance to the belt movement
μ_{ss} = Sliding friction coefficient between belt and seal rubber (dimensionless)
F_{ss} = Effective normal force between belt and seal
R_{rss} = Modifying Factor (dimensionless)

$L_1 = 15.0$ ft $\quad \mu_{ss} = 1.0 \quad F_{ss} = 3.0$ lbf / ft $\quad R_{rss} = 1.0$

$$C_{ss} = 2 \times 1.0 \times 3.0 \ \frac{\text{lbf}}{\text{ft}} \times 1.0 = 6.0 \text{ lbf/ft}$$

$$\Delta T_{ss1} = C_{ss} \times L_1 \times R_{rss} = 6.0 \ \frac{\text{lbf}}{\text{ft}} \times 15.0 \text{ ft} \times 1.0 = 90.0 \text{ lbf } (40.9 \text{ kgf})$$

Figure 6.22
ΔT_{ss1}, Skirtboard seal example calculation

Various specialty sealing products are available to perform this function with varying performance, life and drag. Typical values for design are $\mu_{ss} = 1.0$ and $F_{ss} = 3.0$ lbf/ft (4.5 kgf/m) of skirt seal for conventional slab rubber skirt board seals shown in Figure 6.20. C_{ss} is calculated by multiplying by a factor of 2 because it is assumed that both sides of the belt have a skirt seal. Therefore an estimate of 6.0 lbf/ft (9.0

WWW.CEMANET.OTG has issued this document (14604) on Apr 24 2017 to Pattaraporn Sirikaew, Suanluang, , Thailand

kgf/m) of conveyor is a typical value for ΔT_{ssn}. These issues are discussed in more detail in Chapter 11 with values of F_{ss} and μ for various materials and skirt seal configurations.

R_{rss} = 0.0 for the case when the seal is completely worn, though this operating condition should be checked in all cases, but is rarely be used for initial calculations. Skirtboard seal resistance can be a major loss contribution on short belts or belts that are skirted the full length. If the flight length is greater than the skirt length use the actual skirt length. It is more common that the seal, depending upon its design, can be over adjusted and for this reason R_{rss} = 2.0 should be used for conservative results.

Idler Seal Drag

The support idlers resist rotation and belt movement by mechanisms internal to the idler roll. Idler seal and lubricant friction are independent of load and this section addresses their contribution to drag. Idler bearing related losses are covered later in the load dependent section.

CEMA Member standard products were independently tested and the published values represent safe steady state running idler seal drag for design of most conveyors, independent of the member product selected. Special cases exist and are discussed below.

Idler seal drag is defined as a torsional moment restraining the shaft with an equal and opposite shell force acting on the roll radii moment arm, reference Figure 6.23. Published values represent the maximum expected steady state mean seal drag of a population of new rolls that have been broken in. CEMA tests have shown seal drag is dependent upon roll speed, component sizes, design paradigms, ambient temperature and roll condition.

The method provided below provides a simple estimate for the resistance provided by the idler seal. The actual resistance varies widely so that the use of actual values obtained from a CEMA Member is required for accurate predictions.

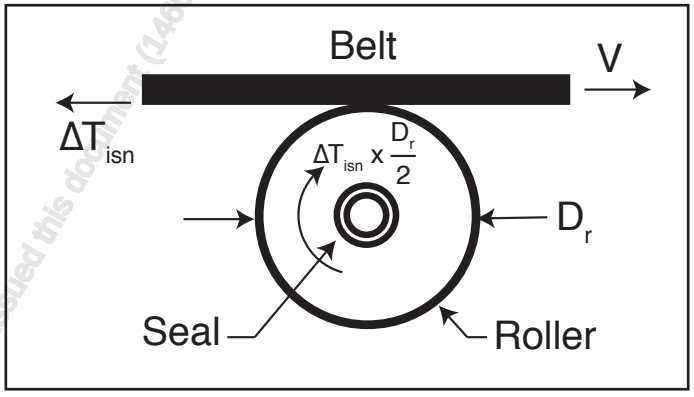

Figure 6.23
ΔT_{isn}, Idler belt line reaction for single roll

Torsional moments are published as linear curve fit coefficients in a per roll format as shown in Figure 6.24. Kis is the moment at 500 rpm and Kiv is the slope to estimate other speeds. Components become heavier with increases in the CEMA load series and published drags increase accordingly, as shown in Table 6.19. Equation 6.25 gives the drag per roll as a force at the shell/belt interface. Equation 6.26 can then be used to calculate the total drag of each roll type in the flight.

WWW.CEMANET.ORG has issued this document (14504) on Sep 24, 2014 to Peter Lapin Sriracha, Suanchang, Thailand

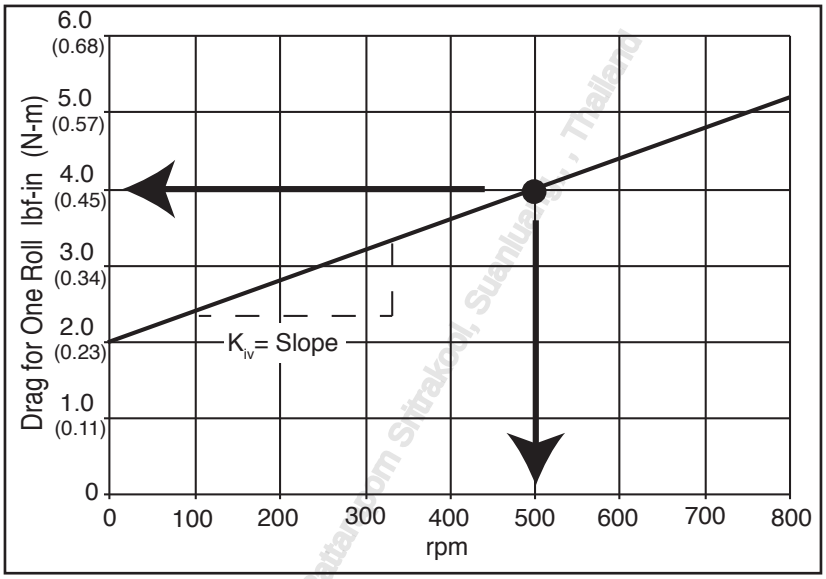

Figure 6.24
Drag from a single idler roll

$$\Delta T_{ir} = \left[K_{iv} \times R_{riv} \times (N_i - 500\ \text{rpm}) + K_{is} \times R_{is}\right] \times \frac{2}{D_r}$$

Equation 6.25
ΔT_{ir}, Drag from a single idler roll

$$\Delta T_{isn} = K_{iT} \times \Delta T_{ir} \times \frac{n_r}{S_{in}} \times L_n$$

Equation 6.26
ΔT_{isn}, Idler seal friction

WWW.CEMANET.ORG has issued this document (1460) to Apr 24, 201 to Pattarakom Sirirakool, Suanluang , Thailand

Where:

ΔT_{ir} = Change in tension for single roll from idler seal resistance lbf (N)
ΔT_{isn} = Change in tension in flight "n" from idler seal resistance lbf (N)
D_r = Idler roll diameter in (mm)
K_{iV} = Slope of torsional speed curve per roll $\frac{\text{lbf-in}}{\text{rpm}}$ $\left(\frac{\text{N-m}}{\text{rpm}}\right)$ Table 6.29
K_{is} = Seal torsional resistance per roll at 500 rpm lbf-in (N-m) Table 6.29
K_{iT} = Temperature correction factor (dimensionless) Figure 6.27
K_{iTb} = Curve fit constants for temperature correction $[R^{-1}(K^{-1})]$
Note: R = Rankine, K = Kelvin $[T_R = °F + 459.67$ $(T_K = °C + 273.15$ °K)]
L_n = Length of flight "n" ft (m)
n_r = Number of rolls per idler set
N_i = Actual rpm of idler based on diameter and belt speed rpm
R_{ris} = Modifying Factor for seal torsional resistance (dimensionless)
R_{riV} = Modifying Factor for torsional speed effect (dimensionless)
S_{in} = Carrying or return idler spacing in flight "n"

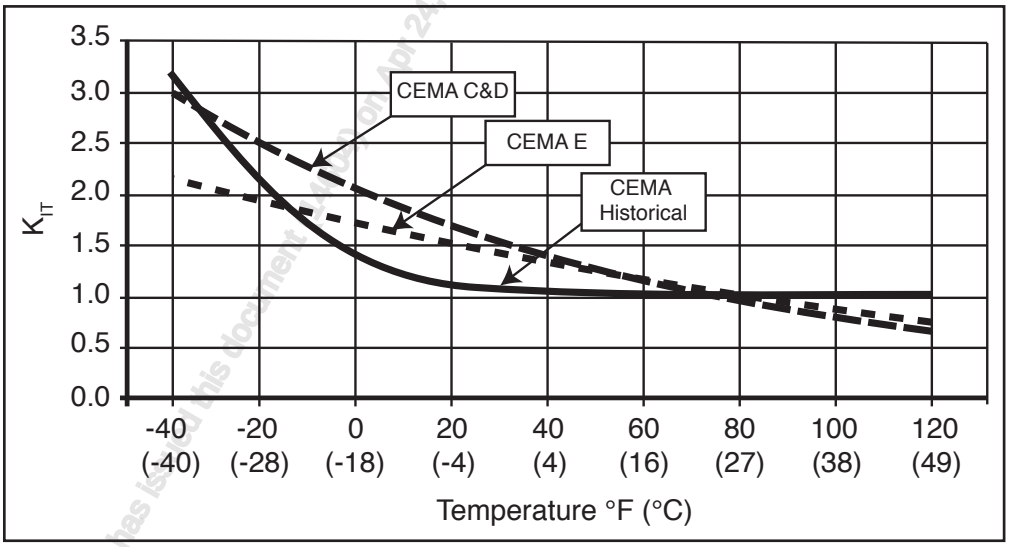

Figure 6.27
K_{iT}, Temperature correction factor curve for CEMA C, D and E idler rolls

Ambient temperature has a significant impact on idler seal drag and it is accounted for by the multiplying factor, K_{it}. CEMA Member products have been independently tested and the equations published reflect seal drag change with temperature. This comparison of results with the CEMA Historical correction is graphically shown in Figure 6.27. CEMA published K_{it} values should only be used with published K_{is} and K_{iv} values. Testing shows designs can vary widely and using design specific K_{is} or K_{iv} values with the K_{it} calculated by equations in Figure 6.32 can misrepresent true performance.

IHS COMPLETE - IHS has issued this document on Apr 24, 2017 to PRAPAIPOM SMARTBOY, Thailand

$$K_{iT} = K_{iTa} \times e^{K_{iTb} \times T_x}$$

Figure 6.28
K_{iT}, Temperature correction factor for idler seal resistance

CEMA Idler Series	K_{is} lbf-in (N-mm)	K_{iv} lbf-in/rpm (N-mm/rpm)	K_{iTa}	K_{iTb}
			R^{-1} (K^{-1})	
B	3.00 (339)	0.004 (0.452)	198	-0.0100 (-0.0180)
C	3.25 (367)	0.004 (0.452)	198	-0.0100 (-0.0180)
D	4.00 (452)	0.004 (0.452)	198	-0.0100 (-0.0180)
E	7.25 (819)	0.003 (0.339)	36	-0.0067 (-0121)
These four "K" constants provide an accurate estimate of maximum average seal drag to anticipate from CEMA Member company products. The R_{ris} and R_{riV} Modifying Factors give insight into the range of differences between CEMA Member company designs. The use of the actual values is justified in some cases. When using actual values it is important to have all six coefficients specific to the roller.				

Table 6.29
K, Constants for idler seal torsional resistance

CEMA Member companies have different seal design philosophies and significant drag variances exist. Common variables are geometry, materials, contact seals and grease: viscosity, amount and location. These affect seal performance and drag, generally with an inverse trend. Drag range adjustment factors provide a means to include this when appropriate. All conveyors should be analyzed with R_{riv} and R_{ris} =1.0, which gives power estimates at the upper range of member products. In the following special cases, an additional analysis is recommended using R_{riv} = 0.0 and R_{ris} = 0.4, which gives power estimates at the lower range of member products.

- Conveyors where minimal power is from elevation change with long length and thousands of rolls. (i.e. flat overland conveyors)
- Downhill conveyors where lower seal drag could create a regenerative situation.
- Conveyors with significant horizontal curves, where tension control at specific locations may be of benefit.

These values apply to the range of CEMA products and specific R_{riv} and R_{ris} values should be applied when using actual drag values for a particular design.

WWW.CEMANET.ORG has issued this document (14-07) on Apr 25, 2017 to Pattarapong Thongsang, Thailand

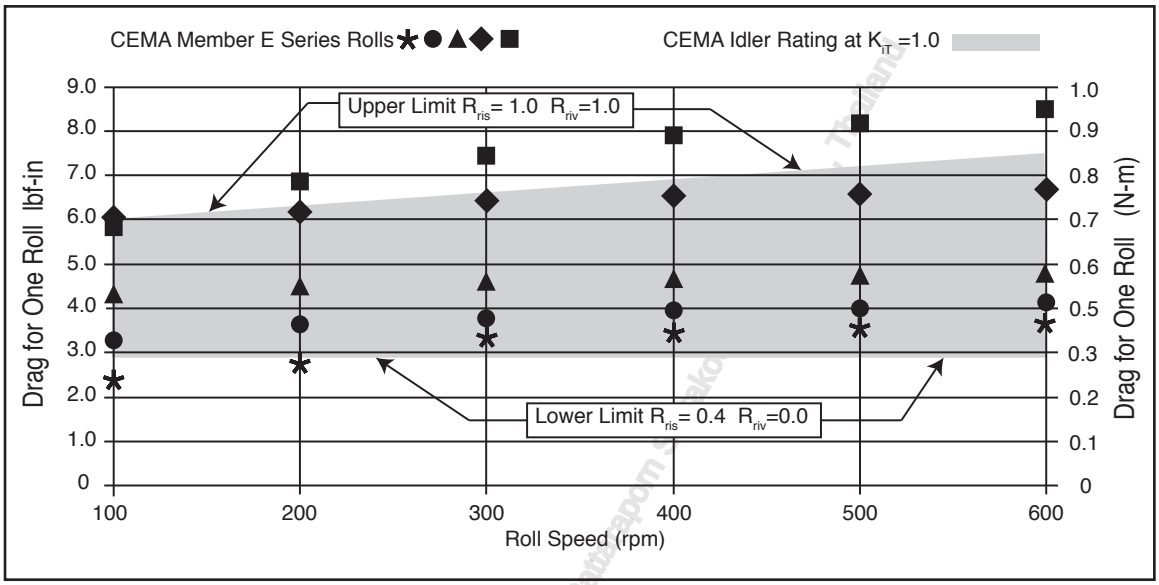

Figure 6.30
Example of actual K_{is} roll tests for speed dependence

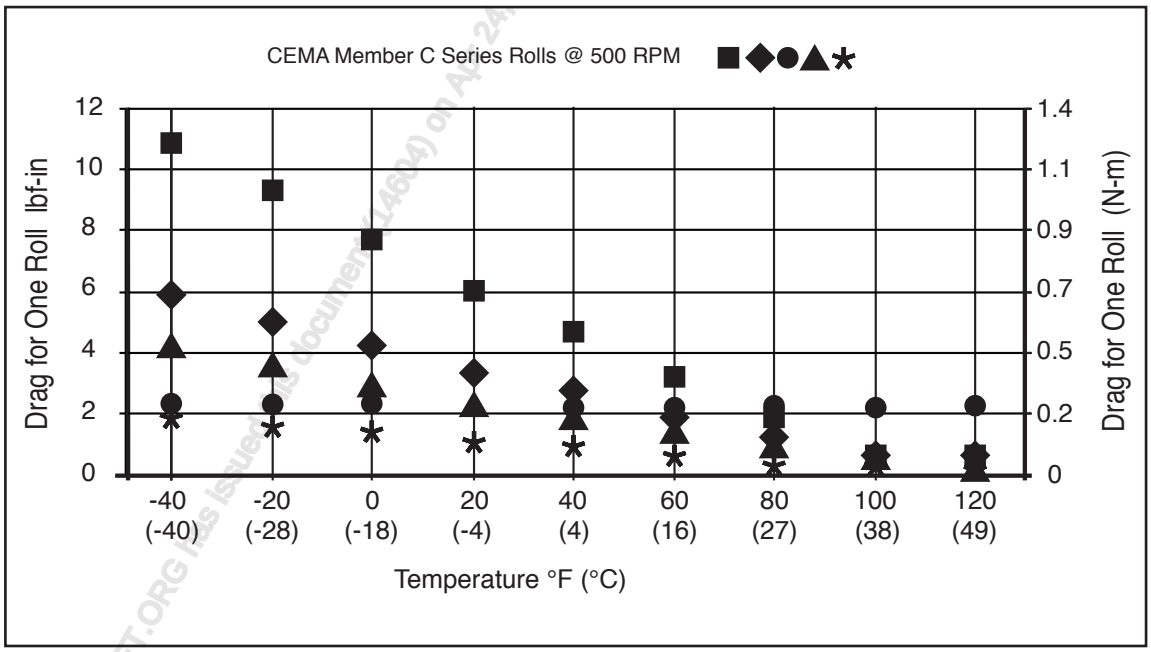

Figure 6.31
Example of actual K_{iT} roll tests for temperature dependence

WWW.CEMANET.ORG (As issued this document (14604) on Aug 24, 2015 to Puttiraporn Sirakoo, Thailand)

$n_r = 3.0$ $D_r = 6.0$ in $S_{i2} = 5.0$ ft $L_2 = 500$ ft $K_{iV} = 0.004$ in-lbf/rpm for CEMA D6 Idlers

$K_{is} = 4.0$ in-lbf $K_{iTa} = 198$ $K_{iTb} = -0.0100$ $R_{ris} = 1.0$ $R_{riV} = 1.0$ $T_F = 15.0°F$

$$\Delta T_{is2} = K_{iT} \times \Delta T_{ir} \times \frac{n_2}{S_{i2}} \times L_2$$

$$K_{iT} = K_{iTa} \times e^{K_{iTb} \times (T_F + 459.67)} = 198 \times e^{(-0.0100 \times 474.67)} = 198 \times e^{-4.7467} = 198 \times 0.0087 = 1.72$$

$$\Delta T_{ir} = \left[K_{iv} \times R_{riv} \times (N_i - 500 \text{ rpm}) + K_{is} \times R_{ris}\right] \times \frac{2}{D_r} =$$

$$\left[0.004 \frac{\text{in}-\text{lbf}}{\text{rpm}} \times 1.0 \times \left(\frac{12 \frac{\text{in}}{\text{ft}} \times 600 \frac{\text{ft}}{\text{min}}}{\pi \times 6 \text{ in}} - 500 \text{ rpm}\right) + 4.0 \text{ in-lbf} \times 1.0\right] \times \frac{2}{6 \text{ in}} = 1.176 \text{ lbf}$$

$$\Delta T_{is2} = K_{iT} \times \Delta T_{ir} \times \frac{n_2}{S_{i2}} \times L_2 = 1.72 \times 1.176 \text{ lbf} \times \frac{3}{5 \text{ ft}} \times 500 \text{ ft} = 607 \text{ lbf} \ (275.5 \text{ kgf})$$

Figure 6.32
ΔT_{is2}, Example idler seal friction calculation

Load Dependent Friction

Load dependent friction losses vary with the material and belt weight carried by the idlers and for some, with belt tension. A prime purpose of the idlers is to support the gravity loading from the belt and material from mid span to mid span of the adjacent idlers. While doing so, belt tension losses are seen as reaction forces parallel to the belt movement at each idler.

This section describes the interaction between the gravity loads and, those accumulating tension loads parallel to belt movement. Both load components are transmitted to the idler by an accumulating effect in the belt carcass or tension supporting element of the belt. When belt tension components cause additional normal loading on the idlers, such as with convex curves, these loads should be added to the weight of the belt and bulk material ($W_m + W_b$).

Idler Bearing Losses

In addition to load independent seal resistance, the idler resistance to rotation varies with load modeled as a Coulomb friction. This is due to internal sliding in the bearing and varies with the bearing used.

$$\Delta T_{iWn} = \frac{C_{iW} \times (W_b + W_m)}{\frac{D_r}{2}} \times L_n \times R_{riW}$$

Equation 6.33
ΔT_{iWn}, Idler load friction effect

Where:

ΔT_{iWn} = Change in tension in flight "n" from idler load friction
C_{iW} = Torsional load effect Table 6.34
R_{riW} = Modifying factor (dimensionless)

WWW.CEMANET.ORG has issued this copy (1400) on April 4, 2017 to Patrapom Sittrakool, Chaiyaung, , Thailand

CEMA Idler Series	Tapered Roller Bearing	Deep Groove Ball Bearing
B	0.0015	0.00125
C	0.0017	0.00145
D	0.0017	0.00185
E	0.0029	0.00255

Table 6.34
C_{iW}, Idler torsional resistance factor

C_{iW} = 0.00185 lbf-in/lbf for CEMA D6 Idlers D_r = 6.0 in L_2 = 500 ft

R_{riW} = 1.0 W_b = 26.3 lbf/ft W_m = 138.9 lbf/ft

$$\Delta T_{iW2} = \frac{C_{iW} \times (W_b + W_m)}{\frac{D_r}{2}} \times L_2 \times R_{riW}$$

$$\Delta T_{iW2} = \frac{0.00185 \ \frac{\text{lbf} - \text{in}}{\text{lbf}} \times (26.3 \ \frac{\text{lbf}}{\text{ft}} + 138.9 \frac{\text{lbf}}{\text{ft}})}{\frac{6.0 \text{ in}}{2}} \times 500 \text{ ft} \times 1.0 = 50.9 \text{ lbf} \ (23.1 \text{ kgf})$$

Figure 6.35
Idler load friction example calculation

In this example R_{riW} = 1.0 was used. Since idler and bearing designs vary widely, data for critical applications, including break in time, actual C_{iW} values should be obtained from a CEMA Member idler manufacturer. If the manufacturer information is not available use R_{riW} = 0.67.

WWW.CEMANET.ORG has issued this document (1460A) on July 24, 2017 to Pasupon Sritrakul, Suanluang, , Thailand

Belt Cover Indentation

The belt rubber is squeezed between the idler roll and the tensioning elements of the belt carcass as it transfers the material and belt weight to the idler roll. As the belt contacts the leading edge of the idler roll, movement is hindered slightly as the rubber deforms under this squeezing pressure. Conversely, belt movement is aided on the back side of the roll from a restoring reaction as the indentation deformation decreases. Since the rubber, as a viscoelastic material, does not rebound instantaneously, a portion of the work of deformation is not returned. The resulting deformation energy loss is absorbed by the belt as heat and seen as a net resistance to movement in the direction of belt movement through the moment that develops due to the offset between the center of the roll and the center of the vertical reaction as shown in Figure 6.36.

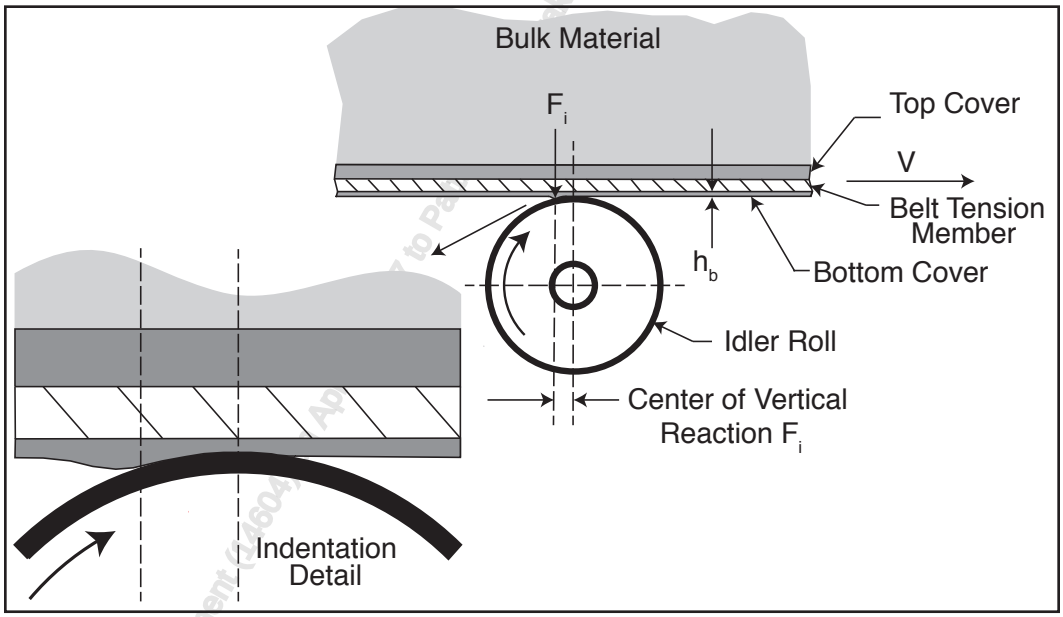

Figure 6.36
Belt cover deformation over carrying idler roll

There are two general approaches,the small sample and the large sample method, for determining the tension increase, ΔT_{bin}, due to cover indentation. The two methods result in similar values for ΔT_{bin}.

The small sample method tests uses a sample of the cover rubber being investigated as small as 3 mm × 12 mm × 30 mm. The dynamic physical properties E' (elastic storage modulus) and E" (loss modulus) of the belt cover rubber over a range of temperatures, strains and frequencies are obtained using a torsional rheometer. Constants characterizing the indentation losses are then calculated mathematically from knowledge of the rubber properties as it applies to the particular conveyor system parameters. The constants for the equations are unique to the rubber sample being tested and the mathematical method. Conveyor belt manufacturers and some CEMA Members have developed conversion methods for the data but there is currently no standard test or common analysis methodology.

The large sample method uses a full belt sample including top cover, carcass and bottom cover approximately 350 mm wide by 4800 mm long (13.8 × 190 in), spliced endless. The belt loop is installed on a test stand with adjustably loaded opposing rollers. The indentation resistance is measured directly at different idler loads, belt speeds and temperatures. DIN 22123 describes the large sample test method. The results of the large sample method can be used to directly compute the indentation loss, ΔT_{bin}.

www.CEMAtraining.com This document (1460) Assigned to Pa... School, Sharjah, Thailand

There are no generally available tabulated indentation values for various belt constructions for either the small or large sample methods. CEMA does not endorse any particular method so long as it accurately predicts the indentation resistance on a single idler for different temperatures and loads and can be used to determine ΔT_{bin} for specific belt constructions being considered in the conveyor design.

Indentation loss is usually a major factor on long overland conveyors. The magnitude of the indentation loss for short horizontal or inclined conveyors is usually not a significant loss component in the total tension requirement. While the indentation qualities of the belt covers are an important consideration for energy consumption, it is important to balance other requirements for the cover design such as abrasion resistance or flame retardancy when considering rubber compounds including a low rolling resistance (LRR) conveyor belt cover.

$$\Delta T_{bin} = K_{biR} \times c_{wd} \times (W_b + W_m) \times L_n \times R_{rbi}$$

Equation 6.37
ΔT_{bin}, Tension increase from viscoelastic indentation reaction between roller and belt

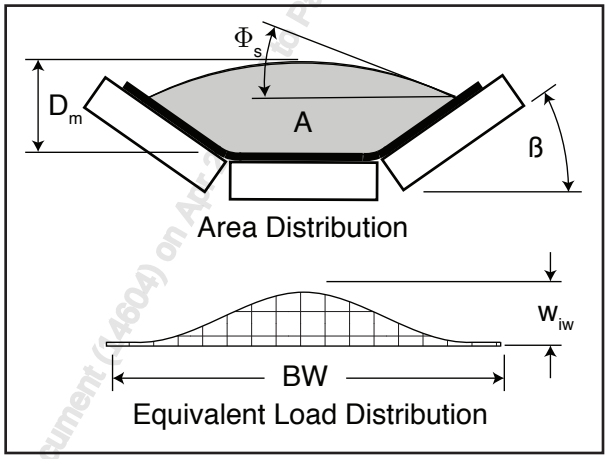

Figure 6.38
Equivalent load distribution from three roll idler cross sectional area

Two methods for K_{biR} are provided for the small sample ($K_{bir\text{-}S}$) and large sample ($K_{bir\text{-}L}$) methods. To arrive at ΔT_{bin} it is necessary to adjust for the uneven loading (Figure 6.38) on the rollers to arrive at an average pressure between the belt and roller. The equation for c_{wd} is derived from the geometry of the cross sectional area based on the load area, A and represents a correction to the average line load, w_{iw}.

$$c_{wd} = 1.239 + 0.10866 \times X_{ld} + 0.00500 \times \beta - 0.00476 \times BW - 0.00263 \times \phi_s$$

Equation 6.39
c_{wd}, Load distribution factor

$$X_{ld} = \gamma_m \times S_i \times X_{ldref}$$

$$X_{ldref} = 5.22 \frac{lbf}{in^2} \left(36{,}000 \frac{N}{mm^2} \right)$$

Equation 6.40
X_{ld}, Loading pressure adjustment factor

www.CEMANET.ORG e-Library Document (14604) on Apr-2016 @ Pattaraporn Sirakool, Siam Cable, Thailand

Where:

ΔT_{bin}	= Tension increase from viscoelastic deformation of belt cover rubber
K_{biR-S}	= Viscoelastic characteristic of belt cover rubber from the small sample method Equation 6.42
K_{biR-L}	= Viscoelastic characteristic of belt cover rubber from the large sample method Equation 6.60
c_{wd}	= Load distribution factor (dimensionless)
R_{rbi}	= Modifying factor (dimensionless)
S_i	= Idler spacing [ft (m)]
X_{ld}	= Loading pressure adjustment factor (dimensionless)
β	= Troughing angle (deg)
ϕ_s	= Surcharge angle (deg)
γ_m	= Bulk density of conveyed material

Small Sample Indentation Loss Method

Rubber indentation energy loss varies with the idler roll's indentation into the belt cover thickness and, with the nominal deformation work as affected by the idler roll radius and the normal load. Just as important is the degree to which the rubber reacts elastically to return the energy of deformation to the system. This is affected by the rubber composition, the amount of deformation or strain, the rubber temperature and, to a lesser degree, the belt speed. The rubber composition is a design variable through the viscoelastic concepts of Storage Modulus and Loss Modulus with their ratio, known as tan delta, as an index of the rubbers loss characteristic. These properties are best obtained from harmonic testing and vary with frequency, temperature and strain, paralleling the idler indentation of interest. The loss may be then considered to be the area within the steady cycles of stress and strain along the transient path of the indentation.

The contribution of the rubber material is incorporated into the indentation prediction with K_{biR-S}. In effect, it sets the width of the ellipse in Figure 6.41. For a particular rubber, the applicable value varies with the temperature, belt speed and loading. This requires a series of calculations with application details and a set of numerical values for the particular rubber. Constants for several example rubber cover compounds are provided for evaluation and consideration. Belt manufacturer should be contacted for selection, application and specification of compounds for specific applications.

WWW.CEMANET.ORG has issued this document (1664) on 19-2-2014 to Pubrasob Sitrakool, Sirinluang, , Thailand

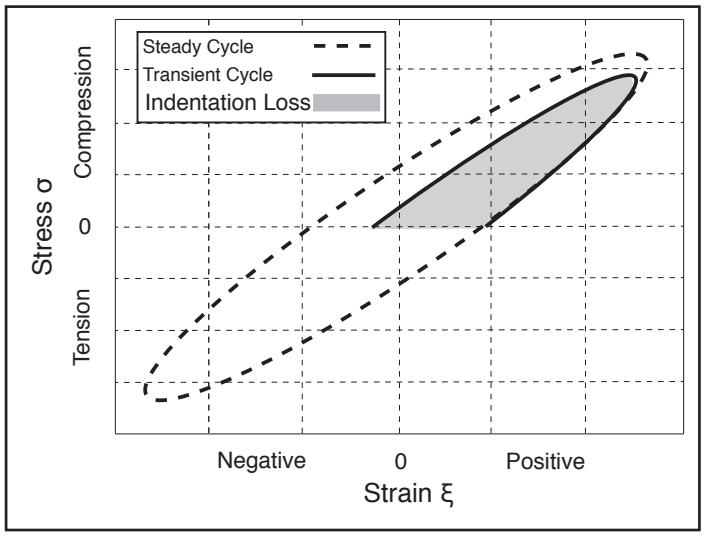

Figure 6.41
Harmonic stress/strain cycle

Although illustrative, the CEMA example rubbers presented in this section on the small sample method are not intended to represent any particular available rubber cover from any particular belt manufacturer. If used as design values, they could have significant economic, engineering and operating consequences for the system designer, the user and belt manufacturers. Due to a lack of standardization of the small scale test machines and testing methods, and the diversity of mathematical models to interpret the results to conveyor power, it is difficult to establish precise correlation between one method and another. The small sample approach is provided here is a predictive methodology is provided here as a practical approach for initial design feasibility.

Variables encompassing the above interactions result in a K_{biR-S}, combined with the load and its distribution on the belt, flight length and application of a Modifying Factor, R_{rbi}, for a consistent calculations suitable for comparison, optimization and safe preliminary designs when specified within the values provided. These elements are the result of detailed test and mathematical/numerical modeling done for this purpose. The results apply only to the cases described though they continue to be improved.

$$K_{biR-S} = \frac{F}{P} \times c_{sd} \times c_{bc}$$

Equation 6.42
K_{biR-S}, K_{ibR} as determined by the small sample method

P_{jn} is a parameter that parallels the length of the longitudinal axis of ellipse of Figure 6.41. The basic calculation is derived from a one dimensional, Winkler, deformation model. K_{biR-S} is modified by P_{jn} and several other factors to incorporate the viscoelastic nature of rubber and the three dimensional deformation distribution across the belt.

$$P_{jn} = \left[\frac{(W_b + W_m) \times S_{in} \times h_b}{E_0 \times \left(\frac{D_r}{2}\right)^2 \times BW} \right]^{1/3}$$

Equation 6.43
P_{jn}, Rubber bottom cover indentation parameter

Where:

BW = Belt width [in (mm)]
c_{bc} = 1.2 for fabric carcass belts and 1.12 for steel cable belts (dimensionless)
c_{sd} = 2.0 (dimensionless)
h_b = Belt cover thickness in contact with idler roller [in (mm)]
D_r = Idler diameter [in (mm)]
E_o = Rubber stiffness property [N/mm^2]
S_{in} = Idler spacing in flight, n [ft (m)]
W_b = Weight of the belt per unit length $\left[\frac{lbf}{ft}\ \left(\frac{N}{m}\right)\right]$
W_m = Weight of the bulk material on the belt per unit length $\left[\frac{lbf}{ft}\ \left(\frac{N}{m}\right)\right]$

WWW.CEMANET.ORG has issued this document (1400) to NP24, 2/3/20 Patrizia Capom Sharing by Scanlusa, Mailing

The contribution of the rubber material is incorporated into the indentation prediction with $K_{biR\text{-}S}$. In effect, it sets the width of the ellipse in Figure 6.41. For a particular rubber, the applicable value varies with the temperature, belt speed and loading. This requires a series of calculations with application details and a set of constant values for the particular rubber. Constants for several example rubber cover compounds are provided for evaluation and consideration. Belt manufacturer should be contacted for selection, application and specification of compounds for specific applications.

$$F = \frac{b_1 + [b_2 \times (x_F)] + [b_3 \times (x_F^2)] + [b_4 \times (x_F^3)]}{b_5 + [b_6 \times (x_F)] + x_F^2} \quad \text{(dimensionless)}$$

Equation 6.44
F, Normalized indentation factor

Where:

$$x_F = \frac{-C_1 \times (T - T_0)}{C_2 + (T - T_0)} + \log(v_u) - s \quad \text{(dimensionless)}$$

$$s = a_1 + [a_2 \times (x_s)] + [a_3 \times (x_s^2)] + [a_4 \times (x_s^3)] \quad \text{(dimensionless)}$$

T = Operating temperature (°C)

v_u = Belt speed $\left(\frac{m}{s}\right)$ [Note: v_u must be in $\frac{m}{s}$ units in x_F equation]

$$x_S = \left(\frac{w_{iW}}{w_{max}}\right)^{1/3} \text{(dimensionless)}$$

With: D_m Equation 6.70, γ_m = bulk density, S_i = idler spacing

$$w_{max} = 285.5 \frac{\text{lbf}}{\text{in}} \left(50{,}000 \frac{\text{N}}{\text{m}}\right)$$

Note:
For constants a_i, b_i, C_1, C_2 and T_0 see Table 6.47

$$w_{iW} = \left[D_m \times \gamma_m + \frac{W_b}{BW}\right] \times S_i$$

Equation 6.45
w_{iw}, Maximum line load at belt center

Where:

BW = Belt width in (mm)
D_m = Maximum depth of material on three roll idler in (mm)
γ_m = Bulk density $\frac{\text{lbf}}{\text{ft}^3}$ $\left(\frac{\text{kgf}}{\text{m}^3}\right)$
S_i = Idler spacing ft (m)
W_b = Belt weight per unit length $\frac{\text{lbf}}{\text{ft}}$ $\left(\frac{\text{N}}{\text{m}}\right)$

WWW.CEMANET.ORG has issued this document (1424) on Apr 17, 2007 to Patcharaporn Sritrakool (Siam Nylon Industry) , Thailand

$$P = \frac{c_1 + [c_2 \times (x_P)] + [c_3 \times (x_P^2)] + [c_4 \times (x_P^3)]}{c_5 + [c_6 \times (x_P)] + x_P^2} \text{ (dimensionless)}$$

$$x_P = \frac{-C_1 \times (T - T_0)}{C_2 + (T - T_0)} + \log(v_u) \text{ (dimensionless)}$$

Notes:

For constants c_i see Table 6.48

For constants C_1, C_2 and T_0 see Table 6.47

Equation 6.46
P, Rubber strain level adjustment

Where:

T = Operating temperature (°C)

v_u = Belt speed $\left(\frac{m}{s}\right)$ [Note: v_u must be in $\frac{m}{s}$ units in x_F equation]

Temperature and belt speed are reflected in F, while P adjusts the linear viscoelastic properties to the actual loading strain which is commonly in the range of nonlinear stress strain behavior.

A full set of constants representative of four types of example cover rubbers are provided in Tables 6.47 and 6.48. These constants are intended to approximate the performance of commercially available classes of conveyor belt rubber covers.

Constant	Default Rubber	Type 1 Rubber	Type 2 Rubber	Type 3 Rubber
T_0 (°C)	-3.024038	-3.979867	-0.030701	0.005
E_0 (N/m²)	9945456	9757293	11035707	12468384
C_1	17.45185	23.24667	29.37737	25.41034
C_2	177.2557	169.8751	214.4231	179.3597
a_1	-0.35429	-0.421415	-0.35429	-0.336227
a_2	4.06002	4.865202	4.06002	3.859253
a_3	-4.54043	-5.748855	-4.54043	-4.195092
a_4	1.92861	2.47541	1.92861	1.826561
b_1	1.053392	1.542234	1.053392	0.458954
b_2	-0.182956	-0.365242	-0.182956	-0.140241
b_3	0.026214	0.023831	0.026214	0.031505
b_4	-0.002687	0.000351	-0.002687	-0.002599
b_5	13.072109	43.361026	13.072109	8.698437
b_6	-4.58769	-12.840972	-4.58769	-4.674162

Table 6.47
Constants for Equation 6.44, $K_{biR\text{-}S}$ F factor

WWW.CEMANET.ORG has issued this document (4604) on Apr 2, 2017 to Pattarapom Sritrakool, Suanluang, , , Thailand

c_i Intervals: Each c_i constant is linearly interpolated for w_{iW}, relative to the seven levels of w_{ref} and extrapolated past the last row.							
Cover Compound	w_{ref} (N/m)	c_1	c_2	c_3	c_4	c_5	c_6
		(dimensionless)					
Default	50	72.823586	-15.993227	0.894994	0.007674	73.5406	-16.469735
	781.25	13.087349	-4.081407	0.830437	0.00727	15.609762	-5.229946
	3200	19.795824	-7.047877	0.795608	0.00313	24.954568	-8.979528
	8318.75	26.085887	-8.612814	0.78762	0.000988	33.157742	-10.985704
	17150	29.569802	-9.281963	0.785585	0.000441	37.667941	-11.840943
	30706.25	30.8115	-9.507821	0.784687	0.000214	39.279478	-12.129204
	50000	31.060747	-9.566614	0.784278	0.000107	39.609968	-12.20428
Type 1	50	62.280015	-13.991099	0.97748	0.001444	62.329346	-14.093358
	781.25	51.782128	-12.13993	0.789242	0.011081	54.496084	-13.460409
	3200	21.497594	-6.276245	0.680523	0.017448	25.471233	-8.208725
	8318.75	16.297514	-4.612051	0.662879	0.01501	22.26054	-7.028357
	17150	15.572718	-4.783286	0.641214	0.013201	23.3893	-7.666504
	30706.25	16.859875	-5.246605	0.622723	0.011397	26.642278	-8.595486
	50000	18.89338	-5.728367	0.61003	0.009562	30.701501	-9.513217
Type 2	50	86.630235	19.841426	1.043307	0.001827	86.856992	19.667252
	781.25	6.981862	2.617528	0.91964	0.020614	8.071031	2.847265
	3200	42.614702	-8.338799	0.488742	0.009067	63.550218	-14.405783
	8318.75	31.356054	-7.555346	0.508052	0.00654	53.74788	-13.78933
	17150	31.878233	-7.827432	0.506974	0.003897	57.807009	-14.68061
	30706.25	33.469375	-8.099311	0.508384	0.002248	62.334433	-15.411115
	50000	34.66393	-8.270816	0.509878	0.001406	65.494103	-15.858405
Type 3	50	46.59902	-11.887443	0.973644	0.001456	47.051467	-12.06724
	781.25	79.313111	-17.095325	0.793363	0.003555	87.687893	-19.564691
	3200	57.756984	-13.68793	0.778352	0.001127	69.433854	-16.847379
	8318.75	49.891924	-12.581414	0.779045	0.000612	62.053068	-15.831122
	17150	48.322668	-12.34657	0.779138	0.000361	60.944828	-15.672382
	30706.25	48.73659	-12.384495	0.779231	0.000218	61.875574	-15.786163
	50000	47.488014	-12.238979	0.779342	0.000142	60.504443	-15.634258

Table 6.48
Constants for Equation 6.46, $K_{biR\text{-}S}$ P factor at several w_{ref} values

Type 2 constants are for typical rubber cover compounds while Type 3 constants may also apply to cover compounds for common covers for more conservative designs that operate at lower temperatures. Type 1 constants are for a low rolling resistance rubber cover compound considered for applications where indentation losses are a significant contributor to the belt tension. These, especially, must be specified and verified by the manufacturer to apply to final designs. The default constants are intended for designs where a worst case rubber cover compound may be used without the designers need for knowledge of the belt covers. The default rubber in the 7th edition is similar to the rubber used in the 6th edition.

www.CEMANET.ORG has licensed this document (#1) to Apr 24, 2017 Purdue University, West Lafayette

Examples of an effective frictional drag equal to $K_{biR\text{-}S}$ are provided here to illustrate the importance of temperature and the sensitivity of drag to the specific cover compound. It should be understood that these relative relationships also change with the load supported by the idler and the distribution across the idler.

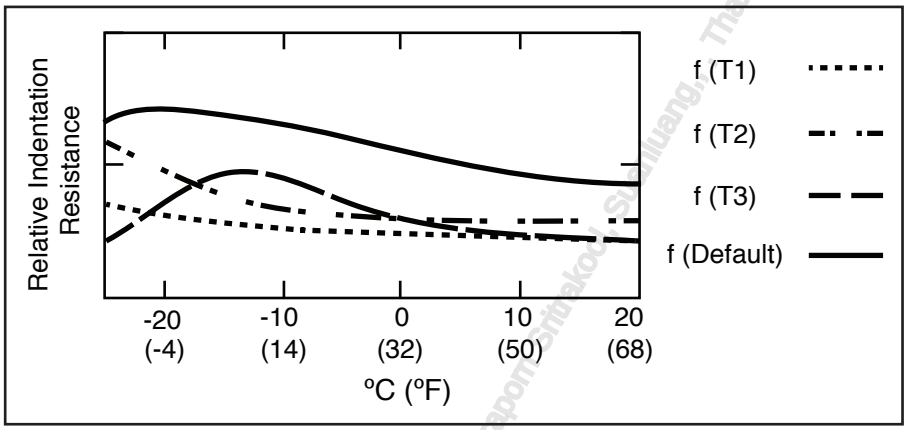

Figure 6.49
Typical indentation resistances for cover types for small sample method example rubbers

Type 3 rubber (T3), in particular, shows a temperature sensitivity that affects it's relative desirability for applications in tropic versus temperate climates. As such, it complicates the design process which is oriented to a good, better, best material versus low, high and highest cost and may be disregarded for clear design selection. Nonetheless, it illustrates the importance of incorporating the actual compounds performance if rubbers other than the default will be used. The curves are a valuable illustration of different compounds and their temperature dependencies. In reality most compounds incorporate blends of polymers.

The Type 1 (T1) rubber properties are provided to predict the potential benefits of using a conveyor belt with a LRR covers. For a new or a replacement belt on an existing system the idler indentation losses must be determined using data from the belt manufacturer for the particular LRR rubber covers being considered.

The calculation methods provided for indentation resistance represents the net effect of more detailed calculations. While elements of well-known fundamental concepts such as the WLF equation used in time temperature shifting for rubber characterization can be seen in the formulae provided, it should be under-stood that each are specific to the laboratory test results for the individual rubber specimen and the reference values T_0 and E_0 chosen in its test and characterization. Constants a, b and c were fit to the results of iterative numerical methods and must be used as a complete set. The same can be said for the adjustment constants. Contact CEMA Members for details and testing and modeling of specific rubbers.

In summary, the small sample method calculation of ΔT_{bin} is an extension of the 6th edition calculation providing additional and refined constants and curve fits. Though proven with limited tests of uniformly loaded belt constructions, confidence in their accuracy is based on findings of the nature of the rolling resistance problem and viscoelastic theory used in various applications. The range of belts and conditions used to generate the constants and curve fits were from belt widths of 36 to 96 inches (900 to 2400 mm), surcharge angles of 5 to 25 degrees, loading of 25% to 100% and, for trough angles of 20, 35, and 45 degrees.

www.CEMA.org has copyright on document (1 of 1) on 2/23/2017 to Chatarapon Shitakoti, Saraburi, Thailand

Small Sample Indentation Loss Example

The following example of the small sample method for belt cover indentation loss is divided into several steps for clarity. The example calculation is for the carrying run of flight 2 for the conveyor described in Tables 6.11 and 6.13 and, Figure 6.12. As with other example calculations rounding of intermediate results can have a minor affect on the final results.

Belt Cover Indentation Loss Example Assumptions

Design capacity: Q = 2,500 tph

Belt width: BW = 48 in

Cover thickness in contact with the rollers: $h_b = 0.375$ in

Unit weight of the belt, $W_b = 26.3 \frac{lbf}{ft}$, fabric belt

Default rubber cover compound, $E_0 = 9{,}945{,}456 \frac{N}{m^2} = 207{,}715 \frac{lbf}{ft^2}$

Belt speed: $V = 600 \frac{ft}{min}$, $v_u = 3.05 \frac{m}{s}$

Three equal roll troughing idler angle: $\beta = 35$ deg.

Idler roll diameter: $D_r = 6.0$ in

Idler spacing $S_{i2} = 5.0$ ft

Bulk material surcharge angle: $\phi_s = 20$ deg.

Material bulk density: $\gamma_m = 90 \frac{lbf}{ft^3}$

Operating temperature: $T_F = 15$ °F (9.4 °C)

Length of the flight: $L_2 = 500$ ft

Constants used in ΔT_{bin} calculation: $w_{max} = 285.5 \frac{lbf}{in}$, $X_{ldref} = 5.22$ psi

Figure 6.50
ΔT_{bi2}, Example small sample method cover indentation loss assumptions for flight 2

WWW.CEMANET.ORG has issued this document (1AAB) on Apr 2, 2014 to Patarapon Sriskol, Suanluang, , Thailand

Calculate the depth of material, D_m (Ref. Chapter 4)

Cross sectional area at design capacity, A:

Depth of material, D_m

$$a' = \frac{\cos(\beta)^2}{\sin(\Phi_s)^2} \times \left(\Phi_s - \sin(\Phi_s) \times \cos(\Phi_s)\right) + \cos(\beta) \times \sin(\beta)$$

$$= \frac{(0.8192)^2}{(0.3420)^2} \times \left((0.3491 - 0.3420) \times 0.9397\right) + 0.8192 \times 0.5736$$

$$a' = 5.7359 \times 0.02774 + 0.4699 = 0.6290$$

$$b' = b_c \times \sin(\beta) + b_c \times \frac{\cos(\beta)}{\sin(\Phi_s)^2} \times \left(\Phi_s - \sin(\Phi_s) \times \cos(\Phi_s)\right)$$

$$= 0.3762 \times 0.5736 + 0.3762 \times \frac{0.8192}{(0.3420)^2} \times (0.3491 - 0.3420 \times 0.9397)$$

$$b' = 0.2158 + 2.6349 \times 0.02774 = 0.2889$$

$$b_c = \frac{0.371 \times BW + 0.25}{BW} = 0.3762$$

$$c' = -\frac{A}{BW^2} + \frac{1}{4} \times \frac{b^2{}_c}{\sin(\Phi_s)^2} \times \left(\Phi_s - \sin(\Phi_s) \times \cos(\Phi_s)\right)$$

$$= -\frac{1.5432 \times 144 \frac{in^2}{ft^2}}{(48.0)^2} + 0.25 \times \frac{0.3762^2}{0.3420^2} \times 0.02774$$

$$c' = -0.0965 + 0.3024 \times 0.02774 = -0.0881$$

$$b_{wmc} = \frac{-b' + \sqrt{(b')^2 - 4 \times a' \times c'}}{2 \times a'} = \frac{-0.2889 + \sqrt{(0.2889)^2 - 4 \times 0.6290 \times (-0.0881)}}{2 \times 0.6290}$$

$$b_{wmc} = \frac{-0.2889 + \sqrt{0.3052}}{1.2580} = 0.2095$$

$$d_m = b_{wmc} \times \sin(\beta) + \left[\frac{b_c}{2} + \cos(\beta) \times b_{wmc}}{\sin(\phi_s)}\right] \times \left(1 - \cos(\phi_s)\right) = 0.2095 \times 0.5736 + \left[\frac{0.1881 + 0.8192 \times 0.2095}{0.3420}\right] \times (1 - 0.9397)$$

$$d_m = 0.1202 + 1.0518 \times 0.0603 = 0.1836$$

$$D_m = d_m \times BW = 0.1836 \times 48 \text{ in} = 8.81 \text{ in (224 mm)}$$

Figure 6.51
D_m, Example depth of material calculation for ΔT_{bi2}

WWW.CEMANET.ORG has issued this document (1.1.04) on Apr 24, 2017 to Pattarapon Sritrakool, Suanluang, , , Thailand

$$K_{biR\text{-}S} = \frac{F}{P} \times c_{sd} \times c_{bc}$$

Calculate F:

$$F = \frac{b_1 + b_2 \times (x_F) + b_3 \times (x_F^2) + b_4 \times (x_F^3)}{b_5 + b_6 \times (x_F) + x_F^2}$$

$$x_F = \frac{-C_1 \times (T - T_0)}{C_2 + (T - T_0)} + \log(v_u) - s \qquad \left[T_0 = 9.4\ ^\circ C \text{ and } V = 600\ \frac{ft}{min} \text{ or } 3.05\frac{m}{s} \ \therefore\ v_u = 3.05 \right]$$

$$s = a_1 + a_2 \times (x_s) + a_3 \times (x_s^2) + a_4 \times (x_s^3)$$

$$w_{iW} = \left(D_m \times \gamma_m + \frac{W_b}{BW} \right) \times S_i = \left(8.8\ in \times \frac{90\frac{lbf}{ft^3}}{1728\frac{in^3}{ft^3}} + \frac{26.3\frac{lbf}{ft} \times \frac{1\ ft}{12\ in}}{48\ in} \right) \times 5\ ft \times 12\frac{in}{ft} = 0.504\frac{lbf}{in^2} \times 60\ in = 30.24\frac{lbf}{in}$$

$$x_s = \left(\frac{w_{iW}}{W_{max}} \right)^{1/3} = \left(\frac{30.24}{285.5} \right)^{1/3} = 0.473$$

$$s = a_1 + a_2 \times (x_s) + a_3 \times (x_s^2) + a_4 \times (x_s^3) = -0.35429 + 4.06002 \times (0.475) - 4.54043 \times (0.473)^2 + 1.92861 \times (0.473)^3 =$$
$$= -0.35429 + 1.92039 - 1.01583 + 0.20409 = 0.754$$

From Table 6.47 for Default Rubber: $C_1 = 17.45185$, $C_2 = 177.2557$, $T_0 = -3.024038\ ^\circ C$

$b_1 = 1.053392$, $b_2 = -0.182956$, $b_3 = 0.026214$, $b_4 = -0.002687$, $b_5 = 13.072109$, $b_6 = -4.58769$

$a_1 = -0.35429$, $a_2 = 4.06002$, $a_3 = -4.54043$, $a_4 = 1.92861$

$$x_F = \frac{-C_1 \times (T - T_0)}{C_2 + (T - T_0)} + \log(v_u) - s = \frac{-17.45185 \times \left(9.4^\circ C - (-3.024038\ ^\circ C) \right)}{177.2557 + \left(\frac{(15^\circ F - 32^\circ F)}{1.8} - (-3.024038\ ^\circ C) \right)} + \log(3.05) - s =$$

$$x_F = \frac{112.047}{170.835} + \log(3.048) - 0.756 = 0.656 + 0.484 - 0.754 = 0.386$$

$$F = \frac{b_1 + b_2 \times (x_F) + b_3 \times (x_F^2) + b_4 \times (x_F^3)}{b_5 + b_6 \times (x_F) + x_F^2} =$$

$$= \frac{1.053392 - 0.182956 \times (0.386) + 0.026214 \times (0.386)^2 - 0.002687 \times (0.386)^3}{13.072109 - 4.58769 \times (0.386) + (0.386)^2} =$$

$$F = \frac{1.053392 - 070621 + 0.003906 - 0.000155}{13.072109 - 1.770848 + 0.148996} = \frac{0.98652}{11.4503} = 0.0862$$

Figure 6.52
ΔT_{bi2}, Example F calculation

www.CEMANET.ORG has issued this document (14604) to [illegible] 24, 2017 to Pattarapom Sridaeng, Suanluang, , , Thailand

$K_{biR\text{-}S} = \frac{F}{P} \times c_{sd} \times c_{bc}$

Calculate P:

$$P = \frac{c_1 + c_2 \times (x_P) + c_3 \times (x_P^2) + c_4 \times (x_P^3)}{c_5 + c_6 \times (x_P) + x_P^2}$$

$$x_p = \frac{-C_1 \times (T - T_0)}{C_2 + (T - T_0)} + \log(v_u)$$

From F calculation: $w_{iW} = 30.28 \frac{lbf}{in} = 5303 \frac{N}{m}$

From Table 6.47 for Default Rubber: $C_1 = 17.45185$, $C_2 = 177.2557$, $T_0 = -3.024038$

From Table 6.48 for Default Rubber:

$w_{ref} = 3200$: $c_1 = 19.795824$, $c_2 = -7.047877$, $c_3 = 0.795608$, $c_4 = 0.00313$, $c_5 = 24.954568$, $c_6 = -8.979528$

$w_{ref} = 8318.75$: $c_1 = 26.085887$, $c_2 = -8.612814$, $c_3 = 0.78762$, $c_4 = 0.000988$, $c_5 = 33.157742$, $c_6 = -10.985704$

Since the value w_{iW} is not in Table 6.48, the P-Constants must be interpolated:

Interpolation Factor $= \frac{5303 - 3200}{8318.75 - 3200} = 0.4095$ use 0.411

$c_1 = 19.795824 + (26.085887 - 19.795824) \times 0.411 = 22.38$

Similarly: $c_2 = -7.69$, $c_3 = 0.792$, $c_4 = 0.00225$, $c_5 = 28.33$, $c_6 = -9.8$

$$x_P = \frac{-C_1 \times (T - T_0)}{C_2 + (T - T_0)} + \log(v_u) = \frac{-17.45185 \times \left(9.4\ ^{o}C - (-3.024038\ ^{o}C)\right)}{177.2557 + \left(9.4\ ^{o}C - (-3.024038\ ^{o}C)\right)} + \log(3.05) =$$

$$= \frac{112.047}{170.835} + \log(3.048) - 0.756 = 0.656 + 0.484 = 1.14$$

$$P = \frac{c_1 + c_2 \times (x_P) + c_3 \times (x_P^2) + c_4 \times (x_P^3)}{c_5 + c_6 \times (x_P) + x_P^2} = \frac{22.38 - 7.69 \times (1.14) + 0.792 \times (1.14)^2 + 0.00225 \times (1.14)^3}{28.32 - 9.8 \times (1.14) + (1.14)^2} =$$

$$P = \frac{22.38 - 8.77 + 1.03 + 0.003}{28.32 - 11.17 + 1.30} = \frac{14.64}{18.45} = 0.794$$

Figure 6.53
ΔT_{bi2}, Example P calculation

WWW.CEMANET.ORG has issued this document (1460) on 12 / 2017 to Pattarapon Sritrakool, Suanluang, , , Thailand

$\Delta T_{bi2} = K_{biR-S} \times P_{j2} \times (W_b + W_m) \times c_{wd} \times L_2 \times R_{rbi}$

Calculate P_{j2}:

$$W_m = \frac{Q}{V} = \frac{2500\frac{t}{h} \times 2000\frac{lbf}{t}}{600\frac{ft}{min} \times 60\frac{min}{h}} = 138.9\frac{lbf}{ft}$$

$$P_{j2} = \left[\frac{(W_b + W_m) \times S_{in} \times h_b}{E_o \times \left(\frac{D_r}{2}\right)^2 \times BW}\right]^{1/3} = \left[\frac{\left(26.3\frac{lbf}{ft} + 138.9\frac{lbf}{ft}\right) \times 5\text{ ft} \times \frac{0.375\text{ in}}{12\frac{in}{ft}}}{207{,}715\frac{lbf}{ft^2} \times \left(\frac{6.0in}{2\times 12\frac{in}{ft}}\right)^2 \times \frac{48\text{ in}}{12\frac{in}{ft}}}\right]^{1/3} = \left[\frac{25.81\text{ lbf-ft}}{51{,}928.75\text{ lbf-ft}}\right]^{1/3} = 0.0792$$

Calculate K_{biR-S} :

For fabric belts: c_{sd}= 2.0, c_{bc} = 1.2

BW = 48 in, β and ϕ_s units = degrees

$$X_{ld} = \frac{\gamma_m \times S_i}{5.22\text{ psi}} = \frac{90\frac{lbf}{ft^3} \times 5\text{ ft}}{5.22\frac{lbf}{in^2} \times 144\frac{in^2}{ft^2}} = 0.599$$

Calculate ΔT_{bi2}:

Use R_{rbi} = 1.0

$$c_{wd} = \left[1.239 + 0.10866 \times X_{ld} + 0.005 \times (\beta) - 0.00476 \times (BW) - 0.00263 \times (\phi_s)\right] =$$
$$= \left[1.239 + 0.10866 \times 0.599 + 0.005 \times (35) - 0.00476 \times (48) - 0.00263 \times (20)\right] =$$
$$= 1.239 + 0.0651 + 0.1750 - 0.2285 - 0.0526 = 1.198$$

$$K_{biR-S} = \frac{F}{P} \times c_{sd} \times c_{bc} = \frac{0.0862}{0.794} \times 2.0 \times 1.2 = 0.026$$

$$\Delta T_{bi2} = K_{biR-S} \times P_{j2} \times (W_b + W_m) \times c_{wd} \times L_2 \times R_{rbi} = 0.026 \times 0.0792 \times \left(26.3\frac{lbf}{ft} + 138.9\frac{lbf}{ft}\right) \times 1.198 \times 500\text{ ft} \times 1.0 = 2{,}041\text{ lbf}$$

ΔT_{bi2} = 2041 lbf (927 kgf) or $4.08\frac{lbf}{ft}$ for flight 2

Note:

$K_{biR-S} \times P_{j2}$ = 0.025 can be considered an equivalent indentation loss friction factor for the carrying run of flight 2 with the default rubber.

Figure 6.54

ΔT_{bi2}, Example P_{j2} calculation and final ΔT_{bi2} small sample method result

WWW.CEMANET.ORG has issued this document (1.6.0) on Apr 24, 2017 to Pattarapom Sirirangpol, Chulalong., , Thailand

Large Sample Indentation Loss Method

The indentation rolling resistance over a range of temperatures, idler diameters, belt loads and belt speeds of a full sized belt sample in the form of a closed loop is measured directly by a single instrumented idler roll on a two-pulley test machine. The design of the large sample method testing machines is an active area of research with competing test setups and standards. Currently, one standard exists (DIN 22123) describing a test method. With minor adjustment, idler indentation losses can be calculated mathematically for a particular conveyor are set by application of the measured idler indentation rolling resistance.

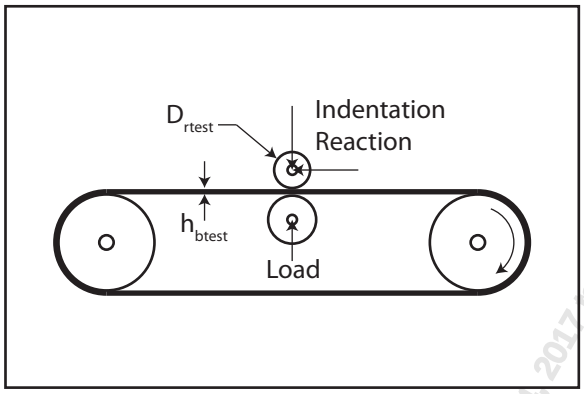

Figure 6.55
DIN 22123 large sample method test schematic

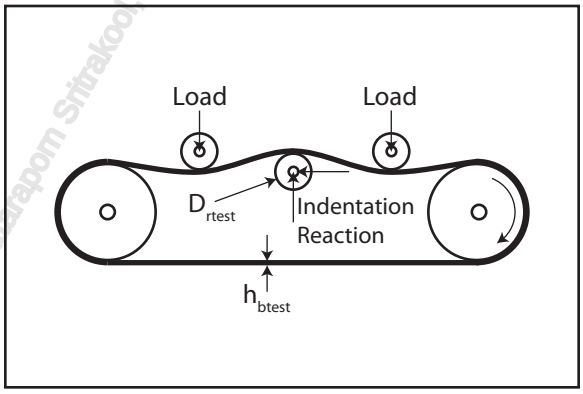

Figure 6.56
Alternate large sample method testing schematic

The applied loads, and indentation resistances measured in the large sample method are typically reported per unit belt width. In other words, the test reports a "Width Related Load" (w_{RL}) which is the applied load divided by test belt width, and a resulting "Width Related Indentation Rolling Resistance" (W_{RIRR}) which is the indentation resistance is divided by test belt width. The reason for this is simple. Most of the large sample test machines are not large enough to test wide belts. Reporting the forces per unit belt width allows designers to scale the results to the actual belt that will be installed on the system. It also allows designers to compare the test results from different machines that accommodate different belt widths.

After determining the appropriate K_{biT} and c_{hr} the factor K_{biR} described earlier in the CEMA Universal Method is computed for the large sample method using the following relation:

$$K_{biR-L} = K_{ibT} \times c_{hr} \times R_{rbi}$$

Equation 6.57
K_{biR-L}, Large sample method indentation loss for a single idler set

To determine the indentation loss per unit load for the large sample method we define a new variable, K_{biT}, that is determined from the large sample test.

$$K_{biT} = \frac{w_{RRIR}}{w_{RL}}$$

Equation 6.58
K_{biT}, Large sample method friction factor

WWW.CEMANET.ORG has issued this document (CEMA1460) on Apr 24, 2017 to Pattrapom Sritrakool, Suanlarn Co., Ltd.

Where:

K_{biT-L} = Large sample method friction factor (dimensionless)
w_{RRIR} = Indentation loss from a single idler roll [lbf/im (N/mm)]
w_{RL} = Width related load [lbf/im (N/mm)]

w_{RL} used in the large sample method is the average line load on the belt as applied by the test roll and seen on the operating idler.

Measured values of w_{RIRR}, and w_{RL} on a steel cord belts with conventional (Type I) rubber and with LRR (Type II) rubber are tabulated for various temperatures in Table 6.61. Typical results are llustrated in Figure 6.64. This table contain measurements from two real rubbers that are in common use today. K_{ibT} values for these two rubbers are shown as a calculated result in Table 6.63. The small and large sample methods results are comparable but note that the large and small sample examples provided are for different rubbers and meant to be illustrative of the indentation phenomenon for typical rubber compounds. (Note: the data sets used in the large and small sample method examples are not for the same rubbers.) For final conveyor designs, actual test data from a test loop with the actual installed rubber should be used.

The width related load in the conveyor a designer is analyzing is computed using the following expression:

$$w_{RL} = \frac{(W_b + W_m) \times S_i}{BW}$$

Equation 6.59
W_{RL}, Width related load factor

Where:

BW = Belt Width of the conveyor being evaluated
S_i = Idler spacing in the flight being evaluated
W_b = Weight of the belt per unit length
W_m = Weight of the bulk material per unit length

To determine the indentation resistance on a section of conveyor the designer simply finds the K_{biT} in the table that corresponds to the temperature, and computed the width related load on a particular section of conveyor.

The indentation resistances recorded in Table 6.63 were measured in a 219 mm (8.62 in) diameter idler roll pressed into a steel cord belt with 7 mm (0.28 in) bottom covers. To predict losses when idler diameters and belt cover thicknesses that are different from those tested, the designer can multiply K_{biT} by a constant, c_{hr}, defined as follows:

$$c_{hr} = \frac{\left(\frac{h_b}{H_{test}}\right)^{0.25}}{\left(\frac{D_r}{D_{test}}\right)^{0.7}}$$

Equation 6.60
c_{hr}, Modification factor for idler diameter and cover thickness

WWW.CEMANET.ORG is issued this document (1430) on Apr 24, 2017 to Patarapon Sriprapol, Suhuan, Thailand

Where:

D_r = Diameter of the idler roll in flight "n"
D_{test} = Diameter of the idler roll on the test machine
h_b = Thickness of the cover in contact with the idler
H_{test} = Bottom cover thickness of the test belt

Temp (°C)	Typical Type I			Typical Type II LRR		
	w_{RL} (kN/m)	W_{RIRR} (N/m)	K_{biT} (dimensionless)	w_{RL} (kN/m)	W_{RIRR} (N/m)	K_{biT} (dimensionless)
40	1	8.9	0.0089	1	6.0	0.0060
40	5	60.3	0.0121	5	41.5	0.0080
40	10	149.8	0.0150	10	110.2	0.0110
40	15	265.3	0.0179	15	206.5	0.0140
40	20	416.6	0.0210	20	312.4	0.0160
20	1	9.6	0.0096	1	7.0	0.0070
20	5	64.1	0.0130	5	46.7	0.0090
20	10	163.4	0.0160	10	119.1	0.0120
20	15	294.6	0.0196	15	222.3	0.0148
20	20	441.9	0.0221	20	331.2	0.0166
10	1	8.9	0.0089	1	7.0	0.0070
10	5	60.4	0.0121	5	46.5	0.0093
10	10	164.2	0.0164	10	119.8	0.0120
10	15	294.0	0.0196	15	223.5	0.0149
10	20	462.0	0.0231	20	336.4	0.0168
0	1	10.3	0.0103	1	7.7	0.0077
0	5	67.6	0.0135	5	49.8	0.0100
0	10	181.0	0.0181	10	125.4	0.0125
0	15	335.1	0.0223	15	233.9	0.0156
0	20	513.4	0.0257	20	345.9	0.0173
-10	1	11.7	0.0117	1	8.4	0.0084
-10	5	74.3	0.0149	5	53.7	0.0107
-10	10	206.4	0.0206	10	135.1	0.0135
-10	15	382.9	0.0255	15	243.4	0.0162
-10	20	603.2	0.0302	20	366.6	0.0183
-20	1	13.5	0.0135	1	10.2	0.0102
-20	5	83.6	0.0167	5	62.6	0.0125
-20	10	203.3	0.0203	10	152.3	0.0152
-20	15	369.3	0.0246	15	262.7	0.0175
-20	20	569.2	0.0285	20	396.6	0.0198
D_{rtest} = 219 mm, h_{btest} = 7 mm, V = 3 m/s Steel Cable Belts						

WWW.CEMAT.ORG has issued this standard (1460) on Apr 24, 2008 to Laurapor Srisakorn Suanluang , Thailand

Table 6.61
Typical large sample method data for Type I and Type II rubber and KbiT results

Large Sample Indentation Loss Example

Belt Cover Indentation Loss Large Sample Method Example Assumptions
Reference Figure 6.55
Design capacity: Q = 2,500 tph
Belt width: BW = 48 in
Cover thickness in contact with the rollers: h_b = 0.375 in
Bottom cover rubber Type I
Unit weight of the belt, $W_b = 26.3 \frac{lbf}{ft}$
Note: Using steel cable belt data but same belt weight as small sample example
Belt speed: $V = 600 \frac{ft}{min}$
Three equal roll troughing idler angle: $\beta = 35$ deg.
Idler roll diameter: D_r = 6.0 in
Idler spacing S_{i2} = 5.0 ft
Bulk material surcharge angle: $\phi_s = 20$ deg.
Material bulk density: $\gamma_m = 90 \frac{lbf}{ft^3} = 0.0521 \frac{lbf}{in^3}$
Operating temperature: T_F = 15°F (-9.4 °C)
Length of the flight: L_2 = 500 ft

Figure 6.62
Large sample method indentation loss example inputs

WWW.CEMANET.ORG has issued this document (1/5/04) to AP, 24, 01 to Pattaraporn Smitkool, Suandong, , Thailand

Compute c_{wd} :

$$X_{ld} = \frac{\gamma_m \times S_i}{X_{ldref}} = \frac{0.0521\frac{lbf}{in^3} \times 5\text{ ft} \times 12\frac{in}{ft}}{5.22\frac{lbf}{in^2}} = 0.60$$

$$c_{wd} = 1.239 + 0.10866 \times X_{ld} + 0.00500 \times \beta - 0.00476 \times BW - 0.00263 \times \phi_s$$

$$c_{wd} = 1.239 + 0.10866 \times 0.599 + 0.00500 \times 35 - 0.00476 \times 48 - 0.00263 \times 20 = 1.198$$

Compute c_{hr} :

$$c_{hr} = \frac{\left(\frac{h_b}{H_{test}}\right)^{0.25}}{\left(\frac{D_r}{D_{test}}\right)^{\frac{2}{3}}} = \frac{\left(\frac{0.375}{.2756}\right)^{0.25}}{\left(\frac{6.0}{8.622}\right)^{\frac{2}{3}}} = 1.392$$

Compute w_{RL} :

$$w_{RL} = \frac{\left(W_b + W_m\right) \times S_i}{BW} = \frac{\left(26.3\frac{lbf}{ft} + 138.9\frac{lbf}{ft}\right) \times 5\text{ ft}}{48 \times \frac{1\text{ ft}}{12\text{ in}}} = 206.5\ \frac{lbf}{ft} = 3.01\ \frac{kN}{m}$$

From Table 6.63 extrapolate K_{biT} using -10°C and values of w_{RL} @ $1\frac{kN}{m}$ and $5\frac{kN}{m}$:

$$K_{biT} = \frac{3}{5} \times (0.0149 - 0.0117) + 0.0117 = 0.0136 \text{ and } 0.0136 - \left[\frac{9.4^\circ}{10^\circ} \times (0.0149 - 0.0117)\right] = 0.0133$$

Compute ΔT_{bin} :

$$\Delta T_{bin} = K_{biR\text{-}L} \times c_{wd} \times (W_b + W_m) \times L_n \times R_{rbi}$$

$$\Delta T_{bi2} = K_{biT} \times c_{hr} \times c_{wd} \times (W_b + W_m) \times L_n \times R_{rbi}$$

Figure 6.63
Large sample method indentation loss example calculation

WWW.CEMANET.ORG has issued this document 1460 on Apr 24, 2017 to Pattarapom Sritrakool, Siam Cem Pcl., , Thailand

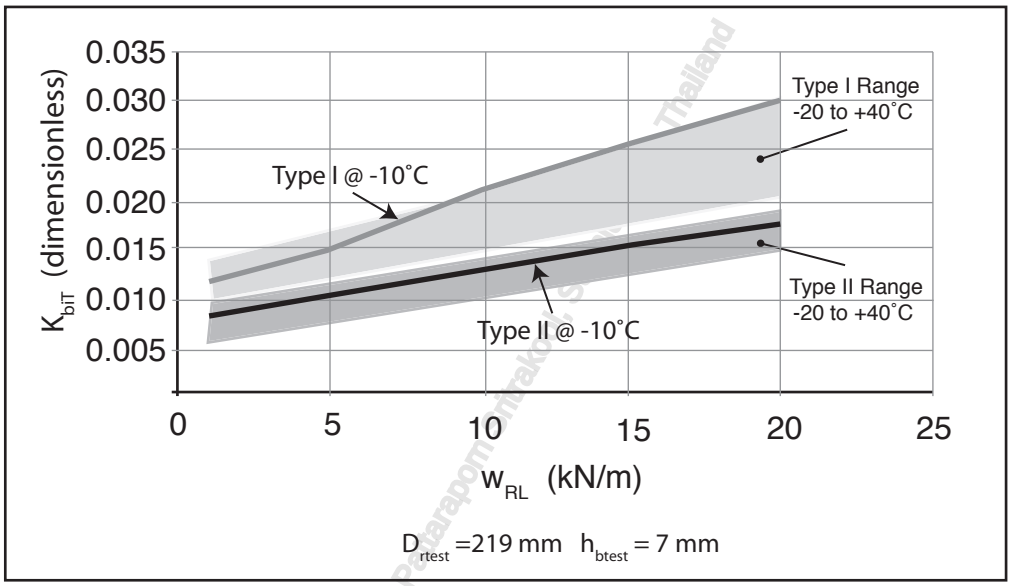

Figure 6.64
Typical large sample method curves for Type I and Type II rubbers

Discussion of Indentation Correction Factors

The c_{sd} parameters in the $K_{biR\text{-}S}$ calculation are provided as estimates of the difference between the uniform strain assumption and the actual two dimensional case. The value of 2.0 was found to provide good correlation between the predictions using P_{jn}, F and P in a direct comparison study for the same rubber as well as to the range of prediction and test results for two populations of rubbers with a range of viscoelastic properties. This difference is due the variation of rubber strain between the roller and belt carcass but also due to higher strain regions at the carcass ahead of and behind the roll center line induced by the incompressible nature of rubber.

The value of c_{bc} = 1.2 for fabric belts and 1.12 for steel cord belts is provided as the difference between a solid carcass and multiple ply fabric belt constructions and steel cable belts (without reinforcing fabrics) as reported in the technical literature. This c_{bc} value is recommended to incorporate the effect of the additional and different rubber between the plies and cables subject to additional viscoelastic deformation.

The pressure under the bulk material load in the trapezoidal belt trough is not uniform. It should be clear that material depth varies across the belt width depending on material surcharge and troughing angle and that it and the loaded width provides a wide variation in the pressure and pressure distribution. The belt and bulk internal friction with the troughing angle also influence the belt pressure. In addition the belt sag and cross sectional load profile relaxation cause bulk movements and dynamic belt pressure variations between idlers. Since rolling resistance is not proportional to pressure the total resistance must be the sum or integration of the varying unit resistance across the belt.

Since the gravity load supported by the idler is not uniform along the width of a carrying idler, the resistance is also not uniform across the belt width. Additional pressures can also develop from the belt trough opening and closing. These are affected by the tension and belt construction as discussed in the section on trampling loss and also by the material internal friction and the belt friction. The load on the idler affects the amount of energy loss due to the nonlinear relationship of indentation loss to load so that large variations of the same load cause greater indentation loss.

www.BELAEF.com (Issued to Prapon Intrakul on 2017 to Prapon Intrakul Thailand)

Parameter c_{wd} is provided to adjust the prediction from a uniform pressure to accommodate this variation. It was developed by considering a range of static loadings with no belt friction similar to the effect of settling during belt movement and evaluating the total rolling resistance for each with a particular idler spacing and material bulk density. The results were fit to the equations provided to adjust for the various model variables. They are most accurate for tight and stiff belts such as with steel cable construction but may be high for idler spans with higher sag. This is due to the observation that the bulk material 'active' pressure during belt opening is less than the 'passive' pressure during closing of the cross section so that higher average pressures develop on the wing rolls reducing the average load on the center roll where the pressures are highest and thereby reducing the range and variation of unit resistance across the belt. The value of c_{wd}=1.0 applies for unloaded return belts.

The load distribution correction factor, c_{wd}, was developed for the case of low belt sag deformation and low belt to material friction, and is most applicable to steel cable belts where deflection is low. The load distribution factor, although conservative in some cases, is a good estimate for general applications.

The dimension correction c_{hr} for the large sample method corrects the measured losses between similar applications that affect the rubber strain level. Note that the exponents are similar to those in P_{jn} of the small sample method.

The accuracy of the belt cover indentation calculation varies with the actual rubber cover compound, belt construction and operating condition so, unless belt manufacturer input for the particular application is provided, use R_{rbi} = 0.75 for the small sample method and 0.90 to 0.95 for the large sample method, except for return belts where it equals 1.0 in both methods. The actual surcharge angle should be used rather than the maximum possible surcharge since it can be affected by how the belt is loaded. The maximum possible surcharge from Chapter 3 should provide a worst case prediction.

The indentation resistance calculation should be done for the carry and return runs of the conveyor with the respective cover thickness, compound and idler diameter. The carry side calculation uses the bottom cover while the return side will be the top cover unless a turnover is used.

WWW.CEMANET.ORG has issued this document (14100) to A. Ali, 4/20/2017 Purchased from SAIMUN, Standard, Single

Belt Cover Indentation Loss Case Study

For long, horizontal overland conveyors, belt cover rubber indentation losses on the idlers usually accounts for 40 to 80 % of the total belt resistances depending on the level of the other resistances and the rubber cover used. Rubber indentation loss is the most significant contributor to belt tension and motor power for this class of conveyor. Because of its high sensitively to the conveyor's overall power, belt manufacturers have sought to develop specialized rubber covers that reduce the indentation losses and improve the conveyor's power efficiency, known as low rolling resistance rubber covers similar to a Type 1 rubber from the small sample method. Low rolling resistance belt covers offer two possible benefits to the end user.

- Energy savings
- Increased capacity with existing installed power (within capacity limits)

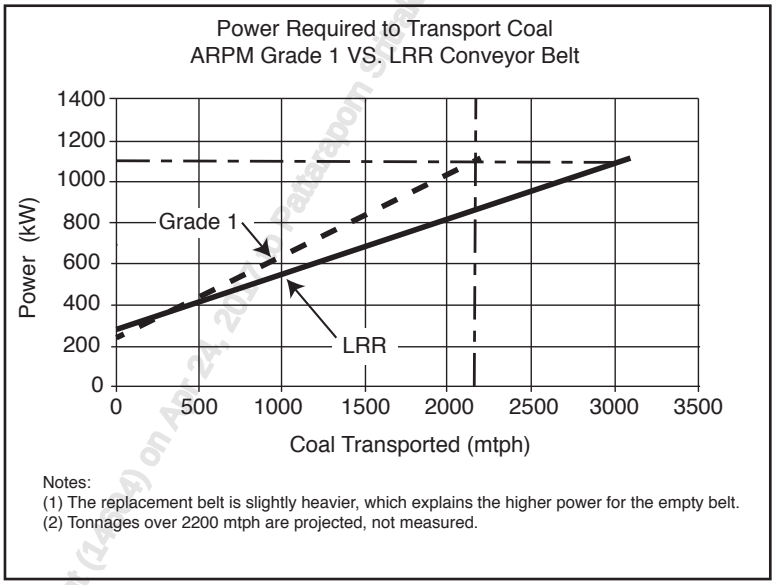

Figure 6.65
Field measured power demand for a 6.6 km coal conveyor

Figure 6.65 shows field measurements of the average motor power demand (kW) versus transported load (tons per hour) for an originally installed belt with ARPM Grade 1 rubber covers and a specifically designed replacement belt with low rolling resistant bottom cover. The 1050 mm (41.3 in) wide, 6.6 km (21,640 ft) long conveyor was originally designed to transport 2200 mtph (2425 tph) of coal at 5.9 m/s (1,161 fpm).

- At the design 2,200 mtph (2,424 tph) the replacement belt power is 880 kW (1,180 hp) (20% lower) compared to the original belt's 1,100 kW (1,475 hp).
- At the design 1,100 kW power, the replacement belt can transport up to 3,000 mtph (3,300 tph) compared to 2,200 mtph with the original belt, or the capacity limit if less than 3,000 tph. (In this particular case the original belt capacity is 82% of CEMA's 100% capacity. So in reality only an 18% capacity gain can be realized.

Note:
This case study is for illustration only. Contact a CEMA Member belt manufacturer for specific design information, calculations and specifications for final designs.

www.CEMANET.org Files issued to document (14284) on Apr 24, 2015 to Patcharaporn Sakkoda, Suankularb, Thailand

Belt on Idler Alignment Friction

The transverse forces caused by angular misalignment to the true belt line create a retarding force to belt movement that is seen as a tension loss. Idler misalignment can have a major impact on the tension requirements depending on its magnitude and the coefficient of friction between the belt and idler roll. Ideal idler axes are perpendicular to the direction of belt travel but minor deviations from several sources can accumulate into significant losses.

The axes and planes convention in this manual are: XZ is the vertical plane on the center of the conveyor belt line, XY is the horizontal plane coincident with the horizontal surface of the top cover of the belt and YZ is the vertical plane perpendicular to the XY and XZ planes. X is considered positive in the direction of belt travel. See Figure 6.66

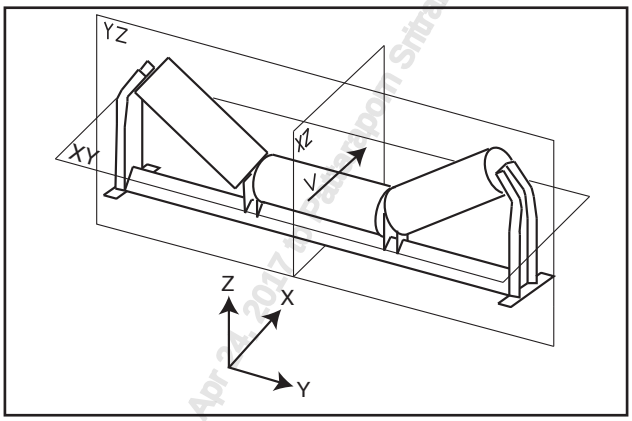

Figure 6.66
Idler alignment planes relative to the conveyor and belt center line

Unless specially manufactured and installed very precisely, a small misalignment angle inevitably exists that causes a small transverse slip between the belt and idler. This slip causes small transverse forces. These force components tend to average themselves out in the Y direction so that belting track is usually not significantly affected but the tension losses still accumulate.

Select idler frames in strategic locations are often purposely misaligned to assist in training the belt to track properly but their drag contribution, as with self-aligning idlers, is usually not significant compared to the total misalignment losses. It should be noted that vertical and horizontal offset alignment of idler sets to the central XZ and XY planes of the conveyor can occur intentionally or not but do not have the major impact on resistance to movement that angular misalignment alignment to the YZ plane does. Tighter manufacturing and installation tolerances are often specified for critical conveyors, such as overland conveyors, where idler misalignment is a significant component of the tension calculation.

Several contributions to misalignment loss can be identified. These slips all act as resistances proportional to the load, misalignment angle and sliding friction factor.

- Manufacturing tolerance misalignment where the wing roll axes in an idler set are not in the same plane as the center roll.
- Installation misalignment where the plane of the idler rolls referenced as the axis plane of the center roll of a troughing idler set is not perpendicular to the belt travel.
- Idler tilt places the wing rolls out of the YZ plane. The idler can be manufactured with a slight tilt or shimmed in the direction to aid in belt tracking so that the wing rolls fight each other in pushing the belt toward the belt center but power loss is a result.

www.conveyor-training.com Issued to Thapanan Thongmanee (3160) on Apr 04, 2017 Pacific Pipe Sritrakool, Sriracha, Thailand

•The center roll of a garland idler becomes offset from the support points at the outboard end of the wing rolls during operation causing angular misalignment of the wing rolls.

This transverse slip causes a retarding force seen as tension loss that is significant for conveyor design.

$$\Delta T_{imn} = C_{im} \times L_n \times (W_b + W_m) \times R_{rim}$$

Equation 6.67

ΔT_{imn}, Idler misalignment force

$$C_{im} = C_{bi} \times a_{im}$$

Equation 6.68

C_{im}, Design factor for frictional resistance due to idler misalignment

$$a_{im} = \frac{\Delta A_e}{A_s}$$

Equation 6.69

a_{im}, Average misalignment of idler axis to belt longitudinal axis

$$\Delta A_e = \Delta A_{ei} + \Delta A_{em} + \Delta A_{et}$$

Equation 6.70

ΔA_e, Effective total alignment deviation from perpendicular to belt travel

Where:

ΔA_e = Effective total deviation from perpendicular to belt travel [in (mm)]
ΔA_{ei} = Expected average installation perpendicular linear deviation from plane XZ [in (mm)]
Δa_{ei} = Expected average installation angular deviation from plane XZ (deg)
ΔA_{em} = Effective misalignment from manufacturing tolerances [in (mm)]
ΔA_{et} = Effective misalignment from idler tilt from YZ plane [in (mm)]
A_s = Distance between idler mounting supports (bolt holes) [in (mm)]
β = Idler troughing angle (deg)
C_{bi} = Coefficient of friction between belt cover and idler roll material (dimensionless)
$C_{im} = C_{bi} \times e_{im}$ (dimensionless)
a_{it} = Intentional inclination (tilt) of idler frame or wing rollers to aid in belt tracking [in/in (mm/mm)]
a_{im} = Average misalignment of idler axis to belt longitudinal axis [in/in (mm/mm)]
ΔT_{imn} = Tension loss in flight "n" from idler misalignment [lbf (kgf)]

www.CEMANET.ORG is issued to [illegible] on Apr 24 2017 to Chatchapom Sitrakoon Suchuan, , Thailand

C_{bi}	Application
0.38 (10)	Sliding friction factor for polymer roll on rubber belt cover
0.50 (13)	Sliding friction factor for steel roll on rubber belt cover
0.66 (17)	Sliding friction factor for urethane roll on rubber belt cover
0.75 (19)	Sliding friction factor for rubber roll on rubber belt cover

Table 6.71

C_{bi}, Idler and belt friction factors for misalignment calculations

Installation Misalignment

Idlers are usually installed as a subcomponent by bolting to a pre-assembled framework. Slots with the idler frame allow their angular alignment to be adjusted but this also removes any consistent installation procedure. The resulting alignment varies widely but estimates for different cases are provided here to aid in design unless overridden by project specifications.

ΔA_{ei} [1] in (mm)	Δa_{ei} [2] Deg.	Idler Mounting and Alignment Conditions [3]
0.25 (6)	0.25	For idlers installed on permanent rigid structure with deliberate alignment procedures.
0.50 (13)	0.50	For idlers as installed on structural steel with out any alignment procedure.
0.75 (19)	0.75	For idlers installed on independent imprecise footings.
1.50 (38)	1.50	For idlers installed in difficult mounting conditions such as unstable footings, roof hung or underground conveyors.

[1] The value of A_{ei} has previously been set as a single dimension regardless of mounting bolt distance or belt width

[2] Assuming the linear value for A_{ei} is based on a standard base 48 inch 3 equal roll troughing idler, these angular values for a_{ei} are suggested. $\Delta A_{ei} = \tan(\Delta a_{ei}) \times A_s$.

[3] Common practice is not to align idlers but to assume structure has been fabricated and installed properly. In this case use actual tolerances of idler mounting dimensions or use 0.50 (13) or 1.0 degrees as a default value.

Table 6.72

ΔA_{ei}, Expected installation deviation values per idler from XZ plane

A combination of the linear and angular calculations are suggested as default if actual average installation misalignment is not known.

$$\Delta A_{ei} = \frac{\Delta A_{ei}}{2} + \tan\left(\frac{\Delta a_{ei}}{2}\right) \times A_s$$

Equation 6.73

ΔA_{ei}, Combined linear and angular misalignment suggested default

The best alignment is found when each idler is perpendicular to the belt centerline. Ideally idler alignment should be done using the center roll but in practice this is difficult to do without specialized alignment equipment. In practice, alignment is established by first laterally centering the idler and then squaring each by a triangular measurement before tightening the mounting bolts. Since the center roll is difficult to access and also shorter, which reduces the benefit of triangular measurement, various points on the frame are usually preferred. An example of triangular measurement to the idler mounting pad is shown here but other locations on the idler set may be better.

WWW.BEARINGNET.ORG has issued this document (1690) on 09 Sep 2011 to Pattarapon Sukkool, Sudhuang (Thailand)

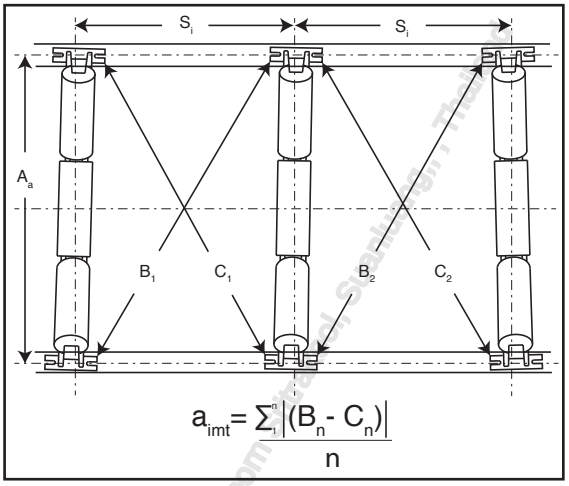

Figure 6.74
Triangulation method for aligning idlers

$$\Delta A_{ei} = \arctan\left[1.0 - \frac{a_{imt}}{\left(A_a^2 + s_i^2\right)}\right]$$

Equation 6.75
A_{ei}, From triangulation measurements

Measurement of typical installations, especially as affected by belt width, and precise installations specifications including quality control may be warranted to obtain a reliable prediction of this often under-appreciated loss category. To obtain the average ΔA_{ei} for a group of idlers or a flight,average the sum the absolute values of e_{imt}. Values may range from 0.5 in (13 mm) for tape measurements to less than 0.06 in (1.5 mm) for laser measured installations.

The values of misalignment used in the above equations should be the actual or expected average values. The suggested worst case defaults are provided below for consistency but these values will vary and should be altered if specific information on actual practice is available. In particular ΔA_{ei} can and should be less than the default values provided since it is the largest and most easily improved during or after installation. Appendix D, Conveyor Installation Standard, says never knock an idler more than 0.25 in (6.4 mm) but field measurements and experience indicate that idlers are frequently installed in new installations without measuring or intentionally knocked more than 0.25 in (6.4 mm) even though this may trade tracking for increased drive tension.

Manufacturing Misalignment

Manufacturers typically do not control the ΔA_{em} value except through the tolerance of their fabrication equipment. Use 0.1 in (2.5 mm) for typical variation between YZ plane of wing roller and YZ plane of center roller. Actual values should be used if available. Benchmarks, on the idler frame for idler alignment may be beneficial but do not imply the actual ΔA_{em} tolerance is negligible. Obtain data for critical applications from a CEMA Member idler manufacturer and the installer.

www.CEMA.ORG has set this document (6E Ajun Ari 2A, 2017 to Paperapprovaled, Stanhope, Thailand

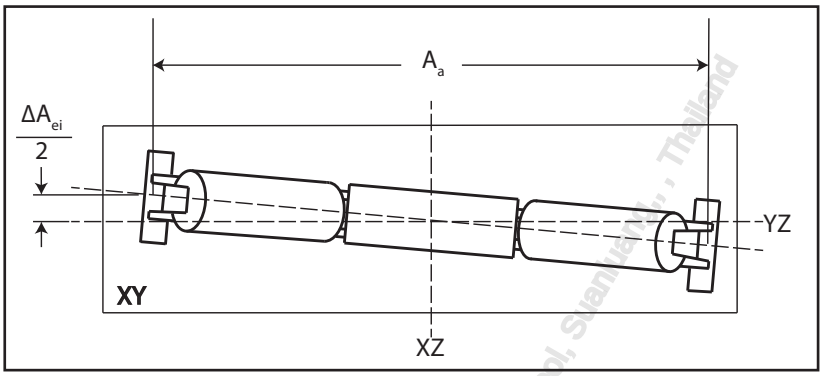

Figure 6.76
ΔA_{ei}, Idler misalignment perpendicular to belt travel plane, XZ

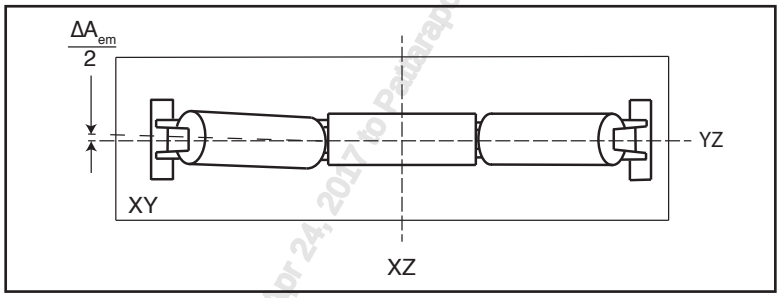

Figure 6.77
ΔA_{em}, Individual wing roll angular misalignment from plane YZ due to manufacturing tolerances

Idler Tilt

Tilting the idler in the direction of belt travel is sometimes done in the YZ plane to aid in belt tracking at the expense of power. Tilting misaligns the wing roll idlers from the center roll. While both wing rolls encourage the belt to move to the center for a load rebalancing effect, the belt constantly slides on the wing roll in doing so.

$$\Delta A_{et} = 2 \times \frac{A_{wc}}{A_a} \times a_{it} \times \tan(\beta) \times A$$

Equation 6.78
ΔA_{et}, Effective misalignment due to idler tilt for fixed frame idlers

Where:

A = Conveyed load cross section. Ref. Equation 6.151 [ft^2 (m^2)]

A_a = Idler mounting bolt centers [(ft (m)]

Note: In CEMA Standard 502 this is dimension A.

A_{wc} = Cross section of load above the wing rollers [ft^2 (m^2)] See Equation 6.80

a_{it} = Idler tilt misalignment from plane XZ [in/in (mm/mm)] or tangent of the tilt angle

WWW.CEMANET.ORG has issued this document (1460) on Apr 24, 2017 to Pattarapom Sirirakool, Stanley , , Thailand

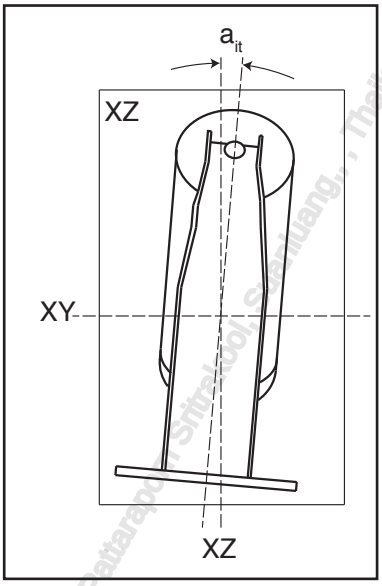

Figure 6.79
ΔA_{et}, Idler misalignment tilted, a_{it}, from plane XZ in direction of belt travel

$$A_{wc} = B_w^2 \times \left[r_{sch}^2 \times \left(\frac{\varphi_c}{2} - \frac{\sin(\varphi_c) \times \cos(\varphi_c)}{2} \right) + \left(b_{wmc}^2 \times \frac{2 \times \sin(\beta) \times \cos(\beta)}{2} \right) \right]$$

Equation 6.80
A_{wc}, Load cross sectional area above wing rolls

Where:

$$\varphi_c = \arcsin\left(\frac{b_c}{2 \times r_{sch}} \right)$$

b_c, b_w, b_{wmc} and r_{sch} are ratios used to define load cross section See Figure 4.24

For equal roll idlers a default value of 1/6 for A_{wc}/A_s, which estimates the portion of the load carried by the wing rolls, can be used throughout. Note that the tension required to overcome idler tilt varies strongly with the load on the wing roll and the actual load should be calculated and used for precise prediction of tension changes.

Note that lateral alignment is integral to sound, well aligned structure but does not have the major impact on resistance to movement that angular alignment does. Vertical misalignment must be considered in the idler selection process as it can place additional loads on individual idler sets. Additional quality control and precise installation specifications may be warranted to obtain a reliable prediction of this loss category. Even if the angular alignment is well known, a range of R_{rim} = 0.67 to 1.0 addresses the friction factor, C_{bi}, and the possibility of low loss due to environmental conditions and wear. Use R_{rim} = 0.67 for regenerative flights. Obtain data for critical applications from a CEMA Member idler manufacturer and the installer.

www.CEMA.org. All rights reserved. This document (1460) on April 24, 2020 by Patcharaporn Srimokol, Suphanburi, Thailand

For flight n = 2:

C_{bi} = 0.50 L_2 = 500 ft W_b = 26.3 lb/ft W_m = 138.9 lb/ft

A_a = BW (in) + 9.0 in = 48.0 in + 9.0 in = 57.0 in R_{rim} = 1.0

ΔA_{ei} = 0.25 (in) ΔA_{ei} = 0.25 deg. ΔA_{em} = 0.1 (in) a_{it} = 0 ΔA_{et} = 0.0 (in)

$$\Delta A_{ei} = \frac{\Delta A_{ei}}{2} + \tan\left(\frac{\Delta a_{ei}}{2}\right) \times A_a = \frac{0.25 \text{ in}}{2} + \tan\left(\frac{0.25}{2}\right) \times A_a = 0.125 + 0.002182 \times 57 \text{ in} = 0.249 \text{ in}$$

$$\Delta A_e = \Delta A_{ei} + \Delta A_{em} + \Delta A_{et} \text{ (in)} = 0.249 + 0.1 + 0.0 = 0.349 \text{ in}$$

$$a_{im} = \frac{\Delta Ae}{A_a} = \frac{0.349 \text{ (in)}}{57.0 \text{ (in)}} = 0.00612$$

$$C_{im} = C_{bi} \times a_{im} = 0.5 \text{ x } 0.00612 = 0.00306$$

$$\Delta T_{im2} = C_{im} \times L_2 \times (W_b + W_m) \times R_{rim}$$

$$\Delta T_{im2} = 0.00306 \times 500 \text{ ft} \times (165.2 \frac{\text{lbf}}{\text{ft}}) \times 1.0 = 252.8 \text{ lbf (114.8 kgf)}$$

Figure 6.81
ΔT_{im2}, Example idler misalignment calculation

Garland Idler

A similar phenomenon to that which causes misalignment from idler tilt, ΔA_{et}, occurs with garland or suspended idler sets. Note that these idlers are hung from the conveyor framework and are free to swing in the direction of belt movement. In this case, the total resistance to belt movement at the idler causes a similar misalignment to a_{it}, though it is self induced and the idler tilts in the opposite direction. The calculation of resistance, ΔT_{gmn}, due to the swinging action of the garland frame is similar to that for ΔT_{imn} but must be done after all of the other Main Resistances from this section are calculated. This procedure must be iterative as described in the Tension Management Section, since ΔT_{gmn} affects, and is affected by, ΔT_{sn}. The basic calculation proceeds as follows:

$$\Delta T_{gmn} = C_{mg} \times L_n \times (W_m + W_b) \times R_{rgm}$$

Equation 6.82
ΔT_{gmn}, Misalignment resistance from garland idlers

Where:

ΔT_{mgn} = Tension loss in flight "n" from self misalignment of garland idler [lbf (kgf)]

$C_{mg} = 2 \times \frac{A_{wc}}{A_a} \times C_{bi} \times a_g \times \tan(\beta)$ Design frictional resistance from idler self alignment (dimensionless)

C_{bi} = Sliding friction factor for roll on belt cover (dimensionless)

W_i = Swinging weight of idler

$a_g = \frac{\Delta T_{ni}}{[(W_m + W_b) \times S_i + W_i]}$ (dimensionless)

$\Delta T_{ni} = \frac{\Delta T_n}{\frac{L_n}{S_i}}$ Total tension loss from 'main resistances' in flight "n" per idler [lbf (kgf)]

R_{rmg} = 1.0

WWW.CEMA-ET.ORG has issued this document (6.6A) on Apr 24, 2017 to Pattaraporn Sritrakool, Suanluang, , , Thailand

Slider Bed/Impact Cradle

Fixed sliding surfaces or slider beds are sometimes used instead of idlers to support the belt and load. The sliding resistance varies widely with moisture, slider material and belt cover but the following design method should provide safe results for conveyor flights supported by sliding friction. The default value for R_{rsb} is 1.0 but when starting under full load use R_{rsb}=1.50.

$$\Delta T_{sbn} = C_{sb} \times (W_b + W_m) \times L_n \times R_{rsb}$$

Equation 6.83
ΔT_{sbn}, Slider bed resistance

Where:

ΔT_{sbn} = Tension loss for slider bed(s) in flight "n"
C_{sb} = Sliding friction factor (dimensionless) Table 6.84
R_{rsb} = Modifying Factor

Sliding Surface	C_{sb}
Steel	0.64 to 0.84
Polyethylene	0.56
Urethane	0.60 to 0.67

Table 6.84
C_{sb}, Slider bed sliding friction coefficients

Skirtboard Friction

When the bulk material is constrained so that it slides on vertical skirtboards, the force required to overcome skirtboard friction is normally larger per unit length of skirtboarded conveyor than the force to move the loaded belt over the idlers. When the total conveyor length is many times the length of the skirtboards, the additional power requirements for the skirtboards is relatively small. However, if a large portion of the conveyor is equipped with skirtboards, the additional belt pull required may be a major factor in the effective tension required to operate the conveyor.

The skirtboard resistance is calculated as sliding Coulomb friction of the bulk material on the skirting. It is determined from the total force of the material against the skirtboard, then multiplying this value by the appropriate coefficient of friction of the material handled. The total normal force against the skirtboard varies with the depth of material, the material weight and its internal friction angle

The pressure of the material against the skirtboard can be calculated with the wedge of material contained between a vertical skirtboard and the angle of surcharge of the material supported by both the skirt-board and the belt. The calculation for ΔT_{sn} assumes two equal skirted lengths in flight n.

$$\Delta T_{sn} = C_s \times D_{ms}^2 \times L_n \times R_{rs}$$

Equation 6.85
ΔT_{sn}, Tension due to material sliding against skirtboard pairs

www.CEMACON.ORG - Emanuel Luis Siqueira (14604) on 04-24-2020 to Petcharapon Thitrakool, Suan Sunandha, , Thailand

Where:

$$C_s = \gamma_m \times \frac{1-\sin(\Phi_r)}{1+\sin(\Phi_r)} \times \mu_s \quad \left[lbf/(ft-in^2)\ (kgf/(m-mm^2))\right]$$

μ_S = Sliding friction coefficient between skirboard and bulk material

Note: Equation is provided for reference. Use Table 6.88 values when possible.

$$D_{ms} = \frac{A - 0.25 \times (W_s^2 - B_c^2) \times \tan(\beta) - 0.25 \times W_s^2 \times \left[\frac{\Phi_s}{\sin(\Phi_s)^2} - \cot(\Phi_s)\right]}{W_s}$$

Equation 6.86

D_{ms}, Contact depth of material on skirtboards

Where:

$$A = \frac{Q}{V \times \gamma_m} \quad [ft^2(m^2)]$$

γ_m = Bulk density of the material [lbf/ft^3(kgf / m^3]

Φ_s = Material surcharge angle. (degrees when used with a trig function, radians when used without a trig function)

W_s = Skirtboard spacing [ft (m)]

D_{ms} = Depth of material sliding on skirtboards [in (mm)]

When D_s is equal to or less than zero, there is no drag as a result of material contact and $\Delta T_{sn} = 0$.

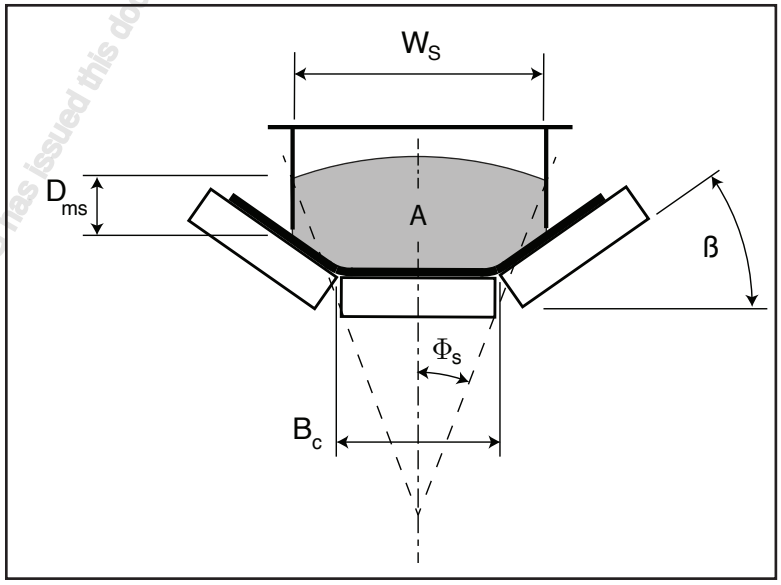

Figure 6.87

Depth of material on skirtboard

WWW.CEMANET.ORG has issued this document (1-604) on April 6, 2017 to Pattarapom Sritrakool, Guardian Belt Thailand

Load independent skirt seal friction must also be added as described elsewhere. If the flight length is greater than the skirt length which constrains material, this calculation can be used for a point source loss with the skirted conveyor length substituted for L_n. For skirtboards of material other than smooth steel, C_s, can be corrected using the ratio of the experimentally determined wall friction coefficient or estimated as the pressure against the skirtboard, the angle of repose and the bulk density from the equation in the 6.85 "Where" box.

Bulk Material	C_s Factor lbf/(ft-in^2)	C_s Factor kgf/(m-mm^2)
Alumina, pulverized, dry	0.121	10.810
Ashes, coal, dry	0.057	5.092
Bauxite, ground	0.188	16.795
Beans, navy, dry	0.08	7.147
Borax	0.073	6.521
Bran, granular	0.024	2.144
Cement, Portland, dry	0.212	18.939
Cement clinker	0.123	10.988
Clay, ceramic, dry fines	0.092	8.219
Coal, anthracite, sized	0.054	4.824
Coal, bituminous, mined	0.075	6.700
Coke, ground fine	0.045	4.020
Coke, lumps and fines	0.019	1.697
Copra, lumpy	0.02	1.787
Cullet	0.084	7.504
Flour, wheat	0.027	2.412
Grains, wheat, corn or rye	0.043	3.841
Gravel, bank run	0.115	10.274
Gypsum, 1/2" screenings	0.09	8.040
Iron ore, 200 lbf/ft^3	0.276	24.657
Lime, burned, 1/8"	0.117	10.452
Lime, hydrated	0.049	4.377
Limestone, pulverized, dry	0.128	11.435
Magnesium chloride, dry	0.028	2.501
Oats	0.022	1.965
Phosphate rock, dry, broken	0.018	1.608
Salt, common, dry, fine	0.081	7.236
Sand, dry, bank	0.137	12.239
Sawdust, dry	0.008	0.715
Soda ash, heavy	0.07	6.253
Starch, small lumps	0.062	5.539
Sugar, granulated dry	0.034	3.037
Wood chips, hogged fuel	0.009	0.804

Table 6.88
Skirtboard friction factors against smooth steel skirtboards

WWW.CEMANET.ORG has issued a non-exclusive, non-transferable licence (2015-04) on April 24, 2017 to Pattarapon Srisakool, Siam Cement Group, , Thailand

$$A = \frac{Q}{V \times \gamma_m} = \frac{2500\ \text{tph} \times 2000\ \text{lb/t}}{600\ \text{fpm} \times 90\ \text{lb/ft}^3 \times 60\ \text{min/h}} = \frac{5{,}000{,}000\ \text{lb/h}}{3{,}240{,}000\ \text{lb/ft}^2\text{-h}} = 1.543\ \text{ft}^2$$

$$b_c = \frac{0.371 \times BW + 0.25}{BW} \quad B_c = b_c \times BW = \frac{0.371 \times 48.0 + 0.25}{48.0} \times 48.0 = 18.06\ \text{in}$$

$\Phi_s = 20$ degrees $= 0.3491$ radians : $\sin(20) = 0.3420$, $\cot(35) = 2.7475$

$\beta = 35$ degrees : $\tan(35) = 0.7002$

$$W_s = \frac{2}{3} \times BW = \frac{2 \times 48\ \text{in}}{3} = 32\ \text{in}$$

$$D_{ms} = \frac{A \times 144 - 0.25 \times (W_s^2 - B_c^2) \times \tan(\beta) - 0.25 \times W_s^2 \times \left[\frac{\Phi_s}{\sin(\Phi_s)^2} - \cot(\Phi_s)\right]}{W_s}$$

$$D_{ms} = \frac{1.543\ \text{ft}^2 \times 144\ \text{in}^2/\text{ft}^2 - 0.25 \times ((32\ \text{in})^2 - (18.06\ \text{in})^2 \times \tan(35) - 0.25 \times (32\ \text{in})^2}{32\ \text{in}}$$

$$\times \left[\frac{.3491}{(0.3420)^2} - (2.7475)\right] = \frac{}{32\ \text{in}}$$

$$D_{ms} = \frac{222.2\ \text{in}^2 - 174.5\ \text{in}^2 \times 0.7002 - 256\ \text{in}^2 \times 0.237}{32\ \text{in}} = \frac{39.343\ \text{in}^2}{32\ \text{in}} = 1.23\ \text{in}$$

$C_s = 0.120\ \text{lbf/in}^2\text{-ft}$

$L_1 = 15\text{ft}$

$\Delta T_{s1} = C_s \times D_{ms}^2 \times 2 \times L_1 \times R_{rs}$

$R_{rs} = 1.0$

$\Delta T_{s1} = 0.120\ \text{lbf/in}^2\text{-ft} \times (1.23\ \text{in})^2 \times 2 \times 15\ \text{ft} \times 1.0 = 5.4\ \text{lbf}\ (2.5\ \text{kgf})$

Figure 6.89
ΔT_{s1}, Example skirtboard friction calculation

www.conveyor-belt-guide.com This document is copyrighted. © Apr 24, 2017 to Pattarasak Shirakul, Suanluang, Thailand

Load and Tension Dependent Friction

The tension change between idlers is affected by the local tension in several ways. The load on idlers can be affected when there is vertical misalignment of adjacent idler sets. The internal movement of the load creates additional resistance to movement of the belt. The potential for material lifting off of the idlers can add additional resistance after a critical speed is reached. These are examples of resistances that are affected by the load and tension.

Idler Load due to Vertical Misalignment

Chapter 5 describes the idler selection process using the idler load rating. One of the loads to consider is vertical misalignment of adjacent idler sets which places additional loads on individual idlers. Idlers that are higher than adjacent idlers see higher loads through the belt tension resultant load. The result is that a higher load rated idler may be required. Therefore, vertical misalignment has an indirect effect on belt tension and resistance to movement.

The additional load on the idler is a function of the weight of the belt and material, idler spacing and the belt tension. Ref. Equations 5.25 and 5.26 and Figure 5.27. Appendix D recommends no more than 0.125 inch (3 mm) variation in idler support structure height variation so this value is used as the default value. In some applications, as discussed in the idler misalignment section, vertical misalignment is more or less pronounced than others. Actual values should be used whenever possible.

$$CIL = \left(\left(W_b + \left(W_m \times K_1\right)\right) \times S_{in}\right) + IML \quad \text{(Ref. Equation 5.25)}$$

$$IML = \frac{2 \times d \times T_{max}}{S_{in}} \quad \text{(Ref. Equation 5.26)}$$

$d = 0.125$ in $\quad T_{max} = 40{,}707$ lbf $\quad S_{i2} = 5.0$ ft

$W_m = 138.9$ lbf $\quad W_b = 26.3$ lbf $\quad K_1 = 1.1$ (Ref.Table 5.29)

$$IML = \frac{2 \times d \times T_{max}}{S_{i7}} = \frac{2 \times 0.125 \text{ in} \times 40{,}707 \text{ lbf}}{5.0 \text{ ft} \times 12\frac{\text{in}}{\text{ft}}} = 169.6 \text{ lbf}$$

$$CIL = \left(\left(W_b + \left(W_m \times K_1\right)\right) \times S_{in}\right) + IML = \left(\left(26.3\frac{\text{lbf}}{\text{ft}} + 152.8\frac{\text{lbf}}{\text{ft}}\right) \times 5.0 \text{ ft}\right) + 169.6 \text{ lbf} = 1065.1 \text{ lbf}$$

Initial selection was CEMA C5 idlers with a load rating of 900 lbf

Final selection requires CEMA D6 idler with a load rating of 1200 lbf

Figure 6.90
CIL, Idler vertical misalignment load example

Effect of Belt Sag Between Idlers

The belt sags in the span between adjacent idlers due to the belt and material load being supported similar to a catenary. See Fig 6.91. The sag causes material deformation and energy loss. The sag of the belt and the path of the bulk material is affected by the particular belt tension at the point in question. Therefore, the tension and tension loss are interrelated so that predicting the sag and tension change becomes a related iterative process as discussed as tension management. The calculation is considered for a particular known tension, T_n, at the point in question

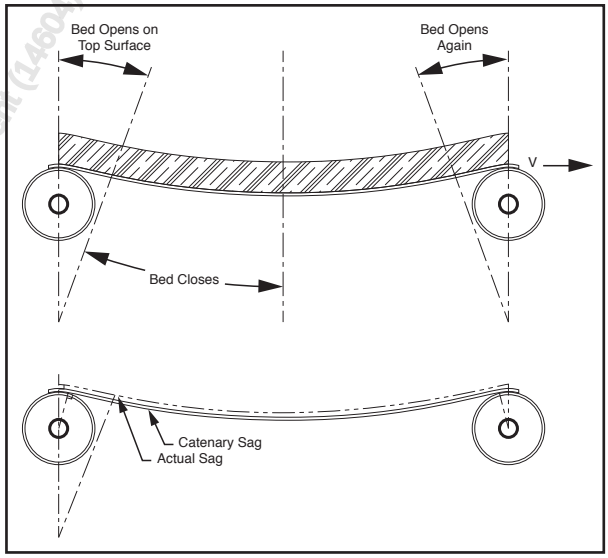

Figure 6.91
Material deformation caused by belt sag

WWW.CEMANET.ORG has issued this document (14604) on Apr 23, 2014 to Supraporn Srisawat, Suanlung, , , Thailand

Material Trampling Loss

The belt sag causes the individual particles of bulk material to repeatedly move against each other as they progress from one idler to the next, with consequent energy loss due to internal friction. Energy must be added through the material depth to overcome the internal friction forces as the material closes on itself between an idler and the point of maximum sag at the center of the idler spacing. A portion of this energy is recovered as the bed depth opens up again in the section from mid span to the idler. Note that there is no net elevation change and therefore no potential energy change between idlers.

The energy loss is influenced by bed depth, the belt sag, and the material strength. In the equations that follow bed depth is calculated as the maximum depth on the center roll per the load cross section geometry described in Chapter 4. Table 6.88 provides a material friction parameter, C_{mz}, for the different material Flowability categories described in Chapter 3 as characterized by the angle of repose, Φ_r, which is an estimate of the internal angle of friction.

The amount and shape of the belt sag is primarily influenced by the material weight, the belt tension and the idler spacing, as in the catenary calculation, but also by the resistance to vertical deflection as the troughed belt supports the load similar to a beam with cross sectional stiffness. The calculation is further complicated since the belt does not act purely as a classic beam but also as a set of flat plates that are formed with the center roll and wing rolls. In the tension equations, the primary influences are incorporated but their variations are part of the justification for a Modifying Factor in a basic calculation of the net work done on the material or energy loss. The unique influences of belt modulus and construction on the undulations in the vertical axis, Z, of the belt are incorporated with a Modifying Factor, R_{mz}, to apply to a range of applications. The significantly less deformation for steel cable belts, due to their inherent stiffness, is evident in these equations.

In contrast to the previous "friction" calculations with material loading where work is the result of a friction force acting through a distance, the following develops the work or energy loss since the load dependency is not simple.

$$\Delta T_{mzn} = \frac{W_{mzn} \times L_n}{S_{in}^2} \times R_{rmz}$$

Equation 6.92

ΔT_{mzn}, Tension loss in flight n from internal movements in the bulk material

$$W_{mzn} = D_m^3 \times \gamma_m \times C_{mz} \times BW \times \left[\exp\left[(W_b + W_m) \times \frac{S_{in}}{T_n} \right] - 1 \right] \times \exp\left[\frac{-1}{2} \times (W_b + W_m) \times \frac{S_{in}}{T_n} \right] \times R_{mz}$$

Equation 6.93

W_{mzn}, Belt work required to cause material movement from one idler to the next

$$\Delta y_{sn} = \frac{S_{in} \times (W_b + W_m)}{8 \times T_n} \times 100 \ (\%)$$

Note: If $\Delta y_{sn} > 4\%$, use $\Delta y_{sn} = 4.0\%$

Equation 6.94

Δy_{sn}, Average catenary belt sag for flight n as % of the idler spacing

WWW.CEMANET.ORG has issued this document (1460) to ARI 4 NATION pursuant Strategic Licensing Agreement

$$R_{mz} = \frac{1}{12} e^{\left[4.181 - 1.572 \times \left[\frac{BW}{S_{in}}\right]^{1.5} - 1.0827 \times \Delta y_{sn}^{0.5}\right]}$$ (dimensionless) For troughed fabric carcass belts

$$R_{mz} = \frac{1}{12} e^{\left[4.966 - 4.071 \times \left[\frac{BW}{S_{in}}\right]^{0.5} - (1.062 \times 10^{-2}) \times \Delta y_{sn}^{-1.0}\right]}$$ (dimensionless) For troughed steel cable belts

$$R_{mz} = \frac{1}{12}$$ (dimensionless) For all belts when flat

Equation 6.95

R_{mz}, Correction between actual sag and theoretical catenary sag

Where:

D_m = Material depth at center of belt
C_{mz} = Net friction loss per table 6.97 (dimensionless)
R_{rmz} = Modifying factor
T_n = Belt tension in flight "n"

Flowability (Table 3.3)	Angle of Repose (deg)	C_{mz}
Very Free Flowing	0 to 19	1.5
Free Flowing	20 to 25	2.1
Average Flowing	26 to 29	2.5
Average Flowing	30 to 34	3.3
Average Flowing	35 to 39	4.2
Sluggish	40 to 45	5.7

Table 6.96

C_{mz}, Material friction factor (dimensionless)

WWW.CEMANET.ORG has issued this document to [illegible] on October 24, 2013 for Personal Use from Srinakool, Suvarnabhumi, , Thailand

S_{i2}= 5.0 ft Average $T_2=\frac{(13{,}098+16{,}420)}{2}$ lbf = 14,759 lbf W_b= 26.2 lb/ft W_m= 138.9 lb/ft BW = 48 in

A = 1.54 ft^2 L_2= 500 ft β =35 deg : sin(35) = 0.5736, cos(35) = 0.8192

Φ_s= 20 deg : sin(20) = 0.3420, cos(20) = 0.9397, Radians = 0.3491

$$\Delta y_{s2}=\frac{S_{i2}\times(W_b+W_m)}{8\times T_2}\times 100=\frac{5.0\text{ ft}\times(26.2\text{ lbf/ft}+138.9\text{ lbf/ft})}{8\times 14{,}759\text{ lbf}}\times 100=7.0\%\therefore\text{ use }\Delta y_{s2}=4.0\%$$

$$R_{mz}=\frac{1}{12}e^{\left[4.181-1.572\times\left[\frac{BW}{S_{i5}}\right]^{1.5}-1.0827\times\Delta y_{s5}^{0.5}\right]}=\frac{1}{12}e^{\left[4.181-1.572\times\left[\frac{48\text{ in}}{4.0\text{ft x }12\text{ in/ft}}\right]^{1.5}-1.0827\times\Delta y_{s5}^{0.5}\right]}$$

$$R_{mz}=\frac{1}{12}e^{[1.938]}=\frac{8.5908}{12}=0.7159$$

$D_m = d_m \times BW$

$$d_m = b_{wmc}\times\sin(\beta)+\left[\frac{\frac{b_c}{2}}{\sin(\Phi_s)}+\frac{\cos(\beta)\times b_{wmc}}{\sin(\Phi_s)}\right]\times(1-\cos(\Phi_s))$$

From Chapter 4 :

$$a=\frac{\cos(\beta)^2}{\sin(\phi_s)^2}\times(\phi_s-\sin(\phi_s)\times\cos(\phi_s))+\cos(\beta)\times\sin(\beta)=$$

$$a=\frac{0.6608}{0.1170}\times(0.3491-0.3214)+0.4699=0.629$$

$$b_c=\frac{0.371\times BW+0.25}{BW}=0.376$$

$$b=b_c\times\sin(\beta)+b_c\times\frac{\cos(\beta)}{\sin(\Phi_s)^2}\times(\Phi_s-\sin(\Phi_s)\times\cos(\Phi_s))$$

$$b=0.2157+2.633\times(0.3491-0.3214)=0.289$$

$$c=-\frac{A}{BW^2}+\frac{1}{4}\text{ x }\frac{b^2{}_c}{\sin(\Phi_s)^2}\times(\Phi_s-\sin(\Phi_s)\times\cos(\Phi_s))$$

$$c=-\frac{1.54\text{ ft}^2}{\frac{384\text{ in}^2}{144\frac{\text{in}^2}{\text{ft}^2}}}+0.3022\times(0.3491-0.3214)=-0.088$$

$$b_{wmc}=\frac{-b+(b^2-4\times a\times c)^{0.5}}{2\times a}=\frac{-0.289(0.289^2-4\text{ x }0.629\times-0.088)^{0.5}}{2\times 0.629}=0.21$$

$$b_d=b_{wmc}\times\sin(\beta)+\left[\frac{\frac{b_c}{2}}{\sin(\phi_s)}+\frac{\cos(\beta)\times b_{wmc}}{\sin(\phi_s)}\right]\times(1-\cos(\Phi_s))=0.184$$

$D_m = d_m \times BW = 0.184 \times 48\text{ in} = 8.83\text{ in}$

$$W_{mz2}=D_m^3\times\gamma_m\times C_{mz}\times BW\times\left[\exp\left[(W_b+W_m)\times\frac{S_{in}}{T_n}\right]-1\right]\times\exp\left[\frac{-1}{2}\text{x }(W_b+W_m)\times\frac{S_{in}}{T_n}\right]\times R_{mz}=18.86\text{ ft-lbf}$$

$$\Delta T_{mz2}=\frac{W_{mz2}\times L_2}{S_{i2}{}^2}=\frac{18.86\text{ ft-lbf}\times 500\text{ ft}}{25\text{ ft}^2}=377.2\text{ lbf }(171.2\text{ kgf})\quad\text{or}\quad\frac{W_{mz2}}{S_{i2}^2}=0.75\frac{\text{lbf}}{\text{ft}}\ \left(1.12\frac{\text{kgf}}{\text{m}}\right)$$

WWW.CEMA-ET.ORG was issued this document (1.2.04) on Apr 25, 2011 to Pattaroom Sritrakool, Chuanchang, , Thailand

Figure 6.97
Example ΔT_{mz3} calculation of material trampling loss

Lift Off Critical Speed

Under conditions of high sag and high belt speed the bulk material can be launched slightly into the air landing back on the belt at a slightly different angle than the sagged belt path. The effect is a small impact of the full material stream with consequent energy loss equal to this angular difference times the vertical component of the Kinetic Energy of the bulk material. In addition to energy loss, operation under this condition causes loss of control of the material as it splashes back onto the belt, additional idler loading from this lifting action, wear of the belt and material degradation. Various degrees of these effects can be expected at conditions nearing liftoff as the load redistributes in a reduced gravity field. In particular, dust can often be seen being exhausted from the expanding and collapsing material bed.

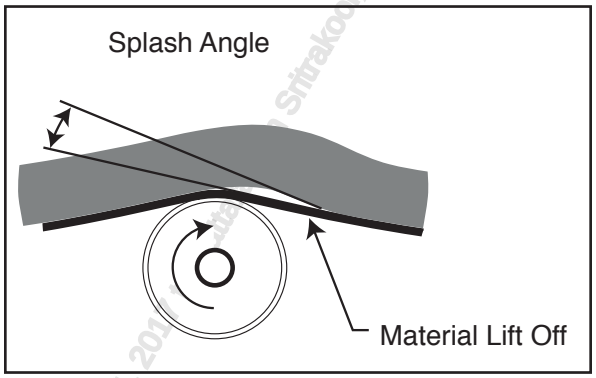

Figure 6.98
Material trajectory when $V > V_c$

A loss coefficient for this phenomena can be calculated by plotting the belt path and material trajectory. Since operating under this condition is not considered good standard practice, the following calculation instead provides the maximum belt speed for liftoff not to occur and are therefore the belt speeds which are within the scope of this chapter:

$$V_{cn} = \left[\frac{g}{c_{1n} \times (S_{in} \times c_{3n} - 2.0)} \right]^{0.5}$$

Equation 6.99
V_{cn}, Critical belt speed to prevent material lift off over idlers

$$c_{1in} = \frac{\frac{(W_b + W_m)}{0.371}}{8 \times T_n}$$

Equation 6.100
C_{1in}, Factor

WWW.CEMANET.ORG has issued this document (...) on Aug 04, 2014 (...) Sritrakool, Sakhonnakhon, Thailand

$$c_{1n} = \frac{5}{\left[233.67 + \frac{0.255}{c_{1in} \times c_{in}} + \frac{64.3745}{\left[\frac{BW}{S_{in}}\right]^2}\right] \times c_{in}}$$

$$c_{3n} = \frac{1.8123 - 0.004476 \times \left(\frac{E_b}{c_{piw}}\right)^{0.5} - \frac{558.3}{\left(\frac{E_b}{c_{piw}}\right)^{1.5}}}{c_{in}}$$

Equation 6.101
C_{in} and C_{3n}, Factors for equation 6.100 for fabric belts

$$c_{in} = \frac{\left[0.000119 + \frac{0.1127 \times c_{piw}}{\frac{T_n}{BW}}\right]}{c_{in}}$$

$$c_{3n} = \frac{0.122 - 0.0000104 \times \frac{\frac{T_n}{BW}}{c_{piw}} + 0.060 \times \frac{BW}{S_{in}}}{c_{in}}$$

Equation 6.102
c_{in} and c_{3n}, Factors for equation 6.100 for steel cable belts

Where:

c_{piw} = 1.0 lbf/in (175.1 N/mm)
E_b = Longitudinal belt modulus
g = Acceleration due to gravity
T_n = Tension in flight "n"

Belt speeds slightly higher than those calculated for V_{cn} have only minor penalties of power and abrasion. When dusting is a concern, speeds higher than those calculated allow the material stream to separate from the belt and expel fines as the material stream collapses downstream of each idler. The situation will dictate the desired limit to operating belt speed but, in general, it should be within +/-10% of V_{cn}.

With reference to the example conveyor, note that with close idler spacing in Flight 1 and equal spacing along the rest of the conveyor, it is clear that flight 2 can have the lowest V_{c2} even if T_1 is less since it parallels the sag calculation.

WWW.CEMANET.ORG has issued this document (1.2.04) on Apr 24 2017 to Pattarapon Sriwatcha, Suanluang, Thailand

$BW = 48\ in \quad E_b = 70{,}000\ lbf/in \quad g = 32.2\ ft/s^2 \quad (W_m + W_b) = 165.2\ lbf/ft$

$S_{i2} = 5.0\ ft \quad T_{m2} = 14{,}759\ lbf \quad c_{in} = 1.0\ in \quad V = 600\ \frac{ft}{min}$

$$c_{ti2} = \frac{\frac{(W_m + W_b)}{0.371 \times BW}}{8 \times \frac{T_{m2}}{BW}}$$

$$c_{ti2} = \frac{\frac{(W_m + W_b)}{0.371 \times BW}}{8 \times \frac{T_{m2}}{BW}} = \frac{165.2\frac{lbf}{ft} \times \frac{1}{12}\frac{ft}{in}}{17.808\ in \times \frac{14{,}759\ lbf}{48\ in}} = \frac{13.766\frac{lbf}{in}}{2{,}459.833\frac{lbf}{in}} = \frac{0.7731}{2{,}459.833\ in} = 0.000314\ in^{-1}$$

$$c_{12} = \frac{1}{\left[233.67 + \frac{0.255}{c_{tin} \times c_{in}} + \frac{64.3745}{\left[\frac{BW}{S_{i2} \times 12}\right]^2}\right] \times c_{in}}$$

$$c_{12} = \frac{1}{\left[233.67 + \frac{0.255}{c_{ti2} \times c_{in}} + \frac{64.3745}{\left[\frac{BW}{S_{i2} \times 12}\right]^2}\right] \times c_{in}} = \frac{1}{233.67 + \frac{0.255}{0.000314} + \frac{64.3745}{\left(\frac{48}{60}\right)^2}} = \frac{1}{233.67 + 812.102 + 100.585} = 0.00087\frac{1}{in}$$

$$c_{32} = 1.8123 - 0.004476 \times \left(\frac{E_b}{c_{piw}}\right)^{0.5} - \frac{558.3}{\left(\frac{E_b}{c_{piw}}\right)^{1.5}}$$

$$c_{32} = 1.8123 - 0.004476 \times 264.575 - \frac{558.3}{18{,}520{,}259.2} = 0.628\ \frac{1}{in}$$

$$V_{c2} = \left[\frac{g}{c_{12} \times (S_{i2} \times c_{32} - 2.0)}\right]^{0.5} \times R_{rc} = \left[\frac{32.2\frac{ft}{s^2} \times \frac{12\ in}{ft}}{0.00087\frac{1}{in} \times \left(5\ ft \times \frac{12\ in}{ft} \times 0.628\frac{1}{in} - 2.0\right)}\right]^{0.5} \times R_{rc} =$$

$$V_{c2} = \left[\frac{386.4\frac{in}{s^2}}{0.00087\frac{1}{in} \times 35.68}\right]^{0.5} = \left[12{,}447.8\frac{in^2}{s^2}\right]^{0.5} = 111.57\frac{in}{s}$$

$V_{c2} = 557.9\ fpm\ (2.83\ m/s)$

V_{c2} is within 10% of V = 600 fpm, so lift off is unlikely. Therefore no additional power loss is expected due to lift off losses.

Figure 6.103
Example calculation of V_{cn}, minimum belt velocity for material lift off

Point Sources of Tension $\sum \Delta T_n$ Point

Like acceleration contributions, the following tension contributions to the belt can be looked at as step changes in tension even though the actual tension is changed over a small finite length. This category of tension effects is primarily associated with various mechanical components both by adding or removing tension. Passive energy consumers are discussed first for the sake of continuity, though active tension contributions are more important in the general scope of conveyor design.

Pulleys are primary sources of point changes in tension and are often considered as separate flights in series with the conveyance and return flights. When pulleys are analyzed as separate flights, the Main Resistances for those pulley flights are set to zero. Other than for pulleys, the resistances described below are added to the other energy and Main Resistances calculations.

www.CEMAEBOOKS.org - Issued to document (4004) on Apr 7, 2017 to Pattaraporn Sritrakool, Songkhla, , , Thailand

Pulleys as Passive Point Losses

Pulleys have a passive loss element that should be added independently of their role as sources of active tension change. These are due to belt slip and bending and from pulley bearing rotating resistance. The resistance of the belt to flexure over the pulleys is a function of the pulley diameter and the belt stiffness. The belt stiffness depends upon the ambient temperature and the belt construction but the effect may be simplified in calculations as in Equation 6.104. The resistance of the pulley to rotate is a function of pillow block bearing friction, lubricant, and seal friction. The pillow-block bearing friction depends upon the load on the bearings, but the lubricant and seal frictions generally are independent of load. Since the drive pulley bearing friction does not affect belt tension, it's contribution should not add to belt tension but should be included when determining the net active torques required of the motors, brakes and so on.

$$\Delta T_{pn} = (\Delta T_{pxn} + \Delta T_{prn}) \times R_{rp}$$

Equation 6.104

ΔT_{pn}, Tension added at pulleys from belt flexure and bearing resistance

Where:

ΔT_{pxn} = Tension added to the belt from the belt flexing over pulley "n"

x = subscript for ΔT_{pxn}: ["f" for fabric carcass belts; "s" for steel cable belt construction]

$$\Delta T_{pfn} = \left(F_{pfn} \times BW + 0.09 \times T_n\right) \times \frac{t_b}{D_{pn}}$$ For fabric carcass belts

Where: $F_{pfn} = 7.2 \frac{lbf}{in} \left(1260 \frac{N}{m}\right)$

$$\Delta T_{psn} = \left(F_{psx} \times BW + 0.12 \times T_n\right) \times \frac{t_b}{D_{pn}}$$ For steel cable belts

Where: $F_{psx} = 13.7 \frac{lbf}{in} \left(2400 \frac{N}{m}\right)$

$$\Delta T_{prn} = 0.01 \times \frac{d_{sn}}{D_{pn}} \times R_{pn}$$ Tension added due to bearings, lubricants and seals

D_{pn} = Pulley diameter for flight"n"
d_{sn} = Pulley shaft diameter for flight "n"
R_{pn} = Vector sum of belt tensions and pulley weight for flight "n"
R_{rp} = Modifying Factor
t_b = Conveyor belt thickness
T_n = Belt tension at pulley "n"

WWW.CEMANET.ORG has sold this document (1/604) on 24-01-2013 to Prapatsorn Sirikoolgasuwan (Thailand)

D_{p21} = 42.0 in d_{s21} = 5.9375 in t_b = 1.215 in W_p = 2,214 lbf R_{rp} = 1.0

$$T_{p21} = \frac{12{,}656 \text{ lbf} + 12{,}735 \text{ lbf}}{2} = 12{,}695.5 \text{ lbf} \quad \text{Fabric Belt } \therefore\ T_{pfx} = 7.2 \frac{\text{lbf}}{\text{in}}$$

$$\Delta T_{pf21} = \left(T_{pfx} \times BW + 0.09 \times T_{p21}\right) \times \frac{t_b}{D_{p21}} = \left(7.2 \frac{\text{lbf}}{\text{in}} \times 48 \text{ in} + 0.09 \times 12{,}695.5 \text{ lbf}\right) \times \frac{1.215 \text{ in}}{42.0 \text{ in}} =$$

$$\Delta T_{pf21} = (345.6 \text{ lbf} + 1{,}142.595 \text{ lbf}) \times 0.0289 = 43.0 \text{ lbf}$$

$$R_{p21} = \left[\left(T_{p21} \times 2.0\right)^2 + W_p^2\right]^{0.5} = \left[(12{,}695.5\text{lbf} \times 2.0)^2 + (2214\text{lbf})^2\right]^{0.5} = 25{,}487.3 \text{ lbf}$$

$$\Delta T_{pr21} = 0.01 \times \frac{d_{s21}}{D_{p21}} \times R_{p21} = 0.01 \times \frac{5.9375 \text{ in}}{42.0 \text{ in}} \times 25{,}487.3 \text{ lbf} = 36.0 \text{ lbf}$$

$$\Delta T_{p21} = (\Delta T_{pf21} + \Delta T_{pr21}) \times R_{rp} = (43.0 \text{ lbf} + 36.0 \text{ lbf}) \times 1.0 = 79 \text{ lbf } (35.9 \text{ kgf})$$

Figure 6.105
Example ΔT_{p21} pulley resistance calculation

Belt Cleaners

Many belt cleaning devices add directly to the belt pull as they scrape on the belt. The tension loss required for belt cleaning devices varies widely due to diversity in design and consequent differences in cleaning forces and friction factors. The following provides a basic calculation of individual cleaner resistances the summation for various multiple cleaners. The values provided can be used in lieu of data from the manufacturer on specific cleaning system being used.

$$\Delta T_{bcn} = BW \times \sum\nolimits_m C_{bcm} \times R_{rbc}$$

Equation 6.106
ΔT_{bcn}, Tension added by belt cleaners in flight "n"

Where:

$C_{bcm} = \mu_{bcm} \times F_{bcm}$ Frictional resistance of belt cleaner "m" in flight "n"
F_{bcm} = Effective normal force between belt cleaner "m" blade(s) and belt in flight "n"
m = Number of belt cleaners in flight "n"
μ_{bcm} = Coefficient of friction between belt cleaner "m" blade(s) and the belt in flight "n"
R_{rbc} = Modifying Factor
Note: It is common to use multiple belt cleaners of different styles within the same flight. Each belt cleaner must be analyzed separately and the total effect summed.

Accurate values of μ_{bc}, F_{bc} or C_{bc} are most important for short conveyors as they can be a significant percentage of the total ΔT. Chapter 11 provides alternate values of μ_{bc} for specific cleaner types. The value F_{bc} varies considerably based on cleaner design. The historical CEMA value of C_{bc} = 5.0 lbf/in (0.09 kgf/mm) of belt width may be considered as a nominal value for calculating ΔT_{bcn} per belt cleaner but may not be sufficient. Consult your CEMA belt cleaner manufacturer for specific values of C_{bc}.

Rotary brushes and similar rotating cleaning devices do not impose appreciable belt pull if independently driven and properly adjusted. If such devices are driven from the conveyor drive shaft, suitable additional power should be incorporated in the appropriate pulley to operate them.

www.CEMANET.ORG Downloaded on 24/2/2017 to Patrapon Chitrakol, Siamluang, , Thailand. This document (14604) is subject to its

Since belt cleaners are often not serviced, wear out or are disabled, their possible low level resistance could be considered zero, $R_{rbc} = 0.0$. However, due to their significant effect use $R_{rbc} = 2.0$ when applied on short conveyors.

Reference Equation 6.106 Belt cleaners are part of flight 9 in the example

$$\Delta T_{bc9} = BW \times \sum_{m} C_{bc9} \times R_{rbc}$$

$C_{bc} = 5.0 \frac{lbf}{in}$ (CEMA default value for belt cleaners) $R_{rbc} = 1.0$ m = 2 cleaners

$$\Delta T_{bc9} = 48 \text{ in} \times \sum_{2} 5.0 \frac{lbf}{in} \times 1.0 = 48 \text{ in} \times 2.0 \times 5.0 \frac{lbf}{in} \times 1.0 = 480.0 \text{ lbf (218 kgf)}$$

Figure 6.107
Example ΔT_{bc9} tension added from belt cleaners

V-Plows

Return belt plows, also called V-Plows, are commonly used to protect the belt from fugitive material being forced under a pulley on the return belt strand and are cleaning devices and act similar to those described above. They are typically located where spillage from the carrying run can be anticipated or keeping pulleys clean is critical. The most common location for a return belt plow is near the tail pulley but they are often located prior to takeups and near the discharge. For return belt plows a value of $C_{bc} = 2.0$ lbf/in (0.04 kgf/mm) is recommended as a default value.

If large lumps or heavy impact is anticipated consideration should also be given to a tail protection plow. The purpose of a tail protection plow is to prevent belt damage from large lumps, broken idler rollers and other foreign objects. Tail protection plows are often mounted rigidly just above the belt surface and must be built to handle large forces impact forces while return belt plows often float on the belt and act as a belt cleaner. In either case the plow must be mounted so it can eject material safely from the conveyor.

Reference Equation 6.106 One return belt plow is added to flight 17 in this example

$$\Delta T_{bc17} = BW \times \sum_{1}^{m} C_{bc17} \times R_{rbc}$$

$C_{bc} = 2.0 \frac{lbf}{in}$ (CEMA default value for return plows) $R_{rbc} = 1.0$ m = 1 plow

$$\Delta T_{bc17} = 48 \text{ in} \times \sum_{1}^{1} 2.0 \frac{lbf}{in} \times 1.0 = 48 \text{ in} \times 1.0 \times 2.0 \frac{lbf}{in} \times 1.0 = 96.0 \text{ lbf (43.6 kgf)}$$

Figure 6.108
Example ΔT_{bc17} tension added from return belt plow

WWW.CEMANET.ORG has issued this document (4/2017) to Paterapom Sritrakool, Suduang, , , Thailand

Belt Discharge Plows

The use of a plow to discharge material off the side of the belt will require additional belt tension to overcome both the change in Kinetic Energy of the discharged material and frictional resistances in the plowed material and to the belt. Though the result of this calculation varies widely with material and plow design, $C_{dp} = 8.0$ lbf/in (0.14 kgf/mm) of belt width can be used as a rule of thumb for belts up to 36-inches (1000 mm) to approximate the amount of additional belt pull that normally will be required by well-adjusted, rubber-shod plows for applications suited to this discharge method.

$$\Delta T_{dpn} = C_{dp} \times BW \times R_{rdp}$$

Equation 6.109
ΔT_{dpn}, Estimated discharge plow tension effect

Where:

ΔT_{dpn} = Tension due to discharge plow in flight "n"
C_{dp} = $\mu_{dp} \times F_{dp}$ Frictional resistance of discharge plow
BW = Belt width
R_{rdp} = Modifying Factor

While a flat belt conveyor may be fitted with a number of plows to discharge material at desired locations, seldom is more than one plow in use at one time on one run of the belt conveyor. However, when proportioning plows are used, with each plow taking a fraction of the load from the belt, two or even three separate plows may be simultaneously in contact with the carrying run of the belt. In this case each plow may be considered to require their portion of 120% of the results of Equation 6.109.

Active Tension Contributions

Conventional belt conveyors must have tension added and/or removed to cause and control belt motion. This is accomplished by a frictional coupling between a pulley and the belt wrapped around it. In turn, the pulley shaft is coupled to a source of torque proportional to the tension change caused in the belt and the pulley radius.

$$\Delta T_{en} = \frac{T_{qn}}{\frac{D_n}{2}}$$

Equation 6.110
ΔT_{en}, Active pulley torque conversion to belt tension

Where:

T_{qn} = Active torque applied to pulley shaft
D_n = Pulley diameter in flight "n"

ΔT_{en} will vary widely per the characteristics of the conveyor, drive and control especially during changes of conveyor load and speed during operation. Therefore, T_{qn} should not be confused with the maximum capacity of these devices.

The frictional coupling between the active pulley and belt provides an upper possible limit for T_e based on the magnitude of T_2. This is discussed later in this chapter with the other influences on the maximum

WWW.CEMANET.ORG has issued this document (3604) on NOV 21, 2017 to Patcharaporn Smitkool, Samitivej, Thailand

tension change transmittable by a pulley. The sign of tension change is also directly indicated by the torque direction. If power is transmitted from the pulley to the belt, the approaching portion of the belt will have the larger tension, ($T_1 > T_2$). If power is transmitted from the belt to the pulley, requiring a regenerative drive motor or brake, the reverse is true ($T_1 < T_2$). The calculation of ΔT_{en} is not inherent to the conveyor as are the other elements of ΔT but, as part of the drive design, depends on the particular components selected and the desired motion.

Note about terminology:

- T_1, T_2 and T_e tensions which are adapted from previous editions and, with subscripts, relate to particular drive or brake pulleys. For downhill or regenerative conveyors T_{min} and T_{max} may be used instead of T_1 and T_2.
- For drive pulleys T_e is used interchangeably with ΔT described below (Subscripts of n = 1, 2.. separated by commas for multiple drives i.e. $T_{1,2}$ etc)

Driving the Belt

A drive is defined here as a device that removes or is capable of removing tension ($-\Delta T_{en}$) from the belt. Several key concepts that are involved with the execution of the mathematical concept of active or intentional tension management by the conveyor designer are introduced here. Though tension is higher where a drive is operating, this change occurs in the direction opposite to movement. The convention used here and discussed under 'Tension Management,' accumulates tension changes in the direction of belt movement so the effect of the drive is opposite to intuition. Negative (-) tension change from a drive is necessary to propel an empty belt, but it should be recognized, in a general sense, that a drive may act differently when loaded under the wide range of applications for which conveyors are used in and for the particular conditions a particular conveyor may see.

A complete drive system is defined as all of the components which cause and control steady operation as well as startup and stopping (normal and emergency) of a conveyor. A drive system, therefore, may both add and remove energy, with negative (-) and positive (+) tension changes respectively, depending on the operating circumstances. Tension is transferred to all of the components of the conveyor system through the belt to overcome friction and energy losses.

When decline portions exist on a conveyor, energy absorption may have to be done on continuous or steady state conditions. This will often require the use of a regenerative motor and control for the drive. Brakes are components which can only retard movement in the direction of belt movement. These same components and a wide range of other devices and practices are available for use by the designer to maintain control of the belt and its load under transient conditions involving speed and load changes. Proper control, as used here, is the portion of the conveyor design that assures safe tensions for all components and desirable movement of the bulk solid being carried. Active tension and control imply that tensions are added as needed to develop the desired movement.

Braking the Belt

Though braking, or energy removal, is often an integral part of the drive, this function is also often accomplished through a separate brake, often on its own pulley. For the purposes of the tension mathematics of the conveyor design, the brake will be treated similar to a drive except that it can only have a positive (+) value. Various conditions dictate the decision to use a brake or to integrate this function into the drive but these will be discussed later in this chapter. Likewise, a backstop can be used to remove tension from a stopped belt and thereby prevent rollback.

www.EBooksWorld.ir - Property of Sirjan University of Technology

TENSION MANAGEMENT

The following generalized approach uses the findings of iterative tension change calculations to develop an overall conveyor design. For the simplest conveyors the design decisions are fewer and straightforward so that the tensions at specific locations are intuitive enough that the steps described in the "Analysis Process" may not be necessary. Indeed, experience makes many of the design decisions second nature so that a rigorous stepwise procedure may seem redundant. None the less, the "Minimum Design Tensions" section must be followed for safe and proper operation.

Analysis Process

Belt conveyor analysis involves predicting tensions around the belt circuit by summing the tension contributions. The inputs to a particular conveyor design are the conveyance path, material loading, key components and idler sizes from speed and capacity considerations discussed in Chapter 5.

The conveyance path is broken into a series of flights,"n", for which the ΔT_n components of tension are calculated. The number and length of flights should be identified based on the variations in the conveyor slope, and the existence of curves, loading and discharge points and any accessory equipment as well as the need for accuracy of the analysis. Each pulley is considered a separate flight so that its individual contribution and loading can be incorporated.

Initially, it will be necessary to assume or estimate the approximate size of various components and the tension at an arbitrary point on the conveyor. The tensions are then accumulated from this point progressing in the direction of belt movement adding or subtracting the various friction and gravity effects until back to the starting point. Several iterations cycles are needed from this point to develop an acceptable design.

Steady State Running Analysis

The basic design process is usually oriented to the steady state operating condition as the base case of normal operation. However, it is not the only condition that can be critical to successful operation. Varying conditions at constant belt speed as well as the tension effects when the belt speed is varying should also be considered for thorough and dependable design.

In many cases the design process has historically been considered satisfactory by focusing only on the fully loaded and full speed steady state condition. This high tension condition is useful for evaluation and comparison of major decisions of the design. Designs with simple and predictable layouts based on steady state conditions are often successful due to thermal forgiveness in drives and the infrequency of high transient forces on the various components so that some of the steps or criterion described below are often eliminated for the sake of simplicity or time saving if experience or history so indicates. The intuition and experience of a knowledgeable conveyor engineer is essential for good conveyor design but thorough design requires analyzing all the transient running conditions. Automated computerized design tools allow evaluation of design iterations over the widest range of operating conditions and transient conditions with minor additional effort compared to the additional assurance of a sound design.

Transient Running Analysis

The life of many components, the behavior of the bulk material, and the operator safety can be adversely affected with poor startup and stopping dynamic conditions. The evaluation of a wide range of those possibilities should be considered as a normal part of the conveyor design. The basic friction calculations and especially their range as influenced by the various R_{rxx} Modifying Factors described in this chapter are typically suitable for these analyses though they can be different due to acceleration and transient thermal conditions (warm up).

www.CEMA.org : CEMA Technical Publication (6404) on Apr 2, 2017 to Shanghai Shibang Suanluan Co., Ltd.

Maximum Belt Tension as a Primary Design Result

A key design parameter indicating the total cost of the conveyor is the maximum tension seen in the belt. Therefore minimizing it is a major focus of the design process. A distinction needs to be made between the frequency and the magnitude effects of the tensions predicted under various operating conditions. The importance of the number of load occurrences on fatigue limitations often dictate sizing but design rules vary by component based on the component's load cycles and relative importance so that a single cycle of highest load may control. This distinction is an area of continuing development.

Operating Maximum Belt Tension

The operating maximum belt tension is defined as the maximum belt tension occurring when the belt is conveying the design load from the loading point continuously to the point of discharge. This is the steady state condition and defines the most common tension cycle. Operating maximum tension often occurs at the discharge point on horizontal or inclined conveyors and at the loading point on regenerative declined conveyors. On compound conveyors with flights of varying slope, the operating maximum belt tension frequently occurs elsewhere.

Because the operating maximum belt tension must be known to select a belt, its location and magnitude must be determined. The sizing of structure and other components can vary by location so the maximum tension occurring at each location needs to be understood as well.

Temporary Operating Maximum Belt Tension

A temporary operating maximum belt tension is that maximum tension which occurs only for short periods. For example, a conveyor with a profile that contains an incline, a decline, and then another incline, may generate a higher operating tension when only the inclines are loaded and the decline is empty. The possibility of these temporary operating maximum belt tensions should be considered in the selection of the belt and the conveyor machinery however infrequent.

Economy of design dictates the selection of a belt having a carcass strength at or near the normal operating tensions. Consequently, the additional forces resulting from acceleration or deceleration may overstress the belt or its splices. While this problem is most likely to exist with respect to the belt, there also is the possibility of overstressing the mechanical components such as pulleys, shafts, bearings, and takeups.

Starting and Stopping Maximum Tension

The starting torque of a drive must be more than the normal operating torque to cause speed increase or acceleration. For instance, an electric motor may be capable of more than 2.5 times the motor full-load rating. Such a torque transmitted to a conveyor belt could result in starting tensions many times more than the chosen operating tension. To prevent over sizing of the belt or progressive weakening of splices and subsequent failure, starting maximum tensions should be avoided or anticipated in the component selection. Likewise, if the belt is brought to rest very rapidly, especially on decline conveyors, the inertia of the loaded belt may produce high tensions.

www.CEMAnet.org has issued this digital product on [illegible], 2020 to Interapro Stirling Ltd, Suanlee, Thailand

Curves

Belt conveyor layouts frequently require curves to meet site conditions, avoid obstructions or adapt to loading and unloading elevations. Conveyors can be made to follow curves in just about any direction but are limited by belt tension considerations in order to stay in contact with the rolling components and limit belt edge stresses. Curves are divided into vertical and horizontal classifications to aid in analysis.

Vertical Curves

Vertical curves are defined as those where the center of curvature, is on the vertical or XZ plane, as depicted in Figures 9.2 and 9.12. In the case of concave vertical curves (where the center of curvature lies above the belt), if belt tensions are too high, especially during starting, the idler load decreases and belt instability occurs if the belt lifts off the troughing idlers. First, tension acting along the curve affects the idler load. Two different problems may be encountered with vertical curves. If the center of curvature is below the belt line the loads on the idlers in this convex curve increase. It is necessary to analyze this problem in regard to full, partial, and no loads. Second, bending through the cross section of the troughed belt causes redistribution of tension across the width. These must be superimposed on the average stresses without over or under tensioning the belt or splice. These stresses are discussed in Chapter 9.

Horizontal Curves

Horizontal curves are defined as those where the center of curvature is on the horizontal or XY plane, as depicted in Figure 9.25. Horizontal curves are developed to run within a narrow path under a range of operating conditions. The tendency of belt tension to pull the belt toward the center of the radius must be protected against by idler tilt and stable belt tension. In addition, belt tensions are redistributed across the belt comparable to that in vertical curves. Chapter 9 discusses these maximum and minimum limits.

Compound Curves

Overland conveyors often follow terrain where it is necessary to use both horizontal and vertical curves. These curves are designed by a combination of the effects and methods referred to under Vertical and Horizontal Curves. Pipe conveyors are another example of the use of compound curves to follow a three dimensional path.

Minimum Design Tensions

An initial pre-tension must be put into the belt to provide for proper operation. This is done by belt takeup devices that apply a tension or a stretch in the belt. These two approaches have the same general effect but operate differently under changing conditions. Takeups serve to affect the tension uniformly throughout the belt circuit but do not affect the local changes in tension, except via sag affects. They are used to maintain minimum tensions needed for acceptable operation.

Although takeups can have active control affecting the tension differently for different operating requirements, they are considered as passive devices since they add equal tension to both the approaching and retreating belt and do no work on the system.

Developing the lowest practical minimum tension through takeup optimization is a major design goal since it defines a base tension that adds to the maximum tension in the system and therefore impacts the cost even though it does not contribute work to the conveying function.

www.CEMATOG.com Licensed to this document (4200) on Apr 4, 2017 Password emailed to Shuang Liu

Minimum T_2 for Active Pulleys

The ΔT_e that can be developed or transferred from an active pulley to the belt is governed by the coefficient of friction existing between the pulley and the belt, the wrap, and the value of T_{min} which establishes the minimum normal pressure which exists between the belt and the pulley. The following equation establishes the limit condition or the allowable circumferential traction for a single pulley:

$$\Delta T_{emn} = T_{minn} \times (e^{f\theta_n} - 1.0) \times R_{rpf}$$

Equation 6.111
ΔT_{emn}, Allowable tension change for active pulleys

Where:

ΔT_{emn}	= Maximum belt tension change possible at pulley "n"
T_{minn}	= Minimum tension at pulley "n"
e	= 2.718 natural logarithm base
θ_n	= Belt wrap on active pulley "n" per Figure 6.113 (radians)
f	= Coefficient of friction between pulley surface or lagging and belt surface (dimensionless)
	0.25 for rubber surfaced belt on bare steel pulley
	0.35 for rubber surfaced belt on rubber lagged pulley
	0.50 for rubber surfaced belt on patterned hard surfaces such as ceramic lagging

Values of f are for design use under normal startup and running. This includes an allowable transient T_e up to 150% of steady state operation. Though full pulley slip is not considered an acceptable design, occasional local slip between the belt and pulley is not uncommon and inevitable in worse case environmental conditions. In the case of muddy or with thick material films, f should be decreased by 20% with by $R_{rpf} = 0.8$.

Figure 6.112 shows general concepts of ΔT for single drive pulleys. Multiple drive pulleys are discussed under Belt Stretch Interactions. T_1 or T_2 terminology are preferred by many instead of T_{max} and T_{min}. The latter are more universally applicable since the pulley torque, opposite the direction of increasing T, can be with or against the direction of belt movement. At the same time, with drive pulleys tension consistently changes from T_1 to T_2 in the direction of belt travel, independent of which is larger.

WWW.CEMANET.ORG has issued this document (1.0) on Apr 24 2017 to Pattarapom Phirakool, Suanlang, , Thailand

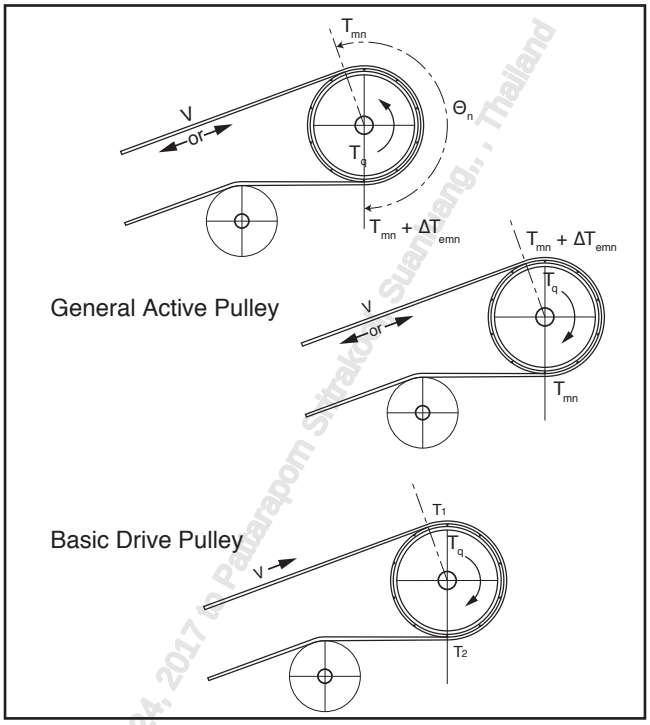

Figure 6.112
Basic and active general pulley convention and terminology

It should be noted that ΔT_{en} is that needed for belt movement or provided by the drive/brake The absolute value must be less than ΔT_{emn} to prevent the probability of slip.

For many cases, the belt will have an angle of wrap, θ_n, around the active pulley of about 180 degrees or that needed to return the belt conveniently. Often, it will be necessary to arrange a drive that uses an angle of wrap greater than 180 degrees. This is accomplished by the appropriate positioning of a snub pulley, which can extend the angle of wrap to approximately 240 degrees although 210 degrees is often more practical. If a greater angle of wrap is necessary, it may be necessary to use a multiple-pulley drive.

With basic head driven, inclined or level conveyors as shown in Figure 6.145, T_1 consistently drops to T_2 in the direction of rotation and braking torque is less than driving torque. In this case, tabulated wrap factors, C_w, are convenient for manual design purposes. C_w is the effective ratio $T_2/\Delta T_e$ derived for use with common combinations of f and θ.

$$C_{wn} = \frac{1}{(e^{f\theta n} - 1.0)} = \frac{T_2}{\Delta T_e} \quad \text{(dimensionless)}$$

Equation 6.113
C_{wn}, Pulley wrap factor

WWW.CEMANET.ORG has a site license (CEMANET1400) on Apr 24, 2017 © Paparapom Sirirak, Suandang, , Thailand

Common Pulley Wrap Factors, C_w for Rubber Belt Covers					
Type of Drive Pulley	Wrap Angle Θ_n (deg)(3)	Automatic Takeup		Manual Takeup	
		Bare Pulley	Lagged Pulley(1,2)	Bare Pulley	Lagged Pulley(1,2)
Single, no Snub	180	0.84	0.50	1.20	0.80
Single with Snub	200	0.72	0.42	1.00	0.70
	210	0.66	0.38	1.00	0.70
	220	0.62	0.35	0.90	0.60
(1) For wet belts and smooth rubber lagging use bare pulley factors (2) For wet belts and grooved rubber lagging use lagged pulley factors (3) If wrap is unknown assume: Single with no Snub Θ =180 degrees, Single with Snub Θ = 210 degrees					

Table 6.114
Table of common pulley wrap factors

WWW.CEMANET.ORG has issued this document (1460) to Ari Ari (Ari.Ari@gmail.com) Pattarapom Sirakool, Siam Quarry Co., Ltd.

Belt Sag Between Idlers

Chapter 5, "Belt Conveyor Idlers," presents basic criteria on the subject of idler spacing. A major requirement, noted in Chapter 5, is that the sag of the belt between idlers must be limited to avoid spillage of conveyed material over the edges of the belt. The sag between idlers is closely related to the weight of the belt and material, the idler spacing, and the tension in the belt and the latter two must be balanced to the following limits to provide reliable conveyance.

The basic sag formula for a pure catenary can be expressed as a relation of belt tension, T_n, idler spacing, Sin, and the unit weight of the belt and load, $(W_b + W_m)$, in the form:

$$\Delta Y_s = \frac{(W_m + W_b) \times S_i^2}{8.0 \times T}$$

Equation 6.115
ΔY_s, Catenary sag equation in belt conveyor terms

$$\Delta y_{sn} = \frac{(W_b + W_m) \times S_{in}}{8.0 \times T_n} \times 100\ (\%)$$

Equation 6.116
Δy_s, Catenary belt sag as a percent of idler spacing in flight "n"

Where:

ΔY_{sn} = Vertical belt sag between idlers for flight "n" as a distance [ft (m)]
Δy_{sn} = Vertical belt sag between idlers for flight "n" as a percent of idler spacing S_i
W_b = Weight of the belt per unit length [lbf/ft (kgf/m)]
W_m = Weight of the bulk material on the belt per unit length [lbf/ft (kgf/m)]
T_n = Average belt tension in flight "n" [lbf (kgf)]
T = Tension [lbf (kgf)]
S_{in} = Idler spacing in flight "n" [ft (m)]

Experience has shown that when a conveyor belt sags more than 3 percent of the span, between carrying idlers, load spillage likely results during operation. Lower sags are needed with faster belts as discussed in the Liftoff section on Main Resistances. The pure catenary equations are used though the actual sag deviates from this calculation as used in the ΔT_{mz} calculation because the accuracy of this rule of thumb does not justify the added precision. The allowable percent sag has evolved from experience and has proven to prevent spillage and material departing the conveying trough for most operating conditions. Reformatting the catenary equation for the minimum allowable tension at various percentages of belt sag yields a convenient design formula:

$$T_{minn} = 12.5 \times S_{in} \times \frac{(W_b + W_m)}{\Delta y_s}$$

Equation 6.117

T_{minn}, Minimum tension required to meet specific sag percentage in flight "n"

See Table 6.119 for recommended belt sag percentages for various full load conditions. Graduated spacing, or varying idler spacing at different points in the conveyor, can be used but should be calculated to observe the following limitations:

- The sag limits of Table 6.119 should be maintained when belt is operating with a normal load.
- The sag in the loading flight should not exceed 1% with less sag preferred for effective skirtboard sealing. See Chapters 11 and 12 for more information on skirtboard seals.
- A maximum of 4.5 percent sag should be maintained when the loaded belt is standing still but the idler spacing should not exceed twice the suggested normal spacing of the troughing idlers listed in Table 6.119.
- A maximum of 1.5 × the normal running sag limits should be used for startup and shutdown
- The load on any idler should never exceed the idler load ratings given in Chapter 5.
- Liftoff as described under the discussion of Main Resistances should be prevented during steady state operation.

www.CEMANET.IR Free sample document (14604) on Apr 24, 2017 10:08:29 PM Shirazkool, Sudhudeo, Harold

Material Lump Size	Idler Trough Angle (deg)		
	20	35	45
All Fines	3.0%	3.0%	3.0%
50% of Maximum (1)	3.0%	3.0%	2.0%
100% of Maximum (1)	3.0%	3.0%	1.5%
(1) Figure 4.2 Recommended belt width for % of lumps			

Table 6.118
Recommended carrying flight belt sag for various full load conditions

When handling lumpy material on belts operating on a 35 degree (or deeper) troughing idlers, belt tension should be increased to reduce the percent of sag indicated in Table 6.104, especially with fabric belts. Deeply troughed conveyor belts normally carry a relatively large cross-sectional loading and corresponding heavy weight of material per unit length of conveyor. Therefore, the material exerts a greater pressure against the side of the trough, tending to cause greater transverse belt flexure. The purpose of increasing the minimum belt tension in belts operating on idlers of greater than 20 degrees troughing angle is to keep this transverse belt flexure to an acceptable minimum and thus prevent spillage. Similarly, when frequent surge loads are encountered or a substantial percentage of large lumps are expected, the material weight per unit length of conveyor will be increased. Consideration of increased minimum belt tension or idler spacing at, or closely adjacent to, the loading points is recommended.

The equations for critical belt speed preventing liftoff loss can also be used to develop a minimum belt tension within the context of this chapter, if preferred. Sag also contributes to the interaction of belt and idlers regarding belt bending along the idler junction and the tendency for the belt to flap between idlers.

TRANSIENT TENSION - SIMPLIFIED APPROACH

Based on the physical principle of Conservation of Energy, changing the tension balance will cause speed changes in the moving parts of a conveyor. A new speed or Kinetic Energy level of the moving conveyor is created when the force balance changes. In practice, the prime mover is designed to maintain a relatively constant speed by automatically increasing its torque or the tension added to the system as needed. Speed change is caused or allowed through tension changes in the belt initiated by changes in the active pulleys and approximately proportional to the mass of the system. Since the belt stretches or shrinks with changes in tension, the Potential Energy state of the system also changes as the tension distribution changes with load, other belt tension influences and active pulley contributions. Likewise, changes in the loading and tension cause changes in the friction and therefore work of the system as well as the work involved with the Potential Energy rate due to gravity.

As energy is constantly exchanged from the active pulleys to the conveyor system, tension changes throughout the system. These tensions are not instantaneous throughout the belt length but propagate along the belt substantially at the speed of sound in the belt. Since the belt stretches like a long continuous spring, the local tension along the belt is associated with its local elongation. Slow changes from load are imposed at the speed of the belt and can be absorbed or redistributed without problem by the belt. Changes in the tension contribution from active components, especially if they are sudden, can cause much higher tensions to be imposed from the release in the belt Potential Energy stored as belt stretch.

The accelerating and decelerating forces that act on a belt conveyor during the starting and stopping intervals are mathematically similar. However, their magnitude and the algebraic signs governing them change, as do the means for dealing with them.

CEMA Publication 60-3-2017 (Chinese Translation), Shanghai, China

Prediction of transient local tensions throughout the belt circuit is important and the results are sensitive to a thorough understanding and detailed prediction of the Kinetic Energy and Potential Energy along the belt as it stretches and in each of the components of the conveyor, especially the active components. Computerized numerical methods, commonly called Dynamic Analysis, are capable of this type of analysis and are commonly justified for a full understanding of possible conveyor behaviors.

For initial design a quasi-Static or rigid body dynamic analysis is performed to provide first level impact of the various design decisions. For very simple conveyors the Static approach provides suitable insight if previous design and operation problems are addressed. In this approach the speed changes in the belt are treated as constant around the belt circuit. Rigid body or linear averaging assumptions to the acceleration/deceleration forces and times are sufficiently accurate for these applications.

New applications requiring dynamic analysis to insure reliable operation:

- Long flight lengths greater than 1 mile (1.6 km)
- Multiple drive or brake locations, head-tail or intermediate
- High lift conveyors with takeup near the elevated discharge end
- Highly regenerative conveyors with large brakes
- Complicated conveyors with multiple vertical curves
- Conveyors with horizontal curves
- High capacity conveyors, greater than 8,000 tph (7,300 mtph)
- High speed conveyors, greater than 1,000 fpm (5 m/s)

Calculation of Average Acceleration and Deceleration Forces

Acceleration is defined as the second derivative of displacement with respect to time, so time is the basic variable in computing the force or belt tension. With Newton's second law, $F = M \times a$, the belt velocity change versus time for a belt tension change can be computed. The force necessary or available to accelerate or decelerate (negative acceleration) a conveyor is directly proportional to the mass of the parts and material in motion. To predict the interaction of speed and tension with time, the belt conveyor designer is confronted with the necessity to compute the inertia of all its moving parts, including the inertia of the load on the belt and the various elements contributing to belt tension. Average change in velocity due to changes in the frictional forces, the forces caused by elevating or lowering the load and belt, or changes at the active drive system components can be estimated with the rigid belt assumption.

Moving Mass

For purposes of calculation, assume that the belt and the load on it move uniformly in a straight line. Use the equation for this linear motion as the basis for calculating the acceleration and deceleration forces. A convenient convention using weight units for mass is described here though the same concept applies with mass units. The total mass effect of the belt and load is calculated from their weight per unit length times the length. Other important parts of the system, however, rotate. This is true for all pulleys, idlers, and all the rotating parts of the drive. To incorporate rotating components, one must find their equivalent mass as if they were in linear motion (just as drive torque is converted to drive tension). For rotating bodies, the mass distributed around the center of rotation is equivalent to the same mass concentrated at a distance, K, (the polar radius of gyration) from that center. The Equivalent Weight, WK^2, is the weight of the body multiplied by the square of the radius of gyration. In this format weight is used to quantify the mass. This must be reconciled in the calculation for dimensional integrity. The speed at the effective radius K versus the speed of the belt is then used to adjust the Equivalent Weight of the component to that of the belt so that they can be summed to arrive at an effective contribution to the total weight or effective mass of the conveyor acting as a rigid body at the belt speed. If WK^2 is known for the rotating

www.CEMA.org Issued: 04/01/2014 Copyright © 2017 to Participating Standards Bodies, All Rights Reserved

conveyor components, the effective equivalent weight, W_{et}, of the moving masses at the belt line can be found. Values of WK^2 [lbf-ft^2 (kgf-m^2)], which require design details to compute, except for very simple shapes, must be estimated from the summation of simple shapes or obtained for each component from the manufacturers of the conveyor components.

$$W_{et} = W_{bt} + W_{mt} + \sum_i \left(W_r \times K_i^2 \times \left(\frac{2 \times \pi \times N_i}{V} \right)^2 \right)$$

Equation 6.119

W_{et}, Equivalent weight of all moving conveyor components and load

Where:

i = Subscript for each individual rotating component including drive components
subscript "n" is used for pulleys
K_i = Polar moment of inertia or effective radius of rotating component "i"
L_b = 2 × L Total length of belting on conveyor [ft (m)]
L_m = Loaded portion of belt, varies between 0.0 and belt length, L
N_i = Rotational speed of component "i" (rpm)
V = Nominal design belt speed or belt speed before time t when acceleration starts
W_{bt} = W_b × L_b Total weight of the belt [lbf (kgf)]
W_{et} = Total equivalent weight of all moving components and the load [lbf (kgf)]
W_{mt} = W_m × L_m Total equivalent weight of the bulk material on the belt [lbf (kgf)]
W_r = Weight of rotating component "i" [lbf (kgf)]

$$M_{et} = \frac{W_{et}}{g}$$

Equation 6.120

M_{et}, Total equivalent mass of moving components and load

$$\Delta T_a = M_{et} \times a$$

Equation 6.121

ΔT_a, Accelerating (+) or decelerating (-) force provided to the moving conveyor

$$\Delta V = a \times t$$

Equation 6.122

ΔV, Change in belt velocity in time interval, t

$$V_t = V - \Delta V$$

Equation 6.123

V_t, Transient Belt velocity at time t

WWW.CEMANET.ORG has issued this document (1A-0A)/2017 to Pattapom Intrakot, Suanluang, Thailand

Where:

a	= Theoretical uniform belt acceleration
g	= Acceleration due to gravity
M_{et}	= Total equivalent moving mass of components and load [slugs (kgm)]
t	= Time interval being analyzed
V	= Design belt velocity or velocity just before time "t"
ΔV	= Change in belt velocity during time interval "t"

WWW.CEMANET.ORG (assigned to Siriwat Kaewsuwan (5804) on Aug 31, 2017 (Kasetsart University, Sukhumvit, , Thailand)

The above provides a total effective ΔT_a that is provided by or to the moving mass of the conveyor while the belt speed changes at the rate of a. This force is a total, for the global acceleration, a, and time, t, due to the contributions of the various masses. The local tension contributions T_{am}, T_{ab} and T_{ai} are seen around the conveyor corresponding to the local acceleration at the belt line but the rigid body analysis does not break them out. In this simplified calculation, a uniform acceleration, a, is assumed so that T_a contributes to a tension imbalance only without explanation of local effects except those involved with rebalancing the zero tension summation at steady state movement. The value of the calculation is in the estimate of the time and/or force needed for belt speed changes. A full Dynamic Analysis is necessary for these detailed and transitory effects.

In some cases, it is desirable to manage the dynamic behavior of a conveyor by increasing the effective mass. This can be done by adding a flywheel. A flywheel's WK^2 can be added to the drive, thus increasing the starting time and limiting the torque input to the belt conveyor system, as well as increasing stopping time and distance. Additional information on these calculations is provided as their component contribution

Passive Speed Change

When the ΔT_e for the active components applied by an active drive is removed, the conveyor speed drops due to the new unbalance in tension. In cases where large amounts of energy are stored as kinetic or potential energy and the speed abruptly changes as during an emergency shutdown or with power failures, the result can be a dangerous condition and detailed Dynamic Analysis is strongly recommended. An estimate of the drift time with a simplified analysis can predict the time the conveyor will continue to run or drift and indicate whether a dynamic analysis is needed. Clearly, declined conveyors resulting in regenerative designs will not provide passive stopping under loaded conditions

To make this calculation, constant acceleration, a, either (+) or (-) as appropriate, is assumed to act over a period of time t to cause a particular change in belt velocity, ΔV. With the approximation of uniform deceleration, the calculations for a, drift time, t_d, and drift distance, L_d, proceed as follows:

$$a = \frac{\sum \Delta T_{en}}{M_{et}}$$

$$t_d = \frac{\Delta V}{a} \quad (s)$$

Equation 6.124
t, conveyor stopping time

Where:

$\sum \Delta T_{en}$ = Total tension added at t = 0 before stopping started

$$a = \frac{\sum \Delta T_{en}}{M_{et}}$$

$$L_d = \frac{\Delta V}{2} \times t$$

Equation 6.125
L_d, Drift distance conveyor travels before stopping

Implications of passive stopping or drift include;

- Emergency stopping time should be considered for its safety implications.
- Short drift time can be an indicator of the potential for high dynamic tensions to develop. This is discussed as a Transient Tension effect.
- The amount of material discharged may flood a more quickly decelerating or stopped receiving conveyor.

The sequential conveyor stopping and starting is almost always a prerequisite of conveyor design as part of a bulk material handling system. Coordinating the coasting time or drift distance is important where a system of belt conveyors transferring from one to another, into storage or into process equipment. As an example, a belt with very long centers may transfer to a belt of short centers, in which case the time required to decelerate the two belts must be synchronized, despite the differences in the braking forces required. During the acceleration period, the same synchronization is necessary. In either case, the consequences of not making proper analysis and providing the necessary controls may result in a pile-up at the transfer point and possible destruction of the machinery and belt, and an inoperative system. The amount of material discharged during the stopping interval is based on the belt travel during shutdown.

$$M_d = W_m \times L_d$$

Equation 6.126
M_d, Material discharged during stopping

Active braking, as described in the following should be considered if necessary due to sequential stopping concerns. When a sufficiently declined belt starts loaded by releasing a brake, the startup can be passive and accelerate per the same tension balance method.

Active Speed Change - Acceleration/Deceleration

For inclined or horizontal conveyors, the acceleration of a belt conveyor is accomplished by some form of prime mover, usually an electric motor. The torque applied by the motor is excess of that necessary to overcome friction and to elevate the load enables a rate of change of inertia or belt acceleration. Passive deceleration of these conveyors will occur when the motor torque is less than that needed for friction and lift and may be additionally controlled by an active braking action adding to the friction and gravity to resist inertia and decelerate the belt. Deceleration is treated as negative acceleration. Declined conveyors respond similarly when considering the tension offset provided by gravity. Torque applied by regenerative drives will likewise control acceleration, positive or negative.

www.BELTSCAD.com has licensed this document to [illegible] on 04/24/2017 to Pattaraporn Smitkool, Suanluang, , Thailand

In a more general sense, when the active ΔT_e is changed, the speed changes. The Kinetic Energy change of the system is provided through an active pulley and/or converted from the potential energy of the material to create a new energy balance. The rate that work is added or removed is power and the power available establishes the rate of speed change of the moving mass. In reality, since the friction has relatively low dependence on speed and the gravity force of the material is independent of speed, ΔT_e at the end of an intentional change in speed is close to that before the speed change and to the breakaway tensions just after movement is initiated. Nonetheless, ΔT_e must change temporarily to provide for changes in the momentum or Kinetic Energy of the system. Power to maintain speed is somewhat proportional to increasing speed but steady state torque and tension are closer to being constant over a range of speeds.

In summary, the work and force balance of a steady state system must reestablish at a different speed when the power or 'rate of work' provided changes but that does not apply to tensions, except in a transient way. The rate at which the speed readjusts, 'a', is determined by the nature and magnitude of the power source or active tension provider, the rate of elevation change and the magnitude of the various passive resistances and masses. This acceleration is important since it establishes the time required for a speed change and the 'dynamic' belt forces that develop. The acceleration can be considered proportional to the excess torque available since the transient ΔT_e or ΔT_{et} resets itself near ΔT_e at the end of the speed change. For use in calculating with Equation 6.121:

$$\Delta T_a = \Delta T_{et} - \Delta T_{ef}$$

Equation 6.127
ΔT_a, Tension change available for speed changes

Where:

ΔT_a = Tension available to cause speed change
ΔT_{et} = Temporary or transient active tension provided by the drive
ΔT_{ef} = Tension required at new speed

Active speed change in the simplified calculation, the time period, t, and the change in belt speed, ΔV, are related to acceleration, a, which is in turn related to, ΔT_a, through the mass, ΣM_{et}.

Startup and Shutdown

Startup and shutdown are special cases of active speed change. The tension change for breakaway is significant as it includes most of the friction forces and the excess torque needed to accelerate the conveyor is provided from transient over torque available from the motor or other prime mover. Startup time has important operational implications. Times and tensions depend on the availability of this extra torque seen on speed torque curves for the motor individually or in combination with other drive components.

While accurate dynamic tension levels require dynamic analyses, conveying availability and sequencing issues can be analyzed and coordinated satisfactorily when torque availability in excess of steady state operation is known using the formula provided previously. The travel distance and material discharged during active stopping is calculated similar to passive stopping using the active deceleration, -"a", and "t" which still result from the net tension balance. Likewise, the use of active deceleration components for controlled or braked stops should be evaluated for safety and sequencing concerns. The stopping time, t, available from rigid body calculations, is also important to the brake selection as discussed later in

www.CEMAT.org has issued this document (4404) on Apr 24, 2017 to Ed Rogers (Rockwell, Stanwood). Unlicensed

this chapter. The $-\Delta T_e$ caused by these components and their effect when stopping the system should be considered since high decelerations can cause higher system forces than starting. Dynamic analyses are needed for accurate assessment of quick stopping.

The transient tension analysis described above is a simplification suitable for the initial design of most conveyors and for the final designs of short conveyors with slow reacting drives. The accuracy of the above method can be increased with more short flights and by breaking the drive characteristic into increments of varying ΔT_e better simulating the actual drive. This does not, however, address the tension or energy involved with transient belt stretch and cannot replace a full dynamic analysis.

When forward motion is stopped, a loaded belt conveyor inclined at sufficient slope tends to move backwards. Should the loaded belt move backward, the material would pile up at the tail end of the conveyor. This could seriously damage the belt, create a safety hazard, and result in the need to clean up and dispose of the spilled material. To prevent this reversal of motion, a backstop is often used. Inclined flights act as declined flights when analyzing for backstop capacity since the belt direction in question is reversed.

Loading

The possibility of various loading conditions while changing speed or changing load conditions during steady speed will affect belt tensions. Especially with complicated conveyor paths, a wide range of conditions are possible with significant implications to operation and component life. Proper design requires evaluation of many combinations of load and speed for its probability and consequences. The calculation should consider each when a safety risk, a shortened component life or an operating risk is perceived. Specifically this includes:

- The iteration process to arrive at the T_e for a particular load and speed to verify the component designs are appropriate.
- The inertial consequences of speed change, a, incorporating the drive characteristic.

Elaborating on this, the belt conveyor may operate satisfactorily during stopping or starting if completely loaded or if empty. This may not be so if only portions of the conveyor length are loaded. The conveyor, therefore, has to be analyzed under various conditions of loading. For example, when a belt conveyor contains a concave curve, a critical condition of starting may be the lifting of the belt at the curve during acceleration because the portion of the belt ahead of the concave vertical curve is loaded, while the remainder of the belt is not. Such conditions require deliberate consideration for their possibility and then careful analysis. The following should be considered a partial list or examples of possible load conditions that should be considered;

- Steady running at uniform loading from empty to full, including various percentages.
- Startup and shut down, passive and active, under various uniform loadings
- Steady and transient speed conditions with progressive loading and unloading of the belt (load on, load off).
- Steady and transient speed conditions with loading only on curves or only off of curves.
- Steady and transient speed with loading only on or off of all inclines or all declines.
- Failure or aborted operation of drive components under various loadings

Some of these conditions may be extremely unlikely or with low consequential damage. In other cases, it may be clear that one condition is worse than another. In those scenarios, the analysis may be limited to those that are considered controlling, especially in the preliminary or conceptual design phase. The final design would then involve additional checks to prove these guesses or judgments. Dynamic analysis may be needed for appropriate evaluation.

Downloaded from www.conveyorknowledge.com by Patcharaporn Chaiyapol (pchaiyapol@gmail.com) on Apr 25, 2011 in Pattaraporn Chaiyapol, Thailand

TRANSIENT TENSIONS - DYNAMIC ANALYSIS

Though the simplified approach to transient analysis can give good insight on possible problems and operating behavior, Dynamic Analysis provides a much more accurate picture of these behaviors. "Static" models are limited to simulating steady state or slowly changing movement for general behavior and component loading needed for safe conveyor design. There are times when the simplified transient with "static" rigid body assumptions analysis is unsafe if not just inaccurate. This applies to the entire system as well as specific components and locations as follows. In addition to understanding the inherent transient nature of the materials and components comprising conveyors, use of the following system analysis concepts has been invaluable for safe and efficient conveyor design.

Dynamic Modeling

In the 5th edition of Belt Conveyors for Bulk Materials a subheading in Chapter 6, Belt Tension, Power, and Drive Engineering, is labeled “Necessary Assumptions”. Since this was written many years ago, several important considerations have evolved in bulk material handling industries which dictate additional concern for belt elasticity issues.

As in all engineering investigations of this type, the first question is, “To what degree of accuracy will the computations have to be carried out?” The answer is not simple. Important factors are the overall size, the importance of the installation, and the type and sensitivity of the equipment adjacent to it. In any case, numerous simplifying assumptions will have to be made to keep the engineering work within reasonable limits. For examples of simplifying assumptions, refer to the problems connected with belt stretch (elastic elongation from accelerating or decelerating forces) and takeup reactions.

First, and most importantly, belt conveyance applications have gotten much bigger. When the 5th edition was written, a typical conveyor might be 36 to 42 inches (900 to 1066 mm) wide carrying 750 to 1,000 tph (680 to 900 mtph) at velocities of 400 to 600 fpm (2.0 to 3.0 m/s) over lengths of 500 to 1,500 ft (150 to 450 m). It is still true today that belt elasticity issues and conveyor dynamics “are not a major issue” on conveyors of this range. And although these conveyors still exist in all industries, many conveyors today are 72 inches (1800 mm) wide, carrying 5,000 to 10,000 tph (4,500 to 9,000 mtph) at velocities of 1,000 to 1,500 fpm (5.0 to 7.5 m/s) over lengths of 10,000 to 20,000 ft (3,000 to 6,100 m) and the largest belt conveyors today are up to 120 inches (3.0 m) wide, carrying 44,000 tph (40,000 mtph) at velocities up to 2,250 fpm (11.5 m/s) over lengths up to and beyond 50,000 ft (15,250 m). There is no doubt, on these largest applications, simplifying assumptions dealing with belt elasticity are no longer suitable. Ignoring belt elasticity during stopping and starting can have a major impact on the performance of the conveyor.

Secondly, when the 5th edition was written very few if any conveyor engineers had computers available to do their calculations. Since dynamic problems are computationally difficult, it was absolutely necessary to simplify the analytical process. At that time, it was “common practice in the solution of problems in dynamics” to treat the system as a rigid body. Today, as our computational hardware continues to develop at an extremely rapid pace, engineers are able to treat dynamic problems more accurately.

Third, with computer hardware comes the inevitable availability of engineering software. It is no longer necessary for a belt conveyor engineer to tediously learn and calculate each step in the analytical process as he can simply buy a computational tool and input data as requested. A 1970’s conveyor engineer might have spent weeks pouring over stacks of calculations in order to engineer a 10,000 ft (3,050 m) conveyor while a 21st century engineer might only spend minutes evaluating the viability of a 20,000 ft (6,100 m) conveyor with a commercially available static analysis software program. Although these programs might provide entirely reliable analysis of a running conveyor, they do little to guide a novice engineer in the proper method of starting and stopping this same machine reliably.

Initial simplified calculations for acceleration and deceleration treat the system as a rigid body. This is a common practice in the solution of problems in dynamics. While the results usually are quite satisfactory,

www.CEMAT.ORG.br | Rua Dr. Plínio Barreto, 285 - 4º andar - CEP 01313-020 - São Paulo - SP - Brasil - Tel. (11) 3145-0210 - Fax (11) 3141-1660

there is more cause for concern over the accuracy of results in the case of belt conveyors. During both the acceleration and deceleration cycles, the transient forces imposed result in extra stretch not encountered during steady state operation. This may result in early splice failure, excessive takeup travel, and other difficulties. The belt conveyor designer should be aware that, for conveyor systems with very long center belts, stretch considerations should not be overlooked.

Mathematical Modeling

When performing starting and stopping calculations using static analysis, it is assumed that all masses are accelerated at the same time, thus assuming the belt is a rigid body and the rotating masses and the belt are rigidly connected ($F = M \times a$). In reality, the torque produced in the motor and transmitted to the belt via the drive pulley creates a stress wave which starts the belt moving gradually as the wave propagates along the belt. Stress variations along the belt (and therefore elastic stretch of the belt) are caused by these longitudinal waves dampened by internal friction in the belt and material and resistance to motion.

Many publications since 1959 have documented that neglecting belt elasticity in high capacity and/or long length conveyors during stopping and starting can lead to incorrect selection of the belting, drive and takeup device. Failure to include transient response to elasticity can result in inaccurate prediction of:

- Maximum belt stresses and therefore belt strength safety factors, particularly in the splice
- Maximum forces on pulleys
- Minimum belt stresses and therefore material spillage, belt or idler damage
- Takeup force requirements
- Takeup travel and speed requirements
- Drive slip
- Breakaway torque
- Holdback torque
- Load sharing between multiple drives
- Material stability on an incline

It is important that a mathematical model of the belt conveyor taking belt elasticity into account during stopping and starting be considered in some applications. Fundamentally, the mathematical concepts used in current Finite Element Analysis are used for sequential time steps in Dynamic Analysis.

Since the mathematics necessary to solve these dynamic problems are very complex, it is not the goal of this publication to detail the theoretical basis of dynamic analysis. Rather, the purpose is to increase awareness of these analysis techniques with a more simplified description of the method.

A Belt Conveyor as an Electromechanical System

The components of the conveyor that have the most effect on starting and stopping are:

- Motor or brake
- Coupling or torque transmission device
- Drive pulley
- Belting and resistance to belt motion
- Takeup

The general mathematical model should contain mathematical expressions describing each of these components and the relationships between them.

Downloaded (14404) on April 24, 2017 by Patcharaporn Chotpitayasunondh, Muang, , Thailand
Document is issued and delivered by IHS Markit under the terms and conditions of the IHS Markit End User License Agreement for subscription documents. No portion may be photocopied, reproduced, scanned to an electronic medium or stored in a electronic retrieval system without the express written permission of IHS Markit. Any unauthorized use may subject violators to IHS Markit terms and conditions and applicable laws. All rights reserved. IHS Markit does not make any claim as to the accuracy of any data contained herein. IHS Markit neither endorses nor is responsible for the content of any linked websites. Questions, comments or concerns about this document: customercare@ihsmarkit.com
WWW.BELTCONVEYORBOOKS.COM

Belting and Resistance to Belt Motion

By far, the most difficult component to model is the belt itself. Many methods of analyzing a belt's physical behavior have been studied and various techniques have been used. The most commonly used method today is a rheological model. A few of the many types of rheological models used for describing the dynamic properties of belts include:

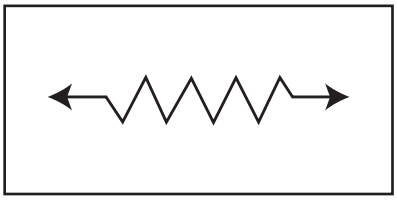

Figure 6.128
Elastic solid model

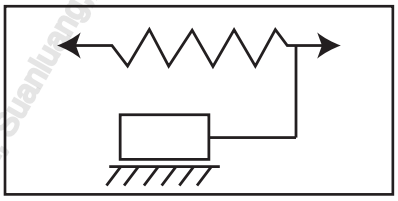

Figure 6.129
Elastic solid with Coulomb friction

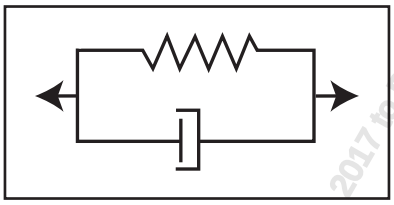

Figure 6.130
Kelvin solid model

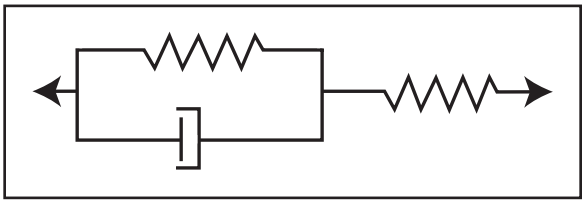

Figure 6.131
Three parameter solid model

Other models with more even parameters have been submitted to the industry for consideration. There is no single generally accepted model. An appropriate model for an application needs to address:

- Elastic modulus of the belt longitudinal tensile member
- Resistances to motion which are velocity dependent (i.e. idlers)
- Viscoelastic losses due to rubber-idler indentation
- Apparent belt modulus changes due to belt sag between idlers

Complete Conveyor Model

A model of the complete conveyor system can be achieved by dividing the conveyor into a series of finite elements. Each element has a mass and rheological spring as illustrated in Figure 6.132.

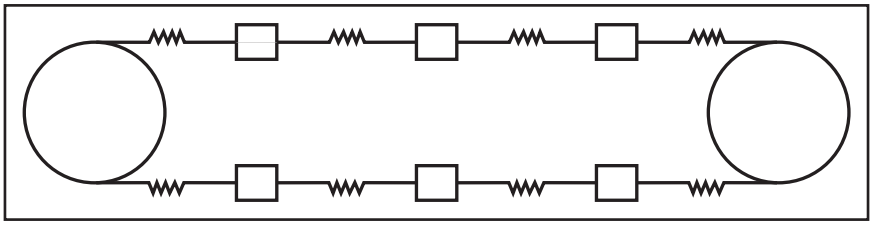

Figure 6.132
Model of a complete conveyor system

WWW.CEMANET.ORG has issued this document to Apr 24, 2017 to Pattarapom Sritrakool, Guanlueng, , Thailand

Any analysis must begin with initial conditions (t = 0). The assumed initial condition of this analysis comes from the steady-state running condition (static analysis). Since this initial condition is based on running at full speed, the first part of dynamic analysis must simulate the transient condition of stopping.

Stopping Simulation

Lumped masses are derived from material weight, belt weight, pulleys, etc. The composite rheological spring element is derived from the selected belt carcass and rubber covers properties and calculated resistances to motion as developed previously. Elements are initially extended to equal the calculated running stress in each element as illustrated in Figure 6.133.

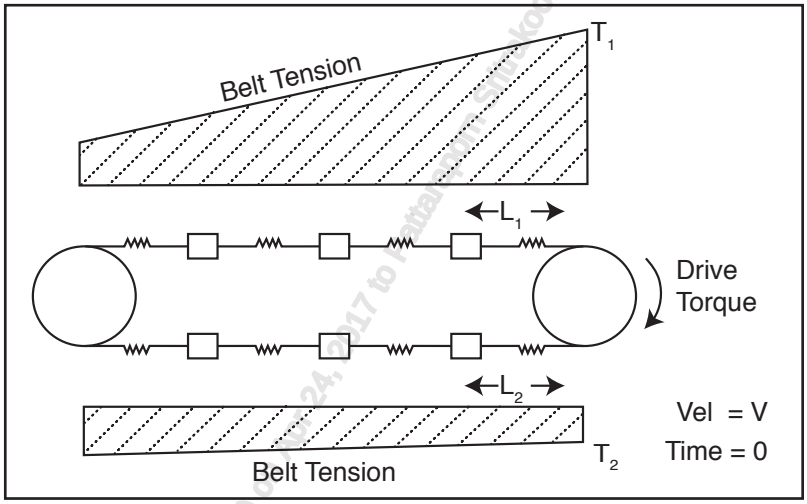

Figure 6.133
Running stress diagram

The difference between T_1 (tight side drive tension) and T_2 (slack side drive tension) in the belt equals the torque across the drive pulley while running which matches the torque applied by the drive. In this steady state condition, the velocities around the conveyor at each element are close to constant.

Figure 6.134 represents a time (dt) shortly after the drive torque is removed to simulate a free drift stop.

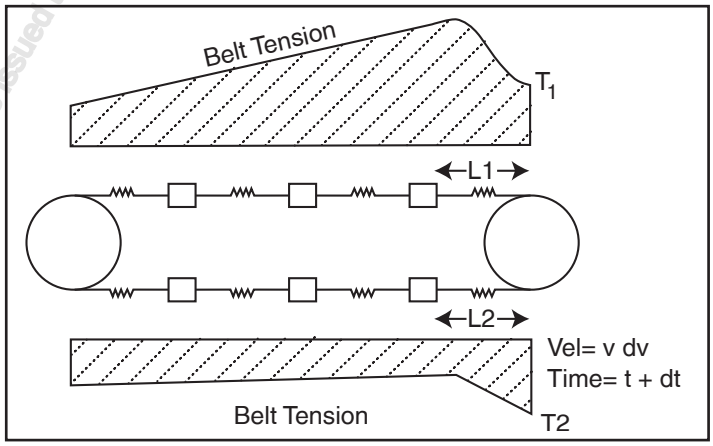

Figure 6.134
Free drift stop diagram

WWW.CEMANET.ORG has issued this document (3-604) on Sep 24, 2017 to Thailand Cement Technology (Thailand)

Figure 6.134 represents a time (dt) shortly after the drive torque is removed to simulate a free drift stop.

The sequence of events that follow are:

- The removal of drive torque, leaves the effective tension across the pulley (T_1 - T_2) unbalanced causing a rapid deceleration of the drive pulley.
- The velocity differential causes a shortening of the spring preceding the pulley and a lengthening of the spring past the pulley. The other spring lengths stay the same.

The change in the spring length causes a tension decrease between the pulley and proceeding mass and tension increase between the pulley and the next mass. The change in tension on one side of these masses causes a force imbalance on that mass and it begins to decelerate causing the force imbalance to propagate to the next mass. The result is a wave of decreasing tension propagating down the carry side of the conveyor and a wave of increasing tension propagating down the return side. These are often referred to as tension and compression waves.

In Figure 6.135, a gravity takeup pulley is added immediately past the drive pulley and the same scenario is modeled. Now the tension increase in the next element creates a force imbalance on the takeup pulley causing it to accelerate upwards. Since the takeup absorbs the tension increase, the return belt past the takeup is not affected by the drive torque loss until the "compression" wave propagates completely around the conveyor.

If a brake is applied to the drive pulley to stop the conveyor faster, a greater tension imbalance is created causing a faster velocity decrease and decreased stopping time. And of course, the resulting tension and compression waves will be larger.

www.CEMA-ET.ORG has issued this document (14604) on Apr 24, 2014 to Pattapon Sritarot, Thailand

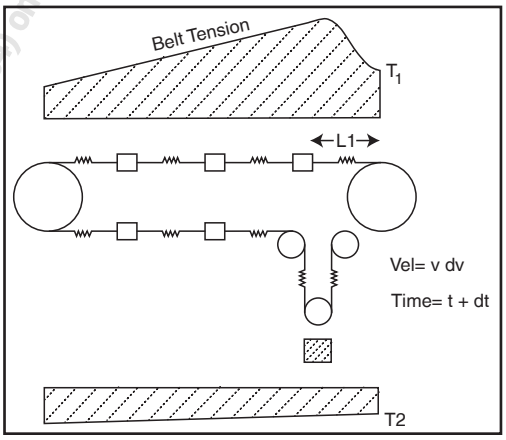

Figure 6.135
Free drift stop with gravity takeup diagram

Starting Simulation

Whether drifting to a stop or applying a braking torque, all belt velocities will eventually reach zero and the entire belt will be at rest (V = 0). These stopped conditions are then saved and used as the initial conditions for the next phase of the dynamic process: starting.

The exact same rheological elements and lumped masses are used during the restart. The only difference is now a mathematical model of the drive train during its acceleration phase must be developed and applied to the drive pulley.

There are many types of drives and starting algorithms to consider:

- Across-the-line AC motors
- Wound rotor motors with resistor step starting
- Reduced voltage solid state SCR
- Magnetic coupling
- Constant fill fluid couplings
- Variable fill fluid couplings
- Hydro viscous clutch
- DC motors
- Variable frequency AC drives

A direct coupled across-the-line start requires the characteristic speed-torque curve of the motor to be applied to the drive pulley. All other drive types require the adjustment of the motor characteristic torque according to the appropriate ancillary equipment.

All drive types can be placed in one of two categories; torque limiting or time limiting. An example of a torque limiting device is a constant fill fluid coupling. The geometry of the coupling, fill media and fill volume will dictate how much torque is applied to the conveyor belt. With this type drive, variations in total driven mass (different loads) will result in different acceleration times. A time limiting device such as a variable fill fluid coupling, can output a variable torque depending on a feedback mechanism. A preset acceleration velocity curve can be set and maintained no matter how much mass is being accelerated.

COMPONENT TENSION CHARACTERISTICS

The above discussions and calculations involve various components comprising a conveyor. Most of them are discussed in more detail elsewhere in this book but specific implications to the tension prediction are reviewed here. Where general or typical values for various parameters are provides below, they should be considered for preliminary design purposes only and reviewed and corrected with data from the actual component manufacturer.

Belt

The belt is often the most expensive component and critical to the success of the conveyor in general as well as the other components. The belt, through its construction materials and ubiquity, has a strong effect on movement resistance, transient tension calculation and with the forces imposed on the other components.

Energy Loss or Resistance

W_{mz} varies with the belt deformations at and between idler supports. It is affected by the belt modulus and construction. Similarly, the indentation loss K_{biR} is shown to be primarily affected by cover thickness though it is known to vary with various polymers, usually rubber, and with belt construction. The parameter values provided apply to most modern belts.

Belt Strength

Required belt strength is a primary result of the calculation methods discussed in this chapter. Belt strength, as used in this manual refers to the rated design strength, or maximum allowable belt working tension per unit belt width in units of pounds per inch of width, PIW, (or kN/mm). This operating design capacity is less than, but associated with, the breaking strength or the Ultimate Tensile Strength under steady increasing applied load through the belt Safety Factor. This ratio between Ultimate Tensile

WWW.CEMA-DVG.DE has issued this document (1960) to NN, 2014 NPRU from Siriraksool, Suanluang, , , Thailand

Strength and allowable working tension is a design factor incorporating the accumulation of alternating tensions around the belt circuit and when bent around pulleys.

Belt life is associated with tensile strength versus operating tension or the Safety Factor. In general, better belt carcass life will be found if the belt is oversized and with larger pulley sizes. In addition, the fewer pulleys and trough transitions that the belt sees, especially when operating near its tension limit, the longer will be the belt life. Longer belts at slower speeds are indicators of better carcass cyclic, or fatigue, life. The practices that increase belt life also significantly impact initial cost so that consultation with the belt manufacturer is recommended for long complicated conveyors.

Two major categories of belting should be recognized for major differences in strength capability as well as stiffness and weight. Belts with fabric carcass generally have less strength and more stretch than those using steel cables to support the belt tension. Even within these two broad categories, belt construction changes for varying strength also impacts component requirements such as the minimum pulley diameter, minimum width for troughability, takeup travel and allowable troughing angle. As described in Chapter 7, belt manufacturers provide limits for these for their belts.

Transient Load Safety Factor

The generally recommended maximum for starting or occasional transient belt tension as calculated in this chapter is 150 percent of the rating or allowable belt working tension. On conveyors with tensions under 75 lbf/ply-inch (13.1 N/mm) or the equivalent, the maximum can be increased to as high as 180 percent. For final design allowances, conveyor equipment or rubber belt manufacturers should be consulted. The belt conveyor designer should investigate acceleration stresses of conveyor components to insure that the overall stresses remain within safe limits. The belt may be able to absorb several tension cycles near this Tensile Strength but, if repeated, can fail catastrophically with serious safety implications.

Splice

The splice commonly has less strength than the belt. This can effectively de-rate the belt installation. In particular, improper mechanical splices (never used with steel cable installations) or ill designed vulcanized splices, control the maximum design tension. Since belt and splice failure is a progressive process, this can be accepted as a temporary solution but should be taken into account in the design process for permanent installations. Load cycles and bending effects can be particularly important to improper splices so that splice design or selection can control the belt selected or tensions allowed in a conveyor.

Belt Modulus/Stiffness

Belt flexibility in several directions is key to the function of the conveyor and integral to the selection of belt construction and strength. Most relevant to nominal belt tension is the recoverable or elastic stretch in the longitudinal direction. The following does not apply to inelastic or permanent break in stretch seen at initial tensioning at peak tension.

Longitudinal Stretch

As tension is applied to a belt, it stretches. The non -proportional longitudinal stiffness is approximated with a linear parameter called the belt modulus which applies near the normal operating tension. Units of lbf/in (kN/mm) of width are used for belt modulus, implying a nominal and irrelevant thickness. In a physical sense, this is the theoretical tension necessary to cause 100% stretch or doubling the length. Effectively, the belt modulus is a function of the carcass or steel cables since the covers and filler rubbers contribute much less to the total belt stiffness. Prediction of the stretch is important for installation and takeup travel.

www.BeltCon.co.th Copyright of this Journal (ISSN 1904) on 10 Apr 2017 by Pattarapol Chaiyen (Thailand)

Speed Of Tension Change

Belt stretch with changing tension is not instantaneous around the full belt circuit but propagates from the point of tension change to the rest of the belt at a high but relatively predictable rate of speed. Understanding the impact of the belt on transient tensions is important to decisions of component location and design although the prediction of this wave response often requires a dynamic analysis. This is especially true for stiff, high modulus belts such as steel cable constructions where low stretch in the carcass causes sharp, fast moving tension waves as well as less damping than with fabric belts which allow the rubber to stretch more. Consequences of transient tensions and the need for dynamic analysis is discussed in this chapter. The speed of propagation is difficult to predict precisely for several reasons but is estimated with sufficient accuracy as follows:

$$V_w = \left[\frac{E_b}{\frac{W_b}{BW \times g}} \right]^{0.5}$$

Equation 6.136

V_w, Transient tension wave front velocity

Cross Section Properties

The effect of construction on belt bending through its cross section can be seen in belt manufacturers' literature when investigating acceptable belt width for 'load support' and troughability. In addition, W_{mz} used in material trampling friction, is seen to vary with belt construction, primarily from cross sectional stiffness considerations. While belts are designed to nominal longitudinal strength and stiffness properties, the transverse stiffness may vary widely affecting the actual sag and therefore the agreement with the design values provided for $W_{mz.}$ The number of fabric plies affects the overall thickness and therefore the stiffness. Multiple ply belts will be stiffer and allow less deformation than reduced ply designs. Steel cable belts with fabric 'breaker' plies will be stiffer than those shown, especially in the transverse direction.

Belt Weight

The mass and consequently the weight of the belt affects the frictional resistance and inertial properties of the conveyor. The weight is primarily influenced by carcass construction and thickness and the cover thickness. This data is available from manufacturers' literature.

Idlers

The idler can have major and widely varying influences on the tension in the belt through elements of their design and of their application. Idler tension contributions for design purposes are discussed under Main Resistances and are affected by spacing, installation tolerances and CEMA Series or load rating. The values provided are suitable for standard or preliminary design but it should be recognized that idler construction varies widely and can have a strong affect on the actual contribution to the belt tension added to the belt. This section discusses idler elements in greater detail for proper use and appropriate application.

www.BELTAPP.COM has issued this document to [illegible] on Apr 20, 2017 - Dataflow, Shiraz, Iran

Idler Design Drag

Idler resistance is a combination of load dependent bearing torque as C_{iW} and load independent seal torque as described as K_{iV} and K_{is}.

The seal acts to keep the internal rolling elements of the bearing and the lubrication grease separated from the outside, contaminated environment. It does so by a combination of rubbing and viscous stirring of the bearing grease as well as its own grease if applicable. A major portion of the seal torque for the roll construction inferred by K_{iV} factor is due to grease filling. The amount of grease and the particular grease has a strong influence on resistance including strong interactions with temperature and speed.

The design values for $K_{i,}$ K_{is} and K_{iV} apply to modern greases used in temperate climates. Special greases may be used in areas with lower or higher temperature extremes to mollify the temperature effect while providing suitable bearing lubrication but will have different viscosities at moderate baseline temperatures. Consult a CEMA Member manufacturer for grease recommendations and particular modifications to these design values.

The actual resistance to rotation will be different, typically lower, than the design values provided as K_{i}, $K_{iV,}$ K_{is} and $C_{iW.}$ To a large extent, this is due to the particular seal design which is affected inversely to its intended effectiveness and also on the particular bearing design and capacity. The temperature and speed correction will be different depending on the portion of drag caused by the viscous resistance of grease versus Coulomb type friction of rubbing seals. When the idler resistance has a strong influence on the overall conveyor design, specific operating expectations should be obtained from the idler supplier.

For many conveyors, the portion of loss provided by the idler is small compared to the other components of conveyor resistance. Consequently, the advantage of having a readily available safe design value of idler drag (K_{iV}, K_{is} and C_{iW}) overcomes the importance of the particular value. However, when the conveyor design results in low levels of the other sources of tension loss (flat to downhill, very high tensions or precisely aligned conveyors), the need for precise control or limiting capital investment may justify special testing to obtain expected results for the particular roll design at the loads, speeds and temperatures anticipated in the conveyor design. If available, actual values should be substituted for the default values. In summary, when the idler resistance has a strong influence on the overall conveyor design, specific operating expectations should be obtained from the idler supplier.

Idler Lifetime Affects

Idler rotating resistance inevitably changes with continued rotation. Unless the roll is beginning to fail, the trend is for drag to decrease with life, everything else being equal. The biggest change occurs during its initial break in period with continued reduction at a much slower rate over the years.

The long term affects will decrease power consumption but will be within the possible low level recommendations of Modifying Factors R_{rim} for cases when inherent conveyor drag is counted on to maintain control of belt movement.

Initial empty conveyor operation should be monitored and controlled to a low level if necessary for 100 to 500 hours or until the idler rolls are broke in. If this is not possible, the design should anticipate initial resistance twice that indicated as design values. If all of the idlers are re-greased at the same time, similar results may be seen though break in will be much longer.

Idler Environmental Contamination

Components on bulk material handling conveyors are often exposed to severe environments including water, temperature extremes and fugitive materials. In some cases, components such as idlers, are even treated as wear or sacrificial components. As idler seals fill up and bearings wear out, the drag can increase markedly. If a significant failure rate is expected in particular locations such as loading points the idler resistances, both load independent and dependent, should be increased by a factor of 4.0.

www.CEMA.org Copyrighted Publication Material (c) 2011 All Rights Reserved

Alternately, if annual failure rates of greater than 5% are expected along the full length of the conveyor the idler resistances should be increased by a multiplication factor of one plus the monthly failure rate in percent divided by 50. This presumes idler rolls are replaced monthly. The above rule should be adjusted appropriately if the failed idlers are replaced more or less frequently.

Idler Spacing

The previous portions of this chapter describes the role that idler spacing plays with belt resistance and load control. With various idler capacities available, the trade-off between tension energy cost and investment cost can be analyzed.

For long belt conveyors, it is practical to vary the idler spacing so as to rationalize the sag of the belt as the belt tension increases. The number of spacing variations should be based on practical considerations, such as the number of different stringer sections in the conveyor support structure, so that the fabrication cost of the support structure does not become excessive. Usually, the spacing of troughing idlers is varied in 6-inch (150 mm) increments.

Idler Alignment

The implications of angular alignment of the idler roll axis on belt tension are discussed in the calculation of ΔT_{im}. Though the significance of this friction component varies widely among conveyor designs, the contribution to friction is shared among the idler installer, the manufacturer and the designer. In particular, long, flat, overland conveyors may often benefit significantly from special attention paid to minimizing this loss component. Garland idlers are not typically the first option. In addition, close attention should be paid to alignment of the conveyor structure and belt so that special tracking measures such as tilting idler frames or special training idlers do not have to be used. The benefit of special idler installation alignment tolerances can be predicted and implemented as well. The installation should be referenced from the center roll rather than the idler frame so that manufacturing inaccuracies do not enter the issue beyond the ΔA_{em} component.

For reference in reducing ΔT_{im} by special practice of improved idler alignment, the default effective value of 0.1 inches provided for ΔA_{em} results from analyzing the effect of 0.063 inches of average wing roll variance from parallel to the center roll in plan view. Linear adjustments may be made from this for improved misalignment loss prediction.

Tracking

During the course of the life of a conveyor, it may be inadvertently or intentionally moved. Loading may change and belts will often be damaged, re-spliced or replaced. The effect of these and other changing conditions may be seen as belt misalignment which is corrected by adjusting various idlers. It should be acknowledged that whenever the belt mis-tracks, lateral energy consuming forces develop.

Surface Friction

Idler and belt cover materials may be different than those described above in the section on belt and idler sliding. In this case, appropriate adjustments should be made to C_{bi} proportional to the difference in sliding friction between the generic materials and the special materials being considered. In addition, moisture or other environmental or chemical compatibilities with the bulk material may affect the above friction measures.

www.CEMANET.org (accessed Aug 21, 2017 to Pattarapol Sirikul, Suranaree, , , Thailand)

Idler Roll Run Out

Idler rolls will inevitably have a certain amount of radial variation as they rotate. This can be important to the running stability of the conveyor belt and to the loading on the roll bearing. Dynamic loading will alter slightly the belt cover indentation loss as well as the material trampling loss. These effects are usually minor contributors to the conveyor energy consumption compared to concerns for smooth operation and acceptable component life.

Roll run out, expressed as total indicated runout or TIR, can contribute to the tendency for the belt to flap between idlers and should be kept low when this belt and idler interaction is likely.

Idler Inertia

Idler rotating mass is essential to the transient analysis measures. These are provided as effected mass WK^2 in Chapter 5, or it may be estimated from roll thickness similar to pulley inertia described below.

Pulley

The pulley is primarily a rotating structural component and only has minor influences on the conveyor resistance to movement as described above. However, all of the active friction contributions are transmitted through the pulley as torque and contact friction so pulley design can have major influence on the conveyor design and operation.

Pulley diameter strongly affects belt life in conjunction with the local tension. In addition, various pulley geometrical features indirectly affect conveyor design and can cause damaging transitory belt stresses so must be guarded against. Local influences from diametral run out (TIR), wing pulley usage and cross sectional belt stress distribution from crown face pulleys can be important and are discussed elsewhere.

Torque Transferral

The capacity of an active pulley to transfer its torque to the belt is a key element of conveyor design. As treated above, this capacity, or allowable ΔT_e, is a function of the pulley wrap, T_{min} and contact friction, f, as established by the lagging material. Absent is any influence of diameter. This is a consequence of the friction formula in which the normal force between the belt and pulley does not vary with pulley diameter. That is, increasing contact area with increasing diameter is counteracted by decreasing contact pressure so that any net effect of diameter is canceled out.

The torque and speed ratios are affected by the pulley diameter and therefore influence the drive reducer ratio. The pulley radius used in these calculations should add the lagging thickness because it is not included when pulley diameter is used in a nominal sense. The average diameter over a crown faced pulley will also affect the actual drive ratio.

Pulley Diameter

Pulley diameter can have indirect effects on the maximum wrap because of space and geometrical restraints. For instance, in order to thread a new or replacement belt between the pulleys, a suitable clearance between pulley rims should be allowed. Likewise, the departing direction of the belt from the snub pulley (plus clearance for belt fasteners, etc.) must be below the deck plate or on the underside of the carrying idlers.

Gearing strength and ratio are benefited with small pulley diameters but minimum pulley diameter is usually established for various locations and tensions to protect the belt from excess bending. Larger diameters may be chosen to improve belt, splice and lagging life in severe applications or to improve maintenance access. Standardization often comes into play as well when selecting pulley diameter. Pulley diameter variability or tolerance can be important with multiple drive arrangements (see drive location interactions).

www.CEMA-[illegible] has been downloaded on 7/12/2017 to IP 202.[illegible] from Sriracha Pool, Suchiang, Thailand

Lagging

Though protection from wear is important, improved drive friction is usually the primary purpose for lagging an active pulley. The friction factor, f, used for design, is an imprecise value but the values provided in this chapter have proven successful for most installations. They should be used unless specific test data for a full scale pulley and belt is available.

The wrap factors C_w, developed from f, do not determine T_2 but only establish its safe minimum value for design. A wet belt and pulley will substantially reduce the power that can be transmitted between them because of the lower coefficient of friction of the wet surfaces. Various expedients, such as grooving the lagging on the pulley, lessen this problem and are important if non ideal conditions can be anticipated. However, the best solution is to keep the driving side of the belt dry. If this is impractical, increasing the wrap is helpful, or providing some means of increasing the slack side tension, T_{min}.

The values of f provided for design have been found to be safe when they are in proper condition as designed to transfer torque. That is, as rubber wears or hardens, its driving capability gradually diminishes. Heavy coverage of water or other materials also interfere with the rubber to rubber contact required for good friction. Likewise, ceramic or hard pulley covers must have rough aggressive surfaces for maximum coupling. Clearly, the damage from slip goes up in this case but the f recommended for design has additional safety margin hedging that risk. If possible, ceramic lagging friction factors specified by the manufacturer should be used.

The lagging must deform circumferentially since the belt shrinks or shortens as its tension changes from T_1 to T_2 . Since the lagging and belt cover are not infinitely compliant, this implies a varying portion of the limit friction, f, will be used along the contact length. This tangential variation is further compounded with short transition distances, crown pulleys etc. When all of these influences occur together, limited or local slip can occur. This may not be enough to cause global or full pulley slip but can lead to lagging wear and noise. In some applications it may be appropriate to add a safety factor to the allowable friction factor to guard against this.

Structural Implications: Running vs Transient Loads

The pulley design is primarily governed by the belt contact angle or wrap and the belt tension that it sees for the major portion of its operating life. Usually, these are the tensions at conveyor design capacity under steady running conditions. Transient tensions up to 150% of these are allowed if they occur less than 1% of operating cycles. Alternatively, the design tension is increased by these commonly occurring transient stresses divided by 1.5.

Pulley Inertia

Though pulleys are heavy, they are slow moving and somewhat infrequently distributed along the conveyor so their total contribution to conveyor inertia will be relatively small. Nonetheless, for thorough design analysis their contribution to WK^2 should be incorporated. These values can be obtained from the manufacturer or estimated from the pulley weight. Since pulley weight is usually concentrated at its outer diameter its inertia can be estimated by its weight (disregarding shaft weight) as:

$$W_{ne} = W_n$$

Equation 6.137

W_{ne}, Equivalent pulley weight

www.CEMA-ET.ORG has issued this document (1/1/00) on Nov 21, 2021 to Pongpong Sriwarom, Siamtech Co., Ltd., Thailand

Where:

W_{ne} = Equivalent translating weight of pulley "n"
W_n = Weight of pulley "n" without shaft

Drive Components

The engineering of practically all belt conveyor installations involves a comprehensive knowledge of the proper application of conveyor drive equipment, or active tension suppliers, including speed reduction mechanisms, motors and controls, and safety devices. This part of the design discusses the components comprising the drive system which includes a drive, commonly a brake and their control. Each of these includes components which vary widely. This section discusses the implications or requirements of various components on belt tension while the components themselves are treated in Chapter 13. Though the following discussion addresses the application of electric motor drives and controls, hydraulic or internal combustion prime movers are common on portable equipment, The same concepts apply to these and other propulsion principles and devices.

Torque and Power

The Active Tension section introduced the use of pulley torque from the belts perspective as follows:

$$\Delta T_{em} = \frac{T_{qn}}{\frac{D_n}{2}}$$

Equation 6.138
ΔT_{em}, Pulley torque

Where:

T_{qn} = The active torque provided to pulley "n"
D_n = Pulley diameter

The low speed torque at the pulley is provided by an active tension component usually rotating at a higher speed but lower torque. This may be called the high speed part of the drive system. Except for inefficiencies, both have the same power or rate of energy applied. Power is calculated differently for linear and rotary movement.

$$P_{bn} = \Delta T_{en} \times V$$
$$P_{dn} = \frac{P_{bn} \times SF_d}{E_n} \quad [hp\ (kW)]$$

Equation 6.139
P_{dn}, Power transfer in a conveyor drive

WWW.CEMANET.ORG has issued this document (14604) on Apr 24, 2017 to Patterson Conveyor Solutions, Shanluang, , , Thailand

Where:

P_{bn}	= Linear power seen by the belt at pulley "n"
P_{dn}	= Minimum rotary power required from drive applied to pulley"n"
E_n	= Efficiency, or power loss, between drive "n" and belt (dimensionless)
SF_d	= Safety factor for active pulley "n" for various considerations (dimensionless)

The size or capacity of most conveyor drive components are rated in terms of both torque and power, though one or the other is the primary selection criterion. The capacity of the active components, P_{dmaxn}, should be established from reviewing the various operating conditions. Steady operation and transient ratings are, in general, different. Efficiency will be a number less than 1.0, that is E_n= (1.0 loss ratio).

The active pulleys can be asked to accommodate a range of special conditions justifying an additional SF_d when at their maximum capacity. The designer's confidence in the analysis as well as the possibility of special events justify a nominal over sizing of these components to prevent disabling the entire conveyor. In the case that the particular material and components in a particular design are well understood and inserted directly into the loss predictions, SF_d =1.1 is appropriate to accommodate the accuracy of the calculation methods.

Note, this value of SF_d should be prorated for the amount of ΔT_{en} caused by gravity versus the total predicted ΔT_{en}. Other justifications for SF_d include:

- Potential for temporary overloading of the belt
- Potential for breakaway during freezing conditions
- Failure of other components

These scenarios can cause damage or accelerated wear to the other components of the system but do not have the safety and operating consequences that occur when the belt is not able to be moved or stopped.

Drive Inertia Considerations

The belt conveyor, due to its high moving mass, stores a large amount of Kinetic Energy in its movement. This has to be supplied by the drive during startup and can enter into the design and rating of the appropriate drive. Depending on the slope(s) of the conveyor and the required stopping time, the Kinetic Energy which must be dissipated during braking may be a controlling factor of the design. Managing the belt's large inertia is part of the drive design.

The drive components themselves, because of their high speed, can be important portions of the total momentum (inertia is proportional to N rpm squared) of the conveyor and need to be included when calculating system inertia. Motor rotors, coupling components and gears inertias should be obtained from their manufactures and summed in proportion to their speed squared. Because of their location, control, and characteristics, these can often be managed in the design process for desirable conveyor operation. For instance, by mechanically disconnecting a drive, the deceleration tensions may become smaller and more or less uniform around the belt circuit.

Additional mechanical control of starting and stopping transients can be accomplished by means of a flywheel. Flywheels are often a simple round plate mounted to the motor, gearbox or pulley shaft so that its contribution to the conveyor inertia may be calculated as follows.

www.conveyor-training.com Bulk Material Movement (24824) on Apr 21 2017 to Prapan Sirikul (Quantum Engineering, Thailand

$$W_{fe} = W_f \times K_f^2 \times \left(\frac{2 \times \pi \times N_f}{V}\right)^2$$

Equation 6.140
W_{fe}, Flywheel effective mass

Where:

W_f = Weight of flywheel
N_f = Rotating speed of flywheel
$K_f = \frac{D_f}{4}$ = Radius of gyration of a flat round plate
D_f = Flywheel diameter

The flywheel will often be mounted to rotate at the high speed of the motor to minimize its size and weight. Special attention should be addressed to smooth balancing and proper torque connection to the shaft from the expected rate of acceleration and deceleration.

Drive inertia, because of the rotary motion of its mechanical components, is quantified by $\Sigma(W_r \times K^2_i \times 2\pi \times N_i/V)^2)$. The WK^2 of each component is multiplied by its individual speed before totaling.

Drives

A drive is considered to include the motors and associated equipment connected to a particular pulley. In some cases, multiple pulleys with their drive sets are considered one drive when they are located next to each other. Unless coupled mechanically or with dependent control, each pulley with its components should be analyzed separately.

In addition to the motor(s), each drive will include speed reducer(s) as well as bearings and couplings for support and connection to each other and the pulleys. These components will contribute to the inertia of the system as well as the inefficiency or power transmission loss of the drive. The speed reduction needed from the reducer is the ratio of motor revolutions per revolution of the pulley stated as R:1 where:

$$R = \frac{N_{motor}}{\frac{V}{\pi \times D_{pn}}}$$

Equation 6.141
R, Drive speed reduction ratio

Where:

D_{pn} = Pulley diameter including lagging
N_{motor} = Motor rpm
V = Belt speed

Speed reducers typically have a uniform torque rating but it can vary with speed due to limitations on heat absorption and/or rejection and the effect on their efficiency ratio.

The motor will usually be sized by its power output or its nominal full load torque rating at full or rated speed. Motor nameplate power and torque must be greater than P_{dn} calculated under full load and full speed or whatever is the highest sustained running requirement of the conveyor. The motor typically can

WWW.CEMANET.ORG has issued this document (5464) on Nov 24, 2017 to Patcharin Srithiboon, Suanluang, , , Thailand

provide higher torque and power at slower speeds, depending on its design. This extra capacity is used during startup or with transient loads but will cause motor overheating if required for too long. The motor that will drive a fully loaded belt conveyor without becoming over-heated may not be able to accelerate the loaded conveyor from rest to the design speed. Just as important as the nominal rating is the selection of motor type and torque control for its ability to provide sustained startup torque. To insure adequate starting capabilities, motor manufacturer data should be used to assure that startup torque and time do not combine to exceed the motor's thermal rating. Motors most suited to the high inertia of conveyors have a relatively long and flat torque-speed characteristic such as NEMA C and D motor designs or those equipped with fluid couplings. When quasi static or rigid startup is being analyzed it is useful to use a starting factor as the ratio of the accelerating torque to the full load torque of the drive.

Smooth, slow starting of a conveyor belt is always less damaging to the conveyor components and essential to prevent high transient stresses and unstable operation for long conveyors with stiff belts, excess torque or curves. Depending on the conveyor size, desirable startup and transient torque is frequently supplied with torque-control designs, mechanical or electrical, passive or active, or combinations. Passive control results from a fixed characteristic inherent to the mechanical components of the drive. Active control is designed to react to the particular startup conditions at the drive and also at other points on the belt circuit.

Smooth startup is usually accomplished in one of two ways:

- A separate component modifies the motor torque supplied to the pulley through internal 'slip' so that the motor or drive speed can be different than the conveyor or driven speed. Hydrodynamic devices, or fluid couplings, are the most common although slipping clutches, hydrostatic or magnetic/electrical approaches are also used. Mechanical and electric slip involves energy loss so that the thermal capacity and efficiency of these devices should be considered. Required cooling time may affect the allowable frequency of restarting. A small continuous slip as well as internal fluid or current flow also cause losses that may cause inefficiencies in these devices.
- The motor speed is electrically controlled so that the torque required/supplied is compatible with the conveyor and its own thermal needs. The motor type used is inherent to the design of this type of control as discussed in Chapter 13.

For coordination of drives, active control to passive components, with or without feedback, are appropriate for complicated conveyor designs and multiple drives. These include variable fill fluid couplings and Variable Frequency Drives or other electrical control methods.

The following rules of thumb for shorter, basic conveyors can also be used in lieu of calculating the mass and acceleration of the conveyor:

- The locked rotor torque of the motor should exceed the sum of the torque required to lift the material, plus approximately twice the torque required to over-come total conveyor friction, despite any possible voltage deficiencies that may exist during the acceleration period.
- The motor speed-torque curve should not drop below a line drawn from the locked rotor torque requirement to the torque of the running power requirement at full speed.

These or other simplified or averaging methods are not suitable for multiple drives, long, horizontal conveyors or for declined conveyors. In those cases, a full dynamic analysis, incorporating the motor characteristics should be used to evaluate heating potential for various transient operating conditions.

When energy must be absorbed continuously, as on a conveyor with major decline sections, a regenerative motor and control should be used. The motor is made to function as a generator and the electricity

WMCEMA Member Purchased Document 04/20/2017 to Patzaphel Stanley, Jackson, Tobias

created is re-supplied to the power grid or wasted through resistive heating. Regenerative drives also allow integrating transient braking into a simpler, more efficient system.

It is good practice to consider the installation of a creeper drive as part of the drive equipment in climates with low temperatures where the belt may stiffen or ice may form on the conveyor belt or from other conditions resulting in startup problems. The creeper drive consists of an auxiliary small motor and drive machinery, which, through a clutch arrangement, takes over the driving of the empty conveyor at a very slow speed. This creeper drive is arranged to be operative at all times when the conveyor is not handling any load, thus preventing the formation of harmful ice deposits on the conveyor belt. In addition consider creep drives in applications where the belt may stick to components making it difficult to restart due to the nature of the bulk solid or process. Creeper drives are normally run at about 10 percent of normal belt speed. The creeper drive can also be used to provide an effective means for inspecting a conveyor belt.

www.CHAMCT.CR Issued to: Department (14604) TUE Nov 24, 2015 08:08:04pm Srinakharinwirot University, Thailand

Brakes

A brake is an active, bidirectional friction device for bringing a conveyor belt to a controlled stop. Because of the energy dissipation that is required a brake is usually used during transient movement or load conditions, although a brake can also see continuous duty or running over a particular length of time with various combinations of loading on inclines and declines. Belt Kinetic Energy is converted to thermal energy or heat in a brake. This heat must be dissipated or wasted. Implications to the overall efficiency of the conveyor as well as the size and cost of the brake often encourage integrating energy removal through 'regeneration' into the drive rather than the brake.

Brakes are sized by torque capacity, thermal capacity, or the maximum energy that can be absorbed, and for its heat dissipation rate affecting acceptable repeat stops. Active control similar to drives and fail-safe considerations also come into play with brake selection.

Backstops

A backstop is a unidirectional mechanical device that allows the conveyor to operate only in the desired direction. It permits free rotation of the drive pulley in the forward direction but automatically prevents rotation of the drive pulley in the opposite direction. This prevents the belt reversing and the material rolling back down an incline when the motor is not energized or other failures occur. Actuation is automatic and inherent to these mechanical devices so control is not an issue.

Though the calculation of roll back can be made comparing lift and friction, a common rule of thumb is when the tension required to lift the load vertically is greater than one-half the tension required to move the belt and load horizontally, a backstop or brake is required. Because a backstop is a safety device, it is important that the friction forces that retard the reverse motion of the conveyor are not overestimated. Low levels of R_{rxx} and low tension extremes of conveying friction with all active ΔT_e's = 0 should be used.

Backstops are rated on the basis of the torque they can safely develop. This is the T_{qn} required to prevent reverse movement or roll back when all other active ΔT_e's are zero. Inclines act as declines when analyzing backstop torque so the low friction condition R_{rxx} for the Main Resistances should be used.

Backstops usually have a small dead band or reverse movement before they lock up and torque is suddenly applied. Any Kinetic Energy that develops from this rollback must be absorbed by the backstop. Its internal deflection and especially that of its reaction mount, usually a long arm, govern the added torque that develops from this rollback. In design practice, the backstop is usually sized to prevent accidental damage under the condition that the conveyor jams and the belt is stretched to the maximum locked rotor torque capacity of the motor. This is further discussed in Chapter 13.

Multiple backstops are not recommended because the angular 'dead band' is not predictable so that torque sharing cannot be assured. If multiple backstops are necessary they should be mechanically interconnected or should have 'soft' well designed supports to allow prediction of torque sharing. The backstop manufacturer should be consulted for these designs.

Because backstops are unidirectional, brakes are used instead of backstops on inclined reversible conveyors. Backstop and brake recommendations for conveyors in normal operation or when stopped are summarized in Table 6.142.

Type of Conveyor Lay-out	Backstop Recommendation	Brake* Recommendation	ΔT Forces to be controlled
Level or horizontal conveyor	Not Required	Not Required	None except when decelerating
Inclined conveyor	If net forces cause roll back (ΔT<0)	Not Required	- Lift tension + Main Resistances (at minimum R_{rxx} values)
Declined conveyor	Not Applicable	If net forces cause roll on (ΔT<0)	Lift (negative) Tension + Main Resistances (at minimum R_{rxx} values)
Undulating conveyor	Not Applicable	Required if ΔT<0 (Likely if slope greater than net effective friction factor)	Various conditions must be evaluated to determine forces to be controlled
Simple reversing conveyor	Not Applicable	In combination with above conveyor lay-out recommendations	In combination with above conveyor lay-out recommendations
* Brakes may be required for transient conditions for all conveyors			

Table 6.142
Backstop and brake recommendations

Drive System and Control

In addition to compatible control of various components and functions, a well designed conveyance system will have a unified control interconnecting each conveyor as well as other conveyors and machinery used in the process. These control systems can have a wide range of power devices, sensors and controllers governing and coordinating various operating modes. In particular, the control for an individual conveyor must interconnect its active components so that they work together and are compatible with their mechanical interconnection to the belt. The control may simply supply power to a motor for the simplest conveyor, be pre-designed to initiate certain actions at certain times or sequences, or it may respond to feedback from sensors or active drive components integral to the active drive elements. The various component interactions are passive characteristics that may need to be incorporated in the control design. Specific control requirements may include:

- Provision for emergency safety stop, usually using a pull cord switch must be provided along the full length of the conveyor.
- Brakes that automatically engage when power is disrupted
- Initiating startup or shutdown
- Coordinating multiple drives and brakes
- Sequencing or coordinating conveyors
- Limiting drive or brake ΔT_e to that compatible with its T_2
- Closely coordinated or sequenced actions of various components
- Actively controlled takeups See Chapter 13 for details and components used for these purposes.

Provided by IHS Markit under license with CEMA
No reproduction or networking permitted without license from IHS
Not for Resale, 12/24/2014 08:14:04 MST
Document (1/1/14) on Apr 24, 2017 to Patcharapom Chirakul Chuanchuang - Thailand

Takeup

Minimum belt tension requirements calculated in previous sections are applied to the belt with components called takeups. The takeup simply moves a pulley to stretch the belt and to cause a reaction force in the belt. The takeup can have a major effect on overall conveyor reliability and efficiency. Applied belt tension and the takeup travel, or the range of pulley movement, are the primary design parameters. Required travel is the sum of that required for belt installation and splicing, initial or nominal tensioning and movement accommodating stretch from changes in operating tension. Conveyor length, belt modulus and operating tension have the primary influences on the travel. Refer to Table 7.23. Various locations and operating principles are used depending on space available, travel required, and conveyor system requirements. Figure 6.143 shows several takeup locations including various geometries and terminologies. The serpentine path of the belt through the takeup often includes a drive pulley for simple and compact installations.

WWW.CEMANET.ORG has issued this document (4604) on Apr 24, 2017 to Pattarapom Sritarapipat, Suranaree University of Technology

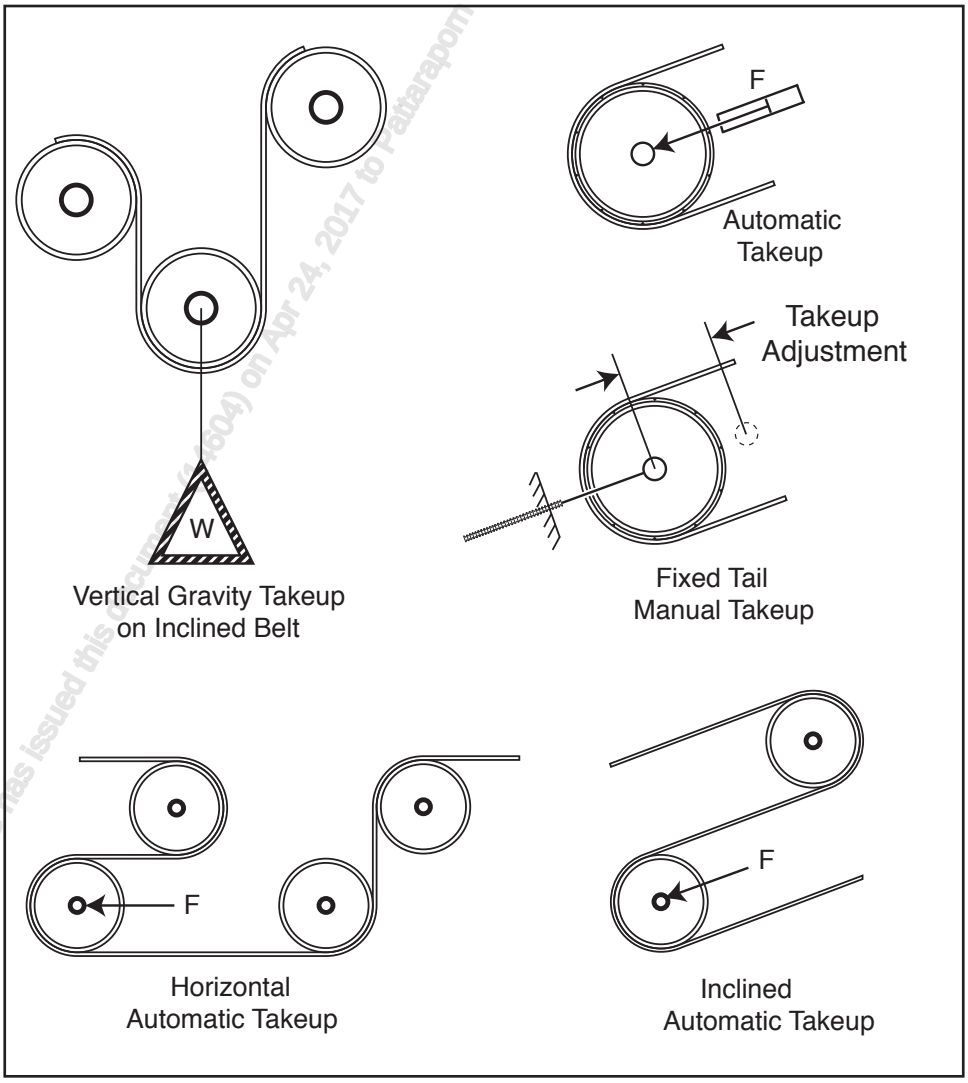

Figure 6.143
Common representative configurations for takeup pulleys

Constant Tension from Automatic Takeups

A takeup that moves to automatically maintain 'constant' tension, despite varying belt stretch due to changing tensions throughout the conveyor, is used almost universally for conveyors with lengths over several hundred feet (over 100 m). Although active, or powered, mechanisms are used in many applications, the most common design is a passive design using the gravity force from a weight attached to the moving takeup pulley.

The nominal tension maintained in the belt is that necessary to support the weight. In the simple and most common case of a vertical 'gravity' takeup, the takeup tension is half of the takeup weight. In the horizontal or translating cases the tension or weight calculation is a straight forward force balance resisted by the tension in the belt near the takeup. A horizontally moving takeup pulley will often be used with the gravity loading transferred through wire ropes or other passive mechanisms due to space concerns and to accomplish design needs of reduced weight or, conversely, weight travel. In this case, the nominal tension versus the weight relationship varies with the rope reeving or mechanical advantage and friction in the rope system. Similarly, when the takeup pulley is on a inclined carriage or the belt reactions are not parallel to the takeup movement, a vector or trigonometric analysis for equilibrium of the forces on the takeup pulley must me used. Moving components including pulley, shaft, bearing, carriage or structure as well as added weight contribute to belt reaction and should be used when calculating the belt tension at the takeup pulley. Consideration for the possible weight of fugitive material or ice on the takeup mechanism should also be included in the analysis.

Only one passively reacting, moving, takeup pulley can be used on a conveyor since small force imbalances inevitably allow all but one independent takeup from migrating to the top or bottom of their range of motion, effectively disabling it.

Active takeups designs, usually horizontal, are also common, especially when space and portability justify are important. These use external power to maintain the force on the takeup pulley. Constant pressure hydraulic cylinders or constant torque winches are commonly used with active control maintaining as stable or, in some cases, a situation specific optimum tension. Active takeup force mechanisms commonly use wire rope reeving to exchange force capacity with movement range as needed. Resulting belt tensions are calculated as described above using the force from the active component instead of the takeup weight.

Fundamentally, takeups are simple mechanical devices designed on basic force balance assumptions. However, its intended operation of tension control affects the entire system so proper design, selection and maintenance of these components is a key to stable proper and safe operation of the conveyor.

The implications of a non-moving takeup pulley are dramatic. Therefore, freedom of movement within guides or on rails is a major design need. In addition, the actual operating dynamics of the takeup components and system must be understood and incorporated into the conveyor tensions as discussed in Dynamic Analysis. Alignment and free travel of the takeup pulley is critical to a properly operating takeup. If the takeup pulley can tilt in the Y or Z axis due to very loose fitting guides (See Figure 6.4) mis-tracking will result. It is recommended that the vertical guides for vertical gravity takeup pulleys be at least 2.5 times the belt width. If the takeup guides are too tight the pulley support mechanism can jam and the passive control of belt tension will be lost resulting in fixed belt stretch and tensions higher or lower than expected. In extreme cases sticky pulley supports and guide systems that suddenly release the takeup pulley and weigh damaging the structure or cause a catastrophic belt failure.

Takeup Tension Deadband

In addition to the nominal tension, two types of takeup deadband can be important to the tensions seen by the conveyor. Deadband is the deviation or offset from ideal stretch compensation at fixed tension.

www.CEMAonline.org has a secure (https) site. Apr 14, 2017 10:18 AM (Guangzhou, China)

Hysteresis

Hysteresis in the takeup mechanism results in a range of force rather than a constant value seen at the takeup pulley. This is inherent to, and part of, the design of active control components, but also a result of the friction in the takeup force transfer mechanism.

Automatic takeups alternately move out, as the takeup force is applied to take up belt elongation from added tensions in the conveyor, and are then pull back in as the belt shortens with reduced tension. That is, the takeup should be seen as doing the pulling but also as being pulled on. Depending on the takeup mechanism, these two modes cause different reaction forces. Commonly, friction in the takeup system alternates direction so that the effect is to develop a deadband around the nominal expected tension where no movement or tension correction takes place. Deadband in control feedback also limits the accuracy of the tension correction. Chapter 15 discusses these on more detail. The range of tensions possible at the takeup from hysteresis should be considered for both the minimum required tension and the maximum tension loading.

Takeup Reaction Time

Delay time is another deadband that affects the actual tensions, especially transient tensions, seen along the conveyor. This time delay develops from the speed of reaction and movement of active takeups and the acceleration from zero speed of the passive or gravity designs. In addition, any tension or stretch correction can only be made after the tension change is seen at the automatic takeup. This time delay depends on the distance between the takeup and the active tension change and also on the belt wave speed discussed in the belt section above. The specific affect of these delays is difficult to predict with the simplified "Static Transient" analysis but is discussed relative to location and for possible transient affects on the conveyor system interactions. A dynamic analysis is frequently needed to fully evaluate the effect of reaction time.

Constant Belt Length Fixed Takeup

Many conveyors have no moving pulleys to accommodate belt stretch though they inevitably have a movable pulley for ease of installation and adjustment. These are called fixed, manual or screw takeups when a threaded rod or other mechanism is used to move the "takeup" pulley to pretension the belt during installation. Though the running tensions are inevitably higher than for automatic takeups, fixed takeups are common for short conveyors for cost and space considerations.

Takeup design decisions primarily involve travel and load capacity. During steady state running, the conveyor can be thought of as having no takeup but the minimum or baseline tension established by pre-stretch is still an important consideration as to how it affects minimum tension requirements. Specific designs are discussed in Chapter 15.

Actual tension is difficult to establish with screw type designs and is constantly changing as tensions and belt stretch change in the rest of the conveyor. Approximations for the initial tension can be made based on screw torque or belt modulus but these are rough estimates at best due to variability. Movable takeup pulleys are usually tensioned during conveyor commissioning by 'trial and error' or by 'feel'. Therefore, they are prone to over tensioning. Hydraulically actuated takeups equipped with pressure gauges have the benefit of a known tensioning force. Likewise, load cells can be justified to improve the tensioning accuracy. Nonetheless, the nature of a fixed takeup causes constant tension fluctuations at all points along the belt, including the takeup itself. This is discussed as a system interaction in this chapter. Unless detailed analysis is done and pre-tension can be known reliably, the design tension assumed to be applied when designing the rest of the components should be 1.4 times that needed for steady state minimum tension requirements.

In some cases, springs or cushions are used to buffer the takeup pulley from the framework. These may be

effective for muting a sharp tension wave but the Potential Energy capacity is much less than the system so the net effect on belt tension is negligible.

Loading Point

Material Entry Geometry

When material is discharged from chutes or feeders to a belt conveyor, it cannot be assumed that the material is moving in the direction of belt travel, at belt speed, although this may be the case in some instances. Normally, the material loaded onto the belt is traveling at a speed considerably lower than belt speed. Therefore, the material must be accelerated to the speed of the belt in the direction of belt travel, and this acceleration requires additional effective tension. The calculations in this chapter are simplified but appropriate for tension and power calculations in most cases. The energy of acceleration is also imparted to the belt and material with proportional damage potential to both. As discussed in Chapter 12, both effects can be understood and optimized by analyzing the flow path of the material being loaded to minimize $V - (\sin(\theta_i) \times V_0)$. See Figure 6.16.

Receiving Belt Equipment

The need for energy absorption and control of the bulk material landing on the belt at the loading point has led to a wide range of equipment and design approaches to sealing and bulk material control at the belt loading point. In many conveyors the affect on belt tension is minor compared to the accumulated belt resistance but should be understood for thorough tension prediction. In many cases, component manufacturers can provide specific details.

Plugged Chute Condition

If a plugged chute is a possible condition, provide sufficient drive startup torque to empty it. The extra force from this condition is best calculated as if it were a feeder but may be estimated by the weight of material in the chute times a friction factor between the belt and bulk of 0.5, if not known.

Accessories

Accessories or special purpose devices can provide added drag, usually as point sources. Though these will usually be minor compared to friction and lift over long distances they should not be overlooked for small conveyors or where multiple occurrences are used. Their tension contribution should be obtained from manufacturers, measured or otherwise estimated. The actual drag provided by many accessories may be significantly less than the design equations indicated under 'Point Losses'. Analysis under transient conditions or for regenerative conveyors should include the consequences of no loss from these components.

CONVEYOR AS A SYSTEM

Prior sections of this chapter reviewed specific components and their independent contributions to the conveyor operation. This section treats the conveyor as a system of components interacting as a single machine and the effect one component can have on another. In the following, individual components are treated as having a single set of characteristics. It should be recognized that each component is made up of multiple subcomponents and various sub interactions combine to define a wide range of net characteristics for each. The perspective of this chapter is that proper design comes from an understanding and thorough analysis of possible actions and effects. This section discusses many of these and provides direction for their treatment in the design process.

WWW.CEMA.ORG has licensed this document (1.1MB) on Apr 25, 2017 to Patarapon Sirakoolwong, , , , Thailand

Optimization

Minimizing costs of initial investment and operating costs, including those for energy, maintenance and downtime, are an important part of the design responsibility recognizing that reliability has a major impact on the operating cost over the lifetime of the conveyor. The design task is therefore additionally complicated by this added but essential measurement of design success, with its own varying issues, which must be evaluated after a particular set of design details are fully established using the methods described in this book. The discussion and practice of optimization is integral to the understanding of belt and component interaction. Life cycle costing is a technique frequently applied to such non engineering analyses for component selection.

Component Implications

Component costs are a major portion of the initial investment and have a dominant affect on operating cost through availability and maintenance issues. Just as for other judgments or qualitative parameters in the design such as allowable sag, accessible locations, control need, etc, the acceptable parameters for component sizing should be established independently of the conveyor calculations themselves but as compatible inputs to obtain a balanced overall design with consistent reliability.

In the process of evaluating and optimizing a particular conveyor, component sizes and cost will vary with their location. Therefore, it is important, for cost optimization, to establish uniform benchmarks for reliability of the various required components independent of the component capacities, through consistent value of the components used to make up the conveyor. In many cases a single level of design safety margin is apparent from similar conveyors in similar operations. In others, it may be appropriate to investigate several reliability levels for their influence on competing trends between initial and operating cost. Additional considerations for various components are based on their availability, the characteristics of their failure mode (do you have warning?) and especially the safety of operating personnel. These issues are discussed elsewhere in this book but it is important that they are clear and consistent before addressing the various conflicting elements of the tension analysis phase of the design.

Maximum Belt Tension

Because the belt is among the most costly components and the full belt length must be sized for the maximum tension, T_{max}, it sees around its path, minimizing the maximum belt tension, both running and transient, is a primary design goal for minimum installed cost.

Active Pulley Locations

Just as for takeups locations, the designer often has control over the number and location for the drives and brakes of a conveyor. A conveyor is said to overhaul the drive when the drive becomes regenerative. Several generalizations may be made for simple conveyors:

- For conveyors that do not overhaul the drive, the minimum belt tension on the carrying run will usually occur at the tail (feed) end.
- For conveyors that do overhaul their drive, the minimum belt tension will usually occur at the head (discharge) end.
- Regarding brake location, an analysis of the belt tension distribution during deceleration should be made to determine the appropriate pulley on which to apply the brake. The braking force will be additional to the friction and positive lift forces. If the brake is installed on a head-end drive pulley the automatic takeup force must be sufficient to transmit the braking force through the takeup.

WWW.CEMANET.COM (Copyright Material) Document (4.0) 2-10-2015 (c) Prapanee Sitrakool, Suddhi Co., Ltd.

Though head drives and tail brakes are commonly used so as to minimize the tension that must be supported by other pulleys and to minimize total belt stretch, cases exist where this paradigm should be reevaluated, usually involving conveyors with declines. Multiple drives and other drive interactions are discussed in more detail as influenced by belt stretch considerations.

Minimize Tension at Takeup

The belt tension distribution around the belt path can be looked at as the ebb and flow of passive and active energy exchanges added to a constant baseline tension provided by an active or "constant tension" takeup. While much of the energy transferred to and by the belt are inherent to the loading and path, the takeup tension, T_{tu}, is a consequence of other design decisions. These decisions should therefore consider their affect on T_{tu}.

Tension vs Energy Cost

In some cases where the trampling loss, ΔT_{mz}, is high compared to the net from other sources of belt resistance, adding belt tension through additions in the takeup tension can conceivably result in a net reduction in the energy cost or even the maximum tension in the belt. The same benefit can be found by considering reducing idler spacing and thereby ΔT_{mz}. In this case the net cost of additional but smaller idlers will enter the optimization balance.

Overall Efficiency

The optimization process requires comparing alternate designs for a range of variables. Overall comparisons are necessary to compare and optimize but they are often difficult to obtain due to varying commercial impacts. Therefore, a basis for technical comparison of various alternate designs all within the requirements of a particular project specification or among various conveyors or projects may be useful. While power or belt rating are relevant, Transport Friction, f_e, is preferred allowing more stable comparison among various conveyors. Use caution when making these comparisons since varying design parameters, ranging from the basics of capacity, lift and distance to subtleties of gear efficiency, seals and belt cover thickness, can alter the basis for comparison. Nonetheless, the following indices for the Main Resistances, as detailed above, can be used effectively if kept in perspective.

DIN f

A popular design method used in various parts of the world and referenced in various international standards including the International Standards Organization (ref. ISO 5048:1989) and Deutsches Institut für Normung (ref DIN 22101) is used for design as well as for reference comparisons. This "artificial friction factor" per ISO 5048:1989 is the change in belt tension per unit length divided by the combined weight of bulk material, belt and idler roll, again per unit length. When used as a tool for comparison, the total of the Main Resistances, that is, the sum of all ΔT_e's less the lift and point sources contributions, would be divided by the total moving weight including the live material weight, the belt around it's full path and idlers on both the carry and return sides. Though the various contributions to tension increase do not vary consistently with any or all of these weight contributions, this factor can effectively serve as a comparison tool especially when international standards are referenced in the specification.

Transport Efficiency, f_e

A more consistent and preferred parameter for comparison is to divide the total of the ΔT_e's less the point source and lift tensions divided by the conveying length, L, and W_m. Like the DIN f or Effective f, f_e is dimensionless but is preferred since it provides a more relevant and balanced comparison considering that belt weight and idler weights are design decisions rather than major tension influences. Both of these measurement indices will vary with changing belt and component design duty decisions due to the effect on subcomponents such as belt cover thickness, idler series and seal design, pulley weight. Nonetheless, f_e will change less since the weight of these components is not part of the calculation. As described in this

CMA-CEMA Proprietary (This document (1400) is NOT ... 2017 to Pabitra Das Chitrakool, Bangkok, , Thailand)

paragraph f_e is explained as a simple way to compare conveyor design choices. The case where the belt is empty will result in an answer of infinity if the following definition of f_e is used but is not applicable because no material is being transported:

$$f_e = \frac{\sum_{n} \Delta T_{nmain}}{L \times W_m} \text{ (dimensionless)}$$

Equation 6.144
f_e, Transport Efficiency

www.CEMATT.com has licensed this document (4604) on 23/2/2011 to Natarapom Chitrakool, Suanluang, , Thailand

System Interactions

The belt interconnects the various components of a conveyor and therefore is critical to the way components work together.

Component Location

The location of primary components has a major effect on the required belt rating and stretch, or travel seen by a takeup, under steady running conditions and, often just as important, on the transient tensions that could develop without appropriate control. The location of tension controlling components often depends on issues of simplicity, clean side wrap, accessibility and cost. Judicious location of key tensioning components can have a significant benefit to belt life, takeup requirements and transient tensions as well as total invested cost. The following discusses general interactions that come into play but their importance varies widely and specific tension effects must be analyzed in detail for safe and optimum performance. Transient speed issues are elaborated on later in this section as well.

Active Pulleys

The general goal with conveyor design is to minimize the peak tension and total stretch. Peak tension will be located at the active pulleys since these provide corrective tension changes to those accumulating due to motion friction and gravity forces. Since belt stretch is the product of length, tension and modulus, less total stretch will be seen the closer the active pulley is to the flights with the primary conveying tension contribution. Key locations to consider are near the end of a long incline or high friction section or where the belt enters a long, net power producing decline flight.

Single pulley drives are the simplest and most common for shorter belts. The best locations for simple incline or horizontal belts are at or near the head while tail drive is good practice for overall regenerative decline conveyors.

Multiple Pulley Drives

A multiple-pulley drive uses two or more separate motors, one or more driving the primary drive pulley and one or more driving secondary drive pulleys. The primary drive is defined as the one to contact the belt first from the primary load resistance since it commonly has the higher tension. They are used for a number of reasons, including:

- Reduction in T_{min} required
- Space and component size
- Commercial and maintenance benefits from multiple standardized components

The first of these results primarily from the use of a smaller ΔT_e and is usually the most important. With multiple pulley drives, each of the pulleys in the drive is looked at independently with its own wrap, θ_n, friction factor, f_n, and T_{min}. When each drive is supplied with a known torque relative to each other, the tensions can be added without additional concern. For other drives, this is not so straightforward. When torque is not actively controlled or is not an independent characteristic of a prime mover, a multiple pulley drive should be designed considering the interaction of the drive characteristics and the various components in the system. Drive coordination and control is an important element of multiple pulley drives. In particular, when T_{min} for pulley n is supplied by another drive pulley n'>n, then pulley n' must be started marginally sooner and both accelerated at rates appropriate to T_{min} needed by drive pulley n.

Breaking the total drive requirement into smaller multiples also allows benefits from judicious locations acknowledging penalties to installation and control simplicity. The use and location of multiple spaced drives likewise influences the tension levels and stretch so that less friction and gravity tension accumulates before it is adjusted to a lower magnitude by an active pulley. Indeed, continuous active tension compensating for natural tension additions, if practical, might be considered ideal. The optimum use of multiple drives occurs when the tension entering the various drive locations are equal.

Though drive spacing can have benefits by reducing peak tension, only several locations are ultimately available or beneficial. These are at the head, the tail and spaced along the carry section as booster drives. For the longest conveyors, multiple drive systems will often include a combination of clustered drives acting substantially as one at one end of the conveyor as well as additional drives at the other end and/or spaced along the carry side of the conveyor.

Clustered Drives

If properly designed the multiple pulley configuration is often considered as a single drive since they are close to one another and can be considered to act as one. In this case, the tensions exterior to a multiple-pulley drive are used the same as those for a single-pulley drive. Pulleys are still identified independently, however.

The C_w values provided for calculation of minimum tension also show the benefit of a longer wrap for reducing the T_2 required in a drive. This effect is extended with the longer effective arc from a pair or series of drive pulleys. In addition, the lowest tension pulley in the drive can be equipped with less power than its proportional share so that it requires even less T_{min}. The T_1 of this pulley acts as it's neighbors T_2 and, when properly sized, is sufficient for the higher power remaining for the other drive pulleys and can result in a significant reduction of T_{min} for the entire drive so that the maximum belt tension is also less.

WWW.CEMANET.ORG has issued an Enterprise License (1460) on Mar 24, 2017 to Laboratorio CEMA (Universidad de Santiago), , mailto:

Single-pulley Drive Arrangements

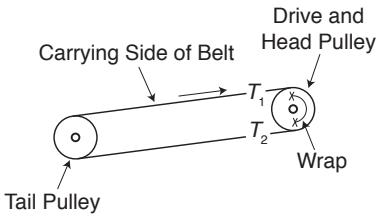

Single-pulley drive at head end of conveyor without snub pulley.

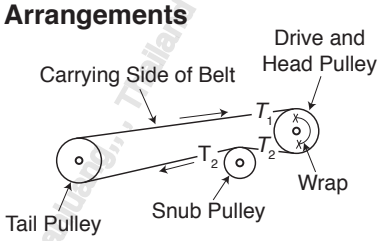

Single-pulley drive at head end of conveyor with snub pulley.

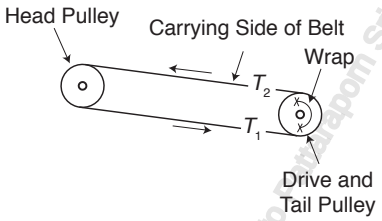

Single-pulley drive at tail end without snub pulley. Used when head end drive cannot be applied.

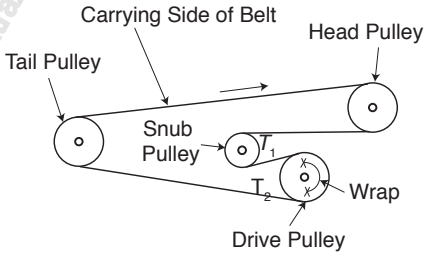

Single-pulley drive on return run.

Dual-pulley Drive Arrangements

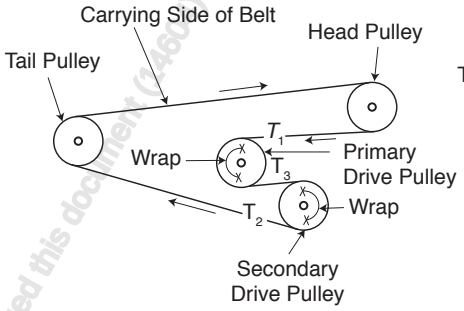

Dual-pulley drive on return run.

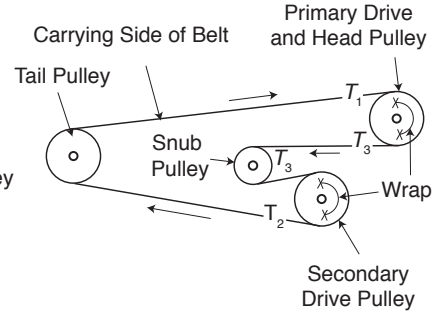

Dual-pulley with primary drive on head pulley of conveyor.

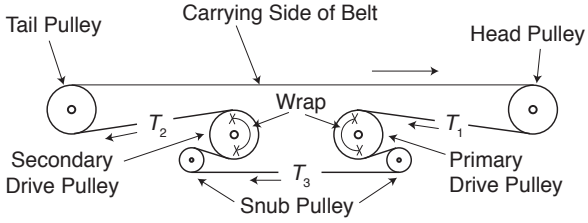

Dual-pulley underground drive on return run.

WWW.CEMANET.ORG has issued this document (614650) on Apr 2017 to Thanapon Sritrakool, Customer, Thailand

Figure 6.145
Various drive pulley layouts

Figure 6.145 shows several common configurations of multiple pulley drives. For any conveyor drive that utilizes more than one drive pulley, a snub pulley arrangement is preferable, so that both pulleys drive on the same clean side of the belt.

Of particular note is the case when the primary drive utilizes the clean side of the belt while the secondary drive is permitted to operate on the carrying or dirty side of the belt. In this case, the friction coefficient for the secondary pulley may be less so the tension relationship should be investigated. In all cases effective belt cleaning is important for keeping snub pulleys clean and reducing mis-tracking but belt cleaning becomes critical when a driven pulley contacts the dirty side of the belt.

Note:
Crowned pulleys should not be located close to one another.

Booster Drives

Theoretically, the best drive would continuously add energy along the belt path as it is being removed through movement resistance and potential energy. There are many practical limitations to this ultimate drive but the concept of removing tension by adding energy progressively along the carrying run of the belt has been developed using booster drives with benefits of reduction in belt strength requirement.

Booster drives are effectively fixed trippers with pulleys equipped with drive motors distributed along the length of a long conveyor. The height is kept small and the discharge is in-line to minimize energy and material control concerns when discharging material. Booster drives can be located periodically on the carrying run to reduce significantly the required belt rating. Most commonly, these are a pair of pulleys each with something more than 180 degrees of wrap that discharge and immediately receive again the material. See Figure 6.146. Well conceived control strategies for transient load and speed conditions are essential for these designs due to the spacing and time delays inherent with the distance between them.

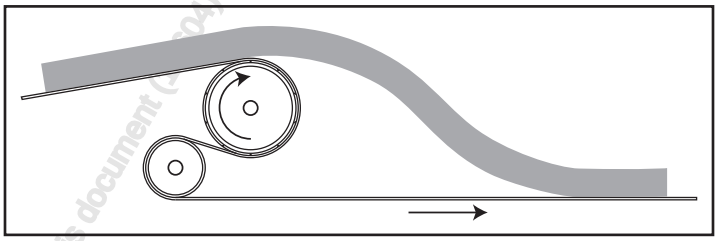

Figure 6.146
Schematic of intermediate booster drive on carry side of conveyor

Tail Drives

The drive may be located at the tail as the only drive or as part of a multiple drive discussed as a spaced multiple drive.

For the same reason that head drives are preferred for inclined conveyors, tail drives should be considered for downhill or net decline conveyors. The decision is less clear since the potential energy from the decline is offset by the friction or energy loss of movement. The particular incline and friction, either considered as the possible range or preferably with known belt and idler resistance, will determine if there is a clear advantage for the tail or head location.

A single tail drive may be used for space, maintenance or structural reasons. In these cases, the automatic takeup must be between the drive and the primary load and must be sized appropriately so that the tension at the loading point does not drop below minimum tension requirements. Clearly, this adds to the peak belt tension and therefore belt rating and cost.

www.CEMA.ORG has issued this document (Ver. 2004) on Apr 24, 2017 to Chatchai Sritrakool, Suan Sunandha Thailand

For long conveyors where maintaining a minimum tension to limit sag percentage is not a concern, adding a tail drive pulley to other drives at the head allows reduction of T_{min} by making up the return strand resistance so that it does not have to be pulled from the head drive. Combined head and tail drives result in lower required belt rating and better control flexibility for long complicated overland conveyors. Coordination of startup and shutdown is necessary for the benefits of load sharing to be realized, especially during dynamic conditions.

Takeup Location

Locating an automatic takeup at the point of minimum tension will often provide the lowest average belt tension and the least amount of takeup load and therefore belt stretch. However, geometry and space considerations often override these benefits and control the takeup location.

The takeup is almost universally located on the return strand of the belt, often near the tail or head. The primary considerations for takeup location are the additional tensions that develop on the return belt from idler and belt friction and those from the net potential energy difference for the belt weight due to elevations of the head and tail. For example, on a simple incline belt with a head drive, T_{min} at the drive will be T_{tu} from a tail takeup plus a portion of the belt weight but lessened by the friction of the return belt. Conversely, the T_{tu} tensions from a head takeup will be increased at the tail from return belt friction but decreased due to belt weight by the time they are seen at the loading point and need to control belt sag. The relative magnitudes of the minimum tension required of the drive pulley versus the minimum tension needed for sag considerations will direct the decision for a takeup location between the tail and the head with other considerations being equal. Similar evaluations come into play with more complicated conveyor layouts and can have a significant effect on required belt rating.

The takeup location relative to the drive affects the time delay for the automatic takeup to react to changes in tension at the drive and therefore influences component and control selection and design. For these reasons, the preferred takeup location is often next to the primary drive. Cost savings from reduced belt requirements often justify expenditures for special controls or to locate the takeup less conveniently. When the takeup must be installed remote of the drive, with spaced drives, or when the takeup movement is not instantaneous, startup and stopping control speeds must be matched with the response time including the delay time for belt tension effects to be translated between the takeup and drive(s). Some over sizing of the takeup can compensate for a slow response.

Belt Stretch Influences

Though the mass of the belt enters inertia calculations in a straightforward way, the belt's other primary characteristic of modulus affects the conveyor operation in varying and sometimes surprising ways. In general and with proper control, belt stretch should be minimized to arrive at a design with the lowest average belt tension in order to limit the possible range of movement for various components and to reduce the potential energy stored in the belt. When low stretch is obtained from high belt modulus, special care is needed to control transient behavior.

Local Belt Stretch

A subtle concept that should be understood when considering the interaction of adjacent components is the belt strain and therefore belt speed variation that is seen with changing tensions. That is, the belt should be considered as having an average speed but that this speed varies slightly around the conveyor. This effect is most important where tension is changing quickly as on the contact length of an active pulley or among adjacent active pulleys, especially with low modulus belts. Adjacent multiple drive pulleys rotate at slightly differing speeds which depend on their relative tensions. The variation is strongly affected by the modulus as well as the tension difference and can be an issue when drive speed is governed by rate rather than torque as is the case with synchronous drives. Historically, dual drive pulleys geared together have justified the use of different diameters to address this problem. The relative slip or speed

www.CEMAT.org (registered to document (4400) on April 6, 2021 to Rattanasak Sukkod, Nonthaburi, , Thailand)

differential between drives can be estimated by comparing their average tension in PIW (kN/mm) at each drive divided by the belt modulus plus one. The variation among drives is often small but can cause belt slip depending on the drive characteristics. Belt slip in drives should be avoided whenever possible as it increases belt bottom cover and lagging wear and contributes to mis-tracking.

Fixed Takeup - Constant Length Belt

Predicting the tension around the belt circuit for a fixed or manual takeup is the subject of this section. When a fixed takeup is used in a conveyor, the belt can be thought of as having a fixed length which is the sum of its original nominal length and a total stretch (typically 2.0 times takeup pulley movement). Because with this style of takeups the belt length is fixed after tightening, the strain and therefore the tension at the takeup pulley varies as running and active pulley tensions change. The following also describes the effect of a moving takeup that is disabled for various reasons. It should be recognized that the original length as discussed here is a fictitious length and is different from the installed length due to permanent stretch and modulus non-linearity. Nonetheless, the linear effects from a constant modulus near the operating tension can be used to predict tension changes in the belt circuit with changing loads.

An additional complication develops when analyzing fixed takeups since the precise installed length and tension is difficult to know. Consequently, the actual tension is usually estimated from observing drive success. The operating assumption is that if the drive slips then the takeup is adjusted as needed to prevent slip. Acknowledging the inaccuracy of this method, the conveyor and components should be designed to include the possibility of actual tension to be ±40% of intended design tension. That is, worst case tension for design/selection of the belt and pulleys at the takeup is $1.40 \times T_{tu}$, the tension that is needed for steady state operation. Similarly, the belt may seem to operate satisfactorily under lower steady state tension but experience unobserved and undesirable tensions for sudden transient events. Alternately, a risk analysis considering the consequences of operating failures versus the cost of tension measuring equipment should be made.

A fixed takeup moves to stretch the belt to apply the required minimum tension calculated above and then remains stationary unless readjusted. With a steady state running conveyor, relatively uniform tension changes occur around the belt circuit. Likewise, when the tension distribution changes in the conveyor due to varying load, for instance, the local stretch or strain in the belt is altered and redistributed around the conveyor circuit. For example, if the active drive contribution ΔT_e becomes less negative (drops in magnitude), less stretch occurs at the drive so that this stretch has to be absorbed throughout the belt circuit with consequent higher tensions, that is, the tension at the takeup is higher when the tension at the drive is lower.

To generalize, the average strain (stretch divided by original length) and therefore average tension stays constant with constant total stretch and belt length. The average tension under stationary conditions for an estimated initial belt stretch is the basis of predicting the affect of tensions that develop when the conveyor moves. The design process uses a correction from this in the circuit tension iteration process discussed as Tension Management since the actual tension at any point is not known directly, as with automatic takeups, but must be inferred. The average tension change ΔT_n in each flight is multiplied by the flight length and summed for the entire conveyor. The resulting takeup tension is arrived at by dividing by the total belt length and subtraction from the average tension. As before, the takeup tension is added to the tension change in each flight to arrive at the tensions around the belt circuit and iterations are needed to include the tension dependent friction effects and to correct the initial belt stretch or average takeup tension in order meet the minimum tension requirements around the belt path for sag and active pulley traction. For other operating conditions, the tension changes from load or speed changes are incorporated and the takeup tension again adjusted as needed to arrive at the original summation value.

Material Copyright (c) 2014 Martin Engineering Company, Neponset, Illinois

When the tensions under various operating conditions are calculated and incorporated into component sizing, the safety factor may be reduced to 1.1 or to 1.0 if tension measuring equipment is used to understand the actual pre-tension.

Automatic Takeup Response

As described regarding takeup location, any time delay or deadband between conveyor or drive tension changes and the automatic takeup reaction means that the instantaneous tensions develop similar to those of a fixed takeup. For example, as an operating conveyor empties the tensions drop and the belt contracts so that higher tensions are seen until the actively controlled takeup deadband is exceeded, the takeup retracts, and the tension change makes its way to the drive pulleys. Takeup control such as pre-tensioning for startup torque and preset operating ranges for empty and full conditions are often necessary to prevent problems with these designs. This can be accomplished with active takeups or with active restraint applied to gravity takeups.

Reversing Conveyor

Reversing Conveyors are another case where belt tensions are influenced by component location but with less flexibility for optimization. The maximum, or design, tension developed at various points on the belt circuit is determined fundamentally as described above for the range of possible loading and transient speed conditions with the added complexity of considering tension accumulation separately for each travel direction. Reversing designs often justify special component configurations for the least cost total design. In particular, reversing drives are discussed in Chapter 13. Possible design approaches include the following.

Reversing Conveyor Fixed Takeup

A common design for short conveyors uses an electrically reversing drive motor with a fixed takeup. The tension analyses proceeds as described for fixed takeups but higher design pre-stretch will often be necessary since the drive may not be located relative to the major loading optimally for both directions.

Reversing Conveyor Automatic Takeup

The constant tension benefits of automatic takeups for longer conveyors are also seen with reversing belt directions. The drive and takeup may not be located optimum for both directions so that the drive must pull through the return side of the belt with likely higher belt and component design tensions and longer takeup travel. The resulting tension diagrams are shown in Figure 6.147.

WWW.CEMANET.ORG has issued this document to Mr. Putrapom Smitadol on Apr 24 2014 (Putrapom Smitadol, Bangkok, Thailand)

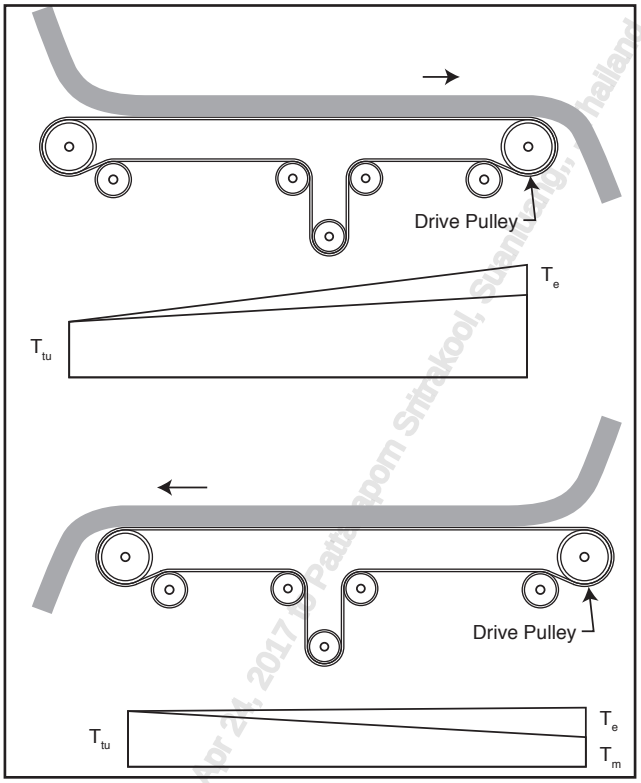

Figure 6.147
Takeup tension for reversing conveyor

Reversing Conveyor Dual Drive

The problems from various incline and decline complications often justify applying tension control differently for each direction of travel. Separate active reversing drives are commonly used to minimize total belt stretch and component loads. In this case, each drive is the primary propulsion for each direction and the other freewheels or reverses at a lower power level. The purpose is to allow the automatic takeup to be located on the opposite side of the drive from the primary load in both directions with a net lower takeup tension required for the conveyor. Some conveyor geometries lead to significant benefits for different optimum takeup locations for each direction as well. In this case, dual automatic takeups may be designed but, they must be actively controlled so that only one is effective at a time. The control must also prevent takeup pulley travel migration outside of its effective range.

Transient Behaviors

Transient tensions imply dynamic or changing tensions. The rate of change has a major effect on the consequences of transient tension. In particular, the potential energy stored as belt stretch or takeup weight elevation at a particular point on the conveyor has the potential to move quickly and be seen as tension change at a different point on the conveyor when the force balance in the belt changes. These changes can continue to propagate around the conveyor until dampened out. They can also interact with the takeup mass and cause it to oscillate. In other cases positive and negative tension waves can propagate in either direction until they meet and double up at a point at the opposite end of the conveyor. Whereas active increases in ΔT_e are more likely to be a self limiting action, sudden loss of ΔT_e is a common concern because it is a major, fast acting change that can occur from simply cutting or losing power to a drive especially during a start (aborted start) when the drive torque can be well above running torque.

Pattarapom Sritrakool, Stanteng, Thailand

Particular transient operating conditions that should be avoided include:

- Direct-on-line starting of overpowered motors
- Overpowered drives with high locked rotor or starting torque and a low full speed torque
- Aborted starting with conveyors of short startup time
- Aborted startup of overloaded belt
- Emergency braking of high tonnage/high lift conveyors
- Severe braking on belts with downhill loading
- Overloading on downhill portions of downhill conveyors
- Short stopping times (drift time less than 5 seconds)
- For starting or stopping time use a rule of start up time of 45 seconds/mile (28 s/km) of conveyor

High sag can magnify problems from any condition on this list. In addition, high frequency of smaller occurrences of transient conditions also causes accumulative damage and should be avoided.

Tension change from speed and load increases and decreases cause a wide range of possible system consequences. They can be guarded against in the design or diagnosed and eliminated by proper understanding and corrective action including Dynamic Analysis, if necessary.

High Dynamic Tensions

When energy must be discharged from a conveyor system, the belt redistributes the forces to damping or loss locations at the tension wave speed of the belt. If done suddenly, the result can be high speed changes to high inertia components with potentially very high belt forces. These extreme dynamic tensions can be damaging to the belt, especially its splice, and to pulleys, drive components as well as idlers from vertical inertial forces that develop as sag is suddenly reduced. They are best treated by minimizing the possibility of occurrence through design modeling, by thorough conveyor control and by addressing the mass of the drive and it's capability for deceleration.

Festooning from Low Tensions

Without proper consideration of the starting and stopping forces, it is possible that belt tensions may drop to zero and the belt will experience extremely high sag or festoon in a buckling action between idlers at some point on the carry or return side of the belt. For example, a belt with a decline from the tail end, and an incline at the head, may be loaded at the tail end only. If braking is applied at the head pulley, the belt may have zero tension or even some slack on the carrying side. The potential result is load spillage, entanglement, loss of alignment, and impact or impulse forces that redevelop in the conveyor system as the "slack" is reabsorbed.

Effect on Material Carried

In certain instances, the rate of starting and stopping may exert influences on the material which result in intolerable conditions. Certain materials can be accelerated or decelerated more effectively by the belt than others. For example, if a declined belt conveyor handling pelletized iron ore is stopped too rapidly the material may start to roll on the belt surface and result in a pile-up at the discharge point. Similarly, starting an inclined belt too rapidly may cause the material to roll backward. Especially in combination with high sag, tension pulses can cause the material to be thrown from the conveyor.

www.CEMA.org has issued this document 14049 on Apr 4, 2017 to Pattapon Sirikod Suduang, , Thailand

Belt Stretch Potential Energy

The potential energy that is stored in belt stretch can be a significant portion of the total energy stored in a tensioned, moving belt especially for slow, high lift, fabric belt applications. Much of this stored energy is due to the takeup tension in each strand of the belt. The tension balance is re-supplied to the conveyor by the takeup movement and material lift during stopping. In these cases the energy need to lift the material during run on conditions is dominant so that this effect is actually beneficial to a more gradual stopping time.

Stored Potential Energy from several sources can be contained easily in the conveyor system and is usually not a critical element of design. However, during operations or maintenance, this energy can be released by blockage removal, catastrophic belt, pulley or structural failure. The magnitude of stored energy may significant and should be respected and mitigated for the damage to equipment and safety hazards to humans.

Drive or Brake Slip

During both acceleration and deceleration the distinct possibility exists of losing the required T_e or T_1/T_2 ratio necessary to maintain the required traction between the belt and active pulley. This particularly is true if the takeup is located far from the drive. If a screw takeup is used and improperly adjusted or the travel of a gravity takeup is too limited, the necessary ratio T_1/T_2 may be lost during the attempt to accelerate the belt conveyor. During deceleration, the effect of the inertia load may cause a loss of the T_1/T_2 ratio necessary to transmit braking forces from the braking pulley to the belt. This would permit the continued motion of the belt and load, after the pulley had been stopped.

Unexpected Failures

The nature of many of the effects of transient tension is that they cannot be explained by the conventional calculations of this book. Because of speed and infrequency, they are also difficult to observe. Nonetheless, there is an explanation not necessarily associated with poor component design or manufacture. Common problems on existing conveyors often identified by dynamic analysis:

- Premature belt splice failures
- Belt breaks other than at splices
- Repetitive pulley failures
- Excessive takeup travel
- Takeup component failures (ropes, sheaves, etc)
- Drive or brake slip
- Concave vertical curve liftoff during starting or stopping
- Brake failures
- Material thrown from the belt

Belt Flap

Belt flap is a dynamic vibration in the carry or return belt that is usually initiated by idler run out but is magnified because the geometry, loading and speed are near a critical combination defining the natural frequency of this movement. In some cases, especially in flat return belts, this behavior can be predicted accurately as a vibrating string. In general, the problem is more complicated than that but can be estimated using this equation:

www.BLOCKET.COM Restricted Use Document (2014) on Apr 02, 2014 by Prapapom Sritrakool, Chulalongkorn University, Thailand

$$S_{icn} = \frac{1}{32} \times m_m^2 \times \pi^2 \times D_r^2 \times \frac{g}{\left(V^2 \times \frac{\Delta y_s}{100}\right)}$$

Equation 6.148
S_{ic}, Critical idler spacing sensitive to belt flap

Where:

m_m	= 1 or 2 (check both cases)
D_r	= Idler roll diameter in flight "n"
V	= Belt velocity
Δy_{sn}	= Belt sag as percentage of idler spacing between idlers for flight "n"

D_r = 6.0 in T_{13} = 11,185 lbf S_{ir13} = 10.0 ft $W_b = 23.2 \frac{lbf}{ft}$ Return $\therefore W_m = 0$

$$\Delta y_{s13} = \frac{S_{ir13} \times (W_b + W_m)}{8 \times T_{13}} \times 100 = \frac{10.0 \text{ ft} \times 26.3 \frac{lbf}{ft}}{8 \times 11{,}185 \text{ lbf}} \times 100 = 0.294$$

$$S_{icn} = \frac{1}{32} \times m_m^2 \times \pi^2 \times D_r^2 \times \frac{g}{\left(V^2 \times \frac{\Delta y_s}{100}\right)}$$

Check $m_m = 1$

$$S_{ic13} = \frac{1}{32} \times 1 \times 9.87 \times \left(\frac{6 \text{ in}}{12 \frac{in}{ft}}\right)^2 \times \frac{32.2 \frac{ft}{s^2}}{\left(600 \frac{ft}{min} \times \frac{1 \text{ min}}{60 \text{ s}}\right)^2 \times \frac{0.294}{100}} = 0.077 \text{ ft}^2 \times \frac{32.2 \frac{ft}{s^2}}{100 \frac{ft^2}{s^2} \times \frac{0.294}{100}} = 8.5 \text{ ft} \quad \frac{S_{ir13}}{S_{ic13}} \times 100 = \frac{10 \text{ ft}}{8.4 \text{ ft}} \times 100 = 119\%$$

Check $m_m = 2$

$$S_{ic13} = 0.308 \text{ ft}^2 \times \frac{32.2 \frac{ft}{s^2}}{100 \frac{ft^2}{s^2} \times \frac{0.294}{100}} = 33.7 \text{ ft} \quad \frac{S_{ir13}}{S_{ic13}} \times 100 = \frac{10 \text{ ft}}{37.7 \text{ ft}} \times 100 = 26\%$$

Note: With m =1 the return idler spacing is within 20% of S_{ir13} and therefore over the recommended limit

Figure 6.149
Example S_{ic13} belt flap critical idler spacing calculation

The idlers should not be spaced within 20% of S_{ic}. If this is difficult or impossible, improvement may be seen with irregular idler spacing or with very good idler run out [TIR < .010 in (0.25 mm)].

When is Dynamic Analysis Required?

Since dynamic analysis as described above is still a complex mathematical process, it is not used nor required on all belt conveyors. The question that was asked in the first edition of this book in the 1960's must still be asked; "To what degree of accuracy will the computations have to be carried out?"

The difference is in the 1960's only a few academics were addressing dynamic issues and the cost of access was prohibitive for the practicing engineer if available at all. Today, there are advanced dynamic analysis programs used by many companies and any conveyor can be a candidate for dynamic review. However, there still is a cost associated with advanced simulation and therefore the question of when this analysis is required is still asked. The answer is still difficult to answer and often still based on the cost of the equipment and significance of the conveyor to the mine or plant. The higher the equipment cost and the more important the conveyor, the more likely the added insurance of up-front analysis is spent.

www.BELAIR.ORG has licensed this document (1440) on Apr 24, 2017 to Patrizia Pom Shtakool, Stanluang , The Ohio

In an attempt to provide some better, more concrete guidelines, consider the following common problems on existing conveyors often identified by dynamic analysis:

- Premature belt splice failures
- Belt breaks other than at splices
- Repetitive pulley failures
- Excessive takeup travel
- Takeup component failures (ropes, sheaves, etc)
- Drive slip
- Concave vertical curve liftoff during starting or stopping
- Brake failures
- In adequate power for starting
- Excessive belt drift in horizontal curves

New applications requiring dynamic analysis to insure proper design:

- Flight lengths greater than 1 mile (1.6 km)
- Multiple drive or brake locations (head-tail or intermediate)
- High lift conveyors with takeup near the discharge (high) end
- Highly regenerative conveyors with large brakes
- Horizontal curves

New applications probably benefiting from dynamic analysis:

- High capacity conveyors (greater than 8,000 tph (7,250 mtph))
- High speed conveyors (greater than 1,000 fpm (5.0 m/s))
- Winch takeup or takeup brakes that could react differently under stopping or starting conditions, especially under a power loss scenario

DESIGN TOOLS

This chapter provides many calculations for use in predicting the tensions in a conveyor belt as well as other tension related indices. These have been developed in a determinative, closed form fashion for clear analysis of a wide range of conveyor layouts and operating behaviors. Their application is not trivial and requires computer analysis to handle the computations and range of operating conditions. Visualizing the tensions over the full conveyor path is another area where computers make complex belt conveyor systems more manageable.

Iterative Process

The tension analysis process is discussed as a topic of Tension Management. The scope of iterations or recalculation cycles with progressive corrections for tension dependent energy losses, active tension contributions and takeup tensions demonstrate the amount of adjustments and calculations involved in the design of any but the simplest conveyors. The effect of operating under various environmental, loading and transient tension conditions accumulate to a design suitable for long term and stable conveyor life. In addition, other higher level iterations may be needed to assure that the various table values provided in this chapter are safe for tension loss as well as tension increasing belt paths.

www.conveyorknowledge.com Copyright (c) 2014 Conveyor Dynamics, Inc. Document (14604) on Apr 4 2017 to Rattanakom Sritrakool, Suanluang, , , Thailand

Software Attributes

A wide variety of information flow algorithms may be incorporated into design software with equivalent results. However, a variety of considerations differentiate the software options and desirable capabilities when selecting a conveyor design tool:

1. Overall man machine interface or information exchange method.
    a. Clear and simple conveyor path input parameters
    b. Graphical and numerical versions of input and output
        i. Loading
        ii. Tensions
        iii. Belt Path
        iv. Compliance with specifications
    c. Export conveyor data and analysis results to other software for further analysis
2. Easy execution of the Universal Method conveyor design equations of this chapter.
    a. Automatic execution of standard specifications
    b. Ability to override for various purposes
        i. Initial design and optimization
        ii. Evaluate suitability for alternate applications
        iii. Problem analysis
3. Incorporates tools for transient conditions.
    a. Varying loading conditions
        i. Initial loading
        ii. Unloading
        iii. Worst case conditions of gravity effects
            1. Inclines only
            2. Declines only
        iv. Active component characteristics
4. Able to be customized.
    a. Specific component characteristics
    b. Alternate tension algorithms
    c. Compatible with specialized analysis
        i. Dynamic analysis
        ii. Specialized paths-curves

WWW.CEMANET.ORG has issued this document (4404) on Apr 14, 201 to Pattaraporn Sritrakool, Suranaree, Thailand

EXAMPLE CONVEYOR ANALYSIS

For all but the most simple conveyors the design process is iterative. After basic sizing calculations provide a starting point, certain assumptions are made and then tested against the effects those decisions have on the capacity, belt tension and other components. The iterative process continues until an acceptable design results. Because of the nature of the iterative design process it is unlikely that two designers will come up with identical designs, although both designs could be considered correct. Providing a summary set of calculations for verification by the user is the primary purpose of this example. Suggested steps in the design analysis of this conveyor is also provided here as a summary of the Universal Method rationale.

The following Figure and Table provide the geometry of an example conveyor to illustrate the use of many of the methods described in this chapter. In addition, Table 6.11 and Figure 6.12, previously provided in this Chapter, are repeated here and outline the operating requirements and path of this conveyor.

Flight "n"	Description (2)	Flight Length "L_n" ft (m)	Cumulative Length ft (m)	Lift "H_n" ft (m)	Lift Angle "Θ_n" (deg)	Idler Spacing "S_{in}" ft (m)	Accessories
1	Loading (1)	15 (4.58)	15 (4.58)	0.0	0.0	2.0 (0.61)	15 ft of skirt seal per side
2	Carrying (2)	500 (152.5)	515 (157.1)	0.0	0.0	5.0 (1.53)	
3	Carrying (2)	500 (152.5)	1015 (309.6)	0.0	0.0	5.0 (1.53)	
4	Carrying (2)	500 (152.5)	1515 (462.1)	0.0	0.0	5.0 (1.53)	
5	Carrying (2)	250 (76.3)	1765 (538.3)	52.9 (16.1)	10.0	5.0 (1.53)	
6	Carrying (2)	250 (76.3)	2015 (614.6)	52.9 (16.1)	10.0	5.0 (1.53)	
7	Carrying (2)	250 (76.3)	2265 (690.8)	- 52.9 (-16.1)	-10.0	5.0 (1.53)	
8	Carrying (2)	250 (76.3)	2515 (767.1)	- 52.9 (-16.1)	-10.0	5.0 (1.53)	
9	Active Head Pulley						2 belt cleaners
10	Return	-250 (-76.3)		-52.9 (-16.1)	10.0	10.0 (3.05)	
11	Return	-250 (-76.3)		-52.9 (-16.1)	10.0	10.0 (3.05)	
12	Return	-250 (-76.3)		52.9 (16.1)	-10.0	10.0 (3.05)	
13	Return	-250 (-76.3)		52.9 (16.1)	-10.0	10.0 (3.05)	
14	Return	-500 (-152.5)		0.0	0.0	10.0 (3.05)	
15	Return	-500 (-152.5)		0.0	0.0	10.0 (3.05)	
16	Return	-500 (-152.5)		0.0	0.0	10.0 (3.05)	
17	Return	-15 (-4.58)		0.0	0.0	10.0 (3.05)	1 V-Plow
18	Bend Pulley						
19	Gravity Takeup Pulley						
20	Bend Pulley						
21	Tail Pulley						

(1) Load to be accelerated in flight n=1 is 2500 tph (2267.2 mtph)
(2) The conveyor is considered 100% loaded in all carrying flights

Table 6.11
Example conveyor flight data

www.CEMA.org Copyright Issued 01/01/2014 (1-800-671-3613) Patarapol Smitakol Customer Licensed

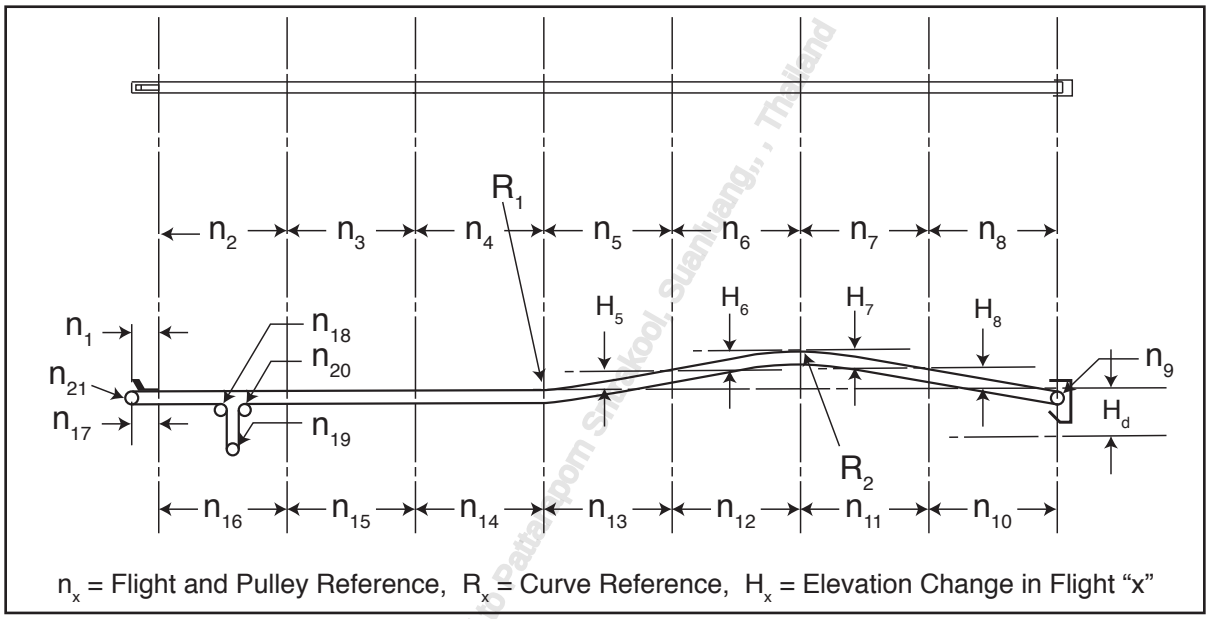

Figure 6.12
Universal Method example conveyor flight nomenclature

1. Operating Requirements

The conveyor must be capable of handling 2500 tph of the material located in a semi arid region of North America. Details affecting the conveyor design follow.

Variable	Value	Units	Note
Q	2,500 (2,267.5)	tph (mtph)	Design capacity of crushed rock aggregate
L	2,515 (767.1)	ft (m)	Overall path length with no net lift
γ_m	90.0 (1,441.6)	lbf/ft^3 (kgf/m^3)	Bulk density
T_F	15 to 100 (-3.8 to 37.8)	°F (°C)	Ambient temperature range
D_L	4.0 (101.6)	in (mm)	Maximum lump size of bulk material
	90	%	Fines content of bulk material
Φ_r	33	deg	Angle of repose
Φ_s	20	deg	Surcharge angle

Table 6.150
Operating requirements for example conveyor

The CEMA Material Classification code for this material is D36. The material is considered free flowing and material spillage concerns are moderate. Space allows a gravity takeup near the loading point and is chosen as the normally preferred type and location of takeup for this conveyor path. 35 degree troughing idlers are preferred.

WWW.CEMANET.ORG has issued this document (1469) on Dec 24, 2017 to Pattarapom Sirikool, Suanluang, , , Thailand

2. Basic Sizing

Belt Width

Per Chapter 4, the minimum belt width for this material should be 3 times the lump size or 12 inches (300 mm). Since the belt will occasionally see a full load of lumps, the preferred minimum is 5 times the lump size or 20 inches (500 mm).

Belt Speed and Width

Initially, without regard for capacity, Table 4.3 indicates that a heavy hard, sharp edged ore, coarse crushed stone material is typically conveyed at belt speeds of 400 to 1,200 fpm (2.0 to 6.1 m/s) for belt widths of 18 to 120 inches (450 to 3000 mm).

The required belt width is a straightforward calculation using the volumetric flow rate and cross sectional capacity. At 90 lbf/ft^3 (1442 kgf/m^3), 2,500 tph (2,267.5 mtph) equals 55,556 ft^3/h (1,573 m^3/h). Tables 4.41 to 4.48 can be used or the cross sectional area can be calculated for various belt widths with the surcharge angle and edge distance recommendations.

Though other combinations would work, a belt width of 48 inches (1219 mm) operating at 600 fpm (3.05 m/s) is selected for the initial design as a balance of wear life of the belt and load resistance. For this case, the edge distance and loading is calculated using equation 4.15.

$$A = \frac{Q}{V \times \gamma_m} = \frac{2500\frac{t}{h} \times 2000\frac{lbf}{t} \times \frac{1}{60}\frac{h}{min}}{600\frac{ft}{min} \times 90\frac{lbf}{ft^2}} = 1.543\ ft^2\ (0.143\ m^2)$$

Figure 6.151
Example calculation of cross sectional area, A, for Example Conveyor Analysis

Table 4.43 shows a capacity of A_s = 1.804 ft^2 (0.168 m^2) for a 48-inch (1219 mm) belt with 35 degree trough angle and 20 degree surcharge angle which is 1.543/1.804 × 100% = 86% of the theoretical capacity or a Design Factor, DF, of 1/0.86 = 1.16 . CEMA recommends a DF of > 1.0 so a 48-inch (1219 mm) belt is chosen for the initial design. Using the equations in Chapter 4, the belt edge clearance is almost 5.0 inches (127 mm) versus the minimum recommendation of 3.54 inches (88.95 mm).

Speed on Inclines

Since we must deal with 10° inclines, a check per Equations 3.7 and 3.8 are recommended with results as follows; Θ incline = 10°, σ_0 = 44 lbf/ft^2 (kgf/m^2), γ = 90 lbf/ft^3 (1442 kgf/m^3), Δy_s = 2%, $V_{slipmax}$ = 1,434 ft/min (7.3 m/s), $V_{spillmax}$ =1,556 ft/min (7.9 m/s). Note that these calculations use the maximum sag of 2% though the sag, and therefore the speed calculations, in the inclines may be less due to higher tensions. These limit speeds are greater than the design speed, V.

www.CEMANET.org Licensed Student Edition (4604) 8 Apr 24, 2017 Patarapon Sritrakool Suanluang, Thailand

3. Idler Selection Initial Estimate

Reference Chapter 5.

- W_m=138.9 lbf/ft (206.7 kgf/m)
- Estimate without the belt weight initially
- With 5.0 ft (1.53 m) spacing, idler load is 5.0 ft × 138.9 lbf/ft = 695 lbf (315.3 kgf)
- C5 troughing idlers selected with a nominal capacity of 900 lbf (408.6 kgf) selection per CEMA 502.
- Assume troughing idlers in the loading zone are spaced at 2.0 ft (0.6 m) to limit leakage.
- Assume C5 return idlers spacing =10.0 ft (3.0 m) until belt weight is known

4. Accessory Components

- The drive pulley is assumed to not be snubbed and to have rubber lagging.
- 15.0 ft (4.58 m) of skirting with seals spaced at 32 inches (813 mm) (2/3 of belt width)
- 1.23 inches (31.2 mm) deep material along skirting in loading chute
- Two belt cleaners
- One return belt plow (V-plow)

5. Initial Assumptions and Tension Calculations

- Universal method defaults including the default rubber for the small sample method are used.
- Takeup tension is arbitrarily set to 10,000 lbf (4,540 kgf)
- The drive pulley has no power for initial calculation purposes
- Fabric belt with W_b= 23.2 lbf/ft (34.5 kgf/m) and 1.125 inches (28.6 mm) thickness
- All pulleys are assumed to be 24 inch (610 mm) diameter with 6 inch (154 mm) bearing bores and weigh 1,184 lbf (537.5 kgf).
- Typical maximum flight lengths of 500 ft (152.5 m) in the carry and return side set for concise demonstration. Shorter flights will improve accuracy.
- Tension calculations begin with known tension at takeup
- Main Resistances are the primary calculation inputs provided in previous examples:
  a) Idler
  b) Idler Misalignment
  c) Indentation
  d) Trampling
- Additional losses are inputs provided in previous examples:
  a) Pulleys
  b) Return belt plow (V-Plow)
  c) Loading point
     i) Acceleration contribution
     ii) Skirt seal friction
     iii) Material sliding on skirtboard sides
  d) Belt cleaners
  e) Lift effect in the inclines and declined sections

The results of the above calculations for belt tension are summarized in Tables 6.152 and 6.153 as "Initial ΔT"

- These changes upset the tension balance so that the tension loop must be recalculated as described above.
- The iterations continue until the components and minimum tension requirements are satisfied.

www.CEMANET.ORG e-Learning Document 1482 (2017) Patarapol Sirirakool, Siamquarry, Thailand

6. Tension Management

Additional calculations are needed to distribute the belt tensions correctly and then for successful Steady State operation. Various cycles of recalculation of tension balancing iterations and operating conditions checks are then needed to arrive at a workable conveyor. They may be done in various sequences. One option is provided here.

- Tension is added at the drive pulley equal to the difference in tension on either side of the takeup pulley to balance the system. (28,528 lbf -10,106 lbf =18,422 lbf)
- The tensions on each flight are updated (due primarily to changes in trampling loss) and the drive pulley ΔT is again increased as needed. This is repeated until the tensions exiting and entering the takeup are sufficiently close.
- Check and update Belt Rating and weight. A heavier 6 ply 1200 PIW fabric belt at 26.3 lbf/ft and a modulus of 70,000 PIW meets the tension requirements.
- At this point, the vertical curves are checked for sufficient radii to prevent belt liftoff or overstress for various loading combinations of flat, inclined and declined.
- Pulley diameters must be updated to be compatible with the belt. This will also unbalance the belt tension calculation loop requiring additional iterations for the tension balance and changes to the drive ΔT.
- These changes upset the tension balance so that the tension loop must be recalculated as described above.
- The takeup weight will be twice the final tension at the takeup of 12,500 lbf (5,675 kgf) for a simple gravity takeup.
- The drive power requirements are calculated and motor power selected.

Minimum Tension Checks

- The ratio of T_2 to T_e must be > 0.5 for the drive pulley to have sufficient traction. The tension must be adjusted as needed to control sag to 2% Correcting for the above two limits is accomplished by increasing the takeup tension by the greater of the two and the tension loop and drive ΔT rebalanced.
- The drive power, belt selection, pulley design and sag and drive traction limits are updated as needed including the possibility of reducing the takeup tension.

Tables 6.152 and 6.153 show the tensions at the end of the final iteration described above. Component changes are defined in Equation 6.9.

Liftoff Speed Check

The maximum potential for material liftoff occurs at the lowest tension portion of the carrying side of the conveyor, flight 2. As shown in Figure 6.99, This is 93% of the operating speed of 600 fpm so some concern exists. While takeup tension could be added to increase T_{m2} to 9,000 lbf or the idler spacing reduced to 4 ft for this flight, no change is justified because the concern is very local and V_{c2} is within 10% of V.

7. Additional Optimization

Additional optimization may also be considered since full load, steady state operation will often govern the cost decisions. Possible capital and operating cost savings may be seen by considering:

- Different idler spacing
- Different belt speed
- Alternate belt width and construction

NOTICE: CEMA 550 has issued this document (April 24, 2017) to Pasquini Stefano, Tamasag., Taiwan)

- Takeup location
- Different Drive Configurations
- Multiple drive pulleys
- Snub pulleys

These should also be considered in conjunction with transient conditions considered next.

8. Transient Conditions

Design checks of transient belt speed and load conditions involve component rechecks and the design and evaluation of the drive control and brakes. The simple rigid body methods are useful, especially for initial considerations outlined below but the same checks should be made with the dynamic method. The total effective mass and the mass at other loading with the operating speed for the total Kinetic Energy provides useful approximations of various transient times and for component requirements.

Transient Speed Conditions

Passive Stopping-Drift

When the power is cut from the fully loaded running conveyor, the drift time, distance and material discharged is calculated to understand safety and operating consequences, including the required receiving chute capacity.

Startup

The startup time is established by torque available from the drive motors. Recognizing that T_{acc} is significantly higher than T_e, belt rating and T_{min} for the drive should be evaluated. Operating and motor life implications should also be considered.

Stopping

If we find the drift time of 18 seconds objectionable, a brake is needed to actively slow the loaded conveyor. The brake is sized by torque and thermal capacity.

Transient Load Design Checks

Though successful operation in a fully loaded steady state is assured, additional design checks are needed since the load will inevitably change. Three belt loading conditions are suggested for their potential to affect the component requirements.

Empty Case

The belt rating and power requirements are less for the empty condition than the loaded conditions so component changes are probably not necessary.

Only Declines Loaded Case

To safely analyze this operating condition, low resistance calculations should be used. These include;

- The high ambient operating condition of 100 °F (38 °C)
- Low levels of the various R_{rxx} values
- The result is a net power generation from the material potential energy, though a brake is a better solution due to the short time this event occurs.
- This resistance to movement must be provided by the drive pulleys by regeneration or braking.
- Because the drive pulley active tension direction changes, T_{min} switches to the approach side of the drive. Therefore, the T_2 of the drives must be transferred through the takeup requiring an increase in takeup weight, unless a tail brake is used.

www.CEMEET.or.th Restricted document (4604) 07/10/24, 2017 Pattarapom Sriprom Suphanburi, Thailand

In addition, the sag near the head pulley is now the controlling location and should be rechecked for the need to increase the takeup weight. This may also require pulley and belt shaft upgrades.

Declines Empty Case

Without the potential energy gain from the decline section higher tensions will be seen in the downstream section with likely implications;

- Motor requirements increase requiring a takeup weight increase and reconsideration of belt and pulleys. In this case, when the conveyor goes from unloaded to loaded, the motor needs to generate a maximum 562 hp, decreasing over 0.83 minutes down to 375 hp and the takeup will need to be increased to 16,000 lbf. It is likely that a 450 hp motor capable of this short term overload can be found and this should be specified rather than increase to a 600 hp motor.
- The combination of power and takeup weight increase causing the peak operating tension to increase. If this happens frequently the belt may need to be upgraded.
- The pulley shafts may need to be upgraded.
- With the net incline of this case, the need for a backstop or brake should be considered.
- The vertical curves may also be affected by the different tensions and should be rechecked.

A full dynamic analysis is recommended to verify the various components and specifications

WWW.CEMANET.ORG has issued this document (14604) on Apr 24, 2017 to Panitan Komarnrat, Siriteng, , Thailand

Initial Example Calculation and Final Iteration

Calculation Results For Initial Iteration				Calculation Results At The End Of The Steady State Calculations		
Flight Description	Average Tension at Takeup Pulley (T_{TU}) 10,000 lbf			Average Tension at Takeup Pulley (T_{TU}) 12,500 lbf		
	Flight	Tension gain in Flight, n (lbf)	Tension at end of Flight, n (lbf)	Flight	Tension gain in Flight, n (lbf)	Tension at end of Flight, n (lbf)
Takeup pulley	ΔT_{18}	106	10,106	ΔT_{18}	75	12,575
Takeup Bend Pulley	ΔT_{19}	97	10,203	ΔT_{19}	71	12,646
Return Belt under loading point	ΔT_{20}	8.3	10,211	ΔT_{20}	10	12,656
Tail Pulley	ΔT_{21}	110	10,321	ΔT_{21}	79	12,735
Load section	ΔT_{1}	348	10,669	$\Delta T1$	359	13,094
Flat Carry Flight	ΔT_{2}	3,197	13,866	ΔT_{2}	3,326	16,420
Flat Carry Flight	ΔT_{3}	3,142	17,008	ΔT_{3}	3,284	19,704
Flat Carry Flight	ΔT_{4}	3,081	20,089	ΔT_{4}	3,253	22,957
Inclined Carry Flight	ΔT_{5}	8,660	28,749	ΔT_{5}	8,886	31,843
Inclined Carry Flight	ΔT_{6}	8,635	37,384	ΔT_{6}	8,864	40,707
Declined Carry Flight	ΔT_{7}	-5,659	31,725	ΔT_{7}	-5,704	35,003
Declined Carry Flight	ΔT_{8}	-5,652	26,073	ΔT_{8}	-5,691	29,312
Head Pulley	ΔT_{9}	736	26,809	ΔT_{9} Drive T_{e}	-18,798	10,514
Inclined Return Flight	ΔT_{10}	1,161	27,970	ΔT_{10}	1,327	11,841
Inclined Return Flight	ΔT_{11}	1,161	29,131	ΔT_{11}	1,328	13,169
Declined Return Flight	ΔT_{12}	-8,84	28,247	ΔT_{12}	-992	12,177
Declined Return Flight	ΔT_{13}	-8,84	27,363	ΔT_{13}	-992	11,185
Flat Return Flight	ΔT_{14}	277	27,640	ΔT_{14}	335	11,520
Flat Return Flight	ΔT_{15}	277	27,917	ΔT_{15}	335	11,855
Flat Return Flight	ΔT_{16}	373	28,290	ΔT_{16}	575	12,430
Takeup Bend Pulley	ΔT_{17}	238	28,528	ΔT_{17}	70	12,500
Tension required of the Head Drive in the next iteration (T_{17} - T_{TU}) 18,528 lbf						
	Calculation Notes			Calculation Notes		
	Initial calculations show an additional belt cleaner and pulley resistance of 700 lbf for completeness.			Steady state tensions do not include belt cleaner or drive pulley resistances which are assumed to be driven directly by the motor.		
	Trampling calculation uses tension at beginning of Flight			Trampling loss uses average of tension entering and tension leaving the Flight		
	Pulley drag calculated with tension entering the Flight			Pulley Drag uses average of tension entering and tension leaving the Flight		

WWW.CEMANET.ORG has licensed this document (4/2/08) on Apr 24, 2008 to Rajaram Sharma, Bangkok, Thailand.

Table 6.152
Initial and final example Imperial results

Calculation Results For Initial Iteration				Calculation Results At The End Of The Steady State Calculations		
Flight Description	Average Tension at Takeup Pulley, (T_{TU}) 4,540 kgf			Average Tension at Takeup Pulley, (T_{TU}) 5675 kgf		
	Flight	Tension gain in flight, n (kgf)	Tension at end of flight, n (kgf)	Flight	Tension gain in flight, n (kgf)	Tension at end of flight, n (kgf)
Takeup Pulley	ΔT_{18}	48.1	4,588.1	ΔT_{18}	34.1	5,709.1
Takeup Bend Pulley	ΔT_{19}	44.0	4,632.2	ΔT_{19}	32.2	5,741.3
Return Belt under loading point	ΔT_{20}	3.8	4,635.9	ΔT_{20}	4.5	5,745.8
Tail Pulley	ΔT_{21}	49.9	4,685.9	ΔT_{21}	35.9	5,781.7
Load section	ΔT_{1}	158.0	4,843.9	$\Delta T1$	163.0	5,944.7
Flat Carry Flight	ΔT_{2}	1451.4	6,295.3	ΔT_{2}	1,510.0	7,454.7
Flat Carry Flight	ΔT_{3}	1426.5	7,721.8	ΔT_{3}	1,490.9	8,945.6
Flat Carry Flight	ΔT_{4}	1398.8	9,120.5	ΔT_{4}	1,476.9	10,422.5
Inclined Carry Flight	ΔT_{5}	3931.6	13,052.2	ΔT_{5}	4,034.2	14,456.7
Inclined Carry Flight	ΔT_{6}	3920.3	16,972.5	ΔT_{6}	4,024.3	18,481.0
Declined Carry Flight	ΔT_{7}	-2569.2	14,403.3	ΔT_{7}	-2,589.6	15,891.4
Declined Carry Flight	ΔT_{8}	-2566.0	11,837.3	ΔT_{8}	-2,583.7	13,307.6
Head Pulley	ΔT_{9}	334.1	12,171.4	ΔT_{9} Drive T_{e}	-8,534.3	4,773.4
Inclined Return flight	ΔT_{10}	527.1	12,698.5	ΔT_{10}	602.5	5,375.8
Inclined Return flight	ΔT_{11}	527.1	13,225.6	ΔT_{11}	602.9	5,978.7
Declined Return flight	ΔT_{12}	-401.3	12,824.3	ΔT_{12}	-450.4	5,528.4
Declined Return flight	ΔT_{13}	-401.3	12,422.9	ΔT_{13}	-450.4	5,078.0
Flat Return Flight	ΔT_{14}	125.8	12,548.7	ΔT_{14}	152.1	5,230.1
Flat Return Flight	ΔT_{15}	125.8	12,674.5	ΔT_{15}	152.1	5,382.2
Flat Return Flight	ΔT_{16}	169.3	12,843.8	ΔT_{16}	261.1	5,643.2
Takeup Bend Pulley	ΔT_{17}	108.1	12,951.8	ΔT_{17}	31.8	5,675.0
Tension required of the Head Drive in the next iteration (T_{17} - T_{TU}) 8,412 kgf						
	Calculation Notes			Calculation Notes		
	Initial calculations show an additional belt cleaner and pulley resistance of 700 lbf for completeness.			Steady state tensions do not include belt cleaner or drive pulley resistances which are assumed to be driven directly by the motor.		
	Trampling calculation uses tension at beginning of flight			Trampling loss uses average of tension entering and tension leaving the flight		
	Pulley drag calculated with tension entering the flight			Pulley Drag uses average of tension entering and tension leaving the flight		

WWW.CEMANET.ORG has a licensed copy of this document (1490), 2017-10-23, 2017-10-23 Kanit Srikakol, Saraburi, , Thailand

Table 6.153
Initial and final example metric results

9. Dynamic Analysis

General Conveyor Behavior Utilizing Belt Elastic Properties

The inclines and length of the example conveyor justify further analysis for more accurate stopping and starting characteristics than the averages determined from static analysis. One of these important parameters is belt velocity. The static analysis example above uses 150% starting torque to calculate starting time. However, 150% is only an average drive starting torque and actual starting torques produced by various types of motors and drives can vary significantly from the average.

From the example, using inclines loaded only, a dynamic analysis was performed using a general 150% average motor torque starting algorithm as well as a 110% average torque algorithm. Since time is now part of the analysis process, the designer can determine how the selected motor/drive type will actually produce and transmit torque to the drive pulleys. For instance, a motor will take 3-6 seconds to produce its full torque once it is started. Figure 6.155 shows the resulting belt velocity at the primary drive pulley for the two starting algorithms.

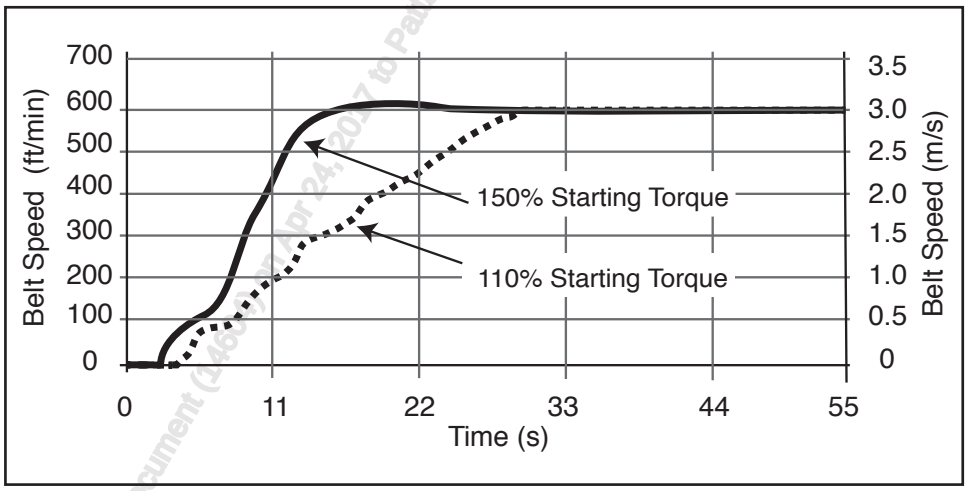

Figure 6.154
Belt velocity for two different starting algorithms

Important information derived from Figure 6.155 might include:

- The time delay before the motor torque exceeds the torque on the holdback and begins accelerating the belt.
- The difference in acceleration time which is inversely proportional to the acceleration torque applied.
- Belt velocity does not increase linearly due to torque characteristics of the drive algorithms and elastic properties of the belt.

WWW.CEMANET.ORG All rights reserved. This document (1486) is issued to Patterapon Sirikeaw (Siemens Thailand) on Apr 24, 2017

Maximum Loads on Components

Also of great interest to a designer is a more accurate understanding of the maximum loads each component will be subjected to during either normal or temporary conditions. The maximum belt tension and maximum drive pulley loads will occur during the same scenario as described above; starting the conveyor with the inclines loaded only.

Figure 6.156 shows the belt tension for this condition at the tight side of the primary drive pulley. This has also been calculated for both the 150% and 110% starting torque algorithms.

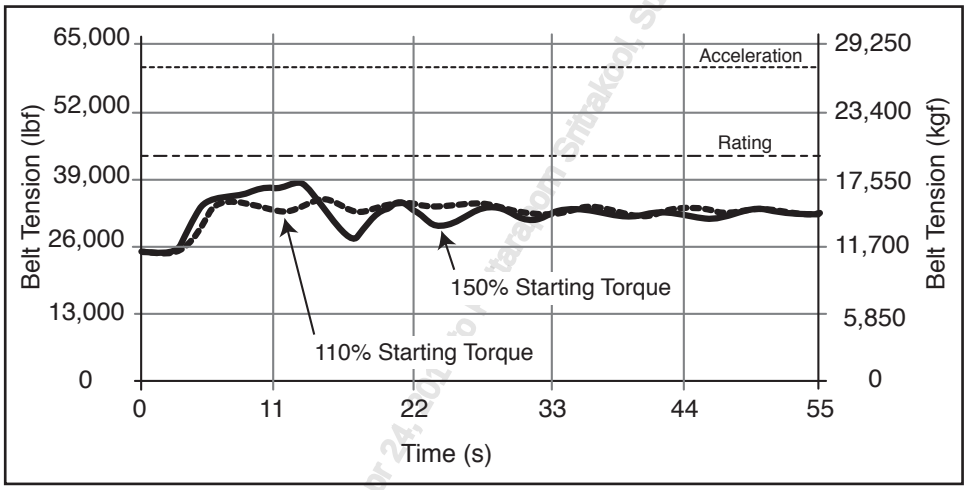

Figure 6.155
Maximum tension when starting using two different starting algorithms

Important information derived from Figure 6.156 might include:

- The higher starting torque induces greater tension fluctuations in the belt (transient tensions or tension waves).
- The maximum belt tension at 150% torque is in the range of 15% higher at 110% torque. This difference in maximum belt tension will adversely affect splice life and increase belt stretch which will dictate longer takeup travel requirements.
- This higher belt stress also results in an equivalent higher load on the drive pulley and all drive components during starting.
- Although not shown specifically on this graphic, understanding belt tensions during starting and stopping with various loading conditions is important in preventing belt liftoff in the concave vertical curve.

Stopping with Declines Loaded Only

As shown in the static example, if the conveyor must be stopped when the declines sections are loaded and the flats and inclines are empty, a brake is necessary to stop the conveyor. Locating the brake in the correct location and sizing it properly to safely stop the conveyor can only be approximated statically and must be simulated dynamically to produce more accurate results. Figure 6.157 shows one particular example of torque on the head end drive pulleys and brake torque on the tail pulley during a decline loaded only stop. In this example, 35,000 ft-lbs (5,052 kgf-m) of brake torque is applied to the tail pulley on a linear ramp over 3 seconds. Also, a 0.5 second delay for the brake to set has been assumed.

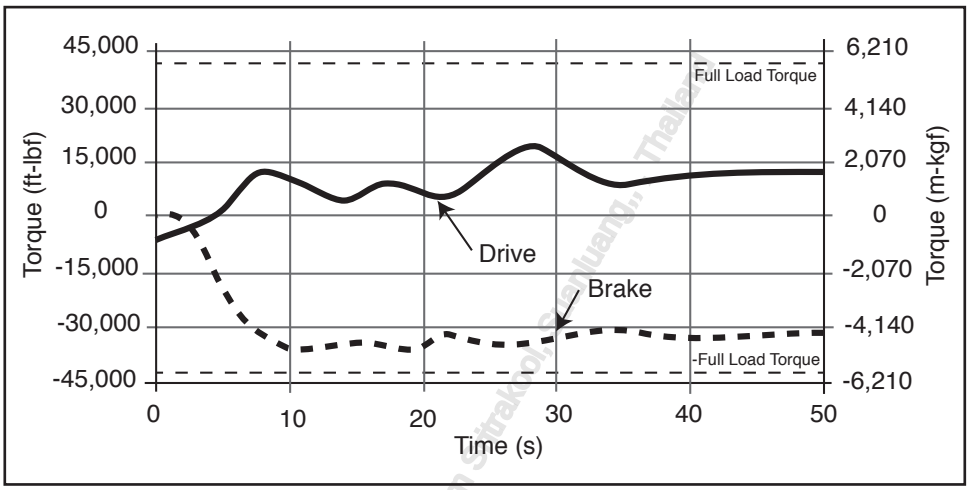

Figure 6.156
Drive and brake torques while stopping the belt with only decline flights loaded

Important information derived from Figure 6.157 might include:

- The actual torque applied to the brake pulley over time including the transients induced by belt elasticity.
- Once the belt has stopped at the drive pulley at 12.5 seconds, the holdback torque on the primary pulley is shown.
- Although not shown in this narrative, maximum belt tensions and pulley loads can also be derived as was in the starting graphics above.
- Brake torque will affect the potential for belt liftoff in the concave curve entering the incline

Starting with Declines Loaded Only

The most difficult condition for the designer to understand in this example conveyor is the need to restart the conveyor once it has been stopped with the declines loaded only. As shown in Figure 6.157, there could be stored torque across the primary drive pulley on the holdback and there is stored torque across the tail pulley on the brake. To start back up, it is necessary to release the brake and start the motors/drives in a controlled and gradual manner. The fact that these two critical locations (head and tail) are separated by over 5,000 ft (1,525 m) of elastic belt makes the problem more difficult.

Although not shown here, if the brake is simply released without starting the motors, the conveyor may accelerate out of control on its own. If the brake is released too quickly and the motors are started too late, the conveyor can potentially accelerate the motor beyond it safe operating rpm and create an unsafe condition.

In this example, we will assume the brake has the heat capacity to be released over a slow 30 second time period and we will assume the motor/drive is of a type capable of being controlled with velocity feedback. Therefore, the brake will be the main factor in determining the conveyor does not accelerate faster than 30 seconds when fully loaded. The drives will produce torque to accelerate only if the load condition dictates drive torque is required to accelerate on the desired 30 second ramp.

www.BeltTORQ.com (Issued to Porter (3604) on Nov 24, 2017 in Pattaporn Sirirakorn, Thailand)

Figure 6.144 shows one example of this algorithm working on the declines loaded only condition. The brake is slowly released while the drives put in a small torque. When the brake is released to the point where the conveyor velocity exceeds the design velocity, the drives take over the holdback function and begin regenerating energy back into the power system in order to maintain design velocity. The switch from the brake to the motors is smooth and controlled.

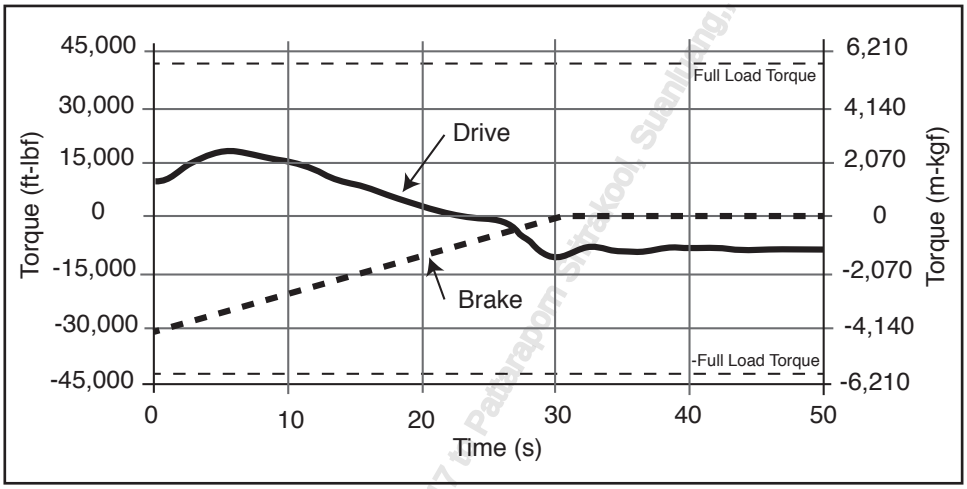

Figure 6.157
Interaction between drive and brake with a 30 second controlled stop

Drive Power

Equation 6.139 provides the calculation for the power required at the drive pulley, P_{dn}. The power required is determined from the predicted belt tension required at the active or drive pulley, T_e, the belt speed, V, and the efficiency of the belt and pulley interface, E_n. Since the calculations, variables and factors in this chapter are structured to produce a realistic but conservative result for T_e, the conveyor designer may or may not want to apply a Safety Factor, SF_d, in Equation 6.139 to the power equation.

The motor power is determined from P_{dn} divided by the efficiency of the drive train. Chapter 13 discusses various drive train arrangements and efficiencies. It is common practice to calculate the required motor power and then select the next larger common motor size.

WWW.CEMANET.ORG has issued this document (CMP) to Apr 24, 2017 by Pattrapom Sirakool, Suanluang, , THAILAND

T_e = 18,798 lbf (Table 6.152 Tension gain in flight 9, Head Pulley)

$V = 600 \frac{ft}{min}$ 1 Hp = 33,000 $\frac{ft - lbf}{min}$

Reference Equation 6.139 Pulley n = 9 with $E_n = 0.95$ $SF_d = 1.1$

Reference Footnote in Table 6.152 $\Delta T_{bc} + \Delta T_{pr} = 700$ lbf

$$P_{bn} = \frac{\Delta T_{en} \times V}{33{,}000} \text{ (Hp) (Linear power seen by the belt at pulley, n)}$$

$$P_{b9} = \frac{(18{,}798 \text{ lbf} + 700 \text{ lbf}) \times 600 \frac{ft}{min}}{33{,}000 \frac{\text{lbf-ft}}{min}} = 354.5 \text{ Hp}$$

$$P_{dn} = \frac{P_{b9} \times SF_d}{E_n} \text{ (Hp) (Minimum rotary power applied to pulley, n)}$$

P_{d9} must be divided by the drive train efficiency to determine the motor power required.
See Chapter 13 Table 13.31 for typical drive train efficiencies.

$$P_{d9} = \frac{354.5 \text{ hp} \times 1.1}{0.95} = 410.5 \text{ Hp (306.6 kW)}$$

$\therefore$ Consider a 450 Hp (350 kW) motor

Figure 6.158
Example calculation for power required at the drive pulley

CHAPTER 6 CONCLUSION

The technology of conveyor design and component technology continues to evolve, so conveyor design is still part art and part science. Because of the iterative nature of conveyor design there is almost always more than one acceptable solution for a set of initial assumptions. An experienced conveyor engineer should be able to use the Universal Method to design a conveyor that delivers the desired capacity and predicts the tension required under the expected range of conditions and requirements. The tension required is then modified by the drive train efficiency to predict the power required for the conveyor. While this chapter refers to safe design of components and the safe operation of the conveyor as a system, there are many other safety, operational and maintenance issues that must be addressed in a complete bulk material handling system. Contact a CEMA Member for conveyor design assistance.

WWW.CEMANET.ORG has sub-licensed this document (4-2-14) on Apr 23, 2017 to Pasarayom Srithapol, Suchuabkiri, Thailand

WWW.CEMANET.ORG has issued this document (14604) on Apr 24, 2017 to Pattarapom Sritrakool, Suanluang, , , Thailand

This Page Left Intentionally Blank

Introduction Pg 271
Determining Belt Specifications Pg 271
Factors in the Composition of Conveyor Belting Pg 271
Conveyor Belt Cover Characteristics, Composition, and Design Pg 272
- General Purpose Rubber Covered Belting
  - Manufacturer's Brand
  - ARPM RMA Grade I
  - ARPM RMA Grade II
  - Cover and Ply Adhesion
  - Special Purpose Belting
  - Chemical Exposure
  - Cover Considerations
  - Molded Covers
  - Frequency Factor

Loading Considerations Pg 278
- Loading Conditions Resulting in Normal Cover Wear
- Loading Conditions Resulting in Minimum Cover Wear
- Loading Conditions Resulting in Maximum Cover Wear
- Breakers

Molded Edge Belting Pg 279
Cut/Slit Belt Edge Pg 279
Steel Cord Belt Covers Pg 279
The Belt Carcass Pg 280
- Carcass Types
  - Textile Reinforcements
  - Steel Reinforcements
  - Steel Cord Carcass

Belt Splices Pg 285
- Vulcanized Splice Advantages
- Vulcanized Splice Disadvantages
- Mechanically Fastened Splice Advantages
- Mechanically Fastened Splice Disadvantages

WWW.CEMANET.COM Assessed document (14604) on Apr 28 2017 to Pattarapom Sritrakool, Suanluang, , , Thailand

Belt And System Considerations Pg 287
Elongation
Troughability and Load Support
Transition Distance
Impact Resistance Pg 291
Lump Weight Factor
Conveyor Belt Selection Pg 294
Tension Ratings
Safety Factors
Belt Monitoring Systems
Periodic and Continuous Conveyor Belt Health Measurement
Pulley Face
Service Conditions
Mechanical Fastener Spliced
Vulcanized Splice
Elevator Belt Tension Recommendations Pg 302
Belt Selection Tables Pg 303

WWW.CEMANET.ORG has issued this document (14604) on Apr 2, 2017 to Pattaraporn Sritrakool, Suanluang, , , Thailand

INTRODUCTION

This chapter addresses the general requirements and method of proper selection of conveyor belting. it is impossible to treat all of the many conveyor belt constructions available. Only those basic types and grades of conveyor belting that apply to a majority of conveyor applications will be covered.

Anyone using the data in this chapter should recognize that a belt selection determined by the data will be conservative. While the selected belt will meet the specified conditions, it may not always be the most economical construction available. This is particularly true because of the continuing developments in the fields of elastomers and synthetic fibers for use in conveyor belts.

DETERMINING BELT SPECIFICATIONS

For major conveyor belt applications, analyze the complete duty and operating requirements of the conveyor to develop the final specification.

Such a complete analysis of a conveyor must consider the following details:

- Material conveyed: general description; bulk density, lbf/ft^3 (kgf/m^3); maximum lump size; presence of oils or chemicals, if any; maximum temperature of load, if hot; requirements for fire resistance.
- Maximum loading rate or required maximum capacity, 2,000 lbf (1,000 kgf) per hour tph (mtph).
- Belt width, inches (mm).
- Belt speed, feet per minute, fpm, (m/s).
- Profile of conveyor: distance along conveyor path, tail to head, feet; lift or drop, ± feet (m), or elevations of top and bottom of any inclines or declines; angles of slope of all inclines or declines; locations and radii of all vertical curves.
- Drive: single-pulley or two-pulley; if dual drive, distribution of total motor power at primary and secondary drive pulleys; angle of belt wrap on drive pulley(s); location of drive; pulley surface, bare or lagged; type of lagging; type of starting to be used.
- Pulley diameters: check against the actual belt specification.
- Takeup: type, location, and amount of travel.
- Idlers: type, roll diameter, angle of trough; spacing, including transition distance at head and tail.
- Type of loading arrangement: numbers of chutes; lumps-to-belt free fall distance; skirtboard length; impact idlers or bed, if any; angle of loading to belt.
- Lowest and highest operating temperature, and extreme weather anticipated.
- Type of belt splice to be used: vulcanized or mechanical.
- Type(s) of belt cleaners to be used.

FACTORS IN THE COMPOSITION OF CONVEYOR BELTING

While a belt conveyor system is composed of many important parts, none is more economically important than the conveyor belt itself, which, in most cases, will represent a substantial part of the initial cost. Therefore, the selection of the conveyor belt must be made with great care.

In general, a conveyor belt consists of three elements: top cover, carcass, and bottom cover. Figure 7.1 illustrates a cross section of a typical belt. The primary purpose of the covers is to protect the belt carcass against damage and from any special deteriorating factors that may be present in the operating environment.

www.CEMA.ORG (Visual Reference Only) May 24, 2017 by Kuttapom Chitrapongchai, Sukkaew , Thailand

The belt carcass carries the tension forces necessary in starting and moving the loaded belt, absorbs the impact energy of material loading, and provides stability for proper alignment and load support over idlers under all conditions of loading.

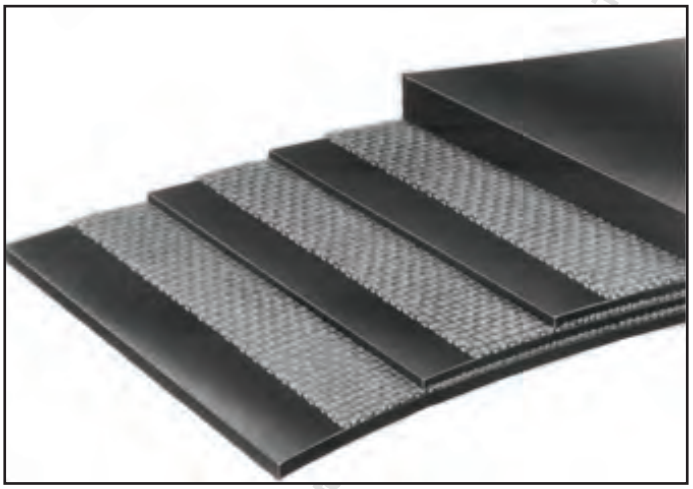

Figure 7.1
Cross section of a multi-ply fabric-reinforced belt (cut/slit edge)

Although covers and carcass are treated as separate components, successful operation depends upon their working together as a single integral unit to provide the required belt characteristics.

CONVEYOR BELT COVERS: CHARACTERISTICS, COMPOSITION, AND DESIGN

Conveyor belting is currently available in a wide range of types and constructions. Varieties of conveyor belting are suitable to fit an extraordinary range of conveyed material, operating conditions and design criteria.

The development of a broad range of synthetic rubbers, polymers, elastomers, and fibers over the past forty years has increased the service life and extended the operational envelope of conveyor belting. Previously, natural rubber covers and cotton fiber reinforcement (carcasses) were the only options.

Today, conveyor belt covers will consist of compounds comprised of natural rubbers, styrene-butadiene rubber (SBR) blends of natural and other synthetics, nitriles, butyl, ethylene propylene-based polymer (EPDM), polychloroprene (Neoprene or CR), polybutadiene (PB), polyvinyl chloride (PVC), urethanes and silicones, etc., and the list goes on and continues to grow. Each of these elastomers has specific usefulness for various ranges of properties and operating conditions.

Conveyor belting and its corresponding cover composition(s) can be designated as either (1) general purpose belting, or (2) special purpose belting. Each of these two broadly classified groups should be further defined depending upon the specific end use.

General Purpose Rubber Covered Belting

General purpose covers and belting serve a broad range of industrial applications including mining, ore processing, lumber, paper/pulp, and agriculture, to name a few. By and large, these belts will have covers of natural rubber, SBR, polybutadiene, and acrylonitrile (ACN) or blends thereof. These cover compounds are further defined by the Association for Rubber Products Manufacturers, (ARPM), formerly a group within the Rubber Manufacturers Association (RMA) and belting industry as either Grade I or Grade II.

Manufacturer's Brand

It is common practice to imprint the belt cover with the identity of the manufacturer and the type of belt. If cleaning of the conveyor belt is a critical issue or the belt is very long, then the brand should be placed on the bottom cover to prevent fines from accumulating in the brand and subsequently falling from the belt.

ARPM RMA Grade I

These covers consist of natural or synthetic rubber or blends which will be characterized by high cut, gouge, and tear resistance and very good to excellent abrasion resistance. They are recommended for service involving sharp and abrasive materials, and for severe impact loading conditions.

ARPM RMA Grade II

The elastomeric composition of these covers will be similar to that of Grade I with good to excellent abrasion resistance in applications involving the conveyance of abrasive materials, but may not provide the degree of cut and gouge resistance of Grade I covers.

When covers are tested in accordance with ASTM D412, the tensile strength and elongation at break shall comply with the requirements of Table 7.2, for the grade of cover, as appropriate.

Grade	Minimum Tensile Strength (psi)	Minimum Tensile Strength (Mpa)	Minimum Elongation @ Break (%)	Maximum Volume Loss ISO 4649 Part B (mm^3)
I	2,500	17	400	125
II	2,000	14	400	175

Table 7.2
Properties of rubber covers

The tensile strength and elongation at break values are not always sufficient in themselves to determine the suitability of the belt cover for a particular service. The values in the above table should only be specified for conveyors or materials with a known history of performance and in cases where it is known that compliance with the value will not adversely affect other in-service properties.

Cover and Ply Adhesion

When belting is tested in accordance with ASTM D378, the adhesion for cover and between adjacent plies should not be less than the values given in Table 7.3.

www.GLOBALSPEC.ORG has licensed this document to Apr 24, 2017 Paderapom Sirapong, Suanluang, Thailand

Adhesion Between Adjacent Plies		Adhesion Between Cover and Ply for Cover Thickness:			
Any Ply Thickness		1/32" (0.8 mm) through 1/16" (1.6 mm)		Greater than 1/16" (1.6 mm)	
30 lbf/in	5 kN/m	16 lbf/in	2.8 kN/m	25 lbf/in	4.4 kN/m

Table 7.3
General purpose rubber cover and ply adhesion

Special Purpose Belting

Special purpose belting and its components (covers) are just that: those that require special characteristics and properties. Conveyor applications and systems that operate outside the normal parameters covered under general purposes will include high temperatures (above 175 °F (80 °C)), low temperatures, (below 40 °F (5 °C)), fire/flame resistance, oil exposure, food ("FDA") processing, and chemical resistance. Conveyor belt manufacturers provide products to meet these and other demands with a wide variety of elastomers and carcass constructions. The following list of conveyor cover compound types is not all inclusive, but is a general guide for special applications:

Hot Materials Handling

Cover compounds consisting of butyl (and bromo/chloro butyl) or EPDM can resist the degrading effects of high temperatures up to approximately 400 °F (200 °C). Some specially formulated SBR-based compounds will perform in high temperature environments, but not generally to the same range or degree as EPDM or butyl-based covers. Neoprene (polychloroprene) and Hypalon (chloro-sulfonated polyethylene, a trademark of E. I. du Pont de Nemours and Company) based compounds also exhibit good heat aging properties. Belting with silicone or Viton (fluorocarbon polymers, a trademark of DuPont Performance Elastomers L.L.C..) covers will withstand very high temperatures best, with extended operating range up to approximately 700 °F (370 °C). High temperature belting is currently classified by type depending on the retained physical properties after exposure to a given temperature for 70 hours (ASTM D865). ARPM classifications are given in Table 7.4.

Classification Type	Test (70 h) Temperature	Maximum Retained Tensile (from original)	Maximum Retained Elongation (from original)	Maximum Hardness Point Change (from original)
ARPM-HR Class 1	212°F (100°C)	-25%	-50%	+20
ARPM-HR Class 2	257°F (125°C)	-30%	-50%	+20
ARPM-HR Class 3	302°F (150°C)	-40%	-60%	+20

Table 7.4
ARPM belt classifications for high temperature applications

Polyester and nylon fibers/textiles will melt at temperatures above 500 °F (260 °C). Loss of dimensional stability and softening will occur well before this temperature is reached. Glass fiber carcasses are often recommended where operating temperatures exceed 400 °F (200°C).

www.CEMA.org Unless noted this document © 2014 CEMA Apr 21, 2017 to Patrick Pan (Shekou, Suanluan, Tianjin)

Oil Resistant Belting

Belt covers designed to resist swelling and degradation in oily environments will often incorporate Nitrile based polymer (NBR), polyvinyl chloride (PVC), or urethane. The type of oil encountered as well as the temperatures in which the belt must operate is of prime importance. Highly aromatic and asphaltene-based materials, as well as exposure to diesel fuel, are best handled with a NBR or urethane-based compound. PVC belting will resist light oil (e. g., mineral and napthenic oils) degradation at lower temperatures. Neoprene/polychloroprene compounds will also resist low aromatic oils and fuels satisfactorily. Currently there are two classifications:

- MOR/VR, for vegetable based or light petroleum oils (which has a maximum of 15% volume swell with ASTM #1 oil, or 140% with ASTM #3 or #609 oil).
- EOR/SOR for extremely oily environments (which has a maximum of 5% volume swell with ASTM #1 oil, or 30% with ASTM #3 or #609 oil).

Food Processing

Food processing entails belt exposure to both vegetable oil and animal fats. In such environments, PVC and NBR-based belt constructions predominate. Both have good resistance to swelling and degradation under these conditions.

Fire/Flame Resistance

Belting requiring flame resistance is engineered to meet underground mining regulations and specifications. Currently, belt and belt compounds using SBR, NBR, CR (Neoprene) and PVC are routinely utilized. Cover compounds are designed to meet specific national or international standards. These standards typically define laboratory tests which either demonstrate that the belt is able to self extinguish after being set on fire (Bunsen burner or gallery tests), or which establish that the belt will not initiate a fire from the heat generated when the belt is stalled against a rotating steel drum, (drum friction test). The latter simulates a potential mine condition where a belt is stalled against a rotating drive pulley.

In the USA, the standard for underground fire resistant belting for gaseous (coal) mines was changed on December 31, 2008 and is now designated by the US Mine Safety and Health Administration's (MSHA) standard CFR Title 30 Section 14. The test procedure is also described in ASTM D378 and the standard is designated as ARPM FR Class I fire resistant belting. The former MSHA fire resistant belt standard for underground mines is no longer supported by MSHA, but the test method is described in ASTM D378 and this standard is designated as ARPM FR Class II fire resistant belting.

Low Temperature Environments

Generally, most general purpose (Grades I and II) belting and compounds will resist stiffening down to -40 ° F(-40 °C). For most general purpose belting, when there are prolonged periods of downtime during which the belt is exposed to -40 °F (-40 °C) for several days or weeks, hard starts may be difficult or deleterious to the belt because of coldset. When these conditions are expected, belts can be obtained which have suitable low temperature plasticizers and low glass-transition polymers or blends incorporated to permit maximum flexibility and operation.

It is good practice under extremely low temperature conditions not to stop the belt for long periods of time as the belt can take a set on the pulleys, and in wet conditions, ice can build up on the structure and along the bottom of pulleys. Ice can severely damage a high modulus or steel cord belt if trapped on a high tension pulley. In such situations it is recommended to have a slow speed or creep capability that can

www.ContiTech.de has secured this document (04/10/2014, 2017 to Paterapom Sakulkoo, Suanluang, Thailand)

be used when the belt is not transporting material. The internal heat generated within the belt is enough to keep it flexible.

Chemical Exposure

Conveyor belting manufacturers should be consulted when systems are being operated in specific chemical environments. The condition in which the conveyor belt is operating should be clearly defined. Consider the chemical concentration and temperature, as well as the possible presence of incidental processing chemicals or oils.

Cover Considerations

The covers should be of sufficient thickness and quality to protect the carcass. Covers for general service applications are listed in Tables 7.5 and 7.6, which list suggested minimum thickness for carrying and pulley side covers, respectively.

The cover gauge required for a specific belt is a function of the material conveyed and the handling methods used. Increased cover thickness is required as the following conditions become more severe: material abrasiveness, maximum material lump size, material weight, height of material drop onto the belt, loading angle, belt speed, and frequency of loading as determined by the frequency factor.

Class of Material	Examples	Thickness* (inch)	Thickness* (mm)
Package Handling	Cartons, Food Products	Friction to 1/32	Friction to 0.8 mm
Light or Fine Non-abrasive	Wood Chips, Pulp, Grain, Bituminous coal, Potash Ore	1/16 to 1/8 inch	1.6 to 3.2
Fine and abrasive	Sand and Gravel, Crushed Stone	1/8 to 3/16	3.2 to 4.8
Heavy, Crushed to 8-inch (203 mm)	Run of Mine Coal or Rock Ores	3/16 to 1/4	4.8 to 6.4
Heavy, Large Lumps	Hard Ores, Slag	1/4 to 5/16	6.4 to 7.9
* Cover thicknesses are nominal values subject to manufacturers' tolerances			

Table 7.5
Suggested minimum carry cover (top cover) thickness for normal conditions: ARPM Grade II

Operating Conditions	Thickness (inch) *	Thickness (mm) *
Non-abrasive Materials	1/32	0.8
Abrasive Materials	1/16	1.6
Impact Loading **	3/32	2.4
* Cover thicknesses are nominal values subject to manufacturers' tolerances.		
**Although an increased cover gauge does help protect the carcass if impact is severe, a correct system design that includes carcass design, top cover thickness, and impact-absorbing belt support in the conveyor loading zone is the preferred method of handling.		

Table 7.6
Suggested minimum pulley cover (bottom cover) thickness: ARPM Grade II

WWW.CEMANET.ORG This is issued to Mr. Arsenio (14604) on 14-Jul-2017 for classroom School, Suanluang, Thailand

Deteriorating Conditions

Table 7.7 establishes the basis for determining cover quality for conditions which attack or cause deterioration of the belt. The actual cover thickness should generally follow the guidelines for a Grade II cover in Table 7.5. For all special materials not listed, or in cases where extreme concentrations of chemical solutions are likely to be encountered, a belt manufacturer should be consulted to determine appropriate cover quality and thickness.

Typical Materials Handled Without Cover Deterioration	
Chemicals	**Materials wetted with or containing the following chemicals and not over 150 °F (65 °C) may be handled satisfactorily on conveyor belts with covers of Grades I and II: Black Sulfate liquor, Ethyl Alcohol Sulfur, elemental, dry, Sulfuric acid (dilute)**
Heat	**Hot fine material up to 150 °F (65 °C)** **Hot lump material up to 150 °F (65 °C)**
Fertilizers	**Super phosphates,Triple super phosphate Phosphate rock or pebbled, acid treated, to produce super or triple super phosphate**
With loading conditions resulting in maximum cover wear, the top cover thickness may have to be increased by 1/16 to 3/16 inch (1.6 to 4.8 mm) above the values listed in table 7.5 in order to obtain a reasonable life.	

Table 7.7
Deteriorating conditions for conveyor belt covers.

Materials Handled Resulting in Deterioration of Covers

Chemicals not listed may have a deteriorating effect on the rubber covers of conveyor belting, but, because of considerations of concentration and temperature, do not lend themselves readily to classification. Therefore, when handling chemicals not listed in Table 7.7, consult the belt manufacturer for cover quality recommendations.

Molded Covers

For special applications and/or unusual operating conditions, covers with special molded surfaces may be used to advantage. One type has a rough top, or various patterns of molded surface, designed primarily for conveying packages up inclines, but is also occasionally used for conveying light-weight bulk materials on steep inclines. The second type is a ribbed or cleated cover used in bulk conveying to allow the conveyor incline to be increased without backsliding the load. Also, special designs for handling wet materials or slurries permit drainage or retention of fluids as required.

Frequency Factor

The frequency factor indicates the number of minutes for the belt to make one complete turn or revolution. It can be determined using the following formula:

$$F_f = \frac{2 \times L}{V}$$

Equation 7.8
F_f Frequency factor

www.CEMA.ORG This issue of this document (1804) on Apr 24, 2014 is licensed to Suranaree University of Technology, Thailand

$$F_f = \frac{2 \times L}{V} = \frac{2 \times 3{,}515 \text{ ft}}{600 \frac{\text{ft}}{\text{min}}} = 11.7 \text{ min}$$

Figure 7.9
Example frequency factor calculation

Where:

L = Center-to-center length of the belt conveyor
V = Belt speed
F_f = Frequency factor in minutes

LOADING CONSIDERATIONS

For a frequency factor of 4.0 or over, minimum top cover thicknesses can be considered based on the loading conditions. For a frequency factor of 0.2, the appropriate top cover thickness should be increased up to twice this minimum amount. For frequency factors between 0.2 and 4.0 increase the top cover thickness proportionally.

Loading Conditions Resulting in Normal Cover Wear

- Material feed is in the same direction as belt travel. See Chapter 12, "Loading the Belt."
- Equivalent free fall of material onto the conveyor belt is not over 4 feet (1.2 m).
- Loading area of the belt conveyor is horizontal or has a slope of not more than 8 degrees.
- Properly designed chutes and skirtboards to form, center, and settle the load on the belt. See Chapter 12, "Loading Chutes and Skirtboards."
- Material temperature is in the range of 30 °F to 150 °F (-1 °C to 65 °C).
- Material handled contains nothing that will deteriorate the cover or carcass of the belt. See Table 7.7.

Loading Conditions Resulting in Minimum Cover Wear

All the conditions above (resulting in normal cover wear) plus the following:

- In the process of loading, the material is traveling at approximately the same speed as the belt. See speed-up conveyor, Chapter 12, "Direction of Loading. "
- Special attention has been paid to the equipment design in the loading area to reduce impact on the conveyor belt to a minimum. A minimum is an equivalent free fall of less than 3 ft (1.0 m). The use of a carefully designed loading chute and the use of adequate, impact-absorbing belt support are recommended.
- Provision has been made in loading to place the fines on the conveyor belt first, to provide a bed for large lumps. See Chapter 12, "Loading Chutes,".
- When loading conditions resulting in minimum cover wear, top covers of a conveyor belt sometimes can be reduced 1/32 to 1/16 inch (0.8 to 1.5 mm) from the values listed in Table 7.5.
- Cover Wear can be significantly improved by employing a curved or "spoon" chute. These chutes are engineered to deliver the material onto the belt with minimum relative motion and drop height.

www.CEMAFOR has sold this document (0 pages) on Apr 24, 2017 to Puttipoom Sirisakool, Chanluang, , , Thailand

Loading Conditions Resulting in Maximum Cover Wear

Any of the following conditions constitute loading conditions resulting in maximum cover wear:

- Material is loaded 90 degrees transversely (right angle) or greater angle to the direction of the belt. See Chapter 12, "Direction of Loading."
- Loading area has a slope in excess of 8 degrees to the horizontal.
- Equivalent free fall of the loaded material is greater than 4 feet (1.2 m).
- Material loaded has no velocity in the direction of belt travel, or has a negative velocity in the direction of belt travel.

Breakers

Breakers are woven fabrics primarily of nylon and/or polyester. The "Leno" weave is most often utilized because of its open nature. Cord or transcord (woven cord) may also be incorporated. Placement of breakers is generally above the carcass (or below if applied to the pulley cover). Because of the open nature of their weave, these fabrics tend to dissipate impact energy and help to prevent puncture of the belt carcass from sharp materials (rip-rap and hard ores) through the cover. Cover adhesion may also be increased by adding breakers, but this is not the primary reason for their use today.

MOLDED EDGE BELTING

In the past, all belts were manufactured totally encapsulated in rubber compound (molded edge). This was to prevent moisture and chemical degradation of what was then cotton and rayon carcasses. Now, with the almost exclusive use of synthetic fibers, the need to extend the covers around the edge of the belt is minimal. Molded edge belts are now made for applications where "stringing" (warp yarns from the carcass snagging on the system supports and idlers) is anticipated, or where process chemicals and leaching agents (as in metal ore processing) are concentrated enough to have adverse effect on the polyester and nylon carcasses. All steel cord belting is encapsulated or molded edge.

CUT/SLIT EDGE BELTING

Cut or slit edge belting is the predominant heavy-duty belt type offered today. The polyester and nylon fabrics are resistant to moisture and mildew attack as well as the effects of most chemicals.

STEEL CORD BELT COVERS

To protect the steel cords from impact, abrasion, and water during the entire service life of the belt, a minimum thickness of rubber must encapsulate the cords. Table 7.11 indicates the minimum thickness "F" above and below the cords required for this protection. Additional rubber B and C indicate the thickness used for cover wear. See Figure 7.10.

www.CEMAEDUCATION.org This is issued as document (Rapid City) on 21 Jul 2017 to Prinyaporn Sittirakool, Suratthani, , Thailand

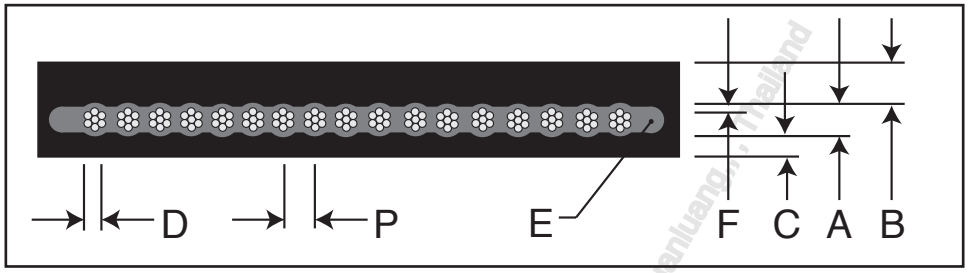

Figure 7.10
Protecting steel cords with rubber

Where:

A = Protective covering for cords during the entire belt life (A = 2F + D)
B = Amount of top cover used for the service life of the belt
C = Amount of bottom cover used for the service life of the belt
D = Diameter of the cord
E = Rubber encapsulating the steel cords and especially compounded for compatibility with the cover rubber and bonding to the steel cords
F = Thickness of rubber to protect the cords during service. This protective rubber is not part of the top or bottom wear covers used to estimate belt tonnage.
P = Cord pitch

Cord Diameter		Minimum Thickness "F" (Above and Below Cords)	
in	mm	in	mm
0.161	4.1	0.137	3.5
0.220	5.6	0.157	3.9
0.327	8.3	0.228	5.8
0.374	9.5	0.228	5.8 *
*This value has been lowered from the calculated 6.6 mm as a result of favorable field experience. For thickness of covers "B" and "C" consult the belt manufacturer.			
Minimum thickness of protective rubber "F" should not be less than .137 inches (3.5 mm) or 0.7 times cord diameter, whichever is greater.			

Table 7.11
Guide for minimum protective rubber "F" in Figure 7.10

THE BELT CARCASS

The covers of a belt provide protection for the tension member or carcass of the belt. The carcass carries the load and is the primary reinforcement for resistance to tear and impact and for mechanical fastener retention. Most conveyor belt carcasses are made of one or more plies of woven fabric/textile. High tension carcasses of single-layered, cabled-steel cord are also employed.

WWW.CEMANET.ORG Licensed this document (14504) on Apr 24 2017 to Pattapon Tantrakool, Suanluang, Thailand

Carcass Types

Depending on the type and/or duty expected of a belt, various carcass styles are possible. The advent of high tenacity (strength) synthetic fibers (polyester/nylon/aramid) has changed conveyor belt and system design tremendously since their introduction. Although some multi-ply cotton carcass belts are still manufactured and in use, the thrust of heavy-duty conveyor belt technology is directed at reduced multi-ply polyester and nylon belting with standard fabric offerings in pounds per inch width (PIW) or kilo Newtons per meter (kN/m) tension ratings in multiples of 75, 110, 150, and 200 PIW (13, 19, ,26 and 35 kN/m) for standard "rubber" belting. New high strength fabrics such as triple warp and double faced twill weaves achieve up to 1250 PIW (219 kN/m) strength.

Straight warp fabric/carcass designs have also been available since the early 1980s, which carry the concept of reduced-ply and lighter belting further. Straight warp carcass designs generally have high impact and tear resistance so they are often used in demanding applications. PVC belting often utilizes a solid or interwoven carcass for higher tension, heavy-duty conveyor systems. Ultra-high tension conveyors will require the use of steel cord/cable belts and, more recently, Aramid-based carcass design. Lightweight belting of rubber, PVC, or urethane will generally have an interwoven carcass of spun or filament polyester or nylon as well as standard cotton fabrics and blends.

Detailed descriptions of these fabrics and carcass designs are listed below as textile reinforcements.

Common Name	Composition	General Comments
Cotton	**Natural Cellulose**	**Only natural fiber used to any great extent for belting. High moisture absorption. Susceptible to mildew attack and loss of strength.**
Glass	**Glass**	**High strength, very low elongation. Used in high temperature applications.**
KEVLAR*	**Para-aramid**	**Very low elongation and very high strength. Does not melt but does decompose at high temperatures**
NOMEX*	**Meta-aramid**	**Very high strength and high elongation and excellent flame resistance. Excellent high-temperature properties.**
Nylon	**Polyamide**	**High strength and high elongation, with good resistance to abrasion, fatigue and impact. Moderate moisture absorption. High resistance to mildew.**
Polyester	**Polyester**	**High strength, low elongation. Good abrasion and fatigue resistance. Low moisture absorption. Excellent resistance to mildew.**
Steel Cord	**Steel**	**Very high strength, very low elongation. Superior troughing characteristics. Excellent heat resistance. Good fatigue and abrasion resistance.**
*** KEVLAR and NOMEX are registered trademarks of du Pont de Nemours and Company**		

Table 7.12
Some materials used in belting reinforcement (belt carcass).

www.CEMANET.ORG has issued this document (14004) on May 24, 2012 to Pubracion Cemanet, Sucursal Chile

Textile Reinforcements

Textile fabrics are the most commonly used materials for reinforcing plies in conveyor and elevator belting. Textile fabrics are also used for conveyor belt "breakers" plies. Fabric properties are governed by the yarn material and size and by the fabric construction and weave. Standard heavy duty multi-ply belt fabrics

are dip-treated with an Resorcinol-Formaldehyde-Latex (RFL) coating to provide adequate adhesion with rubber compounds. These fabrics are woven (usually at right angles) of warp yarns, which run lengthwise, and filling (weft) yarns, which run crosswise.

Non-woven Fabrics

A mat of fibers may also be bonded together chemically and/or needle-punched to provide strength and flexibility.

Woven Fabrics

The most common, and least complicated, fabric pattern used for flat belts is the plain weave shown in Figure 7.13. In this construction the warp and filling yarns cross each other alternately. A belt with two or more of these layers of fabric is known as a multi-ply belt. Other common constructions used to a lesser degree include broken twill (Figure 7.14); basket /Oxford weave (Figure 7.15); and Leno weave (Figure 7.16), which has an open mesh and is usually used as a breaker fabric.

Woven Cord is composed of strong warp yarns with very fine filling yarns used to hold the warp yarns in position. Solid woven (Figure 7.17) consists of interwoven multiple layers of warp and filling yarns.

Straight warp fabric (Figure 7.18) contains basic tension-bearing warp yarns which are essentially straight, that is, without crimp. Also, binder warp yarns are interwoven with the filling yarns to provide mechanical fastener holding strength.

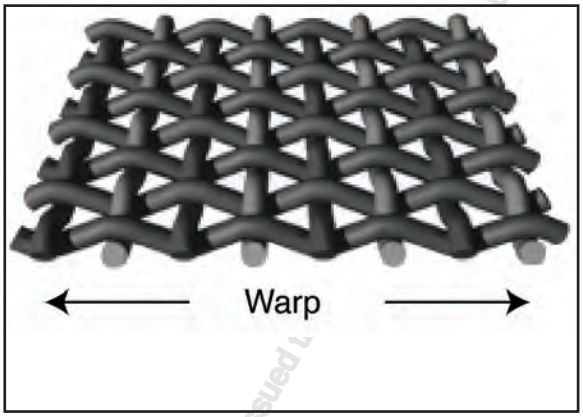

Figure 7.13
Plain weave

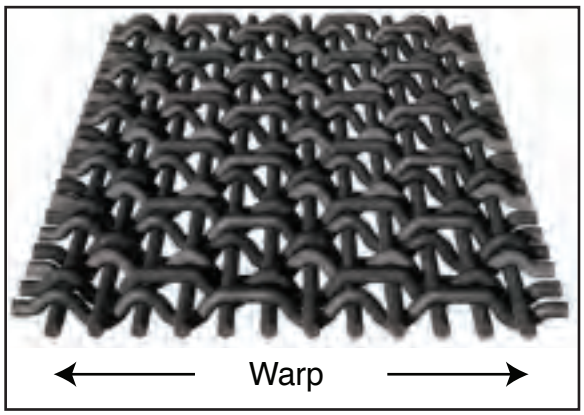

Figure 7.14
Broken twill weave

WWW.CEMANET.ORG has issued to ... on 24/4/2017 to ... Suanluang , Thailand

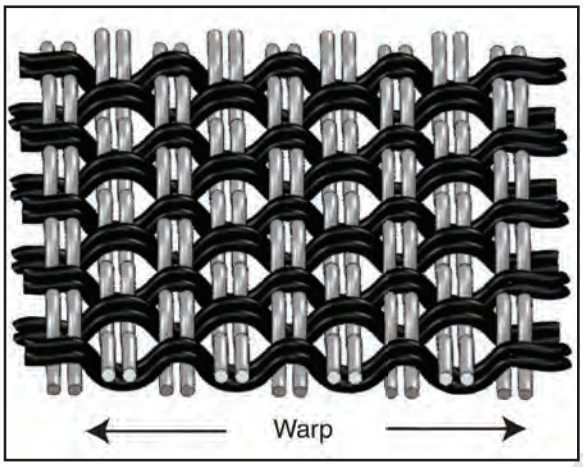

Figure 7.15
Basket or Oxford weave

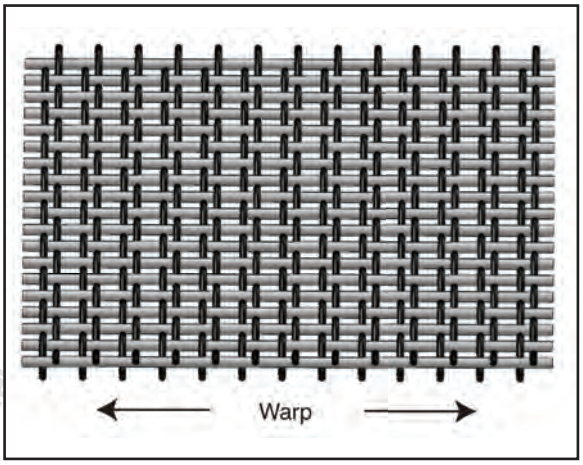

Figure 7.16
Leno weave

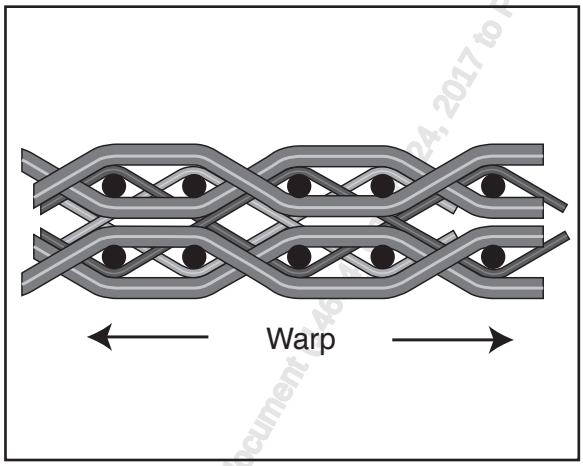

Figure 7.17
Solid woven fabric cross-section view

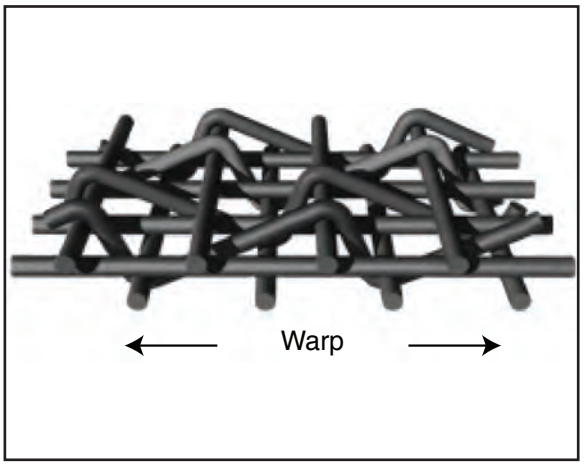

Figure 7.18
Straight warp fabric

Belting Fabrics by Fiber Content

Some of the most commonly used belting fabrics known by their major fiber content are:

- Cotton — Fabric with cotton in both the warp and filling yarns.
- Cotton-Synthetic — Fabric with cotton warp yarns and synthetic filling yarns. The synthetics most commonly used are nylon and polyester.
- Polyester — Fabric with polyester fiber warp yarns and filling yarns.
- Nylon — Fabric with nylon fiber warp and filling yarns.
- Polyester-Nylon — Fabric with polyester warp and nylon filling yarns.

Solid woven fabrics are composed of spun and/or filament yarns. The spun yarns commonly used may be either cotton or synthetic or combinations thereof. The filament yarns are usually nylon or polyester.

WWW.CEMANET.ORG This issued this document [illegible] 24, 2017 to Pattarapon Sritra

Steel Reinforcements

Steel cord is used as reinforcement in belting to satisfy the requirements of the service conditions. Steel cord is used to obtain high strength, excellent length stability, low bending stresses and, in some cases, to provide superior troughing characteristics. The wires or filaments used in conveyor belt steel cords are usually made of high carbon steel and have a surface finish which facilitates adhesion to the surrounding rubber and reduces corrosion during use.

Steel Cord Carcass

Steel cord conveyor belts are made with a single layer of parallel, uniformly tensioned steel cords serving as the load bearing member. The cords are completely embedded in elastomeric compound, as shown in Figure 7.19. Steel cord belting is made in two construction types:

- All gum compound construction with steel cords and elastomeric compound only.
- Fabric reinforced construction with one or more plies of rubberized fabric above and/or below the steel cords and separated from the cords by the elastomeric compound. This construction is only used in special high impact service applications.

Both types have molded edges. Steel cord belts have covers of elastomeric compounds selected for the expected service conditions.



Figure 7.19
All-Gum steel cord belt

Other Wire Components

Several other forms of wire are used in belting for special purposes such as rip resistance and transverse stiffness. A variety of wire structures are used, some of which include (1) pierce tape, (2) flat wire braid, (3) tire tread wire, and (4) wire tire cord.

WWW.CEMAT.ORG

BELT SPLICES

Conveyor belting is made endless, usually at the job site, by the use of either mechanical fasteners or vulcanized splices. Figure 7.20 illustrates a vulcanized fabric belt splice and Figure 7.21 illustrates a steel-cord belt splice. The vulcanized-splice method provides a stronger connection and longer service life. However, in many cases a mechanical fastener splice is acceptable, and in certain cases it actually may be preferred. Some of the advantages and disadvantages of vulcanized versus mechanically-fastened splices are described below. Figure 7.21 illustrates a steel cord belt splice. For high-tension fabric belts with heavy gauge fabrics and for belts with aramid cords, a finger splice is used instead of a standard ply splice. In the finger splice mating triangular fingers are cut into the carcass of the belt ends to be joined. The fingers improve the flexibility of the splice by breaking up the joint line into many small sections. A breaker fabric is used over the fingered section to help distribute the tension transfer from one belt end to the other.

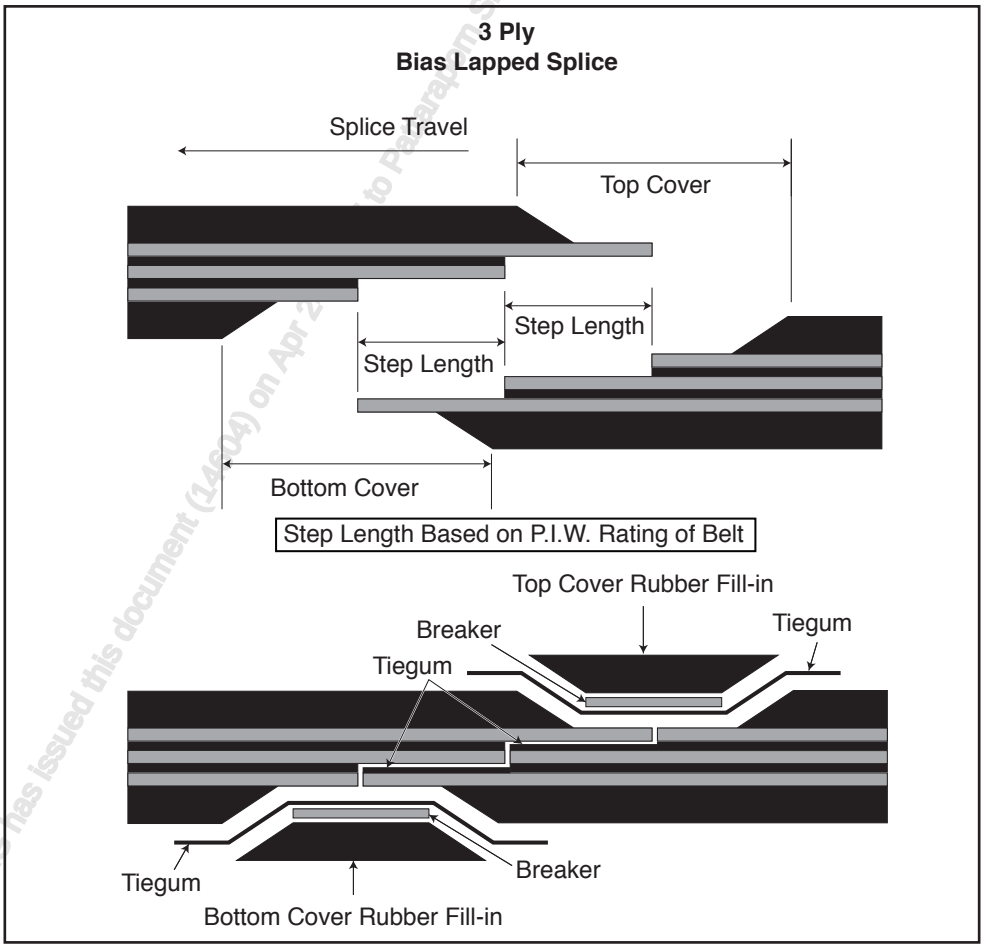

Figure 7.20
Vulcanized fabric belt splice.

WWW.CEMANET.ORG has issued this document (14604) on Apr 2 to Pilaraphon Chirathivat (pilaraphon_c@hotmail.com), Thailand

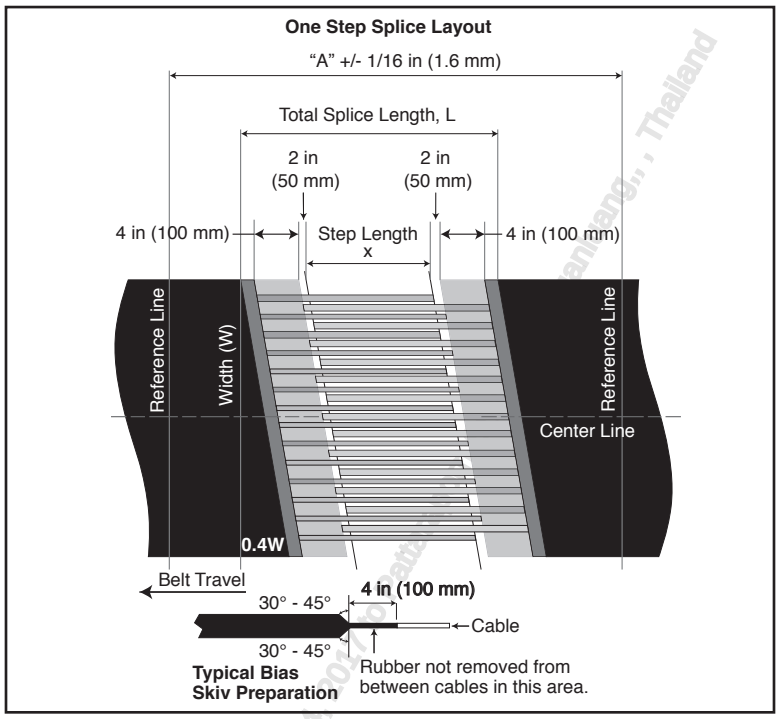

Figure 7.21
Vulcanized steel-cable belt splice

Vulcanized Splice Advantages

- Strength. It has the highest practical strength.
- Long service life. Correctly applied on the appropriate conveyor equipment and properly cared for, a vulcanized splice can last for years. However, with the exception of steel cord belts, a vulcanized splice normally will not last for the life of the belt.
- Cleanliness. A vulcanized splice is smooth and continuous. Thus, conveyed material cannot seep through it. Also, a vulcanized splice does not damage or interfere with belt cleaners, as can be the case with mechanically-fastened splices.

Vulcanized Splice Disadvantages:

- Greater initial expense. The initial cost of a vulcanized splice is many times greater than that of a mechanically fastened splice.
- Need to provide longer take up travel to accommodate both elastic and permanent variation in belt length.
- Replacing or renewing a vulcanized splice can be time consuming and costly, especially in emergency repair situations.
- Greater complexity. A vulcanized splice is affected by splice materials quality and age as well as splice operator errors. Only trained, experienced splicers should be used. Vulcanized splice materials have limited shelf lives which can be extended with refrigerated storage. Over-age materials should be replaced with fresh materials and should not be used.

www.conveyor-belt-guide.com

Mechanically Fastened Splice Advantages

- Quick to make. A mechanically fastened splice can be installed by experienced personnel in a very short time, whereas it takes hours to complete a vulcanized splice.
- Low initial expense. The cost of labor and fasteners for a mechanically fastened splice will be a fraction of the cost of a vulcanized splice. Usually, only hand tools are required.
- Takeup travel problems are minimized. If belt length variations exceed the amount which the takeup is capable of accommodating, the belt can be shortened and re-spliced quickly at relatively small cost.



Figure 7.22
Hinged-plate type of mechanical splice.

Mechanically Fastened Splice Disadvantages

- Exposure of cut belt ends to the effects of moisture and materials may have a deleterious effect on the belt carcass fabric.
- Rough surface. Mechanical fasteners do not present as smooth a surface at the splice as a vulcanized splice. Belt cleaners and belt system supports sometimes catch on the fasteners with resultant damage to the splice, cleaner, or belt.
- It is very difficult to produce a mechanically fastened splice that can be considered leak-proof in conveying fine materials.
- In hot service, fasteners retain heat and transmit it directly into the belt carcass. This may cause local carcass degradation and early splice failure.

BELT AND SYSTEM CONSIDERATIONS

Elongation

The longitudinal (warp-wise) elongation of multi- or reduced-ply belts at the normal tension for the whole belt is usually less than 4 percent. The longitudinal elongation of the whole belt at its breaking strength is usually greater than 10 percent. This statement does not apply to certain high modulus, i.e., low stretch or steel cord belts.

www.CEMA-BELTING.org - Issued to: [illegible] (1-4602) - Apr 23 2012 [illegible] (10:51)

Type of Take-up	Fastened Splices		Vulcanized Splices	
	100% Rated Tension	75% or less Rated Tension	100% Rated Tension	75% or less Rated Tension
Screw Take-up	2%	1.5%	4% **	3% **
Automatic Take-up	1.5%	1%	2.5% + 2 ft. 2.5% + (600 mm)	
**Only short endless feeder belts and the like should be vulcanized on a conveyor with a screw take-up.				

Table 7.23
Recommended take-up travel in percent of center distance for belts installed per manufacturers' instructions



Figure 7.24
In-line three equal roll troughing Idler.

Troughability and Load Support

In order to achieve desired carrying capacities without spillage over the edges, most bulk material-carrying conveyor belts are operated in a troughed configuration where the trough is usually formed by a three roll idler system as indicated in Figure 7.24. The angle of the troughing rolls will usually range from 20 degrees to 45 degrees.

When the belt is running empty, it must have sufficient lateral flexibility to retain contact with the center roll. Failure to do so will usually cause the belt to wander from side to side, and considerable edge damage may result.

Conversely, when the belt is running fully loaded, it must have sufficient lateral stiffness to support the load and bridge the gap between the center and troughing rolls. If the belt is too flexible in this regard, or if the idler gap is too large, it may tend to crease into the idler gap and fail prematurely at that point. CEMA does not have a standard covering maximum roll gap for belt conveyor idlers. The potential problem can be reduced through selection and verification of the application with the belt and idler manufacturers. The CEMA roll gap varies with roll diameter and angle of trough, i.e.: 6-inch (152 mm) diameter rolls have a smaller gap than 5-inch (127 mm) diameter rolls, and a 35-degree trough has a smaller gap than a 20-degree trough.

From the foregoing, it is apparent that there are two extremes of lateral belt flexibility to be considered in making a belt selection and these are generally referred to as minimum and maximum ply design. Refer

to manufacturer's published tables to resolve belt selection at or near either minimum or maximum ply extreme. Often there are two or more fabrics available with different trough characteristics.

Several belt constructions made from one or more plies of synthetic fabrics are widely used and are generally referred to as multi- or reduced-ply constructions. Because of the wide variety of fabric strengths, constructions, and other factors offered in these types of belt, it is necessary to consult the various manufacturers for specific data. Tables 7.39 through 7.45 contain typical belt selection data.

Transition Distance

Proper transition distance from the terminal pulley to the full trough configuration is important for belt, splice and idler life and in controlling spillage. The length of the transition can be a significant constraint especially on mobile or articulating conveyors and in retrofit applications. Transition idlers are available at fixed or adjustable trough angles to support the belt in the transition. In no case should the load rating of an idler used in the transition be exceeded.

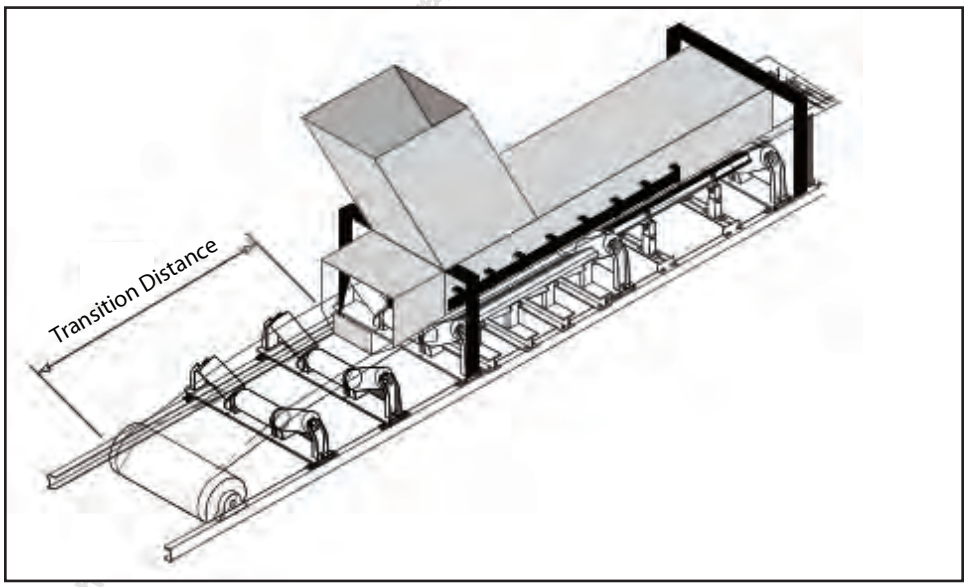

Figure 7.25
Troughing idler spacing adjacent to terminal head or tail pulleys

The stress distribution across the belt in the transition is not uniform. Generally the tension is higher at the edges than in the center of the belt in the transition. If the transition is too short the belt edge stress may exceed the elastic limit of the carcass, the belt may buckle in the center or the belt may lift off the transition idlers. If the edge stress is too high the belt may be permanently stretched, splices may fail, transition idler wing rolls will see excessive loads and belt tracking will be effected. Buckling in the middle of the belt from negative stress (compression) can lead to belt damage and splice failure. Spillage and belt grooving at the skirtboards can be expected if the belt lifts from the transition idlers. Loading on the transition makes sealing of the transfer difficult and leads to belt grooving.

Traditionally, simplified charts have been widely used to determine transition distances. Transitions are classified by the distance the terminal pulley is above the center of the first full troughing idler. Less than full transitions have been used to shorten the overall conveyor length, assuming that these transitions reduce edge stresses. When the transition exceeds one-third trough depth there is a tendency for the unloaded belt to lift from the transition idlers.

Therefore, CEMA recommends for critical applications the correct transition distance should be calculated under all expected tensions based on the belt manufacturer's recommendations. One method for calculating the transition distance is given in ISO5293-2008. Charts 7.27 and 7.29 are provided for reference.

CEMA Recommendation

- Always use metal rollers of the proper load rating for transition idlers.
- Never loaded on a transition, start loading after at least one full troughing idler.
- The full transition arrangement is the CEMA preferred arrangement for transitions before loading.
- The one third transition is the CEMA preferred arrangement for transitions at the discharge.

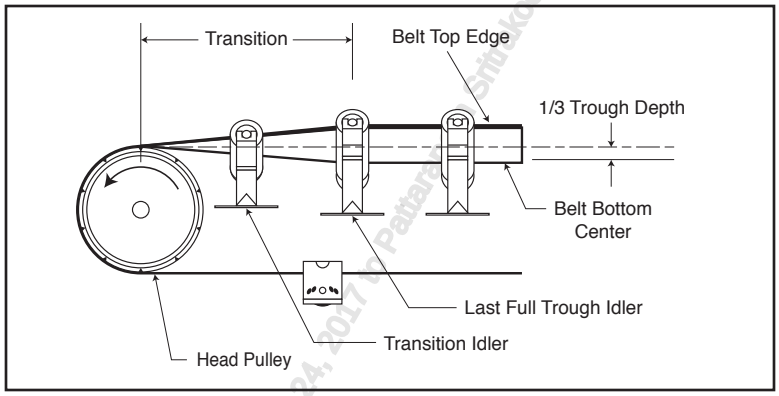

Figure 7.26
One third trough transition from last fully troughed idler to pulley

Idler Trough Angle	% Rated Belt Tension	Transition Distance = Factor × Belt Width (BW)	
		Fabric Belts	Steel Cord Belts
20°	> 90%	1.2	2.7
	60% to 90%	0.9	2.1
	< 60%	0.6	1.3
35°	> 90%	2.1	4.5
	60% to 90%	1.4	3.5
	< 60%	1.2	2.4
45°	> 90%	2.6	5.3
	60% to 90%	2.0	4.3
	< 60%	1.6	3.1

Table 7.27
One third trough minimum transition distance ratios

WWW.CEMANET.ORG has issued this document (3rd ed) on Apr 24, 2017 to Patarapol Smitakol, Siam Nylon Co., Ltd., , , Thailand

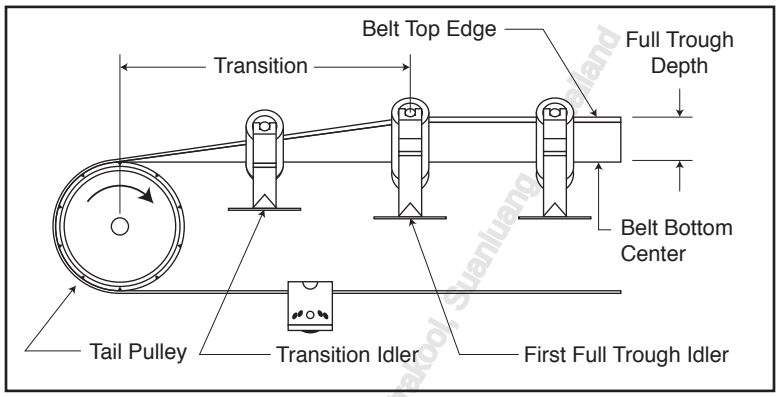

Figure 7.28
Full trough transition from tail pulley to first fully troughed idler

Idler Trough Angle	% Rated Belt Tension	Recommended Transition Distance = Factor × Belt Width (BW)	
		Fabric Belts	Steel Cord Belts
20°	> 90%	1.8	4.0
	60% to 90%	1.6	3.2
	< 60%	1.2	2.8
35°	> 90%	3.2	6.8
	60% to 90%	2.4	5.2
	< 60%	1.8	3.6
45°	> 90%	4.0	8.0
	60% to 90%	3.2	6.4
	< 60%	2.4	4.4

Table 7.29
Full trough CEMA recommended minimum transition distance ratios

IMPACT RESISTANCE

Loading bulk material on a conveyor belt creates some impacting force on the belt. This occurs since the material is dropped from some height above the belt surface and the forward speed of the belt may be different than the speed of the material when it contacts the belt.

Fine materials, regardless of weight per unit volume, do not present a problem on impacting the belt because the force is spread over a relatively large surface area. Cover damage due to gouging is minimal and carcass bruising is normally very low in operations involving fine materials.

Lumpy materials can cause appreciable impact on the belt. The heavier the lump, the greater height of fall, or the greater its angular velocity when it contacts the belt, the greater will be the energy tending to rupture the belt. When the material strikes the belt directly over a support such as an idler, damage to the carcass can result from the crushing action of the lump against the idler-supported belt.

Lumpy material having sharp corners and edges can cause cover nicks, cuts, and gouges. The heavier the lump, the greater height of fall, and the greater it's angular velocity at the time of contacting the belt, the

www.CEMANET.ORG has licensed this document (1460) to Patarapon Sritakool, Suanluang, Thailand

more extensive will be the damage to the cover. Sharp, pointed lumps can even penetrate the cover into the carcass and in rare instances completely penetrate through the belt.

To minimize impact damage, every effort should be made to provide good loading conditions for the material handled. Good loading conditions minimize the material's free fall drop height and velocity relative to the belt. Recommend the practice of allowing material fines to fall onto the belt before the lumpy material. The fines help to distribute the impact load over a larger area of the belt and thereby reduce localized belt cover damage.

The selection of a cover grade and thickness, the type of textile fiber, fabric design and number of plies can be varied depending upon the severity of the impact conditions. Given full information regarding the material conveyed and the loading conditions, the belt manufacturer can provide a belt that will embody the necessary elements to resist the damaging effects of impact.

The maximum fabric ratings shown in Table 7.30 are based on the use of impact absorbing belt support idlers or cradles and good design of loading and transfer areas. The impact energy equals the lump weight factor (Table 7.33) times the equivalent free fall.

Number of Plies	Fabric Rating per Ply PIW (kN/m)				
1	75 (13.1)	110 (19.3)	150 (26.3)	200 (35.0)	250 (43.8)
2	300 (52.4)	450 (78.6)	600 (104.8)	700 (122.3)	750 (131.0)
3	400 (69.9)	600 (104.8)	700 (122.3)	800 (139.7)	850 (148.5)
4	500 (87.3)	700 (122.3)	800 (139.7)	900 (157.2)	950 (165.9)
5	N/A	800 (139.7)	900 (157.2)	1000 (174.7)	1100 (192.1)
6	N/A	900 (157.2)	950 (165.9)	1100 (192.1)	1200 (209.6)
Note 1: Where the actual impact energy is greater than that shown consult the conveyor belt manufacturer.					
Note 2: Impact rating is based on 10% lumps and 90% fines. If lumps exceed 10%, add one more ply to the belt.					
Note 3: For material size greater than 4 inches (100 mm) add one more ply to the belt.					

Table 7.30
Estimated maximum impact rating multi-ply or reduced-ply belts

$$H_e = H_f + H_r \times \sin(\theta_i)$$

Equation 7.31
Equivalent free fall calculation

WWW.CEMANET.ORG Downloaded this document (1004) on Aug 04 2017 to Pazarapam Sankar (Suanluang) Thailand

Where:

H_f = Equivalent free fall
H_r = Vertical height on loading chute slope where material contacts
θ_i = Angle in degrees that chute slope makes with the horizontal

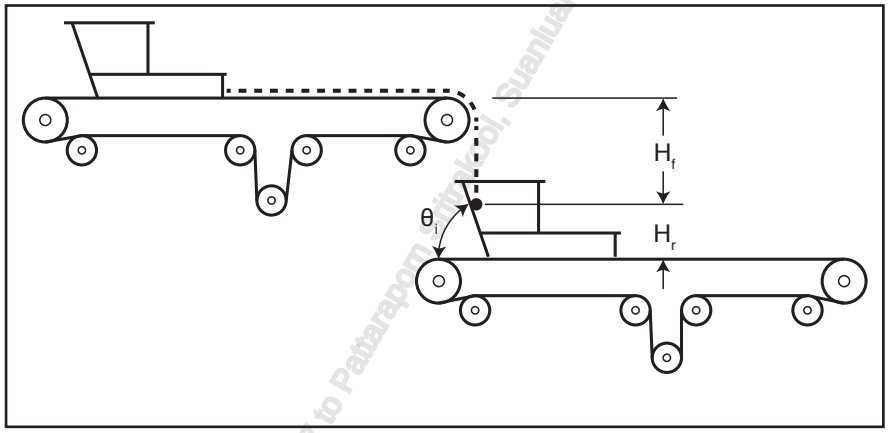

Figure 7.32
Equivalent free fall and location of values H_f and H_r

Lump Weight Factor

The following tables are a close approximation of the weight of a lump using the solid density (not bulk density) of the bulk solid and a cubic lump. If the material tends to form in slabs the lump weight can be 2 to 3 times that listed in Table 7.33.

Solid Density lbf/ft³ (kgf/m³)	Cube Lump Size in (mm)											
	2 (50)	3 (75)	4 (100)	5 (125)	6 (150)	7 (175)	8 (200)	10 (250)	12 (300)	14 (350)	16 (400)	18 (500)
50 (800)	0.2 (0.1)	0.8 (0.3)	1.9 (0.8)	3.6 (1.6)	6.3 (2.7)	9.9 (4.3)	14.8 (6.4)	28.9 (12.5)	50.0 (21.6)	79.4 (34.3)	118.5 (51.2)	168.8 (100.0)
100 (1,600)	0.5 (0.2)	1.6 (0.7)	3.7 (1.6)	7.2 (3.1)	12.5 (5.4)	19.8 (8.6)	29.6 (12.8)	57.9 (25.0)	100.0 (43.2)	158.8 (68.6)	237.0 (102.4)	337.5 (200.0)
200 (3,200)	0.9 (0.4)	3.1 (1.4)	7.4 (3.2)	14.5 (6.3)	25.0 (10.8)	39.7 (17.2)	59.3 (25.6)	115.7 (50.0)	200.0 (86.4)	317.6 (137.2)	474.1 (204.8)	675.0 (400.0)
300 (4,800)	1.4 (0.6)	4.7 (2.0)	11.1 (4.8)	21.7 (9.4)	37.5 (16.2)	59.5 (25.7)	88.9 (38.4)	173.6 (75.0)	300.0 (129.6)	476.4 205.8	711.1 (307.2)	1012.5 (600.0)
400 (6,400)	1.9 (0.8)	6.3 (2.7)	14.8 (6.4)	28.9 (12.5)	50.0 (21.6)	79.4 (34.3)	118.5 (51.2)	231.5 (100.0)	400.0 (172.8)	635.2 (274.4)	948.1 (409.6)	1350.0 (800.0)
500 (8,000)	2.3 (1.0)	7.8 (3.4)	18.5 (8.0)	36.2 (15.6)	62.5 (27.0)	99.2 (42.9)	148.1 (64.0)	289.4 (125.0)	500.0 (216.0)	794.0 (343.0)	1185.2 (512.0)	1687.5 (1000.0)
600 (9,600)	2.8 (1.2)	9.4 (4.1)	22.2 (9.6)	43.4 (18.8)	75.0 (32.4)	119.1 (51.5)	177.8 (76.8)	347.2 (150.0)	600.0 (259.2)	952.8 (411.6)	1422.2 (614.4)	2025.0 (1200.0)

Table 7.33
Approximate lump weight in lbf (kgf)

www.CEMATRIX.org has licensed this document (1400) to Apr 24, 2017 to Pattarapom, Sirikul, Suanluang, , Thailand

CONVEYOR BELT SELECTION

The values in tables 7.39-7.45 are typical values. Always consult a CEMA Member belt manufacturer for specific application recommendations and belt specifications. It is virtually impossible to determine every conveyor design in a simple table. Often wider belts can be used for a given trough angle, however, full application details should be provided to the belt manufacturer for recommendations.

Tension Ratings

The tension rating for a belt is the recommended maximum safe working stress that should be applied to the belt.

Belt tension is commonly referred to as the force applied to the belt per unit of belt width, such as pounds per inch width, or kilo Newtons per meter width. Textile fabrics are frequently rated for their maximum safe working stress, which is expressed as the force applied per ply of fabric per unit width of the belt.

Information follows on multi- or reduced-ply, single-, and double-ply straight warp rubber belting tension ratings and also on PVC solid woven belting. This information is for illustrative purposes only.

There is no similarity among manufacturers about the information that relates the number of plies of fabric, belt carcass thickness, minimum pulley diameter, troughability, etc. to the belt maximum safe working stress. These tables are presented to indicate the general availability of products.

Dissimilarities exist among manufacturers in:

- The fiber, polyester and/or nylon, used for the fabric.
- Recommended safe working strength for the fabric used.
- Ratio of belt breaking strength to belt maximum safe working stress.

These factors, of course, affect the belt carcass thickness, belt weight, minimum pulley diameter, troughability, load support with different angle idlers, transition distance, impact resistance, etc. Thus, it is essential to confer with the belt manufacturer about the belt proposed for each application.

Because there is a wide variety of textile fibers, fabrics, and steel cords from which to choose, the belt manufacturer should be consulted for a recommendation of the type of belt carcass and tension rating of the belt that will best meet the user's needs.

Safety Factors

A belt's safety factor is the ratio of the belt's strength to its maximum operating tension. Traditionally, the safety fabric for fabric belts is 10:1, that is, the belt runs at 10% of its breaking strength. Traditionally, the safety factor for steel cord belts has been 6.67:1, that is, the belt runs at 15% of its breaking strength. Belt safety factors are normally determined by the efficiency of the splice and its operating conditions. The Dynamic Splice Efficiency of a belt splice is currently defined by DIN 22110 Part 3. In this test standard, a narrow test loop is made, typically 12" (305 mm) to 18" (457 mm), from the belt and spliced using the same splice design to be used in service. In the test, the Dynamic Splice Efficiency is determined from the minimum peak test load that will achieve 10,000 load cycles on the two-pulley test which is defined in the standard. The value of the minimum peak test load is commonly expressed as a percentage of nominal belt break (also called the Relative Reference Fatigue Strength of the splice).

Safety factors are used to ensure the belt will remain functional under normal service conditions. Normal service conditions include a proven splice design, normal splice preparation, the use of recommended

WWCEMA Order No. Issued to: 4600 on Jan 24, 2011 per License Agreement. No further reproduction allowed.

pulley diameters, moderate starting and stopping tensions, normal conveyor alignment, normal maintenance, and allowances for rubber degradation with time, etc. In certain cases lower safety factors may be considered where improved conditions exist, such as, improved splice design efficiency, improved spice preparation techniques, smooth low tension starts and stops, good conveyor alignment, good maintenance practices and a preventive belt maintenance program. Predictive belt maintenance of steel cord belts can be significantly enhanced with the use of continuous electronic belt monitoring systems. The most common cause of belt failure is accidental belt damage. This may occur from accidental events such as tramp material entering the material flow stream which gets caught on structure and then penetrates the belt. Belt damage can also occur from pulley lagging or bearing failures, severe material impact, and from generally severe service conditions resulting from poor maintenance practices. Accidental belt damage is, by its nature, a random event and the frequency of occurrence is unpredictable. For this reason belt warranties covering accidental damage are not normally given. Higher safety factors reduce risk by increasing the margin of safety available to absorb accidental damage or increased service demands. Safety factors of 10:1 and 12:1 have been used in extreme cases of belts in high abuse applications. Lower safety factors increase risk by reducing the margin of safety available to absorb accidental damage or increased service demands. Safety factors of 5.5:1 or lower are becoming more prevalent for long overland conveyors.

The safety factor chosen by the system engineer for a given conveyor belt is a risk decision that will depend on many factors. Those will include considerations such as:

- How critical the belt is to the operation,
- Effect of additional belt tensions introduced during stopping and starting,
- The effect of transitions and vertical curve geometry on tension distribution within the belt,
- The amount of lift (stored potential energy) and whether operation is within a confined space such as a tunnel where operator escape from rouge material is limited.
- Pulley diameters that will impact the belt's flex fatigue life,
- Dynamic splice efficiency of the belt,
- The type, bulk density and size of material being transported and its potential for belt damage.
- The chute design and its effect on the potential for the material to damage the belt,
- The potential for tramp material to enter the material flow stream and damage the belt, structure, idler and belt maintenance practices,and the associated risks of belt damage
- Estimated effect of rubber aging deterioration, etc..

Most typically, serious belt issues occur after the belt has been weakened by accidental damage that is not repaired quickly. The introduction of real-time cord monitoring and rip detection systems that quickly alert the operator to critical accidental belt damage significantly reduce the risk of a catastrophic event.

Belt Monitoring Systems

Conveyor belts are a critical component of many mining and processing operations. The loss of a conveyor belt on a critical conveyor line will result in significant downtime and cost the operation significantly due to lost productivity. There are a number of methods that can be utilized by operations to monitor their belt in order to maximize the belts productivity.

Operation monitoring sensors continually monitor the interaction between the material being conveyed, the conveyor belt and the conveyor system in order to detect situations that are considered to be out of the normal operating conditions. Included in these sensors are belt slip sensors, belt tracking or misalignment sensors, plugged chute sensors and metal detectors, to name a few. By monitoring the operation for potentially catastrophic events it is possible to minimize or avoid damage to the conveyor belt that would result in prolong downtime of the mining operation.

www.conveyorbeltguide.com (Jacobs Aug 4 2015 Patzaplans Stocked Spreadsheet)

Operation-Based Sensors

Slip Sensors

Slip Sensors monitor for belts running on a frozen pulley or a pulley driving a belt that is not moving. In either case, this type of event will result is a large amount of heat from frictional forces between the pulley and the belt that can result in fire and potentially a broken belt. The slip sensors monitor the rotation of two different pulleys on the system and compare the speed differential between the two pulleys. This is typically accomplished using encoders or proximity sensors mounted on two different pulleys, normally a drive and a separate non-drive pulley. Assuming the system is functioning properly, the speed of the belt should be the same in both locations.

Alignment Switches

Alignment Switches are used to measure when a belt tracks off of the conveyor structure. These are used to trigger a belt stop when the belt pushes a bar attached to a limit switch beyond the limit setting for that switch. Belt tracking could also be tracked by an ultrasonic sensor; however, the fail safe characteristics of the alignment switches are the most common methodology implemented in mines.

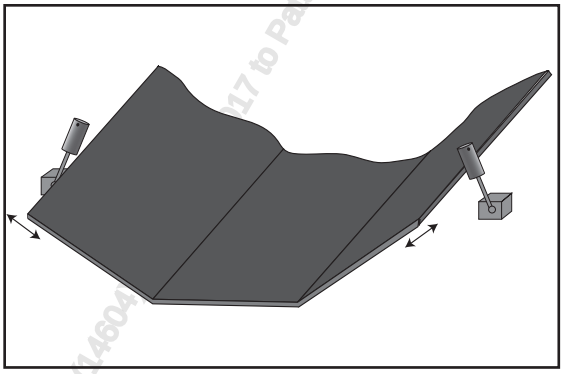

Figure 7.34
Misalignment switch mounted near edge of conveyor belt

Plugged Chute Switches

Plugged Chute switches are used to shut the belt down if the chute becomes blocked and the load is not being carried through the process as expected. Chute switches operate under a number of different sensor types including microwave, radio-frequency type capacitance probes, ultrasonic, radar, nuclear, and laser technologies. All of these sensors are interacting in some way with the material in order to detect its presence in the chute structure when the chute is filling up due to a chute blockage.

Infrared Technology

Infrared Technology in the form of spot, line and camera sensors are often used in the coal industry to monitor the temperature of the material being carried; however, in some cases, IR cameras are also being used as a means to detect heat build in pulleys or idler rolls.

Metal Detectors

Metal Detectors are often utilized to detect metal debris on the belt that may result in belt damage or a longitudinal rip. If a large enough piece of metallic debris is detected, the unit will shut the conveyor down to enable operations to remove the metal. In high risk areas, mines will implement electromagnets to remove as much of this metallic debris as possible out of the material being conveyed before it causes damage.

WWW.CMMNET.ORG Retrieved by Document (14604) on 2017 to Pattaraporn Srirakool, Suranaree University of Technology

Speed Monitors

Speed Monitors are used to monitor the belt speed in order to ensure the belt drives are controlling the belt speed properly. Speed sensors can either be encoders that make physical contact with pulley or a non-contact proximity sensor that detects a target system mounted to the pulley (Figure 7.35). In either case, the revolution of the pulley is converted to a belt speed and this speed is used to verify that the conveyor is functioning properly.

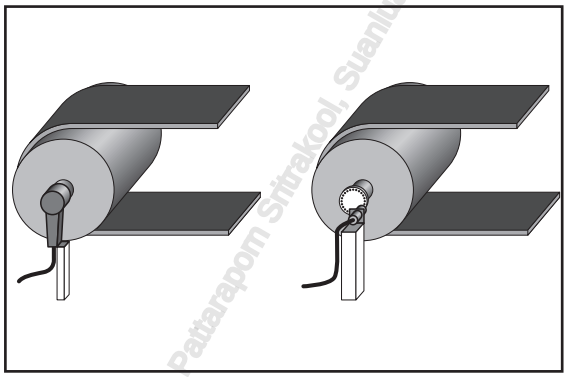

Figure 7.35
Encoder and proximity sensor speed sensors

Counter Weight Limit Switches

Counter Weight Switches are set up on the system to monitor the position of the counter weight on the take-up system. If the counter weight goes to the low or high tension ends of the take-up, it is an indication that the tensions are too low or are exceeding the upper limit of the design. A limit switch on the counter weight will be set such that if the take-up pulley exceeds its displacement range trying to fully tension the belt, it is an indication that there is not enough tension on the system. In some cases this is one of the first indicators of a transverse belt tear having occurred on the system. Alternatively, if the belt tension forces the take-up pulley to the higher tension end of the displacement range, a limit switch on the upper limit of the displacement range will be activated resulting in a system alarm.

Rip Detection

Rip Detection can be achieved by several methodologies from those that monitor material spillage or belt tracking to those that involve interaction with embedded components within the conveyor belt.

Material Spillage Detection

Material Spillage Detection is utilized by a number of sensor systems to detect longitudinal belt rips. As the event progresses, material will spill from the belt at the event. There are several manufacturers that offer pull cord devices that detect material spillage as it falls on the conveyor or is pulled along the return conveyor. These pull cord systems require wires to be strategically placed transverse to the conveyor belts direction of travel. When material falling through the ripped conveyor belt strikes the pull cord, a relay is tripped in the device that indicates an issue has been detected in that area. Ultrasonic and laser based sensors have also been utilized in a similar fashion to detect material dropping from the belt indicating a rip is taking place. In this case, an ultrasonic or laser beam field is disturbed and the sensor alarms.

Belt Width Monitoring

In some systems, the width of the belt can be utilized as a means of detecting longitudinal rips. If an edge

www.CEMAFLEX.com has licensed this document to [illegible] on [illegible], 2017 to Patcharapom Sritrakool, Suanlueng, , Thailand

strip is taken from the edge of the belt or the belt overlaps in a center rip situation, the measurable width of the belt will be reduced and the system will alarm. Similarly, if there is an expansion of the width of the belt, the belt width monitoring systems can detect that change and stop the belt.

Inductive Rip Detection

Induction Rip Detection has been around since the 1970's. The principle of an inductive system is to place metallic loop antennas across the width of the belt at regular intervals along the belts length. A transmitter is used to induce electrical currents in these antennas that are then detected with a receiver as the loop passes. If the loop is good, the induced current is detected by the Receiver and a signal is sent to a control unit indicating the loop is good. A damage loop will not carry an induced current and will not be detected by the receiver. These systems normally utilizes the time between loops or the distance between loops to monitor the loops in the passing conveyor belt. If the expected time or distance between loops is exceeded due to a loop being damaged by a longitudinal rip, the system will alarm by opening a relay to stop the belt.

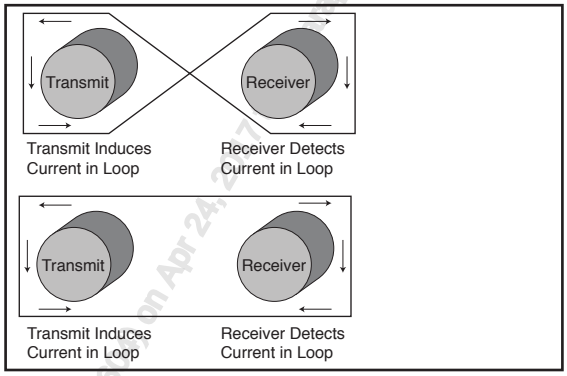

Figure 7.36
Transmit and receive detector monitor loop integrity

Magnetic-based Rip Protection

The most recent advance in longitudinal rip detection is the magnetic based rip detection technology. Like the inductive systems, the magnetic systems utilize sensors that are installed at regular intervals along the length of the belt. The magnetic insert are composed of transverse or biased wires that cover the width of the belt. After magnetizing these inserts, the integrity of the inserts are monitored using magnetic sensor arrays and the previous record of the rip insert. Unlike the inductive loops, the magnetic insert can sustain some damage without significant effect to its magnetic signature. As a result it is considered to be more durable.

WWW.CEMANET.ORG Provided by IHS Markit under license with CEMA Document #4648 on Apr 24, 2017 Thanapom Chaiyo Systems, , Thailand

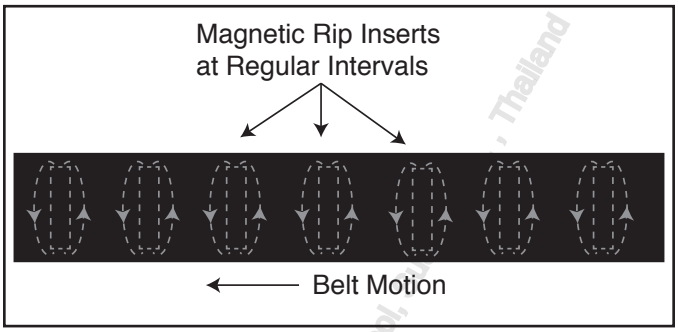

Figure 7.37
Magnetic rip Inserts at regular intervals (application dependent)

Periodic and Continuous Conveyor Belt Health Measurements

Conveyor Cover Wear

One of the measures of the remaining life of a conveyor belt is how much of the belts top or "carry" cover is remaining. Knowing the wear rate and the amount of cover left, a mine can determine how much more life to expect out of the conveyor belt that is otherwise in good shape. Based on the loss of material between measurements at two different times, one can calculate the wear rate to see if there has been a change in wear rate and/or to predict the expected life remaining for that conveyor belt.

Ultrasonic Wear Measurements

Periodic measurements using ultrasonic gauges are commonly used by site surveyors to assess how much cover wear has taken place on textile conveyor belts and steel cord belting. The ultrasonic measurement determines the gauge of rubber above the carcass by transmitting the ultrasonic wave through the material to the carcass and measuring the reflected wave to determine the gauge of the rubber cover. In fabric belts, the ultrasonic wave reflection is mainly from the first layer of fabric and these reflected waves are then detected by the ultrasonic sensor to determine the cover gauge of the belt. Similarly for steel cord belts, the ultrasonic waves will reflect off of the steel cables. It should be noted that for the best results, it is important to know the properties of the rubber you are measuring as the transmission of the ultrasonic waves through different rubber compounds will yield slightly different results.

Eddy Current Wear Measurements

Similarly, periodic measurements using eddy current-based sensors can also be used on steel cord belts to measure the cover gauge. The eddy current sensor emits a high-frequency alternating-current magnetic signal. When the sensor is moved towards a conductive surface, eddy currents are generated on the surface of that conductor. The magnitude of the eddy current signal detected is dependent on the conductive properties of the steel cord and the separation of the steel cord and the sensor surface. Given that the conductive properties of the steel cord are known, the gauge of the rubber can be determined in order to give a measure of the remaining rubber gauge on the conveyor belt.

Laser Wear Measurements

More recently, laser based scans have been used to accurately determine the thickness profile of the conveyor belt by measuring its thickness across the width of the conveyor belt. In essence this is done by using lasers positioned above and below the conveyor belt and doing a differential measurement to determine the overall gauge of the conveyor belt. This type of measurement is capable of giving very accurate information about the belt thickness belt; however, one must be careful that the belt is clean and

www.CEMATERIAL.com Scanned Using Medium Quality (4400) on Apr 24, 2015 by Veerapon Sirakoul, [illegible], Thailand

that pulley cover wear is not contributing to the gauge variation of the belt.

Conveyor Belt Integrity

Conveyor belt integrity is often determined from conveyor belt scans. Many mine sites will have diagnostic scans of their conveyor belts completed on a regular basis in order to evaluate their potential risk of a transverse tear or splice failure.

X-Ray Based Belt Scanning

For many years, X-Ray scanning of conveyor belting has been utilized to determine the integrity of the conveyor belt carcass in fabric or steel cord belting. These scans are typically done periodically and require radiation restrictions to be applied where the scans are performed. During an X-Ray scan, the X-Rays penetrate the belt and are measured on the opposite side of the conveyor belting. The integrity of the material reinforcement in the belt is measured as a function of the intensity of the X-Ray image. The X-Ray image intensity will vary with variations in density of the internal components of the conveyor belt. As a result, damage to the fabric reinforcement or the steel cord reinforcements can be detected due to the density changes associated with these damage points.

Magnetic-Based Belt Scanning

Magnetic Scans of steel cord conveyor belts have become one of the most popular methods of scanning steel cord conveyor belts to determine the integrity of the steel cords running longitudinally. The majority of the systems rely on a permanent magnet mounting that magnetizes the cords in the conveyor belt as it passes over or under the magnet. Once magnetized, a single steel cord will have a north polarity on one end and a south polarity on the opposite end. The magnetic flux lines that are emitted from these cord ends will be more perpendicular to the belt surface and hence magnetically distinct from the magnetic field of the rest of the belt. These distinct magnetic flux lines can be detected using inductive coils or solid state sensor technologies, both of which generate voltages proportional to the magnetic field strength in the region of the cord ends. With this technology, it is possible to map any cord damages that occur along any given length of belt. The fact that this sensor technology is not restrictive and can be used to monitor the conveyor belt continuously, these sensors are starting to find their way into the mainline sensor arsenal of mines. The ability to detect and minimize the risk of a transverse tear event and the ability to detect longitudinal rips is expected to become a standard in steel cord conveyor belt monitoring.

Splice Monitoring

Splice monitoring in textile belts has always been a challenge. Historically, the two most common systems for splice monitoring in textile belting utilize optical or magnetic markers near the edges of the splice. By comparing subsequent images of the splice to a baseline image, the quality of the splice can be determined. Primarily, the analysis is looking at splice deformation compared to the baseline image in the form of de-linearization of the splice along designed construction lines and/or the elongation of the overall splice length.

X-Ray Based Splice Scanning

Periodic X-Ray scanning of textile and steel cord splices has also been a method of checking the integrity of the conveyor belt splices. Like in the conveyor belt, damage to the fabric or steel cords will be visible as density changes in the belt. Variation in splice lengths and deformations can also be determined by analyzing the X-ray images and comparing them to a benchmark image of the belt.

WARNING: Only the Original Purchaser May Print or Download from the Internet for Personal Use. Sharing or Distribution Prohibited. Copyright Apr 24 2017 to Patcharaporn Chaiyasuen, Suanluang, , Thailand

Magnetic Based Splice Scanning

Steel cord splice monitoring has historically been done as part of the belt analysis on a periodic basis. Once a magnetic scan was completed the magnetic signal is reviewed for evidence of change or degradation of the magnetic intensities. In some cases, once a magnetic anomaly has been identified X-Ray images are completed to verify the magnetic results. This type of analysis has been automated more recently in order to continually monitor changes to a splice over time and to alarm if the splice quality is degrading.

Note:
For the best combination of conveyor belt design and applicable sensor systems for a given application, it is recommended that a CEMA Member belt manufacturer be consulted.

Pulley Face

A crowned face is effective in centering a belt on the pulley if the approach to the pulley is an unsupported span that is unaffected by the steering action of idlers. Consequently, for troughed belts the crown on the head pulley of a conveyor is of little value in training the belt. Some benefit may be realized in terms of centering the belt through a tripper by having a crowned face on the tripper discharge pulley. Crowned face on low-tension bend pulleys in the return run and on a tail pulley where there is a relatively long unsupported span between return idler and the pulley may be slightly beneficial in centering the belt, but the contribution to overall training is minor.

Crowned-face pulleys should never be used for any pulleys on conveyors using steel-cable belt. Multiple-ply belts should not be used on a crowned-face pulley where the tension will exceed 76 pounds per inch per ply. However, for all belts with textile carcasses, the best recommendation is that crowned pulleys be limited to locations where the belt will only be subjected to less than 40 percent of its rated tension.

Only straight-face pulleys should be used for all two-pulley drives and for drive snub pulleys.

The recommendations for the face width of belt conveyor pulleys are shown in Table 7.38. Return belt clearances are also indicated.

Conveyor Belt Width BW in (mm)	Pulley face Width P_f in (mm)	Distance Between Discharge Chute Side Plates/Walls in (mm)	Minimum Return Belt Clearance* Each Side in (mm)
42 and under (1066 and under)	BW + 2.0 (BW + 50)	P_f + 3.0 (P_f + 75)	2.5 (63)
Over 42 (Over 1066)	BW + 3.0 (BW + 75)	P_f + 4 (P_f + 100)	3.0 (75)
*It may be desirable on conveyors with 500-foot (150 m) centers and longer, for greater belt edge protection, that the next wider standard pulley face be used over that shown in the above table. For these conveyors, the stringers to carry the idlers should be spaced wider, allowing a return belt clearance of 5 or 6 inches (125 or 150 mm) or more, each side. This will result in increased cost of stringers, idler frames, and chutes, but often is considered worthwhile in reducing belt edge damage.			

Table 7.38
Recommended pulley face widths, belt path and chute clearances.

WWW.CEMANET.ORG has issued this document (1465470) on Apr 24, 2017 to Prapaporn Sritrakool, Suanluang, Thailand

Service Conditions

The data in the Belt Selection Tables apply if the following service conditions occur:

Mechanical Fastener Spliced

- Pulley diameters recommended by the belt manufacturer and fastener manufacturer are used.
- No abnormal conditions, such as heat or chemicals, are applied to the belt that will reduce the belt fabric strength or change the flexibility of the belt fabric.
- Recommended fasteners are properly applied.
- Across the line, starting tension is limited to no more than 150 percent of the splice rating. Step phase or soft starting is preferred.

Vulcanized Spliced

- Pulley diameters recommended by the belt manufacturer are used.
- Automatic take-up with adequate take-up travel is used.
- Splices are made strictly in accordance with the belt manufacturer's specifications.

Where an adverse environmental condition or some special belt application exists, it is critical that the belt fabric ply tension rating be reduced by some factor recommended by the belt manufacturer. Some of the special conditions are:

- Continuous excessive ambient temperature.
- Exposure to deleterious chemicals.

ELEVATOR BELT TENSION RECOMMENDATIONS

Elevator tension ratings may require modification under certain adverse environmental conditions. In such cases the rating in the following tables should be multiplied by an environmental factor of 0.75. Adverse environmental factors for elevator belts include:

- Elevated temperatures in the belt reinforcing fabric due either to high ambient temperatures or to conveying hot materials.
- Abrasion of surface plies which are not protected by an elastomeric cover, such as friction surface belting in abrasive service.
- Chemical service detrimental to the carcass fiber.

CAUTION:

There is a difference in conventions regarding ultimate and operating or working strengths of conveyor belting. This is particularly true between fabric and steel cable belt ratings. Convention is that a "PIW" rating, in units of lbf/in, usually represents the operating tensile strength and not the ultimate tensile strength of a fabric belt. A "ST" rating, in units of kN/m, usually represents the ultimate tensile strength of a steel cable belt and not the operating tensile strength. When values are converted between unit systems or in discussions of belt safety factors, statements of belt strength must be considered in context.

www.CHAINTECH has issued this document (145) on Apr 04, 2017 to Patsajam Sritrakool, Suanfang, Thailand

BELT SELECTION TABLES

Working Strength (PIW)	220	250	330	375	440	500	600	750	800	1000	1000	1200	1250
Number of plies	2	2	3	3	4	4	3	3	4	4	5	6	5
Approx. Carcass gauge (in)	0.120	0.144	0.162	0.199	0.205	0.248	0.258	0.273	0.354	0.374	0.450	0.546	0.475
Approx. Carcass weight (lbf/ft^2)	0.70	0.80	0.90	1.10	1.20	1.40	1.45	1.50	1.99	2.10	2.50	3.10	2.65
*Fabric Type (length/width)	P/N	N/N	P/N	N/N	P/N	N/N	P/N	P/N	P/N	P/N	P/N	P/N	P/N
Approx. Modulus (PIW × 1,000)	20	18	30	27	40	36	51	55	68	76	82	100	92
% of Max. Rated Belt Tension	**Minimum Pulley Diameter (in)**												
81 - 100%	16	16	18	18	24	24	24	30	30	36	36	42	42
61-80%	14	14	16	16	20	20	20	24	24	30	30	36	36
41-60%	10	12	12	14	16	18	18	20	20	24	24	30	30
To 40%	10	10	12	12	16	16	16	18	18	20	20	30	24
TROUGHABILITY													
Idler Trough Angle	**Maximum Belt Width for Empty Troughing (in)**												
20 °	18	18	18	24	24	30	24	24	30	30	36	42	36
35 °	18	24	24	30	30	36	30	30	36	36	42	48	42
45 °	24	30	30	36	36	42	36	36	42	42	48	54	48
Load Support													
Idler Trough Angle / Material Weight (lbf/ft^3)	**Maximum Belt Width for Empty Troughing (in)**												
20 ° 0-40	48	54	60	72	72	84	84	84	96	96	108	116	116
20 ° 41-80	48	48	60	60	72	72	72	72	84	84	96	108	108
20 ° 81-120	42	42	54	54	60	72	72	72	84	84	96	108	108
20 ° Over 120	36	36	48	48	60	60	60	60	72	72	84	96	96
35 ° 0-40	42	48	54	60	60	72	72	72	84	84	96	108	108
35 ° 41-80	36	42	48	60	54	60	60	60	72	72	84	96	96
35 ° 81-120	36	42	48	54	54	60	60	60	72	72	84	96	96
35 ° Over 120	30	30	42	42	48	54	54	54	60	60	72	84	84
45 ° 0-40	36	48	48	60	54	72	72	72	84	84	96	108	108
45 ° 41-80	36	36	42	48	48	54	54	54	72	72	84	96	96
45 ° 81-120	30	30	42	48	48	54	54	54	60	60	72	84	84
45 ° Over 120	NR	NR	36	36	42	48	48	48	54	54	72	84	78
ELEVATOR													
% of Max. Rated Belt Tension	**Minimum Pulley Diameter (in)**												
81 - 100 %	18	18	22	22	30	30	30	30	36	36	42	48	48
61 TO 80%	16	16	20	20	24	24	24	24	30	30	36	42	42
UP TO 60%	14	14	18	18	20	20	20	20	24	24	30	36	36
	Maximum Bucket Projection (in)												
SPACED INDUSTRIAL (100 lbf/ft^3)	7	7	9	9	10	10	10	10	11	12	12	12	12
SPACED CONTINUOUS	6	6	8	8	11	11	12	12	14	15	16	20	20
* P = Polyester N =Nylon													

www.SMANET.ORG has licensed this document (1/1/00) on Apr 24, 2007 to Pataraporn Sitakorn, Student, Thailand

Table 7.39

Typical ratings for multi-ply conveyor/elevator rubber belting (imperial units)

Working Strength (kN/m)	39	44	58	66	77	88	105	131	140	175	175	210	219
Number of plies	2	2	3	3	4	4	3	3	4	4	5	6	5
Approx. Carcass gauge (mm)	3.0	3.7	4.1	5.1	5.2	6.3	6.6	6.9	9.0	9.5	11.4	13.9	12.1
Approx. Carcass weight (kgf/m^2)	3.4	3.9	4.4	5.4	5.9	6.8	7.1	7.3	9.7	10.3	12.2	15.1	13.0
*Fabric Type (length/width)	P/N	N/N	P/N	N/N	P/N	N/N	P/N	P/N	P/N	P/N	P/N	P/N	P/N
Approx. Modulus (kN/mm)	3.5	3.2	5.3	4.7	7.0	6.3	8.9	9.6	11.9	13.3	14.4	17.5	16.1
% of Max. Rated Belt Tension	**Minimum Pulley Diameter (mm)**												
81 - 100%	406	406	457	457	610	610	610	762	762	914	914	1067	1067
61-80%	356	356	406	406	508	508	508	610	610	762	762	914	914
41-60%	254	305	305	356	406	457	457	508	508	610	610	762	762
To 40%	254	254	305	305	406	406	406	457	457	508	508	762	610
Troughability													
Idler Trough Angle	**Maximum Belt Width for Empty Troughing (mm)**												
20 °	457	457	457	610	610	762	610	610	762	762	914	1067	914
35 °	457	610	610	762	762	914	762	762	914	914	1067	1219	1067
45 °	610	762	762	914	914	1067	914	914	1067	1067	1219	1372	1219
Load Support													
Idler Trough Angle / Material Weight (kgf/m^3)	**Maximum Belt Width for Empty Troughing (mm)**												
20 ° 0-640	1219	1372	1524	1829	1829	2134	2134	2134	2438	2438	2743	2946	2946
20 ° 657-1281	1219	1219	1524	1524	1829	1829	1829	1829	2134	2134	2438	2743	2743
20 ° 1297-1922	1067	1067	1372	1372	1524	1829	1829	1829	2134	2134	2438	2743	2743
20 ° Over 1922	914	914	1219	1219	1524	1524	1524	1524	1829	1829	2134	2438	2438
35 ° 0-640	1067	1219	1372	1524	1524	1829	1829	1829	2134	2134	2438	2743	2743
35 ° 657-1281	914	1067	1219	1524	1372	1524	1524	1524	1829	1829	2134	2438	2438
35 ° 1297-1922	914	1067	1219	1372	1372	1524	1524	1524	1829	1829	2134	2438	2438
35 ° Over 1922	762	762	1067	1067	1219	1372	1372	1372	1524	1524	1829	2134	2134
45 ° 0-640	914	1219	1219	1524	1372	1829	1829	1829	2134	2134	2438	2743	2743
45 ° 657-1281	914	914	1067	1219	1219	1372	1372	1372	1829	1829	2134	2438	2438
45 ° 1297-1922	762	762	1067	1219	1219	1372	1372	1372	1524	1524	1829	2134	2134
45 ° Over 1922	NR	NR	914	914	1067	1219	1219	1219	1372	1372	1829	2134	1981
ELEVATOR													
% of Max. Rated Belt Tension	**Minimum Pulley Diameter (mm)**												
81 - 100 %	457	457	559	559	762	762	762	762	914	914	1067	1219	1219
61 TO 80%	406	406	508	508	610	610	610	610	762	762	914	1067	1067
UP TO 60%	356	356	457	457	508	508	508	508	610	610	762	914	914
	Maximum Bucket Projection (mm)												
SPACED INDUSTRIAL (1600 kgf/m^3)	178	178	229	229	254	254	254	254	279	305	305	305	305
SPACED CONTINUOUS	152	152	203	203	279	279	305	305	356	381	406	508	508
* P = Polyester N =Nylon													

Table 7.40
Typical ratings for multi-ply conveyor/elevator rubber belting (metric unit conversion of Table 7.39)

Working Strength (PIW)	220	330	440	550	600	660	800	800	900	1000	1250	1350	1500	1800
Number of plies	1	1	1	2	3	2	2	3	2	2	2	3	2	4
Approx. Carcass gauge (in)	.103	.131	.165	.234	.258	.250	.281	.313	.314	.320	.328	.490	.359	.636
Approx. Carcass weight (lbf/ft²)	0.49	0.72	0.78	0.84	1.39	1.38	1.50	1.71	2.90	1.68	1.92	2.66	2.10	3.55
*Fabric Type (length/width)	S	S	S	S	T	S	S	T	D	S	S	D	S	D
Approx. Modulus (PIW × 1,000)	25	30	45	46	55	59	60	70	60	78	82	90	85	120
% of Max. Rated Belt Tension	**Minimum Pulley Diameter (in)**													
81 - 100%	16	20	24	18	24	30	36	30	36	42	42	42	42	48
61-80%	14	18	20	16	20	24	30	24	30	36	36	36	36	42
41-60%	12	16	18	12	18	20	24	20	24	30	30	36	30	42
To 40%	12	16	18	12	16	20	24	18	20	30	30	30	30	36
TROUGHABILITY														
Idler Trough Angle	**Maximum Belt Width for Empty Troughing (in)**													
20 °	14	18	18	18	30	24	30	30	24	30	30	30	30	36
35 °	20	24	24	24	36	30	36	36	30	36	36	36	36	42
45 °	24	24	24	30	42	36	42	42	36	42	42	42	42	48
LOAD SUPPORT														
Idler Trough Angle / Material Weight (lbf/ft³)	**Maximum Belt Width for Empty Troughing (in)**													
20 ° / 0-40	42	60	66	60	96	84	84	96	78	84	84	96	84	118
20 ° / 41-80	42	60	66	60	84	84	84	84	72	84	84	96	84	118
20 ° / 81-120	36	48	54	54	84	84	84	84	72	84	84	96	84	108
20 ° / Over 120	36	48	54	48	72	84	84	72	60	84	84	96	84	108
35 ° / 0-40	36	54	60	54	84	84	84	84	78	84	84	96	84	118
35 ° / 41-80	36	54	60	48	72	84	84	72	72	84	84	96	84	118
35 ° / 81-120	30	42	48	48	72	84	84	72	60	84	84	84	84	108
35 ° / Over 120	30	42	48	42	60	66	84	60	54	84	84	84	84	96
45 ° / 0-40	36	48	54	48	84	84	84	84	72	84	84	84	84	108
45 ° / 41-80	36	48	54	42	72	84	84	72	60	84	84	84	84	108
45 ° / 81-120	30	42	48	42	60	84	84	60	54	84	84	72	84	96
45 ° / Over 120	24	36	42	36	54	60	66	54	48	84	84	72	84	84
ELEVATOR														
% of Max. Rated Belt Tension	**Minimum Elevator Pulley Diameter (in)**													
81 - 100 %	16	20	24	22	30	30	36	36	30	42	42	48	42	54
61 TO 80%	14	18	20	20	24	24	30	30	24	36	36	42	36	48
UP TO 60%	12	16	18	18	20	20	24	24	20	30	30	36	30	42
	Maximum Bucket Projection (in)													
SPACED INDUSTRIAL (100 lbf/ft³)	7	9	9	9	10	13	13	11	10	14	15	13	16	15
SPACED CONTINUOUS	7	9	9	8	12	13	13	14	12	14	15	22	16	26
* S = Straight warp, T = Triple warp, D = Twill weave														

www.CHANET.ir Access is ... this document (USA) on May 24, 2017 for personal ... Shared Services, Thailand

Table 7.41
Typical ratings for reduced ply or higher tension conveyor/elevator rubber belting (imperial units)

Working Strength (kN/m)	38.5	57.8	77.1	96.3	105.1	115.6	140.1	140.1	157.6	175.1	218.9	236.4	262.7	315.2
Number of plies	1	1	1	2	3	2	2	3	2	2	2	3	2	4
Approx. Carcass gauge (mm)	2.6	3.3	4.2	5.9	6.6	6.4	7.1	8.0	8.0	8.1	8.3	12.4	9.1	16.2
Approx. Carcass weight (kgf/m^2)	2.4	3.5	3.8	4.1	6.8	6.7	7.3	8.4	14.2	8.2	9.4	13.0	10.3	17.3
*Fabric Type (length/width)	S	S	S	S	T	S	S	T	D	S	S	D	S	D
Approx. Modulus (kN/mm)	4.4	5.3	7.9	8.1	9.6	10.3	10.5	12.3	10.5	13.7	14.4	15.8	14.9	21.0
% of Max. Rated Belt Tension	**Minimum Pulley Diameter (mm)**													
81 - 100%	406	508	610	457	610	762	914	762	914	1067	1067	1067	1067	1219
61-80%	356	457	508	406	508	610	762	610	762	914	914	914	914	1067
41-60%	305	406	457	305	457	508	610	508	610	762	762	914	762	1067
To 40%	305	406	457	305	406	508	610	457	508	762	762	762	762	914
TROUGHABILITY														
Idler Trough Angle	**Maximum Belt Width for Empty Troughing (mm)**													
20 °	356	457	457	457	762	610	762	762	610	762	762	762	762	914
35 °	508	610	610	610	914	762	914	914	762	914	914	914	914	1067
45 °	610	610	610	762	1067	914	1067	1067	914	1067	1067	1067	1067	1219
LOAD SUPPORT														
Idler Trough Angle	Material Weight (kgf/m^3)	**Maximum Belt Width for Empty Troughing (mm)**												
20 °	0-640	1067	1524	1676	1524	2438	2134	2134	2438	1981	2134	2134	2438	2134	2997
	657-1281	1067	1524	1676	1524	2134	2134	2134	2134	1829	2134	2134	2438	2134	2997
	1297-1922	914	1219	1372	1372	2134	2134	2134	2134	1829	2134	2134	2438	2134	2743
	Over 1922	914	1219	1372	1219	1829	2134	2134	1829	1524	2134	2134	2438	2134	2743
35 °	0-640	914	1372	1524	1372	2134	2134	2134	2134	1981	2134	2134	2438	2134	2997
	657-1281	914	1372	1524	1219	1829	2134	2134	1829	1829	2134	2134	2438	2134	2997
	1297-1922	762	1067	1219	1219	1829	2134	2134	1829	1524	2134	2134	2134	2134	2743
	Over 1922	762	1067	1219	1067	1524	1676	2134	1524	1372	2134	2134	2134	2134	2438
45 °	0-640	914	1219	1372	1219	2134	2134	2134	2134	1829	2134	2134	2134	2134	2743
	657-1281	914	1219	1372	1067	1829	2134	2134	1829	1524	2134	2134	2134	2134	2743
	1297-1922	762	1067	1219	1067	1524	2134	2134	1524	1372	2134	2134	1829	2134	2438
	Over 1922	610	914	1067	914	1372	1524	1676	1372	1219	2134	2134	1829	2134	2134
ELEVATOR														
% of Max. Rated Belt Tension	**Minimum Pulley Diameter (mm)**													
81 - 100 %	406	508	610	559	762	762	914	914	762	1067	1067	1219	1067	1372
61 TO 80%	356	457	508	508	610	610	762	762	610	914	914	1067	914	1219
UP TO 60%	305	406	457	457	508	508	610	610	508	762	762	914	762	1067
	Maximum Bucket Projection (mm)													
SPACED INDUSTRIAL (100 lbf/ft^3)	178	229	229	229	254	330	330	279	254	356	381	330	406	381
SPACED CONTINUOUS	178	229	229	203	305	330	330	356	305	356	381	559	406	660
* S = Straight warp, T = Triple warp, D = Twill weave														

WWW.CEMA-ONLINE.ORG is the property of CEMA (Conveyor Equipment Manufacturers Association) and is for the sole use of the purchaser (Stanley Pinegar) downloaded on 2017-10-24. Limited reproduction permitted for purposes of research, education or evaluation in non-commercial activities. Unauthorized reproduction and/or distribution is a violation of the terms of use.

Table 7.42
Typical ratings for reduced ply or higher tension conveyor/elevator rubber belting (metric unit conversion of Table 7.41)

Belt Rating PIW (kN/m)	Minimum Breaking Strength lbf/in (kgf/mm)		Minimum Pulley Diameters in (mm)		
			% of Rated Belt tension		
	WARP	WEFT	81-100%	61 - 80%	60% & Below
280 (49)	2800 (50)	1300 (23)	12 (300)	12 (300)	10 (250)
320 (56)	3200 (57)	1400 (25)	12 (300)	12 (300)	10 (250)
400 (70)	4000 (72)	1600 (29)	16 (400)	16 (400)	12 (300)
480 (84)	4800 (86)	2000 (36)	20 (500)	16 (400)	12 (300)
650 (114)	6500 (116)	2000 (36)	24 (600)	20 (500)	16 (400)
800 (140)	8000 (143)	2000 (36)	32 (800)	24 (600)	20 (500)
1000 (175)	10000 (179)	2000 (36)	40 (1000)	32 (800)	32 (800)

Table 7.43
Typical tension and pulley diameter ratings for heavy duty PVC belting

Belt Rating PIW (kN/m)	Approximate Belt thickness in (mm)					Approximate Belt Weight lbf/ft² (kgf/m²)				
	Top Cover × Bottom Cover Thickness in (mm)					Top Cover × Bottom Cover Thickness in (mm)				
	0.03 × 0.03 (0.8 × 0.8)	0.08 × 0.03 (2.0 × 0.8)	0.12 × 0.03 (3.0 × 0.8)	0.08 × 0.08 (2.0 × 2.0)	0.12 × 0.08 (3.0 × 2.0)	0.03 × 0.03 (0.8 × 0.8)	0.08 × 0.03 (2.0 × 0.8)	0.12 × 0.03 (3.0 × 0.8)	0.08 × 0.08 (2.0 × 2.0)	0.12 × 0.08 (3.0 × 2.0)
280 (49)	0.31 (7.9)	N/A	N/A	N/A	N/A	1.9 (9.3)	N/A	N/A	N/A	N/A
320 (56)	0.34 (8.6)	N/A	N/A	N/A	N/A	2.2 (10.7)	N/A	N/A	N/A	N/A
400 (70)	0.37 (9.4)	0.42 (10.7)	N/A	N/A	N/A	2.3 (11.2)	2.7 (13.2)	N/A	N/A	N/A
480 (84)	0.39 (9.9)	0.44 (11.2)	N/A	0.49 (12.4)	N/A	2.5 (12.2)	2.9 (14.2)	N/A	3.4 (16.6)	N/A
650 (114)	0.42 (10.7)	0.47 (11.9)	0.51 (13.0)	0.52 (13.2)	0.58 (14.7)	2.8 (13.7)	3.2 (15.6)	3.5 (17.1)	3.5 (17.1)	4.1 (20.0)
800 (140)	0.47 (11.9)	0.52 (13.2)	0.55 (14.0)	0.59 (15.0)	0.63 (16.0)	3.0 (14.6)	3.4 (16.6)	3.7 (18.1)	3.7 (18.1)	4.2 (20.5)
1000 (175)	N/A	N/A	N/A	0.63 (16.0)	0.67 (17.0)	N/A	N/A	N/A	3.9 (19.0)	4.4 (21.4)

Table 7.44
Typical heavy duty PVC belt thickness and weight

www.CEMA-ET.ORG has issued this document (2014) on Apr 24, 2017 to Rajkumar Sivakumar, Siliconman, Inc. (Chennai)

Belt Tension Rating*	Minimum Ultimate Tension		Operating Tension*		Cord Diameter* (Nominal)		Cord Pitch* (Approximate)		Belt Modulus	
	PIW	kN/m	PIW	kN/m	in	mm	in	mm	PIW	kN/m
ST800	4658	800	686	120	.142	3.6	0.688	17.5	329000	57617
ST1000	5710	1000	856	150	.142	3.6	0.547	13.9	411000	71977
ST1250	7138	1250	1070	187	.205	5.2	0.855	21.7	514000	90015
ST1600	9136	1600	1370	240	.205	5.2	0.666	16.9	657000	115058
ST2000	11420	2000	1712	300	.205	5.2	0.533	13.5	822000	143954
ST2500	14275	2500	2140	375	.205	5.2	0.450	11.4	1030000	180381
ST3150	17987	3150	2697	472	.315	8.0	0.768	19.5	1290000	225914
ST3500	19985	3500	2996	525	.315	8.0	0.690	17.5	1440000	252183
ST4000	22840	4000	3424	600	.362	9.2	0.792	20.1	1640000	287208
ST4500	25695	4500	3852	675	.394	10.0	0.805	20.5	1850000	323985
ST5000	28550	5000	4280	750	.433	11.0	1.098	27.9	2050000	359010
ST5400	30835	5400	4623	810	.433	11.0	1.023	26.0	2220000	388782

*Other tension ratings and cord diameters available. Operating tensions based on 6.676:1 safety factor. Pitch based on 48 inch (1218 mm) belt.

Table 7.45
Steel cord belt standard specifications

Belt Tension Rating		Carcass Weight [1]		Minimum Recommended Pulley Diameters % of Rated Tension							
kN/m	PIW	kgf/m²	lbf/ft²	100 to 75%		75% to 50%		< 50%		Snub Pulleys [2]	
				in	mm	in	mm	in	mm	in	mm
ST800	4658	120	1.5	30	762	24	610	18	457	16	406
ST1000	5710	150	1.6	30	762	24	610	18	457	16	406
ST1250	7138	187	2.2	42	1067	36	914	24	610	20	508
ST1600	9136	240	2.4	42	1067	36	914	24	610	20	508
ST2000	11420	300	2.7	42	1067	36	914	24	610	20	508
ST2500	14275	375	3.0	42	1067	36	914	24	610	20	508
ST3150	17987	472	4.2	54	1372	42	1067	36	914	30	762
ST3500	19985	525	4.4	54	1372	42	1067	36	914	30	762
ST4000	22840	600	5.0	60	1524	48	1219	42	1067	36	914
ST4500	25695	675	5.5	66	1676	54	1372	48	1219	42	1067
ST5000	28550	750	6.4	72	1829	60	1524	54	1372	48	1219
ST5400	30835	810	6.7	72	1829	60	1524	54	1372	48	1219

[1] Approximate belt weight = carcass weight + cover weight with minimum cover thicknesses of 5/32 in (4 mm)
[2] Snub pulleys are defined as 6 in (150 mm) or less belt arc contact and less than 50% of rated tension

Table 7.46
Steel cord carcass weight and minimum recommended pulley diameters

WWW.CEMAT.ORG is issued to Suchart Sirakul on Apr 24, 2017 to Rajamangala University of Technology Srivijaya, Trang, Thailand

Cover Compound Weight per 1/32 in (0.8 mm)	ARPM Grade I	ARPM Grade II
lbf/ft² (kgf/m²)	0.18 (0.88)	0.19 (.93)

Table 7.47
Steel cord belt approximate cover weights by ARPM Grade

Note:
The values in tables 7.39-7.47 are typical values. It is impossible to determine every conveyor design in a series of simple tables. Always consult a CEMA Member belt manufacturer for specific application recommendations and belt specifications.

WWW.CEMANET.ORG has issued this document (14604) on Apr 24, 2017 to Pattarapom Sritrakool, Nakhon Pathom, , Thailand

WWW.CEMANET.ORG has issued this document (14604) on Apr 24, 2017 to Pattarapom Sritrakool, Suanluang, , , Thailand

This Page Left Intentionally Blank

Introduction Pg 313
Conveyor Pulleys Pg 313
- Pulley Types
- Standard Steel Drum Pulleys
- Standard Steel Wing Pulleys
- Advantages of Using Cema Standards
- Mine Duty Pulleys
- Engineered Pulleys
- Pulley Overloads
- Conveyor Takeup Discussion
- Abrasive Environments
- Pulley Diameters
- Pulley Face Widths
- Pulley Crown
- Pulley Weights
- Pulley Hub and Bushing Systems
- Advantages of Compression Hub/Bushing Systems
- Keyless Locking Assemblies

Pulley Lagging Pg 322
- Thickness and Attachment
- Rubber Lagging Hardness
- Lagging Grooving
- Ceramic Lagging
- Wing Pulley Lagging
- High Tension Applications

Shafting Pg 325
- Shaft Materials
- Resultant Radial Loads
- Shaft Sizing
- Shaft Sizing by Stress Limit
- Shaft Sizing by Deflection Limit

WWW.CEMANET.ORG has issued this document (1460) on Nov 25, 2017 to Rubber Thermal, SUMUT, Thailand

Bearings for Conveyor Assemblies **Pg 331**
- Mounted Bearing Components
- Bearing Housings
- Housing Materials
- Shaft Attachment Methods
- Seals
- Bearing Loading and Life Loading
- Bearing Handling and Installation
- Bearing Lubrication
- Bearing Failures

Pulley Terminology **Pg 347**
- Pulley Components
- End Disc/Hub Configurations
- Weld Configurations

Special Pulleys **Pg 348**
- Dead Shaft Pulleys
- Magnetic Pulleys
- Motorized Pulleys
- Spiral Pulleys
- Stub Shaft Pulleys

WWW.CEMANET.ORG has issued this document (1460) on Dec 22 2017 to Mr. Kreangkrai Sritrakool, Bangkuang, , , Thailand

INTRODUCTION

Accepted engineering practice is to consider pulleys, shafts and bearings together because they form a composite structure whose operating characteristics are mutually related. Therefore, they are discussed as one topic of belt conveyor design and construction in this chapter.

CONVEYOR PULLEYS

Conveyor pulley construction has progressed from fabricated wood, through cast iron, to present welded steel fabrication. Increased use of belt conveyors has led industry away from custom-made pulleys to the development of Standard Steel Pulleys with universally accepted size ranges, construction similarities, and substantially uniform load-carrying capacity for use with belts having a carcass composed of plies or layers of fabric. "Standard" Drum and Wing Pulleys are suitable for these applications. The present trend, however, is to use higher tonnage conveyor systems with wider, stronger belts that incorporate a carcass of either steel cables or high-strength tensile members. In these applications, where high tensions are encountered, the use of custom-made "Engineered" welded steel pulleys is dictated. See Chapter 7 for a description of the various types of conveyor belts. ANSI/CEMA Standards B105.1 and 501.1 are standards maintained by CEMA for selection of standard drum and wing pulleys.

Pulley Types

The most commonly used conveyor pulley is the Standard Steel Pulley as shown in Figure 8.1. They are manufactured in a wide range of sizes and consist of a continuous rim and two end discs fitted with compression type hubs. In most wide-faced conveyor pulleys, intermediate stiffening discs are welded inside the rim. Other pulleys available are self-cleaning wing types, which are used at the tail, takeup or elevator boot locations where material tends to build up on the pulley face. Figures 8.1 through 8.6 illustrate the more common types of conveyor pulleys now in use.

Standard Steel Drum Pulleys

Standard welded steel drum pulleys are defined by CEMA B105.1. The standard establishes load ratings, allowable variation from nominal dimensions, permissible crown dimensions, and overall dimensions normally necessary to establish clearances for location of adjacent parts. The standard applies to a series of straight and crown-faced welded steel conveyor pulleys that have a continuous rim and two end discs, each with a compression type hub to provide a clamp fit on the shaft.

The tabulated ratings for drum pulleys and shaft combinations are based on using non-journaled shafting with pulleys centrally located between two bearings. High strength shafting may be required with drive pulleys to withstand the added shaft stresses from torsional loads, overhung loads or turndowns for bearings. Belt tension limits are also provided and must be checked, especially for pulleys with low arc of contacts such as snubs or bends.

CEMA B105.1 is not applicable to single disc pulleys, wing pulleys, cast pulleys, or pulleys not utilizing compression hubs. The standard is not intended to specify construction details other than those listed above. The standard covers pulleys up to 60 inch (1524 mm) diameter for shaft diameters up to 10 inches (254 mm) and face widths up to 66 inches (1676 mm) and therefore encompasses the majority of combinations of welded steel pulleys with compression type hubs that are normally used in current belt conveyor and elevator practice. It is not recommended to operate Standard Drum Pulleys above a belt speed of 800 feet per minute (4 m/s). For higher speeds, manufacturers should be consulted.

www.CEMANET.ORG has issued this document (1400) on May 2, 2017 to Pattaporn Sirisuang, , Thailand

Welded steel conveyor pulleys covered by CEMA B105.1 should not be used with steel cable or other high modulus conveyor belts because such belts create tension concentrations and demand manufacturing tolerances beyond the capacities of these pulleys. Such conveyor belts require Engineered conveyor pulleys.



Figure 8.1
Drum Pulley

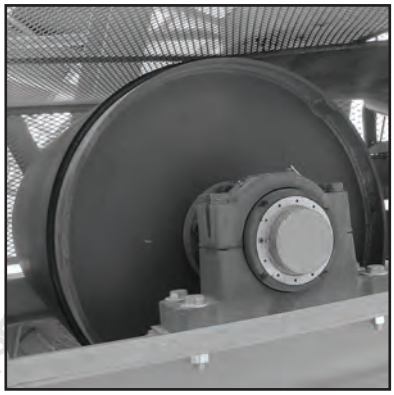

Figure 8.2
Drum pulley in use

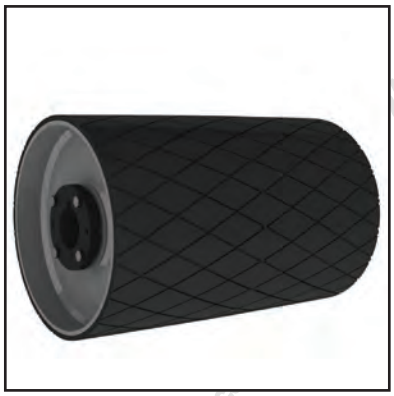

Figure 8.3
Lagged drum pulley



Figure 8.4
Lagged drum pulley in use

Standard Steel Wing Pulleys

Standard welded steel wing pulleys are defined by CEMA 501.1. Like the drum pulley standard, this standard establishes load ratings, allowable variations from nominal dimensions, permissible crown dimensions, and overall dimensions normally necessary to establish clearances for location of adjacent parts. The standard covers pulleys up to 36 inches (914 mm) diameter for shaft diameters up to 8 inches (203 mm) and face widths up to 66 inches (1676 mm) and therefore encompasses the majority of combinations of welded steel wing pulleys with compression type hubs that are normally used in current belt conveyor and elevator practice.

The standard applies to a series of straight and crown-faced welded steel wing pulleys that have a number of steel wing plates that extend radially from the longitudinal axis of two compression hub assemblies and are equally spaced about the pulley circumference. The purpose of the compression hubs is to provide a clamp fit on the shaft. The wings are supported or joined by welded steel plates so arranged as to form the shape of two frustums of cones or regular pyramids joined at their bases. A contact bar is attached to the outer longitudinal edge of each wing to provide contact area with the belt.

Thailand
24, 2017 to Pattarapo
www.CEMANORM.com

The tabulated ratings for wing pulleys and shaft combinations are based on using non-journaled shafting through the pulley hubs, with pulleys centrally located between two bearings. Belt tension limits are also provided.

Welded steel wing pulleys covered by CEMA 501.1 should not be used with steel cable or other high modulus conveyor belts because of the eccentricity inherent in the construction of a wing pulley. It is not recommended to operate Standard Wing Pulleys above a belt speed of 450 feet per minute (2.3 m/s). For higher speeds, manufacturers should be consulted. Wing pulleys are not designed to be used in locations that transmit torque.

The use of wing pulleys should be limited because they will shorten the life of the belt and the mechanical belt splice. Wing pulleys should only be used after all other means of keeping material from getting between the belt and the pulley have been tried and failed. This would include skirt boards, belt cleaners, belt plows, and belt scrapers. Then wing pulleys should only be used for takeups, tails and elevator boots. See Chapter 11 for additional information and limitations for wing pulleys.

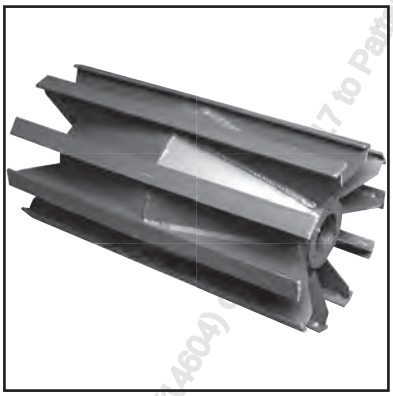

Figure 8.5
Wing pulley



Figure 8.6
Wing pulley in use

Advantages Of Using CEMA Standards

The Standard Drum and Wing Pulleys discussed above can be used in most conveyor applications. The designer of belt conveyors will find the CEMA standards listed above invaluable in determining specifications for pulleys and shafting and in finding information that will permit the framework and supporting bearings to be detailed into the design. Suitable pulleys conforming to these standards can be obtained readily from the principal pulley manufacturers. Many of the sizes are considered stock sizes and are in their inventory of finished goods.

Mine Duty Pulleys

Standard size drum and wing pulleys are available in mine duty construction. Typically, a mine duty pulley is one whose material thicknesses have been increased for a rigid, conservative design. Mine duty pulleys were originally specified and used for underground mining operations where the abusive environment and high cost of installation demanded a more conservative design. Mine duty pulleys can be appropriate for conveyors with frequent starting and stopping, overloads exceeding 150% of running tensions, or where increased reliability is necessary.

WWW.CEMANET.ORG Reproduction of this document (14604) is licensed to Patrapan Sirikul, Suandok, Thailand

Mine Duty Pulleys can be considered in a conveyor application requiring heavier construction and more conservative design to give greater service life where abrasion is a factor; or there are longer running conveyor hours to consider. Mine duty pulleys are pre-engineered, not to a specific application or for a particular purpose but will have lower stress and deflection on the various components and offer greater service factors over standard CEMA rated pulleys. These increased ratings can be achieved by design and manufacturing considerations including heavier rim and end disc material thicknesses, increased rigidity of shafts and end discs and use of manufacturing processes that increase the endurance strength of the pulley. No CEMA standard governs the load ratings or material thicknesses of mine duty pulleys. Each pulley manufacturer should be contacted for specific details on their mine duty pulley design and manufacturing process.

Engineered Pulleys

Engineered Pulleys are specifically designed to meet load conditions of a particular conveyor. Specific information is required for proper and economical design, since the designer must allow for sufficient strength in the rim, end disc, shaft, and mounting system to carry the belt loads and to assure proper pulley to shaft connection.

Common reasons for using Engineered Pulleys are:

- Belt tensions and resultant loads exceed CEMA standards B105.1 and 501.1
- Pulley diameter, face width, and shaft diameter combination falls out of size ranges defined in CEMA standards B105.1 and 501.1
- Conveyor belt uses steel cable, steel mesh, aramid, or other high modulus carcass
- A desire to control project costs by optimizing pulleys for their intended use
- Conveyors operate at high speeds with nearly continuous service
- Transient belt tensions greater than 50% more than steady state running tensions

Typical Engineered Pulley applications are overland conveyors, high tonnage mining conveyors, large coal power plants, ore processing facilities, and large capital projects.

High modulus belts are defined as those having operating tension ratings greater than 800 PIW (140 kN/m) or a modulus greater than 80,000 PIW (14,000 kN/m). These belts require pulley design considerations and dimensional tolerances exceeding CEMA standards. Starting, braking, and other dynamic loads may be more directly transmitted to the pulleys. Reduced belt stretch requires straight faced pulleys with rim and lagging concentricity improved to 0.030 inches (0.76 mm). Special emphasis should be placed on aligning structural supports and pulleys with the belt line to prevent damage from load concentrations. See Chapter 7 and contact your belt and pulley manufacturers for more information on high modulus belts.

Construction details vary, ranging from flexible end discs and compression type hubs with plain shafting to heavy rigid end discs fitted to specially machined shafts. Special manufacturing specifications are common and often include accurately machined surfaces, stress relieving, special welding controls, and non-destructive testing.

System designers may specify special design requirements, some of the most common being stress limits, deflection limits, materials, and construction techniques. CEMA recommends using 0.0015 in./in. (0.0015 mm/mm), i.e. 5 minutes, shaft deflection limit for Engineered Pulleys used in critical applications, which results in shafts consistent with components often used on high tension pulleys. Specifying deflection limits less than CEMA standard 0.0023 in/in (0.0023 mm/mm) for Standard Wing and Drum

www.PDFNET.OnlineDocument(1468) on Apr 24, 2020 to Pattal PT Srirakool, Standard, Malang

Pulleys is not intended to imply the difference is a safety factor on running loads. CEMA recommends system designers apply appropriate safety factors to belt tensions communicated to assure they represent maximum steady state running conditions. Reference pulley overloads section of this chapter for more information.

All components making up the pulley and shaft assembly must be integrated to provide a fully capable power transmission system. Several factors must be considered to design reliable and economical conveyor pulleys for the intended operating conditions, which require the following information:

- Diameter, face width, straight or crowned
- Bearing centers
- Location of pulley: head, bend, snub, takeup, etc.
- Type of belt takeup: gravity, screw, etc.
- Type of conveyor belt
- Transient belt tensions on pulley
- Worst case running belt tensions on pulley
- Belt wrap angle on pulley
- Shaft diameter (at hub, bearing, drive) if predetermined
- Lagging specifications
- Overhung load with location on drive pulley shaft (if it exists)
- Drive power
- Belt speed
- Bearing life
- Starting mechanism (reduced voltage, fluid coupling, etc.).
- Special environmental and operating conditions

Pulley Overloads

Excessive belt tensions may result in premature failure of pulleys, shafting, or bearings. Differentiating between transient tension increases and steady state running tensions is important for proper pulley design.

Transient, or dynamic, tension increases happen for a short period and then subside. These periods generally last for a few minutes or less and represent less than 1 percent of operating time. Some examples are starting, stopping, and jam-ups. Transient loads should not exceed design loads by more than 50 percent. If greater than 50 percent for more than 1 percent of running time Engineered Pulleys are recommended and this information must be provided to your pulley manufacturer.

Steady state running tensions happen for a significant period of time and represent the fundamental operating conditions. Conditions that can increase running tensions are excessive belt misalignment, excessive material loaded, excessive takeup weight, gravity takeup frictional increases, and over tightening of screw takeups. Normal running tensions for Standard Pulleys should not exceed ratings in the CEMA B105.1 and 501.1 load tables. Normal running tensions for Engineered Pulleys should not exceed those used for design.

Conveyor Takeup Discussion

From the pulleys point of view takeup systems are the most important part of the conveyor. Takeup belt tensions are the primary load for the majority of pulleys on typical conveyors. A high percentage of pulley problems can be traced to poor communication of takeup conditions, changes to the takeup after commissioning, or poor takeup maintenance.

www.CEMANet.org Includes Handbook Document (2669) on Apr 04, 2017 to Pattarapom Sritrakool, Suanluang, , Thailand

Screw takeup conveyor belt tensions are dependent upon the judgment of the person turning the wrench. In many cases, the takeup is capable of creating excessive belt tensions. Methods in Chapter 6 are designed to anticipate higher tensions, but over tightening the takeup can still result in excessive tensions. Tightening beyond what is needed to control drive slip and belt sag is not recommended.
Larger conveyors often use a gravity takeup. In theory, the hanging weight should eliminate unexpectedly high takeup belt tensions. Testing of actual systems suggest noticeable belt tension variation from design values exists. Common reasons for this are:

- Loads such as the box holding the weight, attachment structure, and pulley assemblies get omitted in the takeup belt tension calculation
- Weight is added after the initial commissioning
- Sheave friction and wire rope bending forces get omitted (testing has shown wire rope tensions up to 40% higher at the pulley than at the weight box)
- Material spillage builds up on the takeup
- Structural damage or poor alignment causes restrictions to takeup travel.

See Chapter 15 for additional information on takeups

Abrasive Environments

Drum pulley rims are usually manufactured using low carbon steel plate, pipe, or tubing. Wing pulley contact bars are usually manufactured using low carbon steel bars or plate. The rim and contact bars are not designed to be a wear item. For some belt conveyor applications, these materials provide sufficient pulley life. For abrasive conditions, the pulleys should be lagged to prevent wear. The lagging should be monitored for wear and replaced before it wears down to the steel. Another consideration for increasing pulley life is to specify thicker rims or contact bars. Wing pulley contact bars can also be manufactured from abrasion resistant (AR) steel to increase the life.

Pulley Diameters

Standard Steel Drum and Wing Pulley diameters and permissible diameter runouts are shown in Table 8.7. All other pulley diameters are considered special. These nominal diameters apply to straight and crown-face pulleys and are for bare pulleys only; they do not include any increases in diameter due to the application of lagging. The nominal diameter is measured at the midpoint of the pulley face width. Pulley diameters should be selected per the CEMA standards and the belt manufacturer's recommendations, as described in Chapter 7, as well as for other drive or space considerations. Runout tolerance, TIR, on the diameter is measured at the midpoint of the bare pulley face and is given in Table 8.7. When the lagging is not machined, the runout tolerance over lagging is specified by the individual pulley manufacturers.

Standard Pulley Diameters and Allowable Total Indicator Runout in (mm)														
Drum Pulley	8 (203)	10 (254)	12 (305)	14 (356)	16 (406)	18 (457)	20 (508)	24 (610)	30 (762)	36 (914)	42 (1067)	48 (1219)	54 (1372)	60 (1524)
Drum TIR	0.125 (3.18)								0.188 (4.78)				0.250 (6.35)	
Wing Pulley	8 (203)	10 (254)	12 (305)	14 (356)	16 (406)	18 (457)	20 (508)	24 (610)	30 (762)	36 (914)				
Wing TIR	0.188 (4.78)													

Table 8.7
Standard pulley diameters and maximum permissible total indicator reading runout for common applications

Copyright CEMA 2007 - Not for Distribution (1466.4) Apr 24, 2017 to Patarapon Sritrakul, Suanduang , Thailand

Permissible variations from nominal diameters of Standard Steel Pulleys are based on face width and given in Table 8.8. All other face widths are considered special.

Standard Pulley Face Widths in (mm)	Permissible Diameter Variation in (mm)			
	Over Nominal Diameter		Under Nominal Diameter	
	Drum	Wing	Drum	Wing
12 (305) through 26 (660)	0.250 (6.35)	0.125 (3.18)	0.125 (3.18)	0.375 (9.53)
over 26 (660) through 66 (1676)	0.625 (15.88)	0.125 (3.18)	0.125 (3.18)	0.750 (19.05)

Table 8.8
Standard Pulley permissible diameter variations based on face width

These limitations apply equally to straight face and crown-face pulleys. The nominal diameter is measured at the midpoint of the pulley face width. The diameter is defined as the bare diameter exclusive of lagging. Listed variations may occur from one pulley to another. The permissible diameter variations listed are not to be construed as runout tolerance.

Engineered Pulleys to be used with steel cable or high modulus belts are usually machined with a straight face and have permissible total indicator reading runout tolerances as given in Table 8.9.

Drum Pulley Description	Maximum Permissible TIR in (mm)
Unlagged Pulley	0.030 (0.76)
Lagged Pulley (under lagging)	
Lagged Pulley (over lagging)	

Table 8.9
Permissible total indicator reading runout for Engineered Pulleys for steel cable/high modulus belts

Pulley Face Widths

Pulley face width is the length of rim, wing or contact bar along the shaft axis. Standard Pulley face width is normally equal to the belt width plus 2 inches (51 mm) for belt widths up to and including 42 inches (1067 mm) and belt width plus 3 inches (76 mm) for belt widths over 42 inches (1067 mm). Engineered Pulley face widths are generally 6 to 12 inches (152 to 305 mm) greater than the belt width to provide greater clearance. The conveyor belt should not wander beyond the edge of the pulley face. Refer to Chapter 7 for more information on pulley face widths.

Standard Steel Drum and Wing Pulley Nominal Standard Face Widths in (mm)												
12 (305)	14 (356)	16 (406)	18 (457)	20 (508)	22 (559)	26 (660)	32 (813)	38 (965)	44 (1118)	51 (1295)	57 (1448)	63 (1600)	66 (1676)
Permissible face width variance from nominal width is ± 0.125 in (3.18 mm) for Drum pulleys and ± 0.250 in (6.35 mm) for Wing pulleys												

Table 8.10
Standard Pulley face widths

The listed variations in face width may occur from one pulley to another. The permissible face width variations are not to be construed as an edge runout tolerance. Edge runout tolerance is specified by the individual pulley manufacturer.

www.BNET.ORG Personal use document (1).pdf on Apr 24, 2017 to Pasquan Strakosha (pasquan.strakosha@gmail.com)

Pulley Crown

See Chapter 7 for a discussion of the use of crowned conveyor pulleys. There are currently three types of pulley crowning available, straight face, taper crown and trapezoidal crown.

Straight Face

Straight face pulleys have no crown and are favored by the belt manufacturers. They are recommended for all installations using reduced ply, high modulus, low stretch belts, such as those with a carcass of steel cables or high strength tensile members.

Taper Crown

On taper crown pulleys, the face forms a "V" with the rotating axis larger in diameter in the center of the pulley. This crown is expressed in inches of crown per foot of total face width, by which the diameter at the center of the face exceeds the diameter at the edge. Normal crowns of this type vary from 1/16 to 1/8 inch per foot (5.2 to 10.4 mm per meter) of total face width.

Trapezoidal Crown

Trapezoidal (Trap) crown pulleys have a flat surface in the middle portion of the pulley face with the ends tapered. Trapezoidal crown pulleys may be appropriate for wider face width pulleys.

Pulley Weights

Pulley weights must be used to determine pulley and shaft selection. Average weights for Standard Steel Drum and Standard Wing Pulleys are available from the manufacturer. There are some variations in manufacturing practices that will affect the weight of the pulleys. Engineered Pulley weights are dependent on the tensions encountered and can vary widely.

Pulley Hub And Bushing Systems

Although some conveyor pulleys are manufactured with cylindrical bores, compression hub/bushing systems are more common. These systems consist of a hub and a bushing with tapered mating surfaces that cause the hub to expand and the bushing to contract onto the shaft when the screws are tightened. There are three major types of hub systems. Hubs can be welded into the end discs, expanded into the end discs or the end discs can have an integral hub. Hubs have a tapered bore that mates to the taper on the outside diameter of the bushing. Welded-in and integral hubs have no split, while hubs that expand into the end discs must be split completely through one side (axially therefore forming a 'C' shape) to develop the forces necessary to transmit the required torque via friction.

All systems use split tapered bushings. They can have normal or shallow tapers, and they can come with or without flanges. The bushings are installed by inserting cap screws through the bushing and engaging them into threaded holes in the hubs. Flangeless bushings are either installed in a similar fashion or installed with screws that engage in threaded half holes in the mating hub and non-threaded half holes in the bushing (Figure 8.12). Tightening these screws causes the hub and bushing to move axially relative to one another. The hub expands and the bushing contracts on the shaft. These radial forces develop enough friction to allow the hub/bushing systems to keep the pulley locked securely to the shaft axially and usually with the aid of a key, to transmit torque from/to the shaft on drive pulleys. Keys are generally not required on non-drive pulleys.

WWW.BANET.OR.TH Personal use only (Document(1).pdf) on Apr 24, 2017 to Pattaraporn Sitrakool, Sudalung., , Thailand

Flanged Systems

These types of systems have a taper in the order of 2 to 3 inches per foot (166 to 250 mm per meter) on the diameter. The advantage of the taper is that it reduces pulley end disc stress caused by the installation of the second bushing. The less the amount of axial movement required to develop the expansion forces, the lower the stress induced in the end discs when installing the bushing on the other end.



Figure 8.11
Flanged bushing

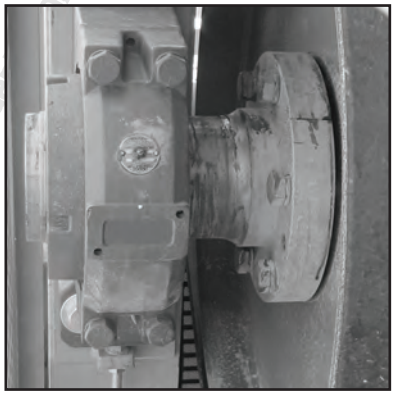

Figure 8.12
Flanged bushing in use

Flanged Systems with a Shallow Taper Angle

These systems have a shallow taper, approximately 3/4 inch per foot (62 mm per meter) on the diameter. The advantage of a shallow taper is that they can develop higher expansion/contraction forces. These systems also are used where the hub is not welded to the end discs but expands into it producing a friction connection.

Flangeless Systems

Flangeless bushings can have either normal or shallow tapers. As mentioned previously, the bushings are installed by inserting cap screws through the bushing and engaging them into threaded holes in the hubs. In addition, there is a type of flangeless bushing, shown in Figure 8.12, that is installed with screws that engage in threaded half holes in the mating hub and non-threaded half holes in the bushing. Since there is no flange, the bushings require less axial space than flanged bushings. Also, because there is no flange, the bushing mounts flush or nearly flush with the hub and there are few if any protruding parts to collect dust or debris.



Figure 8.13
Flangeless bushing



Figure 8.14
Flangeless bushing in use

WWW.CEMANET.ORG has issued this document (1460A) on Apr 27 2017 to Pattarapom Sritrakool, Suan Sunandha Rajabhat University, Thailand

Advantages Of Compression Hub/Bushing Systems

There are several advantages to using compression hub/bushing systems. The tapered bushings are very quick and simple to install and dismount. The clamping force of the bushing on the shaft improves concentricity and minimizes the probability of fretting corrosion. No damage to the shaft occurs because no setscrews contact the shaft, and dismounting is quick and simple. Each hub size will accommodate one bushing size. In turn, each bushing size can accommodate a range of bore sizes. Therefore a pulley with a given hub size will accommodate a range of shaft diameters simply by changing the bushings. This results in a decreased inventory of spare parts required and the subsequent benefits. Since most tapered bushings are also available with a minimum plain bore, stocking these bushings, and boring as necessary to size, can further reduce inventory.

Keyless Locking Assemblies

Though not classified as a compression hub/bushing system, keyless locking assemblies are also used to connect shafts to pulleys. These are not to be confused with shallow taper type compression hub/bushing systems that do not require keys to lock non-drive pulleys and some small-bore drive pulleys to the shaft. These devices use many more screws than the other systems. They develop very high expansion/contraction forces and therefore do not utilize keys to lock the pulley to the shaft. A split inner ring contacts the shaft, and a split outer ring contacts the hub bore. There are single and double taper styles. They can have steep, normal, or shallow tapers. Tightening the screws slides the cones towards each other, forcing the inner ring against the shaft and the outer ring against the end disc or solid hub respectively. Due to the very high expansion/contraction forces, keyless locking assemblies require special design considerations to handle the resulting stresses in the shaft and end disc/solid hub.



Figure 8.15
Single taper keyless locking assembly



Figure 8.16
Double taper keyless locking assembly

PULLEY LAGGING

Conveyor pulleys can be covered with some form of rubber, fabric, ceramic, urethane or other material. Lagging is used on driving pulleys to increase the coefficient of friction between the belt and pulley. See Chapter 6 for details on the coefficient of friction between the lagging and the belt and C_w factor chart. Lagging is also used to reduce abrasive wear on the pulley face and to effect a self cleaning action on the surface of the pulley. Abrasive wear and material buildup can substantially decrease pulley life. Drive pulleys should always be lagged. Non-driving pulleys, especially on the carrying side of the belt, should be lagged whenever abrasive or buildup conditions exist. Also, see Association of Rubber Products Manufactureres (ARPM) Roll Covering Handbook for additional information.

Thickness And Attachment

Lagging thickness can vary from a few thousandths of an inch (0.05 mm), as with a sprayed-on coating, to thicknesses of 1 to 2 inches (25 to 51 mm), as with some solid rubber vulcanized coatings. Common methods of attachment are bolting, cold bonding, welding, and vulcanizing. Cold bonded and vulcanized lagging are the preferred methods for heavy duty or severe service applications. Of the preferred methods, vulcanized lagging is the most common and most economical. In applications where added rubber elasticity is needed, the cold bond method is preferred. Lagging can be obtained in various grooved and other specialized surface finish types. Bolted-on lagging usually consists of a rubber cover reinforced with multiple ply fabric construction similar to conveyor belting. The fabric plies are required to provide strength under the bolt heads. Welded lagging can be either a slide-on or weld-on lagging. Slide-on lagging is constructed of rubber or ceramic tiles embedded in rubber molded to a metal backing plate and slots welded onto the pulley face. Replacement of the pads can be accomplished by sliding the old strip out of the slots and the new strip in without removing the pulley from its conveyor location. Weld-on lagging is constructed of rubber or ceramic tiles embedded in rubber molded to a metal backing plate. The metal backing plate is welded to the pulley face. Replacement of weld on lagging can also be done without removing the pulley from its conveyor location.

Rubber Lagging Hardness

Rubber lagging used on drive pulleys normally has a durometer hardness of 60 on the Shore A scale. The lagging used on non-driving pulleys may have a hardness of 45 or to 60 Shore A, depending on the application. For snub and bend pulleys, which contact the carrying side of the belt, softer rubber tends to better resist buildup on the pulley face. With high tension belts, lagging of 70 Shore A hardness is sometimes used.

Lagging Grooving

Drive pulleys, which operate in wet or damp conditions, commonly incorporate grooved lagging. These grooves generally take a shape designed to shed water and slurry materials that can build up at the lagging interface and lower lagging drive efficiency. Common shapes used include diamond, herringbone, and chevron patterns. Grooves are usually spaced on 1-1/4 to 2-1/2 inch (30 to 63.5 mm) centers. In a chevron pattern, the grooves meet at the center of the pulley face, while in the herringbone pattern the grooves are offset by one-half the groove spacing. Figures 8.16 through 8.18 illustrate the grooving patterns. In the Herringbone and Chevron patterns, the apex points in the direction of belt travel. Generally, the dimensions of the grooves are 1/4 inch (6.35 mm) wide by 1/4 inch (6.35 mm) deep with a 1/8 inch (3.18 mm)minimum thickness of material under the bottom of the rubber. There are also groove configurations and sizes of rubber lagging, which can be furnished to enhance belt tracking or reduce the accumulation of material on the pulley face. Ceramic lagging also incorporates grooves, which are configured based upon the ceramic tile layout.

WWW.CEMANET.CRICHOS SOUTH AMERICA (15504) on 5/12/2014 To Palabra Creada Spanish Version



Figure 8.17
Herringbone lagging grooves



Figure 8.18
Chevron lagging grooves

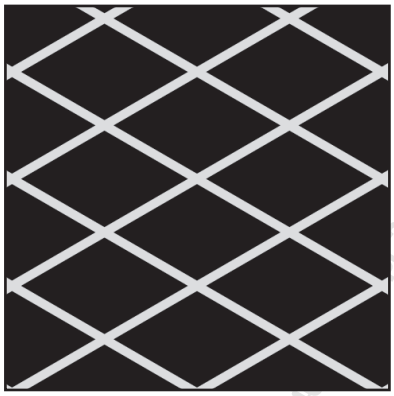

Figure 8.19
Diamond lagging grooves



Figure 8.20
Pulley with diamond groove lagging



Figure 8.21
Slide on lagging



Figure 8.22
Ceramic lagging

WWW.CEMAN... ...s document (14... ...24, 2017 to Pattarapom ...

Ceramic Lagging

In applications where belt slip or high wear are a concern, ceramic lagging may be used. Ceramic lagging commonly consists of a series of tiles embedded in a rubber substrate forming a bar profile. The tiles may be smooth or have raised surfaces on each tile. Those with raised surfaces tend to have better drive characteristics under wet, sloppy conditions. Due to the raised surface on the tile and the nature of ceramic, this type of lagging exhibits a superior coefficient of friction and greater wear resistance than rubber lagging. Depending upon application conditions, dimpled ceramic lagging can provide approximately 2 times higher traction than rubber lagging.

Wing Pulley Lagging

There are many types of lagging just for use on wing pulleys. Much of what has already been covered applies to lagging for wing pulleys. Each manufacturer has their own design so contact the pulley manufacturer for details.

High Tension Applications

With steel cable and other high modulus conveyor belts, lagging is always used on drive pulleys and is preferred on pulleys that contact the carrying side of the belt. For maximum pulley life and belt safety, lagging can be used on all non-drive pulleys. Lagging for high tension applications can be either cold bonded or vulcanized with either rubber or ceramic lagging.

SHAFTING

Suitable shafting to be used with a steel pulley cannot be selected independently of the pulley load rating. In fact, the load capacity of a given pulley is a function of the shaft that is installed in that pulley. The shaft and pulley must be treated as a composite structural assembly. This is because the structural rigidity of the assembly depends upon both the shaft and the pulley and their interaction.

The shaft diameter required for a pulley assembly is a function of two criteria, strength and deflection. Depending on the exact pulley assembly, either strength or deflection can be the determining factor for shaft diameter selection.

Shaft Materials

Pulley design is based upon the use of any commercial or standard shafting material, such as AISI C1018 or C1045 steel. Load ratings of standard or mine duty pulleys are not increased when higher strength shafting is used. High strength shafting is of value in cases where it permits the shaft ends to be turned down so that smaller diameter, high capacity anti-friction bearings can be used. It is also sometimes of value on drive shafts to withstand the added torsional stresses. While the use of high strength steel increases the strength of the shaft, its use does not decrease deflection.

Resultant Radial Load

The resultant pulley radial load is the vector summation of the belt tensions, pulley weight, and weight of shaft. The force from weights always acts downward, and the forces from the belt act in the path of the belt and away from the pulley. Resultant radial load calculations for typical pulley arrangements and a general case are illustrated using trigonometric methods in Figure 8.23.

www.CEMA.org Created/Issued to document 10.4.0 on Apr 24, 2017 for Prapaiprapom Sookkool, Suanluang, Thailand

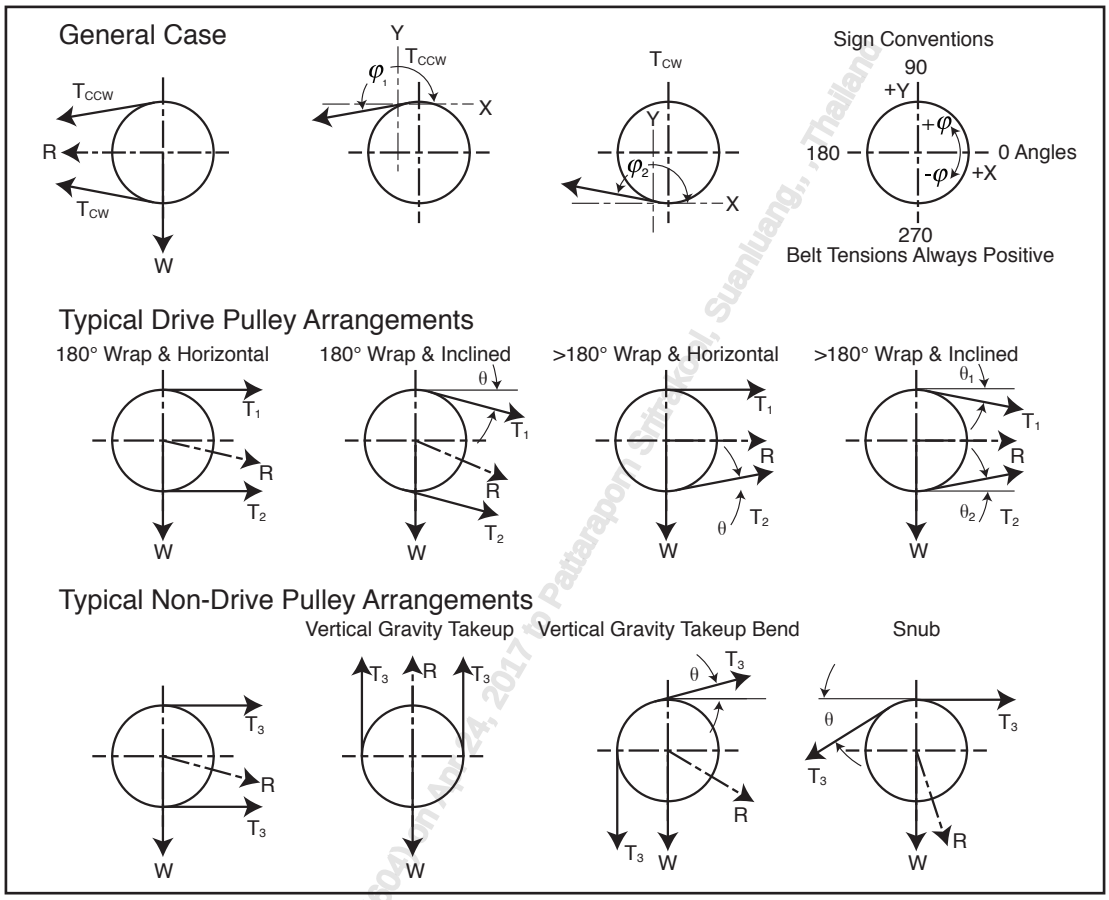

Figure 8.23
Resultant radial load diagrams

$$R = \sqrt{\left(\left(T_{ccw} \times \cos(\varphi_1)\right) + \left(T_{cw} \times \cos(\varphi_2)\right)\right)^2 + \left(\left(T_{ccw} \times \sin(\varphi_1)\right) + \left(T_{cw} \times \sin(\varphi_2)\right) - W\right)^2}$$

Equation 8.24
R, Resultant pulley load for general case

Where:

T_{ccw} = Belt tension counter-clockwise [lbf, (N)]
T_{cw} = Belt tension clockwise [lbf, (N)]
φ_n = Belt tension angle for case "n" in degrees ($+\varphi_n$ CCW from 0) ($-\varphi_n$ CW from 0)
W = Weight of pulley and shaft [lbf, (N)]

$$R = \sqrt{\left(T_1 + T_2\right)^2 + W^2}$$

Equation 8.25
R, Resultant load for 180 degree wrap drive pulley, horizontal belt

WWW.CEMA-ONLINE.COM has issued this document (1450A) on Apr 24, 2017 to Pattaraporn Srisakul, Suanluang, , Thailand

$$R = \sqrt{((T_1 + T_2) \times \cos(\theta))^2 + ((T_1 + T_2) \times \sin(\theta) + W)^2}$$

Equation 8.26

R, Resultant load for 180 degree wrap drive pulley, inclined belt

$$R = \sqrt{(T_1 + (T_2 \times \cos(\theta))^2 + ((T_2 \times \sin(\theta) - W)^2}$$

Equation 8.27

R, Resultant load for >180 wrap drive pulled, horizontal belt

$$R = \sqrt{((T_1 \times \cos(\theta_1)) + (T_2 \times \cos(\theta_2)))^2 + (-(T_1 \times \sin(\theta_1)) + (T_2 \times \sin(\theta_2)) - W)^2}$$

Equation 8.28

R, Resultant load for >180 wrap drive pulley, inclined belt

$$R = \sqrt{(2 \times T_3)^2 + W^2}$$

Equation 8.29

R, Resultant load for tail pulley

$$R = (2 \times T_3) - W$$

Equation 8.30

R, Resultant load for vertical gravity takeup pulley

$$R = \sqrt{(T_3 \times \cos(\theta))^2 + (1 - \sin(\theta) \times T_3 + W)^2}$$

Equation 8.31

R, Resultant load for vertical gravity takeup bend pulley

$$R = \sqrt{(T_3 \times (1 - \cos(\theta)))^2 + (T_3 \times \sin(\theta) + W)^2}$$

Equation 8.32

R, Resultant load for snub pulley

Where:

T_1 = Tight side belt tension [lbf (N)]
T_2 = Slack side belt tension [lbf (N)]
T_3 = Belt tension non-driven pulleys [lbf (N)]
W = Pulley and shaft weight [lbf (N)]
θ_n = Belt tension angles in degrees (+ as shown in Figure 8.23)

WWW.CEMANET.ORG has issued this document (14604) on Apr 24, 2017 to Pacerapoth Chaisool, Suddhiang, Thailand

Shaft Sizing

Shafts are sized using both a Stress Limit and Deflection Limit. If there is an overhung load, it needs to be included in the Stress Limit calculations. The shaft is sized using the Stress Limit and then the Deflection limit. Then whichever gives the larger shaft size governs. The diameter is then increased to the next standard shaft size.

Shaft Sizing By Stress Limit

Equation 8.33 is given in CEMA B105.1 for the diameter of a pulley shaft loaded in bending and torsion (drive pulley with no overhung load) is:

$$D = \sqrt[3]{\frac{32 \times F.S.}{\pi} \times \sqrt{\left(\frac{M}{S_f}\right) + \frac{3}{4} \times \left(\frac{T}{S_y}\right)^2}}$$

Equation 8.33
D, Shaft size based on stress

Where:

D	= Shaft Diameter [in (mm)]
F.S.	= Factor of Safety = 1.5 (dimensionless)
S_f	= Corrected shaft fatigue limit = $k_a \times k_b \times k_c \times k_d \times k_e \times k_f \times k_g \times S_f$*
k_a	= Surface factor = 0.8 for machined shaft (dimensionless)
k_b	= Size factor = $(D)^{-0.19}$ for D in inches or $1.85 \times (D)^{-0.19}$ for D in mm (used as dimensionless)
k_c	= Reliability factor = 0.897 (dimensionless)
k_d	= Temperature factor = 1.0 for -70 °F (-57 °C) to + 400 °F (+204 °C) (dimensionless)
k_e	= Duty cycle factor = 1.0 provided cyclic stresses do not exceed S_f* (dimensionless)
k_f	= Fatigue stress concentration factor due to keyway (dimensionless)
k_g	= Miscellaneous factor =1.0 for normal service (dimensionless)
M	= Bending moment [lbf-in (N-mm)]
T	= Torsional moment [lbf-in (N-mm)]

Fatigue Stress Concentration Factor, k_f (dimensionless)		
Steel	**Profiled Keyway**	**Sled Runner Keyway**
Annealed <200 BHN	**0.63**	**0.77**
Quenched and drawn >200 BHN	**0.50**	**0.63**

Table 8.34
k_f, Fatigue stress concentration factors for typical pulley keyway configurations

50% of Tabulated Ultimate Tensile Strength, S_f*	
Steel	**S_f* psi (MPa)**
SAE 1018 < 200 BHN	**29,000 (200)**
SAE 1045 < 200 BHN	**41,000 (283)**
SAE 4140 , 200 BHN annealed	**47,500 (328)**

Table 8.35
S_f* 50% of ultimate tensile strengths for typical pulley shaft materials

WWW.CEMANET.ORG - Files issued by document (1450) on Apr 24, 2017 to Pattarapom Sriakkool, Saenluang, , Thailand

Yield Strength, S_y	
Steel	**S_y psi (MPa)**
SAE 1018 < 200 BHN	**32,000 (220)**
SAE 1045 < 200 BHN	**45,000 (310)**
SAE 4140 , 200 BHN annealed	**60,500 (417)**

Table 8.36
S_y, Yield strengths for typical pulley shaft materials

For drive pulley shafts with overhung loads outboard of the pillow block bearings, such as a shaft mount reducer or chain drive, refer to CEMA B105.1 or vector methods for inclusion of the effects of the overhung load on the bending moment, M.

The method shown above can also be used to develop allowable bearing turndown sizes by adjusting the bending moment, M, for the correct moment arm and multiplying the bending moment, M, and torsional moment, T, by the stress concentration factors for shaft turndowns, available in many engineering texts.

Shaft Sizing By Deflection Limit

The pulley assembly is a structural unit, and strengths of different components are interdependent. The shaft diameter, the bearing centers, the thickness of the end disc, the resultant loads on the pulley, the hubs, and the pulley to shaft attachment method are all interconnected in this respect. A steel pulley with very thin end discs, or flexible shaft attachment devices, can have an actual shaft deflection similar to the free shaft calculations discussed below. A pulley made with very thick end discs and rigid shaft attachment devices can result in a shaft deflection significantly less than expected by free shaft calculations. Calculating the load sharing between pulley and shaft is important for reliable design. Pulley constructions and shaft attachment component characteristics vary between CEMA members, so only your pulley manufacturer can determine the actual interaction between components.

CEMA B105.1 and 501.1 are standards maintained by CEMA for the selection of Standard Drum and Wing Pulleys. These standards are based on the use of welded plate constructions with rigid compression shaft attachment devices. They apply to specific ranges of fabric belt widths and belt tensions. As an aid to the conveyor designer, these standards provide a convenient method of selection based on free shaft deflection, with a limit of 0.0023 in/in (0.0023 mm/mm) or 8 minutes.

Pulley manufacturers frequently design Engineered Pulleys to the demands of particular applications. In these situations a deflection limit of 0.0015 in/in (0.0015 mm/mm), or 5 minutes, is commonly recommended. System designers often specify a particular deflection limit. Reference this chapter's Engineered Pulley section for more details.

Constructions outside of the design assumptions built into the CEMA standards require design models and limits tailored to the constructions characteristics. Pulleys with flexible shaft attachment methods, high pressure keyless shaft attachments, and extremely wide belt widths are examples. Safe deflection and stress design limits may vary from those stated in the CEMA standards and should be based on the capabilities of the components. Equation 8.37 is the general case shaft deflection equation when the shaft is larger inside the pulley. Equation 8.38 is derived from the general equation by setting $l = l_2$ and therefore $D = D_2$. Equation 8.38 is used in standards B105.1 and 501.1 for the free shaft deflection for straight shafts.

www.CEMANET.org (c) 2004 Document is NOT to be copied or distributed

$$\tan(\alpha) = \frac{R \times A}{2 \times E_y} \times \left[\left(\frac{C}{I}\right) + \left(\frac{B - 2 \times A - 2 \times C}{2 \times I_2}\right)\right]$$

Equation 8.37
Shaft deflection equation for a two diameter pulley shaft

$$\tan(\alpha) = \frac{R \times A \times (B - 2 \times A)}{4 \times E_y \times I}$$

Equation 8.38
Shaft deflection equation for a single diameter pulley shaft

Where:

A	= Moment arm for pulley [in (mm)]
B	= Bearing centers [in (mm)]
C	= Moment arm for shaft reinforcement [in (mm)]
R	= Resultant pulley load [lbf (N)]
E_y	= Young's modulus [29 × 10^6 psi (200,000 MPa) for steel]
I	= Area moment of inertia of shaft at hub = 0.049087 × D^4 [in^4(mm^4)]
I_2	= Area moment of inertia of shaft inside pulley = 0.049087 × D_2^4 [in^4(mm^4)]
$\tan(\alpha)$	= Tangent of the angle of the deflected shaft and its neutral axis before bending at the pulley end disc [in/in (mm/mm)]

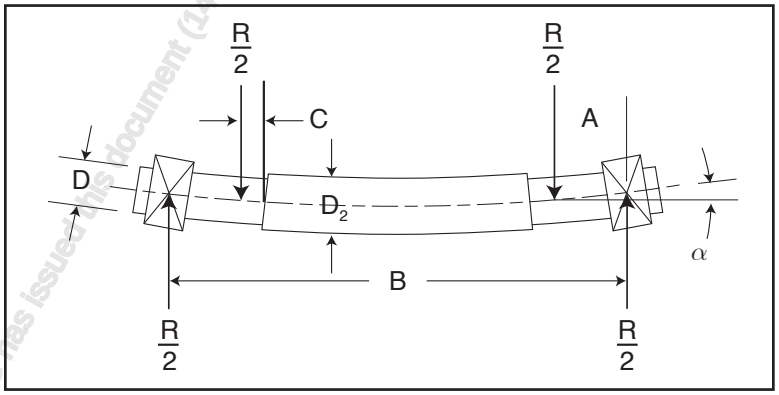

Figure 8.39
Pulley shaft deflection for a dual diameter shaft, reference Equation 8.37

WWW.CEMANET.ORG has issued this document (14604) on Dec 21, 2017 to Pattarapom Sitrakool, Sealuary, , Thailand

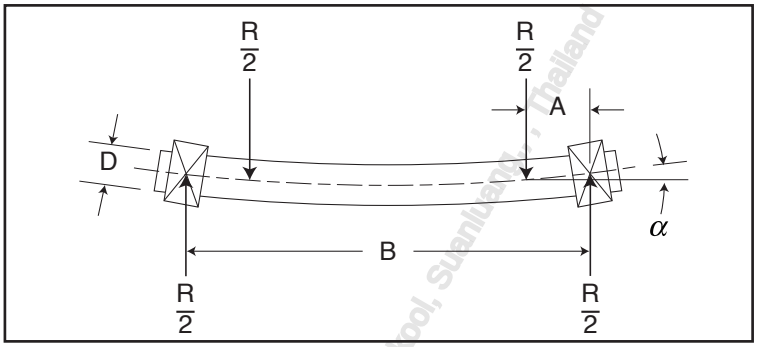

Figure 8.40
Pulley shaft deflection for a single diameter shaft, reference Equation 8.38

BEARINGS FOR CONVEYOR ASSEMBLIES

Bearings for pulley assemblies are needed to allow free rotation of the shaft and pulley assembly and minimize the frictional loss when operating the conveyor. While at the same time, the bearings will maintain shaft and pulley location relative to the other components used on the conveyor. On conveyor systems self aligning mounted bearings are generally used. A mounted bearing simply refers to a self contained bearing assembly that includes a bearing to support applied loading, housing to allow mounting to the conveyor, seals to exclude contaminants from damaging the bearing, and a locking mechanism to ensure attachment to the shaft.

Bearings are designed to support load forces in both radial and axial directions. On drive pulleys, the bearing will need to support the loading from the drive system. Radial loads are forces acting on the bearing at right angles to the center line of the shaft. Radial loads are reactive forces generated by the weight of the shaft, pulley assembly, belt tensions and power transmission attachment reactions. Axial loading are reactive forces acting on the bearings parallel to or in line with the shaft. Axial loading are normally small in nature and are created due to improper alignment of the belt, bearing, drive, or supporting structural members.

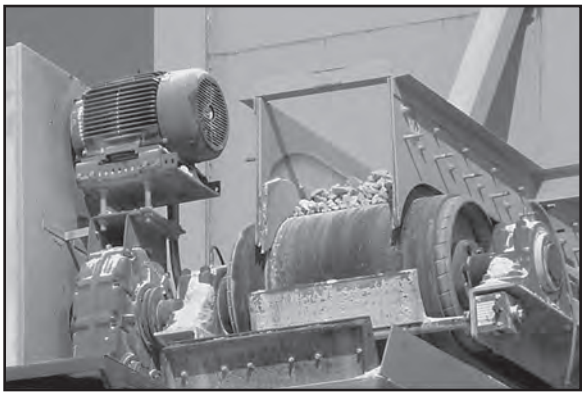

Figure 8.41
Typical conveyor discharge pulley arrangement

WWW.CEMANET.ORG has issued this document (4/4/2014) on 7/24/2014 to Eddy from Siratkool, Suanluang, , Thailand

Mounted Bearing Components

Mounted anti-friction bearings can usually be classified into three groups:

- Ball Bearings
- Taper Roller Bearings
- Spherical Roller Bearings

The name reflects the geometry of the rolling element within the bearing. Ball bearing rolling elements are round in shape (balls) providing a small area of contact (point) with the inner and outer raceway surfaces. Roller bearings rolling elements vary in shape such as cylindrical, conical, tapered or barrel and have a larger contact area with the load carrying surface. The greater the roller contact area the higher the load capability of the bearing. These bearings are referred to as anti-friction due to the low rolling friction created due to the rolling elements that transfer the loads from the shaft to the mounting structure as compared to plain or sleeve type of bearings having sliding friction.

Ball

Ball bearings are typically used on small light duty conveyors. They use balls to carry the applied load and have a small area of contact between the balls and raceway surfaces enabling them to operate at higher speeds with less heat generation. Ball bearings are capable of handling pure radial load, pure thrust load, or a combination of both, but limited due to the contact area. They are suitable for low to high speed applications and, typically, are the least expensive type of mounted anti-friction bearing. Typical mounted ball bearings use a single row of balls.

Tapered Roller

Tapered roller bearings use tapered or conical rollers which provide line contact with mating tapered raceways. Tapered roller bearings support both radial and axial loads, and can carry higher loads than ball bearings due to greater contact area. Typical mounted tapered roller bearings use a double set of rollers. The major disadvantage of tapered roller bearings is their lack of internal misalignment capability. Mounted tapered roller bearing designs do provide provisions for misalignment by either providing internal clearance or allowing the bearing cartridge / insert that contains the tapered bearing to align within the housing.

Spherical Roller

Spherical roller bearings use spherical or barrel shaped rollers and their raceways are spherical shaped also. The contact area is generally oval shaped, and will vary depending on the load being applied. Spherical roller bearings are suitable for applications that require high radial loads and moderate thrust loads, but are not well-suited for pure thrust applications due to the geometry of the components and inherent slipping that occurs. They can be used in low-to- moderate speed applications. Typically there are two design methods used to manufacture mounted spherical bearings;

- Unitized where the bearing is incorporated in a housing or insert.
- Componentized where a bearing is provided as a component that is placed in machined split housing with sealing.

www.CEMAFE.RS assigned this document (2604) on Apr 24 2021 to Pattarapom Chaipong Siriburg., , Thailand

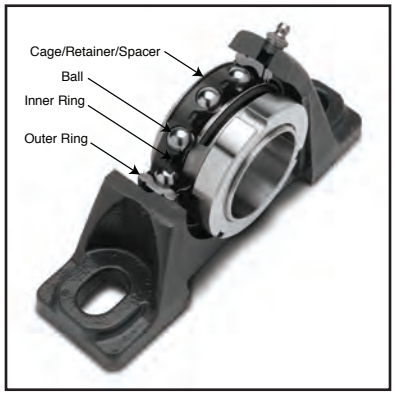

Figure 8.42
Mounted ball bearing



Figure 8.43
Mounted tapered roller bearing



Figure 8.44
Mounted spherical roller bearing

Bearing Housings

Housings are designed to incorporate the bearing rolling elements and raceways to provide easy mounting installation on the conveyor structure and for attachment to the shaft. The housing is designed to transmit the load forces from the conveyor pulley assembly to the supporting structure through the bearing assembly. The housing/bearing design will provide sealing to contain the lubricant for the bearing, keep contaminants out and allow for some shaft misalignment.

Pillow Block

Pillow blocks, the most commonly used housing type, encompass the largest range of bore sizes and are easily adapted to most applications. Pillow blocks have a flat mounting surface on the bottom where bolts are used to secure it to the mounting structure. The housing can be provided with either two bolt (up to 4in (100 mm) shaft sizes) or four bolt (2-7/16in (62 mm) and up) hole patterns for mounting of the bearings.



Figure 8.45
Pillow block with split housing



Figure 8.46
Pillow block with solid housing

Pillow block housings can be manufactured as a solid one piece or split two piece bolted construction. Solid housings are typically used for ball bearing and smaller sized shafting. Split housing allow access to the bearing for removal without disturbing the mounting. Two-piece split housings are machined to ensure proper mating between the two halves and provide proper fit with the bearing element. An alignment pin is normally used to ensure proper location of the halves when reassembling. The housing halves must remain as a pair and should be match marked when taken apart.

WWW.CEMANET.ORG has issued this document (p66) on Apr 25 2018 to Pattarapom Srita

Tapped Base

A pillow block housing that has bolt holes tapped into the base for securing the assembly to the mounting structure. This unit is used where there are space constraints that limit the size of the housing; its overall length is reduced and is commonly used for shaft sizes 2 ½ in (63.5 mm) or less due to the strength of the housing. They are typically used on light duty conveyors.



Figure 8.47
Tapped base bearing housing

Flanged

A flange housing mounts flush against a mounting structure and allows for assembly of mounting bolts in the same direction as the shaft. They are available in 2-bolt through 6-bolt designs that depend on bore size and the required strength of the housing.



Figure 8.48
3-bolt flange bearing



Figure 8.49
4-bolt flange bearing

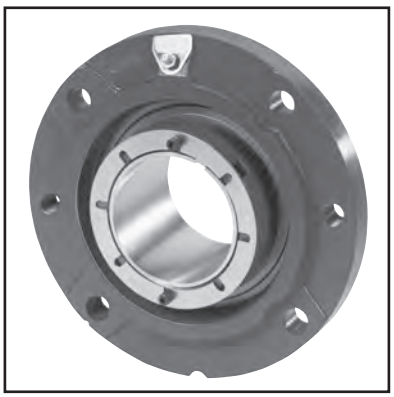

Figure 8.50
Piloted flange bearing

Piloted Flanged

A piloted flange housing is a flanged bearing that uses a pilot on the back of the housing to be inserted into the mounting structure to provide added stability or precision locating. This type of housing is commonly used in 'dead shaft' pulleys where the bearing is located in the end disc of the pulley.

Takeup

These are bearings that are used in takeup frames where the bearing moves parallel to the belt line to provide adjustments in shaft positioning. For conveyor applications take up bearings are commonly used to 'takeup' belt elongation and maintain proper tension on the belt. This is accomplished by manual, hydraulic, or mechanical means.

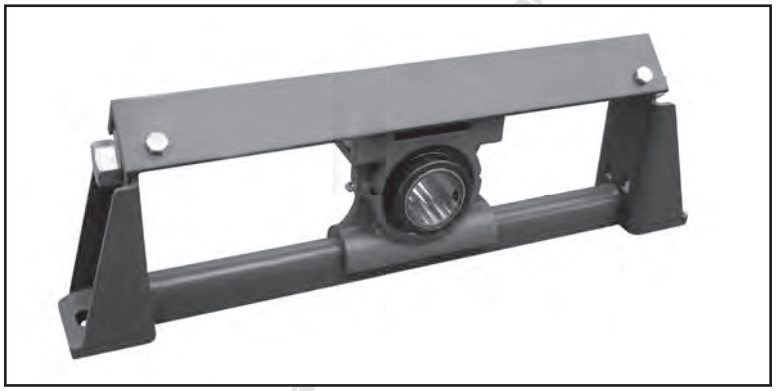

Figure 8.51
Takeup bearing

Expansion

Expansion bearings are used to provide axial adjustment of the bearing within the housing. The adjustment is used to compensate for movement during installation of adapter mounted bearings, shaft growth due to temperature variations or heat from the application, or provide some installation adjustment. All shafts need at least one non-expansion bearing to ensure the shaft and components attached to the shaft are held in a fixed location. These bearing combinations are referred to as expansion/non-expansion or float/fixed bearing pairs. Expansion capability can be provided in each of the housing types.

Housing Materials

Listed below are the materials commonly used for mounted bearing housings. Choice of material to be used is dependent on the application requirements such as applied load, corrosion resistance, temperature capability, and cost.

Cast Gray Iron

This is the most common material used for mounted bearing housings. This material typically provides the lowest cost housing and has excellent machineability properties. Its appearance is gray in color due to the graphite flakes in its structure. Housings manufactured with cast gray iron can be used in a variety of applications from light to heavy loads, and wide range of temperature conditions. The most common grade utilized has a 25,000 to 30,000 psi (172 to 207 MPa) ultimate tensile strength.

Cast Ductile Iron

This material is used in applications with higher load requirements. Higher ductility properties can be a benefit in applications with high shock or intermittent loading conditions. It has higher elongation values than gray iron due to its ductility. Material strength ranges from 60,000 to 120,000 psi (414 to 827 MPa) tensile depending on the grade (class) of material used. Ductile iron castings are more suitable to be used in low temperature applications, below -40° F (-40°C).

www.CEMA.ORG No issued this document (1400) on Apr 21, 2017 to Pa... , , Thomson

Cast Steel

Ideal for rugged heavy duty applications and accepts shock and heavy loads. They dissipate heat well, but are more costly than housing made from cast iron. The most common grades have a 65,000 to 140,000 psi (448 to 965 MPa) ultimate tensile strength. Cast steel has the highest elongation percentage providing excellent shock resistance.

Stainless Steel

This material is used in application where corrosion resistance is required, generally in the food and beverage industries where the housings are exposed to daily wash downs. Although used more for its corrosion resistance it can provide a high strength housing as its typical tensile strength is 70,000 psi (483 MPa). Although the material is stronger in nature, housings may not have incorporated the additional strength in its design when compared to cast iron. Housings may have smaller cross sectional areas and equivalent load capabilities when compared to similar sized bearings.

Polymer Housings

Polymer materials are use to provide a low cost corrosion resistant housing. Due to a variety of polymers and addition of fiberglass or other materials, housing strengths can have a large variation. Tensile strengths can range from 500 to 5000 psi (0.35 to 35 MPa).

Aluminum Alloy

Some manufacturers provide housings made from aluminum. These are generally produced semi-finished requiring only some finishing of the bearing features to minimize manufacturing expense. These housing are normally available only in smaller shaft size ball bearings, 2-inch (50 mm) and below. Housing strength is slightly less than cast gray iron 15,000 to 25,000 psi (103 to 172 MPa) range.

Shaft Attachment Methods

Mounted bearings are slip-fitted over a shaft when installed and must be secured to the shaft to ensure that the bearing rotates in unison with no slip. Whenever there is any relative movement or slip between the bearing and shaft, wear and damage will occur. Bearing life can be dramatically reduced depending on the application. Fretting corrosion, heat, wear, and ultimate failure can occur. There are several methods of securing a mounted bearing to a shaft. Each method has its limitations in reliability and costs (both cost of the product & cost of installation) and should be considered when selecting a bearing.

Set Screw

Set screw attachment is a simple method and most often used on light to medium duty applications with shaft sizes 6 in (150 mm) and less. This attachment method incorporates setscrews that are directly threaded into the inner ring or locking collar of the bearing and seat into the shaft to provide a positive engagement. Setscrew locking bearings are easy to install; place the bearing in position on the shaft and tighten the set screw. Their performance is directly dependent on the clearance between the bearing and shaft, speed, and loading. Clearance results in relative movement between the components. Wear will occur and will cause stress on the set screw and its ability to hold to the shaft. Loading is a direct function of the set screw's ability to support the load imposed on the bearing. Speed may cause vibration problems due to eccentric movement created by the clearance.

WWW.NEWAGE-IRG has granted a document (1649) on Apr 24, 2017 to Pattarapol Chitakong Chanluang, , , Thailand

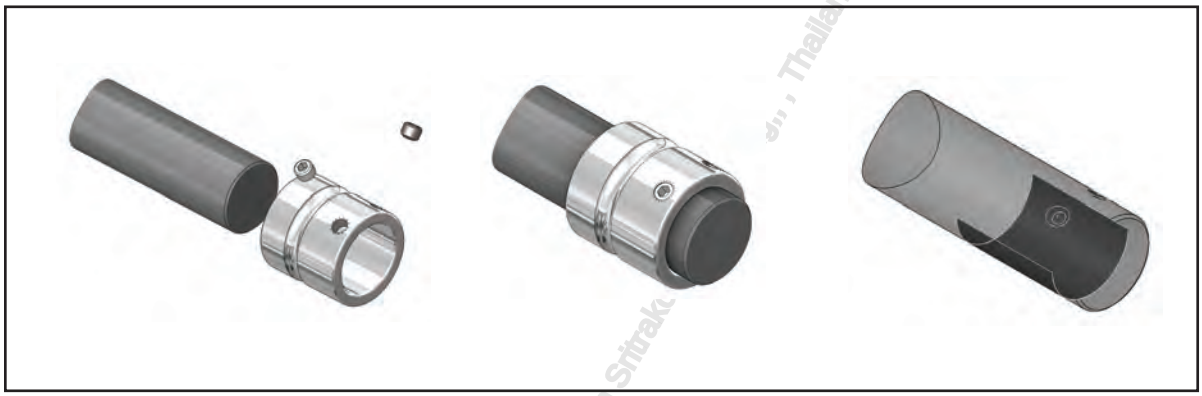

Figure 8.52
Set screw attachment method

Figure 8.52 shows the inner ring of a ball bearing with set screw mounting. The left image shows a bearing inner ring (other components of the bearing have been removed for clarity), shaft and set screw. The middle image shows the bearing ring attached to the shaft by tightening of the set screw through the inner ring of the bearing. The highlighted areas on the right image shows the resultant contact area between the shaft and bearing after tightening, arc of contact opposite of the set screw location, and area under the set screws.

Eccentric Locking Collar

The eccentric locking mechanism uses a cam design to create a wedge effect and secure the inner race to the shaft. The cam action is created by the eccentricity of the inside diameter of the locking collar in relation to the engaging extension of the inner ring of the bearing. A single setscrew in the lock collar assures the retention of the collar's position by threading through the collar into the shaft. An eccentric collar locking mechanism has the same advantages and disadvantages as setscrew locking bearings, but is also limited to non-reversing applications.

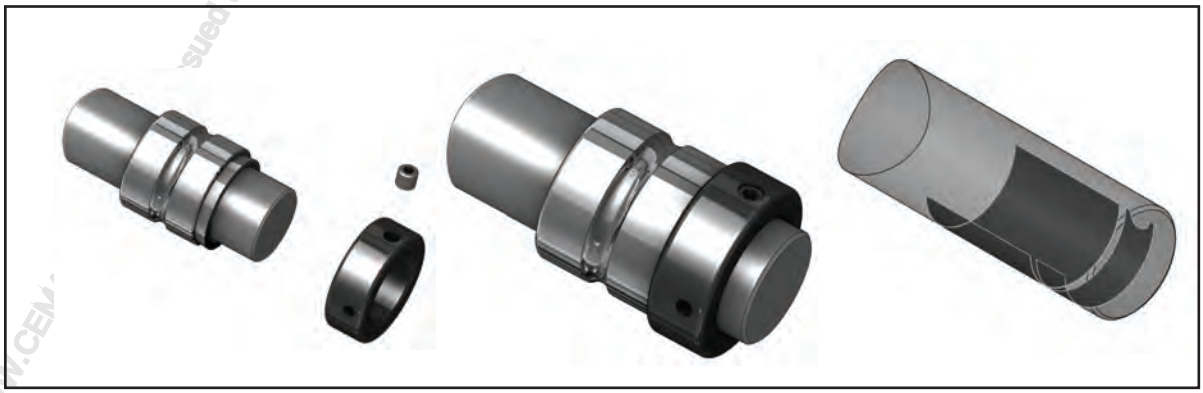

Figure 8.53
Eccentric locking collar attachment method

Figure 8.53 shows an inner ring of a ball bearing with the eccentric locking collar attachment. The left image shows the ring slipped on to the shaft, and the locking collar with set screw. The middle image

shows the collar attached to the inner ring of the bearing and tightened by rotating the eccentric lock collar relative to the inner ring of the bearing. The image on the right shows the contact area that results between the shaft and bearing. The larger highlighted area is the resulting area of contact between the bearing and shaft. The smaller highlighted area is the area of contact between the locking collar and shaft.

Concentric Locking Collar

This locking method uses a split concentric collar with one or more clamping screws. The clamping collar fits over an extension on the inner ring of the bearing that has radial slots machined into it. When the bearing is in the proper location on the shaft, the lock collar cap screws are tightened to close the collar, compressing the inner ring to affix the bearing to the shaft. It locks the shaft in a 360 degree contact pattern, and centers the shaft in the bearing bore. This method of attachment relies solely on friction and is limited in axial (thrust) holding. No set screws are used.



Figure 8.54
Concentric locking collar attachment method

Figure 8.54 shows an inner ring of a ball bearing with eccentric locking collar attachment. The left image shows the bearing inner ring slipped on to the shaft, and the locking collar with a cap screw. Observe the slotted end of the inner ring. The middle image shows the collar attached to the inner ring of the bearing and mounted to the shaft. Tightening of the cap screw compresses both the locking collar and the inner ring extension securing the bearing to the shaft surface. The image on the right shows the contact area, that results between the shaft and bearing that is mainly where the locking collar is located.

Taper Adapter Sleeve

This method of attachment uses a split tapered adapter sleeve placed in the bearing inner ring that is machined with a mating tapered surface. The small end of the tapered sleeve is threaded to accept the locking collar. The locking collar is used to draw the tapered sleeve up into the bore of the bearing to wedge the sleeve between an inner ring bore and the shaft. This locking method excels at centering the shaft in the bearing bore providing a 360° locking surface. This method of attachment is the only type that ensures full contact of the bearing with the shaft and minimizes fretting corrosion due to relative movement of the components. To prevent the lock collar from loosening a set screw, lock washer or locking plate is inserted between the end of the bearing and the inside surface of the locknut. This method of attachment relies on friction and clamping force from the locking collar to provide compressive forces to retain the bearing to the shaft.

www.CENGAGE.COM/ORS has issued this Student (4460),



Figure 8.55
Tapered sleeve attachment method

Figure 8.55 shows the split tapered sleeve adapter mounting attachment. The image on the left shows a split tapered sleeve, the inner ring of a ball bearing with mating tapered bore surface, and a locking collar. The middle image shows the collar attached to the inner ring of the bearing and mounted to the shaft. Rotating the locking collar draws the sleeve into the bearing inner ring and compressing onto the shaft to secure the unit to the shaft. The image on the right shows the resultant 360° and full length of the sleeve contact area, highlighted.

Press Fit

Some mounted bearings rely on an interference fit of the bearing onto the shaft. The bearing is normally located on the shaft initially and then set into the bearing housing. The amount of interference is dependent on the type of bearing and the application. The press fit is achieved by either forcing / pressing the bearing onto an oversized shaft or by heating the bearing to expand the bore until it can be easily installed over the shaft. After cooling, the bearing will shrink around the shaft and a press fit will be achieved. One advantage of a press fit is its concentric 360˚ lock. In addition to a difficult installation process, the main disadvantage of a press fit is that it requires a precision machined shaft, placement of shaft shoulders or collars to retain the axial location of the bearing, and is extremely difficult to remove from the shaft.

Seals

There are multitudes of sealing types available for mounted bearing units with the selection based on the bearing application requirements. Seals can be made from a variety of materials and special designs can be designed for the application requirements. Seals are used to retain lubricant in the bearing and to prevent contamination from entering the bearing. Seals used on grease lubricated bearings are normally designed to allow excess grease to purge out of the bearing, purging both contaminant and spent grease out of the seal chambers and away from the seal area. Following are the most common seals available on mounted bearings.

Contact

Contact seals typically incorporate a resilient flexible rubber component that completely closes any path for contaminants to pass through to the bearing. The flexible element will always make direct contact with a bearing component and has relative movement capability to allow misalignment of the bearing. Usually, contact seals are arranged in single or multiple combinations and are best suited for both wet and dry

www.GEARTECH.com has issued this document on Apr 24, 2017 to tabatom Sritrakool

environments under slow to moderate speeds. Contact seals can be bonded to a steel carrier or can be an independent component that is placed in a groove machined in the housing.

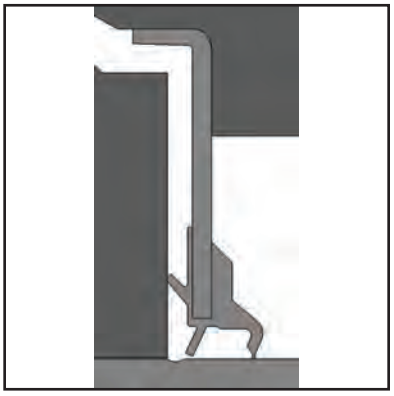

Figure 8.56
Contact seal with carrier



Figure 8.57
Contact seal without carrier

Copyright CEMA (Conveyor Equipment Manufacturers Association) Provided by IHS Markup to Patterapon Thongsuk (14604) on Mar 04 2017

Labyrinth

A labyrinth seal is a non contact seal with no rubbing components. The sealing is provided through a complex maze normally filled with grease. This maze blocks easy passage of contaminant into the bearing or lubricant out of the bearing. A labyrinth seal will typically have two components a ring attached to the rotating shaft and a stationary mating component. The rotating ring acts as a flinger to expel elements away from the entrance to the sealing surface due to centrifugal forces.

Taconite Duty

Taconite duty seals are designed to keep out fine abrasive particles from contaminating the bearing components. This seal utilizes three separate elements:

- An inner seal to keep the lubricant in the bearing
- An outer seal that would keep contaminates from getting into the bearing
- A re-greaseable chamber located between the two seals trapping any contaminants that may have entered through the outer seal.

This type of seal is used in applications that produce fine abrasive particles, such mineral and aggregate processing (coal, copper, lime, potash, rock quarry, granite, etc). Manufacturers have designed these "taconite seals" or auxiliary seals to fit into standard housing by placing a rubber O-ring between the outer surfaces of the seal and clamping it in the seal grooves of the housing. The clamping of the rubber provides a positive seal to prevent any wear or allow contamination to get into the bearing from the environment. Lubricating the seal will purge contaminants out of the chamber before they can enter the bearing.

The use of these seals generally results in an additional overall length to the bearing which limits it's misalignment capability. This additional length can affect the bearing center locations, design of the shaft and pulley components. The reduced misalignment capability requires that the bearing housings be aligned to tolerances that are tighter than CEMA recommends in the Appendix "Conveyor Installation Standards For Belt Conveyors Handling Bulk Materials'.

Felt

This seal is an industry standard economical seal. It provides a barrier to keep lubricant in the bearing and contaminants out. It uses a strip of woven felt material that is placed in a machined groove of the housing or can be sandwiched between seal retainers. The felt provides a rubbing contact surface to maintain contact with the shaft or seal retaining plates. The felt can be soaked in oil to prevent liquid contaminants from being absorbed by the felt material.

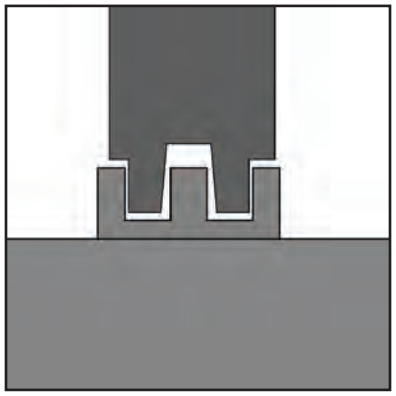

Figure 8.58
Labyrinth seal

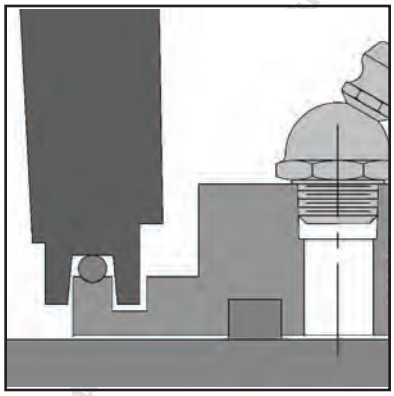

Figure 8.59
Taconite duty seal

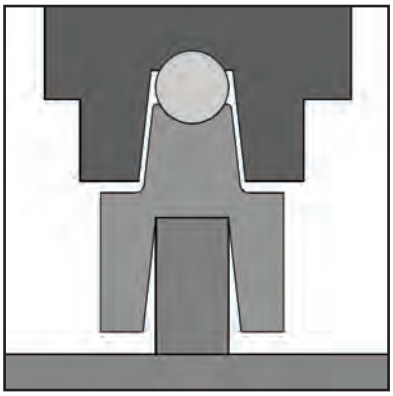

Figure 8.60
Felt seal

Bearing Loading And Life Loading

Bearings are used to support application loads that result from the weight of the shaft and components attached to it, and the reaction forces that result from the power transmission through the components. Bearings have a load rating that is calculated based on allowable stress limits that can be applied to the bearing components to provide adequate life. The life of the bearing is directly related to the load applied, speed of rotation and quality of lubrication. Lubrication provides an oil film on the contact surfaces to prevent metal to metal contact to reduce wear and heat. Bearings operated with inadequate lubrication will experience unacceptable bearing life.

Applied load can take many forms including radial loads, thrust loads, peak loads, shock loads and vibration loading. A complete analysis of the direction and magnitude of the load is necessary in order to make an accurate bearing selection. Bearings have published load ratings that are used to determine an estimation of operational life when properly applied and lubricated. Manufacturers provide charts or calculations to assist users in the life calculations. Users can specify bearing life requirements based on these calculations.

Dynamic Capacity, C

The dynamic capacity of the bearing is the published load rating that a bearing can withstand in operation for a material fatigue life of one million revolutions with a 90% survival rate. The rating is calculated, based on ISO 281:2007 Standard for the Calculation of Bearing Ratings and Life, and is based on design parameters of the bearing such as:

- Material used for the bearing components
- Size of the rolling elements,
- Number of rolling elements
- Number of rows of elements
- Length of the rolling element

- Pitch diameter of the element set
- Rolling element contact angle

Material fatigue occurs as spalling where flakes of metal are broken out of the raceway surface. Some taper roller bearings are rated based on 90 million revolutions, C_{90}. To compare basic dynamic capacities of tapered roller bearings with C_{90} to ball, tapered or spherical bearings with C ratings use a factor of 3.857.

$$C = 3.857 \times C_{90}$$

Equation 8.61
C, Dynamic rating comparison

Where:

C = Dynamic load rating for ball, tapered and spherical bearings, 1 million revolutions
C_{90} = Dynamic load rating for tapered roller bearings, 90 million revolutions

Static Capacity C_0

The static capacity is the published load rating of the bearing that the bearing can withstand statically. At this rated load the raceways will permanently brinell or deform.

L_{10} Life

L_{10} is a statistically calculated estimation of operational life of the bearing based on the applied load, speed and rated capacity attained by 90% of a statistically similar group. L_{10} is the fatigue life of the bearing and assumes an ideal environment where lubrication is performed as specified.

$$L_{10} = \left(\frac{C}{P}\right)^{3.0} \times \frac{16{,}667}{rpm}$$
Ball Bearings

$$L_{10} = \left(\frac{C_{90}}{P}\right)^{\frac{10}{3}} \times \frac{1{,}500{,}000}{rpm}$$
Tapered Roller Bearings (C_{90})

$$L_{10} = \left(\frac{C}{P}\right)^{\frac{10}{3}} \times \frac{16{,}667}{rpm}$$
Tapered Roller Bearings (C) and Spherical Roller Bearings

Equation 8.62
L_{10}, Bearing statistical life in hours

Where:

C = Dynamic load rating for ball, tapered and spherical bearings, 1 million revolutions
C_{90} = Dynamic load rating for tapered roller bearings, 90 million revolutions
P = Equivalent load
rpm = Revolutions per minute

Equivalent Load

Equivalent load, P, is the calculated single value load as a function to the actual applied radial and thrust load, and the bearing geometry. The equivalent load is utilized to calculate the fatigue L_{10} life for the bearing. When a bearing has no thrust loading, the actual radial load is used for the equivalent radial load. If the bearing has both radial and thrust loads, they both must be converted into an equivalent radial load that is dependent on the type of bearing used and its design parameters.

UNCONTROLLED COPY. This document (1460A) dated Aug 04, 2017 to Chaiyaporn Srimalee, Suanluang, , , Thailand

$$P = (X \times F_R) + (Y \times F_A)$$

Equation 8.63
P, Bearing equivalent load

Where:

F_A = Thrust load
F_R = Radial load
P = Equavalent load
X = Radial load factor, obtain from bearing manufacturer for specific bearing
Y = Thrust load factor, obtain from bearing manufacturer for specific bearing

www.KMUTT.THINGIVERSE.COM Document Created Date: Apr 25, 2017 by Patcharapon Suthikool, Suanluang, , Thailand

Bearing Selection

After a thorough analysis of a bearing's end use, the type of bearing to be used in a specific application is often the first decision to be made. Understanding the advantages and disadvantages of each bearing type is essential in this decision. Always keep in mind that the manufacturer's literature is extensive and should be consulted in making final decisions. The following sections provide additional insight.

Expansion Capability

When selecting the proper bearing, a determination must be made as to whether the application requires the use of expansion type bearings. Adapter mounted bearings require expansion to allow for axial movement when tightening the unit to the shaft. Under no circumstance should all bearings on the shaft be expansion type bearings, one 'fixed' or non-expansion bearing must be used to maintain stability for the shaft to keep it from moving axially during operation.

Environmental Operating Conditions

Environmental conditions can play a role in the determination of which type of bearing, i.e., tapered, spherical or ball, but plays a much more significant role in the options that can be incorporated with each type of bearing. For example:

- Seal type and configuration
- Grease type and amount of grease fill
- Special bearing and housing coatings
- Special bearing hardware, i.e., stainless or other corrosion resistant materials

Bearing Handling and Installation

All bearings are sensitive to improper storage and handling. All bearings should be stored in a cool dry area. Often the manufacturer supplies a bearing in packaging designed to protect unused bearings from the effects of humidity, handling and exposure to contamination. Keep the bearings in their original packaging until ready for use. Mounted bearings usually come with a factory packed lubrication, oil, or rust preventative that also will protect the bearing. If the bearing does not have any factory lubricant, covering the bearing with an additional light coating of a rust preventative may extend the storage life of the bearing. When a bearing remains in storage for an extended period of time, the manufacturer's recommendations should be followed

Bearing Alignment

Bearing alignment is important and has a dramatic effect on performance and service life. Misalignment can lead to premature bearing failure that would result in non-uniform loading of the rolling elements, high operational temperatures and vibration. Misalignment, normally measured in degrees, can originate from any one of several causes, but is usually attributed to improper installation. Most mounted bearings are provided with allowances for misalignment and are termed "self-aligning." The manufacturers' literature will identify those bearings and their degree of acceptable misalignment. The various forms of misalignment are identified below:

Static Misalignment Conditions :

- Bearing and shaft axis not co-linear
- Bearing supports not on same plane in both vertical & horizontal axis
- Deflection misalignment – shaft bending in a fixed direction due to load
- Bearing installation issues

Dynamic Misalignment Conditions:

- Bent shafting
- Unbalanced rotating load (eccentric load)
- Bearing installation issues

Most mounted bearings are designed with the ability to statically misalign however, only spherical roller bearings can dynamically misalign; Spherical roller bearings misalign internally to the bearing, while most ball and tapered roller bearings misalign externally between the bearing elements and the housing.

Bearing Foundations

Bearings must be mounted to firm, fixed and aligned foundations or premature bearing failures may result. The bearing housing must be secure or the bearing alignment may not be maintained. Proper housing bolt tightening torque is essential especially under heavy loads. Housing shear bars may be used to keep the housing from shifting on the mounting surface and applying a shear load on the mounting bolts.

Housing foundations must be flat and smooth. If a mounting surface is not true, the housing may be forced into an out-of-round condition that can "pinch" a bearing insert, or cause housing fracture during installation or later during bearing operation. A pinched bearing insert may cause the bearing rings to become out of round and may result in accelerated bearing wear, overheating, noise, and, ultimately, bearing failure.

The plane of the foundation mounting surface must be parallel with the shaft centerline. Most housing seals limit the angular misalignment of these two features. Misaligned or flexible foundations will misalign housing seals. When seal clearances are compromised excessive heat and wear often result in component damage and rapid bearing failure. Tapered or thin film shims are commonly used to compensate for misaligned foundations. When doing this it is important to maintain support in the housing load zone and bolt locations. Refer to Appendix D, Conveyor Installation Standards For Belt Conveyors, for further guidance.

Recommended Shaft Diameters

It is essential to adhere to the bearing manufacturer's recommendations for shaft size and tolerance. Proper shaft size and tolerance ensures that the bearing is secure to the shaft and to provide the expected life. Undersized shafting can cause the shaft to rotate in the bore of the bearing or locking mechanism.

www.CEMAnet.org has issued this document to Pattarapom Smaipol, Suanluang, Thailand on Apr 22, 2014.

This will cause wear, heat, vibration, and eccentric movement during operation. Oversized shafting may cause a reduction in the internal clearance of the bearing leading to internal wear and heat generation of the bearing.

Setting Bearing Clearance

Most mounted bearings have the proper internal clearance set in the bearing at the factory. However, on spherical roller bearings that are provided without housings the internal clearance is set during the mounting procedure. The bearing clearance must be measured before and after installation to the correct measurements as provided by the manufacturer's installation manual. The proper bearing clearance must be achieved to prevent premature failures.

Fastener Maintenance

The process of inspection, maintenance, and assembly of mounted bearings will invariably involve the use of threaded fasteners. A manufacturer's fastener selection is based largely on the application, with some consideration for cost or availability. Many of the recommended fasteners used are specialized as to type, design and material.

Fastener Torque

The tightening torque is directly related to the resultant fastener clamping force and is limited by the strength of the fastener and the mounted bearing housing. The bearing manufacturer's fasteners and fastener torque recommendations must be followed during initial mounting and subsequent maintenance or fastener and bearing failures will likely result.

Bearing Lubrication

Lubrication is essential to achieve ultimate life from the bearing. Lubrication is used to:

- Reduce friction between the rolling elements and raceways by providing an oil film thickness that separates contact surfaces and their irregularities.
- Reduce wear by providing oil film thickness to prevent metal to metal contact of the bearing components.
- Removes heat generated by friction and wear.
- Protects internal bearing components from contamination and corrosion.
- Provides lubrication to the seals reducing wear and heat.
- Assists in excluding contamination from the bearing.

Lubrication can be either oil or grease. Most mounted bearings use grease because it is easier to retain in the housing and to maintain in application. Grease is a combination of oil (80 to 90%) and a thickener for suspension. Lubricants contain additives that provide additional properties for improved performance and life, such as wear resistance, corrosion protection, oxidation inhibitors, stabilizers and oil film enhancements.

When selecting a lubricant it is important to choose the correct type of thickener, oil viscosity, oil type and grade. There are a variety of thickeners used and is the major source of incompatibility issues. Mixing of different lubricant types can cause chemical reactions in the bearing that are detrimental to the life of the bearing. Oil types can be either petroleum / mineral based or synthetic. Mixing of oil types normally is not an issue. When re-lubricating bearings it is always best to use the same lubricant.
Oil viscosity is a measurement of the fluids resistance to flow and will change depending on its operat-

www.CHAIRORG.com Issued to: Duncan (1604) on Apr 21, 2017 to Pattamaporn Sritrakool, Chulalongkorn, , Thailand

ing temperature and pressure exerted on to it. In general, lubricants with low viscosity oils will be more fluid and will establish a smaller oil film thickness than a lubricant with high viscosity oil. As temperature increases viscosity of the oil will decrease and become more fluid and its oil film thickness will decrease. Oil film thickness is the layer of oil that separates the rolling elements from the raceways preventing metal to metal contact. Lubricants with low viscosity oils are more suitable on high speed, low load applications, where as lubricants with high viscosity oils are more suitable for low speed, high load applications. Lubricants with too low oil viscosity will allow metal to metal contact while lubricants with too high viscosity will cause the rolling elements to skid creating heat and wear. It is important to choose the lubricant with the correct viscosity for the application. Lubricant and bearing manufacturers will provide recommendations and information is included in their instruction manuals.

Grease lubricants are provided in different consistencies and are defined by their NGLI number ranging from 000 which is almost like water in consistency to number 6 which is very 'solid like'. The NGLI number and oil viscosity are independent and have no relationship to each other, I.e., you can have a grease with high consistency (thick and heavy) but contain a very fluid oil, it depends on the chemical makeup during the formulation of the lubricant.

Rolling element bearings are often provided with an initial grease charge that allows installation with little or no addition of grease before operation. Most mounted bearings will include a grease or zerk fitting to allow re-lubrication of the bearing. After a period of operation it will be necessary to add lubricant using a grease gun or a pressurized grease injection system to renew the lubricant and flush away contaminants. It is normally recommended on conveyor applications due to their relatively low speeds to 100% fill the bearing upon installation to get maximum protection from contaminants and to ensure lubrication of the seals. When re-lubricating ensure that clean grease is purged from the bearing and seals, as most mounted bearing designs are capable of purging without damage to the seal or bearing.

Bearing Failures

Bearing failures can be minimized when properly sized, installed and maintained. Incorporating proper lubrication techniques in a preventive maintenance program and following the bearing manufacturer's installation and instruction manuals are essential to achieving longevity of the bearing. Bearing failures can be related to loading, installation, or manufacturing issues. Roughly 80% of all bearings failures are lubrication related. The following list shows the most frequently encountered lubrication failure modes:

- Wrong type of lubricant selected for the application.
- Improper viscosity of the lubricant selected for the application
- Insufficient amount of lubricant in the bearing
- Inadequate re-lubrication frequency
- Inadequate amount of lubricant added when re-lubricating
- Contamination of the lubricant
- Seal failure due to inadequate lubrication
- Use of incompatible lubricants

Other common causes of bearing failures that are application related can be due to the following:

- Excessive misalignment induced to the bearings.
- Inadequate bearing clearance or setting
- Improper shaft sizing
- Wrong bearing or seal type selected for the application
- Improper installation mounting and/or handling of the bearing during installation

WWW.NEWNESDIGITALLIBRARY.COM (14604) 21 Apr 2017 10 Patterapol Sirikool, Siam University

PULLEY TERMINOLOGY

The CEMA Pulley Committee has approved the following terminology to standardize Pulley Components, End Disc/Hub Configurations and Weld Configurations.

Pulley Components

The basic components of a drum pulley are identified in the pulley cross section in Figure 8.64.

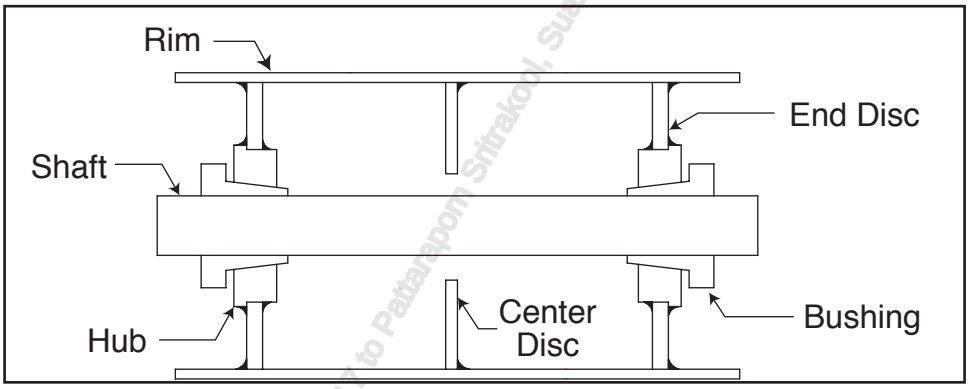

Figure 8.64
Basic pulley components

End Disc/Hub Configurations

The common end disc / hub configurations are defined in Figure 8.65. The most common configuration used in CEMA pulleys is the Welded Hub. The other configurations are used more in Engineered Pulleys.

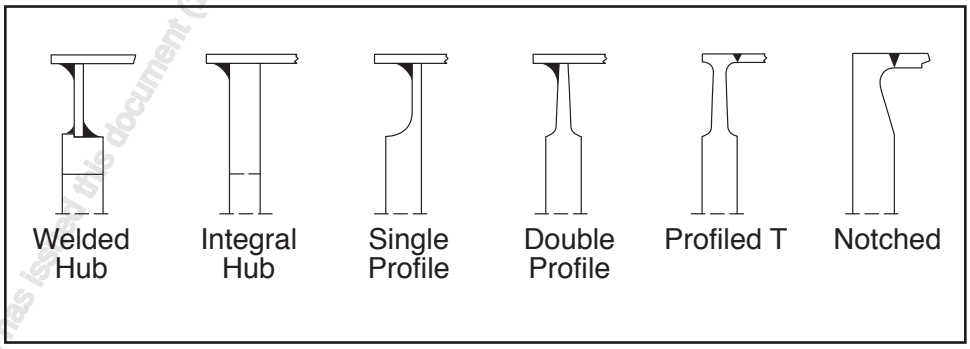

Figure 8.65
Pulley end disc/hub configurations

WWW.CEMANET.ORG has issued this document (1440) on Apr 24, 2017 to Pattarapon Sritrakool, Suanlung, , , Thailand

Weld Configurations

The common weld configurations are defined in Figure 8.66. The most common welds used in CEMA pulleys are the Fillet Weld for the end disc to rim connection and the Groove Weld with Back-up for the rim seam weld. The other configurations are used more in Engineered Pulleys. For more detailed information on welds, see AWS D1.1 or AWS D14.6.

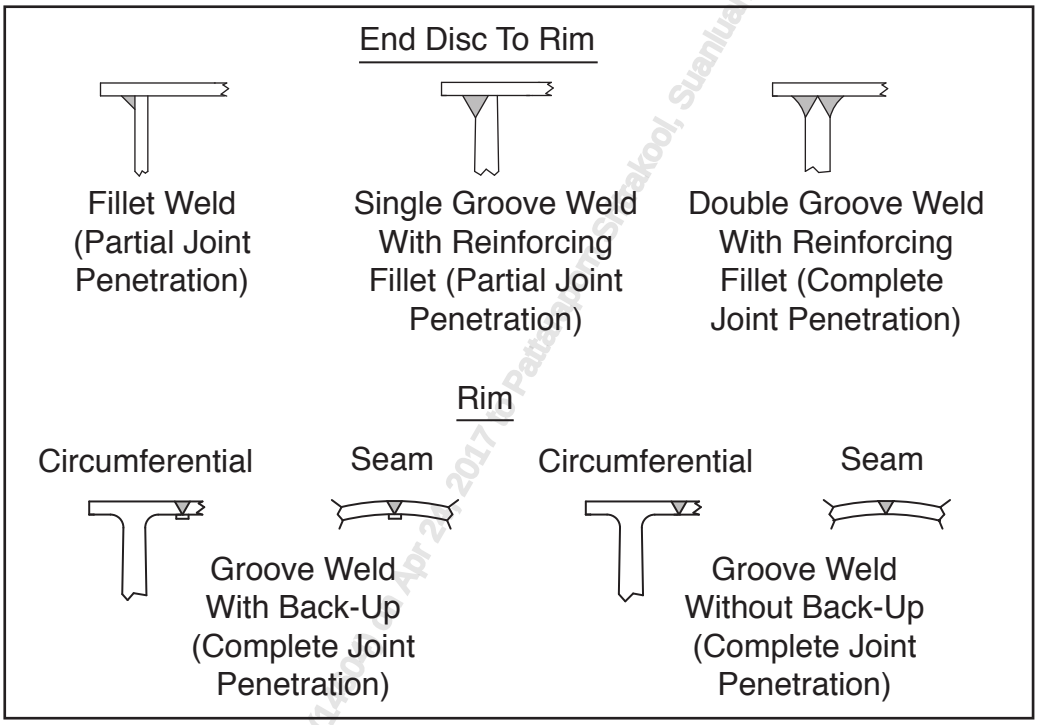

Figure 8.66
Pulley end disc and rim weld configurations

UNCONTROLLED COPY as issued. This document (4200 ...) is Apr 2 ... 2017 to Pattaya ... School, Suanluang, , Thailand

SPECIAL PULLEYS

These special pulleys are not covered by any CEMA standards. They are included to let you know they are available and to give some general information on what they are and why they are used.

Dead Shaft Pulleys

Dead shaft conveyor pulleys are designed with non-rotating shafts. The construction typically uses a drum or wing pulley designed to accept bearings for shaft attachment, rather than the typical hub and bushing connection. Rigid mounting blocks are then used for conveyor frame attachment. These can include pillow block, manual takeup, and flange type arrangements. Dead shaft pulleys can be used in nearly all conveyor applications and pulley positions. The non-rotating shaft can make them a preferred choice where weight, safety, or dust control sealing is an important design consideration. Pulley locations requiring torque transmission are typically avoided, due to the non-rotating shaft, i.e. drive, brakes, backstops. Regulations in specialized industries should be considered in the selection, some grain enclosures require external bearings. Design of dead shaft pulleys is similar to the process detailed in CEMA B105.1 and 501.1. Modifications to these standards in the areas of shaft stress analysis and shaft deflection can provide safe designs. Consultation with your CEMA pulley manufacturer for proper dead shaft pulley design is recommended.

CEMA pulley specifications use a fatigue design method and stress limits for rotating shaft selection. Since a non-rotating conveyor pulley shaft is primarily under stationary load an appropriate stationary design method and stress limits may be substituted. Typically stationary stress limits can be higher than fatigue stress limits, which means that dead shaft designs may be safely designed with smaller diameter shafts.

CEMA pulley specifications use shaft deflection limits to control the bending moment transmitted to the pulley and to control the possibility of axial pulley movement along the shaft. Many ball or spherical roller bearings used in dead shaft pulleys have some ability to mis-align without transmitting a significant bending moment to the pulley. Tapered roller bearings have limited misalignment capability and should be considered differently. These misalignment capabilities can safely allow higher shaft deflection limits at the pulley. In addition, since the bearings inner race to shaft connection is stationary the likelihood of axial pulley movement along the shaft is significantly reduced.

Magnetic Pulleys

Magnetic pulleys are a type of magnetic separator. They are drum pulleys located at the head or discharge of the conveyor. Magnetic pulleys are used in conveyors to automatically and continuously remove iron contamination and "tramp" ferrous materials like hammers, bolts, reinforcing bars and spikes from the pay load, be it wood chips, crushed stone, etc. This protects expensive process equipment like cone crushers and wood chippers. See Chapter 11 for more information on magnetic separators.

Motorized Pulleys

This chapter deals mainly with conventional conveyor pulleys. Normally the shaft from one of the pulleys of a conveyor is mounted on bearings and driven by an externally mounted motor through various power transmission components such as gear reducers, belt drives, chain drives, and couplings. This conventional arrangement is a live shaft configuration. That is, the shaft rotates.

It has been found advantageous in some applications to replace all of these components with a Motorized Conveyor Pulley. On the outside, a motorized conveyor pulley appears as a conventional pulley with wires coming out of one of the shaft ends. However, on the inside is a motor and gear set which drive the pulley at a specific speed. The shaft does not rotate and is normally supported by mounting blocks, which usually resemble bearing pillow block housings without the bearings.

Since the motor and gearing are assembled inside the drum of a motorized pulley, they must be purchased for a specific motor voltage and belt speed. Backstops and brakes are usually available as options, and some models may be disassembled for the repair of internal components. Motorized conveyor pulleys tend to be more expensive than the sum of components they replace, however they take up less space than conventional drives, and require much less assembly time and skill than their conventional counterparts. See Chapter 13 for more information.

Spiral Pulleys

Spirals can be added to drum pulleys and wing pulleys. It is more common to have a spiral wing pulley than a spiral drum pulley. Spacing between spiral bars creates intermittent support of the belt. Belt bottom cover damage has been observed when wide spacing is used. Maximum unsupported width is a function of the belt properties and belt tension. For most applications, limiting the space between the bars to 3 inches (75 mm) will not cause damage. Belt damage can also occur if the bars are too narrow. This can cause the contact pressure between the belt and the bar to be too high. Currently, there is no generally recommended minimum contact area. Contact your belt manufacturer for your specific application.

www.BANDELconveyor.com Issued to Department (1460) on Apr 24, 2017 by Joel Brom Smith (Joel Brom Smith), Thailand

Spiral Wing Pulleys

Care must be used when applying a wing-type tail pulley, because the intermittent, on-again, off-again contact pattern between the "wings" and the belt can impart an up-and-down fluctuation to the belt line. This vibration makes it difficult to effectively seal the loading zone, resulting in additional material spillage. The effective diameter of a Wing-Type Pulley is often smaller than the nominal diameter and this must be taken into consideration when selecting the belt. Wrapping a band of steel in a spiral around the wing pulley allows the pulley to provide the self-cleaning benefit without creating oscillation in the belt line or reducing the effective diameter. See Figure 8.67.

Spiral Drum Pulleys

When the tensions are too high to use a spiral wing pulley and you still need the cleaning action that a spiral wing pulley provides, spirals can be added to drum pulleys to auger the material from the center of the pulley to the edges. The spirals on the drum pulleys are much thicker than the one used on wing pulleys to create an area for the material to travel through. See Figure 8.68.

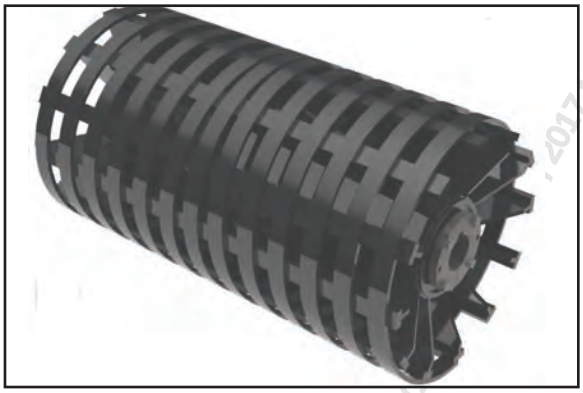

Figure 8.67
Spiral wing pulley

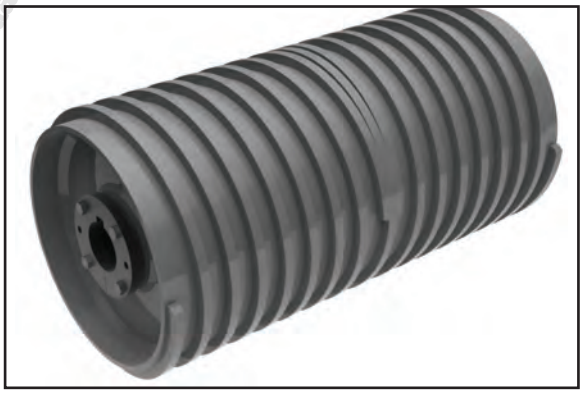

Figure 8.68
Spiral drum pulley

Stub Shaft Pulleys

Stub shaft conveyor pulleys are designed with a relatively short stub shaft on each end of the pulley. These stub shafts typically extend into the pulley a short distance and terminate with a significant portion of the pulleys internal length void of shafting. Shaft to pulley attachment is generally accomplished by welding in the shaft or bolted connections.

Stub shaft pulleys can be used in nearly all conveyor applications and pulley positions, and may be preferred when weight is a premium or when the pulley is relatively wide. Welded in stub shaft pulleys may be preferred when shaft removal is not necessary. Bolted connection stub shaft pulleys may be preferred when simplified shaft removal is desired and as a tool to minimize spares inventory.

Design of stub shaft pulleys can vary significantly with the methods detailed in CEMA B105.1 and 501.1. Some design concepts in these specifications do not apply to stub shafts. Other concepts need to design stub shafts are not addressed. A partial list of important concepts specific to stub shaft design would include: shaft deflection concept does not directly translate, welded shaft fatigue properties are not published, and bolted connection fatigue properties are not published. Consultation with your CEMA pulley manufacturer for proper stub shaft pulley design is recommended.

www.CEMANET.ORG has licensed this document to Patterapon Sukkool, Suanlum, , 2017

Introduction Pg 352
Vertical Curves Pg 352
- Concave Vertical Curves
- Design of Concave Vertical Curves
  - Calculation of T_c Tension
  - Precautions for the Design of Concave Curves
- Convex Vertical Curves
  - Design of Convex Vertical Curves
  - Use of Bend Pulleys for Convex Curves

Horizontal Curves Pg 361
- Definition of a Horizontal Curve
- Benefits of Horizontally Curved Belt Conveyors
- Typical Applications
- Disadvantages of Horizontally Curved Belt Conveyors
- Design of Horizontal Curved Belt Conveyors
  - Horizontal Motivating Force
  - Distribution of Idler Forces
  - Stabilizing Forces

Application Considerations Pg 368

WWW.CEMANET.ORG has issued this document (4650) on Apr 24 2017 to Pasakorn Sirakaew, Chonburi, , , Thailand

INTRODUCTION

With the development of horizontal curves, belt conveyors may apply even more applications. It is now common practice to combine incline and decline flights with horizontal and vertical curves to create a single conveyor that follows the process equipment layout or overland terrain. The purpose of this chapter is to outline design methodology for the design of horizontal and vertical curves. The design, installation and start up of conveyors with curves requires a combination of experience and advanced engineering capabilities. It is recommended that a CEMA member company be consulted for the actual design and commissioning of conveyors containing curves. For simplification, the text and diagrams in this chapter are principally concerned with curves on the carrying run of the belt conveyor. Curves occur on both the carrying and the return runs of the belt and in a variety of tension conditions. The tension calculation methodology in Chapter 6 is applicable to the analysis of curves.

VERTICAL CURVES

Vertical curves in belt conveyors are used to connect two tangent portions which are on different slopes. They are of two basically different types: concave vertical curves, where the belt is not restrained from lifting off the idlers; and convex vertical curves, where the belt is restrained by the idlers. Disregarding what may be the theoretically perfect shape for either curve, it is commercially satisfactory to consider them as arcs of a circle.

Concave Vertical Curves

A conveyor belt is said to pass through a concave vertical curve when the center of curvature lies above the belt. (See Figures 9.1 and 9.2) In such cases, the gravity forces of the belt and the load (if present) tend to hold the belt down on the idlers while the tension in the belt tends to lift it off the idlers. It is necessary to proportion the vertical curve so that the vector sum of these forces acts in a direction which allows the belt to stay down on the idlers and insures that the load will not be spilled. It is preferable that the belt does not lift off the idlers under any condition, including the starting of the empty belt.

If this is not practical, it is permissible to let the empty belt lift off the idlers if the following conditions are met:

Nothing above the belt will damage it (e.g., headroom of the structure, tunnel, skirtboards, guard rails, belt cover or machinery, etc.). Sometimes the empty belt can be protected from such sources of damage by locating flat idlers above the carrying strand.

Wind will not affect the proper training of the belt.

Lack of troughed support will not result in spillage as the loaded portion of the conveyor belt approaches the vertical concave curve.

WWW.CEMANET.ORG Licensed to document (#4010) on April 4, 2017 to Purchased from Shitalbon Solutions, Thailand



Figure 9.1
Concave vertical curves

Design Of Concave Vertical Curves

Because of the considerations mentioned above, it is good practice to design vertical concave curves with sufficient radius to allow the belt to assume a natural path on the troughing idlers under all conditions.

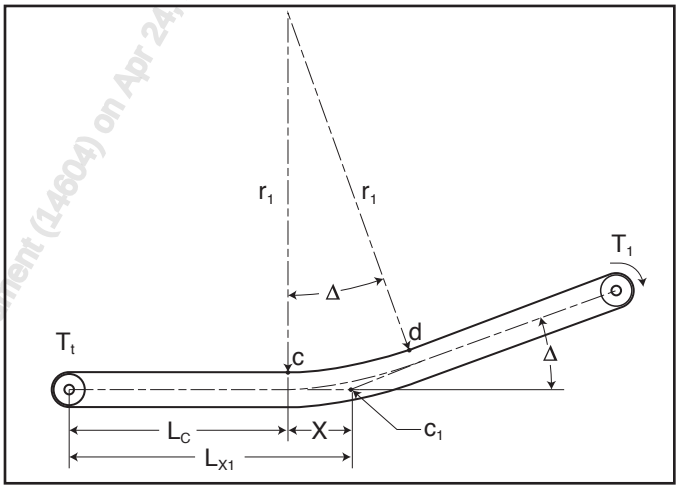

Figure 9.2
Profile of a conveyor with concave vertical curve

Where:

c = Point on carry side belt line where concave starts
c_1 = Intersection of the two straight conveyor paths
d = Point on carry side belt line where concave ends
Δ = Angle that defines the arc of the concave vertical curve
L_c = Distance from tail pulley to point c along conveyor path
L_{x1} = Distance from tail pulley to point c_1 along conveyor path
r_1 = Minimum radius to prevent belt from lifting off the idlers
T_1 = Belt tension at belt approaching drive pulley
T_c = Belt tension at point c or c_1
T_t = Belt Tension at tail pulley
X = Distance between points c and c_1 along conveyor path, $X = r_1 \times \tan\left(\frac{\Delta}{2}\right)$

WWW.CEMANET.ORG has issued this document (14604) on Apr 24, 2014 to Gaiarapo

The illustration in Figure 9.2 makes it clear that the location of the beginning of the concave vertical curve, point c, tangent point of the curve, is indeterminate until the minimum radius is known. However, a close approximation can be made by assuming that the beginning of the concave vertical curve is at point c, in Figure 9.2. After determining the minimum radius from the following formulae, a second and exact calculation should be made. The following formulae all involve point c, the start of the concave curve. But, for the first approximation, point c_1 will be used.

To prevent the belt from lifting off the idlers based on starting acceleration, the formula is:

$$r_1 = \frac{C_{25} \times T_c}{W_b}$$

Equation 9.3
r_1, Minimum radius for concave vertical curve

Where:

r_1 = Minimum radius to prevent belt from lifting off idlers in concave vertical curve
Note: Radii of less than 150 ft (45.8 m) are not generally used in practice
T_c = Minimum tension at point c or c_1 [lbf (kgf)]
W_b = Weight per unit length of the belt [lbf/ft (kgf/m)]
C_{25} = 1.11, Constant based on maximum incline of 25 degrees to the horizontal (dimensionless)

However, two hazards may exist. These require checking. The first involves the tendency of the belt edges to buckle when the tension in the belt is too low. The second is the possibility that the tension in the center of the belt may exceed the allowable tension in the belt.

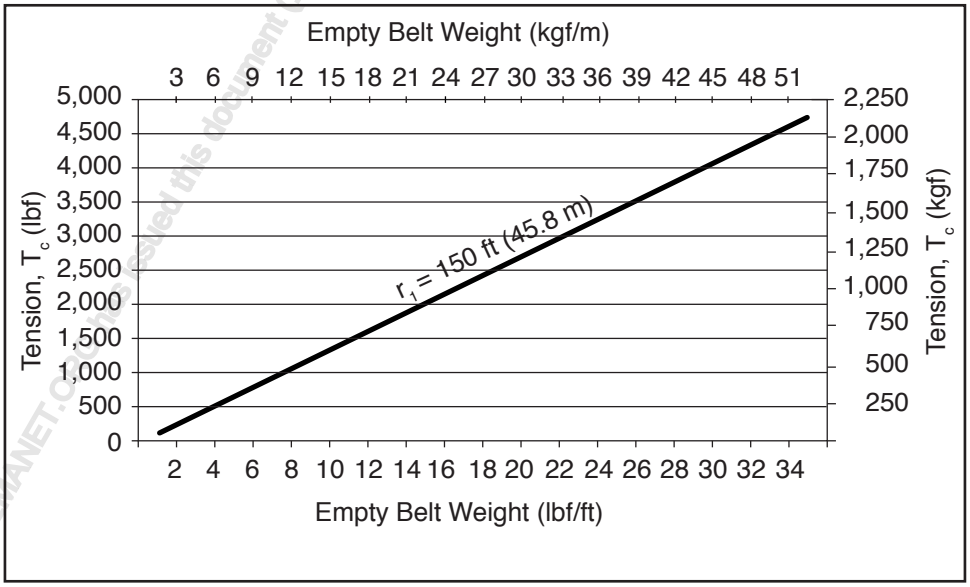

Figure 9.4
Tension vs. belt weight for minimum recommended radius of 150 ft (45.8 m)

To insure that the belt tension is sufficiently high to avoid zero tension in the belt edges at a concave curve, a check of the curve radius should be made by the use of the following formula for fabric constructions:

WWW.CEMANET.COM This document (1404) is issued to Patpong Kom Sirakool, Suanueng, , Thailand on Apr 25 2017

$$r_1 = \frac{B_m \times BW^2 \times p}{T_c - \sigma_a \times BW} \times \frac{\sin(\theta)}{48} \times \left[1 - \left(\frac{l_c}{BW}\right)^2\right]$$

Equation 9.5
r_1, Minimum concave vertical radius based on fabric belt edge stress

For steel-cable belts, however, this radius can be reduced to permit a controlled buckling which experience has shown neither harms this type of belt or its splices nor causes excessive spillage.
To prevent stressing the center of the belt beyond the rated tension of the belt, check the radius of the concave curve by using the following formula for both fabric and steel-cable construction:

$$r_{1c} = \frac{B_m \times BW^2 \times p}{T_r - T_c} \times \frac{\sin(\theta)}{48} \times \left(1 - \frac{l_c}{BW}\right)^2$$

Equation 9.6
r_{1c}, Minimum radius to prevent buckling of concave vertical curve based on stress in center of belt.

Where:

Assuming three equal length roller idler sets:

B_m = Modulus of elasticity of the conveyor belt per ply [lbf/in (N/mm)]

BW = Belt width [in (mm)]

$l_c = \frac{BW}{3}$ [in (mm)]

p = Number of plies in belt (assume steel cable belt p =1)

r_1 = Curve radius fabric belts [in (mm)]

r_{ic} = Curve radius steel cable belts [in (mm)]

T_r = Rated belt tension [lbf (N)]

θ = Trough angle of wing rollers

$\sigma_{a-\text{fabric belt}}$ = 30 lbf/in (5.3 N/mm), stress reduction at fabric belt edge

$\sigma_{a-\text{steel cable belt}}$ = 75 lbf/in - 1.5 $\times \frac{T_c}{BW}$ or 13.1 N/mm - 1.5 $\times \frac{T_c}{BW}$ stress reduction at steel cable belt edge

Belt moduli vary widely among belt manufacturers. The modulus values calculated from the table below may vary considerably from specific values given by manufacturers but, in most cases, they will be conservatively high and can be used for preliminary or estimating work.

Longitudinal or Warp Reinforcement	Approximation of Belt Modulus, B_m
Cotton	50 times rated tension*
Nylon	70 times rated tension*
Polyester	100 times rated tension*
Rayon	100 times rated tension*
Steel Cable	400 times rated tension
* Rated tension is lbf/in/ply (N/mm/ply) For steel cable belts assume 1 ply	

Table 9.7
Approximate belt modulus values

WWW.CEMANET.ORG e-issued this Document (4480) on Apr 24, 2017 to Pattarapom Sirakol, Rayong, Thailand

Formula 9.5 is used for avoiding zero tension in the belt edges, and should be applied to the operating empty belt. Formula 9.6 is used to prevent stressing the center of the belt beyond its rated tension. It should be applied to the condition where the belt is loaded from the tail pulley to the start of the curve and power is employed to start the belt from rest. Under starting conditions the allowable rated tension of the belt may be increased. See "Starting and Stopping Maximum Tensions" in Chapter 6. Use the largest of the three radii calculated in formulas 9.3, 9.5 or 9.6 above. If formula 9.3 or 9.5 governs, investigate the possibility of increasing T_c by providing additional takeup weight.

Calculation Of T_c Tension

The T_c belt tension can be determined by analyzing the curve as an individual flight as outlined in Chapter 6. The decision to work forward from T_t, tension at the tail pulley, or to work backward from T_1, depends upon the complexity of the path of the conveyor belt from these points to point c (c_1 for the first approximation).

The condition where the belt is most likely to lift while running is when the belt is loaded from the tail pulley to point c and is empty forward of point c (i.e., there is no load forward of point c to hold the belt down on the troughing idlers). When vertical distance, ft, if any, from the tail pulley to the point c (or c_1) is negative, the belt could lift when the belt is running empty.

The effect of acceleration of the belt conveyor when starting from rest must be considered, as the tension in the belt at point c will be increased over the running tension T_c. To prevent the belt from lifting from the idlers during acceleration at the start-up, it is necessary to calculate the acceleration forces and determine the total belt tension at the beginning of the curve. Refer to Chapter 6 for the effect of acceleration.

Where motors with higher than required horsepower are used, care should be taken in the calculation of acceleration forces to prevent underestimating the tension force in the belt at point c. If this is not done, the conveyor belt may lift off the idlers.

$$T_{ac} = T_c + T_a$$

Equation 9.8

T_{ac}, Acceleration tension in concave vertical curve

Where:

T_{ac} = Total tension at point c during acceleration

T_c = Tension at point c during normal running

T_a = Tension induced in the belt by accelerating forces at any given point (in this instance, at point c)

The accelerating force at any point on the conveyor is in direct proportion to the mass being accelerated. Since the mass is the weight divided by the gravity acceleration, the accelerating force is also in direct proportion to the weights accelerated. Therefore,

$$T_a = F_a \times \frac{W_c}{W_t}$$

Equation 9.9

T_a, Accelerating force at any point on the conveyor

www.CEMAT.ORG has issued this document (4/2017) on 4-2-2017 to Jiangsu Sinopol Suanluan... subject to

Where:

F_a = Total accelerating force for concave vertical curve calculations, conveyor loaded from tail to point c only
W_c = Total weight to be accelerated by the belt at point c
W_t = Total equivalent weight of all moving conveyor parts, excluding drive and drive pulley, plus loaded portion from tail to point c

Like the formula for T_c the above formulas apply to that condition where the belt is loaded from the tail pulley to point c, and where there is no load from point c to the terminal pulley. When the takeup is not near the discharge, the effect of the length of return run belt and the effect of the number of return run idlers should be reduced accordingly.

When the minimum radius has been calculated, based upon point c (or c_1) for the first approximation), the location of point c can be determined from equation 9.10. (Reference figure 9.2)

$$X = r_1 \times \tan\left(\frac{\Delta}{2}\right)$$

Equation 9.10
X, Distance for calculating location of point c

Precautions For The Design Of Vertical Concave Curves

With the trend toward stronger fabrics and new types of belt construction, the belt conveyor designer should consider the possibility of a lighter weight belt being used as a replacement at some future date. Because such a lighter belt would require a larger minimum radius, it is wise to design for the largest radius possible, considering economics and physical space requirements. In general, the minimum radius of the vertical concave belt conveyor curve should not be less than 150 feet.

Convex Vertical Curves

A conveyor belt is said to pass through a convex vertical curve when the center of curvature lies below the belt (See Figure 9.12). In such cases, the gravity forces of belt and of load (if present), and the belt tension itself, press the belt onto the idlers. When a troughed conveyor belt passes around the convex curve, the tension stress present is distributed across the belt so that the belt edges, being on a larger radius, are more highly stressed than is the belt center, where the radius of curvature is less. Similarly, the troughing idlers on a convex curve are more heavily loaded by radial pressures from the belt than those idlers not on the curve. A curve of sufficiently large radius holds these extreme stresses and loads within acceptable limits.

WWW.CEMANET.ORG licensed to ... (Document 1468) on Apr 24, 2017 to Pattarapon Sritrakool (Siamtung), , Thailand



Figure 9.11
Convex vertical curves

If a convex vertical curve is located where the belt tension is low, the distribution of stress across the belt may result in less than zero tensile stress at the center of the belt. This can produce buckling in the belt and possible spillage of the load.

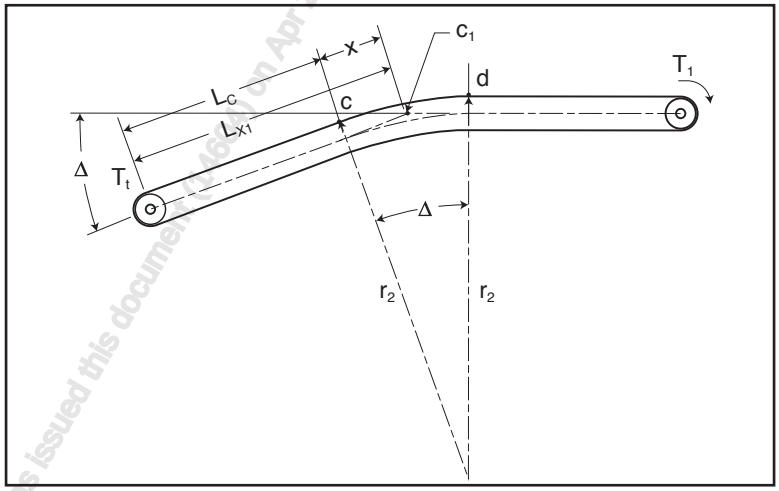

Figure 9.12
Profile of a conveyor with convex vertical curve

www.CEMA-ET.ORG has issued this document (4464) on Apr 24, 2013 to Patti

Design Of Convex Vertical Curves

The following equations are used to determine the minimum radius to use to prevent undesirable conditions such as belt buckling, load spillage and over stressing the edges.

$$r_2 = \frac{B_m \times BW^2 \times p}{T_r - T_c} \times \frac{\sin(\theta)}{48} \times \left[1 - \left(\frac{l_c}{BW}\right)^2\right]$$

Equation 9.13
r_2, Convex vertical curve minimum radius to prevent edge over-stress in fabric and steel cord belts

$$r_{2c} = \frac{B_m \times BW^2 \times p}{T_c - \sigma_a \times BW} \times \frac{\sin(\theta)}{48} \times \left[1 - \left(\frac{l_c}{BW}\right)\right]^2$$

Equation 9.14
r_{2c}, Convex vertical curve minimum radius to prevent buckling in center of belt-

Where:

B_m = Modulus of elasticity of the belt (Ref. Table 9.7)
BW = Belt width
$l_c = \frac{BW}{3}$
p = Number of plies in the belt p = 1 for steel cord belts
r_2 = Minimum radius of convex curve based on belt edge stress
r_{2c} = Minimum radius of convex curve based on belt center stress
T_c = Tension in the belt at point c (or c_1)
T_r = Rated belt tension

Equation 9.14 should be applied to the condition where the belt is being started from rest, with the belt loaded from the tail pulley to the convex curve. Under starting conditions, the allowable rated tension of the belt may be increased. See Chapter 6, "Starting and Stopping Maximum Tension".

Equation 9.13 should be applied to the condition where the belt is operating empty. Always use the largest of the values of the minimum convex curve radii determined by formulae. If formula 9.15 governs, investigate the possibility of increasing T_c by providing additional takeup weight.

Both the carrying and return idlers should be spaced so that the sum of the belt load, plus the material load, plus the radial resultant of the belt tension does not exceed the load capacity of the idlers. The radial resultant of the belt tension can be calculated approximately as follows:

$$F_r = 2 \times T_c \times \sin\left(\frac{\Delta}{2n}\right)$$

Equation 9.15
F_r, Load on idlers in convex vertical curve

The troughing idler spacing on a convex curve can be determined in the following manner:

$$Arc = 2 \times \pi \times r_2 \times \left(\frac{\Delta}{360}\right)$$

Equation 9.16
Arc, Arc length of convex vertical curve

$$S_{ic} = \frac{I_{lr} - F_r}{W_b + W_m}$$

Equation 9.17
S_{ic}, Maximum troughing idler spacing in a convex vertical curve

WWW.CEMANET.ORG has issued this document (1465) on Apr 14 2017 to Satrapon Siyakool, Suddhengh, Thailand

Where:

Δ	= Change in the angle of the belt entering and leaving the curve
T_c	= Tension in the belt at point c (or c_1)
F_r	= Resultant force on idlers at convex vertical curve, produced by belt tension at curve
I_{lr}	= Allowable load per troughing idler (troughing idler load rating) See Chapter 5
n	= Number of spaces between idlers (must be a whole number)
S_{ic}	= Maximum troughing idler spacing on the curve
W_b	= Weight of belt per unit length
W_m	= Weight of material per unit length

The above formula for maximum troughing idler spacing on the curve is subject to the following three conditions:

If the formula results in a troughing idler spacing on the curve greater than the normal idler spacing adjacent to the curve, S_{ic} is limited to values no greater than the normal troughing idler spacing. (For normal idler spacing, see Chapter 5, "Idler spacing".

If the formula results in a troughing idler spacing greater than one-half of the normal idler spacing adjacent to the curve, but less than such normal idler spacing, S_{ic} is limited to values no greater than the value given by the formula.

If the formula results in a troughing idler spacing less than one-half of the normal idler spacing adjacent to the curve, S_{ic} is limited to no less than one-half normal idler spacing adjacent to the curve. Solve for a new F_r. If possible, increase the radius of the curve to that based on this new F_r value.

There is also a practical limitation in determining the S_{ic} value. The idler spacing on the curve should be in integral and equal increments to simplify structural frame details. This further limits the actual value of S_{ic}.

$$n = \frac{Arc}{S_{ic}}$$

Equation 9.18

N, Number of equal idler spacings in convex curve

The spacing of return idlers can be determined similarly to the method used for troughing idlers. Use the resultant return idler load plus belt weight and then compare this value with the allowable load rating table in Chapter 5.

Use Of Bend Pulleys For Convex Curves

A convex curve employing troughing idlers is recommended for all installations where space will permit for two reasons. First, the belt edge stress in a troughed belt is reduced by a properly designed convex curve. Second, there is less disturbance of the material on the belt as it passes through the change in belt profile, thereby reducing wear on the belt and idlers and preventing spillage over the edges of the troughed belt.

Bend pulleys on the carrying runs of troughed belts, in place of convex curves, are not generally recommended. A bend pulley should be used only in special cases, when space will not permit a properly designed convex curve and the belt conveyor is not sufficiently loaded to cause spillage of material over the edges of the flattened belt as it passes over the bend pulley.
Under these conditions, the diameter of the bend pulley should be large enough to insure retention of

www.CEMAnet.org has issued this document (1404) on Apr 14 2017 to Satyam Sirikool, Suanlang, Thailand

the material on the belt as the belt changes direction. The diameter required varies with the cosine Δ (angle of change in direction) and V^2 (square of the belt speed). This becomes quite large for belt speeds greater than 500 fpm (2.5 m/s). Naturally, this is another reason why troughing idlers are preferable. The minimum diameter of the bend pulley, for a given belt velocity or speed, should be as listed in Table 9.19.

Minimum diameter of bend pulley in (mm)	Belt speed fpm (m/s)
16 (400)	200 (1.0)
20 (500)	300 (1.5)
36 (900)	400 (2.0)
54 (1400)	500 (2.5)

Table 9.19
Minimum bend pulley diameter for forming convex vertical curves vs. belt speed

In no case should the diameter be less than the minimum value shown in the minimum pulley diameter tables in Chapter 7.

HORIZONTAL CURVES

Definition Of A Horizontal Curve

Horizontal curves in belt conveyors can be defined as connecting two tangent portions of a given conveyor which are on different headings. More directly, a conveyor which includes an arc connecting any two segments of the belt conveyor which are not co-linear or which intersect at any given deflection angle other than zero. As a rule it is typically satisfactory to use circular arcs to define the curve.



Figure 9.20
Horizontal curves following access road

WWW.CEMANET.ORG has issued this ... 1400 ... Apr 1, 2017 to Patrapon Sritrakool, Suankularb, Thailand

Benefits Of Horizontally Curved Belt Conveyors

Advantages of using horizontal curves in belt conveyors include reduced capital and operating costs due to elimination of transfer stations and a potential decrease in environmental impact and energy consumption from this reduction in transfers and drive terminals. Incorporation of Tripper Booster style intermediate drives using closed-loop logic control for power application and tension management, in conjunction with vertical and horizontal curves makes possible, in theory, virtually unlimited length for continuous, single flight belt conveyors. In some cases the specific combination of multiple flights and the associated elimination of transfer points is the specific motivation for incorporating horizontal curves.



Figure 9.21
Horizontal curve in a tunnel

Typical Applications

Horizontal curves in belt conveyors are routinely used to avoid obstructions occurring on the straight-line path of the conveyor, to take advantage of desirable or avoid undesirable terrain or topography, or to follow a specified track dictated by other constraints, i.e. tunnel boring machine or existing right-of-ways. In general, long overland conveyors, conveyors specifically located by terrain, obstruction or prior facility, and conveyors traversing populated or environmentally sensitive areas are prime candidates for horizontal curves.

Disadvantages Of Horizontally Curved Belt Conveyors

Horizontally curved belt conveyors exhibit characteristics not typically found in properly installed, aligned, and maintained, straight-line conveyor systems. Primarily, these are a result of tensile forces that include components perpendicular to normal belt travel, a radial force, which create a destabilizing force, customarily referred to as “de-training force” or “motivating force”. Contrary to free bodies in motion along an arc, the destabilizing forces in a belt conveyor act toward the inside, or center-of-curvature side of the curve. Resulting problems and issues include belt misalignment, belt cover wear, belt edge deterioration and delamination of plies under certain design methods, accelerated idler roll wear, material shifting and even material spillage. Future system modifications and upgrades, power, speed or tonnage changes require significant investigation, and options may be greatly limited. However, properly applied, analyzed and designed belt conveyors incorporating horizontal curves can be highly functional and efficient.

Design Of Horizontal Curved Belt Conveyors

In its basic simplified form, horizontal curve design for a belt conveyor is the quantification of the motivating forces and establishment of the magnitude and means of providing the analogous counteracting or restoring forces for the system. If only the traditional means of stationary or static models and analyses for belt conveyors is considered, this would appear to be a fairly straightforward task. Belt tension, gravity, and frictional reactions between the belting and idlers rolls appear to be the only forces involved. However, considering the typical complexity of a belt conveyor requiring a horizontal curve and the speed and tonnage capacity of most modern conveyors, every aspect of the operating conditions must be evaluated. Additional means of analysis and design, including dynamic models, should be employed. Transient tensions due to acceleration and deceleration, varied or cyclical loading conditions, as well as detailed material characteristics and belt properties must be evaluated in every aspect. Additionally, unequal tension distribution across the width of the belt can cause an array of problems.

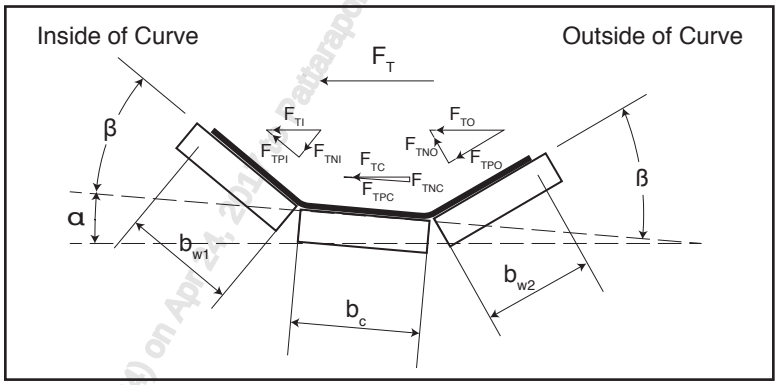

Figure 9.22
F_T, Horizontal motivating force

Horizontal Motivating Force

Figure 9.22 shows the basic model for analysis of the motivating force F_T as a function of the corresponding belt tension, T_n, at the relevant section of belt. The relationship between the components can be expressed by Equation 9.23.

$$F_T = \frac{T_n \times S_i}{r_3}$$

Equation 9.23
F_T, Horizontal curve motivating force

Where:

r_3 = Radius of horizontal curve at center of belt
T_n = Belt tension in the curve, n
S_i = Idler spacing

Early simplified evaluations considered the belt tension to be uniformly distributed across the entire belt cross-section and corresponding rolls of the idler. The resulting unit radial force was therefore in proportion to the width of the belt section in contact with the troughing idler. Later analysis has resolved the motivating force F_T into normal and perpendicular components acting on the three individual rolls of the troughing idler to more accurately define the effect (Figure 9.22).

WWW.CEMANET.ORG has issued this document (6504) on Apr 24, 2014 - Pattarapom Smaeng - Student Member



Figure 9.24
Horizontal curve under construction

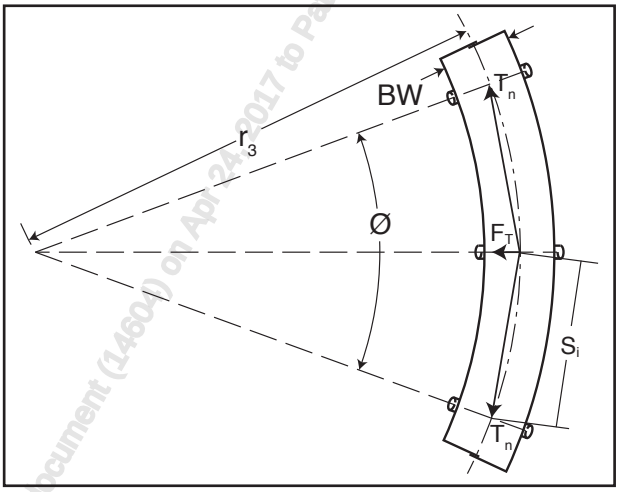

Figure 9.25
F_T, Motivating force diagram

Distribution of Idler Forces

The distribution of forces between each of the three individual rolls can be proportioned and defined by the following equations and Figure 9.37.

$$F_{TI} = \frac{b_{w1}}{BW} \times F_T$$

Equation 9.26
F_{TI}, Force on inside wing roller "1"of horizontal curve three equal roll troughing idler

$$F_{TC} = \frac{b_c}{BW} \times F_T$$

Equation 9.27
F_{TC}, Force on center roller of horizontal curve 3 equal roll troughing idler

WWW.CEMANET.ORG Licensed to document (146000) on Apr 24, 2017 to Padcarapon , Thailand

$$F_{TO} = \frac{b_{w2}}{BW} \times F_T$$

Equation 9.28
F_{TO}, force on outside wing roller "2" of horizontal curve
3 equal roll troughing idler

Where b_{w1} is the length of belt in contact with the inside idler wing roll and b_{w2} the length of belt in contact with the outside idler wing roll. b_c is the length of the idler center roll. These individual roll applied forces can be resolved into their normal and parallel components as well.

Normal Forces

$$F_{TNI} = F_{TI} \times \sin(\beta + \alpha)$$

Equation 9.29
F_{TNI}, Normal force on inside wing roller "1" of horizontal curve
three equal roll troughing idler

$$F_{TNC} = F_{TC} \times \sin(\alpha)$$

Equation 9.30
F_{TNC}, Normal force on center roller of horizontal curve
three equal roll troughing idler

$$F_{TNO} = F_{TO} \times \sin(\beta - \alpha)$$

Equation 9.31
F_{TNO}, Normal force on outside wing roller "2" of horizontal curve
three equal roll troughing idler

Parallel Forces

$$F_{TPI} = F_{TI} \times \cos(\beta + \alpha)$$

Equation 9.32
F_{TPI}, Parallel force on inside wing roller "1" of horizontal curve
three equal roll troughing idler

$$F_{TPC} = F_{TC} \times \cos(\alpha)$$

Equation 9.33
F_{TPC}, Parallel force on center roller of horizontal curve
three equal roll troughing idler

$$F_{TPO} = F_{TO} \times \cos(\beta - \alpha)$$

Equation 9.34
F_{TPO}, Parallel force on outside wing roller "2" of horizontal curve
three equal roll troughing idler

WWW.CEMANET.ORG has issued this document (14604) on Apr 24, 2017 ( ) Pasin Thongsilakool, Thailand

Tests and practical experience have shown that the total parallel force is an accurate quantification of the radial force due to tension at the section. The total destabilizing or motivating force therefore can be expressed by the following equation.

$$F_{TP} = F_{TPI} + F_{TPC} + F_{TPO}$$

Equation 9.35
F_{TP}, Total motivating force or total parallel radial force of horizontal curve three equal roll troughing idler

Stabilizing Forces

The counteracting or stabilizing force is generated by the weight of the belt and friction between the belt and idler rolls. The normal force generated by the weight of the belt (FWB) proportioned to each individual roll is straight-forward.

$$F_{WB} = \frac{W_b \times S_i}{BW} \times \left[\left(L_{BI} \times \sin(\beta+\alpha)\right) + \left(L_C \times \sin(\alpha)\right) - \left(L_{BO} \times \sin(\beta-\alpha)\right)\right]$$

Equation 9.36
F_{WB}, Normal force of belt on of horizontal curve three equal roll troughing idler

The force due to the weight of the material however, may not be as readily apparent. The first task is to quantify the individual segments of the material cross-section reacting on each individual roll of the carrying idler as shown in Figure 9.37.

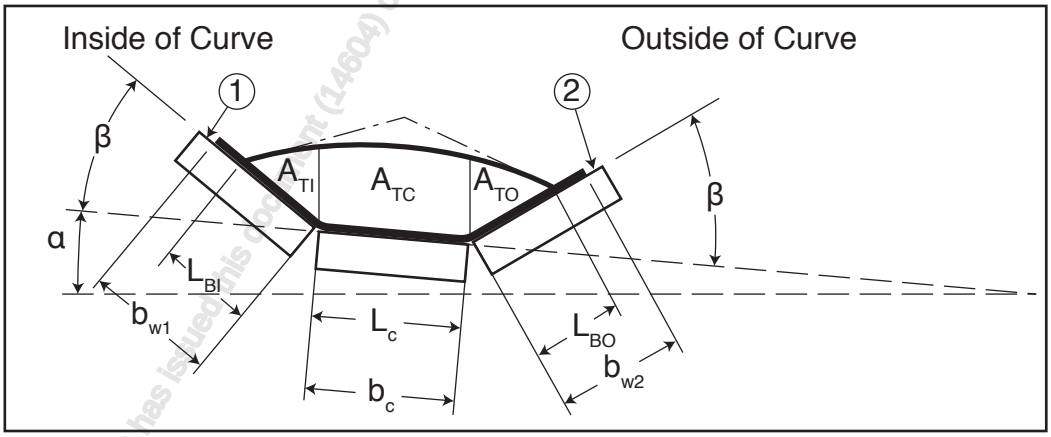

Equation 9.37
Horizontal curve nomenclature for 3 equal roll troughing idler

The force normal to the idler rolls from the weight of the material (F_{WM}) can then be expressed by this equation, where γ_m is the bulk density of the material.

$$F_{WM} = (S_i \times \gamma_m) \times \left[\left(A_{TI} \times \sin(\beta+\alpha)\right) + \left(A_{TC} \times \sin(\alpha)\right) - \left(A_{TO} \times \sin(\beta-\alpha)\right)\right]$$

Equation 9. 38
F_{WM}, Normal force from the weight of the bulk material for horizontal curve three equal roll troughing idler

WWW.CEMAT.ORG has issued this document (14604) on Apr 24, 2017 to Paratpom Sirikool, Suanlung, , , Thailand

These two (2) expressions, F_{WB} and F_{WM} are the total normal component of the restoring force. The restoring force from friction between the belt and the rolls of the idler is the parallel force and can be determined by this equation.

$$F_R = \mu_I \times \left[\left(\left(\frac{b_{W1}}{BW} \times W_b\right) + (A_{TI} \times S_i \times p)\right) \times \cos(\beta + \alpha) + F_{TNI}\right] +$$
$$\mu_C \times \left[\left(\left(\frac{b_c}{BW} \times W_b\right) + (A_{TC} \times S_i \times p)\right) \times \cos(\alpha) + F_{TNC}\right] -$$
$$\mu_O \times \left[\left(\left(\frac{b_{W2}}{BW} \times W_b\right) + (A_{TO} \times S_i \times p)\right) \times \cos(\beta - \alpha) - F_{TNO}\right]$$

Equation 9.39
F_R, total normal component of restoring force of horizontal curve three equal roll troughing idler

"μ" is the appropriate friction factor between the belt and the corresponding inside, center, or outside idler roll. Respective values for friction factor should consider belt surface conditions, i.e. temperature, moisture, wear, etc. Proper system alignment, installation tolerances and maintenance practices are also critical for successful operation of the curved conveyor. Significant additional forces can be placed on idler rollers and bearings if the idlers are not carefully aligned on convex and horizontal curves.



Figure 9.40
Straight conveyor to horizontal curve transfer

WWW.CEMANET.ORG has issued this document (1 ... or 2... 2017 (... Pattarapon Sittarkol, Siam Lyang ... , Thailand

APPLICATION CONSIDERATIONS

It is apparent that for proper horizontal curve design in belt conveyors the only true variables are the tension in the belt at the curved section, gravity action on the belt and material, and the interaction of friction as related to the contact of the belt with the idler rolls. Evaluation of the full range of tensions and loading conditions can become time consuming and tedious. Considerable time and effort should be devoted to detailed analysis for proper determination of the complete range of belt tensions expected. It is sometimes beneficial to carefully locate and size tripper boosters for tension stabilization for curve design. Placing a booster just upstream of a desired curve location can significantly lower the tension in the curve zone as well as greatly reduce the differential between maximum and minimum tension. For applications such as tunneling, where very close adherence to profile and route are often combined with specific radii requirements the only possible means of meeting requirements may be specifically locating a booster in conjunction with the curve. Also, friction factors should be adjusted as necessary to account for all anticipated operating conditions on the belt. Instances where very low coefficients of friction are anticipated may support using effective "zero" factors. Modern automated analysis methods make quick evaluation of multiple conditions practical and advisable.

Not to be neglected or minimized is the return side of the belt. Here, tensions are often generally stable except for acceleration/deceleration, and stabilization forces are based solely on the weight of the belt and friction. Belt training often mandates vee-return idlers and/or guide rolls, with some instances even necessitating three-roll troughing idlers on the return run. Again, detailed analysis and consideration of the full-range of operating conditions are a must.

Several additional means of belt restraint and stabilization are often used in place of, or in addition to, super elevation of the idlers. One of the most common is to add a restraining or guide roll to the idler frame mounted perpendicular to the inside wing roll. In the absence of adequate stabilizing force the belt will merely contact the guide roll and be prevented from further movement to the inside of the curve. The magnitude of the force exerted on this roll by the belt should be just as carefully calculated and kept at a level so as not to cause excessive loading, or especially damage, to the roll, nor belt edge wear or damage.

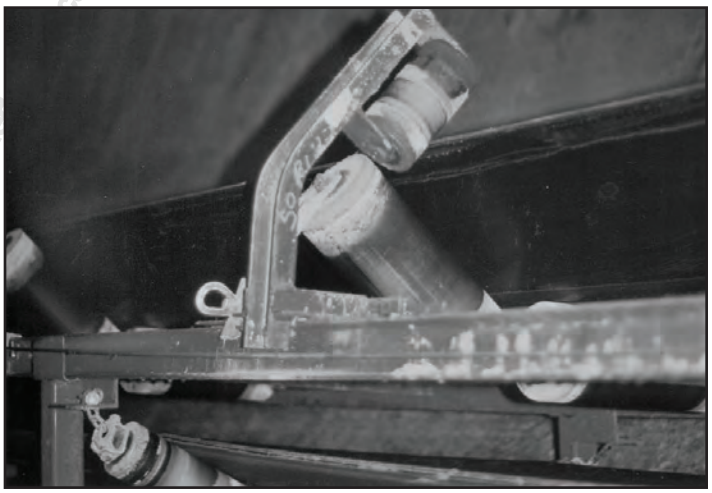

Figure 9.41
Restraining guide roller

WWW.CEMANET.ORG has issued document (#1000) on Apr 2, 2017 to transportation group guidelines, all rights reserved

Another system employed uses a pendulum-type mount for the idler support which allows the entire idler and support to swing or rotate transversely in response to the destabilizing force. Careful attention to alignment, belt loading and belt training should be employed with this type of system due to the center-of-gravity shifts causing undesirable action of the supporting system which can result in exaggerated misalignment.



Figure 9.42
Declined horizontal curve

WWW.CEMANET.ORG has issued this document (14604) on Apr 2[illegible] 201[illegible], Thank[illegible]

WWW.CEMANET.ORG has issued this document (14604) on Apr 24, 2017 to Pattarapom Sritrakool, Suanluang, , , Thailand

This Page Left Intentionally Blank

Introduction Pg 373
Incline Limitations with Conventional Conveyors Pg 373
Molded Cleat Belts Pg 374
- Cleat Designs
- Capacities
- Advantages of Molded Cleat Belts
- Disadvantages of Molded Cleat Belts

Pocket Belt Conveyors Pg 381
- Types of Pocket Belt Conveyors
- Cleat Design
- Inner Pocket Belt Conveyors
- Flexible Cleat Pocket Belt Conveyors
- Advantages of Pocket Belt Conveyors
- Disadvantages of Pocket Belt Conveyors

Totally Enclosed Belt Conveyors Pg 390
- Pipe/Tube Belt Conveyors Pg 391
  - Basic Components of Pipe/Tube Conveyors
  - Belt Construction for Pipe/Tube Conveyors
  - Capacities of Pipe/Tube Conveyors
  - Applications for Pipe/Tube Conveyors
  - Belt Alignment in Pipe/Tube Conveyors
  - Power Requirements of Pipe/Tube Conveyors
  - Advantages of Pipe/Tube Conveyors
  - Disadvantages of Pipe/Tube Conveyors
- Fold Belts Pg 404
  - Basic Construction of Fold Belt Conveyors
  - Capacities of Fold Belt Conveyors
  - Transitions With Fold Belt Conveyors
  - Advantages of Fold Belt Conveyors
  - Disadvantages of Fold Belt Conveyors
- Suspended Belt Conveyors Pg 410
  - Basic Construction of Suspended Belt Conveyors
  - Capacities of Suspended Belt Conveyors
  - Advantages of Suspended Belt Conveyors
  - Disadvantages of Suspended Belt Conveyors

WWW.CEMANET.ORG has issued this document to Ap 2 2170 from Sitakoon Siriluang, , Thailand

Sandwich Belt Conveyors **Pg 415**
- Mechanics of Sandwich Belt Conveyors
- Design of Sandwich Belt Conveyors
- Capacities of Sandwich Belt Conveyors
- Configurations of Sandwich Belt Conveyors
- Applications for Sandwich Belt Conveyors
- Advantages of Sandwich Belt Conveyors
- Disadvantages of Sandwich Belt Conveyors

WWW.CEMANET.ORG has issued this document (14604) on Apr 24, 2017 to Pattarapom Chaiyaphum (Pattarapom Chaiyaphum) , Thailand

INTRODUCTION

Over the years a wide range of approaches to enhance the ability of belt conveyors to convey bulk material up steep inclines have evolved. Concerns about material degradation and conformity to terrain have also opened up a market for belt conveyors that can lower material down steep declines as well. This increased ability, along with the already very adaptable path that they can negotiate, (horizontal, vertical and compound curves), makes belt conveyors the most versatile method of moving bulk material between the required loading and unloading points.

For the approaches discussed in this chapter, nearly all of the material in this book is relevant. However, allowable material cross-sections, belt speeds and lump size restrictions differ from standard belt conveyor practice for all these approaches. For some of them, the methods of tension and power calculation must also be suitably modified.

INCLINE LIMITATIONS WITH CONVENTIONAL CONVEYORS

In Chapter 3, Table 3.5 lists recommended maximum inclination angle limits that conventional troughed conveyors with smooth top cover belts can safely convey various bulk materials. These maximum inclination angles generally range from 10° to 20° depending on the bulk material. Beyond these recommended maximum angles of incline, the material will want to:

- Slide down the belt en masse
- Slide internally on top of itself
- Lumps will roll down the belt
- Lumps will roll down over top of the fines

Characteristics of bulk materials such as bulk density, lump size, lump shape, moisture content, internal angle of friction (angle of repose) and coefficient of friction between the material and the belt's top cover, are all factors that contribute to the maximum incline angle up which material can be conveyed up by a belt with a smooth top cover. Of all these, it is the value of the material's angle of repose that is most indicative of its ability to be conveyed up an incline.

Light, fine, dry materials, such as sand or grain, can slide easily on a smooth top cover belt, as the individual particles are very small and do not indent into the rubber cover. Only the coefficient of friction between the belt and the material limits the incline in this case. Material that is heavy and consists of large irregular lumps allows increased angles of inclination. The edges of the lumps tend to indent into the belt cover and a mechanical holding action takes place. This is the reason rubber covers generally allow a greater angle of inclination than PVC covers. Rubber covers usually are softer and exhibit a higher coefficient of friction than PVC.

Mechanical interlocking of adjacent lumps also assists in increasing the allowable angle of inclination. Most conveyors, however, handle material that is a combination of lumps and fines. The fines migrate to the belt surface as the belt runs, sometimes lowering the allowable angle of incline. At other times, the fines will fill the voids between regular sized lumps, reducing their tendency to roll back down the belt thus increasing the maximum allowable inclination. Small, uniform, spherical material, such as iron ore pellets, present a problem in that they can negotiate a given angle of incline when continuously fed, but the trailing end of a load will not negotiate the same incline, presenting severe rollback problems.

www.BeltConveyorBook.com (Special thisdomain 14600) Oct 24 2017 (Pattaradom Sritrakool, Sianluang Thailand)

A belt that is wet before the material is loaded, a common occurrence, causes the attainable angle of inclination to be lowered. The moisture reduces the coefficient of friction between the top cover of the belt and the material, thus the noticeable reduction. The agitation that the bulk material experiences as it travels over each idler greatly influences the angle of inclination at which the material can be successfully conveyed. Therefore belt speed and belt sag are the two parameters of the conveyor design that most influence the permissible angle of inclination. Loading at a low angle will maximize the angle of inclination that can be obtained. Having the material settled down completely at a lower angle of inclination, before trying to maximize the angle at which it is conveyed, is highly recommended. Time is also a parameter that can influence the maximum attainable angle of inclination. The longer and harder a bulk material is agitated, the lower the angle of surcharge. Therefore, short conveyors can convey at higher angles of inclination than long. High acceleration forces on start-up and/or deceleration forces on braking can induce material 'slip-back' on an incline/decline, when under normal running conditions, the material handles the incline quite well. These parameters must be watched with care during the design phase of the conveyor if the angle of inclination is near the limit for the material being handled.

MOLDED CLEAT BELTS

Cleat Designs

Simply making the belt's top cover irregular will increase its ability to carry materials up slightly greater inclines than conventional conveyors with smooth top covers. Most belt manufacturers are capable of molding patterns into the top cover of the belt. Molded cleats come in a large variety of patterns. Patterns are available from shallow chevrons approximately 1/4 inch (6 mm) high to aggressive deep 'U' shaped cleats 1-3/8 inch (35 mm) high. Figures 10.3 and 10.4 show the two extremes. The patterns can either span the full width of the belt, or consist of 6 inch wide shapes, 8 to 10 inches (200 to 250 mm) apart and staggered across the belt width. Cleat arrangements are usually designed to allow the efficient draining of wet materials, to allow troughing with standard idlers, and to minimize problems when they contact return idlers. These cleats have more effect on the tendency of the materials to slide on the belt's top cover than the problems of material rolling or sliding on top of itself.

For this approach, all the material presented in this book on conveying with conventional belt conveyors applies except the recommended angles of inclination in Table 3.5, the recommended belt speeds, and the capacities of Chapter 4. Belt manufacturers recommend for shallow cleats, a maximum 5° increase in the allowable angle of incline over those values provided in Table 3.5 for smooth top cover belts. Deep molded cleats can obviously provide even greater inclination angles than that. Table 10.5 provides a general guide to the angles of inclination belt manufactures advertise as attainable with their molded cleats, both deep and shallow. The allowable angle of inclination for a specific cleat pattern and height depends largely on the material characteristics especially the angle of repose. These handling characteristics can vary widely. Recommend the material be tested and, a consultant or conveyor manufacturer with the requisite expertise, or a belt manufacturer be consulted when determining the safe maximum allowable angle for a specific material.

Capacities

The capacities, provided in Chapter 4, must be modified for belt conveyors using molded cleat belts at steep angles. On conventional conveyors the material tends to conform to its surcharge angle as measured in a vertical plane. This decreases the actual surcharge area available on an inclined conveyor. At normal angles of inclination, the loss in capacity is minor and not usually taken into account. At steep angles, the cross-sectional area being handled must be reduced. The reduction can be significant and can't be attributed to the loss in surcharge cross-sectional area alone. Cross-sectional area reduction

www.CEMAConfer.org Document (1450) on Apr 25, 2017 to Patterapon Suksomjaroen, Thailand

factors are therefore usually applied to the total area available as if the conveyor was horizontal. Highly recommended the maximum allowable CEMA standard cross-sectional area (A_s), as calculated by the method in Chapter 4, be reduced by one of the two methods that follow.

The first method uses the angle of repose, the surcharge angle, and the inclination angle of the conveyor, to arrive at a reduction factor to apply to the total cross sectional area (A_s). The first reduction factor (k_1) is a function of the difference between the angle of repose and the surcharge angle. The larger the difference between these two values, the more susceptible the material is to the vibrations it will experience while being conveyed. The more susceptible the material is to these disturbances, the more the cross-sectional area has to be reduced to convey it successfully at a steep angle without serious slip-back. The second reduction factor (k_2) is a function of the conveyor inclination and the angle of repose. It is known that for a given material, the ability to convey it up an incline at near full cross-sectional area decreases, as the inclination angle of the conveyor increases and approaches its angle of repose. The second method simplifies the reduction factor calculation by providing a chart for them based on the material's approximate characteristics and the inclination angle of the conveyor.

$$A_{t-red} = k \times A_s$$

Equation 10.1
$A_{t\text{-}red}$, Molded cleat belt cross sectional area reduction method 1

Where:

A_s = CEMA standard cross sectional area from Chapter 4

$k = k_1 \times k_2$ Total cross sectional area reduction factor (dimensionless)

$k_1 = \cos^3(\phi_r - \phi_s)$ Reduction factor due to susceptibility to agitation (dimensionless)

$$k_2 = \sqrt{\frac{\cos^2(\delta) - \cos^2(\phi_r)}{1 - \cos^2(\phi_r)}}$$ Reduction factor due to conveyor incline (dimensionless)

ϕ_s = Surcharge angle, ϕ_r = Angle of repose, δ = Conveyor incline angle (all in degrees)

Alternately $A_{t\text{-}red}$ can be approximated by method 2 using k from Table 10.2 in Equation 10.1.

Cross Sectional Area Reduction Constant, k (dimensionless)							
Material Characteristic	Angle of Conveyor Inclination, δ (deg)						
	15°	20°	25°	30°	35°	45°	45°
Free Flowing	0.80	0.70	0.50	NA	NA	NA	NA
Slightly Rough & Coarse	0.90	0.80	0.70	0.55	0.40	NA	NA
Sticky	1.00	0.90	0.80	0.70	0.60	0.45	0.30

Table 10.2
k, Cross sectional area reduction constant for molded cleat belts

The angle of inclination can be maximized by minimizing any disturbing forces the material sees as it travels over the troughing idlers. Use slower belt speeds and less sag than recommended in Chapter 4 and 6. A maximum belt speed of 300 to 400 fpm (1.5 to 2.0 m/s), along with a maximum belt sag of 1 percent is generally recommended. Even slower belt speeds and less sag than these values will help to maximize the angle of inclination.

WWW.CEMANET.ORG has issued this document to [illegible] on Aug 24, 2017 to [illegible] (Stanley Consulting) [illegible]

To minimize the risk of vibrations, the distance between the return idlers should not be a multiple of the cleat spacing. Return snub or bend pulleys are not to be used under any circumstances with deep cleated belts. On shallow cleated belts they are usually not recommended. In these applications where they absolutely must be used, they are to be used only on the low tension side of the drive and must be of a very large diameter.

Advantages of Molded Cleat Belts

- Economical method of increasing the angle of incline
- No additional mechanical components over a standard belt conveyor

Disadvantages of Molded Cleat Belts

- The allowable angle of incline is limited.
- The cleats will wear more rapidly than a standard smooth top cover and the belt may lose its inclined conveying capabilities.
- At higher belt speeds, as the cleats pass over the return rollers, vibrations can occur that cause accelerated cleat wear and a reduction in return roll bearing life.
- The belt is more difficult to clean than standard belt conveyors. Belt brush, belt beater, air blast, water spray, or a wash box belt cleaner must be used.
- Molded cleat belts are usually restricted to short conveyors where few or no return idlers are needed and either the material does not stick to the surface or where the carry back is acceptable.



Figure 10.3
Example of molded shallow multi-chevron cleated belt



Figure 10.4
Example of molded cleat deep “U”-shaped cleated belt

WWW.CEMANET.ORG has issued this do

Material Description	Maximum Allowable Conveyor Incline (deg)	
	Deep Cleats	Shallow Cleats
Alum, fine	26-27	
Alum, lumpy	26-30	
Alumina	25	15-17
Alumina hydrate	27-30	25
Alumina sulphate	25	22
Ammonium chloride	22-25	
Ammonium nitrate	25-30	
Ammonium sulphate, granular	25-30	
Asbestos ore	25-30	
Asbestos, shredded	29-32	
Ashes, coal, dry 1/2 inch & under	28	25-30
Ashes, coal, dry 3 inch & under	28	
Ashes, coal, wet 1/2 inch & under		28-32
Ashes, fly	25-30	20-25
Asphalt, paving binder	28-30	
Bagasse	30	
Baking Powder	22-25	
Bark, wood, refuse	28-30	22
Barley	25-27	15-17
Barytes, powdered	25-27	
Bauxite, ground, dry	30	25
Bauxite, crushed 3 inch & under	30	22
Bauxite, mine run	30	25
Beans, castor, whole	25	
Beet pulp, dry	30	
Beet pulp, wet	30-32	
Beets, sugar, whole	23-27	15
Bentonite, crude	28-30	
Bone meal	28-30	
Borax, 3 to 6 inches	28-30	
Borax, fine, 1/8 inch & under	28	25-30
Brewers grain, spent, dry	24-27	
Brewers grain, spent, wet	25-30	
Brick, hard or soft	30	
Buckwheat	25-28	16-18
Cement, Portland	25-35	22-25
Cement, Portland, aerated	20	
Cement, Portland, bulk	25	
Cement, Portland, clinker	30-32	22-25
Chaff, lumpy	30	
Chalk, 100 mesh & under	30	
Chalk, lumpy	30	
Charcoal	30	22-27
Chromium ore (chromite)	30	
Cinders, blast furnace	28-30	23-25
Cinders, coal	28-35	25
Clay, calcined	30-32	
Clay, fry, fines	30-32	25-27
Clay, dry, lumpy	30-35	23-25

WWW.CEMANET.ORG has issued a non-transferable (1460) on Apr 24, 2017 to Patcharaporn Sritrakul, Siamlandgroup, Thailand

Material Description	Maximum Allowable Conveyor Incline (deg)	
	Deep Cleats	Shallow Cleats
Clay, wet	30	
Clover seed	20	17-18
Coal, anthracite, briquettes	25	17
Coal, anthracite or bituminous, fines	30-35	25
Coal, anthracite or bituminous, lumps only	30-32	21
Coal, anthracite or bituminous, run of mine	30-32	21-23
Coal, lignite	30-32	27
Coke breeze	30-32	25
Coke, loose	30-32	23
Coke, petroleum calcined	30-32	25-27
Concrete	30-45	17-20
Copper ore, crushed	30-36	25
Copper sulphate	30	22
Corn, ear	28-30	
Corn, shelled	25-28	15
Cornmeal	30-32	
Cottonseed, dry, de-linted	26-30	21
Cottonseed, dry not de-linted	30	24
Cottonseed cake, crushed	30	
Cryolite, lump	30	
Cullet, (glass scrap)	30	25
Dolomite, lumpy	30-32	27
Earth, as excavated, dry	40	25
Earth, dry , loamy	30-32	
Earth, wet, containing clay	40-45	28
Feldspar 3 inch & under or sand	28-30	21-22
Fertilizer, pellets	25	
Fertilizer, fine grained	30	
Ferrous sulphate	25-30	
Flaxseed cake	28-30	
Flour	25-30	25
Fluorspar 3 inch & under	30	
Foundry refuse, old sand cores, etc.	30	
Gelatin, granulated	28-32	
Gluten, meal	25-28	
Grain, whole	23-28	18-20
Grain, distillery, spent, dry	25-27	
Granite, crushed	28-32	
Graphite, flake	23-25	
Gravel	30-35	17-25
Gypsum dust, non-aerated	28-30	
Gypsum, 3 inch & under	30	20
Guano, dry	28	
Hog Fuel	28-30	22
Ice, crushed	18-22	
Ilmenite (titanium) ore	30	
Iron ore, crushed	30-32	23-25
Iron ore, pellets	23-26	18-20

WWW.CEMANET.COM Downloaded this document (14604) on Apr 24, 2017 to Rattapon Sirivarodi, Suanluang, , Thailand

Material Description	Maximum Allowable Conveyor Incline (deg)	
	Deep Cleats	Shallow Cleats
Iron oxide, pigment	28	
Kaolin clay, 3 inch & under	28	24
Kaolin talc, 100 mesh	30	
Lead ore, fine	30	
Lead oxide	30	
Lime, ground 1/8 inch &under	30	25
Lime, hydrated, 1/8 inch & under	28	23
Lime, hydrated, pulverized	25-28	24
Lime, pebble	28-30	22
Limestone, crushed	30	23
Limestone, dust	28-30	25
Linseed meal	28	25
Litharge, pulverized	28-30	
Loam, dry	25	
Loam, wet	35	
Lumps, general, mixed to 2 inch	35	
Lumps, general, mixed to 4 sized to 3 inches	30	
Lumps, general, mixed to 6 sized to 4 inches	28	
Magnesium chloride	30	
Magnesium sulphate	28-30	
Manganese ore	28-32	25
Manganese sulphate	28-30	
Marble, crushed, 1/2 inch & under	30	
Marl	30	
Mica, ground	25-28	23
Molybdenite	30	25
Mortar, wet	28-30	
Mud, dry	35	
Mud, wet	30	
Nickel-cobalt sulphate ore	28-30	
Oats	24-27	15
Oats, rolled	25-28	
Oil sand		23
Oil shale		23
Peanuts in shells	30	
Peanuts, shelled	25	
Peas, dried	25	
Phosphate, acid, fertilizer	28	18
Phosphate, ground fertilizer	30	28
Phosphate rock, broken, dry	30	17-20
Phosphate rock, pulverized	30	17-18
Phosphate sand, wet	30	
Potash ore	30	
Potatoes	30	20
Pumice, 1/8 inch	30	
Pyrites, iron, 2 to 3 inches lumps	28	
Quartz, 1/2 inch screenings	30	
Rice, polished	25	13-15

WWW.CEMANET.ORG has issued this document (1460) on Apr 24, 2017 to Patcharaporn Srivaddhanaprapha, Siamlandgroup, Thailand

Material Description	Maximum Allowable Conveyor Incline (deg)	
	Deep Cleats	Shallow Cleats
Rock, hard, crushed	30-32	22-25
Rock, soft, excavated with shovel	30-35	25
Rubber, pelletized or reclaimed	28-30	23
Rye	30	13
Salt, common, dry, coarse	30	23-25
Salt, common, dry, fine	28	16
Salt, cake, dry, coarse	30	25
Saltpeter	28	
Sand, bank, damp	30-35	23-27
Sand, bank, dry	25-30	20-22
Sand, foundry, prepared	30-35	27
Sand, foundry, shakeout	28	25
Sand & gravel, mixed	30	25
Sand & gravel, saturated		17
Sand, silica, dry	25	15-20
Sandstone, broken	30	
Sinter, iron	30	
Slag, blast furnace, crushed	32	15
Slate, crushed, 1/2 inch & under		20
Slate, dust		25
Soap chips	25	
Soap, powder	25-27	
Soapstone, talc, lumps	30	
Soda ash, briquettes	25	12
Soda ash (Trona)		22
Soda ash, heavy or light	28-30	22-25
Sodium aluminum sulphate	28-30	
Sodium bicarbonate	28-30	
Sodium nitrate	28-30	15-17
Soybeans	30	17-21
Soybeans, cracked	25	20-22
Soybean cake, over 1/2 inch	28-30	22
Sugar, granulated	22-25	
Sugar, raw, cane	30	
Sulphate, crushed, 1/2 inch & under		25
Sulphate, powdered		26
Sulphate, 3 inch & under		23
Sulphur, lumpy	27-30	
Sulphur, ore	30	
Sulphur, powdered	27-30	
Urea prills	20	
Walnut shells, crushed	30	
Wheat	25-30	
Wood Chips	30	25
Zinc ore, crushed	30	
Zinc ore, roasted	30	27

WWW.CEMANET.COM Copyright document (14604) on Apr 24, 2017 to Pagrapron Sritalong, Suanluang, , Thailand

Table 10.5
Guide to maximum allowable angles of inclination with molded cleat belts

POCKET BELT CONVEYORS

Types of Pocket Belt Conveyors

Pocket belts, as they are generically called, encompass the entire range of steep angle conveying from 20° to 90° inclines. There are two main models of pocket belts. The most common model is that shown in Figure 10.6. Flexible corrugated sidewalls have been bonded to the edges of the belt, along with transverse cleats spanning between the sidewalls. These additions form complete rectangular partitions or "pockets" for the material to ride in as shown in Figure 10.6. The sidewalls allow the belt to convey a large cross-section of material with the belt in a flat position. The sidewalls and cleats increase the load carrying capacity over normal belt conveyors and even belt conveyors with molded cleat belts up steep inclines. Pocket belts can even elevate materials to the ultimate in steep angle inclines (i.e. vertical). This model of pocket belt can elevate material to 1,000 feet (305 m) at capacities of 1,000 tph (907 mtph) and for short lifts like on board self-unloading ships (Figure 10.8), capacities of 6,000 tph (5,440 mtph) are possible.



Figure 10.6
Typical pocket belt for incline elevating

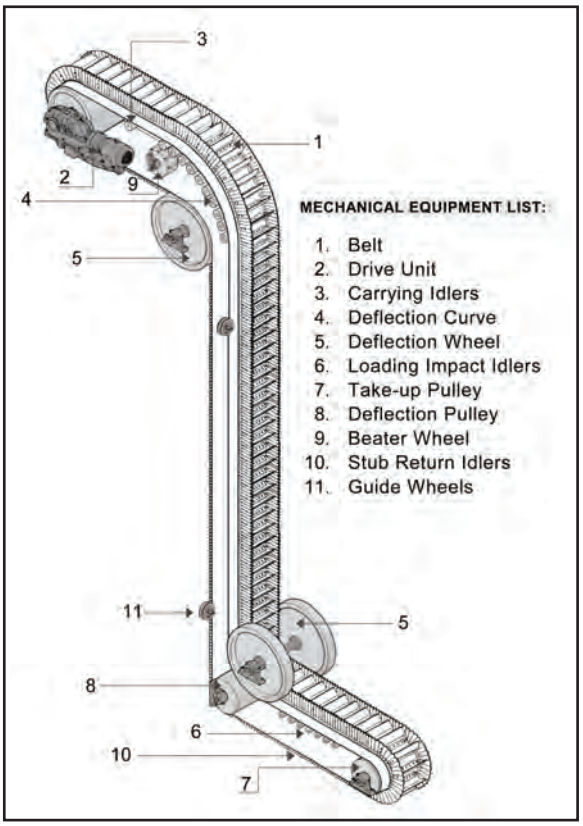

Figure 10.7
Typical pocket belt for vertical elevating

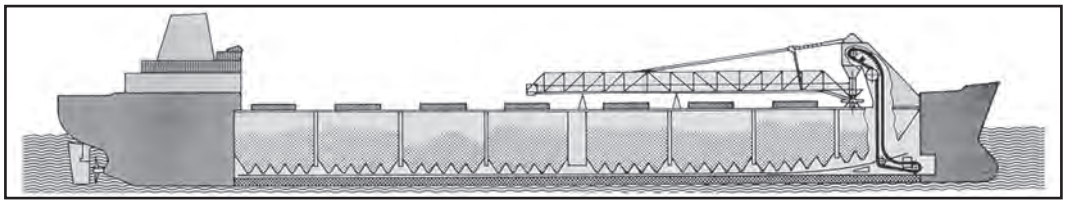

Figure 10.8
Pocket belt located in the bow of a self-unloading ship

Figure 10.7 illustrates the mechanical equipment required for a typical vertical system using these types of belts. A pocket belt system uses many of the same standard mechanical components that conventional conveyors use. The drive is the same as that required for a conventional conveyor. That is the motor, high speed coupling, reducer and low speed coupling. A holdback is a definite requirement to prevent anti-reversal when loaded. The drive's reduction ratio might be a little higher than normal with pocket belts, due to the required drive pulley diameter. Normally larger diameter pulleys are required with pocket belt systems to prevent the sidewalls from being over stressed. Although at times the pulleys used are slightly larger than would be used on a conventional conveyor they are still CEMA Standard pulleys. Pulleys used on a particular system are generally all the same diameter.

Minimum pulley diameter is based on the bending fatigue limit of the sidewalls or that required for the base belt whichever is the largest. For short sidewalls the base belt governs. For the higher sidewalls they will govern pulley diameter required. Pulleys are always straight faced and are never crowned as the special cross-rigid belting has a high modulus. Snub pulleys are never used and are not required. The weight of the belt and the take-up tension, is more than enough to supply the slack side tension that is required for driving. Special deflection wheels, Figure 10.9 must be used when the belt needs to be deflected in a concave fashion (i.e. so the sidewalls are in compression). The deflection wheel diameter is based on the bending fatigue of the sidewalls.

Because the deflection wheels place the sidewall in compression, and their bending fatigue is less in compression than tension, the wheels are often a larger diameter than the pulleys. The idlers used to support the belt and material on the carrying side, are basically CEMA standard flat belt idlers. In the deflection curve at the top of the pocket belt, standard flat belt idlers maybe used but the loading from the radial component of the belt tension, often requires that live shaft idlers be used instead. The return support is somewhat special and is shown in Figure 10.10. These idlers are suitably named "stub return" idlers and are canted at 3° or 5° depending on the belts flexibility. The 3° is used with steel cord belts and the 5° with fabric carcass belts. Where the upper and/or lower horizontal runs are short enough, no support is required and the belt is allowed to free sag up to 4%. Also note that over a 70° of inclination, no carrying or return support is required.

As the stretch in a pocket belt is minimal, even those with a fabric carcass, only short take-up travel is required. The take-ups are normally standard protected screw take-ups. On high capacity systems, horizontal gravity or hydraulic take-ups are used to impart a more accurate baseline tension in the belt. For belt cleaning, a self-driven belt beater that raps the belt and twists it slightly laterally are used as illustrated in Figure 10.11.

WWW.CEMANET.ORG has a non-transferable document (2016) 0 Ref: 4-2017 to Padmini Sankar, Suantech, India

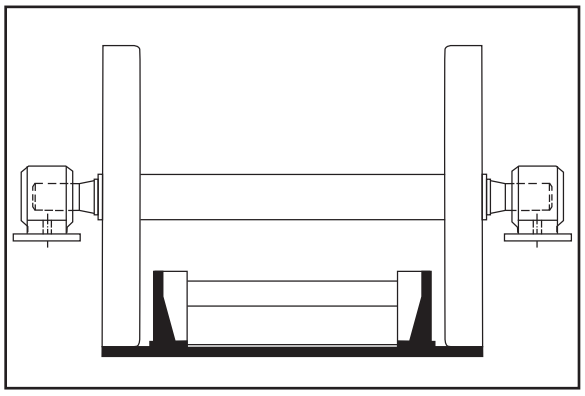

Figure 10.9
Deflection wheel cross section

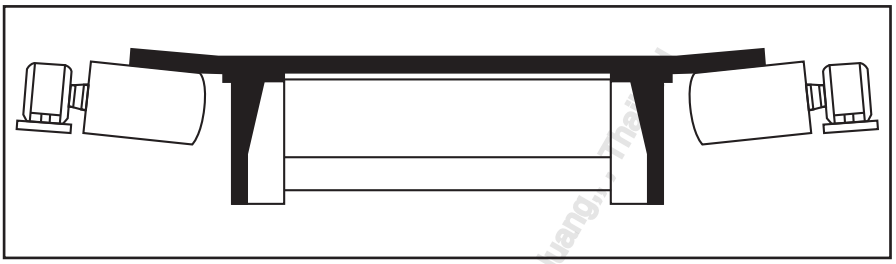

Figure 10.10
Typical return support for pocket belt

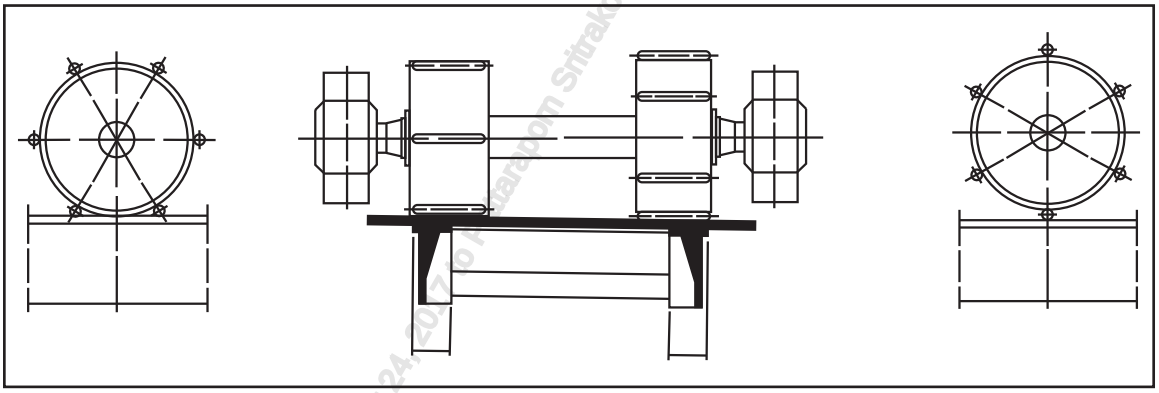

Figure 10.11
Beater bar belt cleaner for pocket belt

Pocket belts of this type of model are available in operating strengths from 115 PIW to 950 PIW (20 to 166 N/mm) for fabric belts and 570 PIW to 3600 PIW (100 to 630 N/mm) for steel cord belts. Most use a cross-rigid fabric carcass or steel cord type belting. The cross-rigid reinforcement is obtained with either a fabric or woven steel above and/or below the normal longitudinal (warp) tensile carcass. This is to prevent bowing at the deflection wheels and sagging at the return supports. Where the design requires the use of deflection wheels and/or stub returns then the sidewalls are set back from the edge of the belt providing what is termed free lateral space for the deflection wheels and/or stub returns. The free lateral space reduces capacity but is a must when required by the design. Otherwise the sidewalls are taken to the edge of the belt.

Sidewalls in the heavier duty ranges are fabric reinforced vulcanized rubber. They are available in numerous sizes as shown in Figure 10.12. They range from a very short and 100% rubber 1-1/2 inches (38 mm) high design to the 16 inch (400 mm) high fabric reinforced. Their corrugated design allows them to negotiate the bending around pulleys and deflection wheels, where the top edges of the sidewalls must expand or contract as necessary. Pulleys and/or deflection wheel diameters that are too small in diameter will drastically reduce the bending fatigue life of the sidewalls.

www.CEMAnet.org - Use is subject to applicable terms - Downloaded on Apr 24, 2017 by Narongdech Sritrakool, Suanluang, Thailand

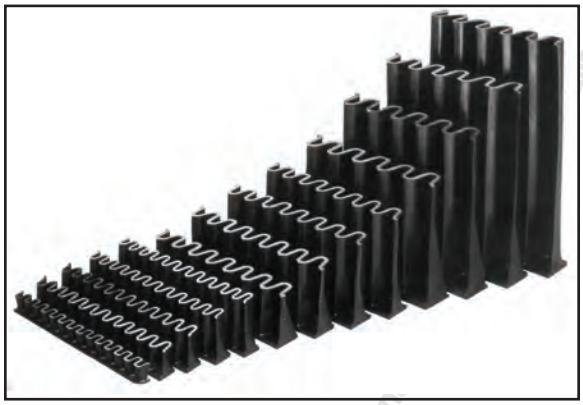

Figure 10.12
Corrugated sidewalls

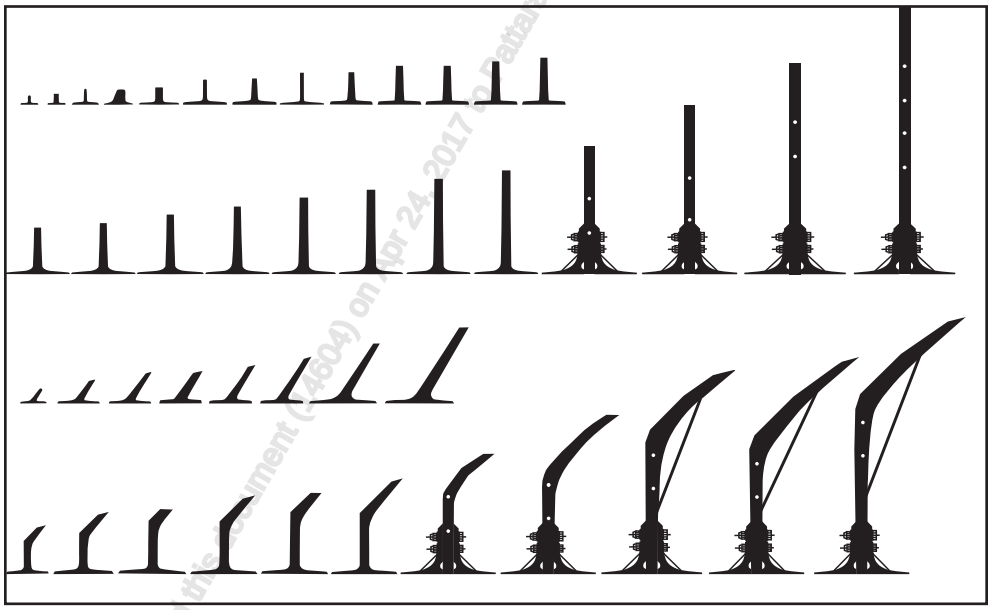

Figure 10.13
Range of cleat sizes and styles

Cleat Designs

There are numerous cleat designs as illustrated in Figure 10.13. From 3/4 inch (19 mm) high light duty cleats that are 100% vulcanized rubber, up to extremely heavy duty 16 inch (400 mm) high cleats, that are fabric reinforced, reinforce with rubber stiffeners across their width and that have u-bolts vulcanized in the ends, for fastening to the sidewalls. The largest cleats are two piece and bolted together at the base. Cleat spacing is a function of lump size and angle of incline. Figure 10.14 provides a general idea of how the material being carried vertically forms a 3D surcharge that must be taken into account in determining the volume flow rate. Although cleat designs are quite rugged, it is advisable to load the material on a pocket belt with as much forward velocity as possible, thereby reducing the amount of cleat wear.

Cleat and sidewall height, cleat spacing and the belt width, are sized on the capacity and lump size to be handled. Lump sizes up to 16 inches (400 mm) can be handled. In addition, cleats, sidewalls and belting can be obtained in most of the common rubber grades:

- Standard abrasion resistant
- Oil resistant
- Flame retardant
- Heat resistant
- Food Grade



Figure 10.14
3D surcharge angle as material is elevated vertically

Particular care must be taken when sizing Pocket belts for handling lumps. This is obvious from the photo in Figure 10.15. Improper sidewall/cleat sizing will cause problems handling lumpy material. Whether handling powder or lumps, a conservative approach to calculating the material cross-section goes a long way towards ensuring a problem free pocket belt system.



Figure 10.15
Lumps being elevated vertically

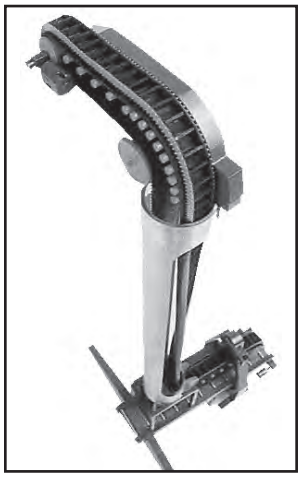

Figure 10.16
Pocket belt twisted 90 degrees vertically

To add to their versatility, pocket belts can be twisted about their vertical axis. Depending on height, this can be up to 90° as shown in Figure 10.16. The more twist required in the design, the greater the height required to accomplish the twist. This is in order to prevent over stressing the edges of the belt. Wider belts also require more height to accomplish the twist and prevent over stressing the edges of the belt.

WWW.CEMANET.ORG

Inner Pocket Belt Conveyors

There is another model of pocket belt system available that is mainly for the vertical elevation of material at high capacity and for high lifts. Two designs are shown in Figure 10.17 and 10.18. Illustrations are necessary since photos of such high lift units do not do them justice. As an example, Figure 10.19 shows a photo of the head station of this style of pocket belt being used in a tunneling operation. This example has a 682 foot (208 m)vertical lift and a capacity of 660 tph (599 mtph).

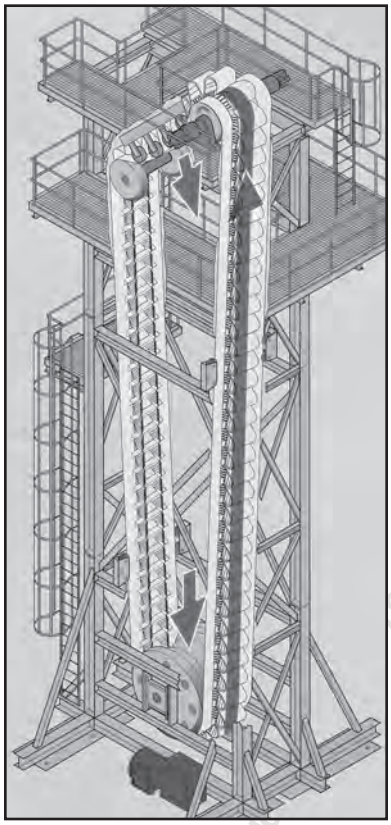

Figure 10.17
Typical inner pocket belt system

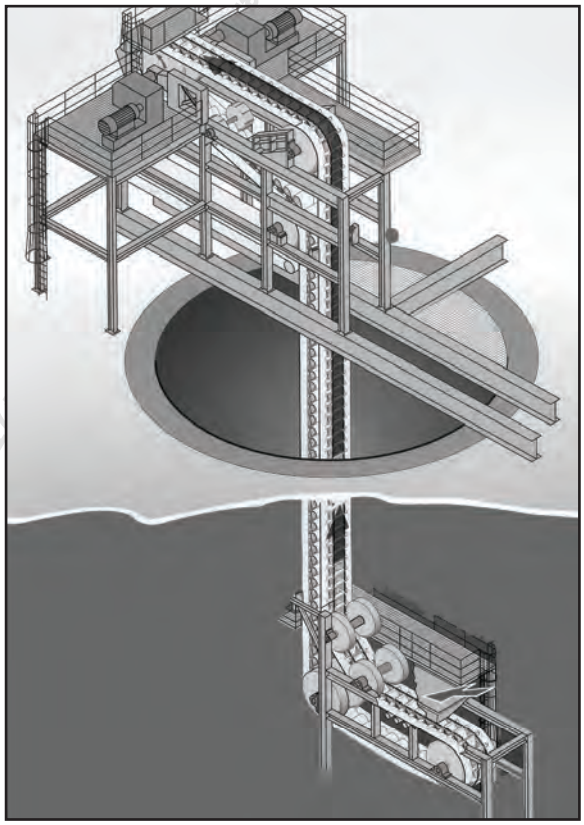

Figure 10.18
Typical "S"-shaped pocket belt system



Figure 10.19
Head station of an "S"-shaped pocket belt system

WWW.CEMANET.ORG has issued this d... on Apr 24, 2017

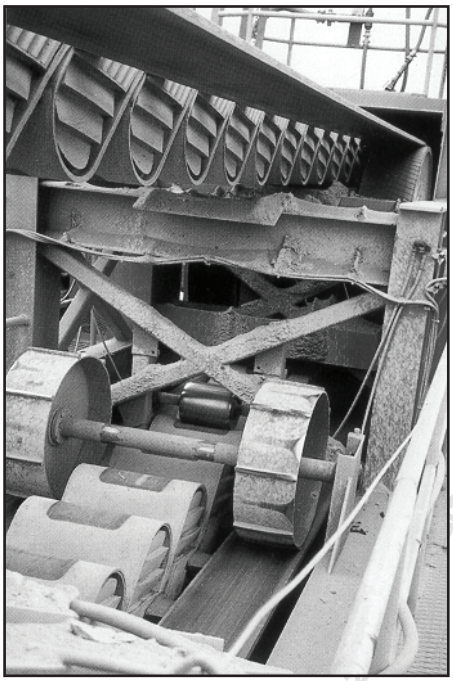

Figure 10. 20
Drive and belt cleaner



Figure 10.21
Vertical zone in access shaft

In order to extend the range over the previous models of pocket belts, this model separates the belt power transmission/tensile member function from the carrying/elevating material function. By separating the two functions there is no compromise in the design. Each can perform its function without being hampered by the other component. This model of pocket belt is made of four components. The first two components are narrow, high strength, steel cord belts of identical lengths. The third component is a triangular shaped cross bar that connects the two belts together and also holds adjacent pockets in position. This triangular bar is made of rubber, reinforced with a steel pipe in its center. The triangular cross-bar component transfers the weight of the pocket and material to the belts. The fourth component is very deep fabric reinforced rubber pockets to carry the material to be elevated. Each pocket is connected individually to the cross bars and are installed after installation of the main belt assembly. Each pocket may also be easily replaced on an individual basis if they get severely damaged during operation.

WWW.CEMANET.ORG has been granted a license by [illegible] on Apr 24, 2 [illegible] Apom Sritrakool, Suanluang



Figure 10.22
High lift capacity pocket belt



Figure 10.23
Pocket side view

The steel cord belts are made by necessity, endless and identical in length, using a very special manufacturing process. The belts need be of identical lengths to prevent one belt from running ahead of the other and skewing the cross-bars. The belts are factory spliced using normal steel cord belt splicing methods.

The inner type of this model of pocket belt can reach heights of 1,500 feet (458 m) at volume flow rates of 70,000 ft^3/h (1,982 m^3/h) at 1,000 fpm (305 m). The 'S'-shape configuration can also reach 1,500 feet (458 m) but at a reduced volumetric capacity of 30,000 ft^3/h (850 m^3/h) at 1,000 fpm (5.1 m/s). In addition the 'S'-shape configuration can provide a volumetric capacity of 150,000 ft^3/h (4,250 m^3/h) at 1,000 fpm (5.1 m/s) at the 115 foot (35 m) lifts common on board self unloading ships.

With proper care the tension calculations of Chapter 6 can be modified to handle pocket belt type designs. It is recommended that a CEMA Member's expertise be sought for assistance in designing these systems.

Flexible Cleat Pocket Belt Conveyors

A flexible U-shaped cleat is an alternate configuration for a pocket belt that uses the flexible corrugated sidewall material to form a radius cleat, resulting in a "half-moon" shaped pocket. The advantages over the rectangular partitions offered by a traditional pocket belt include:

- Automatic centering of the material as the belt traverses an incline. Overloaded pockets "spill" to the center, falling into the center of the trailing cleat.
- No loss of fines that migrate to the ends of cleats in a traditional pocket belt configuration because the radius cleats "overlap" one another, effectively sealing the edges from spillage.
- The belt can be operated in a troughed configuration, even with relatively tall cleats.
- The corrugated cleats tend to self-clean when the corrugations open as they pass over the terminal pulley.

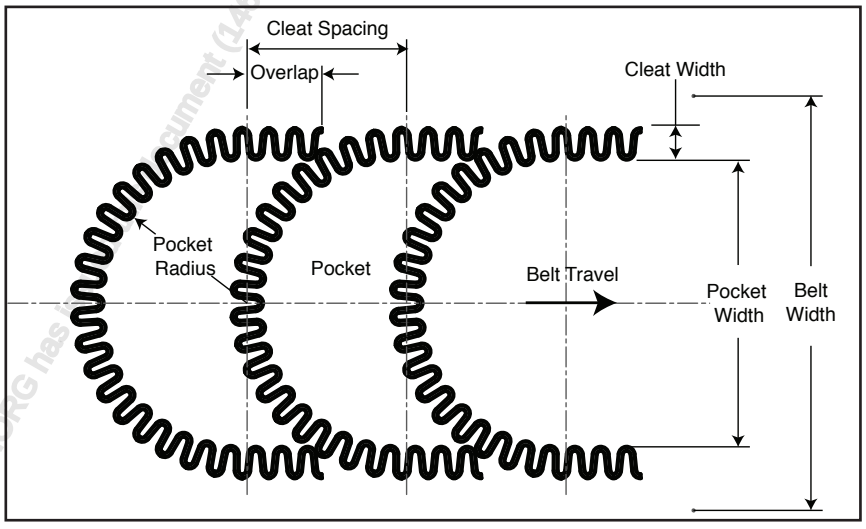

Figure 10.24
Typical flexible cleat and pocket arrangement

Flexible cleat pocket belts are effective up to an incline of approximately 75° and can be loaded on the inclined portion of the belt if desired, often times eliminating the need for deflection wheels. Typical capacity charts for flat belts of various widths are shown in Table 4.41 and 4.45. As a general rule of thumb, the capacities shown in Table 4.41 and 4.45 should be reduced for a troughed configuration as indicated in Table 10.25.

WWW.CEMANET.ORG has licensed this document (14604) to [illegible] on 2021-04-26. For personal use only.

Q_{flat} Typical Capacities for Flat Flexible Cleat Belts at 45 Degree Incline* tph @ 100 fpm and 100 lbf/ft³ (mtph@0.5 m/s and 1600 kg/m³)				
Belt Width in (mm) Cleat Width x Spacing in (mm)	Cleat Height in (mm)	Surcharge Angle		
		10 deg.	20 deg.	30 deg.
18 (457) 2.0 × 7.0 (50.8 x 177.8)	2.0 (50.8)	4.9 (4.3)	7.8 (6.9)	13.5 (12.0)
	2.5 (63.5)	8.5 (7.5)	13.4 (11.9)	21.2 (18.8)
	3.0 (76.2)	13.3 (11.8)	20.5 18.2)	29.8 (26.4)
	4.0 (101.6)	26.6 (23.6)	37.3 (33.1)	48.5 (43.0)
	5.0 (127.0)	43.4 (38.5)	55.9 (49.6)	67.6 (59.9)
	6.0 (152.4)	61.9 (54.9)	75.0 (66.5)	86.6 (76.8)
24 (610) 2.0 × 10.0 (50.8 x 254.0)	2.0 (50.8)	4.1 (3.6)	6.5 (5.8)	12.2 (10.8)
	2.5 (63.5)	7.2 (6.4)	11.4 (10.1)	21.0 (18.6)
	3.0 (76.2)	11.3 (10.0)	17.8 (15.8)	31.8 (28.2)
	4.0 (101.6)	22.9 (20.3)	36.2 (32.1)	57.3 (50.8)
	5.0 (127.0)	39.5 (35.0)	60.5 (53.6)	86.4 (76.6)
	6.0 (152.4)	61.5 (54.5)	88.3 (78.3)	117.3 (104.0)
36 (914) 2 × 16 (50.8 x 406.4)	2.0 (50.8)	3.3 (2.9)	5.2 (4.6)	9.7 (8.6)
	2.5 (63.5)	5.7 (5.1)	9.1 (8.1)	16.9 (15.0)
	3.0 (76.2)	9.0 (8.0)	14.3 (12.7)	26.6 (23.6)
	4.0 (101.6)	18.4 (16.3)	29.1 (25.8)	54.2 (48.1)
	5.0 (127.0)	31.9 (28.3)	50.5 (44.8)	91.2 (80.9)
	6.0 (152.4)	50.0 (44.3)	79.2 (70.2)	134.5 (119.3)
48 (1219) 2 × 22 (50.8 x 558.8)	2.0 (50.8)	2.8 (2.5)	4.5 (4.0)	8.3 (7.4)
	2.5 (63.5)	4.9 (4.3)	7.8 (6.9)	14.5 (12.9)
	3.0 (76.2)	7.7 (6.8)	12.2 (10.8)	22.8 (20.2)
	4.0 (101.6)	15.8 (14.0)	25.0 (22.2)	46.6 (41.3)
	5.0 (127.0)	27.4 (24.3)	43.5 (38.6)	81.0 (71.8)
	6.0 (152.4)	43.1 (38.2)	68.2 (60.5)	126.7 (112.3)
60 (1524) 2 × 28 (50.8 × 711.2)	2.0 (50.8)	2.5 (2.2)	4.0 (3.5)	7.4 (6.6)
	2.5 (63.5)	4.4 (3.9)	6.9 (6.1)	12.8 (11.4)
	3.0 (76.2)	6.9 (6.1)	10.9 (9.7)	20.2 (17.9)
	4.0 (101.6)	14.0 (12.4)	22.2 (19.7)	41.4 (36.7)
	5.0 (127.0)	24.4 (21.6)	38.7 (34.3)	72.1 (63.9)
	6.0 (152.4)	38.4 (34.1)	60.8 (53.9)	113.4 (100.6)
*For inclines less than 45 capacity increases and for inclines over 45 degrees capacity decreases.				

WWW.CEMANET.ORG has issued this document (14604) on NOV 2015 for Mohammad Shahbaz Khan, Pakistan

Table 10.25
Approximate capacities of flexible cleat belts

Troughed Flexible Cleat Belt Capacity Reduction	
Incline Angle (deg)	K Factor (dimensionless)
30	0.85
45	0.90
60	0.95
Q_{flat} = Flat Belt Capacity (See Table 10.25)	
$Q_{troughed} = K \times Q_{flat}$	

Table 10.26
K, Capacity reduction for troughed belt with flexible cleats

Advantages of Pocket Belt Conveyors

- Incline angles up to 90 degrees are possible.
- Fewer mechanical components are required, particularly at steep angles of incline.
- Medium capacity, high lifts can be accomplished.
- Some designs of vertical units can be twisted about their vertical axis.
- Relatively small radii concave and convex bends can be used.
- Very fine, dry materials can be elevated vertically.
- No maintenance access is required up the vertical portion of units inclined at 70 degrees or more.
- Economics of elevating at steep angles or vertically

Disadvantages of Pocket Belt Conveyors

- The belt is more expensive than standard conveyor belting.
- Lump size is somewhat limited particularly at high angles of incline.
- Sidewalls and cleats are susceptible to damage.
- Belt training must be maintained accurately to keep from damaging the sidewalls.
- The belt is more difficult to clean than standard conveyor belts. Belt beaters, air knives, water spray or a wash trough must be used.

TOTALLY ENCLOSED BELT CONVEYORS

A family of belt conveyors known as "Pipe" or "Tube" conveyors, "Fold" belts, and "Suspended" belts totally enclose the material. They are best known for their ability to negotiate tight horizontal, vertical and even compound curves in difficult overland topographies or congested plant process areas and their environmental friendliness. They also, allow material to be conveyed up increased angles of incline. Research has shown that as the ratio of material cross-sectional area to the contact perimeter with the belt (technically known as the hydraulic radius) decreases, the greater the attainable angle of inclination. It is this mechanism that allows the increase in the conveying angle for these belts. All members of this family of conveyors use proprietary belting. They all allow cost effective belt line arrangements, and can run at normal or faster conveyor belt speeds. This ability over conventional conveyors however comes at a cost. The cost is a decrease in the allowable capacity for a given belt width. The greater the adaptability of the conveyor to torturous paths, the lower the relative capacity for the belt width can be expected.

Copyright © Bulk Solids Handling Society (BSHS) this Document (2014) on Apr 24 2014 by Pattarapol Sritrakool, Suanluang, , Thailand

There are many methods to convey bulk material, but there is no one technology that is right for all applications. This is also particularly true of 'Totally Enclosed Belts'. Suggest that the total cost of ownership, that is the capital costs, including land acquisition costs, and operational costs over the projected life of the conveyor or facility be analyzed to help select one of these technologies.

Pipe conveyors are the most prolific of the 'Enclosed Belt' technologies with many installations around the world. But, all the steep angle conveying technologies mentioned are well suited for many applications. Just some of the advantages of 'Totally Enclosed Belts' are:

- Dust free installations
- Very good for environmentally sensitive areas
- Can also work on return runs and protect the material from the surrounding environment.
- No need for expensive covers except for protection from heavy wind and rain. Or extra protection from heavy wind and rain.
- Keeps in process heat where desirable for energy savings.
- Like standard conveying, allows for multiple load points, two way conveying, intermediate drives, belt scales, etc.
- Eliminates belt edge damage that occurs with conventional conveyors when they misalign.
- Generally allows for a minimum 50% increase in the attainable angle of incline over conventional conveyors.

Pipe/Tube Belt Conveyors

There is a family of designs known as "Pipe" or "Tube" conveyors. These designs utilize a flat belt that is formed into a tubular shape, with a slight overlap, and kept in that shape by a hexagonal arrangement of idler rolls as shown in Figures 10.27 and 10.28. Most of these systems are in a regular hexagon arrangement so the pipe/tube , due to its stiffness, assumes an almost circular shape. Note that with pipe/tube conveyors certain parameters are normally referred to in terms of the nominal diameter "d" of the pipe/tube , much like the belt width "BW" in conventional belt conveyors. This pipe/tube conveyor nomenclature shall be followed in this section where applicable.



Figure 10.27
In-line hexagonal arrangement of idlers



Figure 10.28
Offset hexagonal arrangement of idlers

The tube is formed with the dirty top cover on the inside, both carrying and return runs. The overlap provides an effective seal along the carrying run to protect the environment from the material and/or vise versa. Along the return run, the overlap again provides an effective seal and prevents any carryback from contaminating the environment. Any environmental/house keeping problems are confined to the head and tail ends of pipe/tube conveyors.

WWW.CEMANET.ORG has issued this document to Peter Smith, Suanluang, Thailand on Apr 25 2017 to Peter Smith

Basic Components of Pipe/Tube Conveyors

Figure 10.29 provides an illustration of a typical complete system. Such a system, starting at the tail pulley where the belt is flat, consists of:

- A tail pulley in a horizontal gravity take-up carriage
- A tail end and carrying side transition zone: The belt transitions from flat at the tail pulley to troughed at the beginning of the loading area.
- A tail end loading area: The remaining transition zone from the loading area to the pipe/tube shape. The belt transitions from its troughed shape at the loading zone to the completely enclosed pipe/tube shape.
- A series of closely spaced panels for most of the conveyors length: The rolls in the top half of the panel maintain the belt in a tubular shape, support the weight of the belt and the material being conveyed.
- A head end transition zone: The belt transitions from its pipe/tube shape to flat at the head end discharge pulley.
- A head end discharge pulley: Typically the head pulley is also the drive pulley.
- A head end return transition: The belt transitions from its flat shape at the head discharge pulley to the fully enclosed pipe/tube shape.
- The series of closely spaced panels with rollers in the bottom half of the panels maintain the belt in its tubular shape until the tail end.
- A tail end transition along the return: The belt transitions from its pipe/tube shape to flat at the tail pulley.

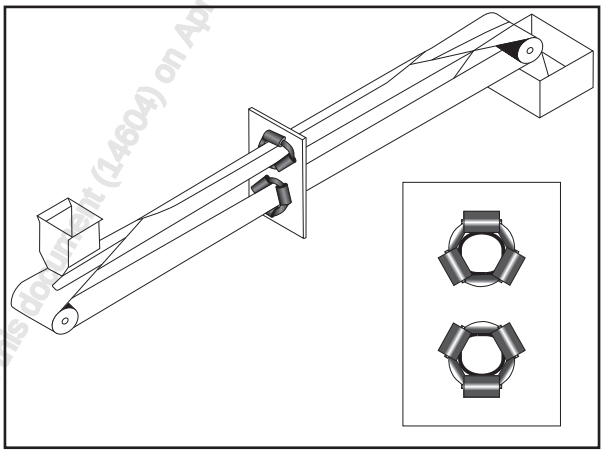

Figure 10.29
Simplified illustration of a pipe/tube conveyor system

Other possible system configurations include:

- In lieu of driving the head end discharge pulley, a return side drive usually located near the head end can be used, but it must be remembered that the belt must be flat to go around any pulleys so the pre-requisite transition zones are required either side.
- Tail end drive for regenerative conveying.
- Head and tail end drives for long overland conveyors.
- A vertical gravity take-up at the head end on the slack (return) side of the drive pulley in lieu of the tail end horizontal gravity take-up.
- Intermediate loading zones can be utilized in the design but it must be remembered that the pipe/tube shape must be transitioned to the troughed shape at the intermediate loading zone and back again afterwards.

www.CEMA-ONLINE.ORG has issued this document (14604) on Apr 24, 2017 to Patrick Kom Sitrakul of Sualung, Thailand

•A reduced number of return rollers are often employed due to the lower amount of belt support required. Two way conveying is just as easily accomplished with a pipe/tube conveyor as it is with conventional conveyors. A belt turnover is used so that the material is loaded onto the dirty side of the belt and this also insures that the overlap is in the 12 o'clock position for optimum sealing.

Belt Construction for Pipe/Tube Conveyors

By necessity, the belt is of a special type of construction, specific to pipe/tube conveyors. It must have the required characteristics that allow it to close and open properly at the head and tail ends, maintain the pipe/tube shape particularly in tight curves, and maintain a good seal in the overlap zone while it is between idler panels. Standard conveyor belting does not have the necessary characteristics for use in a pipe/tube conveyor except under dire emergencies. The belt must have the requisite transverse flexibility and rigidity, and the longitudinal flexibility for use in a pipe/tube conveyor. The belt needs to have a higher transverse rigidity than a belt used with conventional conveyors. This is so the belt will want to unfold on its own at the transitions. However, if the belt has too high a transverse rigidity, then the power consumption will increase dramatically. A high transverse rigidity is also known to be a requirement for maintaining good belt training. The longitudinal flexibility is required to allow the tight curves that pipe/tube conveyors are best known for, without overstressing the belt. Figure 10.27 and 10.28 show typical textile and steel cord belt constructions.

Although there is a strong need for just the right amount of transverse rigidity in the belt, the belt edges in the overlap zone must still be flexible to seal adequately. This is accomplished in many ways. One is by having the belt constructed so that the edges have little reinforcement in the overlap zone, and the middle portion of the belt having a higher than normal transverse rigidity. In the smaller pipe/tube diameters this is done by increasing the skim rubber thickness between the plies in the middle portion of the belt and leaving the belt edges of normal construction for the flexibility. For larger pipe/tube diameters it becomes difficult to get the required transverse rigidity in this manner. Belt manufacturers must resort to other methods such as increasing the number of plies, the hardness of the covers and/or skim rubber, increasing the thickness of the covers and/or skim rubber, and/or choosing a fabric's transverse reinforcement, with a higher elastic modulus in the transverse direction such as polyester, or a fabric with less crimp, thicker threads, etc.

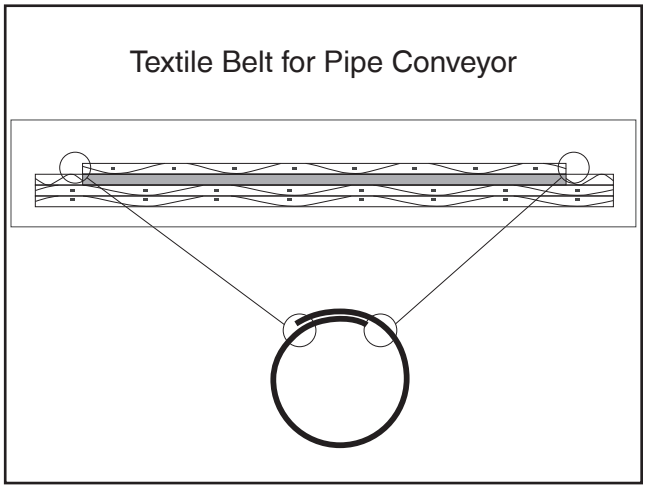

Figure 10.30
Typical fabric pipe/tube conveyor belt construction

WWW.CEMANET.ORG has issued this document (1460) on Apr 2, 2017 to [illegible]

Steel cord belting for pipe/tube conveyors provides a challenge for belt manufacturers, due to its high transverse flexibility. One method to obtain the required transverse rigidity is to install transverse reinforcement above and/or below the steel cords. The topside transverse reinforcement is usually made from 100% synthetic fabrics and does not extend the full width of the belt to increase the flexibility of the overlap zone. The bottom transverse reinforcement is usually made from relatively stiff steel cord weft members with synthetic fabric in the warp direction. The bottom transverse reinforcement normally spans the full width of the belt and in addition are located a distance from the steel cords to increase the transverse rigidity of the belt.

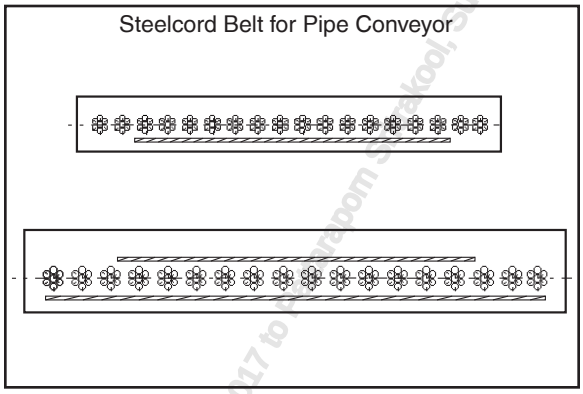

Figure 10. 31
Typical steel cord pipe/tube conveyor construction

Pipe/tube conveyor belts can be obtained in the following constructions:

- Nylon-nylon (P)
- Polyester-nylon (EP)
- Aramid (D)
- Aramid-nylon (DP)
- Steel cord (St)

The belts can also be obtained in all the usual cover grades to suit the application:

- Cut resistant
- Abrasion resistant
- Oil resistant
- Turpentine resistant
- Self-extinguishing
- Anti-static
- Flame retardant
- Heat resistant
- Energy saving
- Combinations of the above

Note that because any high temperature material is fully enclosed by the belt, heat resistant pipe/tube conveyor belts do not allow as high a material temperature as with conventional conveyors. The ambient air cannot circulate and cool the material being conveyed or the return run of belt as is the case with conventional belt conveyors.

There are numerous pipe/tube conveyor belt manufacturers in the world. Although pipe/tube conveyor belts were proprietary in the early years, today's large number of potential suppliers means healthy competition, and a potential customer need not fear being tied to just one supplier.

www.EMAGEF.info has issued this document (14604) on Apr 24, 2017 to Politeknik Sultan Idris Shah, Sekolah, Sekolah, Sultan Idris Shah, Malaysia

Capacities of Pipe/Tube Conveyors

Table 10.32 provides a guide to the allowable cross-sectional areas and capacities of pipe/tube conveyors. Since most pipe/tube conveyor designs and conveyor belts come from international sources, they have traditionally been based on hard metric dimensions. There is no reason that a pipe/tube conveyor cannot be built to hard Imperial units. The table however provides both metric and imperial units for convenience. There are no international standards for pipe/tube conveyors. The industry seems to have agreed only on the nominal diameters of the pipe/tube. The other parameters that contribute to the allowable capacity are determined by the pipe/tube conveyor designer in conjunction with the belt supplier. These parameters are the amount of belt overlap, flat belt width, actual pipe/tube diameter, and belt thickness. The amount of overlap is usually 3 to 4 inches (75 to 100 mm) for small pipe/tubes up to 10 to 12 inches (250 to 300 mm) for the largest diameters.

The belt widths are usually hard metric. Most suppliers will build in 2 inch (50 mm) pipe/tube diameter increments with the actual flat belt width in 6 inch (150 mm) increments. Be aware that some manufacturers/designers may wish to use a narrower or wider belt than that assumed in Table 10.32. The actual pipe/tube diameter, that is the diameter that can be inscribed in the hexagon arrangement of idlers, will vary between manufacturers/designers as they adjust the belt width and overlap to their manufacturing and design preferences respectively. The thickness of the belt will have a slight effect on the capacity, as the capacity is based on the actual I. D. of the pipe/tube and not on its nominal diameter.

Nominal Pipe Diameter		Actual Pipe O. D.		Belt Width		Cross Sectional Area (75% Fill)		Nominal Capacity			
								Volumetric		Weight	
								100 fpm	1 m/s	@ 100 fpm @ 100 lbf/ft³	@ 1 m/s @ 1.6 t/m³
(in)	(mm)	(in)	(mm)	(in)	(mm)	(ft²)	(m²)	(ft³/h)	(m³/h)	(tph)	(mtph)
6	150	6.5	166	23.6	600	0.135	0.013	811	45	41	72
8	200	8.4	213	29.5	750	0.226	0.021	1,354	75	68	121
10	250	10.1	257	35.4	900	0.345	0.032	2,069	115	103	185
12	300	12.4	314	43.3	1,100	0.503	0.047	3,020	168	151	269
14	350	14.6	370	51.2	1,300	0.707	0.066	4,241	236	212	378
16	400	16.5	418	57.1	1,450	0.906	0.084	5,437	303	272	485
18	450	18.3	466	65	1,650	1.150	0.107	6,897	384	345	615
20	500	20.6	523	72.8	1,850	1.416	0.132	8,495	474	425	758
22	550	22.5	570	78.7	2,000	1.716	0.159	10,299	574	515	919
24	600	24.6	626	86.6	2,200	2.104	0.195	12,622	704	631	1,126
26	650	26.5	674	92.5	2,350	2.467	0.229	14,801	825	740	1,320
28	700	28.4	722	98.4	2,500	2.859	0.266	17,154	956	858	1,530
30	750	30.3	769	104	2,650	3.280	0.305	19,680	1,097	984	1,755
32	800	32.2	817	110	2,800	3.730	0.347	22,380	1,247	1,119	1,996
34	850	34.4	873	118	3,000	4.291	0.399	25,749	1,435	1,287	2,296

Table 10.32
A guide to pipe/tube conveyor capacities

WWW.CEMAT.ORG Licensed to CEMAT (CEMAT) on Sep 24, 2015 for Private Use (Central Conveyor Solutions, Thailand)

The allowable capacity of a pipe/tube conveyor is based on roughly 75% of the cross-sectional area of the actual pipe/tube I. D. This is increased to approximately 80 to 85% where there are no lumps and good feed control, down to 60% or lower when the material is very lumpy or feed control is poor. Also,

tight curves reduce the cross-sectional area that should be utilized. In comparison, the CEMA allowable standard cross sectional areas for conventional conveyors are based on the CEMA standard edge distance (0.055 × BW+0.9 (in) and an appropriate surcharge angle. As most designers do not utilize the full 100% CEMA allowable standard cross-sectional area, but more like 80% of the area, it is prudent to compare the 75% allowable pipe/tube conveyor cross-section with 80% of the CEMA maximum allowable standard cross section as provided in Tables 4.41 through 4.48 of this book. A comparison shows that the conventional conveyor has approximately 150% to 300% higher capacity than a pipe/tube conveyor for the same belt width. Although this would appear very significant, it is the design price to be paid for the many advantages that the pipe/tube conveyor has over conventional conveyors. The 150% to 300% range is due to the three possible trough angle variations (20°, 35°, 45°) and the material surcharge angle variations (0° to 30°) affect on the allowable cross-sectional area of conventional conveyors that does not affect the allowable capacities of pipe/tube conveyors.

Note that pipe/tube conveyors are very susceptible to severe damage from overfilling. Recommend that these conveyors be loaded via a feeder and not directly from a bin or hopper gate. In addition, an overfill condition sensor should be used at the loading zone to shut down the conveyor in the event of such a condition. To make up for their smaller allowable cross-sectional areas, pipe/tube conveyors are often designed to run at higher than the belt speeds typically used for conventional conveyors. Speed has much less affect on the material being handled by pipe/tube conveyors due to their totally enclosed nature.

There are still the localized problems at the tail end loading zone and the head end discharge zone, where belt speed will affect the material. These short distances where the pipe/tube is open must be taken into account when selecting the belt speed. The affect of higher belt speeds at the loading and discharge zone must obviously be taken into account in the overall design.

Small pipe/tube diameter conveyors, like conventional conveyors, have traditionally been used with small roll diameters and thus slow belt speeds. The slow belt speeds are used to keep the idler roll rotational speed within reason (650-750 rpm). The small roll diameters were also necessary to get the six in line rolls around the small pipe/tube diameter. With the newer offset roll panel designs, much larger roll diameters can be used on small pipe/tube conveyors and slow belt speeds are no longer a strict design requirement.

Lump size is typically 25% to 33% of the pipe/tube diameter when conveying at the 75% cross-section normally recommended. However, maximum lump size depends heavily on the percentage of lumps. Table 10.33 provides some guidelines. If the material has a high percentage of lumps then the lower value should be used. If it is just an occasional lump, then the higher value applies. Even larger lumps can be handled adequately as long as the filling ratio is appropriately reduced.

Caution needs to be exercised on this design point, as errant large lumps can cause severe damage to the belt, the idler rolls, and the structure. While large lumps can roll to the side of a conventional belt conveyor or even off onto the ground, such a lump has nowhere to go on a pipe/tube conveyor. Lump size control is very important, much more so than with conventional conveyors.

As can be seen in Figure 10.28, the structure width is always considerably less than that of a similar capacity conventional style belt conveyor. Between the head and tail terminals that is. A significant portion of the structure width is taken up by the access walkway necessary alongside. So a pipe/tube conveyor has only 65% of the width of the structure for narrow belts and 55% for wide belts. Where there is access from the ground, like the system shown in Figure 10.27, the pipe/tube conveyor has only about 35% to 45% of a conventional conveyors' horizontal space requirements. Because the structure is narrower and much deeper this fits in well with the structural design requirements for elevated structures. A savings will

CONVEYING TODAY has issued this document (10.4) on Apr 4 2017 to Patel Pipes Shivakashi (shivakashi@gmail.com)

usually result. Also due to the narrowness of the idler panels, only single sided access is usually required. The idler panels can be placed on their own footings and be self-supporting as shown in Figure 10.27 or alternately some designs can be stringer or truss mounted as shown in Figure 10.28.

By the necessity of their design, pipe/tube conveyors must have very long transition zones. The tubular shape can be roughly thought of as 180° troughing or slightly more due to the overlap. Just as 45° troughing requires a much longer transition zone than does 20° troughing in conventional conveyors, it is understandable that the pipe/tube conveyor transition zone needs to be very long, so that the belt edges are not over stressed even though the belt construction has little reinforcement in the edges. To shorten the transition length as much as possible, the head and/or tail pulleys are raised up to at least 1/2 d as shown in Figure 10.34. Like conventional conveyors, the length of the transition zone depends on numerous factors such as belt width, strength, tension, modulus and construction. Although a detailed calculation is warranted at times to establish the exact length, rules of thumb can be found in Table 10.39 for various types of belt constructions. Carrying side transition zone idlers are usually a combination of standard and special fixed and adjustable troughing angle idlers as shown in Figures 10.35 and 10.36. Wherever the belt closes, i.e. at the tail end transition on the carrying side and the head end transition on the return side, cantilevered rollers, known as finger or tuck rollers, are used to tuck the lower part of the overlap down under the upper part of the overlap. This reduces the damage to the belt edges from the chapping in the closure process when they are not used.

The head and tail end transitions on the return side require the use of some ingenious special transition idler designs to support the belt. Belt support is not required for small pipe/tube conveyor sizes but the larger units do require this support. The belt needs to ride on top of the return transition rollers. To make this possible the frames are curved with the rollers on the outside. The curve is only slight near the pulley but tightly curved in a horseshoe shape, towards the first idler panel. At some point near the panel, the belt is almost closed into its tubular shape and a well crowned roll on a single vertical support is used as shown in Figure 10.38.

WWW.CEMANET.ORG has issued this document (1404) on 4/4/2017 to [illegible] (Subscriber) , [illegible]

Nominal Pipe Diameter		Mostly Lumps		Occasional Lumps	
in	mm	in	mm	in	mm
6	150	1.5	38	2.0	50
8	200	2.0	50	2.5	60
10	250	2.5	60	3.25	80
12	300	3.0	75	4.0	100
14	350	3.5	90	4.5	115
16	400	4.0	100	5.25	133
18	450	4.5	110	6.0	150
20	500	5.0	125	6.6	165
22	550	5.5	140	7.0	180
24	600	6.0	150	8.0	200
26	650	6.38	160	8.5	215
28	700	7.0	180	9	230
30	750	7.38	190	9.75	250
32	800	8.0	200	10.38	265
34	850	8.5	215	11.0	280

Table 10.33
A guide to maximum lump sizes for pipe/tube conveyors

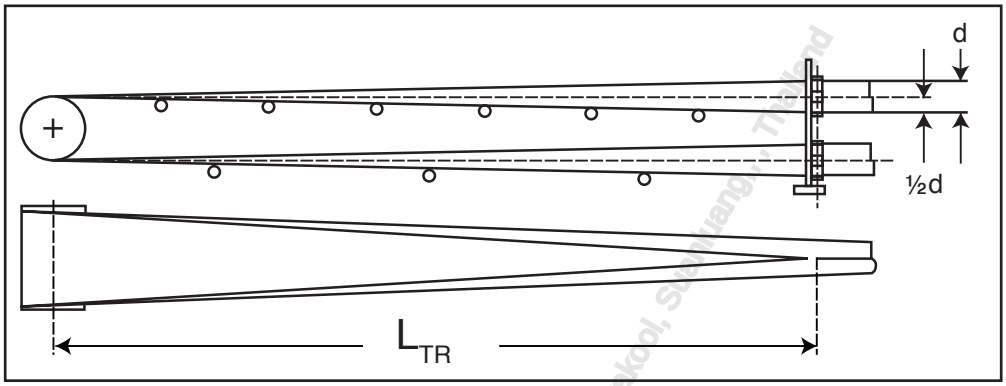

Figure 10. 34
Transition zone length



Figure 10.35
Typical pipe/tube conveyor transition zone



Figure 10.36
Typical pipe/tube conveyor transition zone



Figure 10.37
Pipe/Tube conveyor head end transition and material discharge



Figure 10.38
Pipe/Tube conveyor tail end return side transition support

has issued this document (14604) on Apr
rapom Sritrakool, Suranaree, Thailand

Belt Construction	Nominal Pipe Diameter "d"		Approximate Curve Radii "R_h"				Transition Length L_{TR}
	(in)	(mm)	< 25°	25° to 50°	50° to 75°	75° to 100°	
Nylon	6-12	150 -300	300 d	400 d	500 d	600 d	25 d
	14-20	350 -500	400 d	500 d	600 d	700 d	
Polyester Nylon	6-12	150 -300	400 d	500 d	600 d	700 d	30 d
	14-20	350 -500	500 d	600 d	700 d	800 d	
Aramid	6-12	150 -300	500 d	600 d	700 d	800 d	40 d
	14-20	350 -500	600 d	700 d	800 d	900 d	
Steel cord	6-12	150 -300	700 d	800 d	900 d	1000 d	60 d
	14-20	350 -500	800 d	900 d	1000 d	1100 d	

Table 10.39
A guide to required curve radii and transition zone lengths

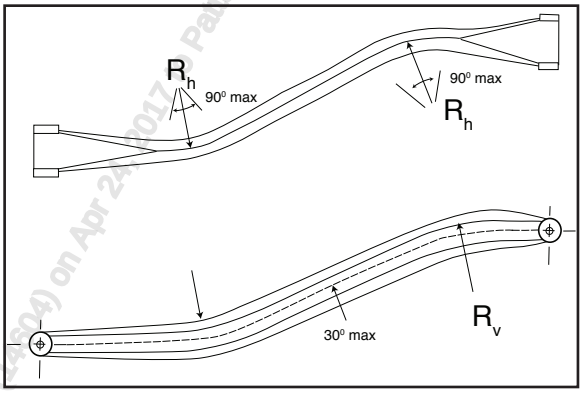

Figure 10. 40
Pipe/Tube conveyor curve radii terminology

www.CEMA.org Licensed to this document (1490104) on Apr 25th 2017 to Patel from Sinclair Systems Int'l, Thailand

Applications for Pipe/Tube Conveyors

Pipe/tube conveyors are best known for their ability to negotiate tight vertical, horizontal and compound curves, much tighter curves than conventional conveyors. Figures 10.41 and 10.42 are just two examples handling difficult applications. While conventional conveyors can handle horizontal curves in the order of 3,000 to 5,000 feet (915 to 1,525 m), the pipe/tube conveyor can handle horizontal curves of 300 to 700 d with nylon fabric belts and 700 to 1200 d with steel cord belts. Because pipe/tube conveyors have a symmetrical belt cross-section, the allowable vertical curve radii are the same as for horizontal curves. The incline in the vertical plane depends on the material being handled and is probably 30° maximum. The horizontal curve angle has been increased, due to past experience, to its present limit today of 100°. Refer to Table 10.39 and Figure 10.40 for some typical vertical or horizontal curve radii for various belt types in the small to medium pipe/tube conveyor sizes. Note the values depend on the curve angle. When special care is taken, these curve radii may be reduced. Be aware that too small a curve radius is one of the most common reasons for premature belt failure.



Figure 10. 41
Pipe/Tube conveyor traversing difficult terrain



Figure 10.42
Pipe/Tube conveyor negotiating a congested plant area

Pipe/tube conveyors, for the most part, can use standard CEMA pulleys. Care in design must be exercised however, since most of the experience is in using standard metric belt widths in conjunction with standard metric pulley widths. This combination has been found to work well. However, standard metric pulley widths are based on belt width plus 100 mm (4 inches). Use of CEMA Standard pulley widths, at belt width plus 2 or 3 inches (50 to 75 mm), may prove inadequate. If the center of the belt overlap, approaching a transition zone, either at the head end on the carrying side or at the tail end on the return side, is not exactly in the 12 or 6 o'clock position respectively, then the belt will unfold so it is offset significantly to one side of the pulley. An investment in a pulley face width of at least belt width plus 4 inches (100 mm) is well warranted. The true belt width, being probably a standard metric size, also needs to be taken into account when selecting the actual pulley face width to use.

Pipe/tube conveyors use either an in line hexagonal arrangement of idler rolls attached to a support panel or an offset arrangement where rolls are alternately placed on either side of the support panel as shown in Figures 10.44 and 10.45 respectively. The offset design allows easier use of 'standard' idler rolls because roll length is not as significant a factor than with in line designs. With in line designs, more often than not, a special roll length must be used to get the proper hexagon dimensions. Since CEMA is based on the interchangeability of complete idlers not rolls, it does not have standardized roll dimensions. The term 'standard', used above, refers to stock rolls from a specific vendor for standard CEMA idlers for conventional conveyors. Replacement rolls from most other CEMA Member companies will require special roll lengths and shaft ends be purchased.

A phenomenon occurs on the return run of pipe/tube conveyors known as 'reduction in diameter'. The pipe/tube wants to assume a smaller diameter than the carrying run. Although not entirely understood, one of the major reasons is that all the belt weight bears on the flexible overlap zone. Some designers for this reason utilize a smaller hexagonal arrangement of rolls in the return run. The resulting extra overlap allows for better return run sealing.

Pipe/tube conveyor technology has traditionally come from international sources. The preferred roll design has therefore been based on sealed for life, deep groove ball bearings. By necessity with pipe/tube conveyors, roll gaps must also be small (1/8 to 1/4 inch (3 to 6 mm) or at least less than the belt thickness) to prevent the exposed overlapped edge from getting caught in the gap should the belt twist (and it inevitably will). A major advantage of the offset panel design is that it has zero effective roll gap, due to the adjacent but alternating rolls overlapping slightly. The offset panel design also allows room for the grease

fittings and lines required for re-greasable taper roller bearing design rollers should they be preferred. The allowable panel spacing depends on numerous parameters the most important of which are:

- Pipe/tube nominal diameter
- Belt construction
- Local belt tension
- pipe/tube sag between panels
- Material weight
- Belt weight
- Curve radius

The panel spacing increases with increasing pipe/tube diameter. As the pipe/tube diameter increases, the bending stiffness in the longitudinal direction also increases, allowing it to resist the forces causing the pipe/tube to sag and the seal to open up. Conversely as the weight of the material increases the allowable panel spacing decreases as the weight of material tries to deflect the pipe/tube causing the seal to open. Curves also have a profound effect on the allowable panel spacing. As the curve radii become tighter, the allowable panel spacing must be decreased to prevent the pipe/tube shape from being crushed or buckled.

Table 10.43 provides some preliminary guidelines for panel spacing. Only an analysis of all the relevant parameters by a skilled designer can determine the actual panel spacing required along any given conveyor.

Nominal Pipe Diameter		@25 lbf/ft³ (400 kgf/m³)		@50 lbf/ft³ (800 kgf/m³)		@75 lbf/ft³ (1200 kgf/m³)		@100 lbf/ft³ (1600 kgf/m³)		@125 lbf/ft³ (2000 kgf/m³)	
(in)	(mm)	(ft)	(m)	(ft)	(m)	(ft)	(m)	(ft)	(m)	(ft)	(m)
6	150	4.75	1.45	4.50	1.37	4.25	1.30	4.00	1.22	3.75	1.14
8	200	5.25	1.60	5.00	1.52	4.75	1.45	4.50	1.37	4.25	1.30
10	250	5.50	1.68	5.50	1.68	5.25	1.60	5.00	1.52	4.50	1.37
12	300	6.00	1.83	5.75	1.75	5.50	1.68	5.25	1.60	5.00	1.52
14	350	6.25	1.91	6.00	1.83	5.75	1.75	5.50	1.68	5.25	1.60
16	400	6.75	2.06	6.50	1.98	6.25	1.91	6.00	1.83	5.75	1.75
18	450	7.00	2.13	6.75	2.06	6.50	1.98	6.25	1.91	6.00	1.83
20	500	7.25	2.21	7.00	2.13	6.75	2.06	6.50	1.98	6.25	1.91
22	550	7.50	2.29	7.25	2.21	7.00	2.13	6.75	2.06	6.50	1.98
24	600	7.75	2.36	7.50	2.29	7.25	2.21	7.00	2.13	6.75	2.06
26	650	8.00	2.44	7.75	2.36	7.50	2.29	7.25	2.21	7.00	2.13
28	700	8.25	2.51	8.00	2.44	7.75	2.36	7.50	2.29	7.25	2.21
30	750	8.50	2.59	8.00	2.44	7.75	2.36	7.50	2.29	7.25	2.21
32	800	8.50	2.59	8.25	2.51	8.00	2.44	7.75	2.36	7.50	2.29
34	850	8.75	2.67	8.50	2.59	8.25	2.51	8.00	2.44	7.75	2.36

Table 10.43
A guide to panel spacing for pipe/tube conveyors

WWW.CEMANET.ORG is issued to accurate on 2024-01-04 2017 Wiriyaraksa Group Co.,Ltd. Suanluang, , Thailand

Belt Alignment in Pipe/Tube Conveyors

Conventional conveyors have the operational problem of misalignment of the belt laterally. This often causes severe damage to the belt edge as it contacts nearby steel work. pipe/tube conveyors do not have this problem, as the belt is constrained 360° in the vertical plane by the hexagonal arrangement of rolls at each panel. Belt misalignment with pipe/tube conveyors is of a completely torsional nature as shown

in Figure 10.44 where it is clearly seen that the carrying belt has twisted (misaligned) so the overlap is between the 3 to 4 o'clock position. The belt wants to twist, particularly the carrying side when running empty. A twist of the overlap in the carrying run from its normal 12 o'clock position or in the return run from its 6 o'clock position is termed as belt misalignment. A misalignment of +/- 20° is generally considered acceptable. The carrying run, when loaded with material wants to run well aligned since the center of gravity of the belt and material load is well below the center line of the pipe/tube. This makes the belt stable and it will want to run true. The carrying run, running unloaded is probably the most problematic situation. The center of gravity is now above the center line of the belt due to the overlap at the top. This situation is inherently unstable and the belt wants to twist. Twisting by itself is not a problem when the belt is empty since there is no material to leak out. It is just at the head that problems arise. The overlap has to be maintained at the 12 o'clock position for the belt to unfold onto the head pulley properly. This is where all the training efforts should be concentrated, getting the belt overlap to stay at 12 o'clock when empty. The return run does not usually pose a training problem as the center of gravity, due to the belt overlap being at the 6 o'clock position, is below the belt's center line.

With conventional idlers there are self-training idlers available to help keep the belt automatically trained. This option is not available to pipe/tube conveyors. They must use:

- A very accurate alignment of the idler panels, so the rolls are absolutely perpendicular to the axis of the pipe/tube.
- Shims under the roll support brackets to skew the rolls
- Lower rolls, contained in slotted frames, so they can be easily skewed (Ref. Figure 10.45).

Self-trainers for pipe/tube conveyors are available but are very complex devices. They are usually electrically powered and custom designed. They basically consist of sensors that look at the position of the belt overlap and actuators that can move a lower roll to skew it to counteract any misalignment. Typically it is a lower center roll due to its being the most heavily loaded and skewing it will have the most effect. Rubber covering the roll also increases its effectiveness.

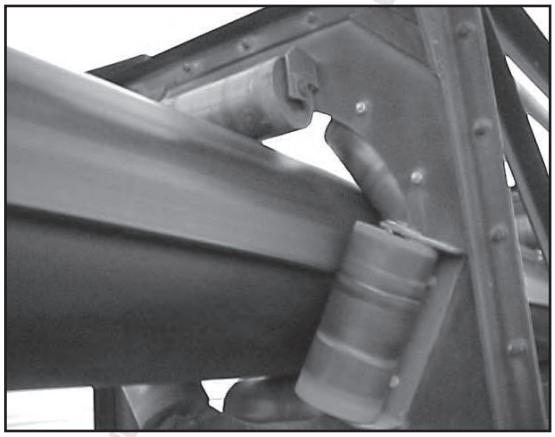

Figure 10.44
Misaligned pipe/tube conveyor belt seam

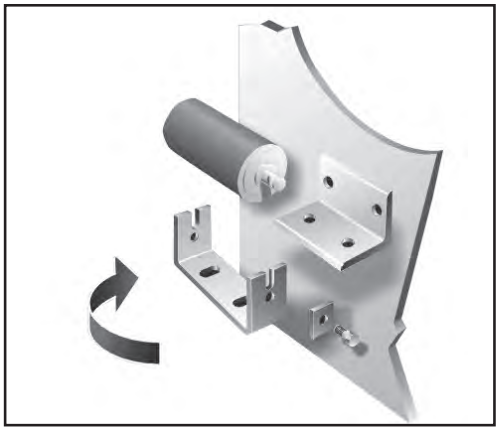

Figure 10.45
Manual training idler

Belt training is the same as with a conventional conveyor. The belt will attempt to go to the side of the roll it touches first. For example, looking in the direction of belt travel, bringing the right side of a roll on the near side of the panel towards you, by shimming under the right end roll support bracket, will result in a counter-clockwise torque being applied to the belt and the overlap will move counter clockwise. Alternately the left side support brackets, on a far side roll (looking through the panel), can be shimmed to produce the same effect. Shimming the left side roll support bracket on the near side or the right (looking

through the panel) roll support bracket on the far side will impart a clockwise torque on the belt. The bottom center and its two adjacent bottom side rolls are the main rolls used to train the belt, as they are the most heavily loaded rolls. Adjusting these rolls will have the most effect.

Power Requirements for Pipe/Tube Conveyors

There are no standards for the calculation of the tension and power requirements for pipe/tube conveyors. Designers use their past experience, literature searches on the subject and in particular published research, to modify the equations used to design conventional conveyors. Essentially, the CEMA Historical Method (Appendix C) for tension/power requirements can be used with only modifications to K_x and K_y required. These components of the tension/power requirements need modifying for the following reasons:

- The roll turning resistance, K_x, is a much more significant factor with pipe/tube conveyors, as there are six rollers per panel supporting the carrying side and as many as six rollers per panel supporting the return side.
- The indentation resistance component of the rolling resistance, K_y, is increased with pipe/tube conveyors, as it is not only dependent on the belt and material weight but also the lateral flexibility of the belt. These 'pipe shape keeping forces' as they are known, act on all six rolls increasing the total indentation resistance seen at an idler panel.
- The radial forces due to tight horizontal and/or vertical curves must be taken into account as they significantly increased indentation resistance. Normally these forces would be ignored in conventional conveyors due to the relatively large radii involved.
- The belt and material flexure resistance components of the rolling resistance, K_y, is more significant with pipe/tube conveyors. The belt and material takes on a modified shape between idler panels due to sag, and must be forced into a well defined shape at the idler panel.
- Of note is the friction in the overlap zone. Belt sag causes the overlap sections to move relative to each other between idler panels in a slight opening fashion and power must be used to force them back into position at each idler panel.
- Choice of belt construction has a much more significant effect on the rolling resistance, K_y, than is apparent with conventional conveyors.

Advantages of Pipe/Tube Conveyors

- Very environmentally friendly
- Tight curves, tighter than conventional conveyors can be negotiated.
- Incline angles to 30° and horizontal turns of 100° are possible.
- Readily available, although somewhat specialized, conveyor belting is used.
- Somewhat standard conveyor components are used.
- Belts can be easily cleaned using standard belt cleaners.
- Long overland conveyors are possible.
- In most cases conveyor covers are not required.
- No belt edge damage from conveyor misalignment.
- Smaller space requirements

Disadvantages of Pipe/Tube Conveyors

- More idler rolls required per conveyor
- Noisier than a standard conveyor due to the increased number of idler rolls
- Higher power requirements
- Smaller capacity for the belt width than with conventional conveyors

WWW.CEMANET.ORG Issued to document 14480 on 12-12-2017 © Copyrighted Material (Thailand)

Recommend that you consult with the individual CEMA Member Manufacturers and or Designers of pipe/tube belt conveyors for more information and specific inquiries.

Fold Belts

Basic Construction of Fold Belt Conveyors

This is a family of conveyors that utilize a proprietary belt that has integral flaps where the belt edges fold over the material overlapping each other in the middle and sealing the material within. The belts incorporate a longitudinal hinge on both sides of center of the belt, approximately 1/4 of the belt width in from each edge. This allows the belt to fold over the material to totally enclose the load. The belt is fully open at the drive, head, take-up, tail and any bend pulleys. The belt is typically in the folded position for the return run in order to minimize material spillage and return idler build-up generated by any carryback. One model of this family of conveyors is discussed below.

Figure 10.47 shows a typical three roll garland troughing idler with the two roll garland hold down idler on top of the belt cover flaps. Figure 10.46 is a cross-section of a fold belt that helps illustrate this type of system further. Note the garland hold down idlers are spring loaded to conform to the volume of material in the trough. For steep angle conveying, the slightly modified arrangement, shown in Figure 10.46, with a spring loaded center roll (load compensating idler) is used to reduce the cross-sectional area to prevent material slide-back, when the belt is filled to less than the maximum carrying capacity.

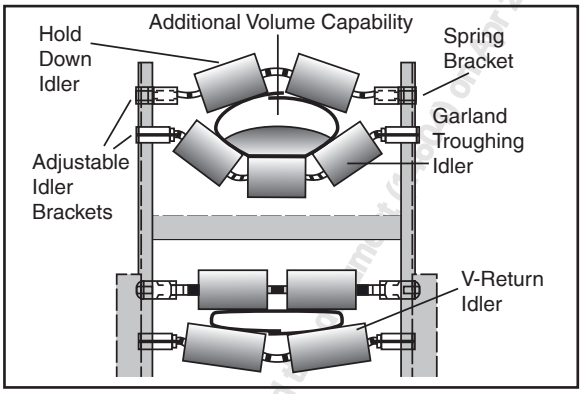

Figure 10. 46
Typical fold belt system cross-section



Figure 10.47
Typical fold belt arrangement for steep angle conveying

Capacities of Fold Belt Conveyors

The CEMA load capacity cross-sections do not apply to fold belts. There is no need to maintain the standard CEMA edge distance. The belt can be fully loaded as long as there is still the prerequisite overlap. See Figure 10.49. This means much higher capacities can be handled, typically 65 to 85% more, for the effective belt width (i.e. folded), than conventional conveyors. See Table 10.50. However, fold belts only have a capacity of about 40% of a conventional conveyor of the same unfolded belt width. Both methods of comparison are somewhat unfair to the other type of system. A true design comparison must weigh all the relevant factors.

Additionally, if steep angle conveying is not required, the belt can be loaded and convey material with the belt cover flaps in a "U" orientation from the load point until discharge. This allows the belt to carry a substantially greater load on a narrower structure without fear of material spillage or the need for belt

skirting. The following inch belt widths are available: 15, 18, 21, 24, 27, 30 and 36 inches (381, 457, 533, 610, 686, 762 and 914 mm). The belt width is defined by the dimension between the hinging areas. The actual, flat belt width is two times this width. Capacities and lump size limitations are shown in Table 10.50. The minimum capacity is based on the minimum cross-sectional area to eliminate material sliding on steep inclines and declines. The maximum capacity is based on the maximum cross-sectional area of material that will still allow an adequate overlap of the cover flaps.

Surcharge Angle (deg)	Folded Belt Width in (mm)						
	15 (381)	18 (457)	21 (533)	24 (610)	27 (686)	30 (762)	36 (914)
0°	0.536 (0.050)	0.796 (0,074)	1.106 (0.103)	1.467 (0.136)	1.879 (0.175)	2.342 (0.218)	3.421 (0.318)
5°	0.581 (0.054)	0.861 (0.080)	1.196 (0.111)	1.586 (0.147)	2.030 (0.189)	2.530 (0.235)	3.693 (0.343)
10°	0.625 (0.058)	0.926 (0.086)	1.286 (0.119)	1.705 (0.158)	2.182 (0.203)	2.719 (0.253)	3.968 (0.369)
15°	0.671 (0.062)	0.993 (0.092)	1.378 (0.128)	1.826 (0.170)	2.336 (0.217)	2.910 (0.270)	4.246 (0.394)
20°	0.717 (0.067)	1.060 (0.098)	1.471 (0.137)	1.948 (0.181)	2.493 (0.232)	3.104 (0.288)	4.529 (0.421)
25°	0.764 (0.071)	1.129 (0.105)	1.566 (0.145)	2.074 (0.193)	2.654 (0.247)	3.304 (0.307)	4.818 (0.448)
30°	0.812 (0.075)	1.201 (0.112)	1.665 (0.155)	2.204 (0.205)	2.819 (0.262)	3.510 (0.326)	5.118 (0.475)
Capacity ft^3/h @ 100 fpm (m^3/h @ 0.5 m/s)							
0°	3,219 (89.6)	4,775 (133.1)	6,637 (184.9)	8,804 (245.3)	11,276 (314.2)	14,054 (391.6)	20,525 (572.1)
5°	3,485 (97.2)	5,166 (144.0)	7,176 (200.0)	9,515 (265.2)	12,183 (339.5)	15,180 (423.1)	22,161 (617.5)
10°	3,752 (104.5)	5,558 (154.8)	7,717 (215.0)	10,229 (285.1)	13,094 (364.9)	16,312 (454.7)	23,807 (663.5)
15°	4,023 (112.2)	5,956 (166.0)	8,266 (230.4)	10, 953 (305.3)	14,017 (390.6)	17,459 (486.6)	25,474 (710.0)
20°	4,299 (119.9)	6,361 (177.3)	8,825 (246.0)	11,690 (325.7)	14, 958 (416.9)	18,627 (519.1)	27,171 (757.3)
25°	4,582 (127.8)	6,776 (188.8)	9,397 (261.9)	12,446 (346.8)	15, 921 (443.8)	19,824 (552.5)	28,911 (805.7)
30°	4,874 (135.8)	7,204 (200.8)	9,988 (278.4)	13,225 (368.6)	16, 915 (471.4)	21,059 (586.9)	30,705 (855.8)

Table 10.48
Fold belt U configuration capacities

The proprietary belt is available in operating strengths to 600 PIW (105 N/mm) based on the unfolded flat width. They are available with a variety of cover compounds and are normally used with vulcanized splices; however mechanical splices may also be used. Belt speeds are comparable to conventional conveyors. Enclosing the material allows higher belt speeds when material blow-off is the limiting factor.

WWW.CEMANET.ORG has issued this document (145.00.01) on 4, 2017 10:10pm Standard, Standard, , Author

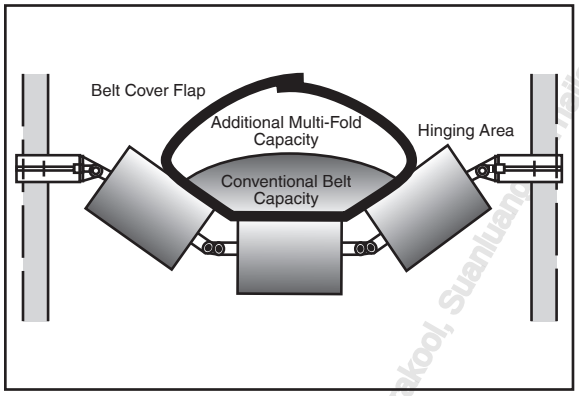

Figure 10.49
Relative fold belt capacity

Folded Belt Width in (mm)	Cross Sectional Area ft^2 (m^2)		Capacity ft^3/h @ 100 fpm (m^3/h @ 0.5 m/s)		Capacity (tph) @ 100 fpm @ 100 lbf/ft^3 (mtph @ 0.5 m/s @ 1600 kgf/m^3)		Maximum Lump Size in (mm)	
	Minimum	Maximum	Minimum	Maximum	Minimum	Maximum	Uniform Lumps	80% Fines
15 (381)	0.222 (0.021)	0.304 (0.028)	1,332 (8.0)	1,823 (10.9)	66.6 (59.1)	91.1 (80.8)	1.25 (32)	3.0 (76)
18 (457)	0.328 (0.031)	0.451 (0.042)	1,968 (11.8)	2,705 (16.2)	98.4 (87.3)	135.2 (119.9)	1.50 (38)	3.50 (89)
21 (533)	0.419 (0.039)	0.624 (0.058)	2,514 (15.0)	3,742 (22.4)	125.7 (111.5)	187.1 (165.9)	1.75 (44)	4.50 (114)
24 (610)	0.562 (0.052)	0.828 (0.077)	3,372 (20.2)	4,968 (29.7)	168.6 (149.5)	248.5 (220.3)	2.25 (57)	5.50 (140)
27 (686)	0.732 (0.068)	1.049 (0.098)	4,395 (26.3)	6,294 (37.6)	219.6 (194.7)	314.7 (279.0)	3.0 (76)	6.50 (165)
30 (762)	0.856 (0.080)	1.308 (0.122)	5,136 (30.7)	7,849 (46.9)	256.8 (227.7)	392.4 (347.9)	4.0 (102)	7.50 (191)
36 (914)	1.205 (0.112)	1.898 (0.176)	7,229 (43.2)	11,391 (68.1)	361.4 (320.5)	569.5 (505.0)	4.50 (114)	11.50 (292)

Table 10.50
Typical fold belt capacities and lump size limitations

WWW.CEMANET.ORG Files issued to Mr. Amnat (1465) on Apr 24 2017 to Pattarapom Sritrakool, Suanluang, Thailand

Folded Belt Width in (mm)	Conventional Trough Capacity* lbf/ft³ (kgf/m³)	Minimum fold belt Capacity** lbf/ft³ (kgf/m³)	Minimum % Increase	Maximum fold belt Capacity** lbf/ft³ (kgf/m³)	Maximum % Increase	Typical fold belt Capacity** lbf/ft³ (kgf/m³)	Typical % Increase
18 (457)	1,381 (85.9)	1,968 (122.4)	43	2,705 (168.2)	96	2,558 (159.1)	85
24 (610)	2,640 (164.2)	3,372 (209.7)	28	4,968 (309.0)	88	4,649 (289.1)	76
30 (762)	4,300 (267.4)	5,136 (319.4)	19	7,849 (488.1)	83	7,306 (454.4)	70
36 (914)	6,364 (395.8)	7,229 (449.6)	14	11,391 (708.4)	79	10,559 (656.7)	66
*Standard CEMA three equal roll 35° troughing idler, standard edge distance. 25 degree surcharge angle **Capacities in ft³/h @ 100 fpm (m³/h @ 0.5 m/s)							

Table 10.51
Comparison of fold belt vs. standard troughed belt capacities

Spring-tensioned hold down rolls press on the belt cover flaps and therefore on the material. The angle of incline attainable is greater than that which can be obtained with a conventional belt conveyor. It is similar to sandwich belts, where an increased normal load on the top belt allows increased angles of incline. Angles of incline or decline to 45° are possible with fold belts. However, it is necessary to maintain standard incline/decline angles through the tail, discharge, and load transition areas because the flaps no longer enclose the material to prevent slide-back. Consequently, a fold belt, used for steep angle conveying will require curve radii at both the tail and the head ends to transition from and to these lower incline angles.

Another benefit of fold belts is they can negotiate smaller radii concave curves than conventional conveyors. The hold down rolls prevent the belt from lifting off the idlers in tight concave curves. This is a benefit in tight spaces as well as in steep angle conveying where curve radii are a design necessity.

The head end discharge pulley is usually the drive pulley as with conventional conveyors, but other locations for the drive can be accommodated. It is necessary to drive fold belts in the unfolded, flat position. See Figure 10.52. The discharge and drive pulley must be wide enough to accommodate the unfolded belt. Pulleys with a face width of 2 times the folded belt width plus 2 to 3 inches (50 to 75 mm) must be used whenever the belt is in the unfolded condition. Since the belt goes around a pulley in its flat position, only a normal pulley diameter is required for the belt's construction. Experience shows it is best for the belt to go around all pulleys in the unfolded condition.

WWW.CEMANET.ORG Purchased by Pasarapom Sakrakorn (pasarapom@gmail.com) on 24-Jan-2019 Document #14604 Licensed for Single User. © 2019 Conveyor Equipment Manufacturers Association, Thailand

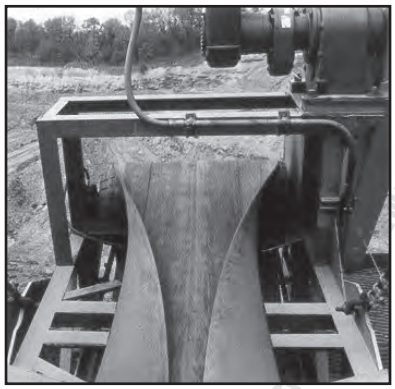

Figure 10.52
Typical fold belt discharge/drive

Transitions with Fold Belt Conveyors

Transition lengths are governed by the edge stresses developed in the belt. They vary depending on the ratio of the average belt tension in PIW at the transition zone, to the rated operating strength of the belt in PIW. They also vary depending on the degree of closure/opening that occurs in the transition. A fold belt can be thought of, like pipe conveyors, as having 180 degree troughing, so transition lengths are by necessity, very long. A transition length from flat to fully closed requires 10 to 12 times the folded belt width. A transition from flat to a U-trough configuration (90 degree flaps) will require approximately half the distance required to fully close the belt. Standard CEMA transitions apply for a transition from flat to a conventional troughed configuration by considering the belt width to be the fully opened (flat) width. Loading a fold belt can be accomplished with the belt flaps in a conventional troughed configuration as well as in the U-trough configuration as shown in Figures 10.53 and 10.54.

When a fold belt is fully closed to transport material, transitions from fully closed to a U-trough condition also occur at each additional load area. These transition lengths are generally 10 to 12 times the folded belt width. Alternately, the belt can be kept in the U-trough mode throughout the entire length of the belt, or from the first load area to the last.



Figure 10.53
Typical fold belt loading zone

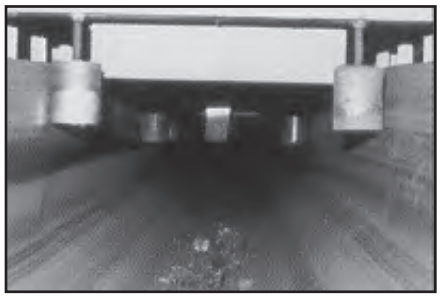

Figure 10.54
Typical fold belt loading zone longitudinal view

The transition distances near the non-driven end can be shorter than transitions near the driven head end because the tensions are typically lower. Figures 10.55 and 10.56 show schematic representations of the transitions occurring at pulleys and intermediate load areas, respectively.

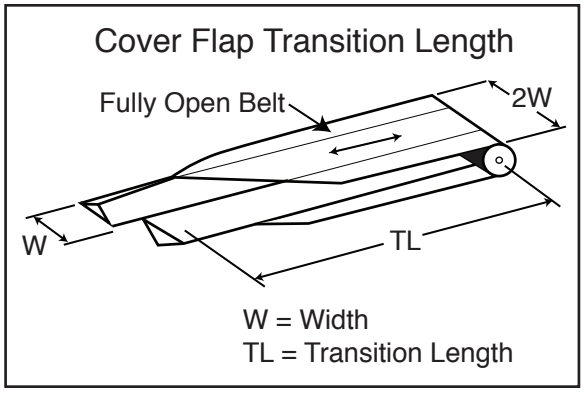

Figure 10.55
Typical fold belt pulley transition

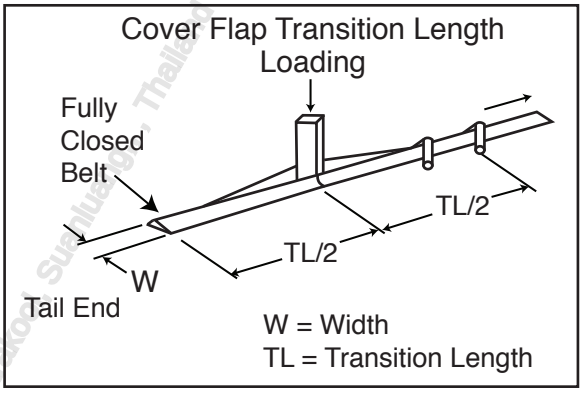

Figure 10.56
Typical fold belt intermediate load area transition

The power and tension calculations for a fold belt uses a slightly modified CEMA Historical Method approach. The roll turning and the rolling resistance (K_x & K_y) must be modified to cover the following affects: Where hold down rolls are present, their turning resistance needs to be factored into the value used for A_i in the equation for K_x. The additional normal forces, developed by the carrying and return side hold down rolls, increase the rolling resistance and need to be added appropriately to:

- The material and belt weight (W_m & W_b), within the K_x equation for the bearing resistance.
- The material and belt weight (W_m & W_b) that the factor K_y is multiplied by in the calculation of T_e.
- The belt weight (W_b) that the 0.015 value for the return K_y factor, is multiplied by in the calculation of T_e.

Fold belts can be used to great advantage for negotiating hilly terrain as shown in Figure 10.57. Fold belts can also be used to convey materials through environmentally sensitive areas as shown in Figure 10.58 due to their totally enclosed carrying and return runs.



Figure 10.57
Fold belt negotiating difficult terrain



Figure 10.58
Overland fold belt traversing environmentally sensitive area

Advantages of Fold Belt Conveyors

- Very environmentally friendly
- Tight vertical curves, tighter than conventional conveyors can be negotiated.
- Incline angles to 40° are possible.
- Except for the belt, standard conveyor components are used.

www.CEMA-Procurement (4604) on 11-Jul-2019 to Paterapom Sriprakob, Suanluang, Thailand

- Belts can be easily cleaned using standard belt cleaners.
- Overland conveyors are possible.
- Small space requirements for the capacity handled.

Disadvantages of Fold Belt Conveyors

- More idler rolls required per conveyor
- Higher power requirements

Recommend you consult with a CEMA Member company or designers of fold belt type conveyors for more information and specific inquiries.

Suspended Belt Conveyors

Basic Construction of Suspended Belt Conveyors

Suspended Belts are a family of belt conveyors where the belt is folded in half and suspended from rollers. The teardrop shaped pouch that is formed, fully encloses the material. The resulting small effective hydraulic radius, makes these types of belt conveyors very appropriate for conveying at angles of incline/decline that are greater than conventional conveyors, and typically in the 25°-35° range. Angles attainable are slightly steeper than pipe/tube conveyors as they have a slightly smaller effective hydraulic radius from their teardrop shaped pouch cross-section when full.

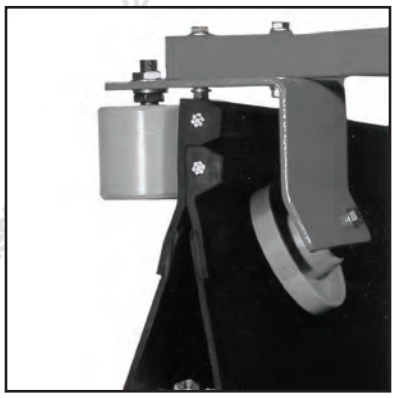

Figure 10.59
Cross-section of one model of suspended type belt conveyor

There are two models available from different manufacturers. Although they have slightly differing design philosophies, in a number of ways, they are quiet similar. Both models have profiles at the edges of the belt. These profiles are angled, as are the support rollers so that there are forces to both support the weight of the belt and material, and forces to keep the belt edges sealed together. In both designs, the weight of the belt and material helps keep the belt edges sealed. The model shown in Figure 10.59 uses in addition to the angled support roller, a vertical guide roller. The main belt has no fabric reinforcement. It is simply a flexible, wear resistant rubber across the full width. It does however have a single steel cable in each of the profiles that are vulcanized to the edges of the belt, to handle the belt tension. It thus separates the carrying and tensile/power functions into two distinct design elements. The profiles in addition have a fabric near their surface.

A suspended belt conveyor consists of a series of support and guide rollers as shown in Figure 10.60 to

hold the suspended pouch along the conveyor and keep the belt edges sealed. The rollers are typically spaced at 1.0 m (3.3 ft) on the carrying side and 2.0 m (6.5 ft) on the return side. The carrying and return runs can be arranged over top of each other as in Figure 10.60, side by side as shown in Figures 10.61 and 10.62, or the carrying and return strands can take entirely separate routes. In all cases the belts are suspended by their profiles. In all three cases, the suspended belt uses much less space than a conventional conveyor.



Figure 10.60
Vertical suspended belt arrangement

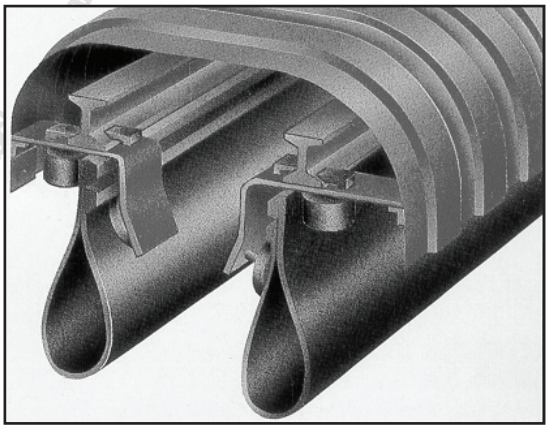

Figure 10.61
Horizontal suspended belt arrangement

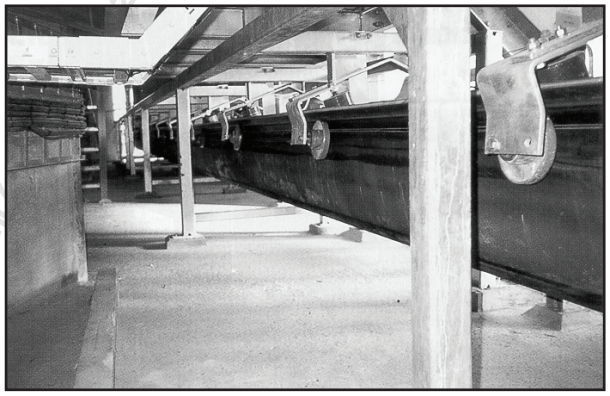

Figure 10.62
Horizontal suspended belt traversing restricted quarters

The belt usually travels around a deflection wheel or wheels at the tail, and at any bends, with the belt edge profiles kept locked together. The deflection wheels have a flat face when the profiles are to the outside of the bend. When the profiles are to the inside of the bend, the wheels must naturally have a mating profile in the face of the wheel. This can be seen in Figure 10.63 where the upper wheel bends the carrying belt 90° using a flat face wheel as the profiles are to the outside. The lower wheel has a profile to bend the return belt 90° as the profiles are now to the inside of the bend. Because the two steel cords are in the same vertical plane, very sharp corners are possible with changes in belt direction of up to 180° or more.

www.CEMAnet.org has issued this document to Pattarapom Sritrakool, [illegible], [illegible]

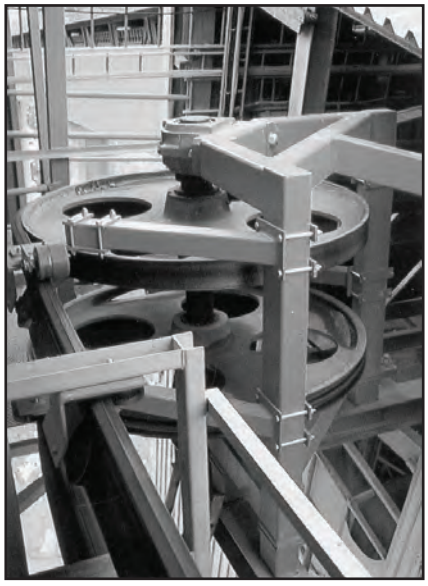

Figure 10. 63
Typical suspended belt deflection wheels

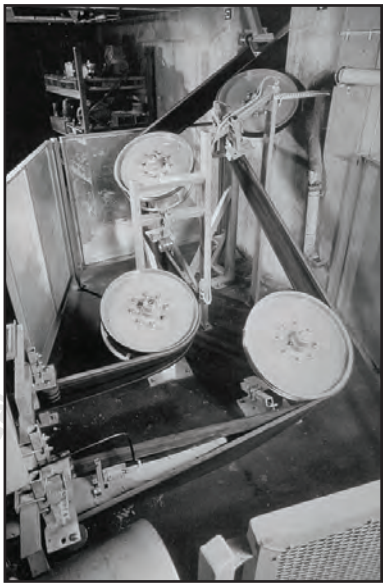

Figure 10.64
Tight suspended belt inclined “S” curve

With strategically placed deflection wheels along a suspended belt conveyor, the belt can be made to take almost any path. Figure 10.64 illustrates an inclined and very tight ‘S’ curve to abruptly change the conveyor’s direction immediately following a loading zone.

The belt is tensioned in a similar manner to conventional conveyors. A deflection wheel, usually the tail wheel with 180° belt wrap, is placed in a horizontal carriage and tensioned by gravity with an appropriately sized counterweight.

A drive may be located on any deflection wheel with at least 90°of belt wrap as shown in Figure 10.65. The wrap requirement is normally a minimum of 90° but can be as low as 70° in special situations. Note that drive wheels are not rubber lagged. The drive wheel can either be flat faced or profiled. Usually several identical drives are used along a conveyor to keep the belt tension within the operating range of the belt strength, which only has two steel cords to handle the belt tension. With today’s technology for controlling multiple motors, having several drives distributed along a suspended belt conveyor presents no great technical challenge.

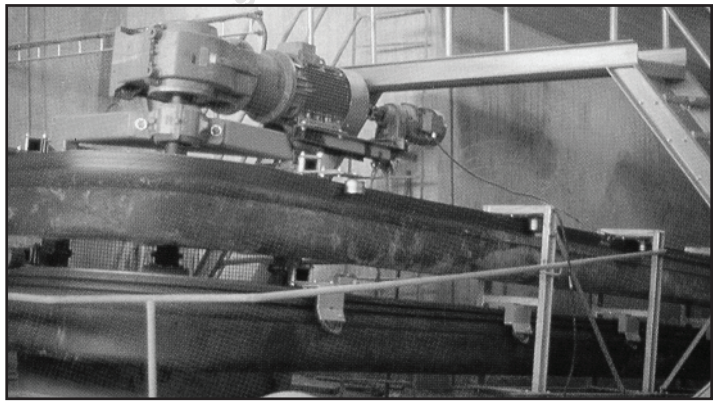

Figure 10.65
Typical suspended belt drive station 90° bend

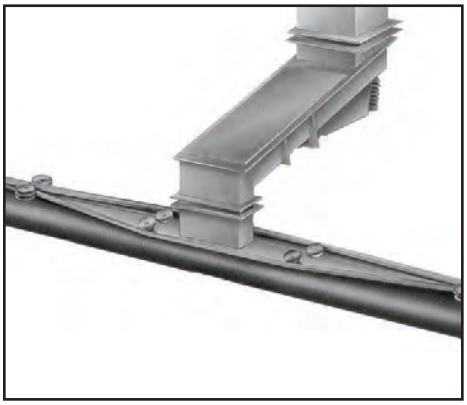

Figure 10.66
Typical suspended belt loading zone

To load the belt, either at the tail end or anywhere required along the carrying or return run, the belt is opened into a 'U' shape with sufficient room for a loading chute as shown in Figure 10.66. Deflection rollers are used to spread the top edges open. The belt is closed immediately after the loading chute. There needs to be a short transition zone before and after the loading point to accomplish this. The suspended belt lends itself very well to both multiple intermediate loading points down the conveyor and to two-way conveying. The pouch shape absorbs the impact energy of the falling material and accelerates it up to belt speed very well. Because oversize lumps or overfilling the belt can cause severe damage, an excessive lump/overfill sensor and interlock safety device is always installed. The feed to a suspended belt should be accurately controlled and a feeder is highly recommended.

Discharges are accomplished using two spaced deflection wheels. One has a flat face and one will be profiled. The belt is opened flat between these two wheels at the discharge. The preferred type of discharge is the tripper type discharge shown in Figure 10.67. This provides the option of either discharging the material to the side or back onto the conveyor. It therefore can be used for an intermediate discharge as well as a head end discharge. With this type of discharge, the belt is easily re-oriented for the return run, or for further conveyance of the bulk material. Another method used is a horizontal type as shown in Figure 10.68.



Figure 10.67
Suspended belt tripper discharge

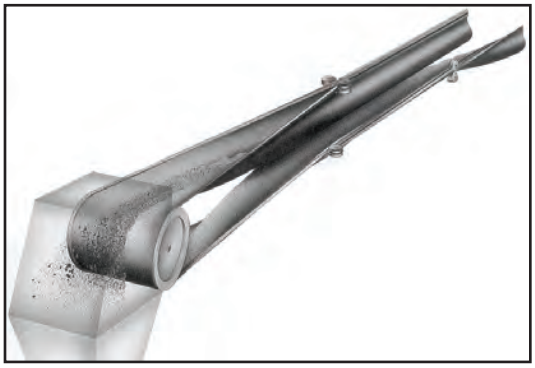

Figure 10.68
Suspended belt typical discharge

The belt requires a long, gradual transition to open from its totally enclosed pouch shape to flat as the troughing angle can be roughly considered as 90° and the belt edge steel cord. The belt edge is allowed to take approximately a 5° maximum fleet angle. Notice that after a discharge point, the return belt is always twisted so that the dirty side of the belt is on the inside and the two edge profiles are located at the top to support the belt again. This can probably be seen best in Figure 10.68 as the return run of belt must be twisted 180°.

Belt cleaners are generally not used with suspended belts unless the material being conveyed tends to build up and reduce the capacity. Centrifugal force and the belts flexibility make it almost self-cleaning. Any carry back is contained within the enclosed return run and no spillage or build-up on components results.

www.CEMAEBOOKS.org Issued to: Patrizia Pinto Stanwell, Stanwell, Trustee

Capacities of Suspended Belt Conveyors

Material fill is approximately 1/2 of the 'pouch's' cross-sectional area when loaded. Approximate capacities are shown in Table 10.69. A conventional conveyor can handle 300 to 600% more material for the width of the belt when unfolded flat. However, the suspended belt's other advantages, such as its environmental friendliness and/or its extreme flexibility in applications where a very convoluted conveyor path is required, should make this type of conveyor a strong candidate for consideration.

The maximum allowable lump size is approximately 1/3 of the "pouch's" cross-sectional area. By reducing the capacity being handled, the maximum lump size may be appropriately increased.

Suspended Belts - Typical Conveyor Data						
Profile Size	**100**			**1000**		
Belt Width mm (in)	**650 (25.6)**	**800 (31.5)**	**1000 (39.4)**	**1000 (39.4)**	**1200 (47.2)**	**1400 (55.1)**
Volumetric Capacity m^3/h @ 1 m/s (ft^3/h @100 fpm)	**25 (448)**	**40 (717)**	**70 (1255)**	**70 (1255)**	**100 (1793)**	**130 (2330)**
Maximum Material Load kgf/m (lbf/ft)	**70 (47)**			**200 (134)**		
Maximum Lump Size mm (in)	**20 (.8)**	**30 (1.2)**	**40 (1.6)**	**40 (1.6)**	**70 (2.8)**	**100 (3.90**
Typical Belt Speed m/s (fpm)	**1.5 to 3.5 (295 to 689)**					
Maximum Belt Speed m/s (fpm)	**5.0 (984)**			**5.0 (984)**		
Minimum Bend Wheel Radius m* (ft)	**0.4 (1.3)**			**1.0 (3.3)**		
Minimum Radius by Roller Curve m (ft)**	**40.0 (131)**			**60.0 (197)**		
Opening/Closing Transition Distance m* (ft)**	**3.75 (12.3)**	**4.5 (14.8)**	**5.75 (18.9)**	**5.75 (18.9)**	**6.75 (22.1)**	**8.0 (26.2)**

*Bend wheel diameter will be twice the radius
**Minimum vertical or horizontal curve when using rollers
***Typical transition from closed to flat - 1/2 these values at loading zone from closed to "U" shaped

Table 10.69
Approximate capacity of suspended belts

The belt can be produced in all the usual rubber grades such as oil resistant, heat resistant, food grade, etc. Because any hot material is totally enclosed, suspended belts with heat resistant rubber cannot convey material with as high a temperature material as conventional conveyors. Although this can be a disadvantage in some applications, the retention of process heat can be an advantage in others.

Suspended belts typically require as much power as a conventional conveyor. The power and belt tension however are calculated by a proprietary method by the conveyor supplier.

The suspended belt can be used in-plant as well as in overland applications. See examples in Figure 10.70 and 10.71.

www.CEMANET.ORG has licensed this document to [illegible] on Apr 24, 2017 to Padmanabh Shirodkar, Sadhana Trading



Figure 10.70
In-plant suspended belt application



Figure 10.71
Suspended belt overland application

Advantages of Suspended Belt Conveyors

- Extremely environmentally friendly, no escape of dust or objectionable odors.
- Excellent for handling difficult to handle bulk materials.
- Steeper incline angles than with conventional conveyors, up to 25°-35° are possible.
- Fewer idlers and the idlers are of a more economical design.
- No misalignment, the belt always wants to hang vertically.
- Very compact design, therefore very appropriate for cramped quarters
- Very small radii curves possible allowing almost instantaneous changes of conveying direction.
- Curve angles greater than 180° are possible
- Its flexibility allows for very convoluted conveying paths with one long continuous conveyor belt without the need for transfer points.
- The support structure is simpler and much more economical than conventional conveyors
- No belt cleaners are required and no associated problems with any carryback.
- Intermediate loading points, drives and discharges are very simple to incorporate.
- Two-way conveying is no problem.

Disadvantages of Suspended Belt Conveyors

- The belt is proprietary and available only from one supplier
- The belt is more expensive than conventional conveyor belting
- Lump size and capacity are very limited.
- Deflection wheels are of a larger diameter than the pulleys associated with conventional belt conveyors.
- Traveling trippers are not possible with suspended belts.

Sandwich Belt Conveyors

The sandwich belt principle hugs the material between two standard smooth-surfaced rubber belts. When designed according to well-developed rules, at the design conveying rate, the material cross-section occupies only the approximate middle half of the belt sandwich, allowing ample material free edge distance so that leakage will not occur even with normal misalignment of the two belts. A sandwich belt system applies material hugging pressure, via induced radial load or via external means, to the back of the cover belt, to secure the material as illustrated in Figures 10.72 and 10.73. This ensures it will not slide, roll back, or leak out of the sides even when conveying vertically. Various methods of supplying

the required hugging pressure are commercially available. These methods can be used alone or in combination to the best design advantage.

Sandwich belt conveyors are uniquely different than the "Totally Enclosed Belts" of the previous section. The sandwich cross-section is defined by the material load from complete belt to belt contact when there is no load, to increasing belt contact with the material load. They are true high angle conveyors that apply a hugging pressure to the material load regardless of the conveying rate. Additionally, a sandwiching cover belt can be located locally, anywhere along a belt conveyor where it is needed to assist in elevating the material, up a steep incline, or down a steep decline. These characteristics make sandwich belts unique.

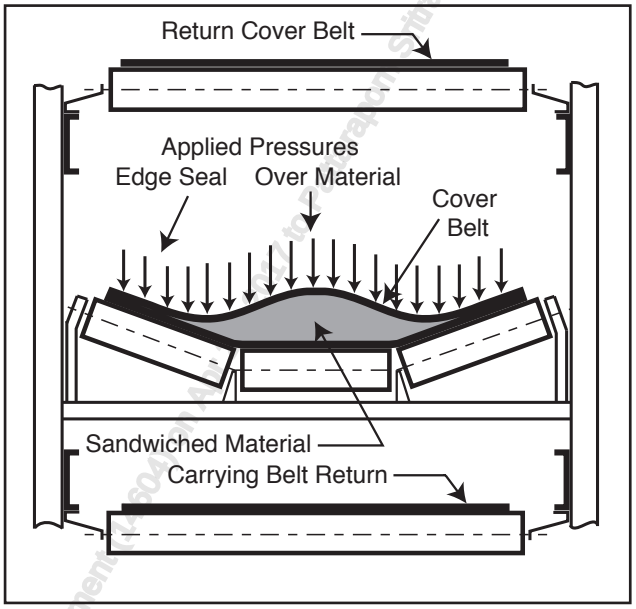

Figure 10.72
Typical sandwich belt cross section

Mechanics of Sandwich Belts

The general mechanics of sandwich belts are shown in Figure10.73. The applied or derived hugging pressure exploits the material's internal friction with an adequate safety margin to counteract the forces of gravity attempting to cause the material to slide back down between the belts.

WWW.CEMANET.ORG

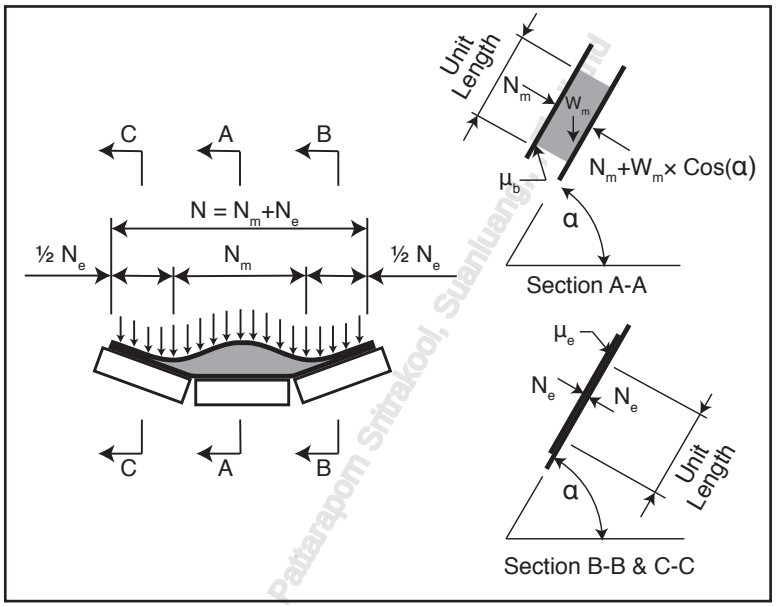

Figure 10.73
Sandwich belt mechanics nomenclature

$$N \geq SF \times \frac{W_m}{n_{db}} \times \left(\left(\frac{\sin(\alpha)}{\mu}\right) - \cos(\alpha)\right)$$

Equation 10.74
N, Sandwich belt normal load

Where:

N = Normal load from:
1. Cover belt weight
2. External pressure to cover belt
3. Cross -rigidity of the cover belt
4. Radial component of belt tension in cover belt
5. Any combination of the above

SF = Safety factor on material backsliding
W_m = Bulk material unit weight
n_{db} = Number of driven belts:
1. for carrying belt only driven
2. for both cover and carrying belt driven

α = Angle of sandwich belt inclination (deg)
μ = Coefficient of friction between material and belts (dimensionless)

Equation 10.74 is used to determine the total require normal hugging load, N, and does not say anything about that load's distribution onto the conveyed material. A similar equation is used to determine N_m (hugging load onto the material) but in that case only a portion of the total normal load N; N_m is applied onto the material, and the number of driven belts is generally two even if only one belt is

WWW.CEMANET.ORG has issued this document (14604) on Apr 24, 2017 to Pattarapom Sritrakool, Suanluang

driven. However, an edge drag calculation ($N_e \times \mu$) must determine that the edge friction is sufficient. The sandwich belt edge distance and edge pressure serves the very important function of preventing the material from escaping laterally from the edges of the two belts even when normal belt misalignment occurs.

Although simply laying a conveyor belt on top of the material is the simplest approach, it supplies only a limited amount of pressure that quickly diminishes as the angle of incline increases. Laying a cover belt on top of the material should theoretically suppress the dynamics of the materials movement and increase its conveyability up steeper inclines to its angle of repose and slightly beyond. However the top belt's transverse stiffness will prevent it from conforming completely to the materials surface negating its effectiveness. Material will tend to move down and laterally towards the belt edges and out of the sandwich. A reduced material cross-section and close attention to the pliability of the cover belt is required.

The transverse stiffness of the belt has also been used to an advantage. The required hugging pressure, according to equation 10.74, was imparted by the belt's transverse flexural resistance to being deflected apart by the material load. Figure 10.75 illustrates the principle of this system. Staggered edge rolls kept the belt edges together and the sandwich sealed while the belt's flexural resistance imparted the hugging pressure onto the material in order to develop the friction that resisted the material's back sliding forces due to gravity. There are two basic problems with this system. The belts must have the transverse stiffness to impart the required hugging pressure for the load. Because the material load increases as the square of the belt width so does the required transverse stiffness. This aspect made the concept impractical at belt widths much beyond 36 inches (914 mm). The more serious flaw was its failure to conform to any irregular load that included disparate material sizes. It is clear that a single larger lump in the middle creates a belt cross-section that tapers towards the edge rolls. This cross-section often exceeded the cross-sectional area of the material load thus the material would slide back from above to fill the void. The limited success of this system was with well graded materials.

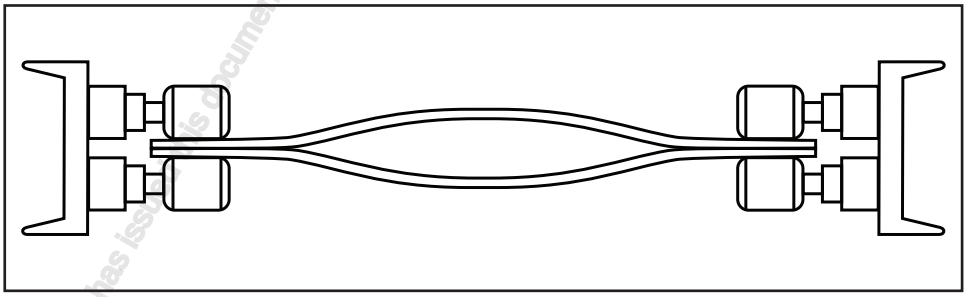

Figure 10.75
Sandwich belt using the belt's transverse rigidity

The tension in the belt itself can be used to secure the material. This method takes the sandwich through a continuous or multiple convex curve(s), so that the radial component of the cover (outer) belt tension supplies the required pressure to secure the material. The continuous convex curve is termed generally a 'C'-profile, two convex curves is an 'S'-profile and multiple convex curves, a multi-'S' profile. Figures 10.76 and 10.77, show a typical multi-'S' profile system. In order to accomplish the 'S' or multi-'S' profile, the design must switch back and forth from an inverted convex curve to a normal convex curve. The points where it switches are called points of inflection, and the belt must transition from being troughed in one direction to the other in a short distance. While transitioning, it must keep adequate normal pressure on the material to prevent it from backsliding and adequate sealing pressure to prevent the material from leaking out the sides.



Figure 10.76
Multi "S" sandwich belt

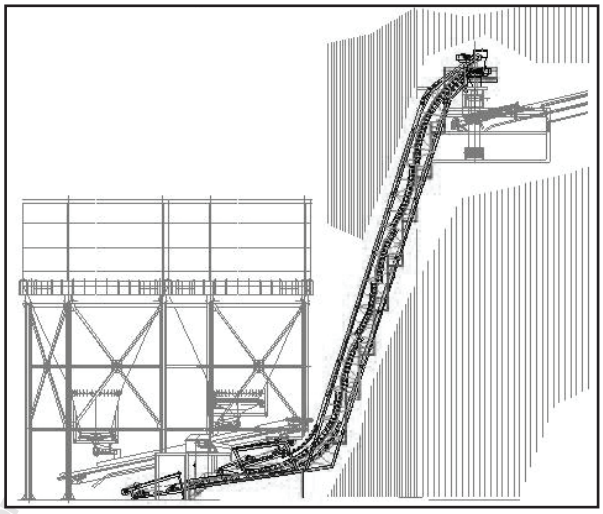

Figure 10.77
Illustration of multi "S" sandwich belt

The local radial component of the cover belt tension can be calculated by the following equation.

$$P_r = \frac{T}{R}$$

Equation 10.78
P_r, Radial load on sandwich belt curve

Where:

P_r = Radial load
R = Curve radius
T = Local belt tension

This load hugs and seals the material in the sandwich. However, great care must be taken in using this value, as the mechanics at each location of interest varies and therefore must be fully analyzed. The mechanics, shown in Figure 10.73 and its following equation, apply to an upright troughed system with cover belt at a specific angle. This applies equally at any point along an upright convex curve and even at any point along an inverted convex curve when the gravitational and radial loads due to tension are properly accounted for with their correct respective magnitude and direction.

Although this method supplies a very uniform pressure on the material, it suffers from the fact that at the top of very high lifts, the curve radius must be increased so that the radial pressure does not become excessive. The system must be designed so that, with a load near the top, there is enough radial load from the belt tension to adequately hug the material even though the remainder of the system is empty.

Pressure can be applied, on the back of the cover belt, mechanically with spring-loaded rollers across the width and along its length as shown on Figure 10.79. Although the pressures applied are somewhat discrete, even if the rolls are closely spaced, the transverse and longitudinal stiffness of the belt helps to distribute the pressure enough to adequately hug the material. This has been the most prolific type of sandwich belt system supplied to date.

www.CEMATERIAL.ORG a part of this document (14604) on Apr 24, 2017 © Patterapol

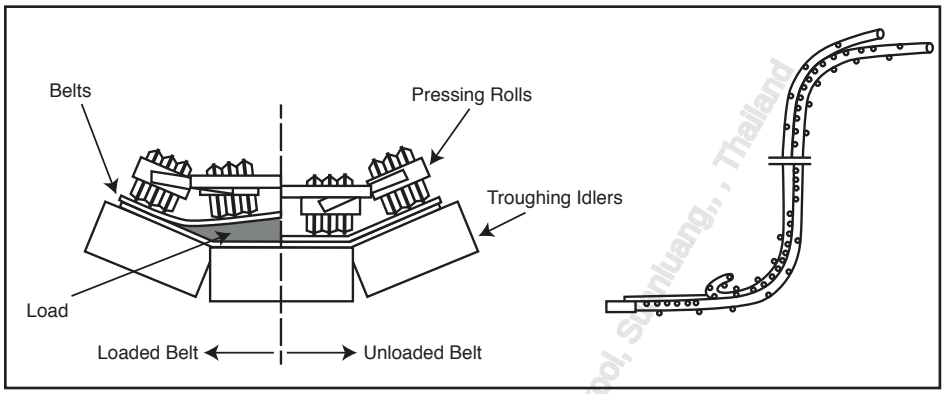

Figure 10.79
Illustration of a pressure roll type sandwich belt cross section

Almost all sandwich belt conveyors use convex curves to transition to a high incline from the lower horizontal run and from the high incline to discharge at high angle or to an upper horizontal run. When viewed in this light it can be safely said the radial pressure due to belt tension along alternating convex curves is the most common means of achieving sandwich belt high angle conveying. The convex curve is inverted when going from the horizontal to an incline and it is right side up when going from an incline up to discharge or to an upper horizontal run. This is not possible with belting reinforcement that has very high elastic modulus, such as steel cord or aramid reinforced belting. In such a case concave curves can be used to transition to an incline, but very large curve radii are required to prevent belt lift off of the two belts from the upright troughing idlers and of the upper belt from the lower belt. Additionally, when calculating the hugging pressure to prevent material slide back, the radial load due to belt tension in the cover belt will subtract from the other positive normal loads such as exerted by from the cover belt weight, or any applied pressure means onto the cover belt, such as pressing rolls.

For small radii convex curves, nylon warp carcass belts are preferred due to their low modulus of elasticity. The allowable radius can be reduced by using a combination of special low modulus nylon carcass belting, long center roll troughing idlers, usually at 20°, and 3 equal roll troughing idlers at low troughing angles such as 10° or even lower. This comes at a cost, reduction in the design material cross-section.

Design of Sandwich Belt Conveyors

More attention must be paid to the design of these convex curves than with normal conveyors, as they run closer to the design limits for a longer amount of time. The equations from Chapter 9 on curves should be supplanted by the equations and limitations that follow. In certain design circumstances, the limitations on belt edge and center tension used in the Chapter 9 calculations must be eased to reduce the curve radius. There is not 100% agreement among the experts on the extent of easing the radius of curvature constraints.

$$T_{edge} = T_{ave} + \frac{\left(BW^2 - L^2\right) \times \sin(\beta) \times B_m \times p}{48 \times BW \times R} \quad \text{(lbf/in)}$$

$$T_{edge} = T_{ave} + \frac{\left(BW^2 - L^2\right) \times \sin(\beta) \times B_m \times p}{4000 \times BW \times R} \quad \text{(N/mm)}$$

Equation 10.80
T_{edge}, Sandwich belt edge tension

WWW.CEMANET.COM (1400) 6 Apr 2021 10:27:27 From Suttakool, Supluang, , Thailand

$$T_{center} = T_{ave} - \frac{(BW - L)^2 \times \sin(\beta) \times B_m \times p}{48 \times BW \times R} \text{ (lbf/in)}$$

$$T_{center} = T_{ave} - \frac{(BW - L)^2 \times \sin(\beta) \times B_m \times p}{4000 \times BW \times R} \text{ (N/mm)}$$

Equation 10.81
T_{center}, Sandwich belt center tension

Where:

T_{center}	= Belt center tension [lbf/in (N/mm)]
T_{edge}	= Belt edge tension [lbf/in (N/mm)]
T_{ave}	= Average belt tension at location of interest [lbf/in (N/mm)]
B_m	= Elastic modulus of the belt per ply [lbf/in-p (N/mm-p)]
BW	= Belt width [in (mm)]
L	= Effective length of idler center roll [in (mm)] See Figure 4.13
β	= Troughing angle (deg)
p	= Number of plies (dimensionless)
R	= Radius of curve [in (mm)]

The radius of curvature constraints, of chapter 9, limit the maxim belt tension locally to the belt's tension rating and the minimum tension to 30 PIW (5.3 N/mm). The minimum tension constraint is regardless of the belt's strength; thus for a belt of only 200 PIW (35 N/mm) rating the minimum required is 15% of that rating while for a 3000 PIW (525 N/mm)rating that minimum is only 1% of the rating. Belt manufacturers have not all agreed with the chapter 9 criteria and some have published their own for use by their customers. One such major manufacturer limits the maximum belt tension locally to 115% of the belt's tension rating while limiting the minimum tension to 5% of the tension rating. The 15% increase above rated, at the high side, is to reflect that the tension is local, at the extreme fibers of the belt and not across the entire belt width. The minimum 5% of tension rating is to avoid belt damage due to belt relaxation and to ensure that radial pressure is not completely lost along the convex curves. The first line of Table 10.82 reflects the adaptation of this criteria as the most logical for sandwich belt high angle conveyors. The second line reflects a further relaxation of the criteria in order to achieve a yet tighter transition curve from the horizontal approach of the bottom belt to the high conveying angle.

Sandwich Belt Curve Radius	Minimum Center Tension, T_{center}	Maximum Edge Tension, T_{edge}
Normal curve radius	**$0.05 \times T_{rated}$**	**$1.15 \times T_{rated}$**
Difficult Design - reduced curve radius	**0.0**	**$1.20 \times T_{rated}$**

Table 10.82
T_{center} & T_{egde}, Minimum and maximum curve tension limits for sandwich belts

WWW.CEMANET.ORG has issued this document to [illegible] on NOV 24, 2017 for Thaiexports Standard Suanluang, , THAILAND

In certain instances, with C-profile design sandwich belts, the cover belt, also known as the outer belt, the edge limit may be increased to 130% of the belt's rating if it is not run empty for long periods of time. The cover (outer) belt does not see the calculated tension at its edges when the sandwich is filled with material. The edge tension is much lower than the calculated value due to the shape the belt takes to conform to the material cross-section.

Where the cover belt joins the carrying belt is known as the 'mouth' of the sandwich. See Figure 10.83. Special design considerations must be used here to make certain that the carrying belt, which becomes the cover (outer) belt in the curve, does not sag away from the curve, until the radial component of the cover belt tension can take effect. This can happen in the zone between the last upright idler and the first few inverted idlers in the curve.



Figure 10.83
Mouth of a sandwich belt

Belt tensions and system power can be calculated according to the expanded conveyor technology which supplants the gravitational loads of the conventional conveyor equations with the additional radial and applied hugging loads. The equations may be according to a modified CEMA Historical method or according to the latest CEMA power and tension calculations, depending on the sandwich belt high angle conveyor expert company.

Capacities of Sandwich Belt Conveyors

Capacities are calculated on a reduced CEMA cross-sectional area. The reduced area is required to ensure that the material is well centered and there is ample belt edge distance so that the material remains sealed within the belt sandwich even with the relative misalignment of the two belts when running. The correct material filling areas were first determined by layout then refined and confirmed by testing and experience. The sandwich belt design material area has been found related to the belt width, troughing angle, conveying angle and the material. Accordingly there is a basic design cross-sectional material area, a material factor and a de-rating with increasing angle. Based on 20 degrees troughing angle, equal roll idlers the basic area can be found in the CEMA capacity formulas in Chapter 4 when the surcharge angle is set to 0 degrees. That basic area corresponds to a 60 degrees incline angle. The design area must be de-rated 1.33% for each degree of increase in incline up to 90 degrees (vertical). Similarly the design area may be upgraded 1.0% for each degree of decrease in incline down to 45 degrees. Additionally the design cross-sectional area must be multiplied by a material factor according to that material's performance when conveyed in a sandwich belt high angle conveyor. The material factors vary with lower values of 0.85

to 0.90 applied to materials having lower angle of repose, such as iron ore pellets, soybeans, frac sand etc. and higher values of 1.10 to 1.15 applied to materials having higher angle of repose such as coarse crushed coal, crushed rock, wood chips etc. Though angle of repose is a typical indicator of the material factor it is not completely reliable and the actual value must come from testing. For sandwich belt high angle conveyors using much lower troughing angles, or with long center roll idlers, layouts and experience must determine the correct design cross-sectional filling areas.

Sandwich belts are run at normal belt conveyor speeds or higher. In some cases, such as C-profiled sandwich belts for self-unloading ships, higher belts speeds are used in attempt to compensate for the reduced material cross-sectional filling area. Though this has been successful in such cases, in general it is bad practice. Sandwich belt high angle conveyors utilize the same equipment and components as do conventional conveyors. They perform similarly at the same belt speeds. Therefore, sandwich belt high angle conveyors at the same site subject to the same operating conditions should be run at the same belt speeds. Generally the faster running belts will always suffer increased wear and tear compared to the slower belts and this is regardless of whether they are conventional or sandwich belt high angle conveyors.

Bulk material lump size in a sandwich belt conveyor is generally limited to the trough depth when the material is predominantly lumpy. Lump size can be increased an additional 25% when lumps are less than 10% of the material load. As with any belt conveyor the design must be suitable for the material handled. When handling coarse material it is appropriate to choose thicker belt covers of high grade rubber. It may be appropriate to slow down the belt speed and to use rubber disc center rolls that soften the ride of the large lumps along the carrying path. With these rules it is clear that very wide belts can handle large throughput rates of large size material such as primary crushed ore and waste rock. Sandwich belt high angle conveyor systems have proven successful in handling crushed rock of up to 12 inches (300 mm) with belt width of only 84 inches (2100 mm).

Configurations of Sandwich Belt Conveyors

Figure 10.84 illustrates the basic profiles that are at the core of the sandwich belt systems. These profiles can be combined with the various loading and discharge options in order to adapt to the required conveying path without transfers. The possible configurations are endless by combining the basic profiles with the following loading and discharge options:

- After loading, short horizontal (or low angle) approach to the mouth of the sandwich
- After loading, long Horizontal (or low angle) approach to the mouth of the sandwich
- Multiple loading points along an extended approach to the mouth of the sandwich
- High angle discharge along the final curve of the profile
- Low angle discharge with a short discharge run
- Low angle discharge with a long discharge run
- Low angle discharge at intermediate points of an extended discharge run: by tripping the belt or by plowing from the belt.

Figure 10.85 illustrates a L-profile application that unloads a truck. The C-profile has found widespread use especially on board self-unloading ships. The severe space restrictions on board make the C-profile sandwich belt ideal for elevating the cargo. The cargo is usually discharged from the ship's holds, by gravity, onto a tunnel belt conveyor that transfers it to the sandwich belt which in turn elevates the cargo to above the ship's deck onto a luffing/slewing boom conveyor that discharges the cargo to shore. The tunnel transfer point is often eliminated by extending the approach of the C-profile sandwich conveyor for the full length of the ship, to serve as the collecting tunnel conveyor. Figure 10.86 illustrates that configuration.

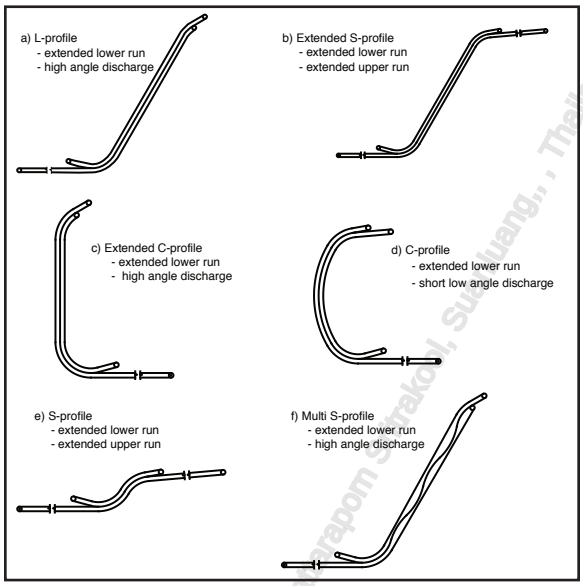

Figure 10. 84
Available sandwich belt profiles



Figure 10.85
L-profile truck unloading

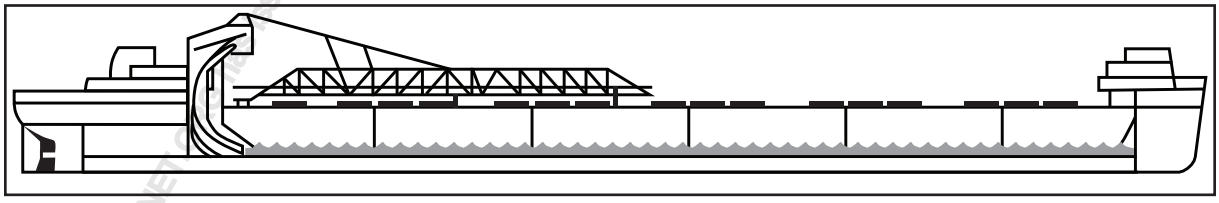

Figure 10.86
C-profile sandwich belt on a self unloading ship

www.CEMANET.com Issued this document to Mr. Pattarapom Sirakol, Suchuang, , , Thailand



Figure 10.87
L-profile sandwich belt filling a silo

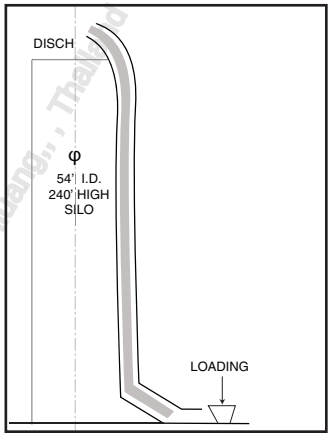

Figure 10.88
L-profile sandwich belt Illustration

Applications for Sandwich Belt Conveyors

Due to the high lift capability of sandwich belts, they must often use ladders and platforms for maintenance and operator access, along the steep incline. A novel way that has been used to provide easier access is shown in Figure 10.89. A mobile maintenance platform was installed along both sides of the Multi-'S' sandwich belt. This provided a real benefit to maintenance and operating personnel in performing their duties.

Sandwich belts have proven very versatile in elevating material up steep inclines or down deep declines even to vertical. They can range from light duty units handling just up to 100 tph (91 mtph) vertically, as illustrated in Figure 10.90, to heavy duty units, shown in Figure 10.92, handling minus 10 inch (250 mm) primary crushed copper ore at 4409 tph (4000 mtph) in an open pit mine application up a 35.5° incline, to high lift high capacity C-profile units with 120 inch (3000 mm) wide belts, in self unloading ship applications, as shown in Figure 10.86,elevating 11,000 tph (9,977 mtph) of iron ore pellets running at 1,200 fpm (6.1 m/s). The sandwich belt high angle conveyor facilitated the construction of a compact mobile ship loader (See Figure 10.91) that can operate at a narrow dock while easily elevating the bulk material up to the ship's hatch for discharge into the ships hold.

WWW.CEMANET.ORG has issued this document (1564) on Apr 24 2007 to Patcharapom Sritrakool, Suanluang, , Thailand

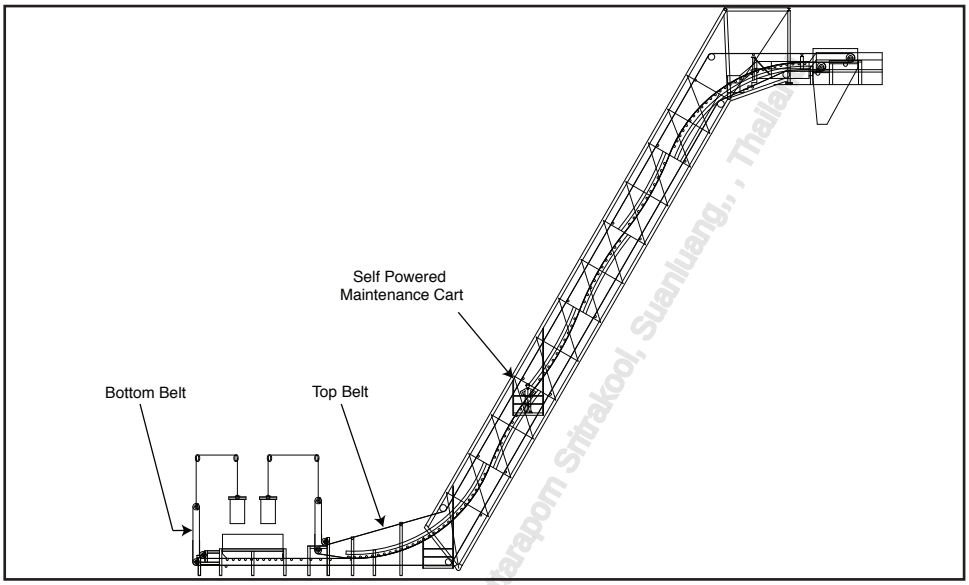

Figure 10.89
Mobile maintenance platform on a multi-"S" profile sandwich belt

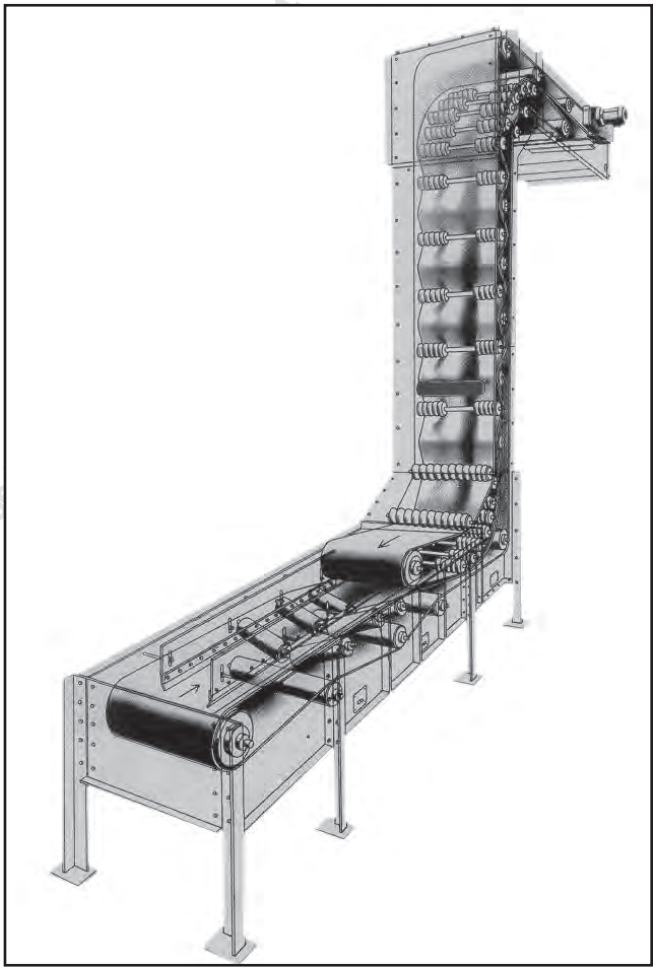

Figure 10.90
Totally enclosed light duty extended "S" profile sandwich belt

WWW.CEMANET.ORG has issu
170 Paparapom Sritrakool, Suanluang, , Thaila



Figure 10.91
Sandwich belt ship loader



Figure 10.92
Sandwich belt handling large lumps and steep inclines

WWW.CEMANET.ORG has issued this doc

Advantages of Sandwich Belt Conveyors

- Incline angles to 90 degrees are possible.
- Standard conveyor belting and components are used.
- High capacity, high lifts can be accomplished.
- Large lumps can be accommodated.
- Belts can be easily cleaned using standard belt cleaners.
- The approach can be incorporated locally in long conveyors when advantageous.

Disadvantages of Sandwich Belt Conveyors

- More mechanical components than other types of steep angle conveyors are required.
- Compared to pocket belt systems, relatively large radii concave or convex curves must be used, particularly for high capacity and/or high lift systems.
- Very fine, dry bulk materials such as cement cannot be elevated effectively using this method.
- Even units inclined at 90 degrees require maintenance access up the vertical portion.

Highly recommend consulting with the individual CEMA Member Manufacturer of steep angle belt conveyors for more information and specific inquiries.

WWW.CEMANET.ORG has issued this document (14604) on Apr 24, 2017 to [illegible]

Introduction Pg 431
Conveyor Belt Cleaning Equipment Pg 431
- Analyzing Carryback
- Performance Based Belt Cleaning
  - Measuring Carryback
  - Classification of Applications for Belt Cleaning
    - Belt Cleaner Application Rating
    - Belt Cleaner Application Ranking Examples
    - Carryback Levels
    - Structural Considerations
    - Blade Width
    - Bulk Material Characteristics and Belt Cleaning Considerations
  - Systems Approach to Belt Cleaning
    - Primary Location Belt Cleaning
    - Secondary Location Belt Cleaning
    - Tertiary Location Belt Cleaning
  - Belt Cleaner Tensioner Requirements
  - Belt Cleaners and Power Requirements
  - Belt Cleaners and Top Cover Wear
  - Specialized Cleaning Systems
    - Rotary Cleaners
    - Belt Cleaners for Belts with Patterns, Cleats or Ribs
    - Pneumatic (Air Knife) Cleaners
    - Belt Washing Stations
    - Cleaners for Special Applications
  - Handling the Removed Material
  - Plows
    - Return-run Belt Cleaning
    - Tail Protection Plows
    - Reversing Belt Plows
    - Belt Discharge Plows

Access Doors Pg 452
Stops Pg 452
- Shaft Mounted Backstop
- Conveyor Belt Stop

WWW.CEMANET.ORG has issued this document (1400 - 6 Apr 2017) to Siam Sinoacon Building., , Thailand

Impact Beds	Pg 454
Slider Beds	
Combination Impact, Slider and Roller Beds	
Belt Training Devices	Pg 457
Belt Turnovers	Pg 459
Pulley Cleaners	Pg 460
Wing-type Pulleys	
Deck Plates	Pg 462
Drip Pans	Pg 463
Spill Protections	Pg 463
Weather Protection	Pg 464
Full Covers	
Three-quarter Covers	
Wind Breaks	
Wind Hoops	
Magnetic Separators	Pg 466
Metal Detectors	Pg 468
Conveyor Belt Scales	Pg 469
Sampling Devices	Pg 469
Cross Belt Sweep Sampling	
Cross Cut Automatic Sampling Systems	
Rip Detection Systems	Pg 471
Electrical Conveyor Accessories	Pg 472
Pre-start Alarms	
Pull Cord Switches	
Blocked Chute Detectors	
Chute Level Switches	
Misalignment Switches	
Zero Speed Switches	
Accessory Power Requirements	Pg 476
The Importance of Maintenance	Pg 477

WWW.CEMA-TORS.ORG Purchased (4954) on Apr 24, 2017 to Patarapom Sritrakool, Suanluang, , , Thailand

INTRODUCTION

A conveyor accessory is a device or system that is added to the basic fabrication of a bulk material belt conveyor system. After selecting and designing the major components of a belt conveyor system, it is necessary to consider a number of secondary items that are discussed in this chapter as belt conveyor accessory equipment. Accessories include belt cleaners, wing-type tail pulleys, tramp iron detectors, in process weighing and sampling devices, weather and spillage protection devices and many other components and systems. Advances in technology related to conveyor accessories have had a major impact on the environmental friendliness of conveyors, improved productivity and greatly reduced personal injury. Today, almost every bulk material-handling conveyor has accessories added to the basic construction.

You must read the manufacturers installation and maintenance instructions for the accessory prior to installation or maintenance. Many accessories appear to be simple mechanical or electrical devices but are designed to operate at specific mounting distances or settings. Ignoring these requirements can result in unnecessary dissatisfaction with the accessory, damage to the conveyor system or personal injury. Warning labels provided with the accessory must be mounted in the prescribed location and if they become illegible through use it is the user's responsibility to replace them.

In some cases, it is best to let a plant's crew pick the accessory, as they will then have made a commitment to it and will work harder to maintain its performance. However, it is important for the plant personnel to weigh the initial price of the accessory against the life cycle cost as many manufacturers have developed systems that are priced more up front but provide lower overall cost and higher continuous performance.

CONVEYOR BELT CLEANING EQUIPMENT

Many bulk materials conveyed on belts are somewhat sticky. Portions of the material will cling to the conveying surface of the belt and not discharge with the rest of the load at the unloading point. The residual material is carried back on the return run, eventually falling off at various points along the belt line to cause housekeeping and maintenance problems. This material is commonly called carryback. Carryback leads to excessive wear, buildup on return idlers, misalignment of the belt, possible damage by forcing the belt against some part of the supporting structure, and adverse effects on conveyor operation and plant efficiency. In addition, accumulation of material on the ground or clouds of dust in the air can present a health and safety hazard. Therefore it is desirable to clean the belt. To minimize the risk of carryback material being released from the belt into the general plant environment, cleaning should take place as close to the discharge point as possible without being in the trajectory of the unloading material. The point is to get the belt as clean as possible before the belt-borne material can be dislodged into the air or transferred to rolling components such as snub pulleys and return idlers.

Definition

A conveyor belt cleaner is any accessory used to remove material adhering to the carrying side of a conveyor belt after the normal point of material discharge.

CEMA Recommendation

- Each conveyor discharge point should be designed to readily accept at least two conveyor belt cleaners and be designed to accept, with minor modifications, additional cleaners in the future.
- The cleaning width of the belt cleaner(s) should meet the minimum requirements as described in Table 11.10.
- The conveyor discharge chute should be designed so that the carryback cleaned from the cleaners will fall by gravity onto the receiving belt or chute, or a mechanical method of ensuring flow

www.CEMANET.ORG Revised publication dated March 2017 to include Addendum 1 dated April 2017 to Purchased from Enmakool, Subscription Licensed

should be included in the design.
- The belt cleaner should be maintained in accordance with the manufacturer's instructions.
- The manufacturer and user should agree upon standards of performance at the time of purchase.

The conveyor discharge chute and access platforms should be designed to allow for convenient installation and service of the belt cleaners in accordance with Table 2.28 and Figures 2.29 through 2.35. Consult a CEMA member for dimensions and recommendations on the type of belt cleaner(s) to be used.

Note: In this chapter arrows, (→ or ↔), are used whenever possible in the figures to indicate the normal, or acceptable, belt travel direction.

Analyzing Carryback

The material that sticks to the belt is typically the belt's cargo in its worst case. Carryback is finer and has higher moisture content than the normal material characteristics. Carryback often has higher cohesion and adhesion values than the general characteristics of the bulk material and will often be more compacted in the center of the belt due to the compressive action of the belt going over the idlers.

To compare carryback levels on belts it is necessary to talk in terms of the amount of material per unit area on the belt. Because of all the factors involved it is almost impossible to arrive at an absolute value for carryback. A more realistic representation is the mean of the normal distribution of the carryback values resulting from the sampling and data analysis. Each conveyor and each bulk solid will have a different mean and standard deviation, even in the same plant or on parallel conveyors. When the carryback level is specified it is usually field verified infrequently because of the difficulty and expense of taking the samples and analyzing them. As the belt wears it becomes more difficult to clean the belt and to compare historical carryback data.



Figure 11.1
Accumulated carryback under conveyor

When discussing belt cleaner performance the number that is useful to the conveyor operator is the amount of material that can accumulate under the conveyor. This number, expressed in pounds or kilograms per hour, provides the needed information for determining the extent of the clean up frequency

WWW.CEMANET.ORG Licensed to Mr. Pasakorn Sritrakool, Stanluem Co., Ltd., Thailand

without requiring conversions for belt speed, belt width, belt condition or other factors. Efficiency of belt cleaning has generally been defined as the ratio of the amount of carryback removed from the belt divided by the amount of carryback on the belt. Talking about the cleaning efficiency of belt cleaners is meaningless unless you also specify the average quantity of carryback on the belt per unit area, which can be easily converted into quantity of carryback per hour, day week or year. A belt that has a very thin layer of carryback can be cleaned at a marginal % efficiency while the same cleaner on the same belt with a very thick layer of carryback will have a much higher % cleaning efficiency. The condition of the belt and many other factors dramatically affect the level of carryback and the ability of belt cleaning systems to perform consistently over time.

To reach very low levels of carryback, many cleaners in series, or cleaning systems with water sprays or wash boxes, may be required. Research has shown that not all of the material that is measured as carryback falls from the belt. Some of it remains stuck to the belt or captured in imperfections of the belt surface. With extremely low quantities of carryback, as much as 50% of the material can remain on the belt after belt cleaning

For example, carryback of only 0.00022 lbs/ft^2 (1.0 g/m^2) on a 60-inch (1524 mm) belt loaded to 2/3 the belt width and traveling 800 feet per minute (4.1 m/s) can result in almost 3 tons of carryback per week. Even if 50% remains on the belt and cycles around, there is the potential of 1-1/2 tons of fugitive material being released from the conveyor belt as accumulated carryback or dust per week.

While this total seems high, cleaning consistently below 0.00022 lbs/ft^2 (1.0 g/m^2) is almost never seen in practice. Carryback levels in many applications can easily be 10 to 100 times as much. Because there are so many variables in cleaning a belt, it is virtually impossible to maintain zero carryback over an extended period of time.

Performance Based Belt Cleaning

Performance based belt cleaning contracts are becoming more common especially on systems that have critical environmental operating parameters or permit requirements. However, such contracts are problematic unless well thought out and documented. Adequately allowing for changes in the bulk solid characteristics and the condition of the belt are particularly challenging issues. Frequent and expert belt cleaner maintenance is required to keep critical systems performing consistently. Specifying very low levels of carryback is unrealistic and can be cost prohibitive.

There are so many variables in the process of cleaning a belt, and the concept of cleanliness is so subjective, that the cleaning performance specification must be established on a case by case basis. Performance is usually specified in g/m^2 of dry weight carryback allowed after cleaning. The amount of carryback allowed is determined in consultation with the operator and supplier based on site and process specific requirements. Carryback levels in the range of 10 g/m^2 are common in performance based contracts for critical applications.

Measuring Carryback

The accuracy of measuring a belt cleaner's effectiveness continues to be a subject for debate. Repeatability can be poor and data scatter can be high. Comparing results from different sampling devices is not recommended. Factors such as the type of sampling device, bulk material moisture content, belt cleaner condition, belt cover condition, and sampling location can cause variation in the results. Carryback is typically measured on newly commissioned systems in conjunction with performance based contracts. Measurements become more variable as the belt cleaner blades and the belt wear over time.

www.CEMENTDIGEST.com issued to [illegible] (4604) on April 4, 2017 by Chaiyaporn Srikool, Suanwadee, Thailand

Methods utilized to measure the performance or effectiveness of a belt cleaning system employ a sampling device placed in contact with the running belt to measure the residual carryback left on the belt after cleaning. Measurements are taken immediately downstream from the cleaning system being evaluated but before the belt contacts the snub pulley or first return idler. Sampling must be representative of the entire dirty width and length of the belt and under various conveyor operating and bulk material conditions. Sampling needs to take place where vibration is at a minimum. Most of the sampling devices utilize a single narrow blade or series of blades mounted in line with a small space between them and a receptacle to capture the removed carryback. The sampling device is raised against the belt at a predetermined pressure and for a time sufficient to almost fill the receptacle. Some sampling devices take samples from a serpentine path across the dirty portion of the belt width while other devices take samples in a fixed location.

To have statistically valid and comparable results requires multiple sampling over a period of time. Careful recording of belt speed, belt cleaner tension, sampling time, sampling pressure, and sampling locations are recorded for each measurement. Comparing performance between belt cleaner types or manufacturers requires a well designed experiment.

Measurements must be taken while the belt is in motion, therefore, safety precautions must be taken. Sampling mechanisms have been developed to allow the technician to remotely sample from a safe and guarded distance without reaching into the danger zone of a moving conveyor. The technician carrying out the testing must be trained on the sampling device, procedures and hazards.

Classification of Applications for Belt Cleaning

CEMA Member companies have established a best practice guide to provide uniformity in classifying belt cleaner applications among the various manufacturers of conveyor belt cleaning devices. Conveyor belt cleaners may be required to meet additional industry or government standards or other requirements such as for use in underground mines, hazardous locations, or for food handling. The use of conveyor belt cleaners may increase the power requirements of the conveyor drive. Each manufacturer is responsible for the design of their product including the suitability for the intended use and the resulting effects on the conveyor system. This classification guide assumes the application class ranking will consider the conveyor belt to be in "new" or "as new" condition.

Belt Cleaners and Conveyors

Selecting a belt cleaner for a given application requires the assessment of a number of factors, including belt condition, belt splices, belt speed, bulk material, ambient temperature, material size, and moisture content. There is a trend in industry to use lower cost raw materials with higher contents of fines. As the quality of the bulk material deteriorates the problems of belt cleaning increase and therefore the need for more attention to belt cleaning. It is important to design the cleaning systems for the problems presented by the "worst" material conditions, rather than the "ideal" or even "normal" operating conditions. That way, the cleaning system will be better able to cope with changes in the material without becoming totally ineffective.

Belt Cleaner Application Rating

The proper selection of a belt cleaner must consider the environment in which the belt cleaner must operate. Several factors will play significant roles in deciding the appropriate selection. CEMA Standard 576, Classification of Applications for Bulk Material Conveyor Belt Cleaning, provides a method to condense a complex operating environment into a single classification number to be used when specifying belt cleaners. The intent is the designer or end user would describe the application according to Table 11.4

www.CEMANET.ORG \ASSOC this document (3640) April 24, 2017 to Peterapon Sukkool, Conveyor Dynamics, Inc.

and the belt cleaner supplier would determine the appropriate types and numbers of cleaners based on the final ranking.

Ranking And Class System

The application class is determined using the following factors.

- Belt Width
- Belt Speed
- Belt splices
- Abrasiveness of the material
- Stickiness/moisture content of the material

Method

The environment in which the conveyor belt cleaner must operate is divided into two main categories, the conveyor belt itself and the material carried. There are three factors describing the conveyor belt and two factors describing the material for a sum total of five. Each of the five factors is rated individually. The final application score is the sum of all five factors.

The final score is divided into five application class levels and should be specified when conveyor belt cleaners are being selected. The selected conveyor belt cleaner should have a rating that meets or exceeds the calculated application class score. (**Note:** CEMA standard 550 is a valuable tool for assigning values to the material categories.)

Belt Cleaner Supply

There are many manufacturers and numerous designs of belt cleaners. By specifying the Application Ranking and the desired mean level of carryback remaining on the belt after belt cleaning, a supplier of belt cleaners should be able to specify the belt cleaning equipment necessary to achieve the objectives. There are often many structural and process equipment obstructions which can reduce the ability to install the proper duty rating and number of belt cleaners. These same obstructions make access for cleaning and maintenance difficult and the combination of fewer cleaners than required and difficult maintenance conditions will result in reduced belt cleaner performance.

WWW.CEMANET.ORG has issued this document (4.0) on Apr 24, 2017 to Pasakorn Sritrakool, Suanluang, , , Thailand

Belt Width	Score
< 24" width (< 610 mm)	0
24" – 42" width (610 mm – 1067 mm)	1
> 42" – 60" width (1068 mm – 1524 mm)	2
> 60" – 96" width (1525 mm – 2438 mm)	4
> 96" width (> 2438 mm)	8
Belt Speed	
< 300 fpm (< 1.5 m/s)	1
300 – 600 fpm (1.5 – 3.0 m/s)	2
601 – 1000 fpm (3.1 – 5.0 m/s)	4
> 1000 fpm (> 5.0 m/s)	8
Splice	
Vulcanized splices for the entire life of the belt	0
Mechanical splices with belt speed ≤ 500 fpm (2.5 m/s)	2
Mechanical splices with belt speed ≥ 500 fpm (2.5 m/s)	4
For the purposes of this classification conveyor belts must be new or in "as new" condition.	

Table 11.2
Belt characteristics used in determining belt cleaner application rating

Abrasiveness	Score
Mild (CEMA Standard 550 code 5, Abrasive index 1-17)	1
Medium (CEMA Standard 550 code 6, Abrasive index 18-67)	2
Severe (CEMA Standard 550 code 7, Abrasive index 68-416)	3
Stickiness/Moisture Content	
Mild/Dry (< 2% moisture by weight)	1
Medium/Moist (2-8% moisture by weight)	2
Heavy/Wet (> 8% moisture by weight)	4
Severe/Wet slurry with fines (CEMA 550 code F, O, V))	8
Choose the worst case expected conditions in situations where the conditions will vary	

Table 11.3
Bulk material characteristics used in determining belt cleaner application rating

The severity ranking for a particular application is the sum of the five individual scores from tables 11.2 and 11.3 and the final ranking is determined by Table 11.4

Total Score	Description
≤ 6	Class 1
7-10	Class 2
11-15	Class 3
16-23	Class 4
≥ 24	Class 5

Table 11.4
Belt cleaning application severity ranking

WWW.CEMANET.ORG has issued this document (pdf) on Apr 24, 2017 to Thanadon Srikaew, Siam Kubota Corporation Co., Ltd., Sriracha, Chonburi, Thailand

Belt Cleaner Application Ranking Examples

Imperial

A conveyor designer needs to specify belt cleaners for a conveyor carrying limestone from the quarry pit. The conveyor width is 36 inches (914 mm) and the belt speed is 420 fpm (2.1 m/s). The belt will be installed with a vulcanized splice but will be spliced mechanically during its life. Referring to Table 11.2 the belt width score is 1, the belt speed score is 2 and the splice type score is 2. Referring to CEMA Standard 550, the CEMA material code is $75A_{40}46MY$ which contains 6 as the abrasiveness rating. From Table 11.3 scores of 2 for abrasiveness and 4 for stickiness/moisture is assigned. The total score would be 1+2+2+2+4 = 11. From Table 11.4 the designer specifies a Class 3 application.

Metric

A designer needs to choose belt cleaners for a new conveyor in a coal terminal expansion. The material conveyed will be clean bituminous coal on an 1800 mm (70.9 in) wide belt at 4.1 m/s (807 fpm). The site specified a vulcanized splice for all belts. Referring to Table 11.2 the belt width score is 4, the belt speed score is 4 and the splice type score is 0. Referring to CEMA Standard 550, the CEMA material code is $50D_3$35LNXY which contains 5 as the abrasiveness rating for bituminous coal. From Table 11.3 a score of 2 for stickiness/moisture is assigned. The total score would be 4+4+0+5+2 = 15. From Table 11.4 the designer specifies a Class 3 application.

Carryback Levels

Carryback is measured as the dry weight per unit area of the width of the belt cleaned. Typically the dirty width of the belt is less than the full belt width. Carryback can be measured in a variety of ways and many CEMA Member companies provide this service. When writing performance based specification keep in mind that the cleaning level specified is the expected average value measured over a period of time and varying material and weather conditions.

Carryback can not be completely eliminated so the level of carryback should be based on the requirements of the specific application. For example a conveyor at a port facility may require a very clean belt, Level IV, to minimize carryback falling into the water or because the conveyor conveys multiple materials and contamination can not be tolerated. In other applications such as open pit mining more carryback can be tolerated, typically Level II, by virtue of the location and design of the transfers where clearing accumulations of carryback can be done with powered equipment and accumulations do not effect production.

Carryback Level	Carryback Amount, Dry Weight, Mean Value
Level I	> 0.05 lbf/ft² (250 g/m²)
Level II	> 0.02 to 0.05 lbf/ft² (100 to 250 g/m²)
Level III	> 0.002 to 0.02 lbf/ft² (10 to 100 g/m²)
Level IV	0.0004 to 0.002 lbf/ft² (2 to 10 g/m²)

Table 11.5
Carryback levels

$$C_b = L_{cb} \times BW_c \times V$$

Equation 11.6
Carryback in tons per hour

WWW.CEMANET.ORG has issued this document (1604) on Nov 24, 2017 to Patrapol Sitrakool, Siamtech Ltd, Thailand

Where:

BW_c = Belt width to be cleaned [in (mm)] (usually less than the full belt width)
C_b = Carryback tph (mtph)
L_{cb} = Carryback level lb/ft^2 (g/m^2) [Ref Table 11.5]
V = Belt speed fpm (m/s)

The conveyor must be designed with required clearances to allow cleaners to be installed and serviced. The cleaners themselves should be designed for both durability and maintainability. After a belt cleaner is installed periodic inspection, adjustments, and maintenance will be required.

The foremost requirement of cleaner design is that it must minimize the risk of injury to the belt, splice or cleaner itself. It would be counterproductive if a cleaner installed to enhance conveyor performance is likely to damage the belt. The second most important requirement is that the belt cleaners be designed for ease of service and installed where access for service encourages inspection and maintenance.

It is important that cleaners be installed out of the flow of the main material body and that the cleaned materials cannot adhere to the blades and structure. Cleaners should be applied at or near a point where the belt is supported by a pulley, pressure roller or other device to prevent the belt from being forced up by the cleaning action (resulting in less effective cleaning) or where the belt has formed a cupped shape making it difficult to clean.

Wing pulleys, using minimum diameter pulleys, discharge chute design, negative or low belt tensions are just a few examples of design and system choices that can have a detrimental effect on belt cleaner performance and power requirements.

Belt cleaner manufacturers and some independent consultants can perform carryback testing to establish the performance of a belt cleaner system. While the methodology may vary, it is important to recognize that belt cleaning is a process and therefore several measurements under varying conditions are required to establish a mean value of carryback. Contact a CEMA Member company for specifying the proper style, duty rating and number of cleaners for a given application.

From the Imperial Belt Cleaner Application Ranking Example: Limestone quarry pit application
Application Ranking Class 3: (Ref. Table 11.4) BW = 36 in V = 420 fpm

Carryback
A cleaning Level II = 0.05 lb/ft^2 is specified as adequate for this quarry pit (Ref. Table 11.5)
BW_c = 36 in - standard belt edges = 36 - 2 x (0.055 x BW + 0.9 in) = 30.24 in (Ref. Table 4.4)
$L_b = 0.05 \frac{lbf}{ft^2}$ (if the lower end of Level II were specified $L_b = 0.02 \frac{lbf}{ft^2}$

$$C_b = L_{cb} \times BW_c \times V = 0.05 \frac{lbf}{ft^2} \times 30.24 \text{ in} \times \frac{1 \text{ ft}}{12 \text{ in}} \times 420 \frac{ft}{min} \times \frac{60 \text{ min}}{h} \times \frac{1 \text{ t}}{2000 \text{ lbf}} = 1.6 \text{ tph (1.4 mtph)}$$

Belt cleaner suppliers would be responsible for supplying equipment of appropriate duty rating for a class 3 Application Ranking and, in sufficient numbers and styles to clean the belt to Level II carryback on a consistent basis, when installed and maintained as instructed.

Figure 11.7
Example belt cleaner carryback calculation

www.CEMAnet.org has issued this document (1405-09) on Apr 24, 2017 to Pattaraporn Sirakaew (pansiriuang@..., , Thailand)



Figure 11.8
Cupped belt

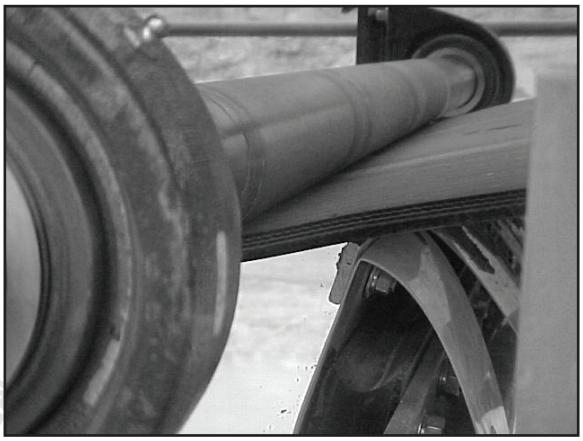

Figure 11.9
Live shaft roller belt cleaner support

Structural Considerations

The mounting of belt cleaners is often made difficult or less than ideal because the basic spacing and support requirements have not been considered in sizing of the chute or location of conveyor structural elements and installation of process piping and conduit. Because there are a wide variety of belt cleaner designs available it is recommended that a CEMA Member belt cleaner manufacturer be consulted during the design of a system so that adequate structural support is provided. Chapter 2, Figures 2.32 and 2.33 provide guidance on belt cleaner locations and access for service absent specifics from the manufacturer.

Blade Width

Some belt cleaners are made with blades that are less than the full width of the belt while others are designed to cover the entire width of the belt. In some cases, such as when discharge plows are used or when the belt is washed, it may be advisable to provide cleaning for the full width and the edges of the belt. These differences in design and construction offered by CEMA Member manufacturers allow for variations in belt tracking, bulk material loading and customer preferences. Table 11.10 provides suggested minimum blade coverage vs. belt width in accordance with CEMA's 2/3 the belt width for standard loading chute width recommendation.

WWW.CEMANET.ORG has issued this standard (Aug-14) on Aug 24, 2017 to Pattarapom Sirisa

Belt Width		Minimum Blade Coverage	
in	mm	in	mm
18	500	12	335
24	600	16	400
30	800	20	535
36	1000	24	667
42	N/A	28	N/A
48	1200	32	800
54	1400	36	935
60	1600	40	1070
72	1800	48	1200
84	2000	56	1340
96	2400	64	1600
108	2800	72	1875
120	3000	80	2000

Table 11.10
Minimum blade coverage for conveyor belt cleaners

Bulk Material Characteristics and Belt Cleaning Considerations

The material to be cleaned from the belt affects the selection of the belt cleaner system so it is important to be able to define and classify the bulk material. It is not unusual for the quality of the bulk material to change over time, when sources are changed or specifications varied. These changes can have a dramatic effect on the ability of a cleaning system to function. Therefore, it is important to be able to classify the properties and characteristics of the bulk material. CEMA Standard 550 details a classification system that, when used with sieve analysis and moisture content, produces a reasonable description of the bulk material. The basic elements of the classification system are Size, Flowability, Abrasiveness and Miscellaneous characteristics.

Bulk material size is more appropriate as one of several factors determining the robustness of the equipment to be supplied. For example if the bulk material is classified as Size = C all of the material is 1/2 inch (13 mm) or less in size. Normally it would be expected that this type of application would use a standard duty belt cleaner as far as the cleaner size and support structure required. If the classification was D, (<16 inch (<400 mm)) then consideration would be given to a heavy duty cleaner and support structure; additional precautions may also be taken to locate the cleaner to make sure none of the bulk material can impact the cleaner, become lodged between the cleaner and belt and damage either the belt or cleaner.

Flowability is generally used to describe how the bulk solid will flow in a chute or from storage, but is also a good indicator of how the carryback will flow from the cleaner and in chutes. Considerable care must be taken to design and locate dribble chutes so that the carryback will flow back into the main flow of bulk material.

www.beltcon.net

Abrasiveness is a property that directly affects the belt cleaner blade life. Typically the more abrasive the bulk material the more abrasion resistant the blade must be to provide a reasonable blade life. For mildly and moderately abrasive materials it is common to use rubber and urethane blades on belt cleaners. For extremely abrasive bulk materials it is common to use hardened alloy steel or tungsten carbide. There are many other factors that affect blade selection; abrasiveness is only one indicator.

Miscellaneous properties of bulk solids that have the most common effects on the selection of belt cleaner equipment are; static, stickiness, corrosive, interlocking, packing and elevated temperatures. There are numerous special processes that require careful consideration for safe and effective application of belt cleaners. Obvious examples are food products that may become contaminated, or the explosive potential created by the bulk material, belt cleaner blade material, or the gasses that may be present. Whenever special conditions are known, or specific construction techniques and materials are used in a process, a CEMA member should be consulted for recommendations on belt cleaning equipment.

Cleaning is improved by the use of vulcanized or recessed mechanical splices on the belt. Improperly installed or worn splices can catch on cleaners and cause them to jump and vibrate or "chatter". If mechanical splices are used, they should be recessed to the supplier's recommendations. In addition, the belt cleaner mount should incorporate some relief mechanism that allows the blades to be pushed momentarily away from the belt and then return to cleaning position. Diagonal mechanical splices can increase the life of the mechanical splice and improve the performance of the belt cleaner since the blade will not contact the splice all at one time.

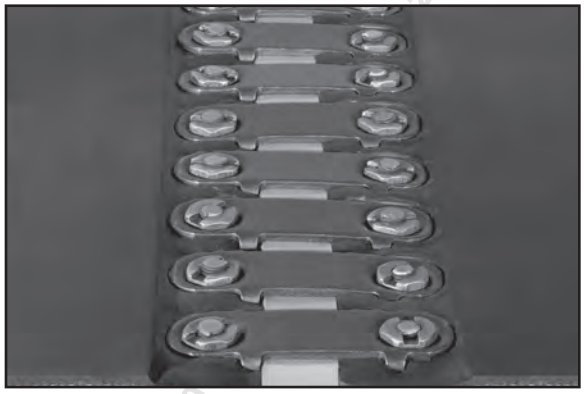

Figure 11.11
Recessed mechanical splice

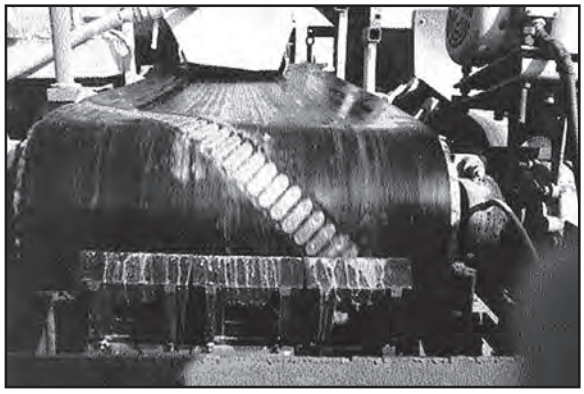

Figure 11.12
Diagonal mechanical splice

In addition to belt cleaners at the conveyor discharge, pulley cleaners and tail protection plows may also be required.

WWW.CEMANET.ORG has issued 24/2/17 to Goatbeard Strickland (Strickland, , Trustee)

Systems Approach to Belt Cleaning

Frequently, more than one "pass" at the belt must be made to effectively remove carryback material. These systems can be composed of multiple cleaners located on the face of the pulley or a single cleaner on the pulley with one or more cleaners positioned at a point after the belt leaves the discharge pulley.



Figure 11.13
Multiple belt cleaners

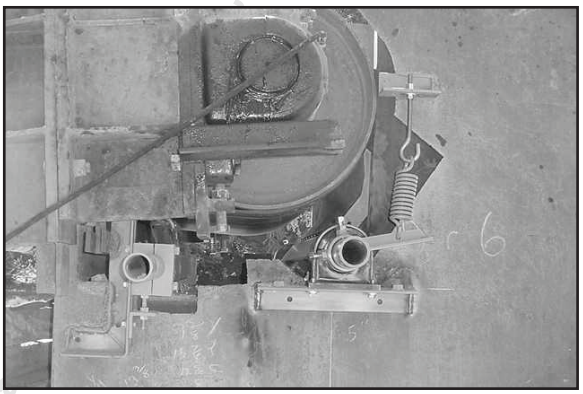

Figure 11.14
Multiple belt cleaners in a system

To reach lower levels of carryback, water sprays, wash boxes or specialty cleaners may be required.

Primary Location Belt Cleaning

Generally the most desirable position for mounting belt cleaners is on the discharge pulley in a zone that is out of the material trajectory. The cleaner design and the diameter of the pulley determine the maximum number of cleaners that can be installed in the primary location. Because of the position on the head pulley, the material removed is most easily discharged into the main flow chute. Therefore this location is considered the primary location for belt cleaning. See Figure 2.32.

To avoid or minimize the risk to the belt, blade and splice cleaners installed in the primary location commonly use resilient elastomer blades (urethane or rubber) inclined into the direction of belt travel (positive rake angle) or, metal blades at 90 degrees to the belt (zero rake angle). Primary location cleaners are typically tensioned against the belt with moderate pressure. Lower blade-to-belt pressure means that the tensioning system will be able to relieve the blade - to bounce the blade away from the belt - when a splice or obstruction moves past the cleaning edge, to reduce the risk of damage. The low cleaning pressure also provides the benefits of improving blade life and reducing belt wear. The cleaning effectiveness of primary location cleaners varies greatly with the cleaner design, blade material and the amount of carryback on the belt.

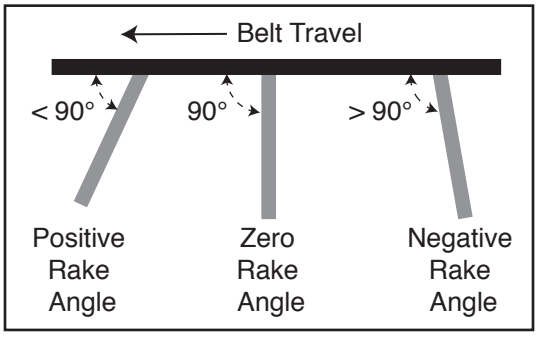

Figure 11.15
Belt cleaning blade angles

WWW.CEMANET.ORG has a site license agreement (GMU#3) as of April 4, 2017 to Patt... Thank you!

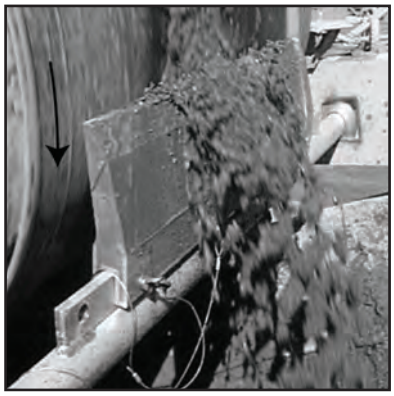

Figure 11.16
Positive rake



Figure 11.17
Zero rake

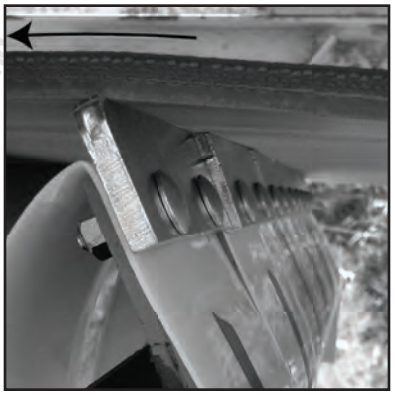

Figure 11.18
Negative rake

Secondary Location Belt Cleaning

The closer to the conveyor's discharge point the carryback is removed the easier it is to design the chute so the carryback will flow readily back into the main material flow. The second most practical location for belt cleaners is the space between where the belt leaves the head pulley and where it contacts the first snub pulley, bend pulley or return idler. Unless the cleaner is located close to where the belt leaves the head pulley the cleaner should be positioned opposite a roller to stabilize the belt. This location for belt cleaners often involves design compromises such as installing dribble chutes with minimal slopes or difficulty avoiding interference with structural members. Therefore it is considered the secondary location for belt cleaning. See Figure 11.19.

The blades for cleaners used in the secondary location are often made of a hard material such as tool steel or tungsten carbide. Some operations prefer to avoid the application of a metal blade against the belt, so urethane or rubber is also used. The cleaning effectiveness of secondary cleaners varies greatly with the cleaner design, blade material and the amount of carryback on the belt.

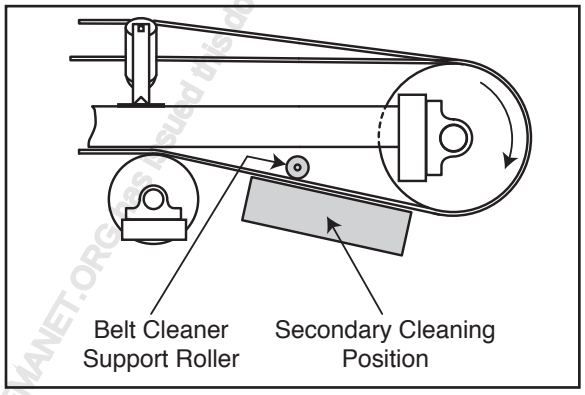

Figure 11.19
Belt cleaner secondary location

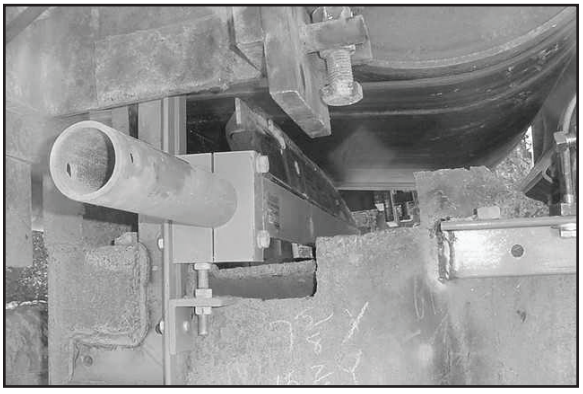

Figure 11.20
Belt cleaner in a secondary location

The angle of the blade against the belt in a secondary cleaning location is an important consideration. A scraping or perpendicular angle is often used for metal bladed secondary location cleaners, as metal blades in the peeling position are quickly honed to extreme sharpness. Rubber and urethane bladed cleaners used in the secondary location are usually positioned perpendicular to the belt. See figure 11.17.

WWW.CEMANET.ORG has issued this document (1434) on 3-1-2017 (Kulpapom Sritanyarat)

Tertiary Location Belt Cleaning

In some cases it is desirable to clean the belt in a position other than the primary or secondary location. This is often the case with wash boxes and specialty cleaners. In other cases design limitations prevent installing cleaners in their primary or secondary location. Usually locating a cleaning system in a tertiary position introduces the additional problem of how to handle the carryback. In the case of a wash box the carryback material in slurry form is usually piped away by gravity flow. Sometimes special areas are designed for collection of the carryback and mobile equipment is used to remove the collected carryback. In other cases auxiliary chutes can be installed to introduce the carryback onto a belt. See Figure 2.32.

Blade Materials

Cleaning blades are available in a wide variety of materials; each conveying operation should specify blades that best suit its operating characteristics. The blades in an engineered belt cleaning system are an integral part of the design, and using blade materials that are not suitable for the design will most likely result in poorer performance and may damage the cleaner or the belt. Strips of belting should not be used for belt cleaning because there may be embedded steel cables or fines of abrasive material caught in the belt carcass, both of which can cause excessive wear of the moving belt.

Belt Cleaner Tensioner Requirements

Maintaining blade-to-belt pressure in the optimum range is critical to efficient and effective cleaning performance. The choice of tensioning method depends on conveyor and cleaner specifications and plant preferences.

When adjustment or re-tensioning is required, the belt should be stopped and properly locked out unless the belt cleaner has been specifically designed for service while the belt is in operation and the service procedure has been approved by the user's safety department. The cleaner and tensioner unit should be designed to facilitate any required service. Some manufacturers have factory trained service technicians who are trained to maintain the belt cleaners at an optimum performance level. Most manufacturers offer training programs for plant personnel to learn how to maintain the equipment.

Belt Cleaners and Power Requirements

Applying one or more cleaners against the belt increases the drag against the belt and so raises the conveyor's power consumption. However, the consequences of not installing and maintaining effective cleaners may prove a more serious drain of conveyor power, because power consumption arising from out of balance idlers, material accumulations, or sliding over idlers with seized bearings. Calculations for the impact of belt cleaners on conveyor power requirements are detailed in Chapter 6. These calculations should be reviewed whenever cleaning systems are changed or upgraded.

Belt Cleaners and Top Cover Wear

There are many variables that determine belt wear. A research study has examined the issue of whether belt cleaners adversely affect the life of the belting. The study indicated that a belt cleaner can induce wear of the belt, but the wear was approximately one-half of the wear seen when the belt runs through abrasive carryback without benefit of cleaners. Other sources report the wear from belt cleaning to be between 5 and 25% of the wear from loading the belt as predicted by belt manufacturers formulae.

WWW.BEARTEC.COM Use of this document (1,000) on Apr 24 '21 - to Paul Scott Liverpool, Sustainability Team

Specialized Cleaning Systems

In addition to conventional "bladed" belt cleaners, there are a number of alternative systems that may be selected to fit plant preferences, conveyor specifications, and cleaning requirements.

Rotary Cleaners

These could be free-wheeling (driven by the motion of the belt) or powered by an electric motor. Rotary cleaners are generally suitable for applications up to 200 °F (93 °C) but brush style cleaners can be equipped with metal bristles for high temperature applications. Brush style cleaners can be effective on dry materials or uneven belt profiles; however, they sometimes encounter problems with wet or sticky materials when material builds up in the bristles of the brush.

Another type of rotary cleaner is based on a urethane or rubber spiral pattern. This type of cleaner can be freewheeling or driven. The spiral presents an ever-changing point of contact with the belt that results in a scrubbing action to remove material from the belt surface. The spiral type belt cleaner is compatible with mechanical fasteners and since the spiral design generally evolves outward from the center of the device there is no effect on belt tracking. A variation of this design is rubber disks that wipe the belt.



Figure 11.21
Rotary belt cleaner

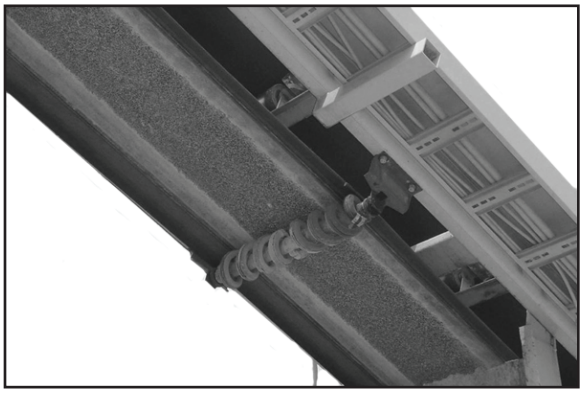

Figure 11.22
Rotary belt cleaner in use

Belt Cleaners for Belts with Patterns, Cleats or Ribs

In some applications belts are modified to have, raised or indented patterns, ribs or pockets created by a corrugated side-wall, or tall cleats spaced at regular intervals either perpendicular or at an angle to center line of the belt. In other cases belts are designed with special thicknesses or shapes molded into them to work in combination with alternative methods of carrying the belt or forming a continuous tube. All of these applications create limitations on belt cleaning that must be carefully considered. In some cases it is as simple as allowing enough room for adequately cleaning the belts but in others the limited ability to clean the belt can reduce the capacity of the belt or cause significant operating problems, particularly when the bulk material is sticky and hard to handle.

Belts with raised patterns that are less than 1 inch in height can be cleaned in most cases to an acceptable level by a rotary brush cleaner or a finger style cleaner. If the belt must be kept very clean it will be necessary to use water sprays in addition to one or more of these specialty cleaners. Brushes and finger cleaners are also successfully used to clean belts that have indented patterns.

www.CEMAT.org (Do not copy this document)
Panalpina Sirakool, Rayong, , Thailand



Figure 11.23
Brush style cleaner

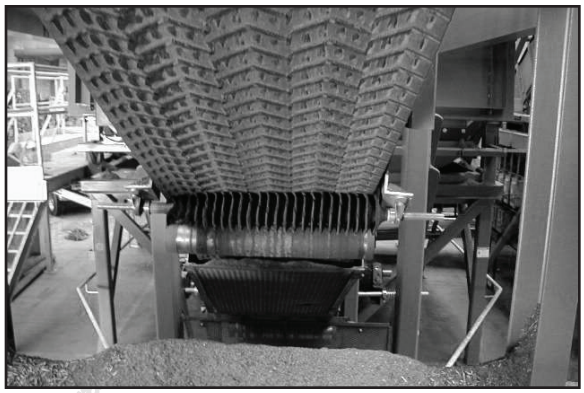

Figure 11.24
Finger style cleaner

There are many styles of specialized belts that are carried not on conventional idlers but on cables, overhead trolleys or specially designed rollers. Generally these belts are loaded and unloaded in a conventional manner and can be cleaned with standard belt cleaners that are suited for the material being conveyed. Often cleaners can be located in the preferred primary and secondary positions. However, the tension that belt cleaning introduces into the belt must be considered as it can cause these belts to mistrack, buckle or even come free from their carrier mechanisms.

Pneumatic (Air Knife) Cleaners

These direct a stream of air over the face of the pulley to shear off carryback. These systems can be effective in removing dry or extremely wet materials; their disadvantages include the continuing expense of providing the air stream, and the creation of additional airborne material that settles someplace else in the plant or builds up in the chute. The benefits are there are no wear parts and the cleaner is well suited for belts with mechanical fasteners.

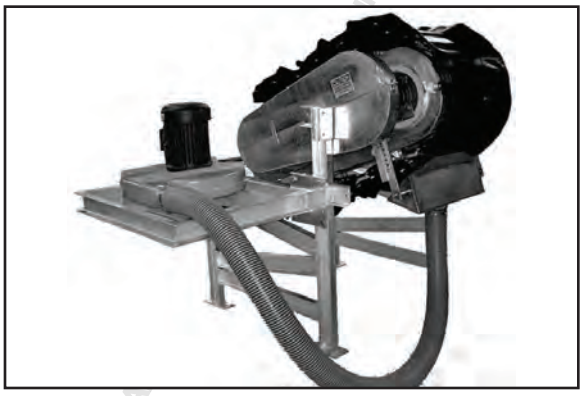

Figure 11.25
Pneumatic belt cleaner

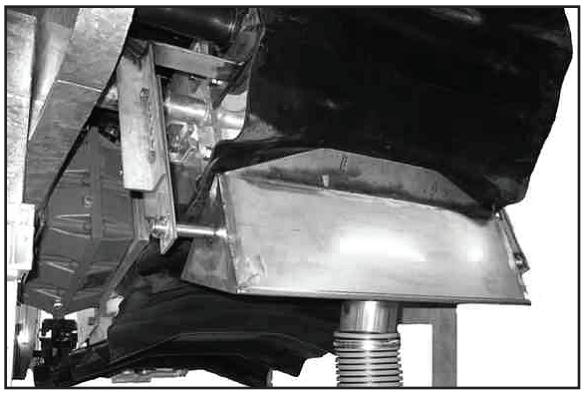

Figure 11.26
Pneumatic belt cleaner in use

Belt Washing Stations

Two styles of cleaning systems use water. The first directs a mist of water at the belt using water sprays or fog to assist in the scraping process. The second washing system uses sprays of water and cleaners in enclosed wash boxes to remove the carryback from the belt. After the nozzles wet the belt, one or more cleaner assemblies with urethane, rubber or metal blades remove the carryback material and water from

the belt. Either style can provide effective cleaning, but poses the problem of disposing of the slurry of removed material and water. Water spray or fog systems generally use very little water in comparison to the tonnage on the conveyor so the water is allowed to mix with the carryback and enter process. With wash boxes the water can be filtered and reused or recycled through the plant run off system. Mechanically filtering the water can be problematic since the carryback particles are often sub micron in size. Use of a settling system is preferred where the sludge is periodically returned to the process by pumping or with mobile equipment. The spray system uses less water, and consequently reduces the water/sludge handling problems. Both systems must be carefully engineered to avoid problems in freezing weather. Frequently users object to using water because of the perceived drawbacks of a thermal penalty in fuel applications and problems from freezing weather. However, the benefits of using water make it worth considering even if it is used seasonally or intermittently to improve and maintain cleaner efficiency.

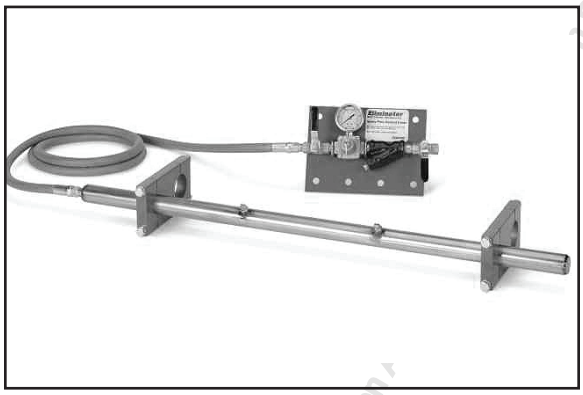

Figure 11.27
Belt water spray system



Figure 11.28
Belt water spray in use

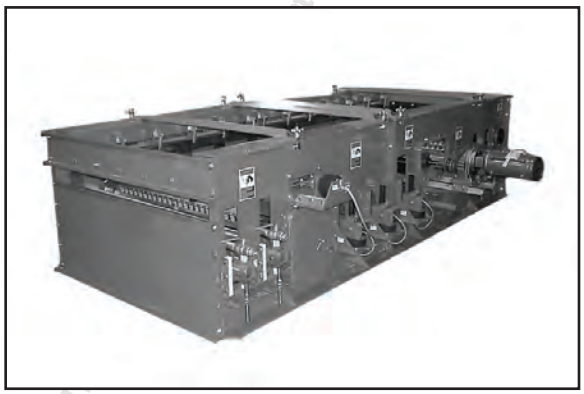

Figure 11.29
Belt wash box



Figure 11.30
Belt washing system in use

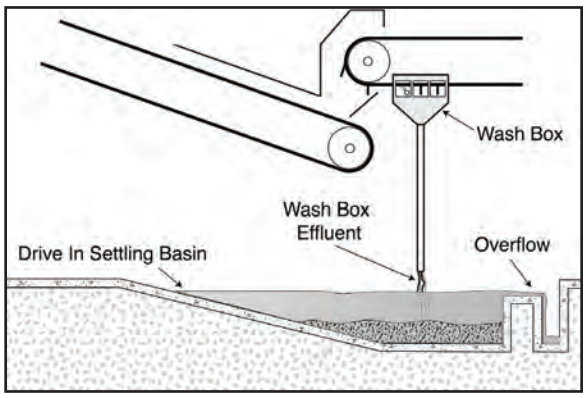

Figure 11.31
Water treatment concept

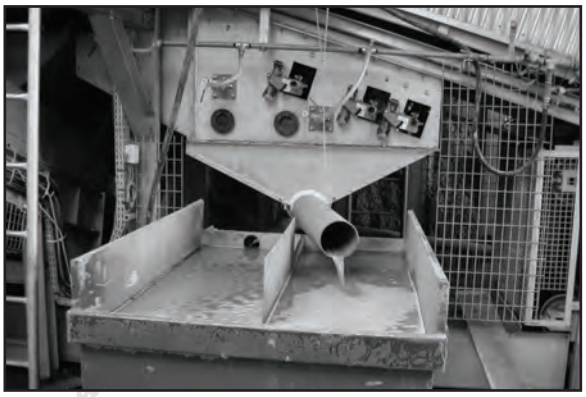

Figure 11.32
Simple water treatment system in use

Cleaners for Special Applications

Manufacturers now offer a variety of cleaners to fit applications with particular requirements. Some of these specialty systems include food-grade cleaners, cleaners utilizing electrically heated blades to remove extremely sticky material, high-temperature cleaners for continuous duty in conditions up to 450 °F (232 °C), and cleaners for belts with ribs, cleats or chevrons. Pocket belts require special beater or vibratory cleaners that attempt to remove the carryback by inducing an accelerating force into the material to break the bond with the pocket belt. The characteristics of carryback require that the acceleration must be very high, often 9g or more, to achieve significant cleaning. These high forces lead to reliability and maintenance problems with beater type cleaners.

Handling the Removed Material

The fact that carryback clings to the belt past the discharge point indicates that it has different characteristics than the rest of the load. The particles tend to be finer, with a higher moisture content. Even after its removal from the belt, this material presents serious capture, handling and disposal problems. Carryback often exhibits the worst possible properties including thixotropic characteristics where the material can "run up hill", or materials that create exothermic reactions resulting in concrete like deposits. Carryback can also have very high or low pH creating corrosion problems. Although measured bulk solid proprieties give some guidance, using the bulk solid characteristics of the cargo often does not provide the needed design values for handling carryback. It may be necessary to run special tests on carryback samples to obtain reliable adhesion and cohesion values as the carryback often has significant strength at very low or even negative (it will stick upside down on the belt) consolidation pressures.

Ideally, the conveyor's discharge chute is sufficiently large enough so material cleaned from the belt can fall through the same chute, where it is collected and reunited with the main stream of material. If the main chute is not large enough, an extra fines chute or dribble chute should be added under the secondary cleaners to prevent the cleaners' encapsulation in these sticky, cementatious materials. Care must be taken to prevent this smaller chute from bridging over or clogging with the sticky fines. Measures to prevent dribble clogs include the use of low-friction liners or a small vibrator to the material in motion.

Special scavenger or fines conveyors are sometimes used to return the belt scrapings to the main material stream. These devices - often vibratory conveyors or drag-scraper feeders are particularly common in installations where multiple secondary cleaners are installed at some distance from the discharge pulley or where the dribble chute angle is too low for carryback to flow into the main chute.

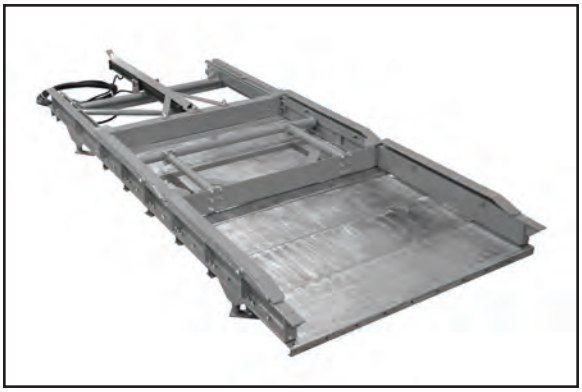

Figure 11.33
Scavenger conveyor



Figure 11.34
Vibrating dribble chute

Plows

Return-run Belt Cleaning

Even though a belt conveyor is carefully designed, spillage from the carrying side of the belt will occasionally occur at the loading point and elsewhere along the belt such as at a tripper. This fugitive material can land on the return run of the belt, eventually becoming trapped between the belt and the tail pulley causing possible damage to, or misalignment of, the belt. Two devices used to prevent this difficulty are deck plates and tail protection plows.

Definition
A conveyor return belt plow is an accessory used to remove refuge material from the inner surface on the return side of a conveyor belt usually arranged in a V shape or a diagonal across the belt.

CEMA Recommendation

- Each one-direction conveyor will have at least one return belt plow mounted on the inside surface of the belt just prior to the tail pulley.
- Each reversing conveyor will have at least 2 return belt plows mounted on the inside surface of the belt just prior to the terminal pulleys.
- A return belt plow is to be located immediately downstream of each loading point on a conveyor.
- A return belt plow is to be located just prior to first pulley where the belt enters any intermediate pulley arrangement and where the inner surface of the belt contacts a pulley.

Typically, a belt plow for cleaning the return run is composed of a stationary scraper of an elastomeric compound that contacts the inner surface of a conveyor belt for the purpose of (deflecting) particles that would become trapped between a pulley and the belt. These units can be V (at a 45 to 60 degree angle) shaped to deflect material to each side of the belt or diagonal (at a 45 to 60 degree angle) shaped to deflect material to one side of the belt.

On belt conveyors that travel only in one direction, the plow can be a "V"-plow. The point of the "V" is aimed toward the head pulley so any loose material carried on the belt's inside surface is deflected off the conveyor by the wings of the plow.

www.CEMA.ORG Instructional Document (3464) on ASM 4.2 (10) Pattarapom Sritrakool, Suanluang

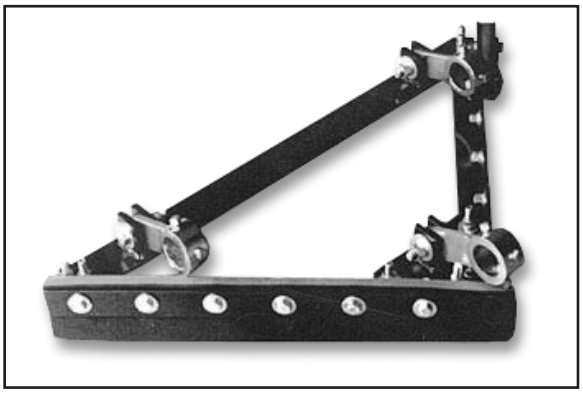

Figure 11.35
V-Plow return belt scraper



Figure 11.36
Return V-Plow in use

If the conveyor has two directions of movement – through either reversing operation or accidental rollback – the return belt scraper should be a diagonal plow that provides protection regardless of the direction of belt movement. Diagonal plows are installed across the belt at an angle of 45 degrees to the direction of travel.

Tail Protection Plows

Installed on the upper side of the return belt just before it enters the tail pulley, a tail protection plow (or return belt scraper) removes any material spilled or foreign objects such as broken idler components onto the return run. It thus must be designed to prevent this spilled or foreign material from becoming trapped between the belt and the tail pulley. Depending on conveyor configuration and load, it may be desirable to install return belt plows to protect additional pulleys.

A tail protection plow is typically a heavy duty diagonal plow or "V"-plow using a rubber or urethane blade to push any fugitive material off the belt. In most cases, the plow rides on the belt, tensioned against the belt either by a tensioning device or simply by its own weight, free to float up and down with any fluctuations in belt travel. In other designs the tail protection plow is a fixed steel dog house style of barrier located just above the belt and close to the pulley with angled surfaces to deflect lumps and larger objects away from the belt and pulley nip point. Both styles of tail protections plow should be located between the tail pulley and the first return idler. The tail protection plow should be secured with a safety cable or chains to prevent it being carried into the pulley should it become dismounted. When used to eject foreign objects such as failed idler rollers or large lumps the plow must be high enough to prevent the object from jumping over the plow and strong enough to handle the impact.

Reversing Belt Plows

If the conveyor has two directions of movement – through either reversing operation or accidental rollback – the return belt scraper should be a diagonal plow that provides protection regardless of the direction of belt movement. Diagonal plows are installed across the belt at an angle of 45 degrees to the direction of travel.

www.CEMAnet.org - Purchased by [illegible] on [illegible] (1:57:00 PM) Mar 24, 2017 for [illegible]

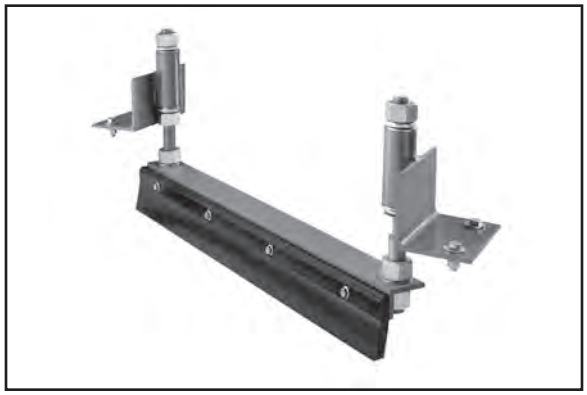

Figure 11.37
Diagonal plow return belt scraper

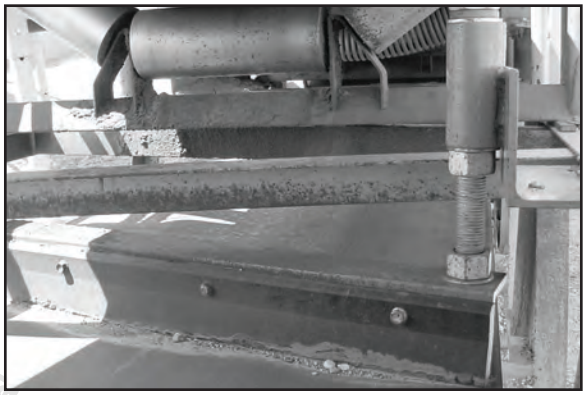

Figure 11.38
Diagonal plow in use

If the conveyor is truly two directional, so either pulley can serve as a discharge pulley, diagonal plows should be installed at each end.

Belt Discharge Plows

Typically, a discharge plow consists of a slider bed to flatten the belt from the bottom, and an actuated angled plow blade on the top, that contacts the belt thus forcing the material to the side of the belt as the belt moves between the slider and the blade. They are typically used with relatively slow belt speeds and on belts that are designed with low belt tension. There are many designs used to actuate the plow blade and in some cases the discharge plow is V shaped to discharge on both sides of the conveyor. Discharge plows are often used in foundry and sewage treatment facilities for discharging at multiple locations along a belt in applications where a traveling belt tripper is not justified.

Definition
A conveyor belt discharge plow is an accessory used to provide multiple discharge points for the material being carried on a conveyor belt at an intermediate location between the load point and the head terminal pulley.

CEMA Recommendation

- Discharge plows should be designed for each application. Contact a CEMA member for design assistance.

Discharge plows can cause mistracking of the belt to the side opposite the discharge by creating an unbalanced force against the belt. Allowance for additional belt tracking accessories is recommended. The power requirements of discharge plows can be a significant amount of the total power requirement for the conveyor and must be carefully calculated. Discharge plows by their nature create additional problems in spillage at the transfer locations and can require higher than normal maintenance to compensate for wear and damage to the plow blade. Applications where discharge plows are used should be designed to prevent overloading of the conveyor as heavily loaded belts can overwhelm the capacity of the plow to discharge the material. Chapter 6 discusses the power required for discharge plows.

www.CEMANET.ORG has issued this document (1964) on Nov 29, 2017 to Pattarapom Sritra

ACCESS DOORS

Studies have shown that as much as 30% of a mechanic's time is used in gaining access to the equipment that needs service. Access doors that are strategically placed and sized will greatly reduce the difficulty of servicing equipment and thus lead to more frequent and effective maintenance. While access doors can provide convenient access, caution must be used in placement. Their intended use is to provide access to equipment, and such access while the conveyor is in operation may create serious safety hazards. Hazards that workers may be exposed to include flying or falling material and moving machinery. Often access doors lead to confined spaces and proper precautions are needed before entering a confined space.

Definition
An access door is an accessory designed to cover openings that provide convenient access for inspection and maintenance of equipment inside a conveyor enclosure.

CEMA Recommendation

- Access doors should be sized and placed on enclosures in locations that facilitate easy service of equipment.
- Warning labels are to be placed in a conspicuous location near or on the access door.
- Access doors should be interlocked with the conveyor drive to prevent injuries when known potential hazards exist inside the enclosures.
- Access doors should be provided with screens to prevent accidental contact when hazards exist.

Access doors are to be designed for normal opening and closing with only the use of hand tools (ASME B15.1). In many common applications access doors are opened only occasionally and the hinges and closures on access doors must be designed for corrosive environments or they will become inoperative. Access doors are often used for returning spilled material into the process or removing blockages, and care must be taken in the design and placement so cleaning tools cannot come into contact with moving conveyor components.

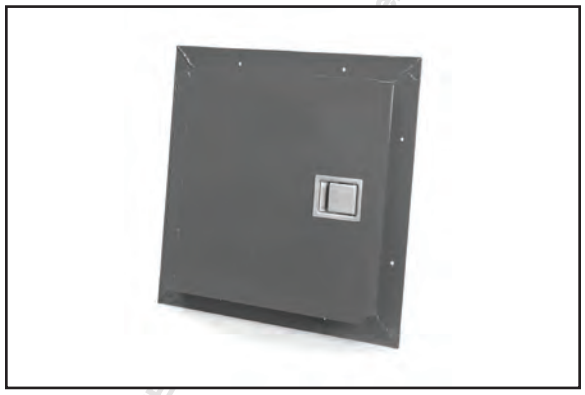

Figure 11.39
Access door

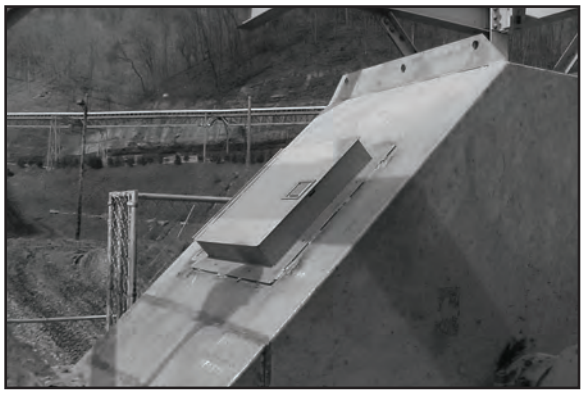

Figure 11.40
Access door on chute

STOPS

Shaft Mounted Backstop

A loaded inclined belt conveyor of sufficient slope tends to move backwards when forward motion is stopped by a cessation or interruption of power or because of a mechanical failure in the driving machinery. Should the loaded belt move backward, the material would pile up at the tail end of the

conveyor. This could create an extreme safety hazard to personnel near the conveyor, seriously damage the belt and/or drive components, and result in the need to clean up and dispose of tons of spilled material. To prevent this reversal of motion, a backstop is used.

Backstops are typically applied to inclined belt conveyors and bucket elevators. Because backstops permit travel of the conveyor only in the forward direction, they cannot be used on reversing conveyors or on declined (regenerative) conveyors. In those cases a brake must be used.

Definition
A shaft-mounted backstop (often called a holdback) is a mechanical accessory that allows a conveyor to operate only in the forward direction. It permits free rotation of the drive pulley in the forward direction but automatically prevents rotation of the drive pulley in the opposite direction. Backstops are used on inclined belt conveyors and bucket elevators.

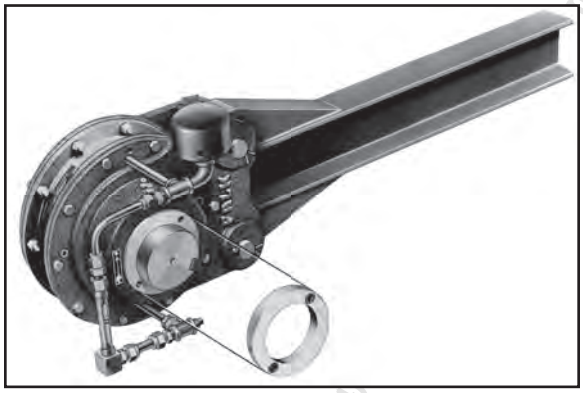

Figure 11.41
Backstop

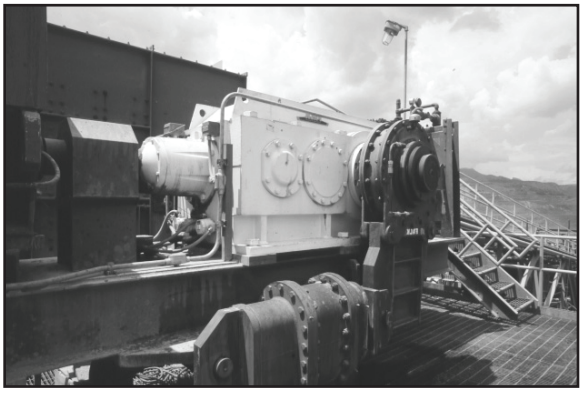

Figure 11.42
Backstop on conveyor

Conveyor Belt Stop

When an incline belt fails, the failure usually occurs near the discharge pulley where the maximum tension T_1 is developed. The end of the loaded portion of the failed belt will accelerate in the reverse direction usually causing damage in the surrounding area and can be a danger to personnel in the vicinity. The end of the return side of the belt will also accelerate toward the tail of the conveyor causing damage to return rollers and other components in the area.

A conveyor belt arrester is installed prior to the point of maximum tension in the belt so that the ends of the belt may be caught or captured before they move very far down the system and cause injury or damage.

Definition
A Conveyor Belt Stop is any accessory that will limit the movement of or stop the backward festooning motion of the conveyor belt and load caused by a transverse rip or failed splice.

One such accessory actually grabs the belt when the tension is released due to belt failure. Other devices use idlers that only rotate in one direction, which will retard the reverse movement of the belt.

www.conveyorengineering.com (14604)

CEMA Recommendation

- A Belt Stop should be considered if there is a slope section of conveyor where a break in the belt would create a serious safety condition for personnel or a lengthy recovery and difficult repair circumstance.

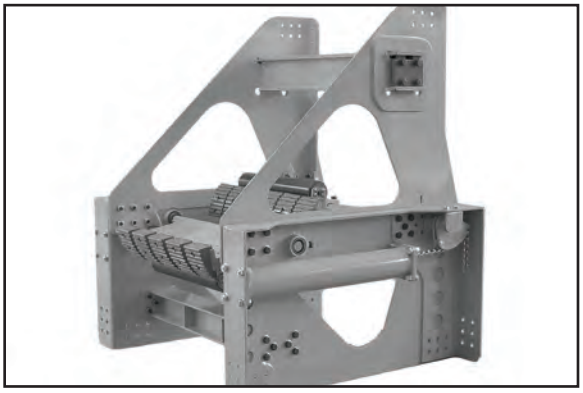

Figure 11.43
Belt stop



Figure 11.44
Belt stop actuated

IMPACT BEDS

Impact beds/cradles are rated according to their structural capacity to absorb the force of impact from a falling lump or stream of bulk solid. There are three simplified ratings based upon the weight of the bulk solid or equivalent mass of homogenous stream multiplied by the height of the fall (W × h).

In most applications the impact energy from a falling single lump is significantly more than that from the homogeneous stream of bulk material so in most applications the weight of the largest lump that can be expected is the critical variable. Table 11.45 gives the impact energy rating ranges for impact bed/cradles. Contact a CEMA member for impact energies over 2000 ft-lbf, as the impact may exceed the impact ratings of most fabric ply belts.

Duty Rating	Description	Impact Energy lbf-ft (N-m)
L	Light Duty	<200 (271)
M	Medium Duty	201 to 1000 (272 to 1356)
H	Heavy Duty	1001 to 2000 (1357 to 2710)
Consult a CEMA Member Company for impact energies > 2000 lbf-ft (2710 N-m)		

Table 11.45
impact bed/cradle duty rating

The CEMA Idler Class for the idlers used in the load zone determines the dimensional class of the impact bed/cradle. The dimensions for the different idler classes can be found in the CEMA Standard for Bulk Material Belt Conveyor Troughing and Return Idlers No. 502, most current revision. The designation for an impact bed/cradle is the duty rating followed by the Idler class. For example a Heavy Duty impact bed/cradle which is dimensionally compatible with CEMA D6 idlers in the load zone shall be designated as H-D6.

WWW.CEMANET.ORG has issued this document (B14) on Apr 14, 2017 to Pattaya Thailand

CEMA Recommendation

- Calculate the impact energies of each transfer point based on CEMA Standard 575-2013 (or most recent version) Bulk Material Belt Conveyor impact bed/cradle – Selection and Dimensions or the latest revision.
- When the impact energy exceeds the rating of the CEMA class of idlers that are to be used on the conveyor an impact cradle should be considered.
- The change in belt tension, ΔT_{ac}, can be significant when replacing idlers with an impact bed and must always be calculated and considered in the conveyor drive requirements.

The duty rating of a CEMA impact bed/cradle is determined by the maximum impact energy that will be created by the falling lump or stream of material. A simplified formula of the weight of the largest lump, W, or the rate of flow, Q, of the material and the vertical height of fall, h, is used to determine the rating. Calculate both quantities and select the larger of the two values for determining the appropriate duty rating. The formulas for calculating the impact energy and selecting the proper duty rating of impact bed are covered in the CEMA Standard 575-2013 and based on the relationship $F_y = \dot{m}(v_0^2 + 2gh)^{1/2}$. See Chapter 6 for power requirements for impact bed/cradles.

$$IE = W \times h$$

Equation 11.46
IE, Impact bed/cradle impact energy

$$W_e = \frac{Q^2}{k}$$

Equation 11.47
W_e, Equivalent weight from homogenous stream impact

Where:

IE	= Impact Energy lbf-ft (N-m)
h	= Vertical drop distance of single lump or homogenous stream of bulk material
k	= Spring constant of the impact bed/cradle lbf/ft (N/m)
Q	= Flow rate of the homogenous stream of bulk material tph (mtph)
W	= Weight of a single lump lbf (N)
W_e	= Equivalent weight of a homogenous stream of bulk material lbf (N)

WWW.CEMANET.ORG has issued this document (14604) on Apr 24, 2017 to Pattaraporn Sukkeaw (suaveeg@...., Thailand).

Q = 2,500 tph (2268mtph) 8-inch (200 mm) minus ore 120 lbf/ft^3 (1,922 kgf/m^3)
h = 12.0 ft (3.7 m) k = 5,833 lbf/in CEMA D6 idlers used

$\therefore$ Largest lump could equal a slab 3 x nominal size: $\frac{8\text{ in} \times 8\text{ in} \times 24\text{ in}}{1728\frac{\text{in}^3}{\text{ft}^3}} = 0.89\text{ ft}^3$

$W = 0.89\text{ ft}^3 \times 120\frac{\text{lbf}}{\text{ft}^3} = 106.8\text{ lbf}$

$W_e = \frac{Q^2}{k} = 8.03 \times 10^{-4}\frac{h^2 \times \text{lbf}^2}{t^2 \times s^2} \times \frac{(2500\text{ tph})^2}{5833\text{ lbf-ft}} = 0.86\text{ lbf}$

Impact energy from the homogenous stream, $IE = W_e \times h = 0.86\text{ lbf} \times 12.0\text{ ft} = 10.3\text{ lbf-ft}$

Impact energy from single lump, $IE = W \times h = 106.8\text{ lbf} \times 12.0\text{ ft} = 1282\text{ lbf-ft}$

$\therefore$ Rating based on lump impact 1282 lbf-ft (1739 N-m) or "H-D6" for Heavy Duty & use CEMA D6 idler dimensions

Note: Conversion factors for Equation 11.47 $8.03 \times 10^{-4}\frac{h^2 \text{ x } \text{lbf}^2}{t^2 \text{ x } s^2}$ $(0.1457\frac{h^2 \text{ x } \text{kg}^2}{t^2 \text{ x } s^2})$

Figure 11.48
Example impact bed/cradle rating

Slider Beds

Slider beds are similar in design to impact beds but do not have the built in ability to absorb impact. They are typically used in applications where impact, as defined in CEMA Standard 575-2013 or the latest version, is considered light-duty. There are some applications where the nature of the bulk material and the environment makes the use of impact cradles less desirable than a heavy-duty slider bed. A very common adaptation of the slider bed is for belt edge support to facilitate sealing of the belt at the skirtboard by eliminating belt sag.

Definition
A slider bed is a support under the carrying side of the conveyor belt that is designed to handle the sliding load of the belt and the bulk solid.

CEMA Recommendation

- Contact a CEMA member for a review of your application to see if a slider bed is an appropriate option.
- When using slider beds consider the additional power that may be required.

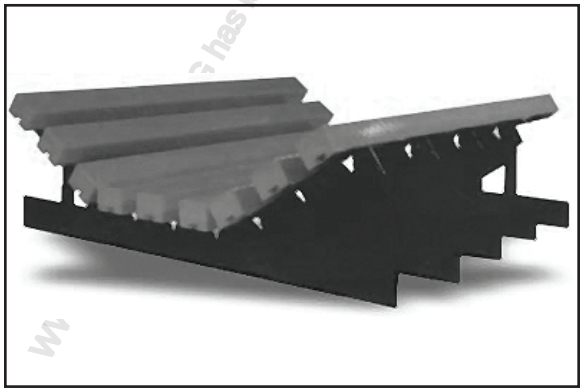

Figure 11.49
Slider bed

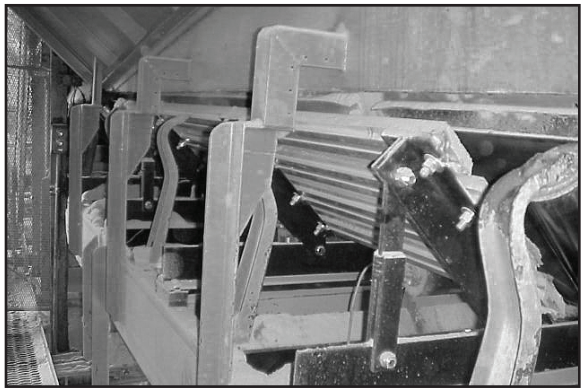

Figure 11.50
Slider bed in use

has issued this document (14604) on 24-2-2017 to Pattarapon Sritakoon, Suchuang, , , Thailand

There are numerous variations of the slider bed used for edge support. Most of the designs utilize a low friction material such as UHMW polyethylene for the belt to slide on. In some cases other materials are used to meet special requirements such as anti static, high speed belts or chemical resistance.
One heavy-duty application for slider beds is in wood yards in debarking and chipping applications. In this application the presence of sharp limbs and the abundance of water make the slider bed a better choice as long as it is heavy duty enough to withstand the impact and the belt is viewed as sacrificial.

The power requirements for full slider beds and for edge support applications differ significantly. The power requirements for full slider beds can be estimated using the method for impact beds described in CEMA Standard 575-2013 or the latest version. When the slider bed technique is applied to edge sealing it is common to use center rollers in combination with the slide surfaces on the edge. In this case the power requirements are dependent more upon the force generated by the sealing system. See Chapter 6 for the calculation of belt tension resulting from the use of edge sealing slider beds.

Combination Impact, Slider and Roller Beds

Manufacturers offer a wide variety of combination of impact and edge sealing systems for specific applications.

Definition
A Combination Bed is a support system under the carrying side of the conveyor belt that is designed to handle the sliding load of the belt and the impact of the bulk solid.

CEMA Recommendation

- Contact a CEMA member for a review of your application to see if a combination system is an appropriate option
- When using slider beds consider the additional power that may be required.

BELT TRAINING DEVICES

The design of the conveyor system allows for a nominal amount of belt wander during normal operation. Spillage or damage to the belt and conveyor structure can occur if the belt moves off center and beyond the design limit. The tracking of the conveyor belt is critical and maintaining proper belt alignment should receive substantial attention during the design of a system as well as during operation and preventative maintenance. Proper alignment of the conveyor components is critical. Center loading of the belt is also critical to belt tracking and this is discussed in detail in Chapter 12.

Many different forces act on the conveyor belt during its operation making the passive tracking of the conveyor through design or by gravity alone almost impossible. The two biggest factors are off-center loading of the belt and miss-alignment of the pulleys and idlers. In many designs once the conveyor belt moves too far off center the belt cannot return to a normal operation position because various components of the system, such as the edge seal, may prevent it from self-correcting. In addition to the structural or mechanical factors that cause mistracking of the belt, build-up on rollers or spillage that gets on the inner surface of the belt create tracking problems. In extreme cases the conveyor belt can flip over turning itself inside out. When the belt is allowed to run against the structure the edges can be damaged so severely that the width of the belt is significantly reduced. In extreme cases the structure can be cut in two by a mistracking belt.

www.ConveyorTraining.net Licensed document (3760-4) on Apr 21 2017 to Patrick Thom Skrekoski (skrekoski@gmail.com) - Printed

Definition
A belt training device is an accessory or system that helps maintain the desired alignment of the conveyor belt.

CEMA Recommendation

- The main rotating components of a conveyor system that are in contact with the belt are to be aligned so that they are aligned horizontally and vertically as well as to the center line of the desired belt travel within the tolerances specified in Appendix D.
- Mark the fixed locations of rotating components that have been purposely misaligned to aid in belt tracking.
- Each one-direction conveyor will have a minimum of one belt training device installed on the return run of the belt prior to the belt entering the tail pulley.
- Each reversing conveyor will have at least one reversing belt training device installed on the return run approximately mid-point between the terminal pulleys.
- Allowance will be made for one return belt trainer for every 50 ft (15 m) of conveyor and one carrying side belt training device for every 50 ft (15 m) of conveyor thereafter or in accordance with the manufacturer's recommended spacing.

There are numerous belt training devices available from CEMA member companies, each one designed for specific applications. They include; Guide Rollers Hold Down Rollers, Return Belt Center Pivot Trainers, Carrying Side Belt Center Pivot Trainers, Biased Idlers, Powered Automatic Belt Training Systems, Inverted V Return Idlers, Crowned Pulleys, Rubber covered rollers and Brute Force Tracking Systems. All of the designs that react to the belt wandering off center utilize the effects of gravity and the friction between the tracking device and the belt to create a correcting force. The stationary or brute force devices that do not react to the belt wander are typically installed as safety devices to force the belt to travel within a fixed window to avoid contact with the structure. Brute force devices should not be used as a substitute for an interactive belt training system.

The technique of "knocking" or purposely miss-aligning idlers to track the belt is common and a certain amount of it is necessary to track any belt due to slight variations in the belt and accumulated tolerances in the conveyor components. However, this practice is often over used and can create an unmanageable situation. Miss-aligned components increase the tension on the belt and therefore the power requirements. A permanent misalignment is a permanent power drain. Secondly if there is no control over which idlers are knocked then there is no way to get the system back in alignment without a complete re-alignment of all components. It is not uncommon to have idlers knocked one direction by one crew and back the other direction by the next crew. It is also common to see belt training devices tied off so that they cannot function. Another common problem is lack of maintenance of the belt training devices. Since most devices work on gravity and friction it is critical that they be free to react to the smallest unbalances if they are to track the belt. These two issues; the over knocking of idlers, the tying off of belt tracking devices are not effective management methods for belt tracking. To track a belt you need to determine the root cause problems and correct them, treating the symptoms does not have a high probability of success and only increases operating costs.

www.CEMAstore.com Purchased document (3rd edition) 4/4/2017 to Patcharin Suwuttikul, Standard, Thailand

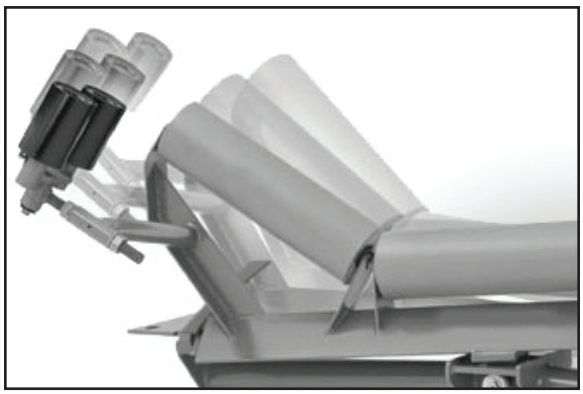

Figure 11.51
Training idler



Figure 11.52
Return run training idler in use



Figure 11.53
Carry run training idler

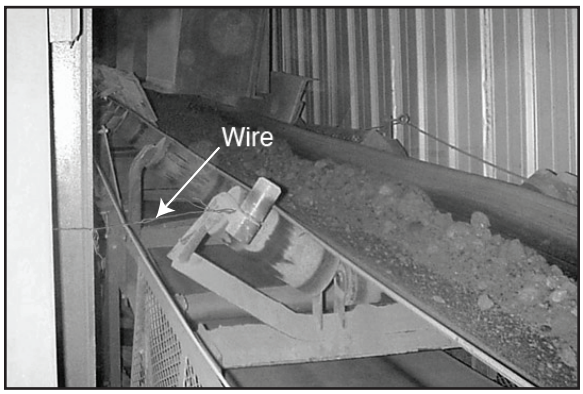

Figure 11.54
Training idler tied off

BELT TURNOVERS

To eliminate the problems caused by a dirty belt in contact with return idlers the belt can be twisted 180 degrees after it passes the discharge point. This brings the clean surface of the belt into contact with the return idler rollers. The belt must be turned back again 180 degrees before it enters the tail section to bring the carrying side of the belt up at the loading point.



Figure 11.55
Belt turnover system



Figure 11.56
Belt turnover

Definition
A Belt Turnover is a system of pulleys and guides that turn the belt 180 degrees so that the clean side of the belt is in contact with the return rollers.

CEMA Recommendation

- Belt Turnovers should be considered on overland conveyors to reduce the amount of carryback material that is dislodged from the belt.
- Belt Turnovers should be considered when both the carrying and return runs are carrying cargo.
- Consult a CEMA member for design help as belt turnovers require specialized engineering to reduce belt buckling and training problems.

Turnovers are generally installed on long belts after the conveyor's takeup system or snub pulley system, and so they generally have plenty of opportunity for carryback to fall from the belt into the conveyor system before the turn-over system inverts the belt. Turnovers are sometime used when the belt system conveys material on the return run. By turning the belt over the carrying side of the belt can be utilized on both the carrying and return runs.

As the twisting of the belt induces abnormal tensions in the carcass of the belt, a CEMA member should be consulted for the proper location of the snub pulleys that turn the belt. (These are shown in Figure 11.52.) The distance required to accomplish the 180-degree turnover of the belt is approximately 12 times the belt width at each end of the belt. Careful attention must be paid to tensions in belt turnovers to prevent buckling of the belt

Belt turnovers do not eliminate the need for a belt cleaning system. The turning system pulleys need to be kept clean. Turning the belt over will often dislodge residual material from the belt. On long overland belts the belt can accumulate significant amounts of material from, static, windblown dust, rain, snow or other operational conditions so a turnover alone will not necessarily solve the carryback problem.

Noise reduction is becoming a design issue on long overland or over water conveyors and special high tolerance idlers are often used to reduce noise. The benefit of these idlers is often negated by even small amounts of carryback that eventually accumulate on the rollers. To minimize the chance of carryback remaining on the belt to be released when the belt is twisted, a conventional belt cleaning system (consisting of a pre-cleaner at minimum) should be installed at the conveyor's discharge and return belt plows should be used.

Because fugitive material is released by the act of twisting the belt, the turnover system may result in getting the "clean" side of the belt dirty. In addition, this scheme can increase abrasive wear on what is usually the belt's thinner undersurface, perhaps leading to the purchase of a new belt or more rugged and more expensive grade of belting.

PULLEY CLEANERS

Materials that will stick to the belt can often transfer and adhere to any snub or bend pulleys that contact the dirty side of the belt. Therefore, pulley-cleaning devices may be as necessary as belt cleaners. Lagging snub pulleys and bend pulleys reduces buildup and wear on expensive pulleys.

Definition
A pulley cleaner is any accessory used to remove material adhering to the surface of a pulley.

CEMA STANDARDS Online issued for comment (Jul 04) on Apr 24, 2017 to Prateraphorn Sirividhayakool, Siam Cement Group, Thailand

CEMA Recommendation

- Every Pulley that comes into contact with the carrying side of the belt and/or is anticipated to have a build up problem shall be equipped with a pulley cleaner.

To clean adhering material from a bend pulley a scraper is typically mounted on the ascending side of the pulley, about 45 degrees below the horizontal center-line. This position allows material scraped from the pulley to fall free. Care must be taken to provide a plow, dribble chute to direct the scraped material to an accessible area where it can safely accumulate for later removal. To clean material from a wrapped pulley a scraper is typically mounted between the belt runs and the removed material ejected from the in running belt by a plow. Care must be taken not to create a safety hazard of material accumulating from or being ejected by plows.

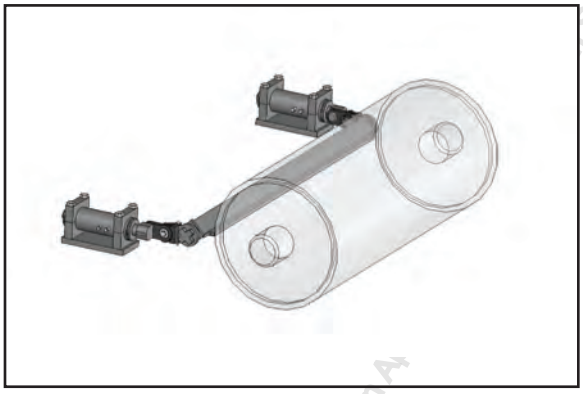

Figure 11.57
Snub pulley cleaner



Figure 11.58
Snub pulley cleaner in use

Most commercially available belt cleaners can be applied as pulley cleaners, consult a CEMA member company for information.

Wing-Type Pulleys

Generally, Wing-Type pulleys treat the symptom of spillage from a poorly designed, operated or maintained conveyor and can be eliminated by proper design operation and maintenance. A Wing-Type Pulley is a cast or fabricated pulley with a discontinuous surface. Between the crossbars are inclined valley-shaped recesses that prevents fine or granular material from being caught between the tail pulley and the return belt. The material gathers in the valley-shaped recesses and falls out of the open ends as the pulley revolves.

Definition

Wing-Type Pulleys are pulleys designed with surfaces or spokes that channel fugitive material to the edge of the conveyor to reduce the build up between the pulley and the belt.

CEMA Recommendation

- Wing-Type Pulleys operate best when the bulk solid is granular and free flowing.
- Unwrapped Wing-Type Pulleys should only be applied at belt speeds under 300 fpm (1.5 m/s) when belt sealing is a concern.
- Maximum recommended belt speed for wrapped Wing-Type Pulleys is 450 fpm (2.3 m/s).

WWW.CEMAWT.ORG Licensed to Document (14604) on A

If a conveyor is likely to spill some of it's cargo on the return belt, the wing pulley is an effective device for removing spillage without belt damage. Wing-Type Pulleys also have been used as vertical gravity takeup pulleys, with the same mitigating effects.

Care must be used when applying a Wing-Type Tail Pulley, because the intermittent, on-again, off-again contact pattern between the "wings" and the belt can impart an up-and-down fluctuation to the belt line. This vibration makes it difficult to effectively seal the loading zone, resulting in additional material spillage. Wing-Type Pulleys can also introduce a pulsating action which can shorten the life of components located nearby. The effective diameter of a Wing-Type Pulley is often smaller than the nominal diameter and this must be taken into consideration when selecting the belt. Wrapping a band of steel in a spiral around the Wing-Type Pulley allows the pulley to provide the self-cleaning benefit without creating oscillation in the belt line or reducing the effective diameter.

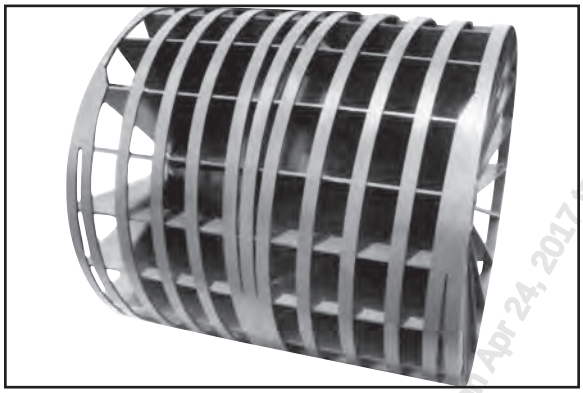

Figure 11.59
Spiral wrapped Wing-Type Pulley

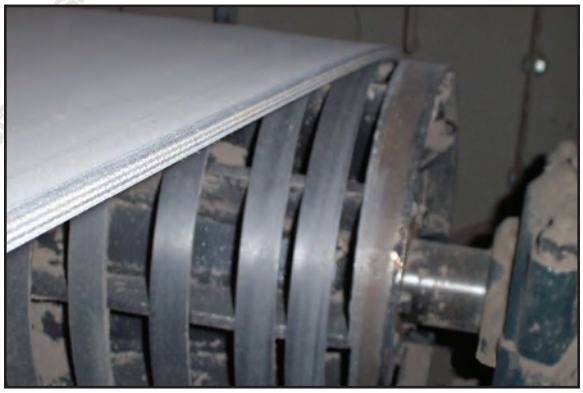

Figure 11.60
Spiral wrapped Wing-Type Pulley in use

DECK PLATES

Deck plates or decking consisting of flat, bent or curved metal sheets installed between the belt's carrying and return runs. These plates act as a shield to deflect any fugitive material. This construction, common to many well-designed belt conveyors, protects the return run of the belt, both from any spilled material and from the weather.

Definition
A deck plate is a barrier between the carrying side of the belt and the return run of the belt used to prevent fugitive material from falling on the return run.

CEMA Recommendation

- Deck plates shall be installed in the load zone and discharge zone of the conveyor and in other areas where the likelihood of spilled material from the belt or falling material from any source can be deposited on the belt is high.
- The use of deck plates in other portions of the conveyor is dependent on the conveyor design and bulk solid being handled. Consult a CEMA member for advice.

Three styles of decking shown in Figures 11.61, 11.62 and 11.63 are used more or less according to the designer's preference and the nature of the supporting structure. Both the round and inclined styles allow material that has landed on the decking to slide off to the outside of the conveyor.

www.CEMANET.ORG has issued this document (14604) on Apr 24, 2017 to Patr... (Contractor) (Standard) ... Thailand

Sometimes decking is applied only at the loading point and forward of it for about the next several feet down the belt line. If this design is used, then a tail protection plow, as described below should also be provided. If decking is used, provisions for periodic cleaning should be considered.

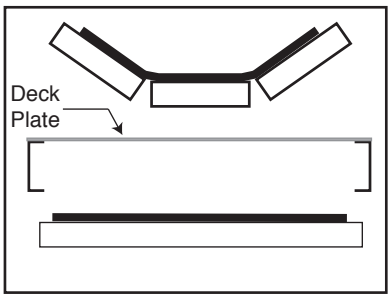

Figure 11.61
Flat decking

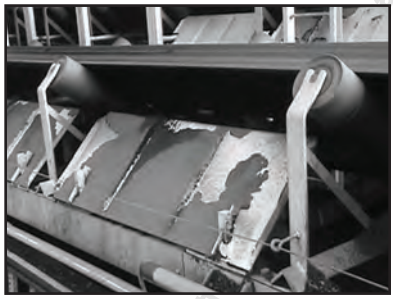

Figure 11.62
Inclined decking

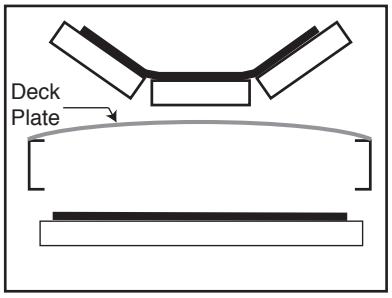

Figure 11.63
Rounded decking

DRIP PANS

Drip pans are sometimes installed below the return run of the conveyor when a conveyor passes over a road or building to catch carryback material that my fall from the belt or the return rollers.

Definition
A drip pan is a shallow trough that is fitted underneath a belt conveyor to prevent carryback or water from falling to the surface below.

CEMA Recommendation

- Drip pans should only be used when there is no other alternative to reducing or eliminating material falling from the belt, return rollers or structure.
- When used it is important to consider the additional weight of the drip pan and the material that can collect in the pan in the design of the structure.
- When used there must be adequate access for cleaning or an automatic method of cleaning supplied.

Drip pans are often made of stainless steel to resist corrosion, have nominal depth of a few inches, typically fit between the conveyor structures and are angled to direct flow to a convenient location for collection of the off fall. Often the pans are flushed with a stream of water to keep them from building up with material. The weight of drip pans and the material that they can hold can be a significant load on the conveyor structure. Properly designed and well-maintained belt cleaning systems can eliminate the need for drip pans.

SPILL PROTECTION

Spill protection is required to protect personnel and equipment where lumps of bulk materials or other hazards such as buildups of frozen material or failed idlers may fall from the conveyor onto walk ways, roadways or buildings. Spill protection is often provided at designated cross under locations and designated work areas when located near or under conveyors.

Definition
Spill protection is a guard designed to catch and hold any materials that may become dislodged or fall off

www.bulkonline.com Downloaded this document (6604) on Apr 24, 2017 to Pattarapon Smitthikrai

an elevated conveyor creating a hazard to personnel or equipment below.
CEMA Recommendation

- Establish designated conveyor walkways, travel ways and crossunder locations.
- Install spill protection at designated walkways, travel ways or work areas under or next to conveyors where falling materials or objects create a safety hazard.

WEATHER PROTECTION

The need to protect belt conveyors from the weather varies with the climate, the material handled, and the type of operation. The material being handled may be affected by rain, or, if the material contains moisture, by freezing temperatures. Rain on the pulley side of the belt or on the drive pulleys may cause slippage between the belt and pulley. Ice and snow on these same surfaces can completely stop a belt conveyor. Significant amounts of precipitation can accumulate in the carrying side troughed profile and in the V of V-return idlers. Also, the life of rubber covers may be shortened by the effect of intense sunlight.

Definition
A weather protection device is an accessory cover or shield that is designed to reduce the effects of weather on the operation of the belt and to protect the cargo from the elements.

CEMA Recommendation

- Weather protection shall be installed whenever the cargo or return run must be protected from the elements.
- Weather protection shall be installed whenever the wind speed is frequently in excess of the speed that will create fugitive material or push the empty belt out of alignment.

Strong winds can lift conveyor belts off their idlers and cause severe belt training problems. On conveyors with narrow belts, and on those handling light materials, it is possible for the wind to lift the belt, spill the load, and cause serious damage to the belt. This is particularly true of tripper belts, where the belt leaves the troughing idlers and rises on a rather long incline to the tripper head pulley. Wind may also create a nuisance by blowing fine materials from the conveyor belt.

When the belt conveyor is not contained with an enclosed gallery (which obviously offers the most complete protection for the conveyor parts and maintenance personnel), one or more of the following belt protections can be used.

Full–Covers

Full-covers usually are semicircular in shape and are made of flat or corrugated sheets, commonly either of galvanized steel or aluminum. They are fastened to the stringers and are situated over the belt. The arrangement and fastening of the covers should permit convenient access to permit servicing the belt and idlers. The belt covers frequently are hinged at one side.

Three-Quarter Covers

As the name implies, these covers are less than a complete semicircle. On the walkway or access side of the belt conveyor, to facilitate inspection, the lower edge of the cover may terminate slightly above the high edge of the troughed belt.

www.CEMANET.org has licensed this document (5604-0) to Apr 4, 2017 Pattarapon Sirikongchuang, , , Thailand



Figure 11.64
Full covers

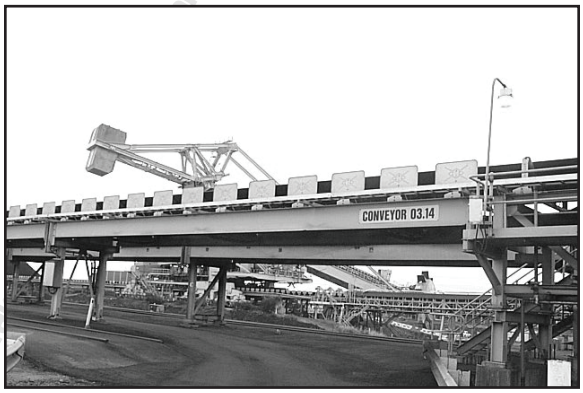

Figure 11.65
Windbreaks on idlers

Windbreaks

Where protection is needed from wind alone, it can be provided by installing a suitably reinforced metal sheet on the windward side of the conveyor stringers. This sheet should extend above and below the stringers to protect both the carrying and return runs of the belt. Idler manufacturers offer windbreak shields that are attached to the idler frames.

Wind Hoops

In some instances, it is necessary only to prevent the empty or lightly loaded belt from being blown off the idlers. This can be accomplished by providing suitable hoops, spaced at regular intervals along the belt conveyor, as shown in Figure 11.62.



Figure 11.66
Wind hoops

In some operations, the conveyor may be shut down for long intervals of time. If the belt is not otherwise protected it can be lashed to the stringers at frequent intervals.

WWW.CEMANET.ORG has issued this [illegible] on Apr 21, 2017 to Pattarapom Sritrakul

MAGNETIC SEPARATORS

In Chapter 8, the use of magnetic pulleys for removing tramp iron is discussed. There are other methods of removing or detecting tramp iron. A magnetic separator for a belt conveyor should be considered for two reasons:

- Purify the material being conveyed to increase its value or increase user satisfaction of the conveyed product.
- Protect machinery such as crushers, grinders, pulverizers and chippers from ferrous tramp metal that may be mixed in with the conveyed material. Removing the tramp metal prevents costly repairs and downtime.

Definition

A magnetic Separator is a device used to remove tramp iron and steel from a conveyor using either an electro or permanent magnet, which is installed above a conveyor to remove foreign metal objects without stopping the conveyor. Only materials which are able to be magnetized can be removed through the use of a magnet.

CEMA Recommendation

- A Magnetic Separator shall be installed at locations in the conveyor system immediately downstream of where tramp metal is likely to be introduced.

There are two methods of construction for magnetic separators: Permanent Magnets and Electric Powered Magnets or Electromagnets. The conveyor application being considered will usually dictate which method of magnetism is to be used.

Separators using permanent magnets are usually considerably less expensive on initial cost, lighter weight, smaller in size and have no operating costs, as the magnet requires no electrical hook-up to energize the magnet.

Electrical powered magnetic separators typically are more powerful, producing stronger and deeper penetrating magnetic fields. This allows them to work through deeper burdens of conveyed material and on faster belt speeds.

The next design consideration is to determine if a self-cleaning magnet is advantageous. The determining factor is usually the amount of tramp metal being removed. If the application is usually clean and the concern is to remove only a few pieces of metal infrequently, the more expensive self-cleaning magnet would not be required. If the volume of tramp metal is nearly continuous, a self-cleaning magnet will be more efficient and less costly in the long run.

Bulk handling belt conveyors typically use three types of separators.

- Magnetic pulley separator
- Suspended magnet separator
- Cross belt separator

www.CEMA.org has issued this document (2550) on April 27, 2017 to Patrarapon Tantekool, Suranaree, Thailand



Figure 11.67
Suspended magnet



Figure 11.68
Cross belt magnet

The magnetic pulley is similar to a standard drum pulley in appearance except the interior of the magnetic pulley contains permanent magnets. In a magnetic pulley application, the conveyed material is transported on the belt and discharged in the normal discharge trajectory. The ferrous tramp metal however is attracted to the pulley by the internal magnets. The tramp metal adheres to the belting around the head pulley. As the belting leaves the pulley face on the bottom of the pulley and return side of the conveyor, the belting leave the magnetic field of the pulley and the ferrous tramp metal simply drops off the belting. A stainless steel or polymer diverter chute can be attached under the magnetic head pulley to control or direct the flow of the removed tramp iron.

It is important that belt cleaners are not used on magnetic pulleys in the primary position because tramp iron can accumulate on the belt cleaner and possibly damage the belt. The secondary position for belt cleaning is preferred when a magnetic pulley is used. The cleaner in the secondary position must be far enough from the pulley so that it does not become magnetized.

The magnetic pulley is a simple, lower cost, continuous, self-cleaning solution. It is usually of the permanent magnet type. In many cases an existing pulley can be replaced with the same size magnetic pulley offering a clean design solution to a separation problem. Standard pulley features such as crown face, compression type hubs and bushings and lagging can be specified. The rubber lagging will significantly lower the strength of the magnetic field generated by a magnetic pulley. Another consideration is that a magnetic pulley can be up to five times heavier than a standard pulley, so an increase in shaft size through the bore of the magnetic pulley should be considered if a replacement pulley is being considered. General guideline limits for magnetic pulleys are burden depths of 6-inch (150 mm) and deeper, and belt speeds of over 350 fpm (1.8 m/s).

The suspended magnet is a magnet box that can be suspended from a frame over the conveyor. Ferrous metals are attracted to the faceplate of the suspended magnet as the material is conveyed in the normal path. The suspended magnet can be either permanent or electric and is available in a wide range of magnetic strengths to fit a specific application. It is not self-cleaning so any ferrous metals picked out of the conveyed material have to be physically removed from the magnet face.

The cross belt separator is suspended above, but angled across or perpendicular to the conveyed material conveyor, hence the name Cross (the) Belt Separator. The cross belt can be either permanent or electric and is available in a wide range of magnetic strengths to fit specific applications. It is a continuous, self-cleaning solution. Tramp ferrous metal in the conveyed material is attracted up to the magnet and

WWW.CEMANET.CR Issued by Metal Detrument (M) on 7/12/2014 to Jirapom Sritrai

attaches to the separator belt. The separator belt is cleated and the cleats aid in moving the ferrous metal away from the magnet and discharging it off to the side of the conveyor. A stainless steel or polymer diverter chute can be utilized to control and direct the flow of the removed tramp iron.

The above design information is to be used as a general guideline. For a specific separator recommendation for a specific application contact the magnetic separator manufacturer direct.

Information usually required by manufacturers to determine a recommended magnet for a specific application include: description of the material being conveyed, including high heat considerations, volume in tons per hour, dampness of the material, burden depth, belt width, belt speed in feet per minute, description of troughing idlers, conveyor incline in degrees at point of magnet installation, type, size and quantity of ferrous metal to be removed and preferred magnet style. This information and the distance you will set the magnet face to the bottom of the conveyed material belt will greatly influence the effectiveness of a magnet.

METAL DETECTORS

Metal detectors are used for many reasons in process where bulk materials are conveyed by belt. Metal detectors are available in a wide range of sensitivities and configurations so that virtually any conveyor design can be equipped. Metal detectors are capable of detecting ferrous and nonferrous metals.

Definition
A metal detector is a device that sense changes in the electromagnetic fields caused the presence of conductive materials.

CEMA Recommendation

- A metal detector should be installed when the presence of unwanted metal in a process will create downtime or degrade the quality of the end product.
- The metal detector should be installed in a location on the conveyor that is convenient for removing the tramp metal from the cargo.

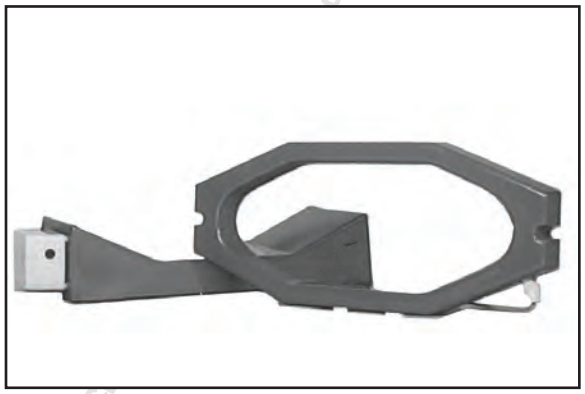

Figure 11.69
Tramp metal detector



Figure 11.70
Metal detector in use

www.CEMA-Online.org document (34604) on Apr 24, 2017 for Pattarapom Simkaew (pattarapom_s@yahoo.com), Thailand

CONVEYOR BELT SCALES

For in-plant process functions, the continuous weighing of a wide variety of bulk materials on a moving conveyor belt is accomplished through the use of belt scales. Three types of scales are manufactured specifically for this purpose: the all-mechanical system, the electronic scale and the nuclear scale.

Definition
Conveyor Belt Scale is a device that produces a signal that is proportional to the belt and cargo weight and can be calibrated to give an accurate rate of bulk solid flow, while the conveyor system is in operation.

CEMA Recommendation

- Locate Conveyor Belt Scales in the conveyor system when it is necessary to know the flow rate of the bulk for process control or for shipping.
- Locate Conveyor Belt Scales at least 10 feet (3 m) from the load zone of the conveyor to prevent the dynamics of loading from interfering with the output and to allow ample space for skirting and dust control.

The first two types operate by weighing the actual material as it passes over a weigh bridge, measuring belt speed, and integrating these measurements into a rate output.



Figure 11.71
Load cell belt scale

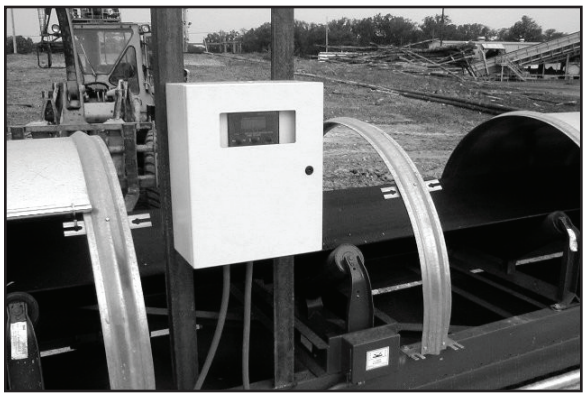

Figure 11.72
Load cell belt scale in use

A nuclear scale measures the relative bulk density of the material on the moving belt and compares this with the known bulk density of the material. A conversion of bulk density to weight is computed and integrated with belt speed to achieve a rate output.

The various manufacturers of belt scales have designed their equipment for compatibility with standard belt conveyor design practices, so the scales are easily adaptable to both existing and newly designed conveyor systems. Scale accuracy is generally considered to be within 1/4 of 1 percent if properly installed and maintained in accordance with the manufacturer's recommendations.

SAMPLING DEVICES

Sampling is a process obtaining a small portion of a material, which is representative of the whole. Samples are taken both to determine acceptable quality and to control operations and inventory. The most accurate method of sampling is to stop the loaded belt, insert a template to fit the curve of the belt, and shovel or sweep of a precalculated quantity of material. This must be done a specific number of

www.CEMAEFORG.issue this doc. 2017 (Pattarapol Intrapool, Suchitang., , Thailand

times, depending upon the size of the lot being sampled. This large sample is then reduced and sent to the laboratory for analysis. Because of the need for continuous operation automated cross cut belt sampling systems are frequently used in bulk material handling systems.

Definition

A belt sampling device is a conveyor accessory that removes a representative portion of the carried material from the conveyor belt.

CEMA Recommendation

- Consult a CEMA member for a recommendation on the sampling system best suited for a particular application.

Cross Belt Sweep Sampling

Figure 11.73 illustrates an automatic cross belt sweep sampling system. An automatic cross belt sampling system uses either air, hydraulic, or electric power to quickly drive a cutter sweep across the loaded path of the belt. A chute directs the material sample removed by the cutter to a collection point. The sample is removed and either brought to a laboratory for analysis, or it may be analyzed by automatic equipment at the sampler and returned to the material stream. The sampling action can be performed manually or at automated specific intervals.

A cross belt sampling allows the conveyor system to continue operating during sampling and provides accurate samples that are comparable to the stopped-belt sampling method. When integrated with an automatic material testing unit, the operator can have continuous, real-time information about the material carried by the belt. This sampling system does not require operator interaction with the conveyor.

The sampling system may be installed anywhere along the length of the conveyor. Depending on the method of actuation, access to air, electric, or hydraulic power is required. In the case of hydraulic or pneumatic power, the power unit can be mounted to the sampling system, requiring only electric power to the sampler.

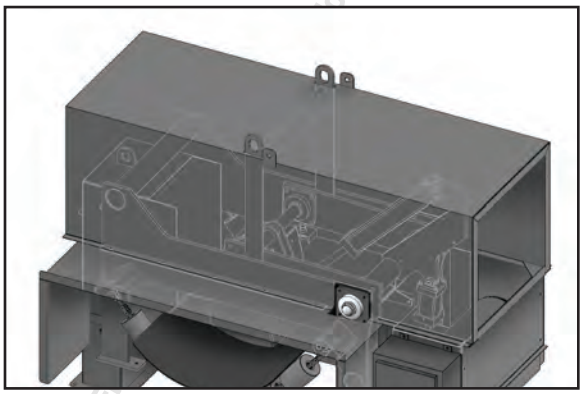

Figure 11.73
Sweep style sampler



Figure 11.74
Sweep style sampler in use

Cross Cut Automatic Sampling Systems

Sweep sampling could prove impractical if sampling is required frequently An acceptable alternative is to cut the stream of material completely at a right angle to the flow of the stream at a suitable discharge

point in the conveying system. Figure 11.76 illustrates a typical cross cut sampling arrangement. A cutter device transverses the stream at a right angle removing a "typical" cross section at the conveyor discharge and parks on the side, completely out of the stream. The cutter is driven across the steam by means of a hydraulic cylinder. The sample is deposited in a chute or on a feeder belt for further processing. Electric motor and pneumatic drives are also sometimes used.

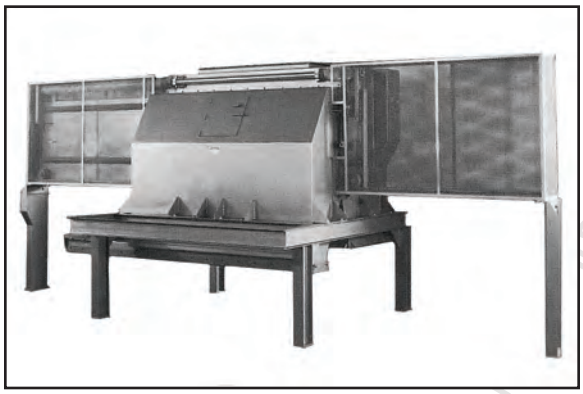

Figure 11.75
Cross cut sampling system

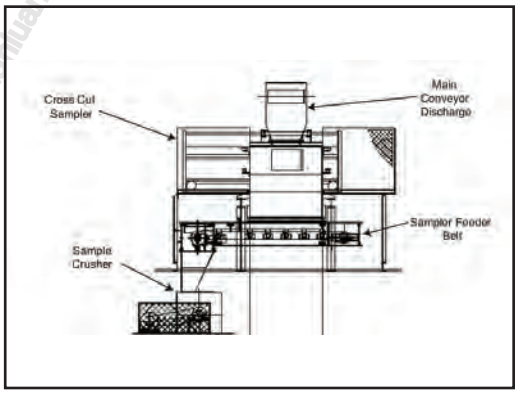

Figure 11.76
Cross cut sample illustration

RIP DETECTION SYSTEMS

Conveyor belts are susceptible to cuts and punctures. Even a small opening through the belt can cause major problems leading to a shutdown of the system. In the worse case a belt can be cut causing a catastrophic failure and major outage.

Definition
A belt tear or rip detector is a conveyor accessory using a switch or sensor which is designed to detect belt damage including tears, rips, and punctures.

CEMA Recommendation

- Place a rip detector on every conveyor where there is the possibility of the bulk solid or tramp metal penetrating the belt and creating a tear in the belt.
- The rip detector is best positioned on the carrying run of the belt immediately after the point where the bulk solid is loaded on the belt.
- On conveyors where the possibility of a rip happening at multiple locations and for a wide variety of reasons consider the use of a specialized belt with a built in rip detection system.

There are a wide variety of rip and tear detectors available. Some are stand-alone accessories and some are an integral part of the belt, depending upon the applications. The theory of operation varies from simple trip wire devices to sophisticated electronic systems. There are several ways that the belt can be penetrated or cut so it is important to select a device that will detect the problem which creates a significant problem. For example if you are conveying a cargo with a high unit value, any hole in the belt will cause loss of a valuable amount of product. In this case you may want to know the belt has been penetrated, whether or not that event ends up ripping or cutting the belt. In other applications like crushing aggregate, sharp fragments routinely puncture holes in the belt. In this application it is such a common occurrence that looking for and repairing these holes is high on the preventive maintenance program priority list. In this case it is more important to detect a major rip than a small hole.

WWW.CEMANET.ORG has issued this document (1AB1A0) on April 24, 2017 to [illegible] Sritrakool, Suanluang, , Thailand

ELECTRICAL CONVEYOR ACCESSORIES

As the remote control of conveyors becomes more common there has been a proliferation of electrical conveyor accessories used for a wide number of purposes such as data collection, safety and automatic control.

Definition
Electrical Conveyor Accessories are electrically operated devices that are not directly required for the normal starting and stopping of a conveyor.

CEMA Recommendation

- Consider electrical accessories as an integral part of the conveyor information and control systems and plan for the necessary communication of their status to the appropriate location or the central control room.

Pre-Start Alarms

Pre-start alarms are required by regulations on most conveyors. They are commonly a horn, siren, buzzer, strobe or a flashing light.

Definition
Pre-Start Alarms: a conveyor accessory which provides an audible or visual device used to alert personnel working on (or near) a conveyor that it is about to start.

CEMA Recommendation

- Install pre-start alarms where required by government regulations or wherever people routinely work around unguarded conveyors that are remotely controlled.
- Install alarms along the conveyor in sufficient number that the alarm is audible or visible from all locations along the conveyor.
- The warning period should be as long or that required by the local regulations.

Pull Cord Switches

Because conveyors have numerous pinch points along their length it is necessary to have an emergency stop system that can be activated at any place along the conveyor.

Definition
A pullcord switch is an emergency stop switch with latching provisions that can be activated by pulling on a cord, causing the conveyor drive to stop.

CEMA Recommendation

- All conveyors should be equipped with an emergency stop system that cannot be reset locally to restart the conveyor.
- Pullcord switches should be tested monthly to make sure the electrical and mechanical components are functioning properly.

www.CEMANET.ORG has issued this document (4400) on Apr 27, 2017 to Pattarapom Sriraapol, Suanlang, , , Thailand

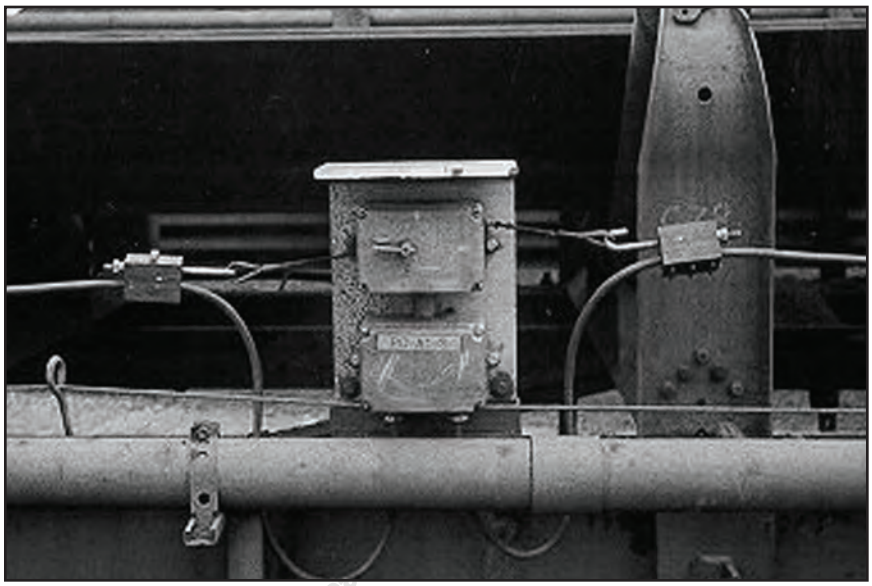

Figure 11.77
Pull Cord Switch

Pullcord switches are the common method of providing emergency stop capabilities along a conveyor. They are normally provided at intervals on both sides of the conveyor and connected with a colored pull cord wire. Pull cords should be extended around the tail and head pulleys areas or wherever hazards exist. Some thought must be given to the best location as pull wires located in an area of frequent spillage are a common source of false trips of conveyor systems.

Blocked Chute Detectors

Chutes are often bottlenecks in the flow of bulk solids through conveyor systems. When a chute becomes plugged it can cause damage to the chute and the belt and interrupt production. Removing chute blockages is often a difficult and time consuming task.

Definition
A blocked chute detector or plug switch is a conveyor accessory incorporating a switch or sensor that is designed to detect the impedance of material flowing from the discharge of a conveyor.

CEMA Recommendation

- Every transfer chute that is part of the main flow of material path should be equipped with a blocked chute detector that will trip the conveyor drive when activated but does not allow restarting the conveyor by resetting the blocked chute detector alone.

Chute Level Switches

There are many requirements in conveyor systems for providing a method to accommodate surge loads. Often chutes or hoppers are used for this purpose and the amount of material in the chute or hopper can be detected using chute level switches.

Definition
A chute level switch is a level indicating device usually located in a chute or hopper to detect an abnormal level of material, thus activating a predetermined control function.

www.BOOKMANET Rights Issued this Document 1460 on Apr 4 2017 to Pu

CEMA Recommendation

- Consult a CEMA Member during the design of the system for a recommendation on the most appropriate chute level switches for your application.

Chute level switches can be an integral part of the conveyor control system so it is critical to select the appropriate model and locate it in the best location. Chute level switches are susceptible to build up preventing them from operating.

Misalignment Switches

The conveying of bulk solids is a dynamic process and the belt is in a constant state of seeking the path of balanced forces. Because the forces created by the flowing bulk solid can be so persuasive the belt is often forced out of the desired path. Therefore some method of detecting when the belt has traveled too far off the desired path is needed.

Definition

A misalignment switch is an accessory positioned along the length of a conveyor to detect and signal a misalignment condition of the belt.

CEMA Recommendation

- Locate misalignment switches on both sides of the belt at the exit of the load zone and the entrance to the discharge chute.
- The allowable travel before the misalignment switch sends a stop signal should be no more than 2 inches (50 mm) or 1/12th the belt width whichever is less.
- Additional misalignment switches may be added in places where alignment of the belt is critical.

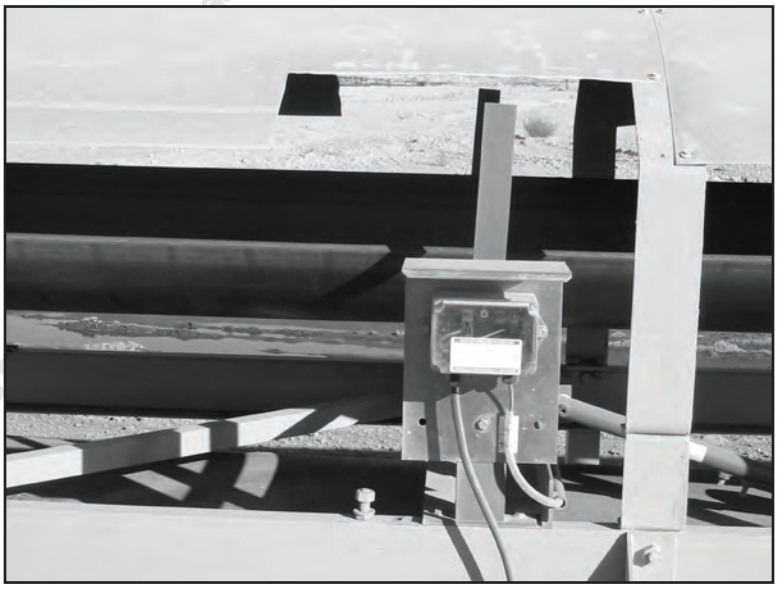

Figure 11.78
Belt Misalignment Switch

Alignment of the belt, particularly at the loading and discharging points, is critical to the proper operation of a conveyor to minimize spillage. If the misalignment switch is set to allow too much side to side travel the belt can move out from under the skirt seals in the load zone and cause large amounts of spillage or

WWW.CEMANET.ORG licensed to Apr 24, 2017 to Paparapom Sirakorn, Suanluang, Thailand

even cause the belt to roll over on itself. At the discharge, spillage can build up on the head pulley and travel back on the return of the belt. Misalignment on the return run often results in belt edge damage and structural damage when the belt edges, embedded with abrasive fines, cut through structural members.

Misalignment switches are often the source of false trips and are therefore often disabled by plant personnel. False trips are most often due from spillage due to over-loading or off center loading striking the activating lever. The use of belt training devices along with preventive maintenance of the electrical controls is the best way to insure that misalignment switches serve their function as the last line of defense for a mistracking belt. Many misalignment switches have multiple trip points to indicate the degree of misalignment.

Zero Speed Switches

When a main rotating component of a conveyor system stops rotating but the belt continues to run there is potential for serious belt damage and possibly fire. For that reason critical rotating components are often fitted with switches which detect rotation.

Definition

A zero speed switch is a conveyor accessory using a switch or sensor designed to detect the presence or absence of movement of the conveyor belt or, a switch that is connected to some rotating member of a conveyor to cut off power to the conveyor or interconnected machinery if the conveyor speed falls below a predetermined minimum.

CEMA Recommendation

- Place a zero speed switch on every non-powered fixed major pulley in a conveyor system. Major pulleys would include terminal pulleys and bend pulleys.

Zero speed switches can be very helpful in signaling problems with the belt as well as the primary rotating components of a belt conveyor. While the primary purpose is to signal when a critical pulley is not rotating the combined signals can also alert the control room to belt slippage and even belt breaks. When the belt starts to slip on a pulley that cannot rotate properly there is a significant amount of heat built up in a very short period of time. This can damage pulley lagging, the belt or even start a fire. When a belt breaks in two some pulleys may continue to rotate while others stop. While there is little time to react to a broken belt there are other actions that can be taken, such as shutting down supply belts to minimize the problem.

WWW.CEMANET.ORG has licensed this document (2164) on Apr 24, 2017 to Pattaraporn Sritrakool, Siam Kubota Co., Ltd., Thailand

ACCESSORY POWER REQUIREMENTS

Chapter 6 includes in the power equation the tension, T_{ac}, resulting from the application of accessories in belt conveyor systems. The tension from accessories is cumulative, that is the tension from each accessory is calculated and added together to arrive at a value for T_{ac}. For most accessories determining the force due to the weight or the force that the accessory exerts against the belt and multiplying that by the estimated coefficient of friction is used to calculate the tension added to the system. Determining the coefficient of friction can be difficult because of the widely varying materials of accessory construction, belt construction, belt condition and the properties of the bulk solid. Caution is advised in accepting handbook values for coefficients of friction as they are often stated for friction against polished steel or other hard and slick surfaces. Conveyor accessories have to operate against rubber belts and often with sticky bulk solids so the coefficient of friction can be several times handbook values. The static coefficient of friction, that has to be overcome for startup, is often 1/3 more than the sliding or running coefficient of friction.

Static Coefficient of Friction against a 60 A Rubber Belt Cover	
Accessory Material	**Dry**
316 Stainless Steel	0.64
Rubber 40 A	0.62
Rubber 60 A	0.73
Tool Steel	0.86
Tungsten Carbide	0.62
UHMW PE	0.56
Urethane 50 D	0.60
Urethane 80 A	0.70
Urethane 90 A	0.67

Table 11.79
Coefficients of friction for typical accessory materials

For new conveyors the estimates for accessory power requirements are almost always conservative resulting in adequate estimates of total conveyor power requirements. Problems can arise on retrofitting accessories on existing conveyors if the added tension is not taken into account. It is recommended that the conveyor drive unit amperage be measured before and after the retrofitting of any accessory.

WWW.CEMANET.ORG has issued this document (ID: [illegible]) on June 24, 2017 to Purchased from SMaterial Solutions, Limited

THE IMPORTANCE OF MAINTENANCE

Often, you get out of a conveyor belt accessory what you are prepared to put into it. If you install an accessory and never look at it again, its performance will deteriorate over time. If inspection, adjustment, and maintenance are provided on a timely basis, performance will continue to match original standards. The single biggest problem with accessories is the tendency to delay their routine maintenance, which often renders the accessory useless. The second biggest problem with accessories is the tendency to make quick fixes to the system by bypassing the accessory and not determining and correcting the root cause of the problem. To maximize the performance of accessories it is often advisable to use specialized maintenance services from the manufacture or dedicate and train specific personnel to properly inspect and maintain them.

Accessories are often maintenance intensive because of the conditions they must work in and the fact that many components are designed for sacrificial wear with use. Proper maintenance will reduce premature wear, prevent damage, and ensure efficient action. When recommended planned maintenance intervals are followed the accessory will perform within the specified performance limits. If maintenance is unplanned and reactive (wait until it breaks) the performance will be out of specification most of the time. In some cases maintenance personnel will over compensate for the lack of maintenance by over adjustment, which often results in accelerated wear or failure of the accessory or belt.

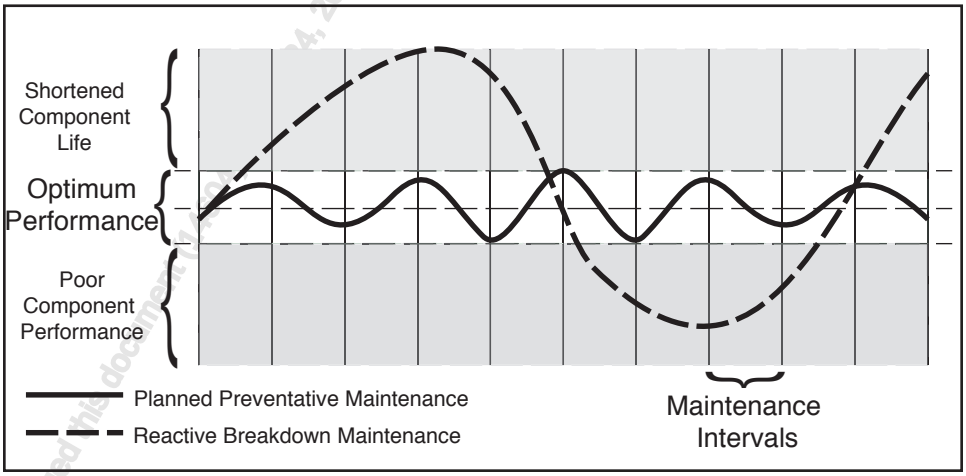

Figure 11.80
Scheduled maintenance vs. accessory performance

Maintenance requirements should be reviewed when an accessory system is specified. Some manufacturers are designing their equipment to allow easy maintenance. In addition, it is important that as the conveyor is designed and installed to provide sufficient access and clearance to allow the required maintenance activities.

www.CEMATRONG has issued this document to [illegible] 4, 2017 to Vikrant Chhakkol, Syntal Pvt. Ltd.

WWW.CEMANET.ORG has issued this document (14600) on Apr 24, 2017 to Pattarapom Sritrakool, Suanluang,, , Thailand

This Page Left Intentionally Blank

Introduction Pg 483
System Design Pg 484
- Basics
- Loading the Belt
- Capacity Considerations
- Vertical Distance Between Belts (Belt Separation)

Flow Surfaces Pg 487
- Valley Angles
- Width of Lower Chutes (Spoons)

Controlled Flow Transfers Pg 488
Addressing Impact Pg 489
- By Material Flow Control
- By Impact Idlers and Grizzlies
- By Short “Impact” Conveyors
- By Rock Boxes or Stone Box Chutes

Control of Fugitive Material Pg 492
- Introduction
- Regulatory Limits and The Environment
- Methods to Control Dust and Spillage
- Control of Air Movement
  - Displaced Air
  - Induced Air
  - Generated Air
- Dust Control
  - Dust Suppression
- Dust Collection
  - Active Dust Collection Systems
- Explosion Protection
- Passive Dust Control
- Dust Suppression and Collection Conclusion

Controlled Flow Chutes Pg 510

WWW.CEMANET.ORG has issued this document (1400 on Apr 12 2017) to Nutthaporn Sriakool, Sriracha, , , Thailand

Skirtboards Pg 512
- Spacing of Skirtboards
- Length of Skirtboard Extension Beyond Load Zone
- Height of Skirtboards
- Skirtboard Covers
- Skirtboard for Intermediate Load Points
- Skirtboard Clearance Over the Belt
- Skirtboard Sealing Strips
- Friction Against Skirtboards

Wear Liners Pg 519
- Alumina Tiles
- AR Plate
- Carbon Steel
- Clad Plate
- Corrosion Resistant Stainless Steel (12% Chromium)
- High Cr Cast Iron Tiles/Ni-Cr Tiles
- Mild Steel
- Polyurethane
- Quarry Tiles
- Rubber/Synthetic Rubber
- Stainless Steel
- UHMW
- Vitrified Tiles

Dribble Chutes Pg 523

Other Discharge Chutes Pg 523
- Discharge Over the End Pulleys
- Lowering Chutes
  - Spiral Loading Chutes
  - Bin Lowering Chutes
  - Rock Ladders
  - Telescopic Chutes

WWW.CEMANET.ORG has issued this document (1429) on Apr 24, 2017 to Pattarapom Sritrakool, Siam Cement Group., , Thailand

Feeders Pg 526
- Screw Feeders
- Drag-Scraper Feeders (Bar Drag Feeders)
- Apron Feeders
- Reciprocating Plate Feeders
- Vibratory Feeders
- Rotary-Vane Feeders (Pocket Feeders)
- Rotary-Drum Feeders
- Rotary-Table Feeders (Disk Feeders)
- Traveling Rotary-Plow Feeders

Belt Feeders Pg 530
- Application Range
- Construction
- Maintenance
- Belt Cleaning and Sealing
- Flow Aid Devices
- Disadvantages of Belt Feeders

Belt Feeder Design
- Capacity
- Belt Width, Trough Angle and Loading Direction
- Feeder Outlet Dimensions
- Feeder Loads
- Vertical Load and Material Shearing Resistance
- Skirtboard Resistance
- Limiting Conditions
- Feeder Power Requirements

Trippers Pg 542
- Tripper Discharge Through Auxiliary Arrangements
  - Tripper with Reversible Cross Belt
  - Tripper with Two Transverse Stacker Belts
  - Tripper with Reversible Shuttle Belt
  - Tripper with Batwing Chutes

Discharge Plows Pg 543
- Plows Discharging to One Side
- Single Horizontal Swing Plow
- Single Lift Plow
- Horizontal V-Plow
- Vertical V-Plow
- Traveling V-Plow

WWW.CEMANET.ORG has issued this document (DK1400-01-AQ-2) 2019-10 Pattarapom Sriwarom, Siam Cement, Saraburi, , Thailand

Discharge Trajectories Pg 545
Calculating and Plotting Normal Material Trajectories
Center of Mass
Velocities
Start of Trajectory
Load Shape
Horizontal, Inclined, and Declined Conveyor Belt Trajectories
Angular Tangent Direction
Fundamental Force-Velocity Relationships
Belt Trajectory Nomenclature
Horizontal Belt Conveyor Trajectories
Inclined Belt Conveyor Trajectories
Declined Belt Conveyor Trajectories
Plotting The Trajectory Pg 560
Determination of Angular Position of Tangent Line
Distance of Material Fall from Tangent Line
Measurement of the Time Interval
Limits of the Trajectory Path
Special Condition
Examples of Trajectories Pg 563

WWW.CEMANET.ORG has issued this document to Apr 24 2017 Chulalongkorn Department Bangkok, Thailand

INTRODUCTION

The successful operation of any belt conveyor system requires: first, that the conveyor belt be loaded properly; second, that the material carried by the belt be discharged properly. This transfer of material from a belt to another belt, bin or stockpile to a belt, occurs at a transfer point, the design of which requires careful study.

Historically, conveyor system design engineering has focused on the structural and mechanical components within the system. Transfer system detailed design has largely been in the domain of draftsmen, working within predetermined constraints such as vertical and horizontal distance between belts and their angle of intersection. Given that commodity prices are determined by global economic factors, there is an ever-increasing need to remain competitive. Operators of conveyor systems are increasingly focusing on areas of the conveyor where efficiencies and cost reductions can be achieved, in conjunction with a need to comply with increasingly stringent environmental requirements. If appropriate consideration is given to its design, the transfer point is one element of the system where significant benefits in both of these areas can be realized. As a result the entire subject of transfer chute design has progressed in recent years as improved understanding of flow characteristics and better modeling techniques have been developed.

More stringent environmental regulations are forcing many material-handling plants to substantially reduce dust emissions. Because of this, users and designers are looking at the options available to them to meet the new codes at least cost. Many facilities have realized that by improving the transfer of material between conveyor belts, the amount of dust (both visible and respirable) can be reduced significantly, making the entire facility and operation healthier for employees and the public at large.

The most simple transfer point is a fixed one-to-one transfer, where one feed belt loads onto one receiving belt. The simplest is an in-line transfer, where both belts are traveling in the same direction. There are also many one-on-one transfers where the belts are oriented at an angle to one another and, though this is more complicated than the in-line transfer, it is still relatively simple from a designer's point of view.

The difficulties increase when there are multiple feed and receiving belts at one transfer point. In many instances there may be one feed belt feeding two (2) or three (3) or more receiving belts and then actuation of the upper chute may be required or the addition of an actuated "flop gate" or "bucket diverter" to direct material into the appropriate chutes below. The preferred operation may also require split loading onto several belts simultaneously, or switching between belts while the system is in operation ("online splitting" and "online switching"). When this is the case then a traditional "flop gate" cannot be used and a "bucket diverter" is a better solution. There are also transfer points that involve pivoting feed or receiving belts, such as is the case with stacker booms, ship loader booms, reclaimers etc. In these cases, the designer needs to analyze all ranges of slew angle (horizontal rotation) and luff angle (vertical rotation) to ensure that the belt is loaded properly under all conditions. The special considerations needed for the design of these more complex transfer points cannot be addressed in this Chapter. Please consult a CEMA Member company for more information.

www.CEMAonline.com (This document is the property of CEMA and is issued to Patcharaporn Tamrongsak, Suphanburi, , Thailand)

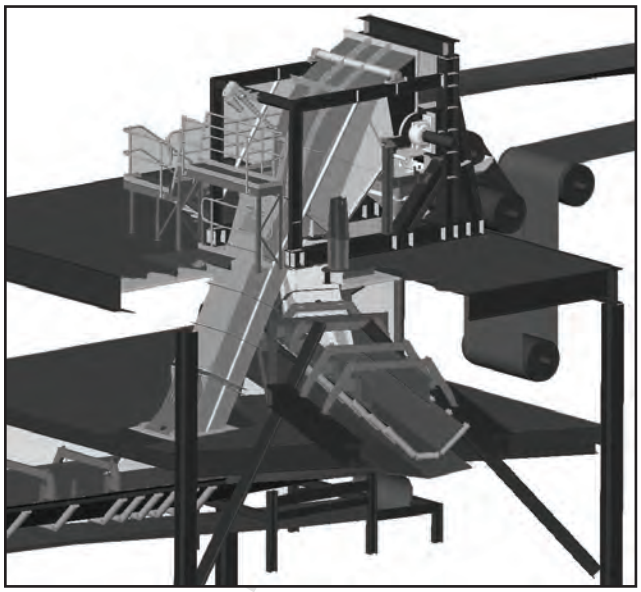

Figure 12.1
Complicated transfer with split load capability

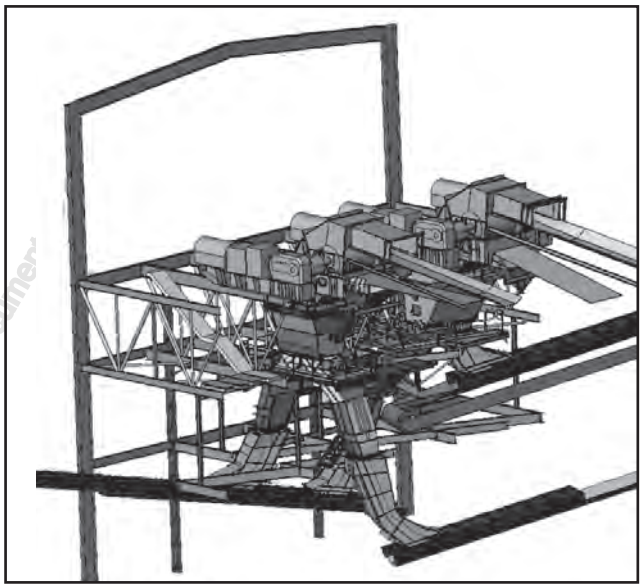

Figure 12.2
Complex dual conveyor transfer with by-pass circuits

www.WANET.ORG has issued this docume

SYSTEM DESIGN

Basics

Transfer chutes should be designed to perform the following functions:

- Collect the maximum throughput of material discharging from the feed conveyor or plant equipment (such as a crusher or feeder).
- Contain and direct the material flow.
- Control the flow path to minimize impact, wear, spillage, dust generation and product degradation.

- Ensure the material is discharged centrally in the direction of travel of the receiving conveyor at a similar belt speed and make allowances for material already on the receiving belt.
- Ensure the material does not block inside the chute but flows continuously.
- Ensure that the load zone on the receiving belt is in an area that is fully troughed, rather than in a transition zone.
- Collect and return belt scrapings to the main material flow.
- Keep the air velocity as low as possible to mitigate any dust generation.
- Accommodate all normal operating events, including fully or partially loaded starts and stops.

The data needed to design a transfer chute varies from application to application but includes:

- Information on the material(s) to be handled; lump size, fines distribution, moisture content, bulk density, surcharge angle, adhesion characteristics etc. It is recommended that several different samples of the material be acquired (varying moisture content, large lump samples compared with fines etc) and the flow characteristics measured to ensure accuracy in the design calculations.
- Capacity requirements and speed data for both belts.
- Conveyor belt orientation, vertical distance between belts and horizontal offset, transition distances, belt, pulley and idler data.
- Determination of method to be used to reduce impact, i.e. short impact conveyor, rock boxes or proper chute configuration so that there is no bulk material impact to begin with.
- Selection of chute lining materials.
- Installation issues which can be significant particularly for retrofit work: careful evaluation is required of existing piping, electrical conduits, nearby structures, dust collection pick-ups as well as the access available to lift chute components in and out.
- Customer preference for control devices, access doors, belt cleaners, water sprays, sealing and skirting systems.

After design of the chute geometry, the loads applied to the support structures need to be analyzed. Support members and the chute work itself may need to be stiffened to allow for both the system in operation as well as the excess loads imposed due to a fully blocked chute condition or spills. The existing structure must be able to meet current structural design codes under worst-case static and dynamic load conditions. Note that structural design codes are updated periodically and when replacing an existing transfer, modifications to associated structural steelwork may be required to ensure compliance with prevailing structural design codes.

Keeping in mind that the primary function of a transfer system is to redirect material efficiently under all expected operational conditions, it is important that these conditions are clearly identified and form part of the initial design criteria.

Substantial disruption to production may result from failure of the transfer system to perform its primary function, as well as damage or injury to associated equipment or people in the immediate vicinity. Where appropriate this risk can be minimized by providing a protective device. A protective device may include automated control systems, chute full detection equipment, guarding of hazards on the transfer system such as nip points or warning signs, etc.

A well designed chute accommodates all operational requirements, addresses all relevant design criteria, and incorporates appropriate protective devices for the application. It delivers a smooth centralized flow of the discharged material. It avoids abrupt changes of direction to minimize material degradation, wear, noise, and dust generation. In applications where combustible material is being transferred, horizontal surfaces where material can accumulate are avoided to minimize the risk of fire or explosion. Even in the

www.CEMAT.ORG Issued to Document (11604) on Apr 14 2017 by Pattaraporn Sirikongkuan (NA) , Thailand

best of deigns compromises are necessary so no transfer point is likely to perform flawlessly for all bulk materials or operating conditions.

Loading the Belt

While the loading of material onto a belt conveyor involves many considerations, of prime importance is the placing of the material centrally on the belt in such a manner that the material velocity in the direction of belt travel is, as nearly as possible, equal to the velocity of the belt itself. When this condition exists:

- Belt cover wear is minimized.
- The potential for damage to the belt by foreign objects is substantially reduced.
- There is a saving in power consumption otherwise required to accelerate the material to the receiving belt velocity.
- The material takes a central and symmetrical profile on the receiving conveyor minimizing potential for conveyor tracking problems. Tracking problems caused by off-center loading often result in spillage and subsequent clean-up costs, as well as resulting in belt edge damage in extreme situations.
- Material displacement and turbulence is minimized, reducing or negating direct contact with skirting and associated wear.
- Material degradation is reduced. This is particularly relevant to plants where the cost to treat and recover fine particles ("fines recovery") is substantial.
- Dust generation is substantially reduced.

It is important that the belt be stable for loading. The placement of material on the belt should not be done while the belt is in the transition zone (from flat to troughed). Whenever possible loading of an inclined belt should be done at 5 degrees or less to reduce receiving belt wear and turbulence caused as material accelerates. Loading at an incline greater than 5 degrees can create spillage as the turbulent bulk material is in a loose bulk density state which temporarily reduces the capacity of the receiving belt until the loaded material stabilizes. If the proximity of the tail pulley to the loading zone prevents the completion of troughing, it may be possible to partially trough the belt (for example, to 20 degrees) before material loading, and then complete the troughing (to 35 degrees or 45 degrees) outside the load zone. However, wherever possible the load zone should be placed on the fully troughed belt.

Capacity Considerations

It is necessary that the transfer chute designer address each of the following conditions:

- Designing the transfer to accommodate the maximum operating tonnage, or in the absence of this information, designing to accommodate nominal belt capacity.
- Designing the transfer to accommodate nominal surge capacity.
- Designing the transfer to accommodate "fully loaded start" events.
- Designing the transfer to accommodate "fully loaded stop" events.

In some cases where feed and receiving belt differential stopping times are significantly different, it may result in the transfer systems volumetric capacity not being sufficient to accommodate all material in the event of an emergency stop. In this situation it is important to design the system to minimize spillage or introduce a secondary discharge flow-path. An extreme example of an existing situation is a high-speed 8 miles (12.8 km) long overland conveyor, which loads a short yard belt. The longer conveyor takes over 2 minutes to stop and material continues to discharge into the transfer system which loads the shorter conveyor, which stops within 20 seconds. In this case a fully loaded stop bypass system has been introduced

Downloaded from www.EngineeringBooksPDF.com by Apr 24, 2017 to Rajabhat Rajanagarindra Sirindhorn Thai Suan Sakol, Suan Sakol, Thailand

which automatically discharges the excess material beside the transfer point. This temporary "stockpile" is then recovered and reloaded onto the yard belt.

Vertical Distance Between Belts (Belt Separation)

The available space allowed for a transfer point should be assessed in detail at the conceptual design stage. Traditionally plant equipment layout, conveyor locations, transfer towers and building code height restrictions have been the driving criteria and the transfer point design itself was treated as an afterthought. This means that there is often not enough fall height for the belt separation or adequate access required for a well designed and serviceable transfer.

It is recommended that the feed conveyor not be elevated more than the minimum height necessary for a satisfactory transfer. This translates into less power being needed to lift the material on the feed belt. Consequently, if careful design of the entire system is not carried out, any additional power absorbed due to excessive transfer height could be dissipated as impact, abrasion, degradation, noise and dust generation. The amount of belt separation required is also dependent on the horizontal offset of the conveyors, when the orientation is not in-line. The further the horizontal distance between discharge pulley and load zone, the greater the vertical separation required.

Controlled flow chutes utilize gravity to accelerate the material to approximately the same speed as the receiving belt. Consequently there is a minimum fall height required based on the receiving belt speed and the chute geometry for controlled flow chutes to work properly.

When designing a new plant layout, it is recommended that a CEMA Member be contacted to ensure there is adequate distance between planned conveyor locations to allow for a correctly designed transfer chute.

FLOW SURFACES

When the desired bulk material flows are outside of the shortest open gravity flow path downward (its trajectory) then the bulk material must slide on the chute work or on itself. Therefore bulk material will usually need to be guided between the entry and exit points of a transfer or chute. Chutes are commonly used to enclose the material stream and define a continuous flow path. The chute path must be configured to provide steep enough downward angles to overcome the sliding friction resistance on the chute wall or on itself so that stagnant flow does not close off the chute cross section. Wall friction coefficients or the angle of repose, with an added safety margin of 5-10 degrees are sufficient for dry, free flowing material chutes. Cohesive or time sensitive materials usually require steeper and larger chutes or flow aid devices due to the additional adhesive strength they develop.

Valley Angles

When designing a transfer chute, a critical angle to consider is the "valley angle". This is the intersection angle between the back plate and side plates and becomes the effective angle for material to slide. This angle (to horizontal) is less than the angle of either the back plate or side plates and must be steep enough to ensure the material flows freely and does not build up in the corners.

$$\cot(\alpha) = \sqrt{\cot^2(\beta) + \cot^2(\gamma)}$$

Equation 12.3

α, Chute or hopper valley angle to horizontal

www.HEAVY.ORG (Document #4604) on Aug 24, 2020 Password Shared, Stanford University

Where:

α = Valley angle (to horizontal)
β = Back plate angle (to horizontal)
γ = Side plate angle (to horizontal)

For Example: If the back plate β is 50° to horizontal and side plate γ is 42°, then α= 36°. For plates at less than 90° the valley angle is reduced and therefore acute angles of back plates and side plates should be avoided. The optimum situation is when there is no valley angle, since the intersection of back plate to side plate is at 90° and the corner radiused, but this can rarely be accomplished in chute design considering all the other constraints.

Width of Lower Chutes (Spoons)

The width of the chute bottom should be no greater than two-thirds the width of the receiving belt. On the other hand, the inside width of the loading chute should be at least two and a half times the largest dimension of uniformly sized lumps, when they represent a considerable percentage of the material flow. Where lumps and dry fines are mixed, the inside width of the chute may be as small as two times maximum lump size or the stream cross section whichever is greater. Engineered loading chutes are called spoons and designed for specific material characteristics and flow rates.

These chute proportions are essential to the proper loading of the belt and to the prevention of interlocking and jamming of lumps in the chute. Thus, the width of the loading chute could, in some cases, determine the width of the belt on the receiving conveyor. Skirtboard design is also an important consideration as their width and depth must follow from an appreciation of the affect that the volumetric flow rate and stream velocity has on the flow stream cross section, just as they do on along the full chute path.

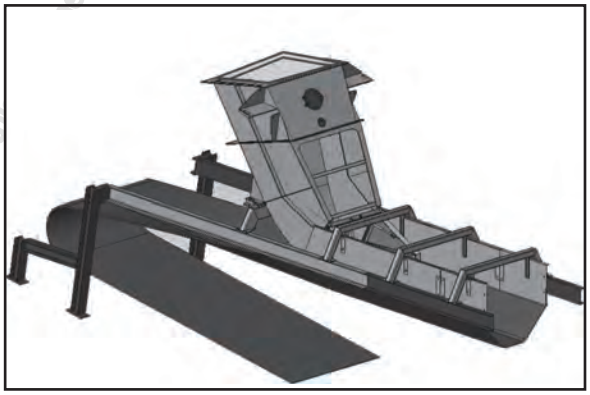

Figure 12.4
Spoon loading

CONTROLLED FLOW TRANSFERS

Controlled flow chutes are developed to handle the material in an intentional manner for specific purposes such as to limit impact, dust, wear or spillage. The need for field modification of conventional chutes during commissioning and early operations and the unexpected maintenance and cleaning has been motivation to replace the historic chute design approach with controlled flow transfers in many applications.

WWW.CEMANET.ORG has issued this document (1964) on Apr 24, 2015 to Nopadol Sritrakool (Siam Cement Group), Thailand

A wide range of practices and component concepts have been developed to control the flow in different manners but flow prediction calculations or simulations have allowed chutes to be configured, dimensioned and located to have the desired effect and capacity. Flow trajectory predictions are used to size and dimension chute surfaces to control the material stream throughout the transfer process. The design of the chute flow path itself, analysis of speed, angle and stream depth at all points along the transfer, minimized free-fall, etc, results in a system geometry specifically designed to control material direction and velocity for the particular application.

Material flow behavior in conveyor transfers is strongly affected by the momentum of the flow stream and by gravity. When sliding on surfaces and on itself, bulk material friction effects come into play. When designing for controlled flow bulk material internal friction has relatively minor effect on flow in most applications so that simple, well understood concepts of gravity, continuity and friction are sufficient to create an accurate well behaved and controlled flow. In other designs with significant internal material sliding and tumbling, such as rock boxes, the flow is affected by bulk material properties such as internal friction, cohesion, rebound, size and shape and these properties must be considered in the design.

The material flow can be predicted with continuity based equations for predictions of speed and cross sectional area or with the numerical techniques of the 'Discrete Element Method' or DEM. Continuity calculations yield a precise path for theoretical streamlines while DEM provides the geometrical location at sequential time steps of a large set of particles representing pieces of material. DEM, though usually scaled larger than reality due to numerical calculation limits, is a more iterative process since the complete model is usually totally constructed as follows rather than plotted out sequentially.

- Construct the boundaries of the physical system in CAD and import them to the DEM software. This includes conveyors, chute components, skirting etc.
- Define and input the conveyor velocities, flow rate and representative material properties.
- Run the model. This will usually require more than several hours.
- Review the graphical results and inspect for continuous velocities and fugitive particles.
- Revise the model geometry to eliminate any problems seen.
- Iterate until the desired results are obtained.

Results from both modeling methods range from very accurate to general estimates of flow velocities, cross section and path. Accuracy generally parallels the consistency of and the ability to accurately understand and model the bulk material. DEM software is commercially available allowing the process to be used routinely.

ADDRESSING IMPACT

Receiving belt covers and chutes can quickly degrade due to impact. The belt carcass can be pinched by hard lumps if supported by hard materials. Forces from unsupported belt lengths can be returned to the flow stream in a trampoline effect increasing wear in the impact area. After impact, the material must be accelerated back to the receiving belt velocity creating additional wear on the belt. Degradation of the bulk material from unnecessary turbulence and impact increases the fines in the material. An understanding these interactions is the first step in addressing them.

The flowing bulk material has kinetic energy as it leaves a conveyor and gains additional velocity as it accelerates from gravity. Impact, causing wear and damage of a different sort, occurs if the material stream is interrupted abruptly due to a steep angle of approach. Chutes, internal bulk material movements and the receiving conveyor absorb this energy as impact and the friction of sliding. Sliding from tangential contact causes abrasive wear on the chute, belt or skirtboards. The high normal force from

impact increases gouging and cutting of softer materials, cracking of brittle materials, and fracturing of material lumps. In addition, the sudden deceleration expands the flow stream cross section and splashes material into the air.

By Material Flow Control

Recent design tools and the bulk material properties can be used to design chutes that reduce impact and minimize wear. Methods such as controlled flow systems, which model the material as a fluid stream and discrete element modeling, which models the material as discrete particles, can predict and direct the material so that impact is considerably reduced. By controlling the flow of material, impact idlers or slider beds are often not required and load zones can utilize the standard load zone idler spacing. These design methods mean that all the associated problems of belt wear; spillage, dust generation and product degradation can be substantially reduced. The results can lead to reduced capital expenditure at installation and reduced maintenance and operating costs over the life of the conveyor system. It is recommended that a CEMA Member Company be contacted for more information on these design methods.

By Impact Idlers and Grizzlies

Traditional transfer chute design and conveyor layouts result in the bulk material rarely being placed on the receiving belt exactly in the direction of belt travel. Therefore impact is encountered as the material engages the surface of the belt. Severe, uncushioned impact can damage the belt cover and weaken the belt carcass, not to mention degrade the bulk material and cause spillage and dust problems. Very fine dense bulk materials do not cause much impact, except in very high capacity systems, but the belt can be deflected between the idlers by their weight unless the belt is supported by closely spaced idlers or belt support cradles. Such belt deflection allows material to pass under the skirtboards with resulting spillage over the belt edges, at or beyond the load zone. Lumpy materials, especially if the lumps are heavy, can cause appreciable impact on the belt. If the lumps are sharp, the belt cover may be nicked or cut. Heavy lumps also tend to crush the belt carcass, thus weakening it.

For conventional chutes, or when handling heavy, lumpy material with high impact to the belt, it is recommended that impact-absorbing idlers, impact cradles or saddles be used. They should be located under the loading point of the belt so major impact force strikes the belt between the supporting idlers rather than over any one of them, or in the middle of the cradle, rather than at either end. See Chapter 11 for information.

WWW.CEMANET.ORG has issued a Document 14501 on Apr 20 2007 to Pattarapon Sirabodee (Thailand), , , Thailand

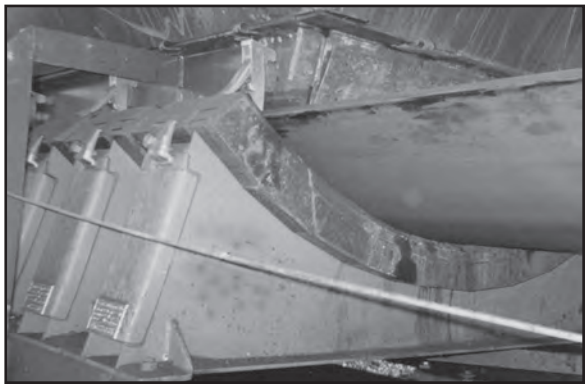

Figure 12.5
Impact saddles in load zone

Where the material consists of a mixture of fines and lumps, the loading chute can be arranged, so it first deposits the fines on the belt, and then deposits the larger pieces. This allows the layer of fines to cushion the impact of the lumps. This is accomplished by incorporating a grizzly bar or screen (Figure 12.6), or a notched or wedged shaped loading opening in the chute (Figure 12.7).



Figure 12.6
Grizzly loading chute

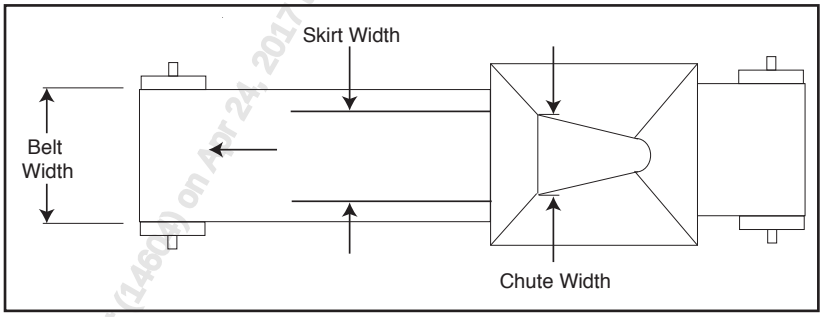

Figure 12.7
Notched loading chute for centering the load

By Short "Impact" Conveyors

Sometimes an accelerating or sacrificial belt between the feed belt and the load zone of a long, high-speed belt conveyor.

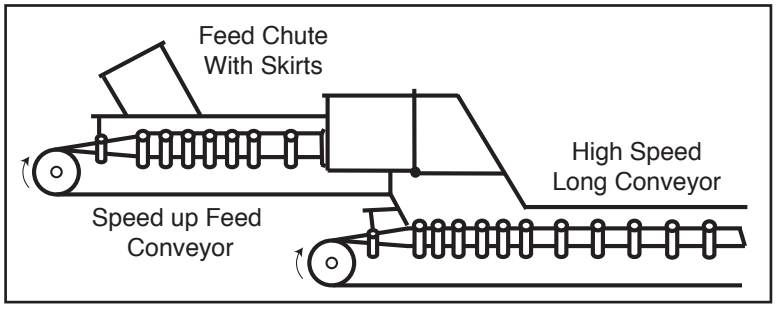

Figure 12.8
Speed-up feed conveyor

Use of the short, high-speed conveyor avoids the wear that otherwise would occur to the cover of the long and costly high-speed belt because of the acceleration of the loaded material, if the transfer chute has not been designed properly to eliminate impact and wear in the first place.

WWW.CEMANET.ORG has issued this document (1460) on Apr 24, 2017 to Pattaya

The length of this speed-up conveyor should be sufficient to bring the speed of the material very close to the speed of the main receiving belt conveyor. The cover of the speedup belt should be thick enough to accept the wear caused by the acceleration of the material leaving the loading chute. If the impact of the material leaving the loading chute is high, the speed-up conveyor should be flat. It should run on flat, impact-absorbing idlers or an impact-absorbing slider bed. Continuous skirtboards with an effective edge sealing system should be provided. This flat belt can be made of the required plies and thickness of cover to meet the impact, without consideration of belt troughing capabilities.

If the impact condition is not severe, a lighter-bodied belt can be used, with a cover thick enough to withstand the wear. This lighter belt can be carried on troughing idlers, as illustrated in Figure 12.8. Flat or troughed, speed-up conveyor belts must be considered expendable and therefore the conveyor must be designed for the belt to be replaced relatively frequently.

By Rock Boxes or Stone Box Chutes

If the material to be handled is severely abrasive or consists of large, lumpy, heavy pieces, and the speed of the receiving belt is slow, it is possible to arrange the chute bottom so it forms a box in which some of the material is retained. The material fills the corners and forms an angle in the box approximately equal to the angle of repose. The loading material will then flow over this retained material, wearing the material rather than the chute walls. This arrangement commonly is called a "stone box" or "rock box" and is most often seen in gravel, rock, and ore handling. The material velocity leaving the rock box is usually much slower than entering it and can require additional height and chute room to thin out the flow stream or it may cause chute pluggage or more receiving belt sliding wear.

Note:
Stone box designs should not be used for combustible materials, such as dusty coal as the stagnant material may self ignite.

www.CEMANET.ORG has issued this document (14664) on Apr 24 2011 to Gabriel Sfiraki (gsfiraki@yahoo.com)

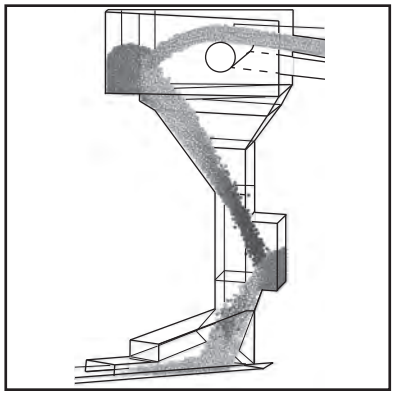

Figure 12.9
Stone or rock box load chute modeled with DEM

CONTROL OF FUGITIVE MATERIAL

Introduction

Material escaping from conveyors is an everyday occurrence in many plants. It arises as spillage and leakage from transfer points, carryback that has adhered to the belt past the discharge point and is then dropped off along the conveyor return, or as airborne dust that has been carried off the belt by air currents and the impact forces of loading.



Figure 12.10
Fugitive material due to transfer point spillage



Figure 12.11
Fugitive carryback material under belt return

Fugitive material has been around plants since conveyors were first operated, and for a long period of time it was accepted as part of doing business. Today governments and regulatory agencies all over the world are revising their policies to address this important issue. In the USA, new regulations enforced by the Environmental Protection Agency as well as locations in which plants operate, have caused operators to limit dust emissions considerably. In particular the push towards mining and handling USA Powder River Basin (PRB) coal has led to much development in this area, since this type of coal is particularly dusty.

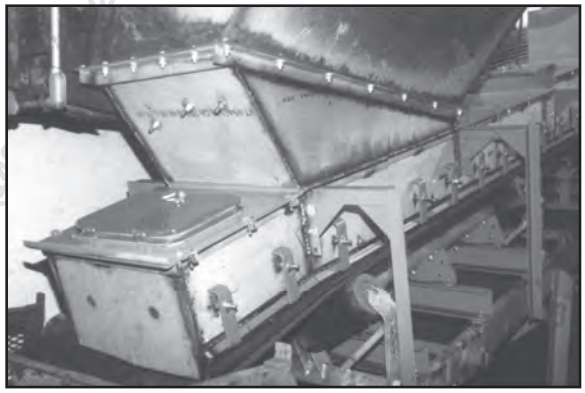

Figure 12.12
Conventional transfer point rebuilt to control fugitive materials

Fugitive material includes both coarse particles and lumps, which collect around transfer points as spillage and fine particles, which due to their size have a tendency to be airborne. Ways of minimizing spillage are addressed by proper design of transfer chutes, selection and proper maintenance of belt cleaners, central loading on to receiving conveyor belts and other factors. See Chapter 11 for more information on accessories and design techniques used to control fugitive materials.

This section describes the current methods available to control dust and the first thing to understand is the particle size in order to design the proper dust control system. Dust is broadly defined as any particle smaller than 500 microns in diameter that can remain airborne. Particles 10 microns or smaller in diameter are classified as respirable dusts. Respirable dust is capable of penetrating airway defense mechanisms and lodging in the gas-exchange region of the human lungs where it cannot be eliminated by the normal bodily processes. When suspended in air, respirable particulate matter affects humans as it is inhaled, forcing the heart and lungs to work harder to provide oxygen to the body. This can lead to a

www.EEMUA.org has issued this document (1/4/2024, 6:07:27 PM) to Rajaram Sritrakool

decreased breathing ability and damage to the heart. There are numerous references on this topic and the conveyor designer should determine the applicable regulations and limits for the specific bulk material.

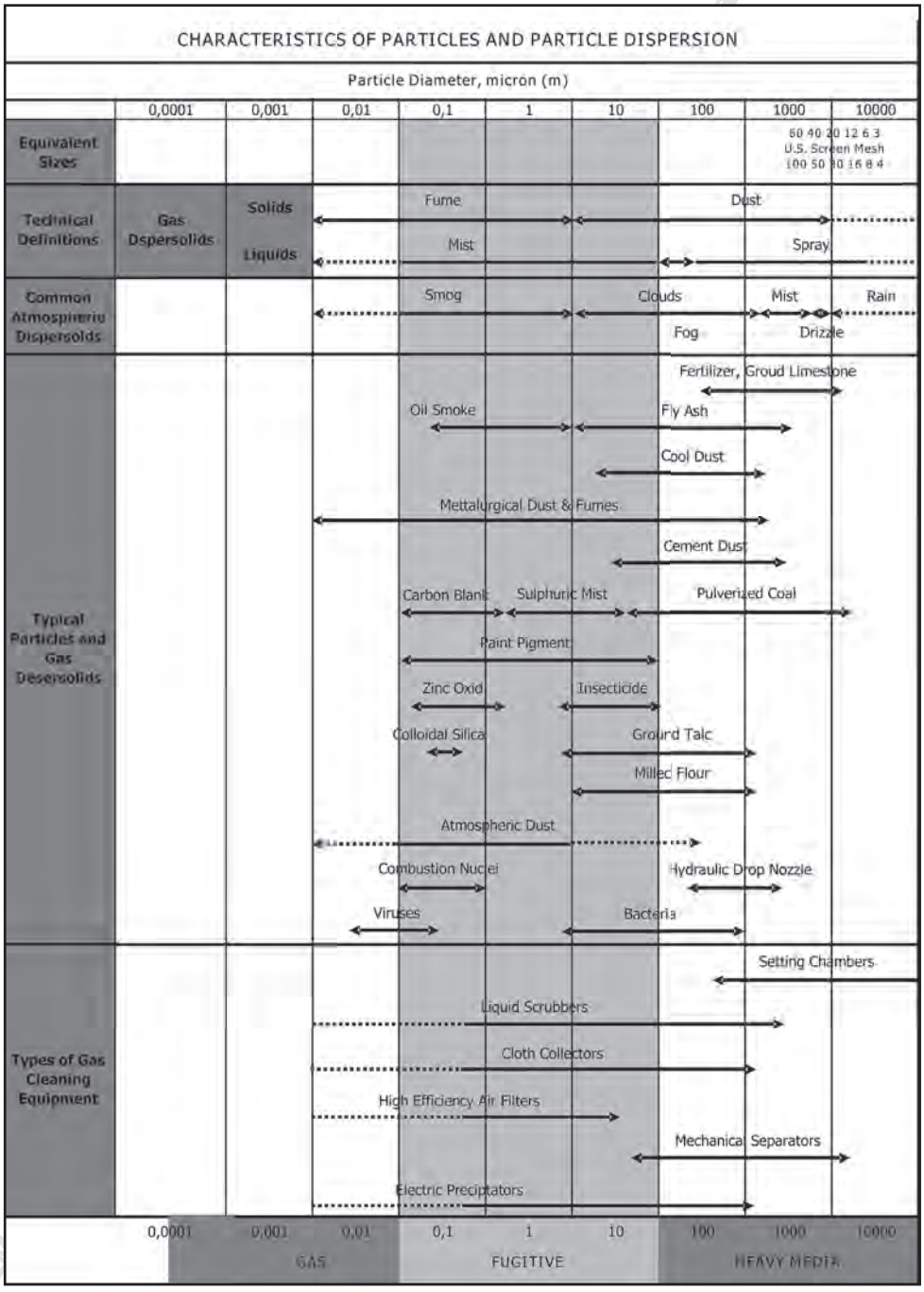

Table 12.13
Particle size table

Regulatory Limits and the Environment

There are several methods for estimating emissions (Emission Inventory Improvement Program, 1999), they are:

- Emission calculations using emission factors
- Emission calculations using emission models
- Emission calculations using engineering equations
- Emission calculations using stack sampling data

Each country has their own organizations protecting the safety and health of workers. In the US, these are OSHA (Occupational Safety and Health Administration), MSHA (Mining Safety and Health Administration) and NIOSH (National Institute for Occupational Safety and Health).

Many power plants as well as mines are now adopting the limits established by MSHA for Coal Miners. The Mining Safety and Health Administration (MSHA) in 30 CFR, Part 71.100 states: "Each operator shall continuously maintain the average concentration of respirable dust in the mine atmosphere during each shift to which each miner in the active workings is exposed at or below 2.0 milligrams of respirable dust per cubic meter of air."

Therefore there is often a requirement for new conveyor systems and transfer chutes destined for the United States to be able to meet this dust level. Further, NIOSH has made recommendations to MSHA to limit dust emissions further, to 1.0 mg/m^3, though this has not yet been adopted as a regulation. Other mineral dusts may have different permissible levels.

Obviously, the safety and health of workers is of paramount importance and therefore any new transfer system should be able to reduce dust emissions as much as possible. Some other reasons for dust control are identified below:

- Increased Operating Efficiency – The accumulation of material around the conveyor means that it is not actually being carried where it needs to go and therefore needs to be re-handled and/or recycled. The process of decontamination and reclassification of this material is a significant cost. Frequently the fugitive material is not recyclable which makes the cost even higher. In addition to the cost of cleaning the area, transportation and dumping of that material is an unnecessary and time-consuming operation.
- Reduced Conveyor Maintenance Costs – The escape of material from a conveyor leads to any number of problems on the conveyor system itself. These problems increase maintenance downtime and costs. The first and most visible added expense is the cost of the cleanup Excessive dust leads to premature belt, idler and pulley failure as well as high clean-up costs.
- Increased Plant Safety – MSHA and OSHA have conducted several studies and their conclusion has shown that accident statistics prove that conveyors with a lot of dust and spillage are the most dangerous form of haulage used in mining.
- PPE - The requirement of workers to wear personal protective equipment to protect from dust may lower reaction time, decrease the ability to communicate and reduce vision.
- Fire and Explosion: There is also a higher risk of fire or explosions when combustible material is allowed to build up or become airborne.
- Employee Morale – The physical environment has a significant influence in worker's morale.
- Increased Quality – Dust can contaminate the plant, the process and the finished product. Material can be deposited on sensitive equipment to adversely influence sensor readings or corrupt tightly specified formulas.

WWW.CEMAT.IN (Restricted distribution) on Apr 2, 2017 to Padmanabh Chitrabhanu Shenluang, , , Thailand

Methods to Control Dust and Spillage

Fugitive material occurs at transfer points, as spillage, during loading onto the next conveyor. The second form of spillage occurs when fine material sticking to the belt falls off as the belt makes its return trip through the underside of the conveyor frame. The most difficult fugitive material problem to address is the generation and control of airborne dust.

The amount of dust generated is proportional to the air velocity, and inversely proportional to the particle size and the material cohesiveness. Any solution that decreases the air velocity, increases particle size, or increases material cohesiveness will decrease the amount of dust released.

The industry has developed specialized transfer chute systems, which can help with the control of fugitive material. However everything starts with the conveyor design and the corresponding transfer points. When designing transfer chutes, engineers should keep in mind the need to control all types of fugitive material.



Figure 12.14
Loading performance can be achieved with a well designed chute

To reduce all fugitive materials, the CEMA recommendation is:

- Designing for prevention of all types of fugitive material is essential.
- Conveyor belts must be aligned and track true.
- Carryback must be eliminated.
- Design of belt support and sealing in the load zone area must be addressed.
- Consider containment or collection systems for dust.

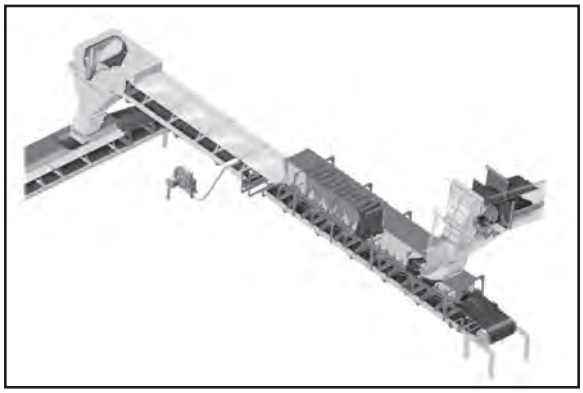

Figure 12.15
Transfer points designed to control dust and spillage

WWW.CEMANET.ORG has issued this document to

When designing a Transfer Point it is essential that the material be placed centrally on the receiving belt. During the conveyor installation it is also vital that before start up a complete alignment check of all items is carefully carried out. If any problems of alignment are discovered then there are many products and services available that would help align the belt and keep it running true. See Chapter 11 – Belt Training Devices.

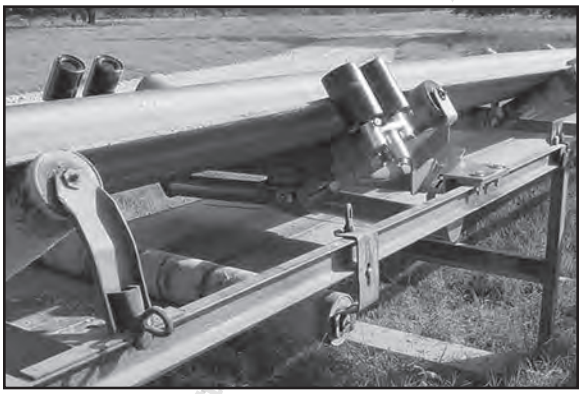

Figure 12.16
Belt training idler

It is clear that material adhered to the belt is a major source of fugitive material and varying bulk material properties and operating conditions make it the most difficult to control consistently. Besides being a source of fugitive material, the carryback has a tendency to stick on components like rollers and pulleys. Careful selection of belt cleaners and plows is therefore necessary. Refer to Chapter 11, Conveyor Belt Cleaning Equipment for more information.

The construction of an efficient conveyor load zone starts with good support for the belt. However with the use of controlled flow designed transfer chutes, the reduced impact means that traditional impact or slider beds may not be required. Consult a CEMA Member for more information. Refer to Chapter 11 – Impact Beds and Slider Beds - for information on the types of products available.

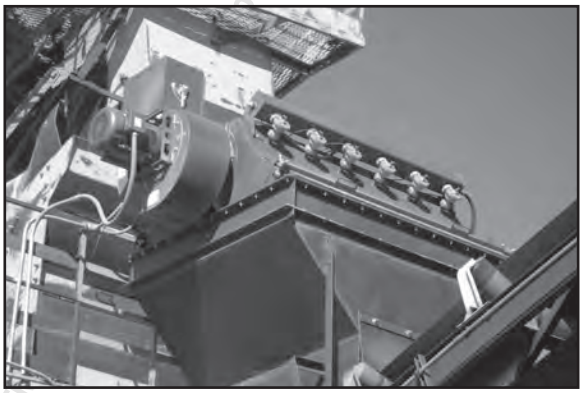

Figure 12.17
Dust control for transfer points with modular air cleaner

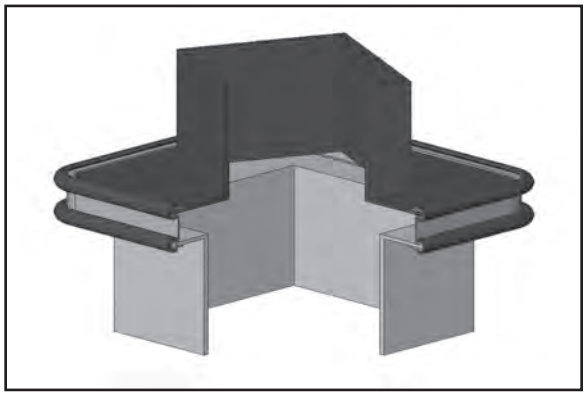

Figure 12.18
Flexible sealing between transfer chute components

The design of transfer points needs to address airborne dust. The first and most effective dust control measure is to minimize dust generation by minimizing flow stream splash and induced air flow. Even when transfer chutes are designed with optimum flow characteristics, it still may be necessary to provide sealing of components to prevent the inducing of air into the transfer.

Control of Air Movement

The chute profile and other geometrical considerations have an increasing importance in achieving a reduced dust emission at the transfer point. For a good comprehension of the relationship between chute geometry and degree of dust emission it is necessary to understand the mechanism involved in generating dust inside the chute. The change of direction of the material stream that occurs in every transfer point causes within the material trajectory a separation of the different particle sizes as a consequence of their mass difference and allows the smaller particles to become airborne.

The main reason for dust emission is the positive pressure inside the chute, which tends to drive out air and dust particles. Since the chute cannot be not completely sealed, its internal pressure is a direct consequence of the air volume generated by the incoming material. There are three sources of air movement in a given transfer point: Displaced Air (Q_{dis}), Induced Air (Q_{ind}) and Generated Air (Q_{gen}). These three sources are summed to develop the total volume of air that must be managed in the transfer point for dust control.

Displaced Air

When a certain volume of material enters a chute and impacts the receiving conveyor a volume of air equal to the volume of bulk material is pushed out as displaced air. The volume of displaced air is calculated in volume per minute units.

$$Q_{dis} = \frac{Q}{\gamma_m}$$

Equation 12.19
Q_{dis}, Displaced air in transfer point

Where:

Q = Design capacity of system [tph (mtph)]
γ_m = Bulk density of the bulk material [lbf/ft^3 (kgf/m^3)]

Induced Air

Induced air is air dragged along by the separation of the bulk material after leaving the head pulley. When the load is conveyed it contains a certain amount of entrapped air between particles. During the transfer of bulk material from the conveyor the particles separate creating a negative pressure which draws more air into the chute. The total amount of induced air depends on the degree of size and separation of particles, as well as on the speed of falling material. When the material lands and becomes "compacted" most of this air is released, causing a local increase of air pressure in the load zone and surroundings pushing away the fine material. The volume of induced air is calculated in volume per minute units. The following equation provides an approximation of the amount of induced air for chutes.

$$Q_{ind} = CF \times A_u \times \sqrt[3]{\frac{Q \times S^2}{D}}$$

Equation 12.20
Q_{ind}, Induced air in transfer point

www.CEMATORCH.com has licensed this document (14604) on Apr 24, 2017 to Pattarapom Chaiyo of Siamquartz Thailand

Where:

Q_{ind} = Volume of air induced into transfer point $\left[\frac{ft^3}{min}\left(\frac{m^3}{min}\right)\right]$

CF = Unit conversion factor: 10 for imperial units and 0.078 for metric units

A_u = Total open areas of transfer point where air can enter $\left[ft^2(m^2)\right]$

Q = Design capacity of system $\left[tph(mtph)\right]$

S = Height of material free fall $\left[ft\ (m)\right]$

D = Average bulk solid diameter $\left[ft\ (m)\right]$

The induced air is usually the dominant portion of air responsible for the dust emission and the design criteria of chutes should follow the basic concept by acting on the variables cited above. For instance, the chute profile should favor the reduction of cross sectional area of the material stream in order to compact the material. Chute designs that encourage sliding, such as those using hoods and spoons, minimize the exposed surface of the flow stream by blocking one side and consolidating the other side. The chute geometry should also prevent the material from accelerating unnecessarily during the fall, or preferably limit the amount of free-fall altogether so that splash or impact energy on the belt and skirt seals is controlled.

Another important and practical parameter is the reduction of the open area A_u by means of a good sealing arrangement at the belt entry and exit from the head pulley of the discharging conveyor. Other components of A_u are openings around shafts, inspection doors and openings for access to accessories.

Generated Air

Q_{gen} is the air generated by the action of equipment that feed the conveyor load zone, such as crushers, hammer mills, wood chippers etc. Many of these devices are designed to work with a plug of material above them to reduce generated air issues but the design must anticipate that occasionally the plug will not be maintained and significant volumes of air can be pushed through the transfer point. The volume of generated air is calculated in volume per minute units. The manufacturer of the equipment should be contacted to determine the amount of air generated, or the airflow could be estimated by measuring the air flow of similar existing equipment.

Dust Control



Figure 12.21
Dust emissions

WWW.CEMANET.ORG is issued to [illegible] (Account 14604) on Apr 4, 2017 for Participant Strakon, Suanluang, Thailand

There are several systems available, which do not generate additional dust in the transfer process, to provide dust control at transfer points:

- Wet, dust suppression
- Dry, dust collection
- Containment chute systems
- Controlled flow chutes

With all systems, the following information is required to address which dust control system is better for any application:

- Concentration – Amount of dust and particle size
- Characteristics of the dust – Abrasive, hygroscopic, combustible, density, etc.
- Characteristic of the air stream – Temperature, Moisture, Vapor, total air volume, air speed, etc.
- Degree of collection efficiency required
- Final disposal of the collected dust

Dust Suppression



Figure 12.22
Dust suppression sprays

Dust Suppression is the application of water to wet the fines with or without chemicals, applied either to the stream of the material, to prevent fines from being carried off into the air, or to the air above the material, to return airborne fines to the material bed. By wetting the fines the weight of each dust particle is increased so it is less likely to become or stay airborne. The moisture also increases the cohesive force of the bulk material agglomerating the particles creating larger, heavier groups of particles, thus making it more difficult for air movement to carry off fines. This can be done by applying the water through a series of properly sized and located nozzles at a point where the material expands and takes in air, such as during discharge from the head pulley in a transfer chute.

The systems available in the market are:

- Plain water spray or water cannons
- Water surfactant spray
- Water/air surfactant/spray
- Fog spray or fog cannons
- Foam spray

WWW.EMAINT.COM is exclusively licensed to Pattarapom Smitrakul, Suanluang, , , Thailand

Which type to use depends on the extent to which dust must be removed, particle size and the amount of water to be added to the process. As water is added it increases the weight and cohesiveness of the bulk material and may cause downstream problems such as mistracking, additional carryback and chute plugging.

Water Added as a Percentage of the Bulk Material Flow Rate, Q				
Type of Suppression	**Water Spray**	**Water with Surfactant**	**Foam**	**Fog**
Rate of Moisture Addition	**5.0%**	**2.5%**	**0.2%**	**0.05%**

Table 12.23
Typical water addition rates for dust suppression

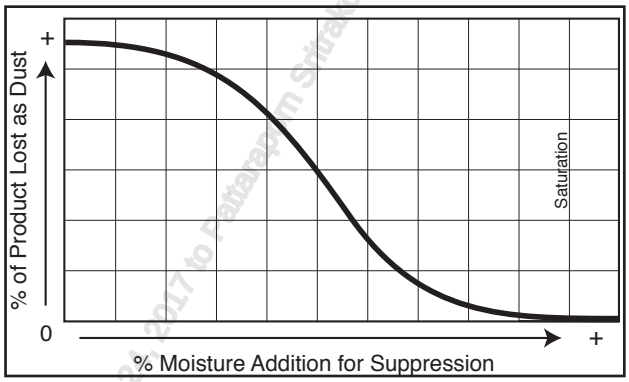

Figure 12.24
Effect of excess water addition for suppression

Ideally, water can be added to produce a moisture content that is near or slightly more than the saturation point, beyond this point there is no added dust suppression benefit. The addition of excess water increases the bulk density of the bulk material and can reduce the friction between the bulk material and the belt. Reduced friction can cause the bulk material to slide backward on the belt and increase the length of time it takes for the bulk material to reach the speed of the receiving conveyor. Both of these conditions can cause severe spillage at the transfer point.

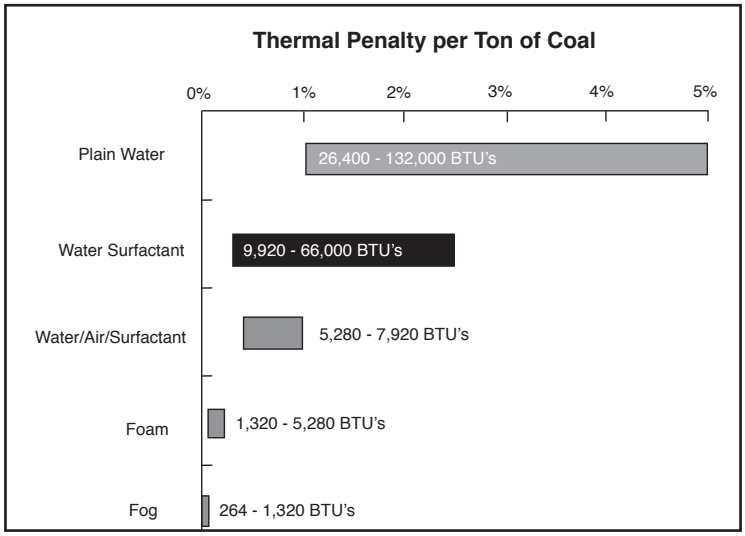

Table 12.25
Typical thermal penalties for dust suppression of coal

WWW.CEMANET.ORG has issued this document (2654) on Apr 2, 2017 to Pattaraporn Sirisakol, Suez Cement (Thailand)

The additional water must be balanced with the thermal penalty. It is important to understand that there is a thermal penalty due to the addition of water. Many thermal processes do not allow any additional water added to the fuel or raw materials.

The most common method of applying water is through low pressure sprayers at the discharge of the conveyor belt. This guarantees full penetration of water into the material stream as the water is applied as the material is separating.

The effectiveness of any system is related to the relationship size of the particle versus size of the water droplet. When the droplet is too big the efficiency of the system is very low because the surface tension and air streams around the larger droplets does not allow attachment of the smaller dust particles. When water is not efficient and there are particles less than 100 microns (100 µm), the addition of a surfactant is necessary in order to increase the wetting capacity of the water by reducing the surface tension of the water. A typical water/surfactant ratio is 1:5,000. Another point to be considered is the size of the particle.

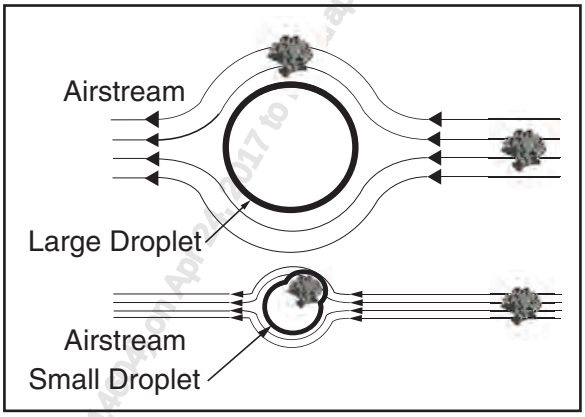

Figure 12.26
Slipstream effect on dust particles

In order to effectively control the dust in the air the size of the water droplets must be kept within a specific size range. If the droplets are too large, the smaller dust particles typically just "slipstream" around them, pushed aside by the air around the droplets. The size of the droplets is related to water pressure, the use of surfactant, and finally, to the use of a second fluid atomizer like compressed air.

The most common dust suppression systems used to control dust at the transfer point are: fog, surfactant, two fluid atomization and foam systems.

Fog Systems

Fog systems produce extremely small water droplets through a set of very fine nozzles to spray a mist over the airborne dust at the transfer point. The applied pressure is up to 500 psi (3.4 MPa) and the diameter of the nozzles is 1/64 inch (0.4 mm) or less. Because of the nozzle size the water has to be very clean and free of dissolved minerals that may build up and plug the nozzles . Since the droplets are very small the amount of water added to the process is minimal, between 0.03 – 0.13 gallons per ton (0.10 to 0.55 l/mt).



Figure 12.27
Fog nozzles surrounding discharge



Figure 12.28
Portable fog generator

Applications range from a few nozzles on a loading zone chute to 360 degree arrays of nozzles surrounding an open discharge stream to portable fog generating systems that can cover up to a 330 ft (100 m) radius. Central pump and filter systems are often employed for multiple transfer chutes with each chute consuming between 0.1 to 0.5 gpm (0.04 to 2.0 lpm) of water per transfer. Typical ring applications consume 3 to 50 gpm (11 to 190 lpm) depending on ring diameter and water pressure for a single discharge. Typical portable systems consume 12 to 40 gpm (45 to 150 lpm) depending on throw distance and water pressure. Portable systems can rotate to cover a full 360 degree area or be mounted on mobile equipment to cover wide areas.

Surfactant Systems

The basic difference between a water spray or fog system is the addition of surfactant. The surfactant reduces the surface tension of the water, and helps reduce the size of the droplets, which increases the wetting capacity. The water pressure can also be reduced. The nozzles can be larger in diameter and the resulting water consumption is from 0.75 – 7 gallons per ton (3.1 to 29.8 l/mt). The water/surfactant relationship is typically 1:5,000. Water pressure ranges from 175 up to 220 psi (1.2 to 1.5 MPa) and nozzle diameter from 1/32 to 1/16 inch (0.8 to 1.6 mm). Because this system produces a larger droplet the efficiency is not ideal when the particles are less than 100 microns in diameter. Chemicals such as dust suppressants, fuel additives and waste fuels blended with the bulk solid may affect the belt and result in cover deterioration or belt cupping. Dust suppression chemicals that are process and human safe are available. Typically the equipment includes:

- Water pump
- Metering pump – necessary to add the surfactant according to the water volume
- Control panel
- Electric panel
- Spraying nozzles
- Necessary plumbing

WWW.CEMANET.COM This Site is Licensed (Single) on Apr 24, 2014 to Pearl from Site

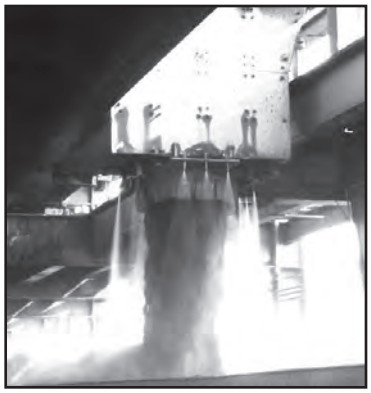

Figure 12.29
Single fluid atomization

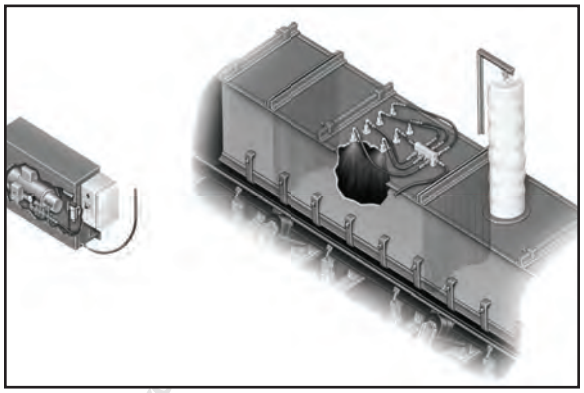

Figure 12.30
Nozzle arrangement for dust suppression and dust sock for air relief

Two Fluid Atomization

Water plus air plus surfactant is an effective dust suppression system. The addition of compressed air, combined with the surfactant allows the system not only to produce a fine droplet but also to reach larger areas due to the carrying effect of the air. It is the ideal system for truck or railroad car dumpers, open hoppers, etc. The working water pressure is typically 22 psi (0.15 MPa) ; the required volume of compressed air is proportional to the number of nozzles applied. The air consumption of each nozzle can go from 1.5 up to 4.5 cfm (0.4 to 1.3 m^3/min) . The nozzles are designed to allow the atomization outside of the nozzle or in a mixing chamber. The surfactant/water relationship is typically 1:5,000, the water consumption can go up to 1% of the processed material weight.

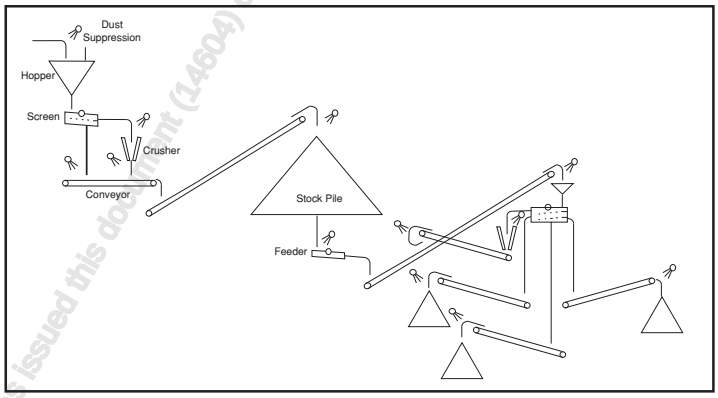

Figure 12.31
Typical crushing plant dust suppression applications

The above figure shows a typical crushing plant. As an example, to control the dust in the entire plant requires 52 nozzles in 9 locations. Therefore the total air consumption would be approximately 130 cfm (3.6 m^3/min). A typical two fluid atomization system includes the use of the following components:

- Water pump
- Metering pump – necessary to add the surfactant according to the water volume
- Control panel including automatic controls
- Electric panel
- Spray nozzles
- Necessary plumbing
- Air compressor

IHSNET.ORG has issued this document (14604) on 12/27/2007 to Petrapole Bakery

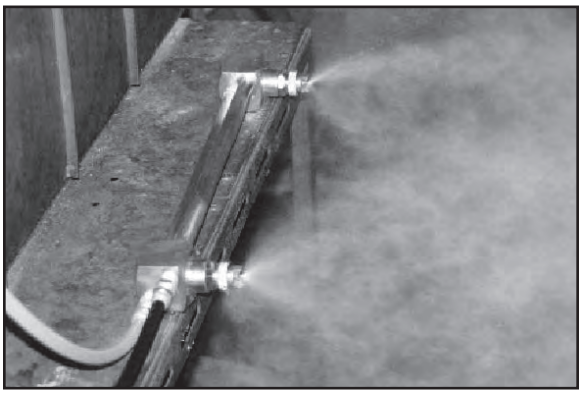

Figure 12.32
Two fluid atomization nozzles

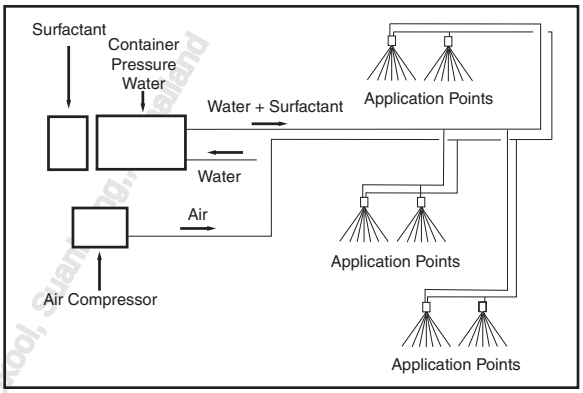

Figure 12.33
Two fluid atomization layout

Foam Dust Suppression

Foam dust suppression works by reducing the surface tension or "static charge" of individual dust particles and increasing the molecular attraction between fugitive dust particles and the material mass. Mixing foaming surfactant, water and compressed air in proper proportions generates the foam. Application of foam dust suppression into transfer points can increase immediate and midterm dust suppression through several transfer points and stack out operations (residual effect). Foaming surfactants with residual agents can increase the dust suppression effect over longer storage or transportation periods, such as stockpiling or shipping. Moisture addition from foam dust suppression systems range from 0.08% to 0.2% by weight of the bulk solid. At these reduced levels of added moisture, the adverse thermal affects associated with excess moisture are greatly reduced or eliminated.

Using foam in dust suppression is not easy because of the difficulty in reaching all of the particles in the material mass. Example: Handling 1000 tons per hour (907 mtph) of coal the consumption of water, air and foam surfactant is as follows:

Water Volume 1.18 cfm (0.33 m^3/min)
Water Pressure 58 psi (0.4 MPa)
Air Volume 100 cfm (2.8 m^3/min)
Air Pressure 102 psi (0.7 MPa)
Foam Surfactant 5.2 gallons per hour. (19.7 l/h)

These rates of consumption could vary depending upon the screen analysis of the material being treated. The equipment required for a Foam Dust control system consists of the following:

- Air compressor
- Water pump
- Metering pump
- Control panel
- Electric panel
- Expansion chamber
- Spray nozzles
- Plumbing

www.CEMANET.org has issued this document (14600) to Mr. Pattarapom Sritrakool, Siam Cement Group, Thailand

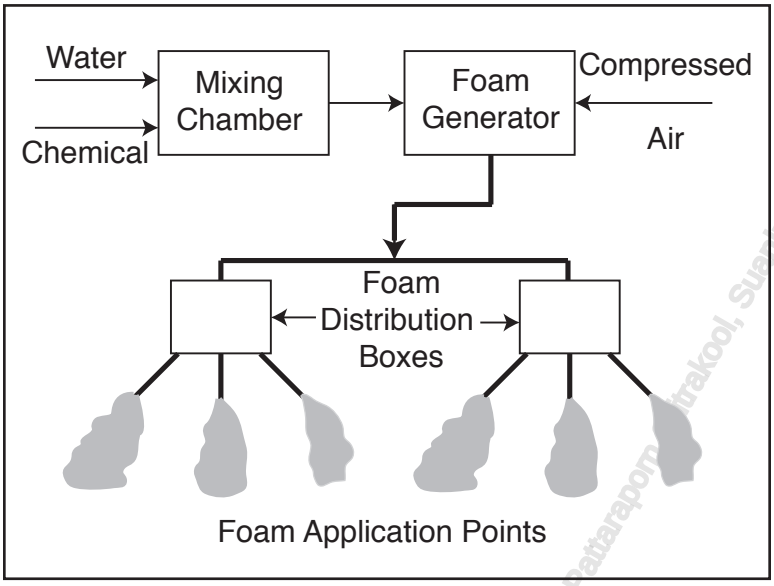

Figure 12. 34
Typical foam system



Figure 12.35
Use of foam on a conveyor transfer point

Dust Collection

Dust collection controls dust emission at transfer points by passing air carrying the dust from the load zone through some form of filtration system. There are passive systems, which merely allow the air to pass through the filters or baffles, and active systems, which pull the air under vacuum through a filter media to collect the dust particles. Although there are dust collection systems utilizing water sprays and vacuum, only dry dust collection systems are discussed in this section. Any conveyor system can have a number of dust problems that may require dust collection. The size and the cost of a dust collection system depend on the volume of air, the velocity of the air and the amount of dust to be collected. In addition probably the most important variable is the type of material being conveyed and the type of filter media to be used. The important variable for active dust collection is the Filtration Velocity, rate of air flow through the filter media. The selection of a dust collection system needs to consider the following criteria:

- Concentration – amount of dust and particle size
- Characteristics of the dust – abrasive, hygroscopic, combustible, density, shape of the dust particle, etc.
- Characteristic of the air stream – temperature, moisture, vapor, total air volume, air speed, etc.
- Degree of collection efficiency required
- Final disposal of the collected dust

WWW.CEMANET.COM Offices Ltd. (Thailand) on Apr 24, 2017 to Pattarapon Chitrakool, Suanluang

Application	Filtration Velocity	
	fpm	m/s
Easy to Filter Dusts Flour Paper Grain	9.8	0.050
High Permeable Dusts Gypsum Foundry Sand Limestone	7.2	0.037
Medium Permeable Dusts Cement Coal Fertilizer	5.9	0.028
Low Permeable Dusts Pigments Carbon Black Alumina	4.6	0.23
Difficult to Filter Dusts Very Fine Low Density Activated Carbon	3.3	0.17

Table 12.36
Typical filtration velocities

www.EVANDEAN.com Licensed to document control on Apr 24, 2021 to Natarapom Sritrakool Suanluang, , Thailand

Active Dust Collection Systems

Mechanical dust collection systems are installed to pull dust-laden air away from the conveyor transfer point, separate the dust and then exhaust clean air. A typical dust collection system consists of four major components.

- Exhaust hoods or pickups, to capture dust at the transfer point
- Duct work to transport the captured air/dust mixture to a collector
- A collector, filter, or a separation device to remove the dust from the air
- A fan and motor to provide the necessary exhaust volume of energy

There are many different types and designs of dust collectors and filters available but they should all have certain basic features incorporated into their design. All fume and dust control equipment must be designed not only to carry out the work of separation, but must also incorporate a suitable waste collection and disposal mechanism so that it does not become overloaded. In the case of a fabric filter, this means the filter cleaning and dust discharge mechanism, and in the case of wet applications there must be automatic sludge disposal and water replenishment system.

Central Fabric Filter Units

Fabric filters use multiple bags or socks mounted on cylindrical or rectangular cages enclosed in a housing through which the dusty air is pulled through by a negative pressure. The dust gets trapped on the filter media and if the media were left uncleaned, air movement would be blocked. Because of this some kind of media cleaning mechanism is necessary. Industry commonly uses a counter flow of compressed air to automatically and frequently clean the bags with pulses of air. Collected dust accumulates at the bottom of the housing and is discharged through various isolation means like rotary valves. The dust is then reintroduced into the process or disposed of, often as hazardous waste. There are certain criteria that are

common to all fabric filtration systems. These can be summarized as follows:

- There should be an adequate area of effective filtration media relative to the dust type that is handled. The selection of the correct filtration area (and hence the filtration velocity) is most critical as the effectiveness of the separation and filtration process depends on it.
- The dust collection system can operate continuously or on an intermittent basis, and efficient automatic filter cleaning mechanisms must be provided.
- A suitable disposal method has to be included in the design to avoid a secondary dust hazard.
- The collector must have convenient access for maintenance and service. Access from the clean side of the filter elements is required.
- Designed so that the airflow is in the downward direction.

Class of Fiber	Acid Resistance	Alkali Resistance	Abrasion Resistance	Will Support Combustion
Woven Cotton	Poor	Poor	Poor	Yes
Woven Polyester	Good	Good	Very Good	No
Polypropylene	Excellent	Excellent	Very Good	Yes
Gortex	Good	Moderate	Very Good	No

Table 12.37
Filter media alternatives

For many dust applications the filter material employed is good quality natural cotton, with a weight of around 0.05 lbf/ft^2 (250 g/m^2) and a filtration velocity in the order of 5 fpm (1.5 m/min). However if there is evidence of moisture or corrosive chemical in the dust stream then it is recommended to use woven polyester which can offer filtration efficiency equivalent to that of a natural fabric but greater resistance to chemical attack. For high temperature applications a special kind of fabric will have to be considered. Where static electricity can create a risk of fire or explosion, anti-static filters must be used. In order to specify and size the media area necessary for filtration the following data is required:

- Width of the belt
- Speed of the belt
- Material being conveyed
- Fall height

Belt Speed	Suggested Exhaust Volume per ft (m) of Belt Width
< 200 fpm (< 1 m/s)	21,000 ft^3/h-ft (1950 m^3/h-m)
> 200 fpm (> 1 m/s)	30,000 ft^3/h-ft (2785 m^3/h-m)

Table 12.38
Industrial Ventilation suggested exhaust volumes for transfer points

WWW.CEMANET.ORG it is issued this document (3184) on Apr 4, 2017 to Rubicon Structural, Suardeg, , Italy

Material: Coal BW = 36 in V = 300 fpm Filtration Velocity = 5.9 fpm Media: polyester

$$\text{Exhaust Volume} = \frac{\text{BW (ft)} \times \text{Table 12.35 value}}{60\frac{\text{min}}{\text{h}}} = \frac{3(\text{ft}) \times 30{,}000(\frac{\text{ft}^3}{\text{h}-\text{ft}})}{60(\frac{\text{min}}{\text{h}})} = 1{,}500\ \frac{\text{ft}^3}{\text{min}}$$

$$\text{Media Area} = \frac{\text{Exhaust Volume } (\frac{\text{ft}^3}{\text{min}})}{\text{Filtration Velocity } (\frac{\text{ft}}{\text{min}})} = \frac{1{,}500\ (\frac{\text{ft}^3}{\text{min}})}{5.9\ (\frac{\text{ft}}{\text{min}})} = 254.2\ \text{ft}^2\ (23.6\text{m}^2)$$

Figure 12.39
Example calculation for filter media area

Bag filters can be designed as a central unit or as individual units located at the point where the dust is generated. When used as a central unit, duct work connects multiple dust collection points and there is a central dust collection hopper. Sizing of central systems can be difficult if not all exhaust points are required all the time increasing the velocity of the collection air and potentially carrying larger particles than intended to the central collection point or slowing the velocity and plugging duct work.

Passive dust control systems greatly reduce the amount of dust created and therefore the exhaust volumes required. Passive systems are often design with individual units mounted on top of the skirtboards to handle surge flows of air from process equipment or chimney effects. The dust from individual unit is typically reintroduced onto the belt.

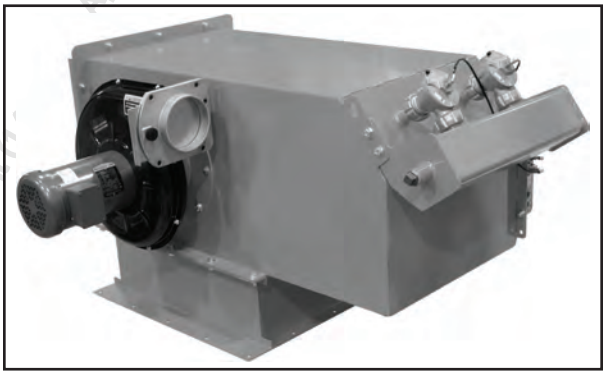

Figure 12.40
Individual transfer point air filter

Explosion Protection

A wide range of dust is capable of producing an explosion. These include carbonaceous materials, plastics, fertilizers, pharmaceuticals, fuel, chemicals, foodstuffs and certain metals. Defining the risk is much more difficult. By its nature a dust collector contains clouds of fine particles in suspension. If these particles are of material known to be combustible, then if an ignition source is present an explosion may occur.

There are several ways to prevent the risk of an explosion. The most usual are:

- Use of an inert gas
- Using a pressurized suppression, which is released into the explosion area
- Design the vessel to withstand the maximum pressure
- By the most common method, using an explosion relief panel (a panel designed to explode instead of the dust collector)

www.EBOOKSTORE has issued this document to Apr 25, 2017 to Pattrakorn Sittrakool, Stanluang, , Thailand

Passive Dust Control

In many cases dust can be controlled to acceptable levels passively without the need for active dust collection means. The most basic approach to passive dust control is the design of conventional transfer chutes for passive dust containment and settling of the dust by gravity including;

- Use Chapter 4 recommended belt speeds for the material and application
- Minimize impact by controlling drop height and transfer velocity
- Minimize induced air flow by restricting discharge chute openings
- Proper length and height of the skirtboards
- Use of dust curtains

Controlled flow chutes using the hood and spoon approach, in addition to containment measures, can reduce dust generation and provide additional benefits in the transfer of bulk materials. The design concepts for passive dust control and controlled flow chutes are compatible and many hybrid systems have been designed and installed that successfully control dust emission levels. In some cases where enclosures are impractical, such as slewing ship loader discharges, controlled flow chutes alone can provide significant dust mitigation.

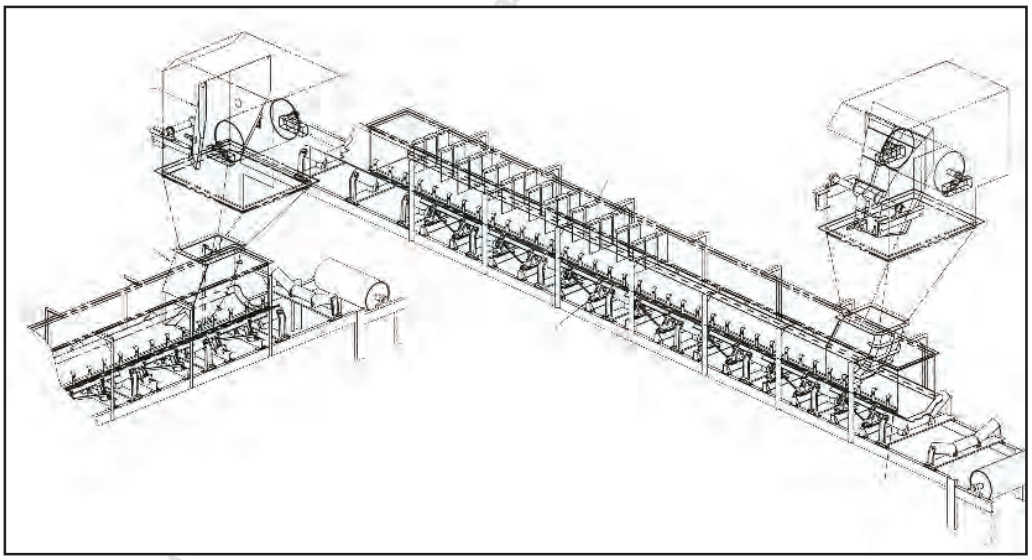

Figure 12.41
Passive containment and controlled flow transfer points

Dust Suppression and Collection Conclusion

Each method of dust control can be equally effective if applied correctly. A designer must balance the benefits of each system with the needs of the process and environment. When compared, the differences in labor upkeep, thermal penalty, and additional overhead for each method, the preferred method of controlling dust will become apparent.

CONTROLLED FLOW CHUTES

The design goal for "hood and spoon' chutes is to control all of the material by continuous sliding along a curved profile. This usually means consolidating the flow stream laterally so that the flow steering surfaces are 3 dimensional. If the discharging conveyor is fast enough to provide a trajectory, an in line "hood" is used which is then downwardly curved. The spoon is similar but the material enters on a downward path but exits somewhat horizontally. The curvatures are made by rolling steel or in segments with small

angles between them. The entry of both the hood and spoon are wider than flow stream entering them so as to collect and consolidate the flow. The funneling hood and spoon are located close to tangent to the entering flow velocity to minimize impact pressures and slow the flow before it is consolidated. Similarly, the stream is turned gradually to maintain velocity and minimize wear.

$$V_b = \tan(\theta_i) \times V_y$$

Equation 12.42
V_b, Bulk material transfer velocity

Where:

V_b = Receiving belt velocity
V_y = Vertical component of discharge chute material flow
θ_i = Discharging chute cut off angle (deg)

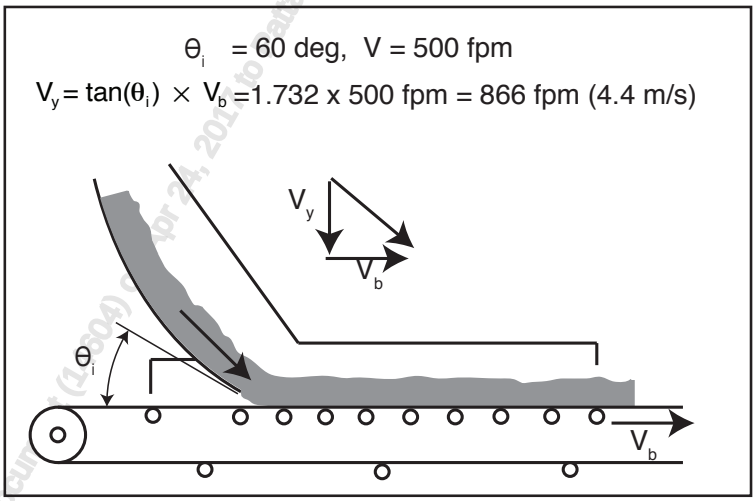

Figure 12.43
Example, vertical material velocity needed to match horizontal velocity to belt speed

The discharge from these controlled flow chute components is designed so that the exit velocity vector is parallel to the next component or belt and is, as close as possible, at the receiving belt speed to minimize turbulence, dust and spillage. In typical applications this type of transfer does not utilize dust suppression or dust collection, and in some applications open skirting has been successful. In difficult applications these systems may require sealing between components, fully enclosed skirting arrangements, and fogging sprays. For controlled flow chutes to be successfully applied several conditions must be met. Some of the conditions are dictated by the design and some are dictated by the bulk solid. The major criteria for a successful application of controlled flow technology are:

- There must be sufficient fall height to turn the flow stream gradually resulting in an exit velocity vector parallel to and approximately equal to the receiving belt velocity. See table 12.114 for vertical velocities at various drop heights and fall times. Use $V_y = 2 \times V_b$ as a starting point for design.
- After being turned by the hood, the fall height should not be so great that spoon and belt abrasion caused by the fast material stream become the dominant design issues.
- The material properties must be reasonably consistent. If material variations are expected, the design should accommodate the worst case conditions. Wear can be expected on hoods and spoons so replaceable wear liners for the hoods and spoons are commonly provided.

www.CEMAcraft.com, 2 issued this document (1504) on Apr 24, 2014 to Saeraphon Sitrakool, Seanluang, , Thailand

Most transfers are constrained by non-ideal; head pulley locations, heights, offsets, angles, slopes etc. Nonetheless, custom designed hoods and spoons can usually be configured to balance the design and provide successful operation, especially if flow simulation tools such as DEM are used to iterate the details. It is best if geometry of the transfer from belt to belt is ideally an in line transfer. The most difficult transfers are those with much greater than a 90 degree interface angle between the discharging and receiving conveyors. Even with difficult configurations, by allowing enough drop height and proper location of the head pulley, the flow can be consolidated into a compact cross section by the hood and directed vertically downward into a spoon which can turn the flow in any direction so that the discharge is in line with receiving belt.

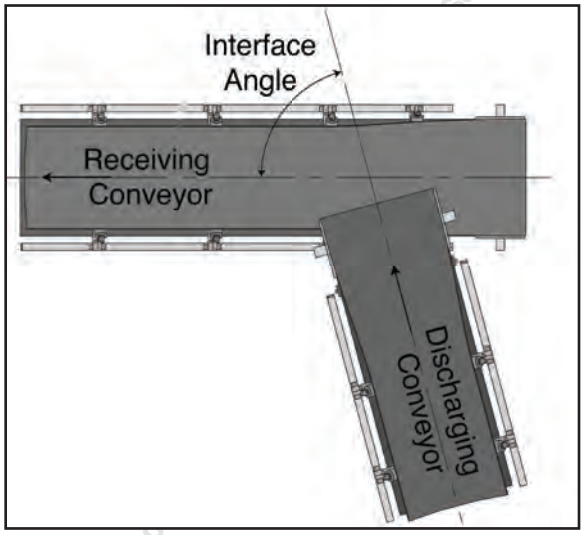

Figure 12.44
Transfer interface angle

The discharge of the spoon to the receiving belt is more reliable if the spoon cut off angle is steep enough so that bulk materials do not build up and harden on the end of the spoon when flow stops. Cut off angles are typically designed 5 degrees greater than the angle of wall friction. This often limits the discharge velocity and may be less than 5 degrees as a justifiable compromise. Contact a CEMA Member for additional details and help with hood and spoon geometry.

SKIRTBOARDS

To retain the material as it settles on the belt after it leaves the transfer chute and to settle any dust particles back onto the belt, extended skirtboards are often necessary. These skirtboards usually are an extension of the sides of the lower chute and extend roughly parallel to one another for some distance along the conveyor belt. The skirtboards normally are made of steel and lined with a wear liner material.

The lower edges of the skirtboards are positioned some distance above the belt. The gap between the skirtboard bottom edge and the belt surface is sealed by a flexible elastomer sealing strip, attached or clamped to the exterior of the skirtboard.

To avoid the entrapment of material lumps between skirtboards, wear liners, sealing strips, and belt, the skirtboards should be installed so they taper outwards as well as taper upwards in the direction of belt travel providing increased clearance from the belt. The gradual widening and raising of the skirtboards over the entire length of the transfer point, provides a relief mechanism for any material that could become entrapped and risk gouging or abrading the moving belt. Rather than being pinched between

the skirtboard or lining and the belt, the lumps of material are pulled free by belt motion. It is critical that these openings form a smooth straight line, without any jagged or saw-toothed pattern, which could capture material. Commonly used proportions and details of skirtboards and elastomer sealing strips are as follows.

Spacing of Skirtboards

The recommended CEMA distance between skirtboards is two-thirds the width of a troughed belt, (0.67 × BW). However, it may desirable to increase or reduce this spacing to provide adequate edge sealing distance and belt mistracking allowance. Contact a CEMA Member for specific recommendations for edge sealing requirements. Other factors such as the depth of material sliding on the skirtboards or the type of skirtboard wear liner have an effect on skirtboard spacing.

For free flowing materials, such as grain, skirtboard spacing is often reduced to one-half the width of the troughed belt (0.5 × BW) to prevent spillage on the carrying run. On flat belts the space between the skirtboards may be only a few inches less than the belt width depending on how well the belt is trained centrally, how well it is supported by idlers or a slider bed beneath the belt and how effectively the edge sealing system is maintained. Such spacing commonly is used when handling damp or prepared molding sand, or similar materials with minimal slump upon leaving the skirted end of the loading area.

Length of Skirtboard Extension Beyond Load Zone

Usually, when the loading is in the direction of the troughed belt travel the skirtboard length is a function of the difference between the velocity of the loading material in the receiving belt direction, at the moment the material reaches the belt, and obtains receiving belt speed. The skirtboard should be long enough to allow the load to attain the conveyor velocity and to settle into the surcharge profile it is to maintain for the rest of its conveyor journey. The acceleration length to make up the difference in velocity is directly affected by the friction between the receiving belt and the bulk material minus the tangent of the conveyor slope. Bulk material sliding on the skirtboard walls has an additional retarding effect.

$$L_a = \frac{V_b^2 - V_{ey}^2}{2 \times g \times (\mu_b - \tan(\theta))}$$

Equation 12.45
L_a, length required to accelerate bulk material to receiving belt

Where:

L_a = Distance to accelerate bulk material to receiving belt speed
g = Acceleration due to gravity
μ_b = Effective coefficeint of friction between bulk solid, skirtboards and belt
θ = Angle of inclination of receiving conveyor
V_b = Velocity of receiving belt
V_{ey} = Vertical velocity of bulk material as it leaves discharging chute

For installations where the velocity difference is small and the receiving conveyor flat, the length of the skirtboard can be 2 ft for each 100 fpm (1.2 m per 1.0 m/s) of belt speed, with a minimum length of

WWW.CEMANET.ORG has issued this document (1460) on Apr 2, 2017 to Pasakorn Sritakul (psritakul@gmail.com, , Thailand).

3 ft (1.0 m) past the loading chute. The affect of incline, friction and speed can result in a temporary reduction in capacity of the receiving belt until the load comes to speed on the receiving belt resulting in a back up or pooling of material resulting in spillage and/or pluggage of the transfer point. When the receiving belt is inclined, the friction between the belt and material is low and belt speeds moderate to high, additional skirtboard length is required. The need for a dust suppression or collection system may require an increase in the length of skirtboard for installation and proper operation.

Where belt conveyors with trippers are arranged with inclined loading sections, the skirtboards should extend to the bend pulley or to the first of the group of idlers at the convex vertical curve. This is done to maintain the shape of the material load on the belt, right up to the beginning of the curve. Skirtboards preferably should terminate above an idler rather than between idlers.

In cases where the material tends to roll or bounce backwards, it is recommended that the skirtboards extend along the entire length of the conveyor. The penalty for increasing the length of skirtboards is the additional maintenance of wear liners and sealing strips and the increase of power consumption due to the friction of the sealing system.

Height of Skirtboards

The height of skirtboards must be sufficient to contain the material volume as it is loaded on the belt. Tables 12.47 and 12.48 list accepted, minimum uncovered skirtboard height for 20, 35 and 45 degree three-equal roll troughing idlers. The requirement to control airborne dust driven off by the forces of loading material will require covers and may require an increase in the height of skirtboard to keep air velocities low. In addition these systems may require the lengthwise extension of the skirtboard and its cover, as well as the use of mechanical systems for dust suppression and/or collection. The cross-sectional area of the skirtboard for dust control is often calculated on 200 to 250 fpm (1.0 to 1.3 m/s) exit air velocity.

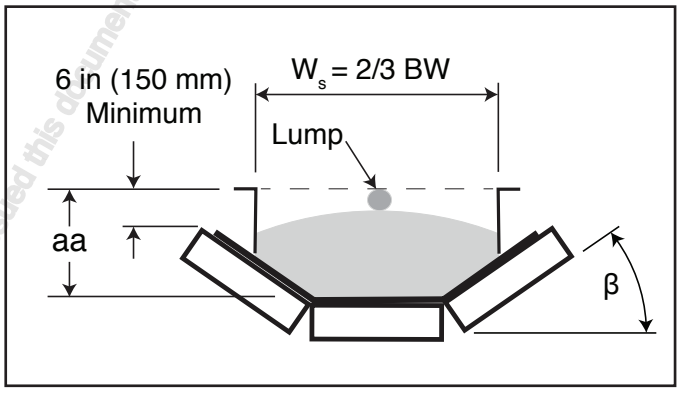

Figure 12. 46
Suggested open top skirtboard height

Note:
Previous versions of this manual did not include additional height for lumps or minimum clearance for skirtboard seal installation and maintenance in aa.

WWW.CEMANET.ORG has issued this document (1466) on Apr 24, 2017 to Patterapol (Strakan) Sirivaidyapong, Strakan

Belt Width in (mm)	aa = Minimum Uncovered Skirtboard Height in (mm)								
	Lump Size, in (mm)								
	2* (50*)	4 (100)	6 (150)	8 (205)	10 (255)	12 (305)	14 (355)	16 (405)	18 (460)
18 (500)	7 (180)	9 (230)	11 (280)						
24 (600)	7.5 (190)	9.5 (240)	12 (300)	14.6 (375)					
30 (800)	7.8 (200)	10.3 (260)	13 (330)	15.6 (400)	18.3 (465)				
36 (1000)	8.7 (220)	11.3 (285)	14 (355)	16.6 (425)	19.3 (490)	22 (560)			
42	9.7 (250)	12.3 (310)	15 (380)	17.6 (450)	20.3 (515)	23 (585)	25.6 (650)		
48 (1200)	10.7 (270)	13.3 (335)	16 (405)	18.6 (475)	21.3 (545)	24 (610)	26.6 (675)	29.3 (745)	
54 (1400)	11.7 (295)	14.2 (360)	17 (430)	19.6 (505)	22.3 (565)	25 (635)	27.6 (700)	30.3 (770)	33.2 (845)
60 (1600)	12.7 (320)	15.3 (390)	18 (455)	20.6 (525)	23.3 (595)	26 (660)	28.6 (725)	31.3 (795)	34.2 (870)
72 (1800)	14.7 (375)	17.3 (440)	20 (465)	22.6 (575)	25.3 (645)	28 (710)	30.6 (775)	33.3 (845)	36.2 (920)
84 (2000)	16.7 (425)	19.3 (490)	22 (555)	24.6 (625)	27.3 (695)	30 (765)	32.6 (830)	35.3 (895)	38.2 (970)
96 (2400)	18.7 (475)	21.3 (540)	24 (610)	26.6 (675)	29.3 (745)	32 (815)	34.6 (880)	37.3 (950)	40.2 (1020)
108 (2800)	20.7 (525)	23.3 (590)	26 (660)	28.6 (730)	31.3 (795)	34 (865)	36.6 (930)	39.3 (995)	42.2 (1070)
120 (3000)	22.7 (575)	25.4 (645)	28 (710)	30.6 (780)	33.3 (845)	36 (915)	38.6 (980)	41.3 (1050)	44.2 (1120)
* For material that is all fines use skirtboard heights in the 2-inch (50 mm) lump size column									

Table 12.47
aa, Minimum uncovered skirtboard height for 20° three equal roll troughing idlers

WWW.CEMANET.ORG has issued this copy (14004) on 6 Jan 2006 to Prabhakar Shrikhol, Skanska, Finland

Belt Width in (mm)	aa = Minimum Uncovered Skirtboard Height in (mm)								
	Lump Size, in (mm)								
	2* (50*)	4 (100)	6 (150)	8 (205)	10 (255)	12 (305)	14 (355)	16 (405)	18 (460)
18 (500)	9.0 (230)	11.0 (280)	13.0 (330)						
24 (600)	9.5 (240)	11.5 (290)	14.0 (355)	16.6 (420)					
30 (800)	10.8 (275)	12.8 (325)	15.5 (390)	18.1 (460)	20.8 (530)				
36 (1000)	11.7 (295)	14.3 (360)	17.0 (430)	19.6 (500)	22.3 (565)	25.0 (635)			
42	13.2 (285)	15.8 (400)	18.5 (465)	21.1 (535)	23.8 (605)	26.5 (675)	29.1 (740)		
48 (1200)	14.7 (375)	18.3 (440)	20.0 (510)	22.6 (575)	25.3 (640)	28.0 (710)	30.6 (775)	33.3 (440)	
54 (1400)	16.7 (425)	18.8 (475)	21.5 (550)	24.1 (610)	26.8 (680)	29.5 (750)	32.1 (815)	34.8 (880)	37.7 (960)
60 (1600)	17.7 (450)	20.3 (515)	23.0 (580)	25.6 (650)	28.3 (720)	31.0 (790)	33.6 (855)	36.3 (920)	39.2 (1000)
72 (1800)	20.7 (525)	23.3 (590)	26.0 (660)	28.6 (725)	31.3 (795)	34.0 (865)	36.6 (930)	39.8 (1010)	43 (1090)
84 (2000)	23.7 (600)	26.3 (665)	29.0 (740)	31.6 (805)	34.3 (870)	37.0 (940)	41.6 (1055)	43.2 (1100)	46.7 (1190)
96 (2400)	26.7 (675)	29.3 (745)	32.0 (810)	34.6 (880)	37.3 (950)	40.0 (1015)	42.6 (1080)	46.6 (1180)	50.5 (1280)
108 (2800)	29.7 (755)	32.3 (820)	35.0 (890)	37.6 (955)	40.3 (1025)	42.0 (1070)	45.6 (1160)	49.6 (1260)	53.5 (1360)
120 (3000)	32.7 (830)	35.3 (895)	38.0 (965)	40.6 (1030)	43.3 (1100)	46.0 (1170)	48.6 (1235)	52.6 (1340)	56.5 (1435)
* For material that is all fines use skirtboard heights in the 2-inch (50 mm) lump size column									

Table 12.48
aa, Minimum uncovered skirtboard height for 35° and 45° three equal roll troughing idlers

Downloaded by [illegible] for 24 days to [illegible], Sterling, Virginia

Skirtboard Covers

Skirtboards can be covered to minimize dusting and escaping lumps. The skirtboard must be high enough to contain the system's peak load and maximum lump sizes. The top edges of the skirtboards can be externally flanged, and the cover fastened to these flanges. If skirtboard covers are used, especially on skirtboards for inclined belt conveyors, the portion of the cover adjacent to the feed chute should be generously slanted to meet the chute. This is necessary to make room for turbulent material that is not yet moving at belt speed and thus avoid a jam in the material flow at the end of the feed chute. Designs for optimum control of dust typically specify skirtboards be enclosed, extended in height and length, and may also require the connection of dust suppression or collection systems. Where it is anticipated that skirtboard covers my be walked upon during maintenance they must be designed to handle the additional load. Designing the skirtboard covers for easy removal and replacement increases the probability that they will be replaced after maintenance or cleaning.

Skirtboards for Intermediate Loading Points

Where a belt is loaded at more than one point along the conveyor's length, care must be used in the arrangement of the skirtboards at the intermediate loading points. Because the load of the material tends to flatten and spread as the belt moves, skirtboards at intermediate loading points must be designed to let previously loaded material pass freely. Usually, intermediate-loading chutes are sequentially narrower, with a generous clearance above the profile of the previously loaded material.

The bulk material from additional load points must be centered on the belt and placed on top of the earlier load to minimize spillage. Spillage may occur at intermediate loading points, even with the most careful design of the skirtboards, because of fluctuations in initial loading.

Often, when loading points are relatively close together, it is better to continue the skirtboards between the loading points than to invite fugitive material problems, which can be created by use of relatively short lengths of skirting at the intermediate loading points. Continuous skirtboards are good insurance against spillage.
Sometimes the use of a wider-than-normal belt or a more deeply troughed belt will facilitate loading without spillage at intermediate loading points.

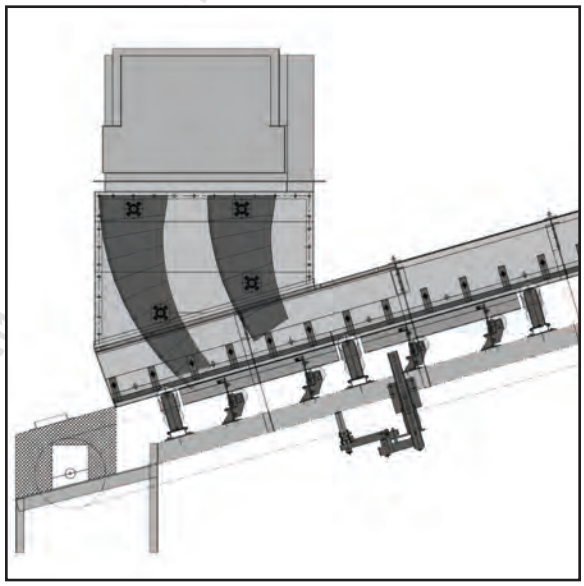

Figure 12.49
Multiple loading points

Skirtboard Clearance Over Belt

To minimize fugitive material, skirtboards should come as close to the belt as possible, consistent with safe operation of the belt. This clearance should increase uniformly in the direction of belt travel. The steadily increasing gap permits lumps or foreign objects to move forward without becoming jammed between the lower edge of the skirtboards and the belt. Greater clearance can be used, but this necessitates wider and thicker rubber-edging strips to resist the side pressures of the flowing bulk material. Spacing convention varies by industry. For a well designed and maintained system the initial gap can be as little as 0.38 in (10 mm) and slope gradually in direction of belt travel to 1.0 in (25 mm). On reversing belts the skirtboard clearance should not be sloped.

www.HELPER.ORG has issued this document (
Patcrapon Chaekod, Siriluan Thaeng

Skirtboard Sealing Strips

To prevent the leakage of fines through the clearance between the lower edge of the skirtboards and the moving belt, it is common practice to edge the skirtboard exterior with a flexible sealing strip. These strips, typically an elastomer such as rubber or urethane, are connected to the skirtboard in such a manner to allow for adjustment due to wearing.

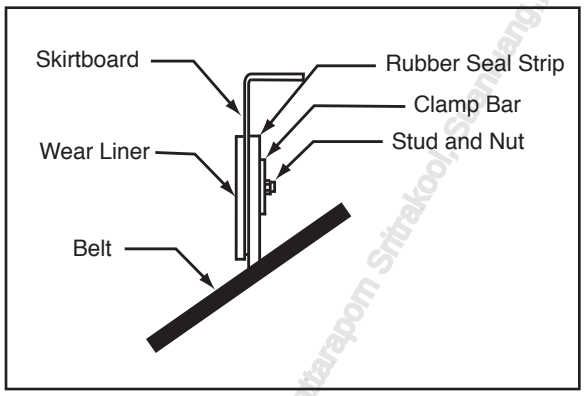

Figure 12.50
Simple adjustable skirtboard and sealing system

Strips of used conveyor belting should never be used for a skirtboard seal, as the belt carcass may have picked up abrasive fines, which can damage the cover of the moving belt. Sealing strips can be installed vertically or at an angle; they can be installed so they seal on the outer edge of the belt, or so they turn back under the skirtboard (also known as tangential skirting). Edging installed at an angle provides a better seal between idlers as the belt flexes under load. However, care must be exercised in design to combine good sealing with minimizing friction and belt cover wear. Many types of proprietary sealing systems that have been developed to improve sealing, adjust automatically and reduce maintenance time.

Where the characteristics of the bulk material permit, such as uniform lump sizes greater than 1 inch (25 mm) with no fines, the elastomer sealing strip can be omitted, but only if the skirtboards are not too close to the edge of the belt. Skirtboard edge sealing strips should be adjusted frequently so that the seal just touches the belt surface. Forcing the strip hard against the belt cover can require additional power to move the belt and groove the belt. On conveyors with continuous skirtboards, improper pressure of rubber skirtboard edging may overload the motor driving the conveyor belt.

There are many theories on the hardness required for skirtboard seals. In general, the hardness of the seal should be sufficient to allow it to perform its designed mechanical function. More important than hardness is the selection of a skirtboard seal abrasion resistance so that the seal is sacrificial and wears before wearing the belt.

Damage near the edge of the belt below the skirtboard is often blamed on the sealing system. However, this damage may not always be the result of too much sealing pressure, but rather abrasion from material entrapped in pinch points. The careful installation of liners, skirtboards, and sealing strips so they form a smooth line, without jagged or saw tooth edges, and gradually open in the direction of belt travel can go a long way to eliminate this entrapment damage to the belt. Minimize belt sag in the load zone to improve sealing and reduce belt grooving. Loading on the transition should be avoided as it can create an entrapment point and sealing on the varying geometry in the transition is difficult.

www.CEMANET.org is issued for comment (2018-03-14, 2017-09 Patcharapom Sritrakool, Siam Cement, , Thailand

Friction Against Skirtboards

The additional conveyor power required to overcome the friction of the bulk material against the skirtboards and to overcome the friction of the skirtboard sealing strips against the belt is discussed in Chapter 6.

WEAR LINERS

Transfer chutes should be lined on flow surfaces with a material providing good abrasive wear resistance so that this liner, not the chute itself, is the sacrificial element. The type of liner material must be compatible with the bulk material being handled. Depending on cost of lining material as well as ease of attaching to the chute walls, the selection is almost always some sort of compromise. Table 12.51 shows a range of materials currently used as chute linings and some of the characteristics of the materials. This table is taken from MHEA's "The Design of Transfer Chutes & Chute Linings", with minor revisions and the following text is also based primarily on the information included in the MHEA document.

Lining Material	Initial Cost	Sliding Abrasion Resistance	Impact Resistance	Temperature Resistance	Low-Friction Quality	Ease of Fabrication
Alumina Tiles	High	Excellent	Good	Excellent	Very Good	Good
AR Plate	Low	Very Good	Good	Very Good	Poor	Good
Carbon Steel	Medium	Very Good	Good	Very Good	Poor	Excellent
Chromium Clad-plate	High	Excellent	Excellent	Very Good	Poor	Good
Corrosion Resistant Stainless Steel	Medium	Good	Good	Very Good	Very Good	Good
High Cr Cast Iron Tiles	High	Excellent	Excellent	Very Good	Very Good	Very Good
Mild Steel	Low	Good	Good	Very Good	Poor	Excellent
Polyurethane	High	Very Good	Excellent	Poor	Poor	Excellent
Quarry Tiles	Low	Good	Poor	Good	Good	Very Good
Rubber	High	Good	Excellent	Poor	Poor	Very Good
Stainless Steel - polished	High	Good	Good	Excellent	Very Good	Very Good
UHMW	Medium	Good	Poor	Poor	Excellent	Excellent
Vitrified Tiles	Low	Very Good	Poor	Very Good	Very Good	Excellent

Table 12.51
Characteristics of wear liners

Alumina Tiles

Alumina ceramic tiles are widely used to combat sliding abrasion in chutes and hoppers where impact resistance is not a requirement. This product is particularly suited to clean crushed coal handling. High Alumina Ceramic is a tough wear resistance material with aluminum oxide of 85% to 95% content. Hardness is 9.0 Moh (second only to diamond which is 10 Moh). These tiles have no water absorption and high chemical resistance. Even small variations of the height of the tiles can create a ledge for build up to start. Fixing is usually by epoxy and specialists to ensure correct bonding and alignment should carry out the tile installation.

AR Plate

There are many branded abrasion resistant low alloy steels available offering resistance to both impact and abrasive wear. These are mostly of low Nickel/Chromium/Molybdenum composition with hardness

www.cemaNET.com has issued this document (14604) on May 2017 to Patarapon Srisopon, Siphuang, , Thailand

in the range 300 to 500 HB. These steels are consequently much more difficult to fabricate and form into the more complex chutes compared with mild steel and while the raw material cost may range from that of mild steel plus 50% to 100%. Fabrication cost can be substantially more. In view of the difficulty and costs of fabrication, the use of alloy steel liners is often limited to flat impact areas where its benefits can best be exploited at minimal cost or on areas where flat plate work or panels can be arranged with fixing by countersunk bolts or welded studs. The alloy steels offer similar friction properties to mild steel but are generally somewhat less prone to rusting and corrosion, reducing bulk material build-up potential.

Carbon Steel

Carbon steel plate is available in a range of qualities (0.30%C to 0.50%C) offering improved hardness from 150 HB to 250 HB and hence better wear resistance than mild steel. The material is slightly more difficult to form and fabricate than mild steel and likely to cost from 25% to 50% more.

Clad Plate

Clad plate is for applications subject to severe abrasion and impact, such as iron ore applications. Clad plate is manufactured by depositing a very hard layer of high carbon chromium iron on to a mild steel backing plate using a welding process. The surface has good oxidation resistance. The composition of the deposit can be amended by the addition of alloying elements and hardness is generally greater than 600 HB. Cutting of the plate is best carried out using a plasma cutter and it is usually difficult to machine. Plates can be welded inside chutes using the mild steel backing, by stud welding or manufacturer's can supply the material pre-drilled. This liner material is not recommended for use in a corrosive environment since the surface cracks allow the corrosive medium to reach the mild steel backing plate.

Corrosion Resistant Stainless Steel (12% Chromium)

Proprietary brands of corrosion resistant/Martensitic stainless steel plate are available based on compositions containing 12% CR. These offer a competitively priced product for use in handling damp bulk materials where corrosion resistance is an essential feature in maintaining satisfactory flow. Material cost is in the order of 3 times that of mild steel.

Hardness ranges from 200 HB to 400 HB, the increased hardness available in some brands giving increased abrasion resistance – but these being more difficult to form and fabricate – the difficulty increasing with hardness. These steels offer good flow, low-friction properties with resistance to corrosion and impact with abrasion resistance largely depending on the hardness. Fixing is usually by holes through the lining with bolts or welding to the chute backing. Alternatively, studs welded to the back of the lining sections.

High Chrome Cast Iron Tiles/Ni-Cr Tiles

Traditionally, Ni/Cr white cast iron tiles have been widely employed over many years as chute linings in a variety of steelworks and mineral ore handling projects to combat severe wear by sliding abrasion. These tiles usually, 4% Ni and 2% Cr, have offered an effective and conveniently applied product to combat severe sliding abrasion while high chrome cast iron tiles (25% Cr, 3%C) offer a product more suited to withstand moderate impact in addition to having a very high level of abrasion resistance.

WWW.CEMENTPLANET.COR Restricted use of document (1414-4) on 12-Apr-2017 by Paparapom Sirakul, Suanluang, Thailand

Mild Steel

Mild steel plate is the traditional material from which many chutes are manufactured being ductile and offering ease of fabrication and forming into complex shapes with good structural strength at a moderate price. Mild steel liners can be added to the chute work in appropriate wear locations to facilitate replacement and avoid wear to the main structure. Liners are usually fixed by countersunk bolts giving smooth lines to the chute surface. They may be polished to improve material flow but are usually allowed to 'work polish' in operation. Mild steel suffers from its inherent propensity to rusting and corrosion and is very prone to build-up of damp fines in areas outside the mainstream flow. Steep chute angles are required to counter this situation. Having a Brinell hardness of approximately 150, mild steel is only moderately resistant to impact and abrasive wear and in heavy impact situations it is usual to employ bar or rail reinforcement on the sliding surfaces to promote captive build-up of fines as a cushion against the wear. The axis of the bars or rails is made in-line with the material flow to assist flow.

Polyurethane

Polyurethane is a tough smooth plastic material which can have the full resilience of natural rubber or be of graded hardness with improved wall-friction properties and abrasion resistance said to outlast some of the toughest rubbers in chute applications. The sheet form often incorporates metal or fabric stiffening, similar to rubber linings. In its cured state, polyurethane is non toxic and grades suitable for use in food industry are available. It has good chemical resistance and can be used in applications down to -58 °F (-50 °C). Maximum operating temperature should be limited to 122 to 158 °F (50 to 70 °C). Polyurethane can be flammable, so applications must be carefully assessed.

Quarry Tiles

These are a low cost product offering resistance to abrasive wear in the absence of impact. Fixing is by cement or epoxy. Initially the tiles offer a smooth surface with low friction but subsequent wear of the grout lines can cause problems by creating a place for build up to start..

Rubber/Synthetic Rubber

Rubber is used as a liner material, and can come in many forms. Shore A Hardness of 60 is appropriate for most applications. The ability of rubber to sustain impact wear is dependent on its resilience to cushion or absorb the impact and hence the thickness of rubber at the impact point and the direction of the impacting material are of importance. On a plain rubber surface, best resistance to impact damage is obtained when the impact angle is 90 degrees and approach angles of 30-45 degrees should be avoided. The method of fixing the rubber lining in the impact area must be very secure. Experience indicates that bolted fixings for rubber sheeting may fail due to movement and stretching of the rubber with subsequent bulging away from the backing plate unless the rubber lining incorporates a metal or fabric stiffening layer to hold the lining stable.

Stainless Steel

Austenitic Stainless steel (17%-18% Cr) is available in a number of grades to suit the differing requirements of the industries in which it is employed, grade 304 being available in sheet form in a range of thickness up to 4 inches (100 mm) and being suitable for most bulk material handling applications outside the chemical/food/pharmaceutical industries. Grade 316 stainless steel is available in similar sheet form and is an acceptable material for most food/pharmaceutical applications. For chute work, a "polished" surface finish is usually adopted, available from the mill or by mechanical buffing/polishing

www.bzfxw.com Document (3484) on Apr 24, 2021 to Nattapom Sriwarod, Suburban Thailand

of the surface after fabrication. Stainless steel offers a low wall friction when handling many of the more difficult materials and inherently avoids problems from rusting and corrosion and, in the grades indicated, can be easily formed and fabricated into chute work from using modern manufacturing methods and machinery.

Stainless steel suffers from its inherent cost – the raw material cost being 3 to 4 times that of mild steel – and it is thus mostly limited to applications where thin linings are tolerable to meet low slip requirements and where its improved abrasion resistance by comparison with mild steel is of benefit. Fixing is usually by countersunk bolts or welding onto the mild steel backing plate work of the main chute structure but care needs to be exercised in accommodating countersunk fixings with thin liner plates. Instead of providing a stainless steel liner plate, entire dribble chutes are often constructed from this material so that the chute wall itself acts as a good sliding surface.

Proprietary composite lining sheets are available comprising stainless steel sheeting with a bonded rubber backing offering the low-slip properties of stainless steel with improved impact resistance due to the cushioning offered by the rubber backing at impact areas. This composite lining also assists fixing by countersunk bolts by indenting the metal lining into the rubber backing. This material can also be fixed by rubber adhesives onto the backing chute work.

UHMW

Ultra High Molecular Weight Polyethylene (UHMW) is common as a chute and hopper lining material for lighter duty applications. It is a tough material of relatively low cost, which can be easily cut and shaped. UHMW has good resistance to sliding abrasion and a low coefficient of friction and has particularly good non-stick properties, which greatly assist in the handling of damp and sticky materials. It is available in food quality grades and reduces noise. This material cannot handle impact and wears rapidly under impact conditions. It is not suited to handling highly abrasive materials. It will not operate at temperatures in excess of 212 °F (100 °C) and will soften and melt. It is flammable and burns to give off toxic fumes and the potential fire hazard has to be considered against its application. UHMW has a higher coefficient of thermal expansion than traditional metal liners which must be taken into consideration in the design and fixing of UHMW as a liner material.

UHMW is available in different grades and by the use of additives such as glass fibers or beads it is possible to improve the abrasion resistance. Proper fixing of the UHMW liners is essential. Incorrect or insufficient number of fasteners is the most common cause of failure. Countersunk head screws are recommended and should not be more than 8 inches (200 mm) apart around the edge of each sheet. Steel plate work backings should be treated prior to lining with a rust inhibiting compound which will also assist in preventing ingress of material behind the lining. On large areas, intermediate fixings should be made at no more than 12-inch (300 mm) pitch.

Vitrified Tiles

Vitrified tiles are low-grade ceramics fully sintered and vitrified by kiln. They are used where low friction is required combined with sliding abrasion resistance in relatively light duty applications. They are used more in bins and hoppers than in transfer chutes.

WWW.BZANET.COM All rights reserved. Unauthorized copying or distribution is prohibited. Copyright (c) 2017 to Patsakorn Sritrakool (Garnet@BZA), Thailand

DRIBBLE CHUTES

The collection of fines from belt cleaning devices on the feed conveyor can present a major problem at the transfer point, which needs to be carefully considered. With belt scrapers located on the discharge pulley, or close behind, it is often possible to collect the fines within the main transfer chute or to provide a separate "dribble chute" specifically for this purpose. For a discussion of belt-cleaning devices, see Chapter 11. Collecting the fines is an important part of the whole transfer system design and these "dribble chutes" generally require steeper chute inclination angles and low-friction lining to avoid build-up. In some cases, where there is inadequate room for steep enough angles of dribble chutes, it is necessary to install a vibrating device to induce flow or an auxiliary conveyor to transport the fines back into the main material flow.

OTHER DISCHARGE CHUTES

Materials carried by a belt conveyor can be discharged from the belt in different ways to affect certain desired results. The discharge can be accomplished at a definite point or points, or it can extend alongside the belt conveyor, on one or both sides, for considerable distances. The flexibility of discharge arrangements of belt conveyors facilitates their use in the maximum fill of long bins and in the creation of large and variously shaped storage piles.

The simplest method of discharge from a conveyor belt is to let the material pass over an end pulley and fall onto a pile. By adding a suitable chute, such as a "batwing" the discharge can be directed, as desired, to a pile, a bin, or another conveyor. A fork in the discharge chute, with a flop gate or bucket diverter, will permit the material to flow simultaneously in two directions (on-line splitting) or alternately in either direction. If several specific points of discharge are required, the conveyor belt can be passed over fixed trippers, which will affect the discharge at these points. A movable tripper can be used to discharge material at many points on either side of the belt, or to one side, continuously or intermittently.

When a flat belt is used, it is possible to position plows at the desired discharge points and direct the material from the belt to either side or simultaneously to both sides of the belt. Such plows can be fixed in position, or can be movable to affect a wider range of discharge points. A troughed belt can be temporarily flattened to permit discharge by a plow.

Whenever the material is discharged over an end pulley, the speed of the belt and the diameter of the end pulley are factors, which determine the path of the discharged material. This path is called a trajectory. The shape of discharged material trajectories is important when designing discharge chutes, and when the material falls freely without a chute onto a stockpile.

Care in the design of discharge chutes will pay off in the successful operation of a belt conveyor. Ingenious combinations of discharge chutes and gates or diverters will facilitate diversion of the material in desired directions, collection of the material adhering to the belt, avoidance of spilled material, and control of dusting in the case of dry or powdery and fine materials. Various common discharge arrangements are illustrated in Chapter 2.

Discharge Over the End Pulleys

This simple discharge is commonly used. The trajectory of the discharged material should be investigated to ascertain where the material would fall. Provision must be made so that the pile will not rise to the end pulley and cause the cover of the belt to scrub against the top of the pile. Dusting of dry discharged material may be a problem.

www.BEARDT.ORG to issue this document (1455) on May 2, 2017 to [illegible] Krakow, [illegible] reserved



Figure 12.52
Discharge over the end pulley

Lowering Chutes

Where dusting and degradation are objectionable, lowering chutes are used for directing materials to storage. Four common forms of lowering chutes are illustrated and described as follows:

Spiral Lowering Chutes

Figure 12.45 shows the usual form of a spiral-lowering chute used for gently lowering fragile and/or dusty bulk materials.

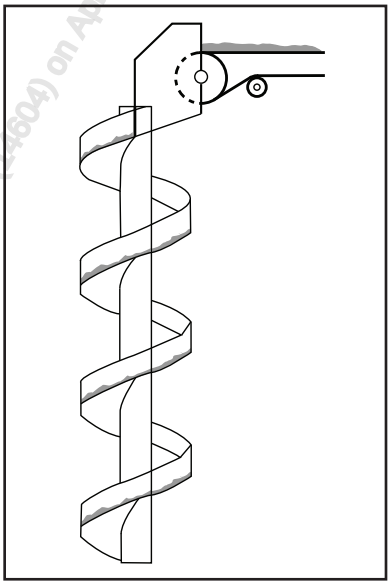

Figure 12.53
Spiral lowering chute

Bin Lowering Chutes

Straight, declined, inverted channel chutes run from the belt conveyor discharge point down into the bin, and are secured to the sloping side of the bin near the bin bottom. The slope of the chute to the horizontal must be 10 degrees to 15 degrees greater than the angle of repose of the material. Material will slide down these chutes quietly, without dusting, until it meets with the bin side or the surface of the material in the bin. There, the material will leave the chute and spread out conically. When properly arranged, these bin lowering chutes will mitigate dusting and fill the bin to its practical capacity.

WWW.CEMANET.ORG has issued this document (21604) on Apr 24, 2017 to Pitsarapom Sritrakul

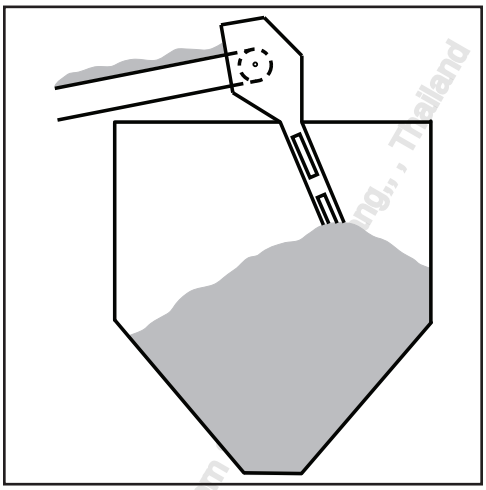

Figure 12.54
Bin lowering chute

Rock Ladders

Many specifications do not permit breaking, crumbling, or degrading rock as it is delivered to a stockpile by the belt conveyor. Good practice calls for the installation of a "rock ladder" under the discharge point of the belt conveyor. The rock ladder is a structural steel (or wood) tower having a series of baffles arranged in such a manner that bulk material discharged from a belt conveyor never has a free drop of more than 5 feet (1.5 m). If the material is heavy, abrasive, and lumpy, the baffles can be arranged in the form of rock boxes. Note that rock ladders should not be used for combustible materials, such as dusty coal.

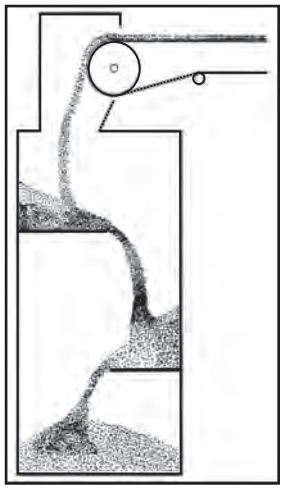

Figure 12.55
One form of a rock-ladder lowering chute

Telescopic Chutes

The telescopic discharge chute is used to minimize dusting when discharging to a pile. Telescoping sections usually are cable-connected in such a manner that a winch will successively lift the sections to keep the lower end of the chute just clear of the top of the storage pile. Materials that tend to be dusty are often delivered to storage piles through telescopic chutes.

WWW.CEMANET.ORG has issued this document (14604) on April 20, 2010 to Pattarapon [illegible] ng., , Thailand



Figure 12.56
Telescopic discharge chute

WWW.CEMANET.ORG Reissued this document (4.00) on Apr 24, 2017 to Pattarapo

FEEDERS

A feeder is a conveyor or other mechanism adapted to control the rate of delivery of bulk material. The purpose of this chapter is to establish the CEMA recommended conservative method for the selection, design and operation of belt conveyor feeders.

The cross-sectional areas and capacities given in Chapter 4, Tables 4.41 through 4.48 are based on a continuous, even flow of material. Some variations in the cross sectional area of the flow may be permitted, provided these variations do not appreciably affect the average flow. However, intermittent or irregular feeding of the material to the belt will result in alternating empty and overloaded portions of the belt. Such a condition usually causes a loss of capacity and, very likely, spillage of material over the edges of the belt along the overloaded portions. Some means of feed regulation must be employed, particularly when a belt conveyor is to be loaded from hoppers, bins, or piles. Material discharged to a belt conveyor from other conveyors requires only a suitable transfer chute. The rate of feed must be established somewhere in the conveying system. The most common method of varying the feed rate for belt feeders is by using a variable speed drive.

Feeders can be of various types, such as screw, belt, drag-scraper, apron, reciprocating plate, vibrating, rotary vane or drum, rotary disc, or table feeders. Apron, drag-scraper, and vane feeders provide a slightly pulsating feed, unless the spacing of the apron pans, drag-scraper bars, or vanes is small in comparison with the volume of material being fed. However, chutes from these feeders to the belt conveyor usually smooth out the pulsations. Retarding devices, suspended in such chutes, can help to reduce the pulsation peaks.

The choice of feeders depends upon the characteristics of the material handled, the manner in which the material is stored and the tonnage rate of feed.

Screw Feeders

A conveyor screw can be located at the bottom of a storage bin to control and regulate the flow of most materials uniformly and continuously, except those materials containing large lumps or highly aerated fines, or those which tend to pack.

Drag-Scraper Feeders (Bar Drag Feeders)

A drag-scraper feeder consists of a succession of plates or bars mounted between two strands of conveyor chain. The plates or bars drag along the bottom of a trough. A drag-scraper feeder is a simple and compact arrangement for controlling the feed of fine or small-lump material.

Apron Feeders

Apron feeders are used for handling abrasive, heavy, and lumpy materials. The material is carried on overlapping metal plates or "pans," mounted on or between strands of conveyor chain. The chains usually are fitted with rollers, which ride on metal tracks.

Reciprocating Plate Feeders

The reciprocating plate feeder is one of the oldest devices for feeding materials from bins or hoppers. This feeder consists of a reciprocally driven plate or pan, operating horizontally or slightly declined, and positioned under a head of material in a bin. The reciprocating element can be double-ended, arranged so that each end is under a separate opening in the same bin. Plate feeders will handle fines, a mixture of lumps and fines, or small-sized lumps.

Vibratory Feeders

A vibrating feeder consists of a pan or trough to which is imparted a vibrating motion so that the material is impelled in a definite, controlled flow. Normally, it is positioned under the opening in the bottom of a bin or a hole under a storage pile.



Figure 12. 57
Vibrating feeder

Vibrating feeders successfully handle a wide range of materials. However, their use should be avoided where the material is of such nature that it will stick to and build up on the surface of the pan or trough.

Rotary-Vane Feeders (Pocket Feeders)

A rotary-vane feeder consists essentially of a shaft-mounted vane or pocket within a snugly fitted, enclosed case. Rotary-vane feeders, also called pocket feeders, provide an intermittent feed of free-flowing fine or small-lump material.

www.CEMENT.ORG has issued this document (1 ... on Apr 14, 2017 to Pattaraporn Sirakool, Saraburi, , Thailand

Rotary-Drum Feeders

A drum feeder uses the natural forces of gravity to feed material onto the rotating drum and maintains consistent material flow under varying levels of moisture content. The feeder utilizes gates and a rotating drum to control the volumetric flow of material. Rotary drum feeders can be positioned either perpendicular or parallel to a collecting belt or other process equipment. A minimal number of moving parts increases uptime, and equates to increased throughput and a lower overall operating and maintenance cost.

The gate setting along with the relationship of the length and diameter of the drum, defines the active cross sectional area within the hopper. The rotational speed and opening gate height determines the feed rate. Drum rotation allows the material to be gently fed without retarding material flow, while minimizing surge loading, product degradation, dust generation and maintaining uniformity of material flow. The material flow can be shut off by either stopping the drum or by closing the gate. With consistent material, the gate and drum speed can be fixed. If material characteristics change,the flow of material can be changed by adjusting the throat area or varying the drum speed.

Bulk materials with an angle of repose up to 50 degrees consisting of fines or lumps up to 12 inches (305 mm) can be fed using rotary drum feeders. Drum diameters range from 10 to 108 inches (250 to 2,750 mm) with capacities from to 2 to 9,375 tph per foot of drum width (8 to 36,800 mtph per meter of drum width) are available.

Lump Size in (mm)	Typical Drum Feeder Capacities tph, per foot of drum width @ 100 lbf/ft³ (mtph per meter of drum width @1600 kgf/m³)									
	Drum Surface Speed, fpm (m/s)									
	5 (0.03)	10 (0.05)	20 (0.10)	40 (0.20)	50 (0.25)	75 (0.38)	100 (0.51)	150 (0.76)	200 (1.02)	250 (1.27)
0.13 (3.2)	2 (8)	5 (15)	9 (31)	19 (61)	23 (77)	35 (115)	47 (154)	70 (230)	94 (307)	117 (384)
0.25 (6.4)	5 (15)	9 (31)	19 (61)	38 (123)	47 (154)	70 (230)	94 (307)	141 (461)	188 (614)	234 (768)
0.5 (12.7)	9 (31)	19 (61)	38 (123)	75 (246)	94 (307)	141 (461)	188 (614)	281 (921)	375 (1228)	469 (1535)
1.0 (25)	19 (61)	38 (123)	75 (246)	150 (491)	188 (614)	281 (921)	375 (1228)	563 (1842)	750 (2456)	938 (3070)
1.5 (38)	28 (92)	56 (184)	113 (368)	225 (737)	281 (921)	422 (1382)	563 (1842)	844 (2763)	1125 (3684)	1406 (4605)
2.0 (51)	38 (123)	75 (246)	150 (491)	300 (983)	375 (1228)	563 (1842)	750 (2456)	1125 (3684)	1500 (4913)	1875 (6141)
3.0 (76)	56 (184)	113 (368)	225 (737)	450 (1474)	563 (1842)	844 (2763)	1125 (3684)	1688 (5527)	2250 (7369)	2813 (9211)
4.0 (102)	75 (246)	150 (491)	300 (983)	600 (1965)	750 (2456)	1125 (3684)	1500 (4913)	2250 (7369)	3000 (9825)	3750 (12281)
6.0 (152)	113 (368)	225 (737)	450 (1474)	900 (2984)	1125 (3684)	1688 (5527)	2250 (7369)	3375 (11053)	4500 (14738)	5625 (18422)
8.0 (203)	150 (491)	300 (983)	600 (1965)	1200 (3930)	1500 (4913)	2250 (7369)	3000 (9825)	4500 (14738)	6000 (19650)	7500 (24563)
10.0 (254)	188 (614)	375 (1228)	750 (2456)	1500 (4913)	1875 (6141)	2813 (9211)	3750 (12281)	5625 (18422)	7500 (24563)	9375 (30703)
12.0 (305)	225 (737)	450 (1474)	900 (2948)	1800 (5895)	2250 (7369)	3375 (11053)	4500 (14738)	6750 (22106)	9000 (29475)	11250 (36844)

Table 12.58
Typical drum feeder capacities

WWW.CEMATERIAL.COM Downloaded (2/5/24) on May 24, 2017 to Estera Apolinario Cuisia for Spanjuan, Nanette

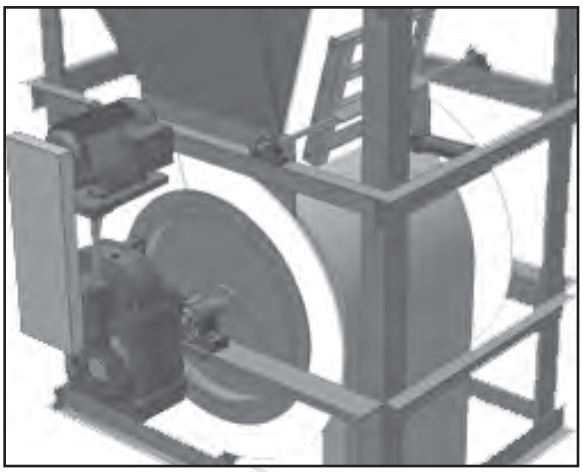

Figure 12.59
Angle of repose rotary drum feeder

Rotary-Table Feeders (Disk Feeders)

A rotary-table, or disc, feeder consists of a horizontal circular plate, with or without a central cone, rotating under a circular opening in the bottom of a conical bin or hopper. The material on the plate is plowed off by an adjustable blade and falls over the edge of the table or disc. Rotary-table feeders are used for materials that have a tendency to arch.

Traveling Rotary-Plow Feeders

Traveling rotary-plow feeders are suitable for use in tunnels, under storage piles, or under long storage bins. The plowing mechanism consists of a number of curved arms, operating on a vertical axis, and arranged to sweep material off a narrow shelf running the length of the storage pile or bin.

BELT FEEDERS

A belt feeder is a volumetric feeder using a conveyor belt to withdraw a designed cross sectional area of bulk solid from a large quantity of bulk solid in storage. Belt feeders are often problematic in that it is difficult to predict all the intermittent loads which may result in pluggage or the drive stalling. In addition the typically short feeder belts are often subject to rapid belt wear due to short cycle times. The purpose of this section is to establish the CEMA recommended conservative method for the selection, design and operation of conveyor belt feeders.

WWW.CEMANET.ORG Member Support document (1434) on 10/2/2014 to Pasarapol

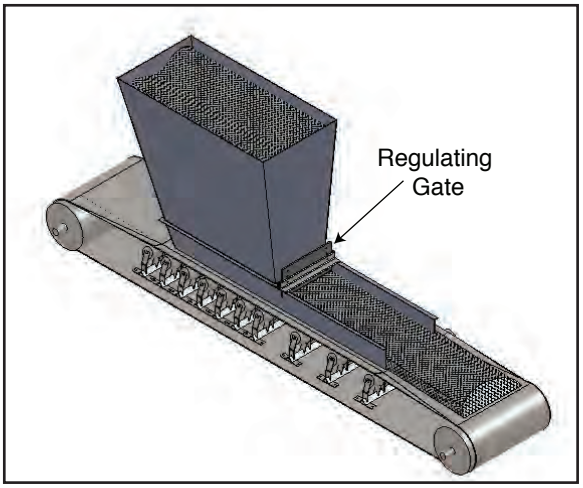

Figure 12.60
Regulating gate belt feeder with picking idlers

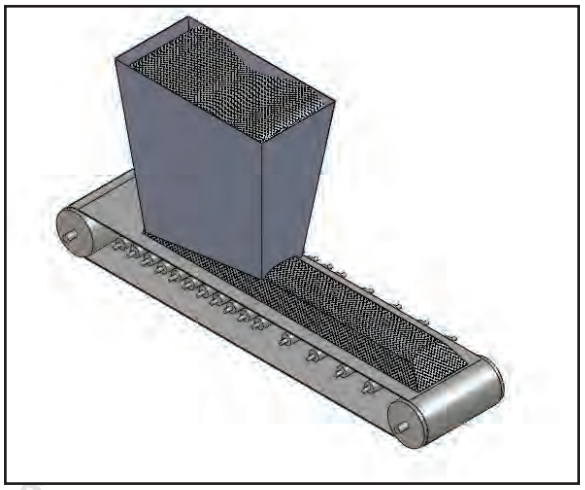

Figure 12.61
Mass flow feeder with flat live shaft idlers

Application Range

A belt feeder is usually a very short belt conveyor, installed under a storage facility. Generally, the belt has a flat, ribbed edge or is formed into a picking idler profile and is supported on closely spaced idlers or on a slider bed. Belt feeders are used extensively for handling fine, free flowing, abrasive, and friable materials. Belt feeders are relatively tolerant of tramp metals. Belt feeders are often a cost-effective solution, readily adaptable to automatic control of the flow rate by varying the belt speed. A feeder should be considered a dedicated conveyor used for withdrawal of material from storage and the practice of combining the feeder design in to the load point of a transport conveyor should be done with great caution. Improperly designed or operated feeders can be very problematic and attention to detail in the design, start up and operation is critical for satisfactory operation and life of the components.

The decision on when to use a belt feeder is based on a number of factors. The following is a general suitability guide based on accepted practice and classifying the bulk solid according to the CEMA Standard 550 Classification of Bulk Solids. Designs outside of these preferred design recommendations are possible and the combination of several miscellaneous properties could make the application unsuitable for belt feeder applications.

WWW.CEMANET.ORG has issued this product (0400 - 07) on 2017 to Patricia

	CEMA 550 Classification	Suitable for Belt Feeding?
Material Size		
Very Fine < 100 mesh	A	No
Fine 100 mesh to 1/8 inch	B	Yes
Granular 1/8 to 1/2 inch	C	Yes
Lumpy lumps over 1/2 inch	D	Yes
Irregular, stringy inter meshing	E	No
Flowability – Angle of Repose		
Very free flowing < 19 deg.	1	No
Free Flowing 20 to 29 deg.	2	Yes
Average Flowing 30 to 39 deg.	3	Yes
Sluggish > 40 deg.	4	No
Abrasiveness		
Non-Abrasive	5	Yes
Abrasive	6	Yes
Very Abrasive	7	Yes
Very Sharp cuts or gouges belt	8	No
Miscellaneous Properties		
Very Dusty	L	No
Aerates or fluidizes	M	No
Contains explosive dust	N	Yes
Contaminable	P	Yes
Degradable	Q	Yes
Harmful fumes or dust	R	Yes
Highly corrosive	S	No
Mildly corrosive	T	Yes
Hygroscopic	U	Yes
Interlocks or mats	V	No
Oils or chemicals present	W	Yes
Packs under pressure	X	No
Light or fluffy	Y	Yes
Elevated Temperature	Z	Yes < 450 °F (232 °C)

Table 12.62
Bulk material characteristics generally considered suitable for belt feeders

WWW.CEMANET.ORG has licensed this file to [illegible] (1464) on Apr 24, 2017 to Pattanakarn Sritrakool, Chiang Rai, , Thailand

Construction

There are generally accepted practices for the design of feeders for use in common applications. Belt feeders can be adapted to work satisfactorily outside the recommended design limits with special designs and in combination with auxiliary equipment. Consult a CEMA Member company for advice on the feasibility of design modifications for using belt feeders in special applications.

Belt Speed	**5 to 150 fpm**
Capacity	**Up to 100,000 ft³/h or 3,000 tph (2,800 m³/h or 2,700 mtph)**
Turndown Range	**Up to 10:1**
Belt Width	**18 to 120 in (500 to 3,000 mm)**
Design Belt Sag	**1/2 %**
Direct Impact	**Up to CEMA 575 heavy duty "H" rating**
Angle of Conveyor	**1 to 3 degrees declining preferred**
Trough Angle	**20 degree picking idlers or flat belt preferred**
Belt Direction	**Single direction preferred**
Hopper Outlet	**Slot or rectangular or circular when dia. < belt width**
Skirtboard Spacing	**Tapering to a maximum 2/3 belt width**
Maximum Lump	**1/5 Skirtboard spacing or 1/2 material bed depth**

Table 12.63
Belt feeder typical design limits

The design recommendations are based on using the feeder as a volumetric flow control device under a storage hopper or stockpile. The design of hoppers based upon material flow properties is well established. For a belt feeder to work properly the discharge of the hopper must be designed to prevent bridging, rat holes, direct impact or surge loads. Some of the flow values and material characteristics needed for hopper design are needed for feeder design. Serious errors can be made by assuming bulk solid flow properties and design factors. Table 12.63 shows the minimum bulk and construction material and test results that are needed before attempting to design the feeder.

Test	Design Factor	Relevance
ASTM D6128-00 (or latest)	**Internal Angle of Friction**	**Shear Force, arching angle**
	Wall Interface Friction	**Liner friction, wall loads**
	Material & Belt Friction	**Pull out Tension**
CEMA 550 (latest version)	**Bulk Density**	**Vertical load**

Table 12.64
Minimum material tests required for belt feeder design

Maintenance

While belt feeders are economical, they do require regular maintenance to perform at the design criteria. Since the need for regular maintenance to sustain performance is a given, the feeder and surrounding area must be designed for easy access and replacement of wear items. Replacement of wear components like wear liners, skirting seals and regulating strike plates must be given close attention to reduce belt wear and control dust leakage and spillage.

Because feeder belts are short and subject to abrasive wear the belts need to be replaced more often than in the rest of the system. It is advisable to accommodate this need by designing in room and sufficient belt takeup for belt removal and replacement. Belt tracking is usually easy to control on one directional feeders but very difficult to control on reversing feeders because of the significant loads imposed on the belt by the bulk solid, patterns of build up and wear in the hopper. Whenever possible a belt feeder should be one directional and if reversing operation is needed a secondary reversing transfer conveyor should be considered. Sometimes special belt constructions such as chevron belts are used to improve withdrawal

UNCONTROLLED COPY (No issued this document (1416/4) of Mr. [illegible] Pattarapon Thirawat, Siam Cement Co., Thailand)

from the hopper or raised edge belts to contain spillage are used. These belts have their advantages for their intended benefit but they do present design trade-offs in terms of belt cleaning and sealing.

Belt Cleaning and Sealing

For control of dust and spillage on feeder belts and to reduce belt tracking problems attention to belt cleaning and sealing is critical. At least two belt cleaners with adequate access for service should be accommodated in feeder designs. Vertical and horizontal forces at the belt interface can be significant making belt sealing challenging. When space and bulk material properties permit using a wider belt and allowing the material to flow under the hopper without seals is an option.

Flow Aid Devices

Flow aid devices can often be incorporated into the design of feeders to reduce operation problems. Vibrators can reduce bridging and build up in the hopper section. Air cannons can be used for breaking up materials that tend to interlock or form lumps. Air cannons can also be used to reduce build up in transition areas and hopper corners. Air cannons expel high pressure air which can project particles so appropriate interlocks are required on inspection doors and position to contain the projectiles within the chute Liner materials can reduce wall friction to reduce the tendency for bridging. Liners of metal, plastic and ceramic are commonly used as sacrificial wear surfaces but care must be taken to install them so there are no jagged edges or ledges created which will retard flow in the feed chute. Flow aids should be used as preventative measure and only when bulk material is flowing. Use of a flow aid device when flow is stopped may compact the bulk material and block the feeder from starting. Flow aids can loosen or dislodge large chunks of material which is a form of potential energy which must be neutralized prior to entering a bin or hopper.

Disadvantages of Belt Feeders

While suited for a wide variety of bulk solids, certain bulk materials are difficult to handle on belt feeders. Belt feeders are generally not the first choice when the material is very free flowing with a tendency to aerate and flood. It is difficult to control dust from such very fine materials because it is difficult to maintain a 100% dust tight seal on a feeder belt.

Applications that require guaranteed sealing against positive or negative gas pressures are not suitable for belt feeders. Where there is constant heavy impact, like on run-of-mine material, apron feeders are generally used in place of belt feeders. Many processes create condensation problems or vapors that tend to build up inside the belt feeder chute and cause many operational problems. Dust and spillage can generally be controlled to acceptable levels but belt feeders should not be used where dust or spillage of the material conveyed would be considered a hazardous material.

BELT FEEDER DESIGN

Belt feeders can be designed as gravimetric feeders by adding load cells and belt speed control but are most commonly designed as volumetric feeders. The maximum flow rate of material from the bin discharge opening must always be greater than the capacity of the belt feeder. The proper hopper outlet width or diameter to guarantee flow must be determined first and may determine the minimum belt width. The design principles are well established for hopper design based up on the friction properties of the bulk solid and the geometry of the bin. Normally a slot shaped outlet design is preferred for belt feeders although other opening shapes can be accommodated.

www.CEMENET.NET/ downloaded this document (4604) on Apr 21, 2017 (Thanaporn Sritrakool, SINHATHAI) - Thailand

Capacity

The required capacity is usually a design requirement. The design of a feeder is an iterative process due to the large number of variables and the rules that govern successful belt feeder design. The regulating gate is typically used to adjust the flow during commissioning. Production flow rates should be controlled by allowing adjustment of the belt speed so that the regulating gate opening can remain constant and compatible with the remainder of the feeder design.

Belt Width, Trough Angle and Loading Direction

For dedicated feeder belts flat or picking idler profiles are preferred. The picking idler profile is sometimes selected for short belts to reduce spillage. For longer belts that incorporate a feeder as the loading method 20 or 35 degree trough angles with equal roll length idlers are commonly used. Feeding on the transition of a troughed belt can be accomplished but complicates the fabrication and sealing of the feeder and may accelerate belt wear.

CEMA Recommendation

- The minimum belt width should be 2 times the slot opening at the rear of the hopper or 2 times the diameter of the outlet of the feed hopper.
- Base the design on the assumption that there will be skirtboards the entire length of the feeder.
- Select the belt width and trough angle for feeders based on the standard edge distance and surcharge angle of the material within the recommended belt speed range.
- Loading should be in line with the direction of the feeder travel.

Feeder Outlet Dimensions

Generally speaking if the belt width is based on the surcharge angle and minimum edge distance using a feeder outlet width of 2/3 the belt width will work. The height of the feeder outlet should be adjustable ± 25% to allow for balancing the system. A regulating slide gate can be used for this purpose. The maximum feeder outlet height for flat belts can be calculated by determining the cross sectional area of the load based on the capacity equations in Chapter 4, divide by 2/3 the belt width to find the height and then add 25%. For troughed belts some additional calculations may be necessary to accurately determine the maximum feeder outlet height.

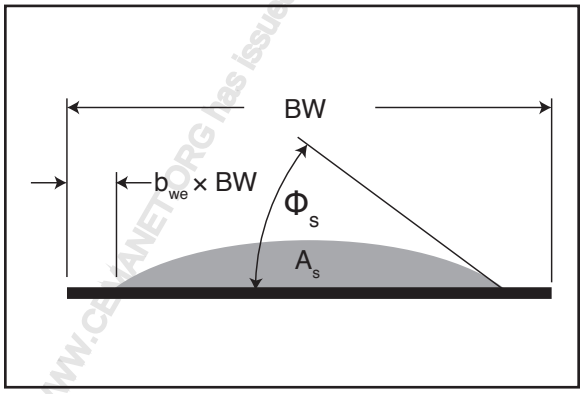

Figure 12.65
Flat belt CEMA standard cross sectional area

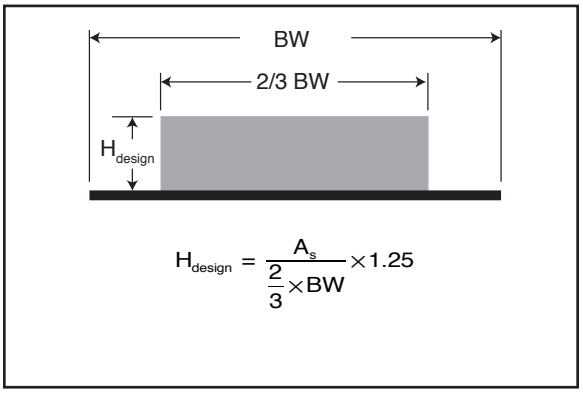

Figure 12.66
Flat belt feeder outlet dimensions

www.CEMANET.ORG has issued this ebook to Mahidol University on April 25, 2014 for Pitiarapom Sitdhiphol (Phuluang, Thailand)

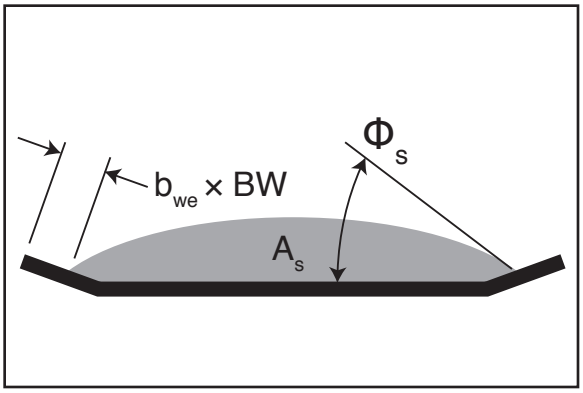

Figure 12.67
Troughed belt CEMA Standard cross sectional area

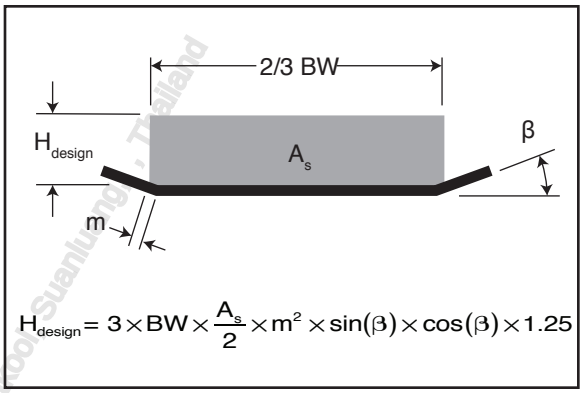

Figure 12.68
Toughed belt outlet dimensions

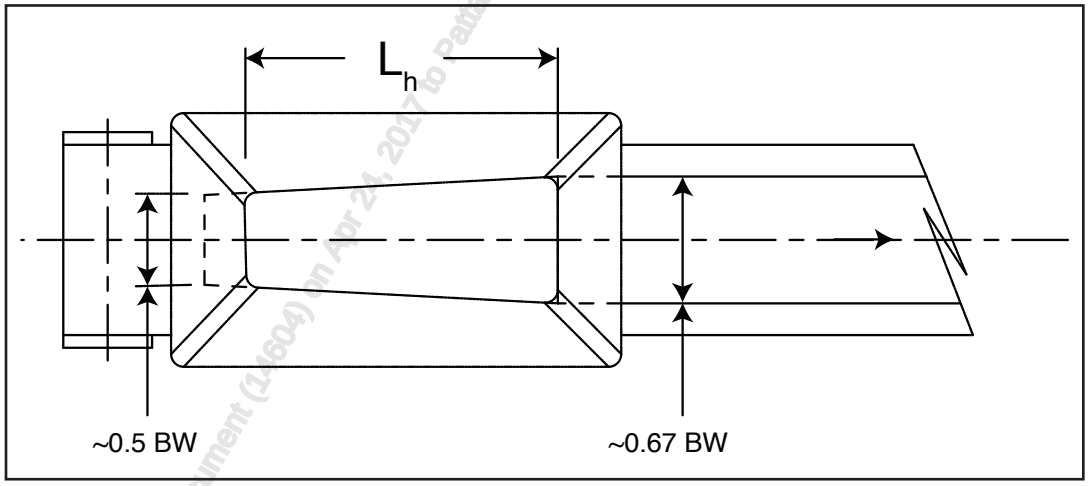

Figure 12.69
Feeder tapered feed skirt design.

WWW.CEMANET.ORG has issued this document (14604) on Apr 24, 2017 to Patrapom Sritrakool, Suanluang, , Thailand

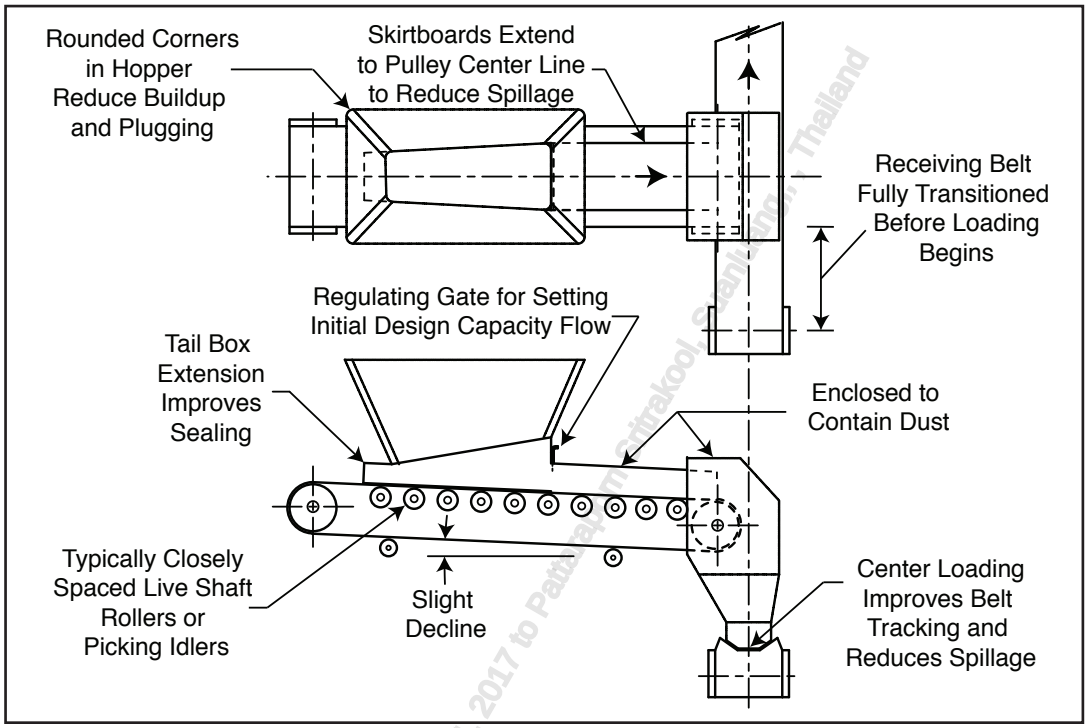

Figure 12.70
Typical dedicated hopper feeder design

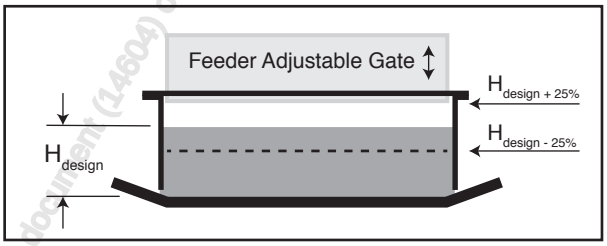

Figure 12.71
Adjustable feeder discharge gate

www.pbtechnology.com issued this document (14604) on Apr 24, 2017 to Pattarapon Pattrakool, Chulalongkorn University, Thailand

Feeder Loads

The CEMA method provided below is based on a conservative approach to estimating the load at the shear plane of the feeder. The results of the CEMA method should result in a reasonable but conservative result in most circumstances. The major assumptions are:

- The effects of impact are negligible.
- The force to accelerate the bulk solid is negligible.
- The material is an incompressible bulk solid.
- There is minimal clearance between the belt and the hopper and a rigid feeder.
- The friction of the hopper end wall opposite the exit has a negligible effect.

There are several tension calculations required for calculation of the total belt tension for a feeder. They can be classified into the following groups:

- Vertical load on the feeder belt
- Force to shear the bulk material

- Skirtboard friction resistance
- Force to elevate the bulk material
- Force to move the belt, idlers, pulleys and accessories resistance's

The force to elevate the material and move the belt over the standard components is given in Chapter 6. The vertical load, force to shear the material and skirt friction resistance in the hopper will be treated as special cases for feeder belt tension calculations.

Vertical Load and Material Shearing Resistance

The vertical load on the area above the feeder can vary from the initial loads generated from filling to when there has been no flow for a period of time resulting in consolidation and strengthening of the bulk material. The loads on the bulk material must be known to estimate the force to shear the material with the flow limiting device at the exit of the feeder. It is important to remember that for the total load on the belt within the hopper section, the weight of the material below the shear plane and between the skirtboards must be included.

When a hopper is first filled the load on the belt is almost entirely vertical. Once the material has flowed from the hopper stress fields are established that often reduce the load. It is common for the initial belt pull out tension to be several times as large the running tension once flow is established. Therefore, keeping material in the hopper and running at a steady rate usually reduces feeder power requirements. There are other advantages to keeping material in the hopper such as reducing impact on the belt feeder and structure. Since it is inevitable that the hopper will be empty numerous times during the life of the equipment it is recommended that feeder power requirements be based on the initial hydrostatic load or peak load, Q_i. Q_i should be calculated assuming the feeder has a full hopper using the equation 12.76.

To estimate Q_i it is necessary to determine the volume of material creating the pressure on the shear plane. For material that has consolidated, the arching angle, ϕ_i, at the base of the hopper at the shear plane and the materials effective coefficient of internal friction, tan (ϕ_i). For very free flowing bulk solids the angle of repose can be used as an estimate of the arching angle as equal to the angle of internal friction. The friction coefficient based on the internal angle of friction of the material and the hopper geometry is called, μ. Since most belt feeders are horizontal or slightly declining μ can be conservatively assumed to be: $\mu = \tan(\phi_i)$, the coefficient of internal friction.

For materials that have not had time to consolidate the volume of material is often considered to be the vertical column on the shear plane or $\phi_i = 90$ degrees. Assuming a vertical column of material produces a conservative result and is often used to estimate the pull out tension required for a plugged chute situation

$$F_Q = \tan(\phi_i) \times Q_i$$

Equation 12.72

F_Q, Force to shear the bulk material as it exits feeder hopper

Where:

ϕ_i = Angle of internal friction of the bulk solid on the shear plane (degrees)

Q_i = Peak load on feeder belt created by the pressure volume of bulk material in the hopper

To estimate the load it is necessary to determine the mass of material that is effectively loading the shear plane (pressure volume). This is done by estimating the volume above the shear plane that would

WWW.CEMANET.ORG/gb Issued to: CEMAT (21604) on 04-07-2010 (attaraporn Sirirat), Chanluang, Thailand

be contained under the arch stress field that forms in the material under flow conditions. The arching angle, ϕ, can be determined through shear cell testing and hopper geometry. Conservative values for ϕ_i for free flowing bulk solids are 70 to 80 degrees. The shearing force for simple feeder designs handling free flowing bulk solids can be estimated by calculating the volume of surcharge material above the shear plane, calculating the weight and applying the coefficient of internal friction of the material. For complex hopper or feeder designs consult a CEMA Member company for advice.

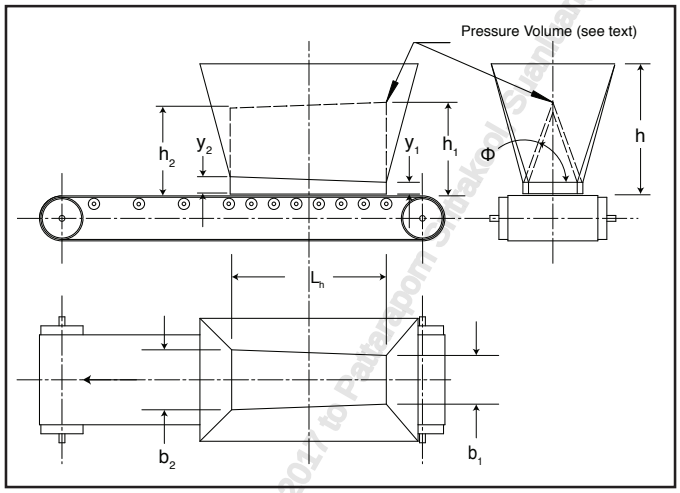

Figure 12.73
Simple belt feeder

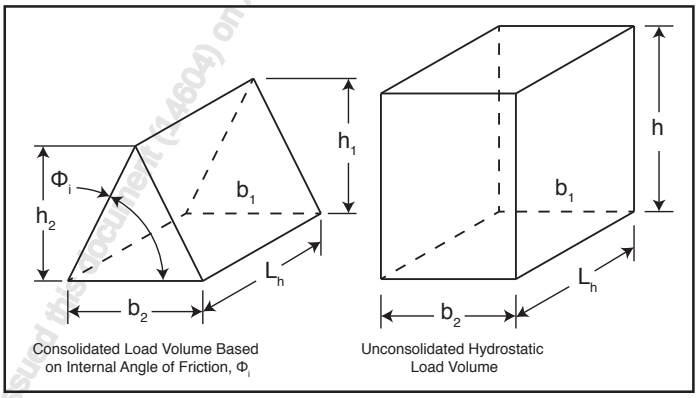

Figure 12.74
Simple belt feeder pressure volumes

For consolidated materials the volume of the bulk material is:

$$V_{fs} = \frac{1}{2} \times \left(\frac{b_1+b_2}{2}\right) \times \left(\frac{h_1+h_2}{2}\right) \times L_h$$

Equation 12.75
V_{fs}, Consolidated pressure volume

$$Q_i = V_{fs} \times \gamma_m$$

Equation 12.76
Q_i, Load on feeder belt

WWW.CEMANET.ORG has issued this document (1446044) on Apr 24, 2017 to Patterson Conveyors Standard, , Trial.

The weight of the surcharge material, Q_i, is the volume times the bulk density. Consider the bulk density under the consolidating load of the material in the hopper and not the loose bulk density. Consider the possibility that the feed hopper has been overpressured and could be considered a plugged chute. In this case substitute h, the height of material in the hopper, for h_1 and h_2. The resistance to shearing the material for a simple feeder is then estimated as a tension:

$$\Delta T_{Q_i} = \mu \times Q_i \quad \text{[lbf (kgf)]}$$

Equation 12.77
T_{Q_i}, Belt tension required to shear bulk material in feeder hopper

Skirtboard Resistance

The skirtboard resistance consists of two components. The portion inside the hopper section and then any skirted length beyond the hopper section. In both cases the pressures on the skirts are assumed to be normal to the skirt surface, behaving like hydrostatic loads. Only the resistance in the hopper section is given in this section since the skirt seal resistance, and depending upon the length and other characteristics of the feeder which add resistance to belt movement, are considered in chapter 6. A reasonable approximation is made using the average lengths and areas of the shear plane and the skirtboard walls.

$$P_v = P_n \times K_a$$

Equation 12.78
P_v, Hydrostatic pressure on skirtboards

Where:

$$P_n = \left[\frac{Q_i}{L_h \times \left(\frac{b_1 + b_2}{2} \right)} \right]$$

$$K_a = \left(\frac{1 - \sin(\phi_i)}{1 + \sin(\phi_i)} \right) \quad \text{(dimensionless)}$$

ϕ_i = Bulk solid angle of internal friction

The skirtboard resistance inside the hopper is the hydrostatic pressure, P_v, times the skirtboard area times the friction factor between the bulk material and the skirtboard. The skirtboard resistance is then estimated as a tension. **Note:** The factor 2 is for the 2 sides of the hopper. The end wall is not considered.

$$\Delta T_s = 2 \times P_v \times L_h \times \left(\frac{y_1 + y_2}{2} \right) \times \mu_s$$

Equation 12.79
T_s, Tension added to belt from skirtboard resistance in the feeder hopper

Where:

μ_s = Interface friction coefficient between bulk solid and skirtboard (dimensionless)

WWW.CEMANET.COM issued this document (14604) on Apr 24, 2017 to Pearl Nori Entrakool, Guanabara, , THAILAND

Limiting Conditions

The product of the coefficient of friction between the belt times the weight of the material between the skirt plates plus the bulk material load in the must be greater than force to shear the material at the hopper outlet plus the skirtboard resistance or the belt will not be able to withdraw material. While this seems obvious it is often overlooked. The coefficient of friction between the belt and the bulk material can be measured with the same test procedures used to determine the internal friction and wall friction angles or it can be estimated by the belt manufacture for the application. Using the factor K_a as a modifier of the hydrostatic pressure is a good approximation for free flowing granular material. As the material flowability decreases and particle size increases, the calculation becomes more conservative.

Feeder Power Requirements

From chapter 6 the power required at the drive of a belt conveyor is the effective tension, T_e, required at the drive pulley to propel or restrain the loaded conveyor at the design belt velocity. The feeder drive should be selected based on the design capacity and therefore the maximum speed of the feeder.

T_e is the sum of several individual components of belt tension. See Equation 6.9. For belt feeders it is important to include the resistance from the force to shear the material, ΔT_{Qi}, the skirtboard resistance, ΔT_s, the force to elevate the material and the main resistances of conveyor, In addition to these items there may be other accessory items, skirtboard seals, plows, belt cleaners and other accessories, all of which should be included because on short belts they can have a significant effect.

$$T_{e\text{-}feeder} = (\Delta T_s + \Delta T_{Qi}) \times R_{rf} + \sum \Delta T_{Energy\ n} + \sum \Delta T_{Main\ n} + \sum \Delta T_{Point\ n}$$

Equation 12.80

$\Delta T_{e\text{-}feeder}$, Total tension for a belt feeder

Obviously, the consistent operation of the feeder with out plugging and jamming is key to delivering the proper amount of bulk material at the design capacity to the process. Feeder design is subject to a variety of design assumptions. The more experienced the conveyor designers can use a Modifying Factor of R_{rf} =1.0 while, less experienced designers may want to use up to R_{rf} =1.5 to produce a very conservative design.

WWW.CEMANET.ORG has issued this document (14004) on Apr 25, 2011 to Pattarajan Muttirakool, Subject to Terms of Use

Flat belt skirted full length (Ref. Figure 12.70)

Gravel, bank run Q = 1,000 tph, $\gamma_m = 100\frac{lbf}{ft^3}$, $\phi_i = 70$ deg,

BW = 48 in, Hopper L_h = 6 ft, μ_s = 1.2 y_1 = 1.0 ft $y_2 = H_{design}$, μ_s = 1.5

Assume initial estimate for H_{design} = 1.25 ft, calculate required belt speed V to see if reasonable

$$V = \frac{Q}{\gamma_m \times A} = \frac{Q}{\gamma_m \times \left(\frac{2}{3} \times BW \times H_{design}\right)} = \frac{1{,}000\frac{t}{h} \times 2{,}000\frac{lbf}{t} \times \frac{1\ h}{60\ min}}{100\frac{lbf}{ft^3} \times \left(\frac{2}{3} \times \frac{48\ in}{12\frac{in}{ft}} \times 1.25\ ft\right)} = \frac{33{,}333.33\frac{lbf}{min}}{333.33\frac{lbf}{ft}} = 100\ fpm$$

Calculate vertical load on the belt based on angle of internal friction, ϕ_i

b_1 = 0.5 x BW = 2 ft, $h_1 = \tan(\phi_i) \times \frac{1}{2} \times b_1 = 2.7474 \times 1.0\ ft = 2.75\ ft$

$b_2 = \frac{2}{3} \times BW = 2.67\ ft$, $h_2 = \tan(\phi_i) \times \frac{1}{2} \times b_2 = 2.7474 \times 1.33\ ft = 3.65\ ft$

$$V_{fs} = \frac{1}{2} \times \left(\frac{b_1+b_2}{2}\right) \times \left(\frac{h_1+h_2}{2}\right) \times L_h = \frac{1}{2} \times (2.34\ ft) \times (3.20\ ft) \times 6\ ft = 22.5\ ft^3$$

$$Q_i = \gamma_m \times V_{fs} = 100\frac{lbf}{ft^3} \times 22.5 ft^3 = 2{,}250\ lbf$$

Calculate the resistance to shearing the bulk mateiral at the hopper exit based on $\mu_s = \tan(\phi_i)$

$\Delta T_{Qi} = Q_i \times \mu = 2{,}250\ lbf \times \tan(\phi_i) = 2{,}250\ lbf \times 2.7474 = 6182\ lbf$

Calculate the hydrostatic pressure against the hopper skirtboards and the resistance

$$P_v = P_n \times K_a = \left[\frac{Q_i}{L_h \times \left(\frac{b_1+b_2}{2}\right)}\right] \times \left(\frac{1-\sin(\phi_i)}{1+\sin(\phi_i)}\right) = \left[\frac{2250\ lbf}{6\ ft \times \frac{(2.0\ ft+2.67\ ft)}{2}}\right] \times \left(\frac{1-0.9397}{1+0.9397}\right) = 9.99\frac{lbf}{ft^2}$$

$$\Delta T_s = 2 \times P_v \times L_h \times \left(\frac{y_1+y_2}{2}\right) \times \mu_s = 2 \times \left[9.99\frac{lbf}{ft^2} \times 6ft \times \left(\frac{1.0\ ft+1.25\ ft}{2}\right) \times 1.5\right] = 202.3\ lbf$$

Calculate the power required to feed the material from the hopper

$$Power = (\Delta T_s + \Delta TQ_i) + \times V = \frac{(6182+202)\ lbf \times 100\frac{ft}{min}}{33{,}000\ \frac{lbf-ft}{min}} = 19.3\ hp\ (14.5\ kW)$$

To estimate the maximum pull out or plugged chute power, consider h_1 and h_2 = hopper overall height, assume h = 6 ft

Then V_{fs} = 42.1 ft^3 and Q_i = 4210 lbf and Power = 36.2 hp (27 kW)

Note :

The ΔT components from the belt, idlers, extended skirtboards, bearings, accessories and to lift the bulk material must be added to ΔT_s for the total power required to operate the feeder. See Chapter 6.

Figure 12.81
Example feeder calculations

WWW.CEMAnet.org is issued the document 1460 on Aug 4, 2017 to Pattarapon Sirakoolwanich , Thailand

TRIPPERS

Trippers are devices used to discharge bulk materials from a belt conveyor at points upstream from the head pulley. Essentially, a tripper consists of a frame supporting two idling pulleys; one above and forward of the other. The conveyor belt passes over and around the upper pulley and around and under the lower pulley. The belt usually inclines to the upper pulley, and may run horizontally, or it may then incline again from the lower pulley.

With this construction, the material handled by the belt is discharged to a chute as the belt wraps around the upper pulley. The chute can be arranged to catch and divert the discharged material in any desired direction. The chute arrangement, augmented by movable gates or "bucket diverters", can be such as to discharge the material to either or both sides of the belt conveyor, or even back again onto the conveyor belt beyond the tripper.

Trippers can be stationary (fixed) or movable . Stationary trippers are used where the discharge of material needs to occur at a specific location. More than one stationary tripper can be used on a belt conveyor, either to discharge material from the belt at definite locations, or to direct the material back again to the conveyor belt for discharge over the succeeding fixed tripper or the head pulley. Movable trippers have the tripper frame mounted on flanged wheels, which engage parallel rails supported on either side of the belt, usually from the conveyor frame. Such movable trippers can be moved by a cable and winch, by the belt itself, or by an electric motor mounted on the tripper. These movable trippers are reversible and at times the belt may reverse when the tripper is moving. Unless the accessories are designed for reversing action they may be damaged.

The belt and motor-driven trippers frequently are arranged to move continuously back and forth along chosen portions of the belt conveyor, reversing automatically at the ends of their travel. They are typically used in power plants to load the bunkers or at stockpile locations to deposit material in separate piles. All movable trippers can remain in specific locations for a short time or can be locked in position for longer periods. Often, movable trippers have a platform to transport an operator, or a crosswalk permitting the operator to cross from one side of the conveyor belt to the other. Controls for the movement of the tripper are located for convenient access by the operator.

When handling dusty material, such as dry, fine, bituminous coal, conveyor belt and motor-driven trippers are provided with seals along the length of the conveyor, near the openings to the covered hopper or bunker below where the moving tripper chute discharges. These seals prevent the escape of dust from the covered bins or hoppers into which the chutes discharge. There are several forms of seals, including a moving "carpet" of rubber-covered fabric belt, a pair of overlapping rubber-covered fabric belt strips, and a stationary carpet of rubber-covered fabric belt. With the stationary carpet type of seal, the tripper carries pulleys which pick up the carpet and then pass it around the discharge chute.

To increase the utility of the tripper in forming long piles or windrows of material on one or both sides of the belt conveyor, the material discharged over the upper pulley of the movable tripper can be directed either to a transverse, horizontal, reversible belt conveyor carried by the tripper, or to one of two transverse, inclined belt conveyors also carried by the tripper. A more recent development is the use of "batwings" which are curved chutes that protrude a distance away from the belt and deposit material further away.

All trippers absorb a certain amount of power from the belt conveyor drive, because the conveyor belt flexes over the tripper pulleys. Movable trippers that are actuated by the conveyor belt itself absorb greater amounts of power from the conveyor drive. For power requirements of trippers, refer to Chapter 6.

WWW.BKMET.COM Disclaimer: This document is NOT to be distributed (BKMET) on April 25, 2017 to Nattapon Sritrakool (gurujuang, gmail.com)

Tripper Discharge Through Auxiliary Arrangements

Tripper with Reversible Cross Belt

With this arrangement, a movable tripper carries a horizontal reversible cross belt. By means of a gate in the bifurcated tripper chute and a corresponding travel direction of the cross belt, material discharged from a belt conveyor by the tripper can be placed in long piles or windrows on either side of the tripper. Or, if desired, individual piles of various materials or grades of the same material can be stockpiled on either side of the tripper.

Tripper with Two Transverse Stacker Belts

To form higher piles than is possible with a horizontal cross belt, the tripper can be outfitted with two inclined stacker belt conveyors. With this arrangement, continuous high piles can be built on either side of the tripper, or spot stockpiles can be built as desired or required.

Tripper with Reversible Shuttle Belt

This arrangement is similar to the tripper with the plain cross belt. However, here the cross belt is a shuttle or movable belt conveyor and is reversible in direction. With this arrangement, flat-topped piles with a large top area can be built as continuous windrows on either side of the tripper, or as spotted stockpiles.

Tripper with Batwing Chutes

This is a more recent arrangement that does not add any new belts, but instead uses a new carefully designed "batwing" chute to discharge the material into piles further away from the belt when lowered.



Figure 12.82
Typical tripper with "Batwing" chutes



Figure 12.83
Tripper with stacker belt

DISCHARGE PLOWS

Discharge of fine materials from flat, horizontal belt conveyors can be accomplished by plows, either stationary or movable with cable and winch. It is also possible to plow material from flat, inclined belt conveyors, if the angle of incline is not too great and the material is not too free flowing.

www.CEMENTNET.OK... Thailand



Figure 12.84
Discharge Plow

www.CEMA.ORG has issued this document (1442) on May 14, 2014, to Customer from Sritrakarn Thailand

Essentially, discharge plows are metal fabrications set at an angle typically not exceeding 45° to the belt center line, fitted at the bottom edge with an adjustable, resilient non-metal edging. There are a number of common arrangements of discharge plow blade designs to accomplish discharge to one side, to both sides simultaneously, or to both sides simultaneously but with a portion of the material left on the central part of the belt. The frame work of the discharge plow must clear the belt and load when not in use. Discharge plows are usually raised and lowered using air or hydraulic cylinders.

The portion of the belt under the plow customarily is supported on a flat metal slide plate. This keeps the belt flat so that the plow can affect a reasonably clean discharge. Plows seldom remove 100 percent of the material from a belt, so a small amount of material is likely to pass under the plow and over the end pulley of the conveyor. A means to collect or direct this material must be provided. Since the plow covers 100% of the belt width full width, belt cleaning and often belt edge cleaning is required.

Plows Discharging to One Side

Plows used to discharge to one side of a flat belt conveyor can swing horizontally across the belt on a vertical pivot or lift vertically on a horizontal pivot.

Single Horizontal Swing Plow

By a horizontal movement of the plow, all or part of the material can be removed from the belt. Plows removing all of the material from the belt can be manually operated or powered by a pneumatic or hydraulic cylinder.

Single Lift Plow

This type of plow is lowered to discharge material from the belt or raised to avoid discharge. Again, all or part of the material can be removed from the conveyor belt, and the plow can be manually or power operated. Plows which discharge simultaneously to both sides of a flat belt conveyor, are called "V" plows. Two blades moving vertically on vertical guides can form the 'V," or a fixed "V" can be raised or lowered rotationally on a horizontal pivot.

Horizontal V-Plow

The blades swing on vertical pivots and join at the center. This arrangement makes possible several combinations of discharge: part of the material to one side, part to the other side, or all of the material from the belt. The blades can be manually or power operated.

Vertical V-Plow

A fixed V can be angularly raised or lowered to remove all material. Manual or power operation can be used.

A variation of this plow is the open V, which allows some of the material to remain on the central portion of the belt, while discharging the outer portions of the material stream at both sides of the belt. Sometimes the amount of opening at the apex of the V is adjustable. Such a plow is called a proportioning V-plow.

Traveling V-Plow

Moved by cable and winch in either direction, this V-plow discharges to both sides of a flat belt conveyor in any number of specific positions. This plow has been adapted to troughed belts by use of a flat belt support plate that lifts the belt from the troughing idlers. Such an arrangement conserves headroom.

DISCHARGE TRAJECTORIES

The path of the material discharged over the end pulley of a belt conveyor is known as its trajectory. The curvature of this path is determined by the rotational speed and radius of the end pulley, and by the force of gravity.

The proper design of transfer chutes, including the location of chute covers and wearing plates, depends upon the shape of the trajectory. Thus, the trajectory of the discharged material must be predicted as accurately as possible.

A number of authors and most catalogs prepared by belt and conveyor manufacturers have offered methods of calculating and plotting the material trajectory. There are several methods available for including the effects of particle size and air resistance on the tendency for the discharge trajectory to open up as it falls significant distances. The CEMA method does not incorporate these refinements, but the trajectories calculated by the CEMA method are in close agreement with photographs and observations of actual trajectories of material discharged from belt conveyor to belt conveyor and is suitable for most applications.

Allowance has been made for the change in the load shape of bulk material carried on a troughed belt conveyor when the belt flattens as it approaches the discharge pulley. The material tends to increasingly slump laterally toward the belt edges as the belt flattens at the pulley. Here, the load cross-section shape becomes, for all practical purposes, a segment of a circle. The cross-sectional area of this segment is equal to the average cross-sectional area of the load on the troughed portion of the conveyor.

The forces acting on the material as it reaches the pulley must be taken at the center of mass. Practically, this is the center of gravity of the cross-section of the load shape. A method has been developed to determine the height of this center of gravity above the belt surface, for various capacity loads, on any width of belt for 20 , 35, and 45 degree three-equal-roll troughing idlers. The effective radius about the center of the discharge pulley can be easily determined. The median line of the trajectory is established, thus permitting a close approximation to the upper and lower limits of the path of the discharged material stream.

www.CEMAT.org has licensed this document (1264) on April 4, 2017 to Chaiyaphon Siripool, Suanlum Rayong, Thailand

If the material has an apparent density of 50 lbf/ft^3 (800 kgf/m^3) or more and is of roughly uniform particle size, the upper and lower limits of the material path will be relatively parallel to the median line for free falls of the discharged material to 7 feet (2.1 m) below the center of the discharge pulley. If the free fall is greater than 7 feet and up to 20 feet (2.1 to 6.1 m) below the center of the discharge pulley, the upper and lower limits of the material path may diverge a little.

Light, fluffy materials, very high belt speeds, and a mixture of large lumps and fines will alter the upper and lower limits of the material path. Lumps riding near the top of the material at the discharge pulley will be thrown farther from the discharge pulley. The trajectory of any such lumps can be closely approximated by calculating and plotting their individual trajectories. Air resistance will cause light, fluffy materials to spread vertically and laterally as they are being discharged over the pulley. Allowance should be made accordingly when determining the upper, lower, and lateral limits of such material trajectories.

Calculating and Plotting Normal Material Trajectories

The method of calculating and plotting the trajectories of normal materials involves careful attention to the following five considerations:

Center of Mass

The point in the mass of the material at which all forces act is the center of gravity of the load-shape cross section, at the point where the moving conveyor belt becomes tangent to the pulley.

Velocities

The material load and the belt are moving at the same linear velocity, up to the point where the belt becomes tangent to the pulley. The tangential velocity acquired by the material taken at its cross-sectional center of gravity, as the material meets the curvature of the belt on the pulley, is proportional to the radial distance between the cross-sectional center of gravity of the material and the center of the pulley, for any given speed of discharge-pulley rotation.

Start of Trajectory

The start of the trajectory is determined by that point on the circumference of the circle about the pulley center, formed by the cross-sectional center of gravity, where the centrifugal force at that point equals the radial component of the gravity force at that point.

Load Shape

Immediately prior to the point of tangency of the belt and pulley, the material load shape of a troughed belt conveyor can be closely approximated by a segment of a circle, as shown in Figures 12.85 and 12.86. The area of the circular segment in Figures 12.83 and 12.84 is equal to the cross-sectional area of the material load on the normal troughed portion of the conveyor belt. The height of this point, a_1, and the height of h are given in Tables 12.88 through 12.91.

www.CEMA-DC.org has [illegible] document [illegible] on Apr 25 2017 to Pattaraporn Smitkeaw [illegible] Co., Ltd., , Thailand

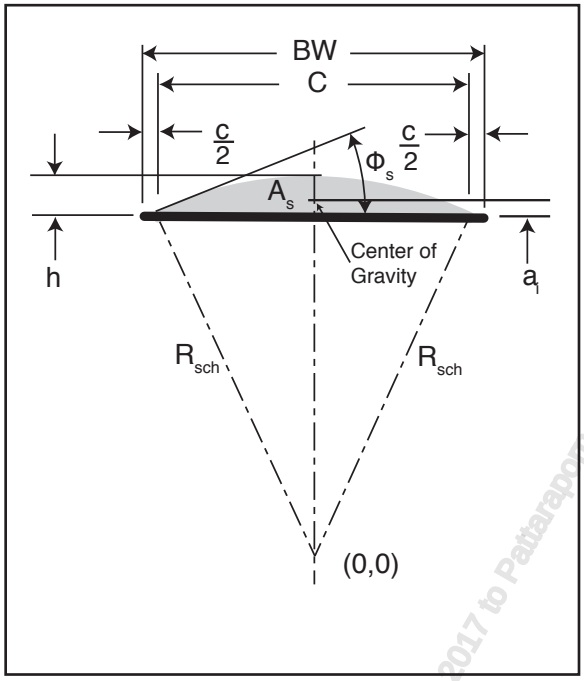

Figure 12.85
Discharge profile transitioned from troughed belt to flat with 1/2 standard edge distance

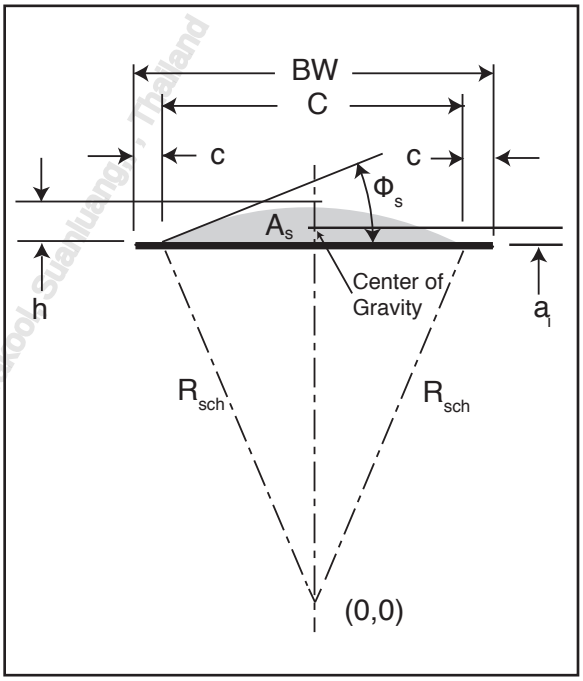

Figure 12.86
Discharge profile for flat belt, no transition and with standard edge distance

Tables 12.88 through 12.91 are calculated based on the following approximation for the Area and geometry of the discharge profile. Using tables 4.41 through 4.48 for A_s, the approximate area relationship results in less than 1% error.

$$a_1 = - R_{sch} + \frac{C^3}{A_{sc}} + h$$

Equation 12.87
a_1 , Approximate center of gravity of discharge profile

Where:

Solve for h in: $A_s \approx \frac{2 \times C \times h}{3} + \frac{h^3}{2 \times C}$

$R_{sch} = \frac{C^2 + 4 \times h^2}{8 \times h}$

Note: Distance from center of arc (0,0) to center of gravity $= \frac{C^3}{A_s}$

WWW.CEMANET.ORG has issued this document (144604) on Apr 24, 2017 to Pattaraporn Sritrakool Suanluang, Thailand

	Three equal length roll troughing 20° Idlers h and a_1 values in inches (mm) based on cross section loads from Tables 4.41 through 4.48 and troughed belt profile 12.85 (1/2 standard edge distance)									
	Surcharge Angle			0°	5°	10°	15°	20°	25°	30°
Belt Width	18	500	a_1	0.50 (12.7)	0.6 (15.2)	0.69 (17.60	0.80 (20.4)	0.91 (23.2)	1.01 (25.7)	1.12 (28.5)
			h	1.20 (30.4)	1.45 (36.8)	1.70 (43.2)	1.96 (49.8)	2.22 (56.4)	2.48 (63.0)	2.74 (69.6)
	24	600	a_1	0.71 (18.0)	0.85 (21.6)	0.98 (24.9)	1.13 (28.8)	1.28 (32.6)	1.43 (36.4)	1.58 (40.2)
			h	1.72 (43.7)	2.07 (52.6)	2.42 (61.5)	2.77 (70.4)	3.14 (79.8)	3.49 (88.7)	3.87 (98.3)
	30	800	a_1	0.92 (23.4)	1.09 (27.7)	1.28 (32.6)	1.46 (37.1)	1.65 (42.0)	1.84 (46.8)	2.04 (51.9)
			h	2.23 (56.6)	2.68 (68.1)	3.13 (79.6)	3.59 (91.2)	4.05 (102.9)	4.51 (114.6)	4.99 (126.8)
	36	1000	a_1	1.12 (28.4)	1.34 (34.0)	1.57 (39.9)	1.8 (45.8)	2.02 (51.4)	2.26 (57.5)	2.50 (63.5)
			h	2.75 (69.9)	3.3 (83.8)	3.85 (97.8)	4.41 (112.1)	4.96 (126.0)	5.53 (140.5)	6.11 (155.2)
	42		a_1	1.35 (34.3)	1.57 (39.9)	1.87 (47.5)	2.15 (54.7)	2.42 (61.5)	2.68 (68.1)	2.96 (75.2)
			h	3.26 (82.8)	3.91 (99.3)	4.57 (116.1)	5.23 (132.9)	5.89 (149.7)	6.55 (166.4)	7.23 (183.7)
	48	1200	a_1	1.55 (39.4)	1.84 (46.7)	2.15 (54.7)	2.46 (62.5)	2.77 (70.4)	3.09 (78.5)	3.41 (86.7)
			h	3.78 (96.0)	4.53 (115.1)	5.28 (134.2)	6.04 (153.5)	6.8 (172.8)	7.57 (192.3)	8.35 (212.1)
	54	1400	a_1	1.73 (43.9)	2.08 (52.8)	2.43 (61.8)	2.79 (70.9)	3.16 (80.3)	3.5 (88.9)	3.88 (98.6)
			h	4.29 (109.0)	5.15 (130.8)	6.00 (152.4)	6.85 (174)	7.72 (196.1)	8.59 (218.2)	9.48 (240.8)
	60	1600	a_1	1.97 (50.0)	2.34 (59.4)	2.75 (69.9)	3.14 (79.8)	3.52 (89.5)	3.92 (99.6)	4.34 (110.3)
			h	4.81 (122.2)	5.76 (146.3)	6.72 (170.7)	7.67 (194.9)	8.63 (219.3)	9.61 (244.1)	10.6 (269.3)
	72	1800	a_1	2.39 (60.7)	2.86 (72.6)	3.33 (84.6)	3.79 (96.3)	4.28 (108.8)	4.76 (121.0)	5.25 (133.4)
			h	5.85 (148.6)	7.00 (177.8)	8.15 (207.1)	9.3 (236.3)	10.47 (266.0)	11.65 (296.0)	12.85 (326.4)
	84	2000	a_1	2.80 (71.1)	3.35 (85.1)	3.91 (99.4)	4.46 (113.3)	5.02 (127.6)	5.58 (141.8)	6.17 (156.8)
			h	6.88 (174.8)	8.23 (209.0)	9.58 (243.4)	10.94 (277.9)	12.3 (312.5)	13.68 (347.5)	15.09 (383.3)
	96	2400	a_1	3.22 (81.8)	3.85 (97.8)	4.49 (114.1)	5.12 (130.1)	5.77 (146.6)	6.42 (163.1)	7.09 (180.1)
			h	7.91 (200.9)	9.46 (240.3)	11.01 (279.7)	12.57 (319.3)	14.14 (359.2)	15.72 (399.3)	17.34 (440.5)
	108	2800	a_1	3.64 (92.5)	4.34 (110.2)	5.07 (128.8)	5.79 (147.1)	6.51 (165.4)	7.25 (184.2)	8.00 (203.2)
			h	8.94 (227.1)	10.7 (271.8)	12.45 (316.3)	14.20 (360.7)	15.97 (405.7)	17.76 (451.2)	19.58 (497.4)
	120	3000	a_1	4.04 (102.6)	4.85 (123.2)	5.66 (143.8)	6.46 (164.1)	7.26 (184.5)	8.08 (205.3)	8.92 (226.6)
			h	9.98 (253.5)	11.93 (303.0)	13.88 (352.6)	15.83 (402.1)	17.8 (452.2)	19.8 (503.0)	21.83 (554.5)

Table 12.88
a_1 and h_1, at discharge pulley for 20° troughing carrying idlers

WWW.CEMANET.ORG has issued this document for the use of CEMA members only. Any reproduction or distribution is prohibited.

	Three equal length roll troughing 35° Idlers h and a_1 values in inches (mm) based on cross section loads from Tables 4.41 through 4.48 and troughed belt profile 12.85 (1/2 standard edge distance)									
	Surcharge Angle			0°	5°	10°	15°	20°	25°	30°
Belt Width	18	500	a_1	0.78 (19.9)	0.89 (22.7)	0.98 (24.9	1.06 (27	1.02 (26	1.22 (31	1.34 (34.1)
			h	1.91 (48.6)	2.13 (54.2)	2.35 (59.7)	2.57 (65.3	2.78 (70.7	3.01 (76.5)	3.24 (82.3)
	24	600	a_1	1.11 (28.2)	1.26 (32.1)	1.34 (34.1)	1.50 (38.1)	1.59 (40.4)	1.74 (44.2)	1.88 (47.8)
			h	2.73 (69.4)	3.03 (77.0)	3.32 (84.4)	3.63 (92.3)	3.93 (99.9)	4.24 (107.7)	4.56 (115.9)
	30	800	a_1	1.47 (37.4)	1.62 (41.2)	1.77 (45.0)	1.93 (49.1)	2.09 (53.1)	2.24 (56.9)	2.41 (61.3)
			h	3.54 (90.0)	3.93 (99.9)	4.31 (109.5)	4.70 (119.4	5.09 (129.3)	5.48 (139.2)	5.88 (149.4)
	36	1000	a_1	1.75 (44.5)	1.95 (49.6)	2.16 (54.9)	2.35 (59.7)	2.55 (64.8)	2.75 (69.9)	2.95 (75.0)
			h	4.35 (110.5)	4.82 (122.5)	5.29 (134.4)	5.76 (146.4)	6.23 (158.3)	6.71 (170.5)	7.20 (182.9)
	42		a_1	2.12 (53.9)	2.32 (59.0)	2.57 (65.3)	2.78 (70.7)	3.03 (77.0)	3.26 (82.9)	3.48 (88.4)
			h	4.35 (110.5)	5.72 (145.3)	6.28 (159.6)	6.82 (173.3)	7.38 (187.5)	7.95 (202)	8.52 (216.5)
	48	1200	a_1	2.46 (62.5)	2.69 (68.4)	2.96 (75.2)	3.21 (81.6)	3.48 (88.4)	3.76 (95.6)	4.03 (102.4)
			h	5.99 (152.2)	6.62 (168.2)	7.25 (184.2)	7.89 (200.5)	8.53 (216.7)	9.18 (233.2)	9.84 (250.0)
	54	1400	a_1	2.78 (70.7)	3.06 (77.8)	3.36 (85.4)	3.66 (93.0)	3.95 (100.4)	4.26 (108.3)	4.57 (116.1)
			h	6.8 0 (172.8)	7.52 (191.1)	8.24 (209.3)	8.96 (227.6)	9.68 (245.9)	10.41 (264.5)	11.16 (283.5)
	60	1600	a_1	3.09 (78.5)	3.42 (86.9)	3.76 (95.6)	4.09 (103.9)	4.42 (112.3)	4.77 (121.2)	5.11 (129.8)
			h	7.61 (193.3)	8.42 (213.9)	9.22 (234.2)	10.02 (254.6)	10.83 (275.1)	11.65 (296.0)	12.48 (317.0)
	72	1800	a_1	3.77 (95.8)	4.17 (106.0)	4.57 (116.1)	4.96 (126.0)	5.37 (136.4)	5.78 (146.9)	6.19 (157.3)
			h	9.24 (234.7)	10.21 (259.4)	11.18 (284.0)	12.15 (308.7)	13.13 (333.6)	14.12 (358.7)	15.12 (384.1)
	84	2000	a_1	4.43 (112.6)	4.89 (124.3)	5.37 (136.4)	5.83 (148.1)	6.30 (160.1)	6.79 (172.5)	7.28 (185.0)
			h	10.87 (276.1)	12.01 (305.1)	13.14 (333.8)	14.28 (362.8)	15.42 (391.7)	16.58 (421.2)	17.76 (451.2)
	96	2400	a_1	5.09 (129.3)	5.63 (143.1)	6.16 (156.5)	6.71 (170.5)	7.25 (184.2)	7.80 (198.2)	8.36 (212.4)
			h	12.5 (317.5)	13.81 (350.8)	15.11 (383.8)	16.41 (416.9)	17.72 (450.1)	19.05 (483.9)	20.40 (518.2)
	108	2800	a_1	5.76 (146.4)	6.36 (161.6)	6.97 (177.1)	7.57 (192.3)	8.19 (208.1)	8.81 (223.8)	9.44 (239.8)
			h	14.13 (359)	15.6 (396.3)	17.07 (433.6)	18.54 (471.0)	20.02 (508.6)	21.52 (546.7)	23.04 (585.3)
	120	3000	a_1	6.42 (163.1)	7.10 (180.4)	7.77 (197.4)	8.45 (214.7)	9.13 (232.0)	9.82 (249.5)	10.53 (267.5)
			h	15.76 (400.4)	17.4 (442.0)	19.03 (483.4)	20.67 (525.1)	22.32 (567.0)	23.99 (609.4)	25.69 (652.6)

Table 12.89
a_1 and h_1, at discharge pulley for 35° troughing carrying idlers

WWW.CEMANET.ORG has issued this document to Vidyut Sadhana, Thailand

	Three equal length roll troughing 45° Idlers h and a_1 values in inches (mm) based on cross section loads from Tables 4.41 through 4.48 and troughed belt profile 12.85 (1/2 standard edge distance)									
	Surcharge Angle			0°	5°	10°	15°	20°	25°	30°
Belt Width	18	500	a_1	0.90 (22.9)	1.00 (25.4)	1.08 (27.5)	1.16 (29.5)	1.22 (31.0)	1.31 (33.3)	1.39 (35.4)
			h	2.25 (57.2)	2.44 (62.0)	2.63 (66.9)	2.82 (71.7)	3.01 (76.5)	3.2 (81.3)	3.4 (86.4)
	24	600	a_1	1.31 (33.3)	1.39 (35.4)	1.51 (38.4)	1.62 (41.2)	1.74 (44.2)	1.84 (46.8)	1.95 (49.6)
			h	3.20 (81.3)	3.46 (87.9)	3.72 (94.5)	3.98 (101.1)	4.24 (107.7)	4.51 (114.6)	4.78 (121.5)
	30	800	a_1	1.67 (42.5)	1.84 (46.8)	1.95 (49.6)	2.11 (53.6)	2.25 (57.2)	2.39 (60.8)	2.52 (64.1)
			h	4.15 (105.5)	4.48 (113.8)	4.81 (122.2)	5.14 (130.6)	5.48 (139.2)	5.82 (147.9)	6.16 (156.5)
	36	1000	a_1	2.09 (53.1)	2.25 (57.2)	2.4 (61.0)	2.59 (65.8)	2.74 (69.6)	2.91 (74.0)	3.10 (78.8)
			h	5.10 (129.6)	5.5 (139.7)	5.90 (149.9)	6.31 (160.3)	6.71 (170.5)	7.12 (180.9)	7.54 (191.6)
	42		a_1	2.46 (62.5)	2.67 (67.9)	2.85 (72.4)	3.06 (77.8)	3.25 (82.6)	3.44 (87.4)	3.66 (93.0)
			h	6.05 (153.7)	6.52 (165.7)	6.99 (177.6)	7.47 (189.8)	7.94 (201.7)	8.42 (213.9)	8.92 (226.6)
	48	1200	a_1	2.85 (72.4)	3.08 (78.3)	3.30 (83.9)	3.54 (90.0)	3.75 (95.3)	3.98 (101.1)	4.22 (107.2)
			h	7.00 (177.8)	7.54 (191.6)	8.08 (205.3)	8.63 (219.3)	9.17 (233.0)	9.73 (247.2)	10.29 (261.4)
	54	1400	a_1	3.23 (82.1)	3.49 (88.7)	3.74 (95.0)	4.00 (101.6)	4.26 (108.3)	4.53 (115.1)	4.78 (121.5)
			h	7.95 (202.0)	8.56 (217.5)	9.17 (233.0)	9.79 (248.7)	10.41 (264.5)	11.04 (280.5)	11.67 (296.5)
	60	1600	a_1	3.62 (92.0)	3.91 (99.4)	4.20 (106.7)	4.48 (113.8)	4.76 (121.0)	5.05 (128.3)	5.35 (135.9)
			h	8.90 (226.1)	9.58 (243.4)	10.27 (260.9)	10.95 (278.2)	11.64 (295.7)	12.34 (313.5)	13.05 (331.5)
	72	1800	a_1	4.41 (112.1)	4.74 (120.4)	5.09 (129.3)	5.43 (138.0)	5.78 (146.9)	6.12 (155.5)	6.48 (164.6)
			h	10.8 (274.4)	11.62 (295.2)	12.45 (316.3)	13.27 (337.1)	14.1 (358.2)	14.95 (379.8)	15.81 (401.6)
	84	2000	a_1	5.18 (131.6)	5.57 (141.5)	5.97 (151.7)	6.38 (162.1)	6.78 (172.3)	7.19 (182.7)	7.61 (193.3)
			h	12.7 (322.6)	13.66 (347.0)	14.63 (371.7)	15.59 (396.0)	16.57 (420.9)	17.56 (446.1)	18.56 (471.5)
	96	2400	a_1	5.95 (151.2)	6.41 (162.9)	6.87 (174.5)	7.33 (186.2)	7.79 (197.9)	8.26 (209.9)	8.74 (222.0)
			h	14.59 (370.6)	15.7 (398.8)	16.81 (427.0)	17.92 (455.2)	19.03 (483.4)	20.16 (512.1)	21.32 (541.6)
	108	2800	a_1	6.73 (171.0)	7.24 (183.9)	7.76 (197.2)	8.28 (210.4)	8.8 (223.6)	9.33 (237.0)	9.87 (250.7)
			h	16.49 (418.9)	17.74 (450.6)	18.99 (482.4)	20.24 (514.1)	21.5 (546.1)	22.77 (578.4)	24.08 (611.7)
	120	3000	a_1	7.51 (190.8)	8.08 (205.3)	8.65 (219.8)	9.23 (234.5)	9.81 (249.2)	10.40 (264.2)	11 (279.4)
			h	18.39 (467.2)	19.78 (502.5)	21.17 (537.8)	22.56 (573.1)	23.96 (608.6)	25.38 (644.7)	26.83 (681.5)

Table 12.90
a_1 and h_1, at discharge pulley for 45° troughing carrying idlers

WWW.CEMANET.ORG has issued this portion of the Standard for Purchase Agreement Purposes Only. Any other use is prohibited.

	Flat Idlers h and a_1 values in inches (mm) based on cross section loads from Tables 4.41 through 4.48 and troughed belt profile 12.85 (1/2 standard edge distance)									
	Surcharge Angle			0°	5°	10°	15°	20°	25°	30°
Belt Width	18	500	a_1	N/A	0.12 (3.1)	0.25 (6.4)	0.46 (11.7)	0.49 (12.5	0.67 (17.1	0.76 (19.4
			h	N/A	0.30 (7.7)	0.62 (15.8)	0.94 (23.9)	1.25 (31.8	1.58 (40.2	1.90 (48.3
	24	600	a_1	N/A	0.18 (4.6)	0.63 (16.1)	0.53 (13.5)	0.68 (17.3)	0.86 (21.9	1.10 (28.0
			h	N/A	0.43 (11.0)	0.86 (21.9)	1.29 (32.8)	1.72 (43.7)	2.17 (55.2	2.63 (66.9
	30	800	a_1	N/A	0.22 (5.6)	0.55 (14.0)	0.77 (19.6)	0.94 (23.9)	1.10 (28.0	1.36 (34.6)
			h	N/A	0.55 (14.0)	1.09 (27.7)	1.64 (41.7)	2.20 (55.9)	2.76 (70.2)	3.34 (84.9)
	36	1000	a_1	N/A	0.25 (6.4)	0.34 (8.7)	0.90 (22.9)	1.13 (28.8)	1.38 (35.1)	1.64 (41.7)
			h	N/A	0.66 (16.8)	1.32 (33.6)	1.99 (50.6)	2.67 (67.9)	3.36 (85.4)	4.05 (102.9)
	42		a_1	N/A	0.31 (7.9)	0.73 (18.6)	0.94 (23.9)	1.29 (32.8)	1.61 (40.9)	1.93 (49.1)
			h	N/A	0.78 (19.9)	1.56 (39.7	2.34 (59.5)	3.14 (79.8)	3.95 (100.4)	4.77 (121.2)
	48	1200	a_1	N/A	0.35 (8.9)	0.85 (21.6)	1.09 (27.7)	1.50 (38.1)	1.87 (47.5)	2.22 (56.4)
			h	N/A	0.89 (22.7)	1.79 (45.5)	2.69 (68.4)	3.61 (91.7)	4.54 (115.4)	5.48 (139.2)
	54	1400	a_1	N/A	0.39 (10.0)	0.84 (21.4)	1.19 (30.3)	1.66 (42.2)	2.09 (53.1)	2.52 (64.1)
			h	N/A	1.01 (25.7)	2.02 (51.4)	3.04 (77.3)	4.08 (103.7)	5.13 (130.4)	6.20 (157.5)
	60	1600	a_1	N/A	0.43 (11.0)	0.89 (22.7)	1.34 (34.1)	1.82 (46.3)	2.34 (59.5)	2.82 (71.7)
			h	N/A	1.13 (28.8)	2.26 (57.5)	3.40 (86.4)	4.55 (115.6)	5.72 (145.3)	6.92 (175.8)
	72	1800	a_1	N/A	0.53 (13.5)	1.20 (30.5)	1.65 (42.0)	2.24 (56.9)	2.81 (71.4)	3.4 (86.4)
			h	N/A	1.36 (34.6)	2.73 (69.4)	4.10 (104.2)	5.49 (139.5)	6.91 (175.6)	8.35 (212.1)
	84	2000	a_1	N/A	0.62 (15.8)	1.37 (34.8)	1.96 (49.8)	2.61 (66.3)	3.29 (83.6)	3.99 (101.4)
			h	N/A	1.59 (40.4)	3.19 (81.1)	4.80 (122.0)	6.43 (163.4)	8.09 (205.5)	9.78 (248.5)
	96	2400	a_1	N/A	0.71 (18.1)	1.47 (37.4)	2.24 (56.9)	2.99 (76.0)	3.78 (96.1)	4.57 (116.1)
			h	N/A	1.83 (46.5)	3.66 (93.0)	5.51 (140.0)	7.38 (187.5)	9.28 (235.8)	11.21 (284.8)
	108	2800	a_1	N/A	0.8 (20.4)	1.59 (40.4)	2.55 (64.08)	3.39 (86.2)	4.26 (108.3)	5.15 (130.9)
			h	N/A	2.06 (52.4)	4.13 (105.0)	6.21 (157.8)	8.32 (211.4)	10.46 (265.7)	12.65 (321.4)
	120	3000	a_1	N/A	0.89 (22.7)	1.83 (46.5)	2.78 (70.7)	3.78 (96.1)	4.74 (120.4)	5.73 (145.6)
			h	N/A	2.29 (58.2)	4.59 (116.6)	6.91 (175.6)	9.26 (235.3)	11.65 (296.0	14.08 (357.7)

Table 12.91
a_1 and h_1, at discharge pulley for flat idlers

Horizontal, Inclined and Declined Conveyor Belt Trajectories

Angular Tangent Direction

The angular direction of the trajectory is determined by the forces acting on the material at its center of mass. Were it not for the effect of gravity, the median line of the trajectory would be a straight line. It is this straight line tangent to a circle, the radius of which is the distance from the pulley center to the center of gravity of the material load-shape cross section, that determines what angular direction the trajectory will take.

www.CEMANDOR has issued this document (1904) on ATTENTION! It is prohibited to distribute without permission. Guaranteed by Chaillet

Fundamental Force-Velocity Relationships

Fundamentally, if the tangential velocity is V_s, and if g is the acceleration due to gravity; r_s is the radial distance from the center of the pulley to the center of mass (i.e., the cross-sectional center of gravity of the material load shape); and W is the gravity weight force of the material acting at the center of mass, then the centrifugal force acting at the center of mass of the material is as follows:

$$\text{Centrifugal Force} = \frac{W \times V_s^2}{g \times r_s}$$

Equation 12.92
Centrifugal force

When this centrifugal force equals the radial component of the material weight force, W, the material will no longer be supported by the belt and will commence its trajectory. At just what angular position around the pulley this will occur is governed by the slope of the conveyor at the discharge and pulley is described for the following three conditions: horizontal, inclined and declined conveyor trajectories. Equation 12.92 can be re-written to provide and expression used to determine where the material will start its trajectory.

$$\frac{\text{Centrifugal Force}}{W} = \frac{V_s^2}{g \times r_s}$$

Equation 12.93
Relationship used to determine trajectory starting point, e_t

$$\text{If } \frac{V_{belt}^2}{g \times r_s} > 1.0 \text{ then } V_s = V, \text{ If no then : If } \frac{V_{cg}^2}{g \times r_s} < 1.0 \text{ then : } V_s = V_{cg}, \text{ If no then: } V_s = \sqrt{g \times r_s}$$

Figure 12.94
Test used to determine the tangential velocity, V_s, used for plotting the trajectory

Belt Trajectory Nomenclature

a_1 = Distance from the belt to the center of gravity of the load shape
cg = Center of gravity of the cross section of the load shape
e_t = Point where the material leaves the belt
g = Acceleration due to gravity
h = Distance from the belt to the top of the load shape
r_p = Radius of the pulley
r_s = Radius from the center of pulley to the cross-sectional center of gravity of the load shape
t = Thickness of the belt
V = Belt speed
V_s = Tangential velocity, fps, of the cross-sectional area center of gravity of the load shape
W = Weight of bulk material acting at center of gravity
γ = Angle between pulley vertical centerline and point e_t (degrees)
ϕ = Angle of incline of the belt conveyor to the horizontal (degrees)

Figure 12.95
Discharge trajectory nomenclature

www.conveyor-engineering.com document (1460) on Apr 04, 2015 to Patrapon Sirakool, Standang, Thailand

Horizontal Belt Conveyor Trajectories

If the belt conveyor is horizontal to the discharge pulley, there are two cases to consider:

Horizontal Belt Conveyor Discharge Trajectory Case 1

If the tangential speed is sufficiently high, when the centrifugal force is equal to or greater than W, the material will leave the belt at the initial point of tangency of the belt with the pulley. Belt speed, V, is used to plot the trajectory.

$$\frac{V_s^2}{g \times r_s} > 1.0$$

Equation 12.96
Discharge trajectory velocity test for case 1

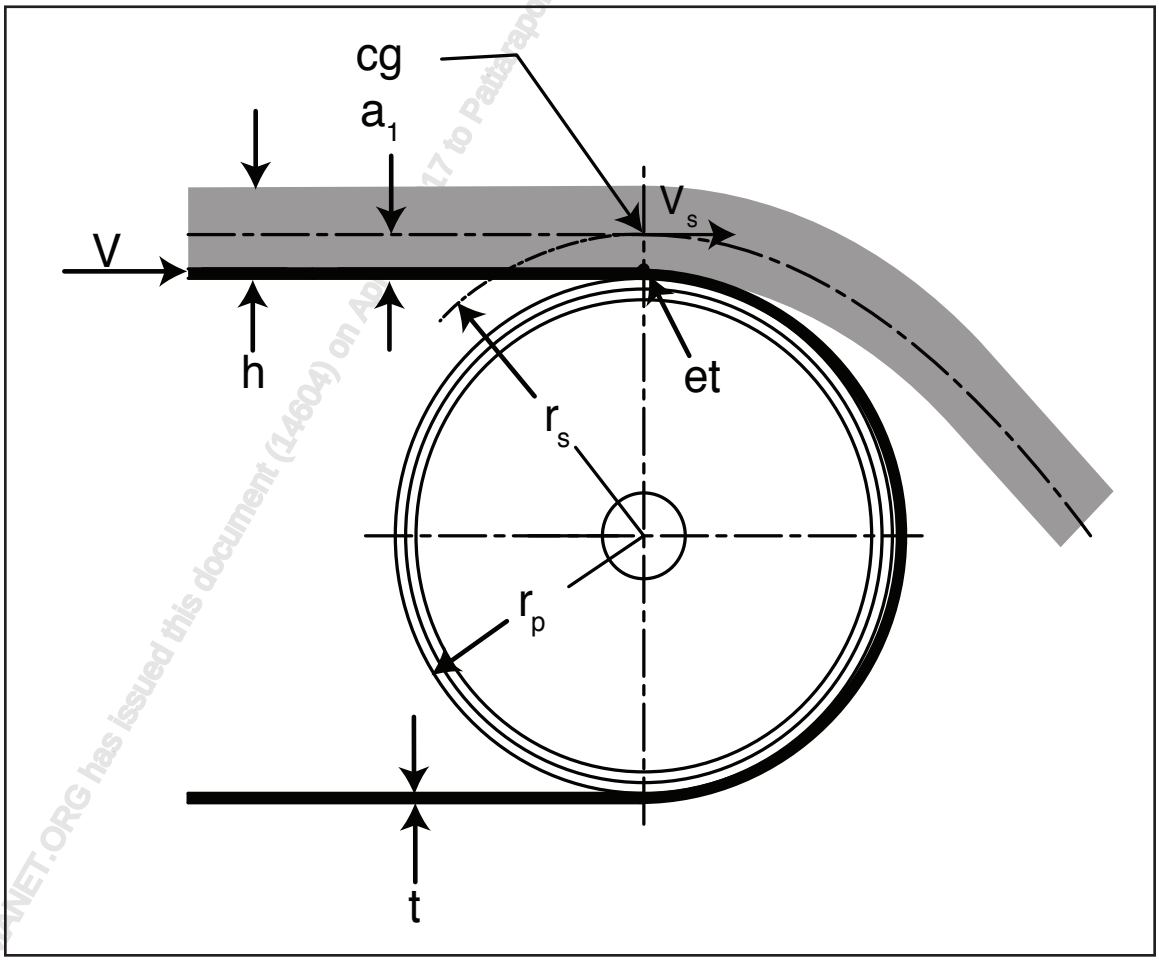

Figure 12.97
Discharge trajectory case 1

WWW.CEMANET.ORG has issued this document (14604) on ADD-17 to Pattarapom Sakkool, Seahua Co., Thailand

Horizontal Belt Conveyor Discharge Trajectory Case 2

If the tangential speed is not high enough for the material to leave the belt at the initial point of tangency, then the material will follow part way around the pulley for an angular distance. Tangential velocity, $V_{s.}$, is used for plotting the trajectory.

$$\frac{V_s^2}{g \times r_s} < 1.0$$

Equation 12.98
Discharge trajectory velocity test for case 2

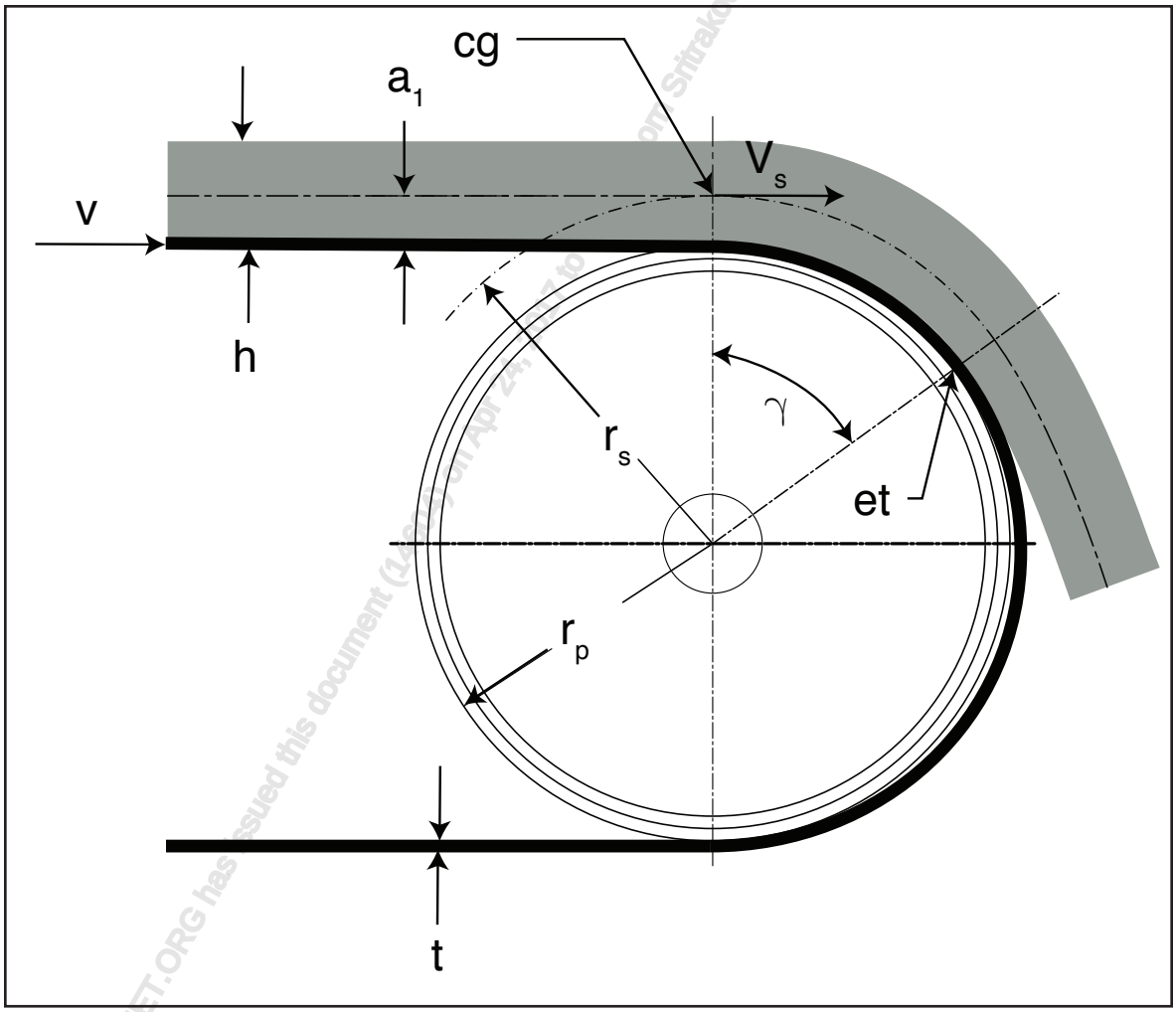

Figure 12.99
Discharge trajectory case 2

WWW.CEMNET.ORG has issued this document (1466) on Apr 24, 2017 to ... on Sritrakool, Suanluang, , , Thailand

Inclined Belt Conveyor Trajectories

For a belt inclined to the discharge pulley, there are four conditions to consider.

Inclined Belt Conveyor Discharge Trajectory Case 3

If the tangential speed is sufficiently high, the material leaves the belt at the initial point of tangency of the belt and pulley. Belt speed, V, is used for plotting the trajectory.

$$\frac{V_s^2}{g \times r_s} > 1.0$$

Equation 12.100
Discharge trajectory velocity test for case 3

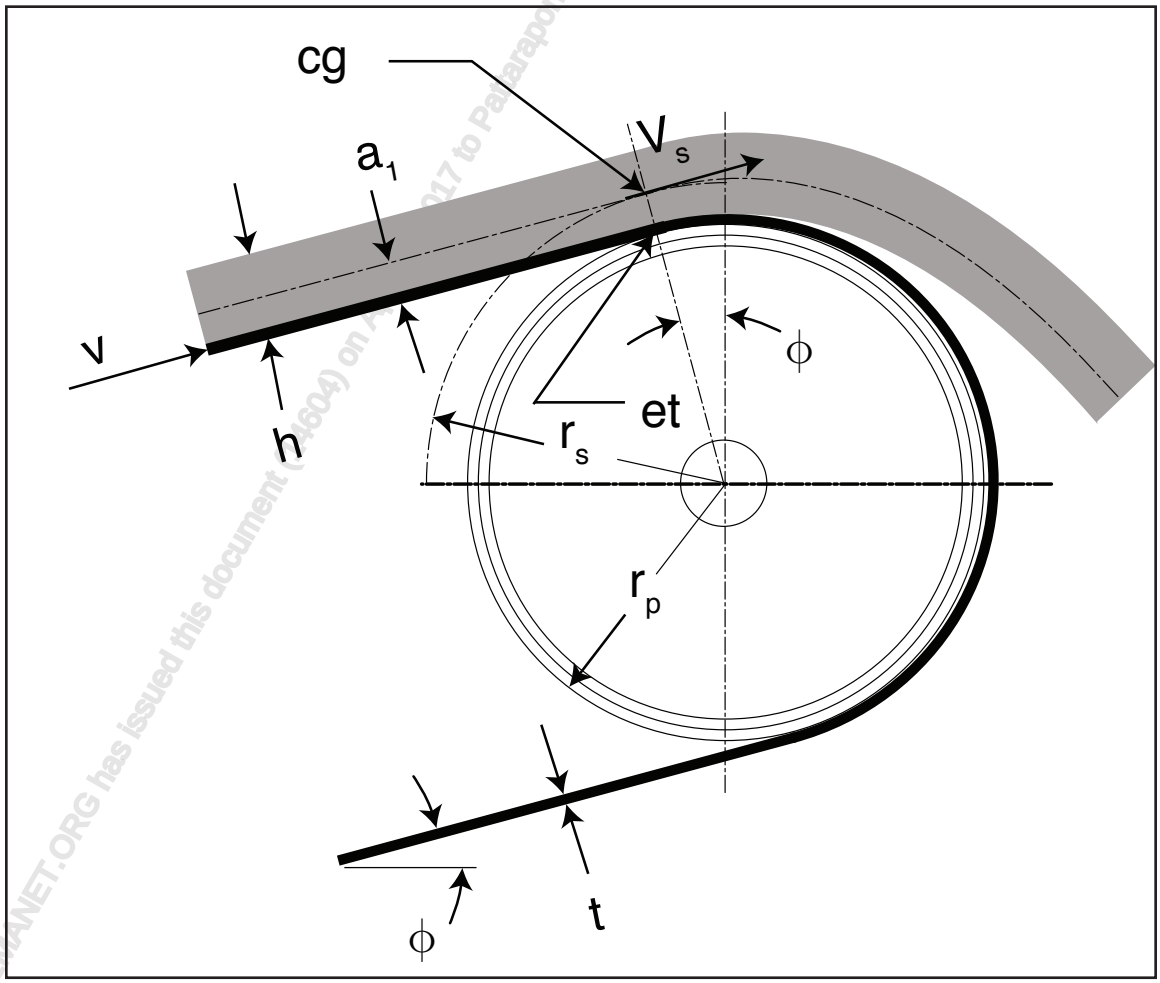

Figure 12.101
Discharge trajectory case 3

WWW.CEMANET.ORG has issued this document (4604) on [illegible]017 to Pattarapom Sirisopol, Stamford, Thailand

Inclined Belt Conveyor Discharge Trajectory Case 4

If the tangential speed is such that the centrifugal force is l.0, the material will leave the belt at the vertical center line through the pulley. This is a special case and tangential velocity, $V_s = (r_s \times g)^{1/2}$, is used for plotting the trajectory.

$$\frac{V_s^2}{r_s \times g} = 1.0$$

Equation 12.102
Discharge trajectory velocity test for case 4

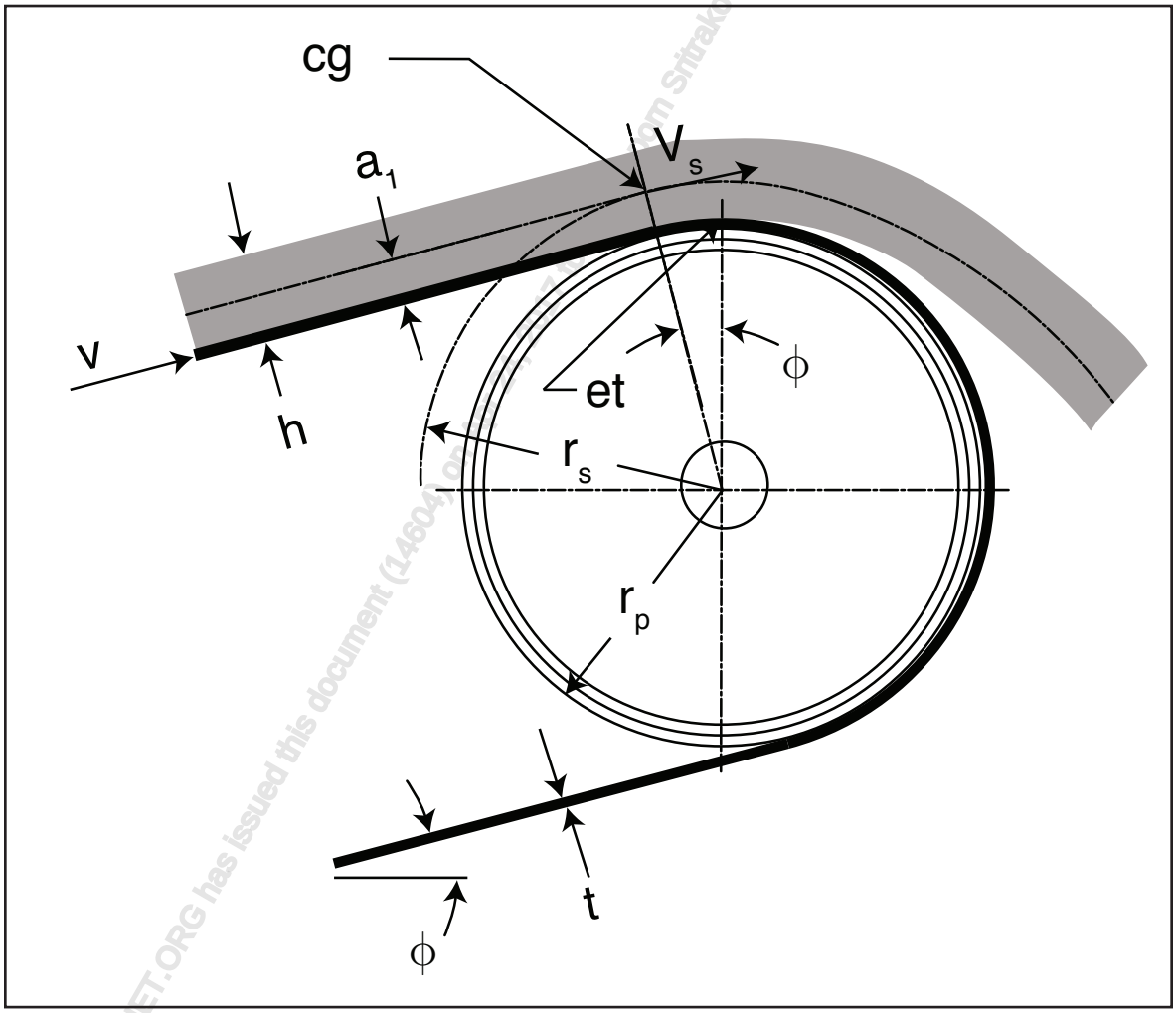

Figure 12.103
Discharge trajectory case 4

www.CEMNET.ORG has issued this document (14604) to [illegible] Sritrakool, Suanluang, , Thailand

Inclined Belt Conveyor Discharge Case 5

If the tangential speed is sufficiently low, or when the centrifugal force is less than cos(ϕ), the material will travel partially around the pulley an angular distance, beyond its top center to the point where the centrifugal force equals the cos(γ). Tangential velocity, V_s, is used to plot the trajectory.

$$\frac{V_s^2}{g \times r_s} < \cos(\phi)$$

Equation 12.104
Discharge trajectory velocity test for case 5

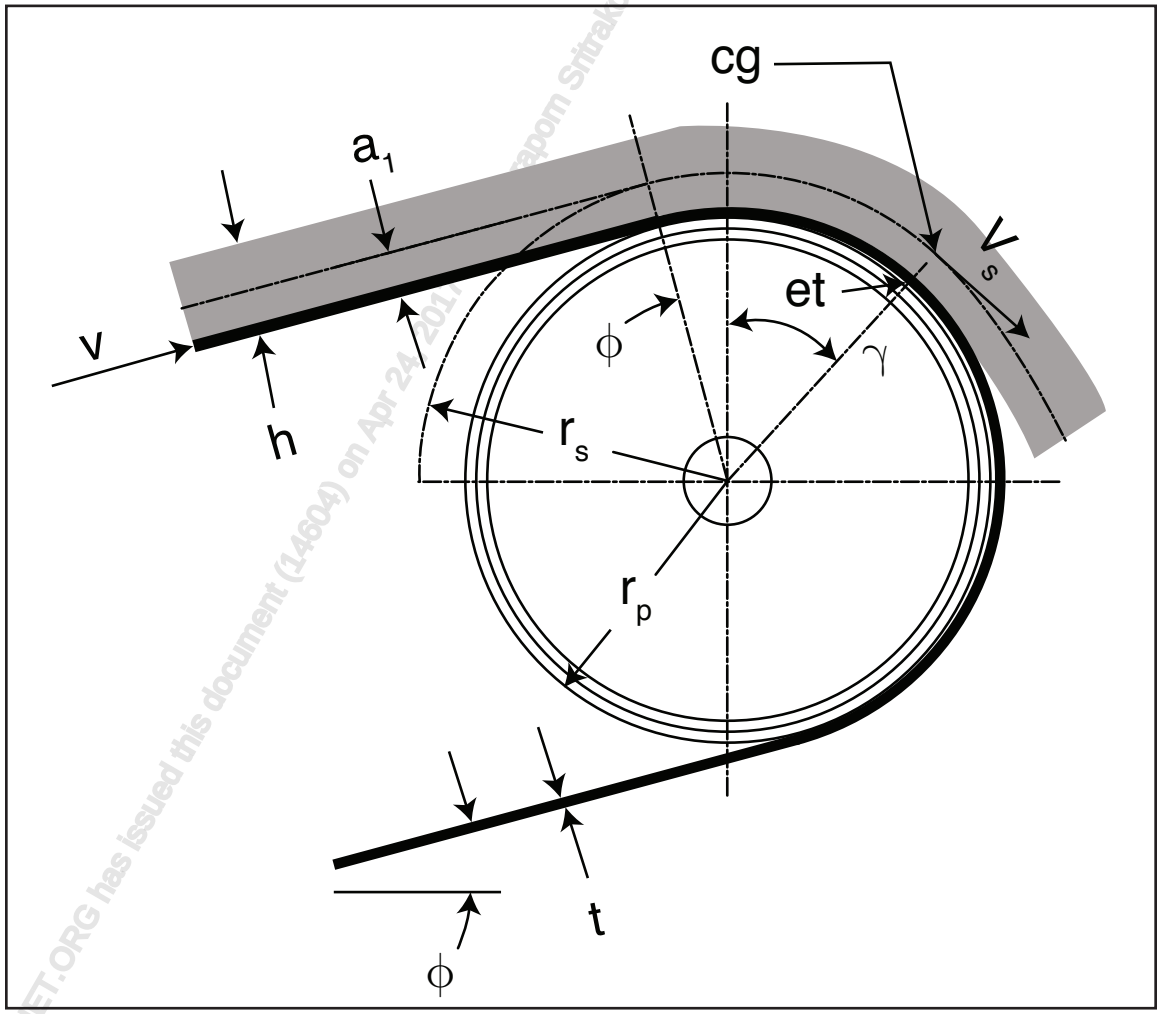

Figure 12.105
Discharge trajectory case 5

WWW.CEMANET.ORG has issued this document (14604) on Apr 24, 2011 to Prapom Sritrakool, Suanluang, , Thailand

Note:
If the combination of the belt incline, the pulley diameter, the load depth, and the tangential belt speed is such that the centrifugal force is greater than the cos(ϕ) but is still less than l.0, the material may leave the belt at the initial point of tangency of the belt and the pulley. However, the curved surface of the belt on the pulley may interfere with the theoretical trajectory path of the material. The material may then re-engage the belt and be carried farther around the pulley before it assumes its final trajectory.

Declined Belt Conveyor Trajectories

If the belt conveyor is declined toward the discharge pulley, there are two conditions to consider:

Declined Belt Conveyor Discharge Case 6

If the tangential speed is sufficiently high, or when, the material will leave the belt at the initial point of tangency of the belt and pulley. Belt velocity, V, is used to plot the trajectory.

$$\frac{V_s^2}{g \times r_s} > 1.0$$

Equation 12.106
Discharge trajectory velocity test for case 6

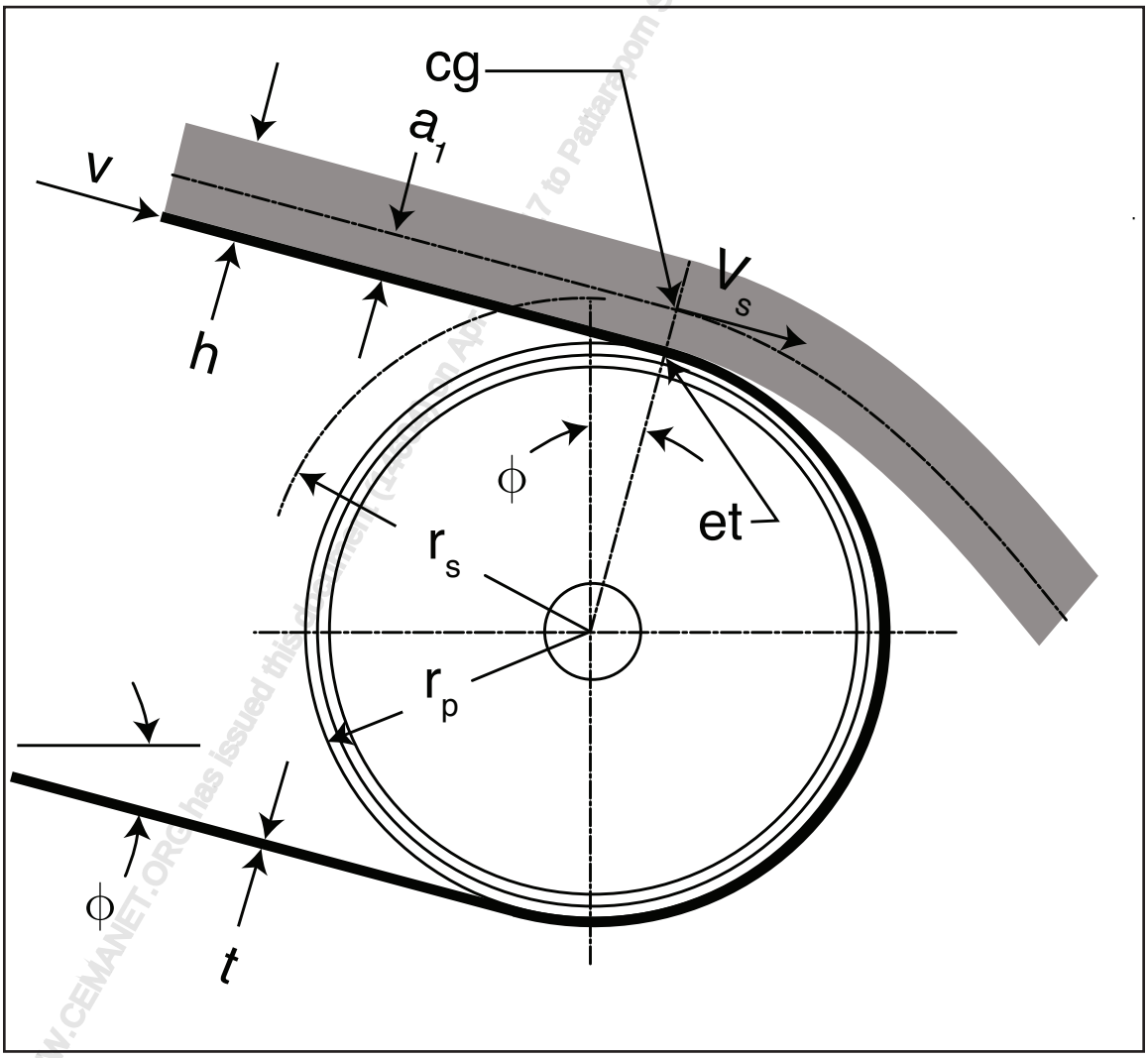

Figure 12.107
Discharge trajectory case 6

WWW.CEMANET.ORG has issued this ... 7 to Pattarapom Sriekool, Suanluang, Thailand

Declined Belt Conveyor Discharge Case 7

If the tangential speed is insufficient to make the material leave the belt at the initial point of tangency of the belt and pulley, the material will follow partly around the pulley. Tangential velocity, V_s, is used for plotting the trajectory.

$$\frac{V_s^2}{g \times r_s} > 1.0$$

Equation 12.108
Discharge trajectory velocity test for case 7

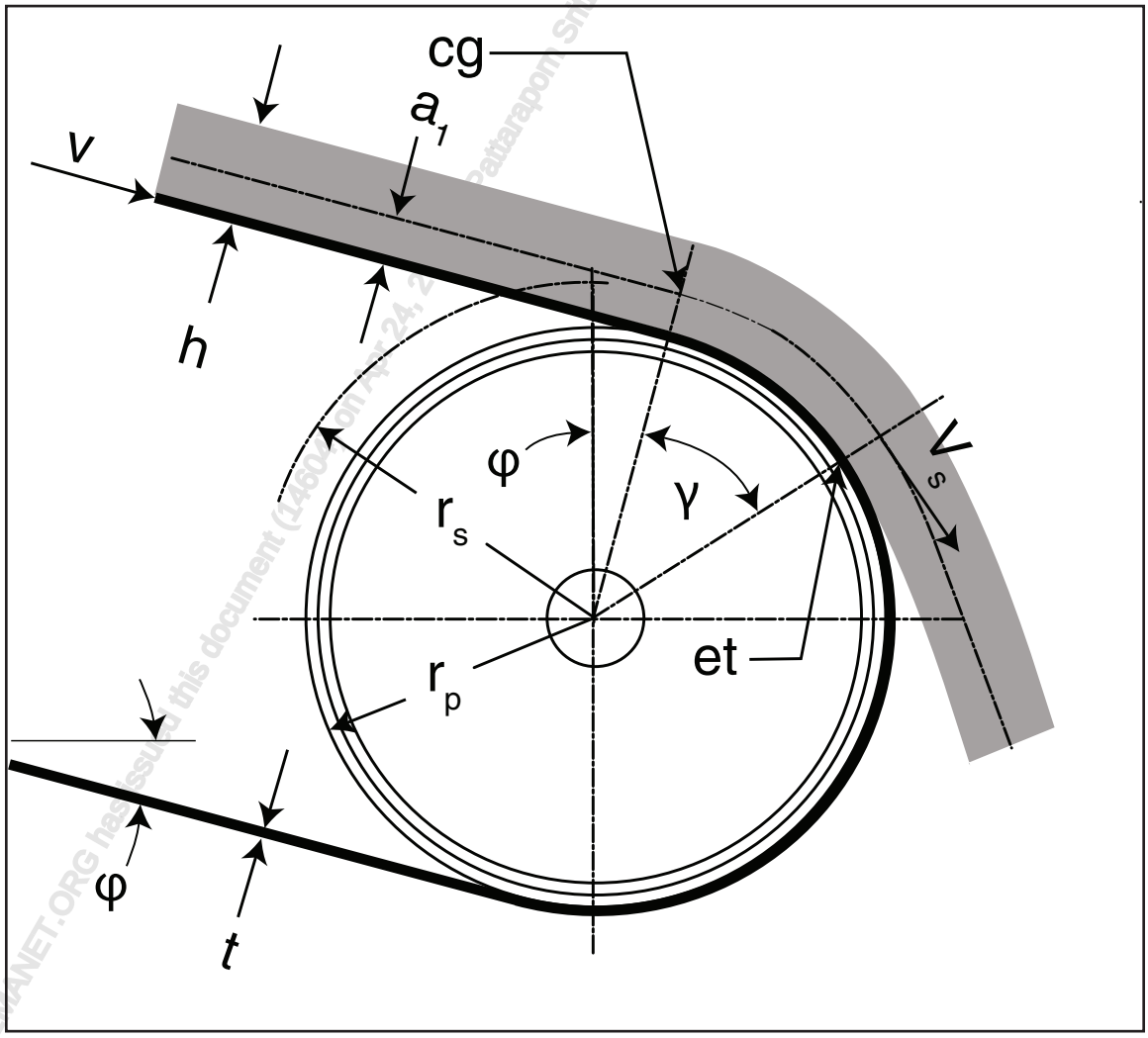

Figure 12.109
Discharge trajectory case 7

WWW.CEMANET.ORG has issued this document (1460) on Apr 24, 2 Pattarapon Sritrakool, Bangkhuang, , Thailand

PLOTTING THE TRAJECTORY

Before the trajectory of the discharged material can be plotted, it is necessary to calculate the values of $V_{s.}$ and r_s in order to solve the expression 12.94. If the value of expression 12.94 is less than 1.0 the trajectory starts at the position defined by the point of tangency between the belt and the pulley and the velocity used for plotting is the design belt speed, V. If expression 12.94 is equal to or greater than 1.0 then the trajectory starts at a position other than the point of tangency between the belt and pulley and the velocity at the center of gravity, $V_{s.}$, is used for plotting the trajectory.

a_1 = Distance above the belt surface of the center of gravity of the cross-section shape of the load, at the point where the pulley is tangent to the belt

h = Distance above the belt surface of the top of the load, at the point where the belt is tangent to the pulley

r_p = Radius of the outer surface of the pulley and lagging

r_s = Radius from the center of the pulley to the center of gravity of the circular segment load cross section

t = Thickness of the belt

V_s = Velocity at the center of gravity of the load cross section used for plotting the trajectory:

1. Belt velocity is used as the velocity of the material at its center of mass if discharge point is at the tangency of the belt-to-discharge pulley (V)
2. Velocity of the material at its center of mass is used as the velocity of the material for all other conditions of discharge after the point of belt-to-discharge pulley tangency. (V_{cg})

Figure 12.110
Trajectory plotting nomenclature

$$r_s = a_1 + t + r_p$$

Equation 12.111
r_s, Radius from pulley center to load cross section center of gravity

The values of a_1 and h have been tabulated for the various belt widths, idler end roll angles, and surcharge angles, for troughed conveyor belts loaded to the standard edge distance [0.055 × BW + 0.9 inch (0.055 × BW+23 mm)], as listed in Table 4.4. $V_{s.}$ should never be calculated from the nominal speed of the belt. It is also necessary to find the height of the flattened load of material on the belt, so that the upper limit of the material path can be plotted. The tangential velocity, $V_{s.}$ in distance per second, should be calculated from the relation:

$$V = \frac{2 \times \pi \times (r_p + t) \times \text{rpm of discharge pulley}}{60}$$

$$V_{cg} = \frac{2 \times \pi \times r_s \times \text{rpm of discharge pulley}}{60}$$

Equation 12.112
$V_{s.}$, Tangential velocity of the center of gravity of the load profile

WWW.CEMA-TOOLS.ORG issued this document (1460) on Apr 27 2017 to Patricia from Sistema de Guanuatos, Peru

Determination of Angular Position of Tangent Line

In order to determine the angular position of the straight line tangent to the circle of radius, r_s, it is necessary to solve the following expression. Then, from the cosine, determine the angles in degrees. Note that if the result is ≥ 1.0 then the angle used is zero.

$$\frac{V_s^2}{g \times r_s} = \cos(\phi), \cos(\theta) \text{ or } \cos(\gamma)$$

Equation 12.113
Determining the angular relationship for tangent of material discharge from the belt

To set up the graphical diagram, draw, to some convenient scale, the pulley rim, the lagging thickness, the belt thickness, the path of the belt; horizontal, inclined, or declined and a circle, with radius, r_s, from the center of the pulley. At the determined point, e_t , draw a straight line tangent to the circle of radius r_s (i.e., perpendicular to the line through the pulley center fixed by the angle ϕ, θ or γ.)

Distance of Material Fall From Tangent Line

The action of gravity will prevent the material from following the tangent line, so the trajectory will lie below it. To measure and plot the amount of fall, it will be convenient to divide the time of fall of the material, resulting from the effect of gravity, into 1/20th seconds (.05 s). To find the actual distance of fall from the tangent line at successive 1/20th second intervals, consult table 12.114.

Time Interval (s)	D_f = Vertical Fall Distance in (mm)	Vertical Velocity ft/min (m/s)		Time Interval (s)	D_f = Vertical Fall Distance in (mm)	Vertical Velocity ft/min (m/s)
0.05	0.483 (12.27)	2.4 (0.012)		0.55	58.39 (1483.11)	291.9 (1.483)
0.10	1.930 (49.02)	9.7 (0.049)		0.60	69.49 (1765.05)	347.4 (1.765)
0.15	4.343 (110.31)	21.7 (0.110)		0.65	81.55 (2071.37)	407.8 (2.072)
0.20	7.721 (196.11)	38.6 (0.196)		0.70	94.58 (2402.33)	472.9 (2.402)
0.25	12.064 (306.93)	60.3 (0.306)		0.75	108.57 (2757.68)	542.9 (2.758)
0.30	17.372 (441.25)	86.9 (0.441)		0.80	123.53 (3137.66)	617.7 (3.138)
0.35	23.645 (600.58)	118.2 (0.600)		0.85	139.46 (3542.28)	697.3 (3.542)
0.40	30.883 (784.43)	154.4 (0.784)		0.90	156.35 (3971.29)	781.7 (3.971)
0.45	39.087 (992.81)	195.4 (0.993)		0.95	174.20 (4424.68)	871.0 (4.425)
0.50	48.255 (1225.68)	241.3 (1.226)		1.00	193.02 (4902.71)	965.1 (4.903)

Table 12.114
Time, distance and velocity for discharge trajectories

Measurement of the Time Interval

The determination of the interval of time along the tangent line depends upon the calculated tangential velocity, $V_{s.}$ (at radius r_s). It will be helpful, in making the layout of the trajectory diagram, to recognize that the distance increments for each l/20th of a second of time correspond to 0.6 inches for each foot per second (50 mm per meter per second) of the tangential velocity, $V_{s.}$. Note that for cases X and Y the belt velocity, V, is used since the discharge is determined to start at the point of belt and pulley tangency before the load begins a circumferential path.

www.BANTEX.co.th Issued No. 0001 (1/1/60) on Aug 04, 2017 to Pattanapol Sirakoon, Suanluang, Thailand

For example, if the calculated tangential velocity, V_s, is l.0 fps, lay out the time intervals on the tangent line from point e_t at 0.6 inch; if the tangential velocity is 2.0 fps, lay out the intervals at 1.2 inches; if 3.0 fps, lay out the intervals at 1.8 inches; (V_s = 1.0 m/s then 50 mm, 2.0 m/s then 100 mm, 3.0 m/s then 150 mm) etc. If the tangential velocity is some fraction of a foot per second (a meter per second), multiply this fraction by 0.6 inch (50 mm) and lay out the intervals accordingly.

1. Start the layout of time intervals on the tangent line from point e_t, the start of the line tangent to the circle of radius r. Number each interval consecutively, 0 for the point of tangency (point e_t), 1 for the first 1/20th second, 2 for the next, and so on.
2. Draw a series of parallel vertical lines downward a suitable distance from each numbered time interval and directly on the tangent line (except the zero number).
3. Lay out on these vertical lines the corresponding distance of fall from the tangent line. To do this, measure vertically downward from each numbered point on the tangent line.
4. Draw a smooth curve through the fall points. This is the median line of the trajectory of the material.

Limits of the Trajectory Path

Having established the median line of the trajectory, lay out a top-of-the-trajectory line with the distance ($h - a_1$), using Tables 12.88 through 12.91. Distance ($h - a_1$) is the radius of partial circles drawn above and around each fall point. The top limit of the trajectory of normal materials will be a smooth curve drawn tangent to these partial circles. The value of h must be to the same scale as the diagram.

Similarly, the underside limit of the material path should be a smooth curve, tangent to partial circles drawn below and around each fall point. The circles will have a radius equal to the value of a_1, which also must be to the same scale as the diagram. For the individual trajectories of single large lumps, use r as the distance from the center of the lump to the center of the pulley. Calculate the tangential velocity, $V_{s,}$ of the lump using Equation 12.94, substituting the lump radial location for r_s.

The lateral dimension, or width, of the trajectory path of the material will be very close to the length of the circular segment chord "C" in Figures 12.85 and 12.86. This is approximately BW- 0.055 × BW - 0.9 inch [BW- 0.055 × BW - 23 (mm)] for troughed belts, or BW -2 × (0.055 × BW + 0.9 inch) [BW- 2 × (0.055 × BW) - 23 (mm)] for flat belts, where BW is the belt width.

The lateral dimension, or width, of the material path is affected by the height of fall and the characteristics of the material. With respect to long falls below the discharge pulley, light, fluffy materials or large lumps mixed with fines, allowance for aberrations in the trajectory limits of such materials must be made when designing discharge chutes.

On slow belts, such as feeders, the load may slough off at the angle of repose in intermittent surges rather than as a continuous stream.

Special Condition

When evaluating the function $\frac{V^2}{g \times r_s}$ and the result is not ≥ 1.0 when using V, belt speed, and $\frac{V_s^2}{g \times r_s}$

is not ≤ 1.0 using V_s, Then $V_s = \sqrt{g \times r_s}$, is used for plotting the trajectory.

EXAMPLES OF TRAJECTORIES

The following seven examples of plotted trajectories and trajectory limits of uniform materials discharged over the ends of troughed belt conveyors, which are shown in Figures 12.115 through 12.121, may be helpful. All these examples are based on 30 inch (762 mm) troughed conveyor belts operating horizontally, inclined, or declined, at various speeds, on 20 degree three-equal-roll troughing idlers, and with 24-inch (600 mm) diameter discharge pulleys.

Example Case 1 Horizontal Conveyor

Where:

$$\frac{V^2}{r_s \times g} = 1.18 \geq 1.0 \therefore \text{ use } V_s = V$$

Given:

Three equal roll 20° standard troughing idlers
ϕ = 0°
BW = 30 in (762 mm)
t = 0.44 in (11.11 mm)
V = 400 fpm (2.03 m/s)
r_p = 12.00 in (304.8 mm)
ϕ_s = 20° (surcharge angle)
h = 4.05 in (102.9 mm) From Table 12.88
a_1 = 1.65 in (41.9 mm) From Table 12.88

Calculate tangential velocity at the center of gravity:

$$r_s = \frac{12.0 + .44 + 1.65}{12} = 1.17 \text{ ft}$$

$$\text{Pulley rpm} = \frac{V}{2 \times \pi \times \left(\frac{r_p + t}{12}\right)} = \frac{250}{6.51} = 38.40 \text{ rpm}$$

$$V_s = \frac{2 \times \pi \times r_s \times \text{Pulley rpm}}{60 \text{ (s/min)}} = 4.70 \text{ fps}$$

Determine if point e_t is at the tangent point:

$$\frac{V_s^2}{r_s \times g} = \frac{(7.52)^2}{32.17 \times 1.17} = 1.50$$

Since $\frac{V^2}{g \times r_s}$ >1.0 point e_t is at tangent point between the belt and pulley, use belt speed, V, for plotting.

WWW.CEMANET.ORG has issued this document (3460) on Apr 4, 2012 to Pasarapon Sirikool, Suanluang, Thailand

Time interval, TI, for plotting the trajectory in increments of 0.05 seconds is:

$$TI = 0.05\ (s) \times \frac{400\ (fpm)}{60(s/min)} = 0.333\ ft = 4.0\ in$$

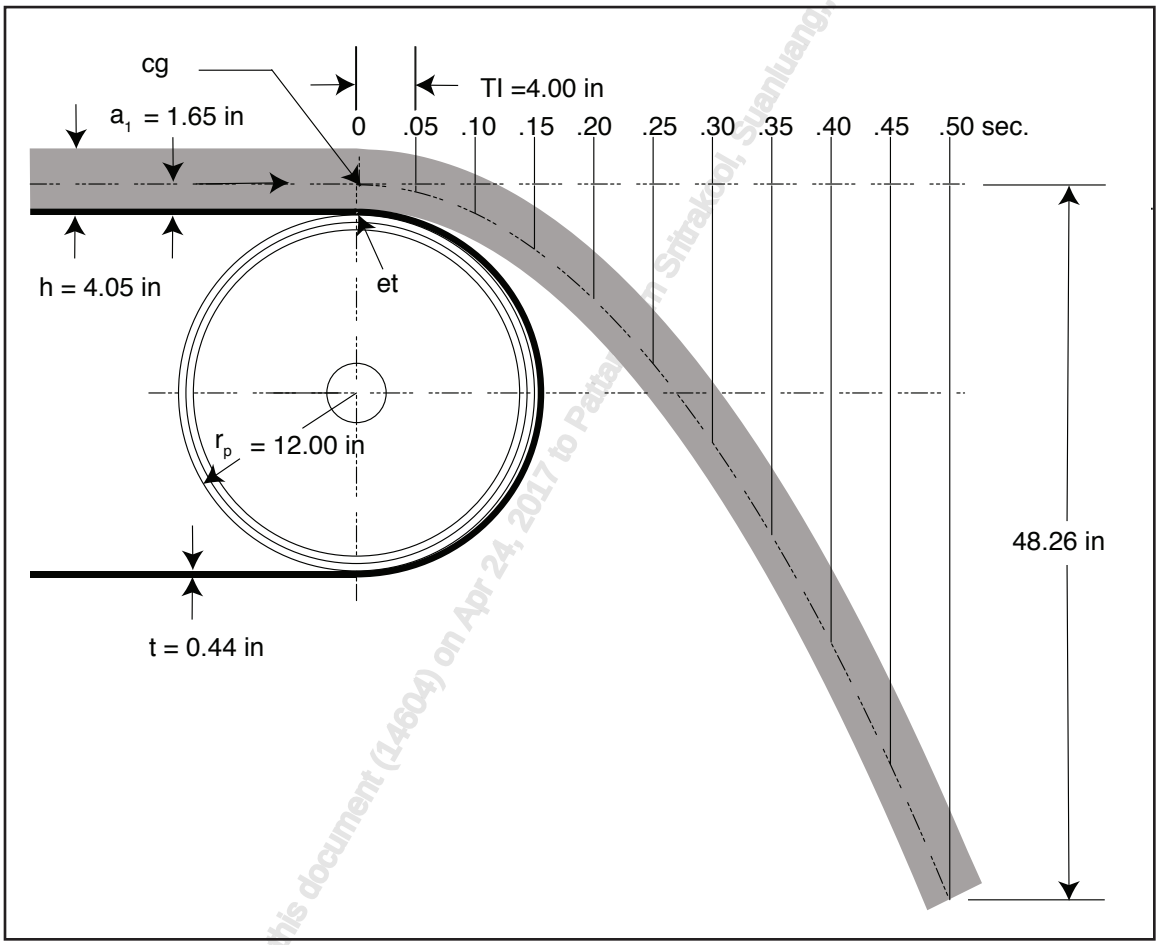

Figure 12.115
Trajectory case 1 example

WWW.CEMANET.ORG has issued this document (14604) on Apr 24, 2017 to Pattarapon Sritrakool, Suanluang, , Thailand

Example Case 2 Horizontal Conveyor

Where:

$$\frac{V^2}{r_s \times g} = 0.461 \text{ not } \geq 1.0 \qquad \frac{V_s^2}{r_s \times g} = 0.587 \text{ is } < 1.0 \therefore \text{ use } V_s = V_s$$

Given:

Three equal roll 20° standard troughing idlers
ϕ = 15°
BW = 30 in (762 mm)
t = 0.44 in (11.11 mm)
V = 250 fpm (1.27 m/s)
r_p = 12.00 in (304.8 mm)
ϕ_s = 20° (surcharge angle)
h = 4.05 in (102.9 mm) From Table 12.86
a_t = 1.65 in (41.9 mm) From Table 12.86

Calculate tangential velocity at the center of gravity

$$r_s = \frac{12.0 + .44 + 1.65}{12} = 1.17 \text{ ft}$$

$$\text{Pulley rpm} = \frac{V}{2 \times \pi \times \left(\frac{r_p + t}{12}\right)} = \frac{250}{6.51} = 38.40 \text{ rpm}$$

$$V_s = \frac{2 \times \pi \times r_s \times \text{Pulley rpm}}{60 \text{ (s/min)}} = 4.70 \text{ fps}$$

Determine if point e_t is at the tangent point:

$$\frac{V_s^2}{r_s \times g} = \frac{(4.70)^2}{32.17 \times 1.17} = 0.587$$

Since $\frac{V^2}{g \times r_s} < 1.0$ point e_t is at the angle $\Upsilon = \cos^{-1}(0.587) = 54.13°$, use center of gravity tangential speed, V_s, for plotting.

Time interval, TI, for plotting the trajectory in increments of 0.05 seconds is:

TI = 0.05 (s) × 4.70 (fps) = 0.21 ft = 2.82 in

www.CEMAENG.ORG has issued this document (14004) on Apr 24, 2012 to Pearson Siriakool, Sanguan, , Thailand

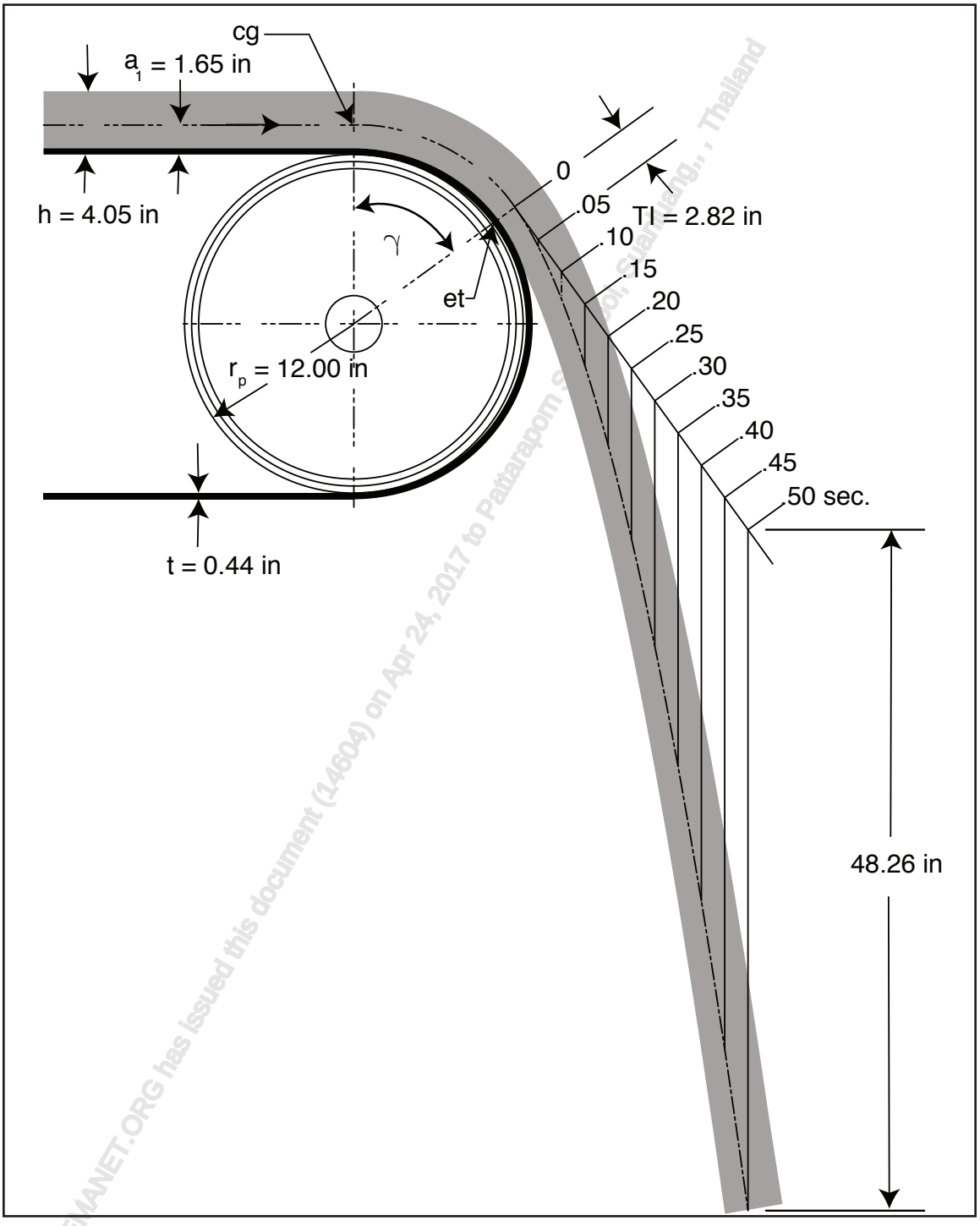

WWW.CEMANET.ORG has issued this document (14604) on Apr 24, 2017 to Pattarapom Sirivon, Siam Cem, Saraburi, , Thailand

Figure 12.116
Trajectory case 2 example

Example Case 3 Inclined Conveyor

Where:

$$\frac{V^2}{r_s \times g} = 1.18 \geq 1.0 \therefore \text{ use } V_s = V$$

Given:

Three equal roll 20° standard troughing idlers
ϕ = 0°
BW = 30 in (762 mm)
t = 0.44 in (11.11 mm)
V = 400 fpm (2.03 m/s)
r_p = 12.00 in (304.8 mm)
ϕ_s = 20° (surcharge angle)
h = 4.05 in (102.9 mm) From Table 12.88
a_t = 1.65 in (41.9 mm) From Table 12.88

Calculate tangential velocity at the center of gravity

$$r_s = \frac{12.0 + .44 + 1.65}{12} = 1.17 \text{ ft}$$

$$\text{Pulley rpm} = \frac{V}{2 \times \pi \times \left(\frac{r_p + t}{12}\right)} = \frac{400}{6.51} = 61.42 \text{ rpm}$$

$$V_s = \frac{2 \times \pi \times r_s \times \text{Pulley rpm}}{60 \text{ (s/min)}} = 7.52 \text{ fps}$$

Determine if point e_t is at the tangent point:

$$\frac{V_s^2}{r_s \times g} = \frac{(7.52)^2}{32.17 \times 1.17} = 1.50$$

Since $\frac{V^2}{g \times r_s} > 1.0$ point e_t is at tangent point between the belt and pulley, use belt speed, V, for plotting.

Time interval, TI, for plotting the trajectory in increments of 0.05 seconds is:

$$TI = 0.05 \text{ (s)} \times \frac{400 \text{ (fpm)}}{60 \text{(s/min)}} = 0.333 \text{ ft} = 4.0 \text{ in}$$

WWW.CEMANET.ORG has issued this document (4604) on Apr 2, 201 to [illegible] Suanluang, , Thailand

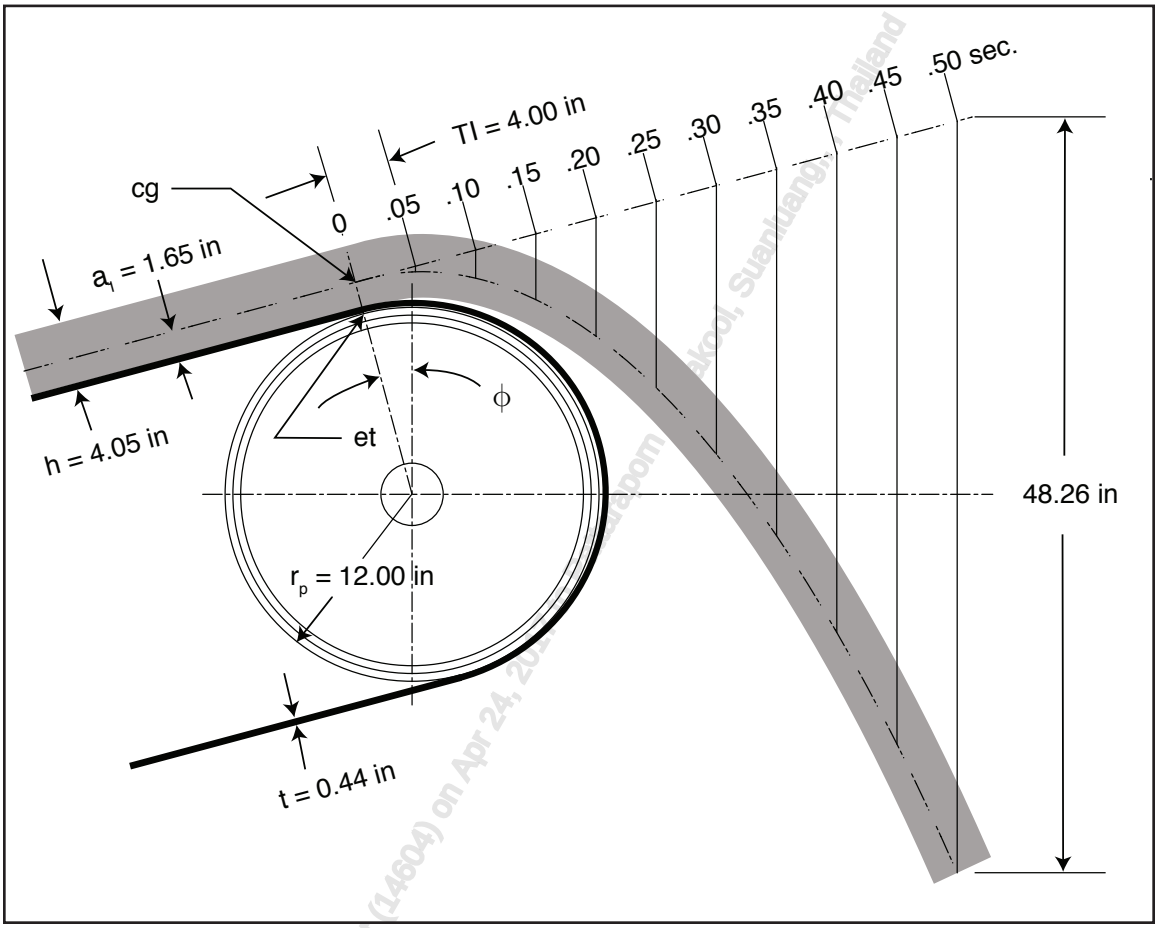

Figure 12.117
Trajectory case 3 example

WWW.CEMANET.ORG has issued this document (14604) on Apr 24, 202

Example Case 4 Inclined Conveyor Special Case

Where:

$$\frac{V^2}{r_s \times g} = 0.79 \text{ not } \geq 1.0 \quad \frac{V_s^2}{r_s \times g} = 1.04 \text{ not } \leq 1.0 \quad \therefore \text{ use } V_s = \sqrt{g \times r_s}$$

Given:

Three equal roll 20° standard troughing idlers
ϕ = 15°
BW = 30 in (762 mm)
t = 0.44 in (11.11 mm)
V = 327 fpm (1.66 m/s)
r_p = 12.00 in (304.8 mm)
ϕ_s = 20° (surcharge angle)
h = 4.05 in (102.9 mm) From Table 12.88
a_t = 1.65 in (41.9 mm) From Table 12.88

Calculate tangential velocity at the center of gravity

$$r_s = \frac{12.0 + .44 + 1.65}{12} = 1.17 \text{ ft}$$

$$\text{Pulley rpm} = \frac{V}{2 \times \pi \times \left(\frac{r_p + t}{12}\right)} = \frac{327}{6.51} = 50.23 \text{ rpm}$$

$$V_s = \frac{2 \times \pi \times r_s \times \text{Pulley rpm}}{60 \text{ (s/min)}} = 6.15 \text{ fps}$$

Determine if point e_t is at the tangent point:

$$\frac{V_s^2}{r_s \times g} = \frac{(6.15)^2}{32.17 \times 1.17} = 1.04$$

Since $\frac{V^2}{g \times r_s} \approx 1.0$ point e_t is very near the vertical center line of the pulley, use center of gravity tangential speed, $V_s = \sqrt{g \times r_s}$ for plotting.

Time interval, TI, for plotting the trajectory in increments of 0.05 seconds is:

TI = 0.05 (s) × 6.15 (fps) = 0.308 ft = 3.69 in

WWW.CEMANET.ORG has issued this document (1560-04) on Apr 24, 2017 (Pitsanupong Sitrakool, Saraburi, Thailand

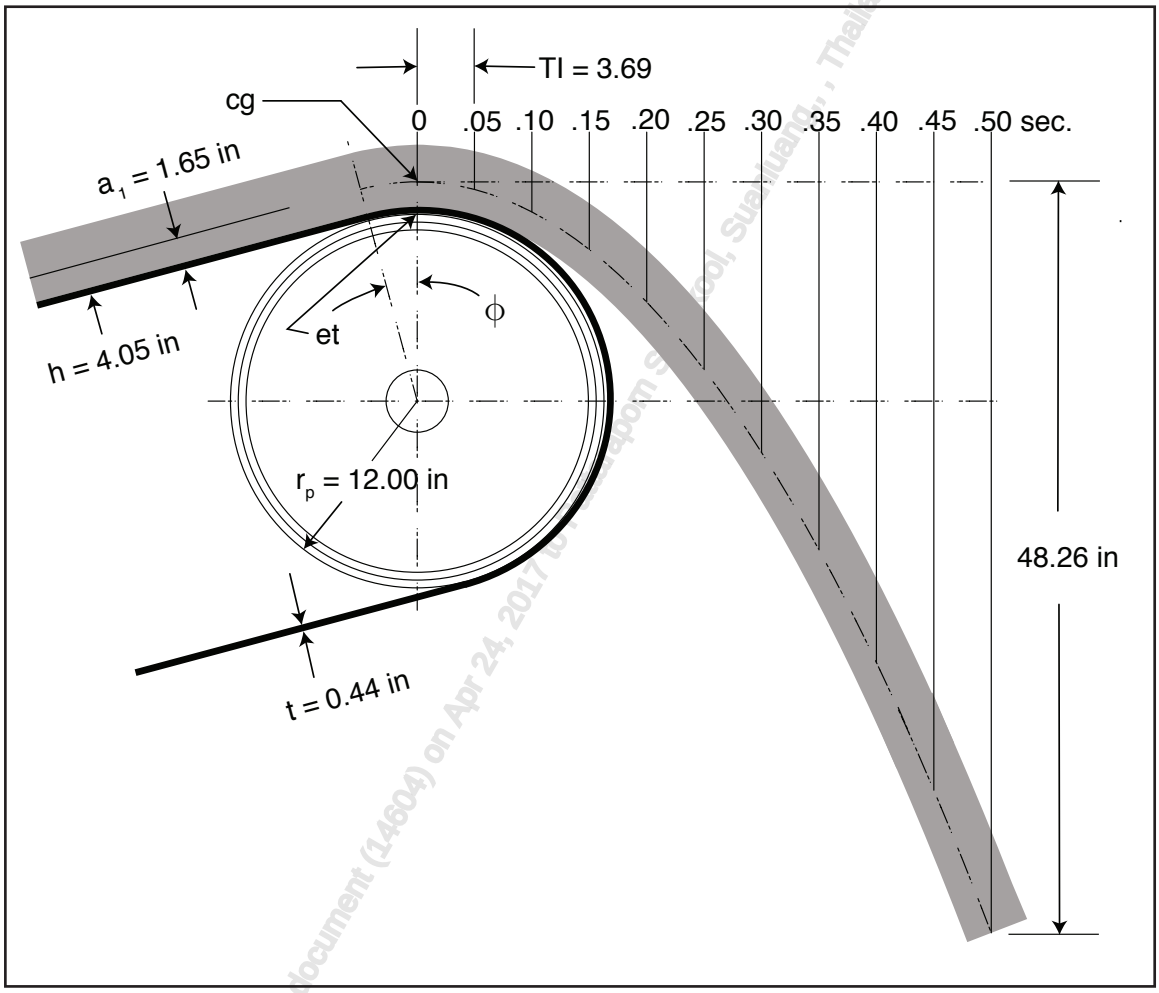

Figure 12.118
Trajectory case 4 example

WWW.CEMANET.ORG has issued this document (14604) on Apr 24, 2017 to [illegible] Suankularb , , Thailand

Example Case 5 Inclined Conveyor

Where:

$$\frac{V^2}{r_s \times g} = 0.578 \text{ not } \geq 1.0 \qquad \frac{V_s^2}{r_s \times g} = 0.738 < 1.0 \therefore \text{ use } V_s = V_s$$

Given:

Three equal roll 20° standard troughing idlers
ϕ = 15°
BW = 30 in (762 mm)
t = 0.44 in (11.11 mm)
V = 280 fpm (1.4 m/s)
r_p = 12.00 in (304.8 mm)
ϕ_s = 20° (surcharge angle)
h = 4.05 in (102.9 mm) From Table 12.88
a_t = 1.65 in (41.9 mm) From Table 12.88

Calculate tangential velocity at the center of gravity

$$r_s = \frac{12.0 + .44 + 1.65}{12} = 1.17 \text{ ft}$$

$$\text{Pulley rpm} = \frac{V}{2 \times \pi \times \left(\frac{r_p + t}{12}\right)} = \frac{280}{6.51} = 43.01 \text{ rpm}$$

$$V_s = \frac{2 \times \pi \times r_s \times \text{Pulley rpm}}{60 \text{ (s/min)}} = 5.27 \text{ fps}$$

Determine if point e_t is at the tangent point:

$$\frac{V_s^2}{r_s \times g} = \frac{(5.27)^2}{32.17 \times 1.17} = 0.738$$

Since $\frac{V_s^2}{g \times r_s} < 1.0$ point e_t is at the angle $\Upsilon = \cos^{-1}(0.738) = 42.43°$, use center of gravity tangential speed, V_s, for plotting.

Time interval, TI, for plotting the trajectory in increments of 0.05 seconds is:

TI = 0.05 (s) × 5.27 (fps) = 0.264 ft = 3.17 in

WWW.CEMANET.ORG has issued this document (2160-4) on Apr 24, 2017 (Pitsanuloke Chitrakool, Chanuanglung, , , Thailand

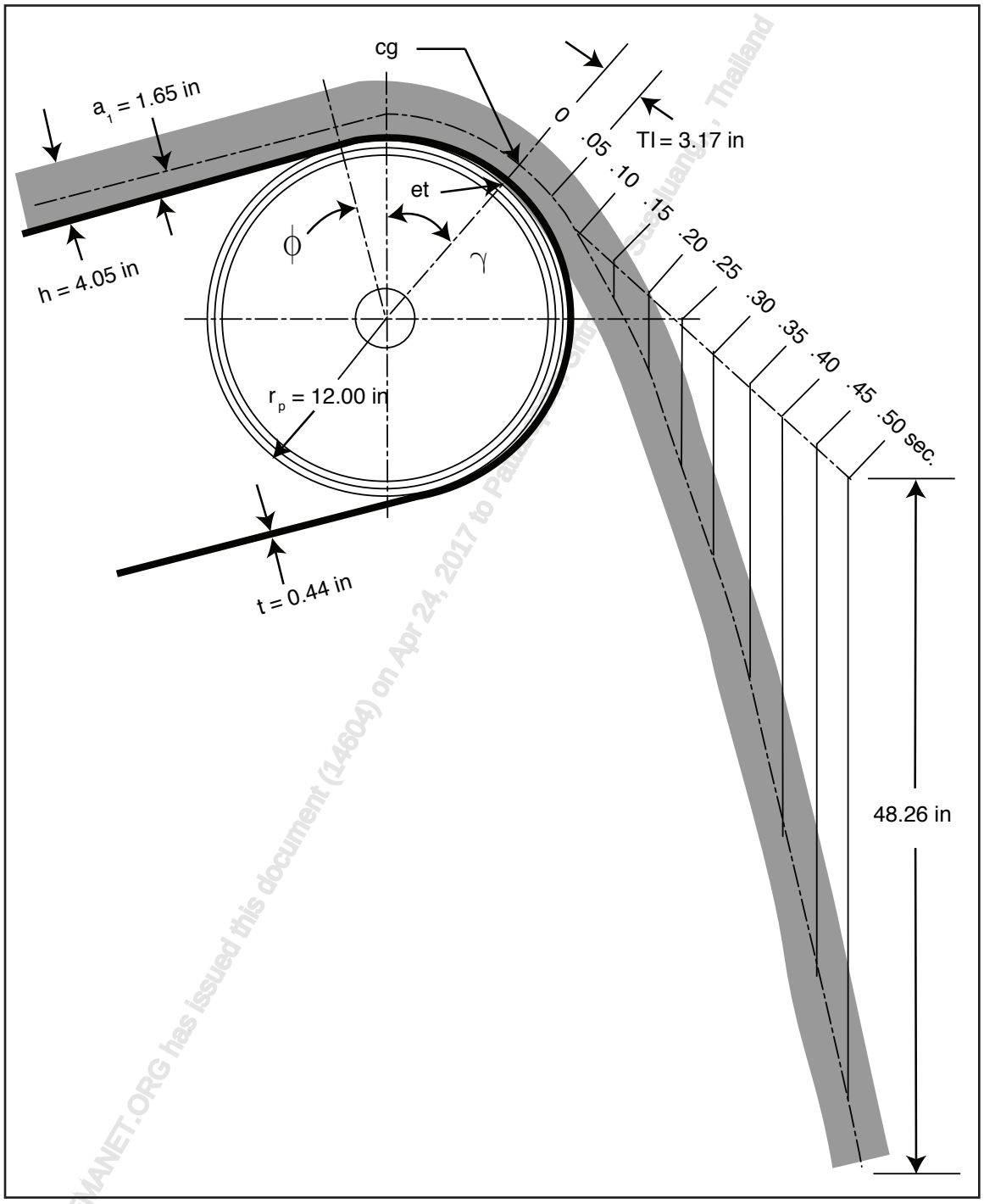

Figure 12.119
Trajectory case 5 example

www.CEMANET.ORG has issued this document (14604) on Apr 24, 2017 to Pa... Chulalongkorn University, Thailand

Example Case 6 Declined Conveyor

Where:

$$\frac{V^2}{r_s \times g} = 1.18 \geq 1.0 \therefore \text{ use } V_s = V$$

Given:

Three equal roll 20° standard troughing idlers
ϕ = -15°
BW = 30 in (762 mm)
t = 0.44 in (11.11 mm)
V = 400 fpm (2.03 m/s)
r_p = 12.00 in (304.8 mm)
ϕ_s = 20° (surcharge angle)
h = 4.05 in (102.9 mm) From Table 12.88
a_t = 1.65 in (41.9 mm) From Table 12.88

Calculate tangential velocity at the center of gravity

$$r_s = \frac{12.0 + .44 + 1.65}{12} = 1.17 \text{ ft}$$

$$\text{Pulley rpm} = \frac{V}{2 \times \pi \times \left(\frac{r_p + t}{12}\right)} = \frac{280}{6.51} = 64.42 \text{ rpm}$$

$$V_s = \frac{2 \times \pi \times r_s \times \text{Pulley rpm}}{60 \text{ (s/min)}} = 5.27 \text{ fps}$$

Determine if point e_t is at the tangent point:

$$\frac{V_s^2}{r_s \times g} = \frac{(7.52)^2}{32.17 \times 1.17} = 1.50$$

Since $\frac{V^2}{g \times r_s} > 1.0$ point e_t is at tangent point between the belt and pulley, use belt speed, V, for plotting.

Time interval, TI, for plotting the trajectory in increments of 0.05 seconds is:

$$TI = 0.05 \text{ (s)} \times \frac{400 \text{ (fpm)}}{60 \text{(s/min)}} = 0.333 \text{ ft} = 4.0 \text{ in}$$

www.CEMANET.ORG has issued this document (3160-4) on Apr 24, 2017 (Pitanupong Sitrakool, Sanluang, , Thailand

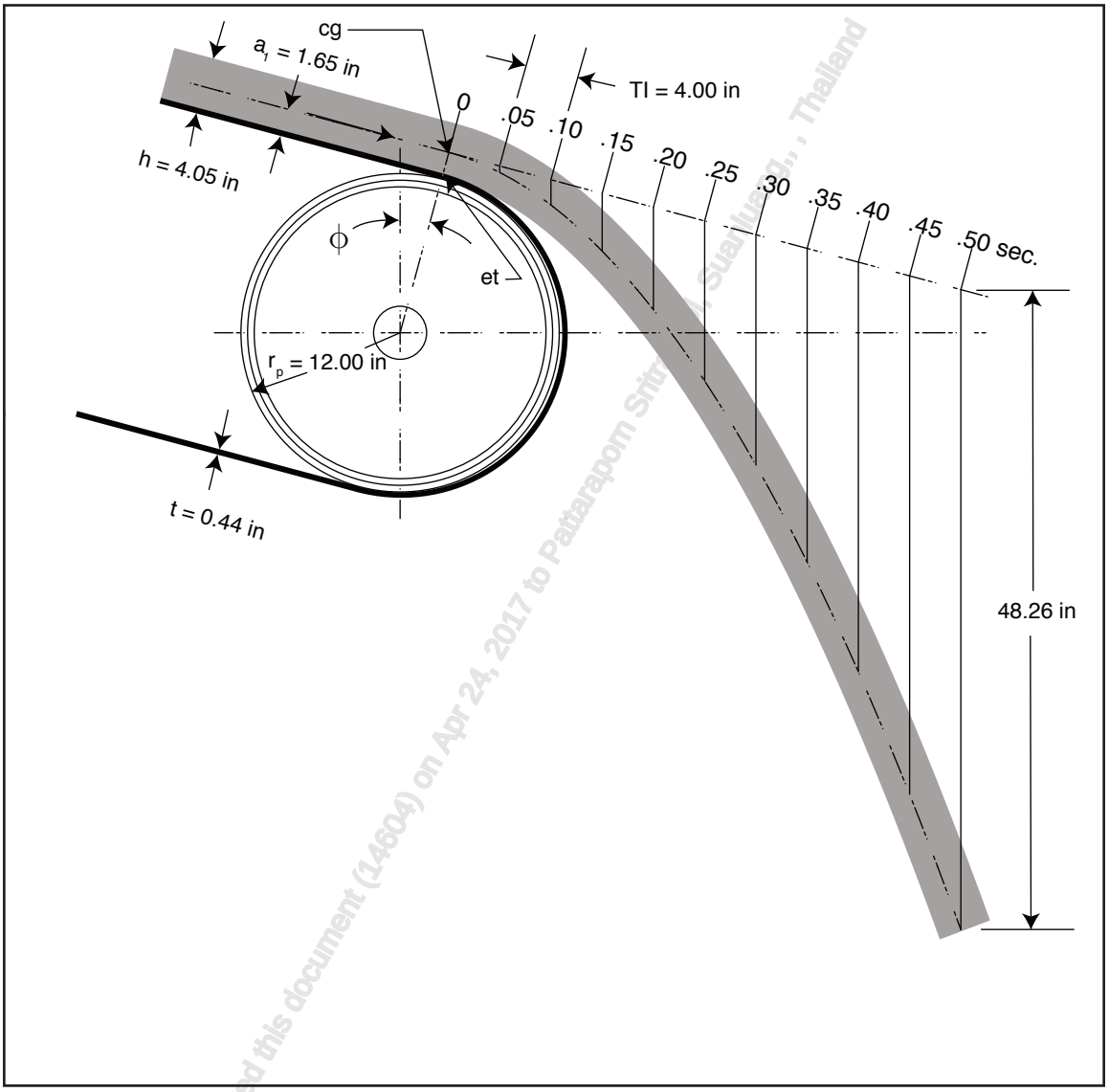

Figure 12.120
Trajectory case 6 example

WWW.CEMANET.ORG has issued this document (14604) on Apr 24, 2017 to Pattarapom Sritong, Suaiueng., , Thailand

Example Case 7 Declined Conveyor

Where:

$$\frac{V^2}{r_s \times g} = 0.579 \text{ not } \geq 1.0 \quad \frac{V_s^2}{r_s \times g} = 0.738 \text{ is} < 1.0 \quad \therefore \text{ use } V_s = V_s$$

Given:

Three equal roll 20° standard troughing idlers
ϕ = -15°
BW = 30 in (762 mm)
t = 0.44 in (11.11 mm)
V = 280 fpm (1.42 m/s)
r_p = 12.00 in (304.8 mm)
ϕ_s = 20° (surcharge angle)
h = 4.05 in (102.9 mm) From Table 12.88
a_t = 1.65 in (41.9 mm) From Table 12.88

Calculate tangential velocity at the center of gravity

$$r_s = \frac{12.0 + .44 + 1.65}{12} = 1.17 \text{ ft}$$

$$\text{Pulley rpm} = \frac{V}{2 \times \pi \times \left(\frac{r_p + t}{12}\right)} = \frac{280}{6.51} = 64.42 \text{ rpm}$$

$$V_s = \frac{2 \times \pi \times r_s \times \text{Pulley rpm}}{60 \text{ (s/min)}} = 5.27 \text{ fps}$$

Determine if point e_t is at the tangent point:

$$\frac{V_s^2}{r_s \times g} = \frac{(5.27)^2}{32.17 \times 1.17} = 0.738$$

Since $\frac{V_s^2}{g \times r_s} < 1.0$ point e_t is at the angle $\Upsilon = \cos^{-1}(0.738) = 42.43°$, use center of gravity tangential speed, V_s, for plotting.

Time interval, TI, for plotting the trajectory in increments of 0.05 seconds is:

TI = 0.05 (s) × 5.27 (fps) = 0.264 ft = 3.17 in

WWW.CEMANET.ORG has issued this document (14614) on Apr 24, 2017 to [illegible] Chirakoon Suanluang, , , Thailand

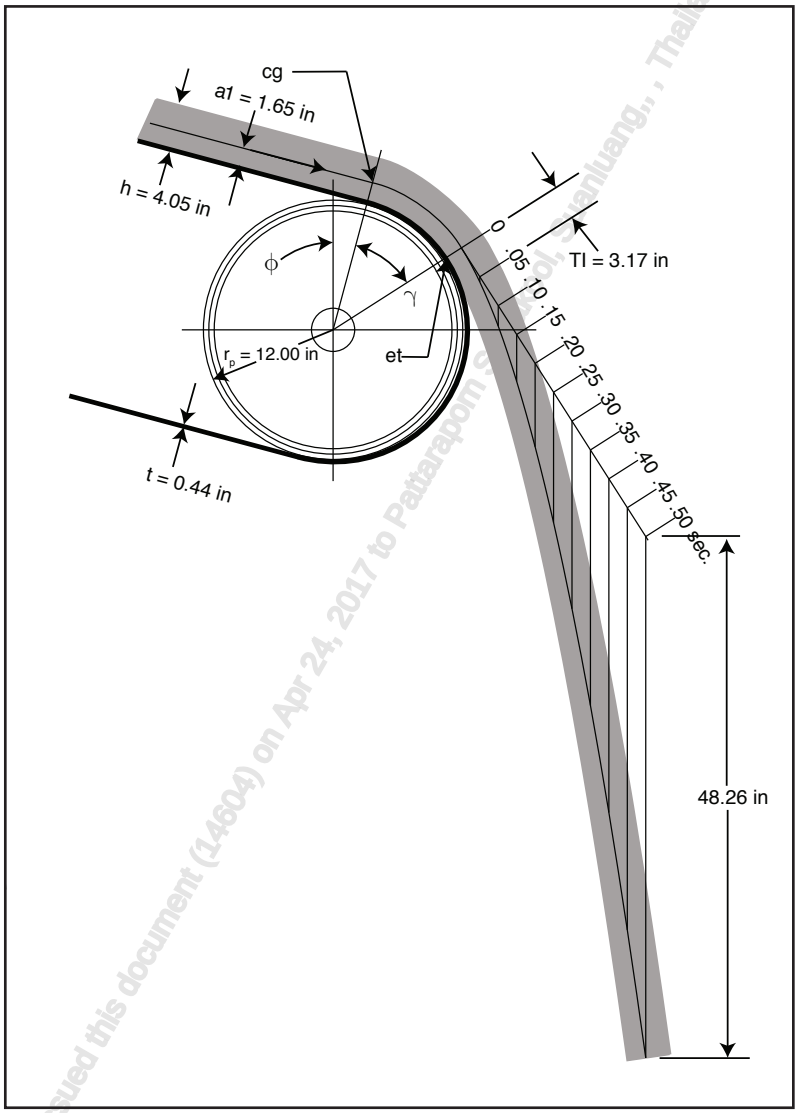

Figure 12.121
Trajectory case 7 example

WWW.CEMANET.ORG has issued this document (14604) on Apr 24, 2017 to Pattarapom Sirikul, Bangkok, Thailand

Introduction Pg 580
Conveyor Drive Evaluation Criteria Pg 580
- Belt Drive System
- Electric Motor Attributes
- Type
- Temperature
- Enclosures
- Speed
- Voltage
- Bearings
- Service Factor
- Efficiency
- Torque Type
- Motor Protection
- Winding Temperature
- Bearing Temperature
- Vibration
- Motor Space Heater
- Motor Tachometer

Belt Drive Attributes Pg 585
- Size
- Torque Control
- Thermal Rating
- Variable Speed
- Regeneration or Overhauling Load
- Maintenance and Supporting System
- Cost
- Complexity
- Multiple Drives
- Conveyor Jam
- Belt Control System

Conveyor Drive Systems Overview Pg 588
- AC Induction Motor with Direct Coupling
- AC Induction Motor with Reduced Voltage Starting and Direct Coupling
- Wound Rotor AC Motor and Direct Coupling Drive
- DC Motor and Direct Coupling
- AC Induction Motor with Variable Frequency Control and Direct Coupling

WWW.CEMANET.ORG has issued document #MAT1460 on Apr 24, 2017 to Pattarapom Sritrakool, Suanluang, , , Thailand

Motorized Conveyor Pulleys
AC Induction Motor with Full Voltage Starting and Fixed Fill Fluid Coupling
AC Induction Motor with Full Voltage Starting and Variable Fill Fluid Coupling
AC Induction Motor and Mechanical Transmission with Integral Hydroviscous Coupling
Other Conveyor Drives
Speed Reducers Pg 606
Configuration
Capacity
Lubrication
Bearings
Belt Conveyor Drive Arrangements Pg 608
Speed-Reduction Mechanisms
Alignment Free Drives
Drive Efficiencies
Mechanical Variable Speed Devices
Creeper Drives
Backstops Pg 613
Definition
Sprag Design
Single Ramp and Multiple Roller Design
Individually Spring-Loaded Roller and Ramp Design
Roller Cage and Ramp Design
Pawl and Ratchet Designs
Determining the Need and Capacity of Backstop, Inclined Conveyors
Brakes Pg 617
Mechanical Friction Brakes
Eddy-Current Brakes
Plugging the Motor
Dynamic Braking
Regenerative Braking
Brakes and Backstops in Combination Pg 618
Restraint of Declined Conveyors
Brake and Backstop Recommendations

www.CEMANET.org has a site license for Kittarapom Sritrakool, Suanlung, , Thailand (14604) on Apr 24, 2017

Devices for Acceleration, Deceleration, and Torque Control Pg 619
Starting the Conveyor
Controlled Acceleration
Wound-Rotor with Step Starting
Squirrel-Cage Induction Motor with Auto Transformer
Eddy-Current Couplings
Fluid Couplings
Variable-Speed Hydraulic Couplings
Dry Fluid Couplings
Miscellaneous Fluid Couplings
Centrifugal Clutch Couplings
Flywheel
Mechanical Clutches
Brake Heat Absorption Capacity Pg 622
Conveyor Belt Controls Pg 623
Drive Type Controller
Starting and Stopping Control Algorithms
Belt Protection Controls Pg 624
Belt Alignment
Belt Overload
Belt Slip
Takeup Over-travel
Transfer Chute Plug
Bin Level
Pullcord Stations
Rip Detectors
Fire Detection
Dust Sprays
Belt Control
Stop/Start
Start Warning
Interlock
Telemetry
Lockout
Belt Control Apparatus Pg 628
Computer Based Control
Human-Machine Interface
Conclusion Pg 629

WWW.CEMANET.ORG has issued this document 1460 on Apr 22, 2017 to Supaporn Prakoon, Suanluang, Thailand

INTRODUCTION

Belt conveyors are an important system for transporting bulk materials in industry. The control of the application of the starting torque from the belt drive system to the belt affects the performance, life cost, belt selection and reliability of the conveyor. The force required to move a belt conveyor must be transmitted by the drive pulley via friction between the drive pulley and the belt. To transmit power there must be a difference in the belt tensions as the belt approaches and leaves the drive pulley. These conditions are true for steady state running, starting, and stopping.

The belt designer must control starting acceleration to prevent excessive tension in the belt and forces in the belt drive system. High acceleration forces can adversely affect the belt tension elements, belt splices, drive pulleys, idlers, shafts, bearings, speed reducers, and couplings. Uncontrolled acceleration forces can cause belt conveyor system performance problems with vertical curves, excessive belt takeup movement, loss of drive pulley friction, spillage of materials, and festooning of the belt. The belt drive system must produce an accelerating torque powerful enough to start the conveyor and controlled in such a manner that the acceleration forces are within safe limits. Smooth starting of the conveyor can be accomplished with drive starting torque control equipment, either mechanical or electrical, or a combination of the two. In some cases, it is also desirable to control the running and stopping forces of the conveyor belt system.

CONVEYOR DRIVE EVALUATION CRITERIA

What is the best belt conveyor drive system? This is a common question for the belt designer. The answer depends on many variables. The best system is one that provides acceptable control for starting, running, and stopping at a reasonable cost and with high reliability.

Belt Drive System

For the purposes of this discussion, we will assume that belt conveyors are almost always driven by electrical prime movers. The belt "drive system" consists of multiple components including the electrical prime mover, the electrical motor starter/controller with control/regulator system, the motor coupling, the speed reducer, the low speed coupling, the belt drive pulley, the pulley brake or hold back, and the belt control system. It is important that the belt designer examine the applicability of each system component to the particular application.

Electric Motor Attributes

A conveyor system designer must specify an electrical prime mover with attributes consistent with the conveyor application. The motor attributes include electrical and mechanical specifications.

Type

The National Electrical Manufacturers Association (NEMA) defines various types of electrical motors. For conveyors, alternating current (AC) squirrel cage induction or wound rotor induction motors (WRIM), are most common. Direct current (DC) shunt or compound wound rotating enclosed machines are seldom used anymore. The motor nameplate defines the motor type and rating constants.

WWW.CEMANET.ORG has issued this document (14604) on 02-27-17 to Hatteras Offshore. Single-user license only, copying and networking prohibited.

Temperature

Electric motors are rated for nameplate full load temperature rise above an ambient for altitudes below 3,300 feet (1000 m) above sea level based on classes of insulation. Unless stated otherwise, ambient is assumed to be 40°C (104 °F). Higher altitudes and ambient temperatures may require motor de-rating. Class A insulation materials are rated for 60°C (140 °F) temperature rise above ambient, Class B for 80° C (176 °F), Class F for 105°C (221 °F), and Class H for 125°C (257 °F).

These temperature limits are average, and based on a 5°C (41 °F) to 15°C (59 °F) hot spot rise above this average. NEMA standards recommend that large motors above 1,500 horsepower (1,120 kW) include internal stator temperature detectors. Running motors above rated insulation temperature does not cause immediate failure, but reduces insulation life and the ability of insulation to withstand moisture. It is generally assumed that for a motor steady state load running 10°C (50 °F) above the insulation rating, the motor insulation life is reduced by half. Vacuum pressure impregnated (VPI) insulation systems use epoxy fills to seal motor windings and insulation from moisture penetration. Although, VPI insulations can degrade the heat convection rate from the windings to the ambient, this is normally considered as a part of the motor design.

Enclosures

Electric motors are available in various enclosures. NEMA publishes common descriptive terms for enclosure types. Different motor suppliers often offer variations or adaptations on motor enclosure types. Motor enclosure types are commonly referenced for AC induction motors. Wound rotor and DC motors may be available in more restrictive enclosure designations. Most motor enclosure types are designed for cooling by ambient air. Some motors enclosures are available for liquid or gas cooling.

Open motors are uncommon on conveyors. Open drip proof (ODP) motors provide environmental protection from falling water and particles approaching the motor within 15° of vertical while allowing ambient air to ventilate the motor electrical windings. Adaptations of ODP motors are weather protected (WPI or WPII), splash proof, fully guarded, and separately force ventilated designs that add tortuous ventilation paths via baffles, insect screens, moisture resistant form wound sealed insulation, and/or dust filters. ODP motors offer economy and optimum heat dissipation. Totally enclosed fan cooled (TEFC) designs offer a sealed motor enclosure with no free exchange of ambient air between the inside and outside of the motor enclosure. Heat is dissipated through the air over the motor enclosure by integral motor fans, air to air heat exchangers, forced air cooling by separate blowers, water jackets, or gas filled enclosures. Adaptations of TEFC are totally enclosed non-ventilated (TENV), totally enclosed water-to-air cooled (TEWAC), totally enclosed air-to-air cooled (TEAAC), and totally enclosed air over (TEAO). Since TEFC designs involve a heat exchanger, motor frames are typically larger than ODP designs for the same power. TEFC motors are commonly used with conveyors that must function in adverse environments.

Hazardous rated enclosures are used in conveyor applications in National Electrical Code Article 500 Hazardous Areas. NEC defines hazardous areas by class and division according to the type and occurrence of hazard. Class I hazards refer to combustible gases. Class II hazards refer to combustible dusts. Class III hazards refer to combustible fibers. Explosion proof or permissible enclosures are used in underground mining environments subject to regulation by federal and state mining regulations. International Electrical Commission (IEC) enclosure designations specify motor enclosures for worldwide applications. An explosion-proof machine is designed to contain an internal ignition of a specified gas, vapor, or dust and prevent the propagation of the explosion outside the enclosure. An explosion proof motor will also limit external temperatures of the enclosure to prevent ignitions.

www.CEMAnet.org Issued to: Patterson Conveyors (1404) on 04-24-2017 to Patterson Conveyors, St. Louis, Missouri

Speed

The AC induction motor utilizes current applied to stator windings arranged in pole groups which induces power into the rotor windings. The rotor windings are arranged in pole groups and shorted at the end by conducting end rings. When the stator is supplied by a three-phase source, it produces a magnetic field that rotates at synchronous speed as determined by the number of poles and the applied frequency. For a 60 Hz source, the common synchronous speeds available for motors are 3,600 rpm for two poles, 1,800 rpm for 4 poles, 1,200 rpm for 6 poles, 900 rpm for 8 poles, and so on. For belts, the 1,800 rpm and 1,200 rpm speeds are most common. (50 Hz: 1,500, 1,000 and 750 rpm)

The rotor then rotates at the synchronous rpm for no load and slows to the full load rpm at full load torque. The lagging in speed below the rotating magnetic field produces a speed differential called slip. The torque is then proportional to this slip for points around the rated load. DC shunt motors are available in standard speeds similar to AC motors. AC synchronous speeds correspond with standard DC speeds of 3,500, 1,750, 1,150, and 850 rpm. At increasing power, wound armature designs limit DC motor speeds. For example, depending on the manufacturer, at above 800 horsepower (597 kW), 1,750 rpm motors may not be available. The base speed of DC motors is controlled by the shunt field current. The base speed can be lowered by increasing the field current and raised by decreasing the field current, within limits. The motor base speed is reached at full armature voltage. Power remains the product of torque and speed. For a given power, a higher speed motor typically operates at lower torque in a smaller frame.

Voltage

For three-phase AC motors, mechanical power is the product of four variables: voltage, current, power factor, and efficiency. For DC shunt motors, power is the product of voltage, current, and efficiency. For a required power, a higher motor voltage results in a lower motor current. In the United States, NEMA defines common utilization voltages for motors. Common conveyor AC motor application voltages are 230, 460, 575, 950, 2,300, 4,160, and 6,600 VAC. Common DC motor application voltages are 250, 500, 600, 700, and 750 VDC.

Bearings

Conveyor rotating motors are available in ball, roller, and sleeve bearings. Bearing lubrication is by grease, oil film, or oil bath. For horizontal motors, the most common bearings are standard deep groove ball bearings with grease lubrication. For severe environments, single or double shielded bearings protect the lubrication grease from contamination. For additional protection against contamination, bearing isolators, bearing caps, or labyrinth paths are often used. Belt, chain drives, and overhung coupling loads exert additional radial forces on motor bearings and these applications tend to use roller bearings. Sleeve bearings constructed of tin-based babbitted liners bonded to bronze or cast iron shells with oil film lubrication are more common on very large motors. The choice and availability of bearing and lubrication types depend on speed, size, and local practices.

Service Factor

In AC motors, service factors (SF) of 1.0 and 1.15 are commonly available. A 1.15 SF motor provides the same torque versus speed characteristics of a 1.0 SF motor, but allows for a 15 percent thermal overload capability regarding insulation and winding temperature. On belt conveyors, designers often choose a 1.15 SF motor with the power chosen for standard CEMA belt loading and the 15 percent overload capability for periodic surge loading. In DC motors, the standard SF is 1.0.

Web CEMA Order Number: 1 (Apr 30 2017 @ Pulverizer Engineering Suanluang Thailand)

Efficiency

Depending on the motor HP and the type of motor, there may be several motors with different efficiencies available for your application. It is important to do a payback study including the purchase cost and the operating costs. In most cases the higher efficiency motor will quickly pay for itself.

Electric motor efficiency is a measure of the ability to convert electrical input power to mechanical output power. Nameplate efficiency is listed as a percentage based on motor full load. Motors are available in standard, high, and premium efficiency models. Motor efficiency normally increases with larger motors and decreases with partial motor load. Motor efficiency is increased by using more conductor material such as copper in the stator, thinner laminations of better magnetic steel in the poles and core, increasing the copper conductor content of the rotor, lowering friction bearings, using more efficient cooling fans or using larger frames to reduce operating temperature and reducing magnetic excitation levels to decrease core losses.

In 2007 the U.S. passed the Energy Independence and Security Act, known as EISA, that raised the efficiencies on all EPAct motors to require them to meet NEMA Premium motor efficiencies. EISA also brought into regulatory control some motors that had previously been exempted so they now must meet minimum EPAct efficiencies. For each general-purpose rating from 1 to 200 horsepower that was previously covered by EPAct, the law specifies a nominal full-load efficiency level based on NEMA Premium® efficiency as shown in NEMA MG 1, Table 12-12. All 230 or 460 volt (and 575 volts for Canada) motors currently under EPAct, manufactured after December 19, 2010, must meet or exceed this efficiency level.

General Purpose Electric Motors not previously covered by EPAct are required to comply with Energy Efficient efficiencies as defined by NEMA MG 1, Table 12-11. Motors that are 201 – 500 horsepower not previously covered by EPAct will be required to comply with Energy Efficient efficiencies as defined by NEMA MG 1, Table 12-11.

Torque Type

NEMA classifies low voltage AC induction motors through 200 horsepower (150 kW) into several classes with respect to locked rotor, pull-up, breakdown torques, and running slip (see Figure 13.1). In general, NEMA Design A motors have low to moderate locked rotor torque, low pull-up torque, high breakdown torque, high starting currents, and small running slip. NEMA Design B motors have moderate locked rotor torque, moderate pull-up torque, medium to high breakdown torque, moderate starting current, and moderate running slip. NEMA Design C motors have moderate to high locked rotor torque, high pull-up torque, medium breakdown torque, medium to low starting current, and medium running slip. NEMA Design D motors have high locked rotor torque, high pull-up torque, moderate to low breakdown torque, low starting current, and high running slip. NEMA Design B and Design C motors are most commonly applied to belt conveyors. NEMA Design C motors are usually chosen for direct coupled loads, the high pull up torque giving more available torque for acceleration of the load through starting.

www.CEMAFORG Issued File Document (1440) on Apr 24, 2017 0 Pages from Smarco Stallone, Yasin

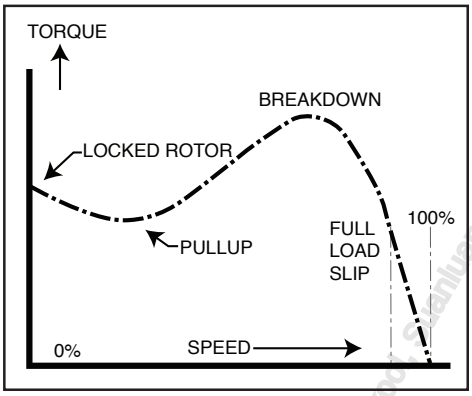

Figure 13.1
Typical AC motor torque vs. speed curve

Downloaded from Digital Engineering Library by McGraw-Hill (c) 2017 to Pongsakorn Sitrakoon, Chanburi, , , Thailand

Motor Protection

Motors may be provided with the following optional protection features. The Devices selection of these features depends on motor size, cost, and usage levels.

Winding Temperature

The motor is protected from thermal overload by an overload meeting NEC requirements and the motor ventilation system. The motor overload model may not match the installed motor characteristics or environment. The motor ventilation system is dependent on sufficient air volume and surface conditions. To augment motor protection, the user should consider motor winding temperature protection. Classically, this has involved the insertion of winding thermostats or "Klixons" into the stationary windings that operate at a preset temperature. They can trigger an alarm or shutdown. Alternatively, motor measurements of temperature can be measured by resistance temperature devices (RTDs), thermocouples, or thermistors. In conveyor environments, heavy duty 100 ohm platinum RTDs are the most common choice for temperature measurement. A 100 ohm platinum sensor measures 100 ohms at 0°C, and rises 0.00385 ohms per degree (European DIN standard, 0.003916 ohms American Standard). This resistance is monitored by a RTD transducer in the belt control system. The motor may be alarmed at high temperature and shut down at the high temperature limit. The motor temperature may limit belt loading. RTD sensor wiring should be brought outside the motor enclosure in a junction box separate from the power conductors.

Bearing Temperature

The temperature of the bearing can reflect on the health of the lubrication system and the loading of the bearing. By embedding an RTD sensor within the bearing housing, the belt control system can monitor the bearing temperature. The absolute bearing temperature is affected by the motor ambient. A good strategy is to subtract the ambient temperature from the absolute to monitor the rise above ambient. A change in this level suggests a bearing problem. Again, 100 ohm platinum RTDs are the best choice. In bearings, some thought needs to be given to the RTD sensor choice. One strategy is to use spring-loaded, tip-sensitive RTDs inserted at 90 degrees to the shaft that contacts the outer race of the bearing. Another is to use an averaging sensor that measures the average from the tip contact with the bearing through the grease region to the motor bearing frame. RTDs can also be mounted in stainless steel wells that isolate the sensor from the grease environment, and allow for insertion and removal when running. In any event, it is preferable to have the manufacturer of the motor mount the RTD in the bearing housing, as opposed to field mounting.

Vibration

The vibration level of the motor is an indicator of the bearing status, motor alignment to load, or system vibrations conveyed to the motor by structure. System vibrations can be generated by large pieces of conveyed material traveling through discharge chutes at belt transfers. Vibration, by itself, is difficult to interpret. Vibration sensors can measure displacement, velocity, or acceleration. Vibration analyzers determine the vibration at each frequency. Most motor vibration sensors are commonly broadband frequency devices that add all vibration frequencies with equal weight and no filtering. This can result in different absolute vibrations for different motors in different locations. Again, the belt control system is configured to monitor the change in level of the vibration. Vibration control often generates alarms, but does not shut down the motor on belt conveyors. A vibration alarm is normally followed up by a visual inspection, and/or a vibration survey with an analyzer instrument.

Motor Space Heater

In motors mounted outdoors or subjected to condensing environments, there is concern for the accumulation of water within the motor windings and enclosures. This would normally occur when the motor was not running and had cooled through the temperature of condensation. Motors can be specified with auxiliary enclosure heaters normally powered from the belt control system at 120 VAC (240 VAC). The heater is configured to be on only after the motor is idled for some time and the motor temperature passes below a set point. The heater should not be allowed to run when the motor is idled and the motor is already hot, as the heater will impede cooling for the next operation duty cycle. The cost of the motor heater and its associated control must be balanced with the user's proposed environment.

Motor Tachometer

Some conveyor applications require a measurement of the prime mover speed. A motor driven tachometer provides a linear signal proportional to speed. Motors can be supplied with mounting provisions for tachometers. Analog tachometers are traditional DC generators with brushes and permanent magnet fields. Analog tachometers generate a DC voltage proportional to speed at some linear rate, such as 50 volts per 1,000 rpm. Digital tachometers are often non-contact designs with optical or inductive coupling that generate pulses per revolution. A digital tachometer usually requires a companion digital to analog converter board. In the design of the D/A board, a trade-off occurs between the minimum pulse rate and the signal update time. Thus a digital tachometer cannot measure to zero speed. The user should obtain a tachometer of an accuracy and robustness suitable to the application.

BELT DRIVE ATTRIBUTES

What are the requirements of a belt conveyor system? The belt designer must catalog the belt conveyor requirements in order to select and match the drive system features.

Size

Certain drive components are available and practical in different size ranges. For this discussion, we will assume that belt drive systems range from fractional horsepower to multiples of thousands of horsepower. Small drive systems are often below 50 horsepower (<37 kW). Medium systems range from 50 to 1,000 horsepower (37 to 750 kW). Large systems can be considered above 1,000 horsepower (>750 kW). Division of sizes into these groups is entirely arbitrary. One should resist the temptation to over-motor or under-motor a conveyor to enhance standardization. An over-motored drive results in poor efficiency and the potential for high torques, while an under-motored drive could result in destructive over-speeding on regeneration, the failure to start a load, or overheating on loading with shortened motor life.

www.BEARINGNET.ORG is issued to [illegible] on Apr 27, 2016 Printed from Structural Solutions Hand

Torque Control

Belt designers try to limit the starting torque to no more than 140 percent of the running torque. The limit on the applied starting torque is often the limit of rating of the belt carcass, belt splice, pulley design, or shaft deflections. On larger belts and belts with optimized sized components, torque limits of 110 percent through 125 percent are common. Besides a torque limit, the belt starter may be required to limit torque increments that would stretch belting and initiate traveling waves. An ideal starting control system would first apply a pretension torque to the belt at rest, up to the point of breakaway, or movement of the entire belt; and then a torque equal to the movement requirements of the belt with load, plus a constant torque to accelerate the inertia of the system components from rest to final running speed. This would minimize system transient forces and belt stretch. Different drive systems exhibit varying ability to control the application of torques to the belt at rest and at different speeds. Also, the conveyor itself exhibits two extremes of loading. An empty belt normally presents the smallest required torque for breakaway and acceleration, while a fully loaded belt presents the highest required torque. A conveyor drive system must be able to scale the applied torque from a 2:1 ratio for a horizontal simple belt arrangement, to a 10:1 range for an inclined or complex belt profile. Classically, stopping the conveyor involves the removal of motive driving force, while allowing the conveyor to drift to a stop. Some complex conveyor profiles or dynamic traveling tension waves in the belt require drive torque control during stopping. The belt drive torque is reduced at a controlled rate as the conveyor is driven to stop over a period longer than the normal drift time.

Thermal Rating

During starting, running, and stopping, each drive system dissipates varying quantities of waste heat. The waste heat may be dissipated in the electrical motor, the electrical controls, the couplings, the speed reducer, or the belt braking system. The thermal load of each start is dependent on the amount of belt load and the duration of the start. The designer must fulfill the application requirements for repeated starts after running the conveyor at full load. Typical conveyor belt starting duties vary from 3 to 10 starts per hour equally spaced, or 2 to 4 starts in succession. Repeated starting may require the de-rating or over-sizing of system components. There is a direct relationship between thermal rating for repeated starts and costs for each drive system.

Variable Speed

Some belt drive systems are suitable for controlling the starting torque and speed, but only run at constant speed. Some belt applications require a drive system that can run for extended periods at less than full speed. This is useful when the drive load must be shared with other drives, when the belt is used as a process feeder for rate control of the conveyed material, when the belt speed is optimized for the haulage rate and operating life, when the belt is used at slower speeds to transport supplies, or when the belt is run at slow inspection or inching speed for maintenance purposes. The variable speed belt drive will require a control system based on some algorithm to regulate operating speed.

Regeneration Or Overhauling Load

Some belt profiles present the potential for overhauling loads where the belt system supplies energy to the drive system (see Figure 13.2). Not all drive systems can accept regenerated energy from the load. Some drives can accept energy from the load and return it to the power line for use by other loads. Other drives accept energy from the load and dissipate it into designated dynamic or mechanical braking elements. Some belt profiles switch from motoring to regeneration during operation.

WWW.EMAP.COM has exclusive rights to this document (1-800-624-6724) Apr 24, 2017 © Purchaser may print, store, share with employees

Issues to address include: Can the drive system accept regenerated energy of a certain magnitude for the application? Does the drive system have to control or modulate the amount of retarding force during overhauling? Does the overhauling occur when running, starting, and/or stopping?

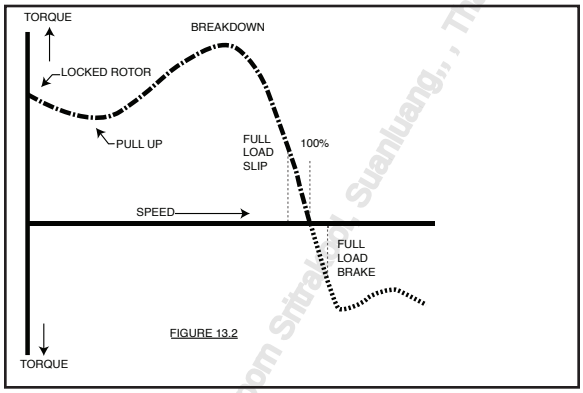

Figure 13.2
Induction Motor motoring and regeneration

Maintenance And Supporting System

Each drive system will require periodic preventative maintenance. Replaceable items include motor brushes, bearings, brake pads, dissipation resistors, oils, and cooling water. If the drive system is conservatively engineered and operated, the lower stress on consumables will result in lower maintenance costs. Some drives require supporting systems such as circulating oil for lubrication, cooling air or water, environmental dust filtering, or computer instrumentation. The maintenance of the supporting systems can affect the reliability of the drive system.

Cost

The drive designer will examine the cost of each drive system. The total cost is the sum of the first capital cost to acquire the drive, the cost to install and commission the drive, the cost to operate the drive, and the cost to maintain the drive. The cost of power to operate the drive may vary widely with different locations. The designer strives to meet all system performance requirements at lowest total cost. Often more than one drive system may satisfy all system performance criteria at competitive costs.

Complexity

The preferred drive arrangement is the simplest, such as a single motor driving through a single head pulley. However, mechanical, economic, and functional requirements often demand the use of complex drives. The belt designer must balance the need for sophistication against the problems that accompany complex systems. Complex systems require additional design engineering for successful deployment. An often overlooked cost in a complex system is the cost of training on site personnel, or the cost of downtime because of insufficient training.

Multiple Drives

A simple belt is often driven by one drive pulley. More complex belts are driven by multiple, independent pulleys. These pulleys may be near each other or at different belt locations. Multiple drives allow the belt designer to increase the driven power while maintaining or reducing belt tensions. Multiple drives require a drive starting and running system that allows for coordination between drives. Multiple drives of different sizes or different belt wrap angles may require a load proportion scheme (load sharing). Load

www.CEMAFE.org reserved by document (1460-4) 2015-10-14 Patarapom Sritrakool Suanluang, , Thailand

sharing requires one of the drives to operate at a controlled, dependent torque rating during starting, or also during running conditions. Of concern is the question: Will the multiple drive belt systems operate with one or more prime movers out of service? Multiple drives at different locations will require a distributed control system.

Conveyor Jam

It is possible for a running belt conveyor to encounter a mechanical jam of the belt. The drive system will continue to impart torque to the belt up to the slip of the belt on the drive pulley. Different drives vary in the application of breakdown torque to the stalled machine. It is important for the drive designer to examine the rotating inertia in the drive system. The prime mover motor rotor and all other rotating parts may contribute significant kinetic energy to the stalled belt. The drive response to the stall and the application of the torque limit may vary.

Belt Control System

Each drive system will require a base case permissive control system for starting and running supervision. Most belt drive systems today use some form of computer control. Computer control systems all depend on field sensors for measuring and reporting drive parameters. The belt drive designer must decide the minimum required number and location of the field devices for adequate control. The drive control system will require power switch gear and control switch gear with provisions for "lockout" for conveyor maintenance and service. Lockout applies to sources of electrical, hydraulic, pneumatic, and gravity energy. In addition the proper interlocking sequence is important so equipment is energized in the proper sequence on start up and not until all sensors and switches are indicating the proper position.

CONVEYOR DRIVE SYSTEMS OVERVIEW

The system approach will group the electrical prime mover with control, the starting mechanism, the high and low speed couplings, the speed reducer, and the drive pulley for examination. The belt conveyor will require a force to initiate movement, termed "breakaway torque." In movement, the conveyor will require torque to support both existing motion and to support acceleration to running speed within the time and thermal limits imposed by the system. The resultant acceleration is proportional to the applied force divided by the mass in the system according to Newton's second law, where the mass is the system equivalent weight, or external inertia, divided by the force of gravity. More commonly, the belt designer will calculate the WK^2, or the weight of the system times the square of the radius of gyration. It is important that the designer add the drive system external inertia to the belt system inertia to view total system inertia. System inertias are modeled at the rotating speed of the electrical prime mover, or at the linear speed of the belt. All system external inertias must be referred to a common per unit base speed by a function of the square of the speed ratios.

AC Induction Motor with Direct Coupling

The most common electric motor for driving belt conveyors is the alternating current squirrel cage induction motor. The relationship of the motor torque to motor speed is nearly linear between the no load and full load operating points. Since full load slip is often less than 1-2 percent, the AC induction motor when running can often be considered a constant speed device. However, during starting we must examine other motor characteristics. In this area of motor operation, the AC induction motor torque is highly non-linear, as shown in Figure 13.1.

www.EEBOOT.ORG Saowaluck Sirirattanapong (6610...) on Apr 4 2017 To Patarapom Sritrakul Songkhla, , Thailand



Figure 13.3
AC induction motor with direct coupling

At the point of full voltage application of current to the stator with the rotor at standstill, the motor is modeled at "locked rotor torque." "Pull-up torque" is the minimum torque developed by the motor when the rotor is moving and accelerating the load toward the synchronous speed. The maximum torque attained during acceleration is termed "breakdown torque." The motor torque at any speed varies with the stator resistance and inductance, the rotor resistance and inductance referred to the stator as a function of slip, and the applied voltage squared.

$$\text{Time}_{accel} = \frac{WK^2 \times rpm}{CF \times T_{accel}} \quad (s)$$

Equation 13.4
Time_{accel}, Motor acceleration time

Where:

T_{accel} = Prime mover torque required torque load [ft-lbf (m-kgf)]
rpm = Motor shaft revolutions per minute
WK^2 = Moment of inertia of motor rotating parts [$lbf\text{-}ft^2$ ($kgf\text{-}m^2$)]
CF = Conversion constant: Imperial units = $308 \frac{ft\text{-}s}{min}$, metric units = $9.57 \frac{m-s}{min}$

Although AC induction motors represent the simplest and most economical means of driving belt conveyors, the standard NEMA motor types do not have ideal characteristics for starting control of the conveyor. AC induction motors are available from fractional horsepower through thousands of horsepower (kW). The direct-coupled, full-voltage starting application is usually limited to small conveyors at moderate speeds and profiles due to the impact of the locked rotor, pull-up, and breakdown torque to the conveyor system during starting. This system offers no controlled torque application.

www.CEMNET.ORG has issued this document (146044) on Apr 26 2012 to Prabaraporn Sritha

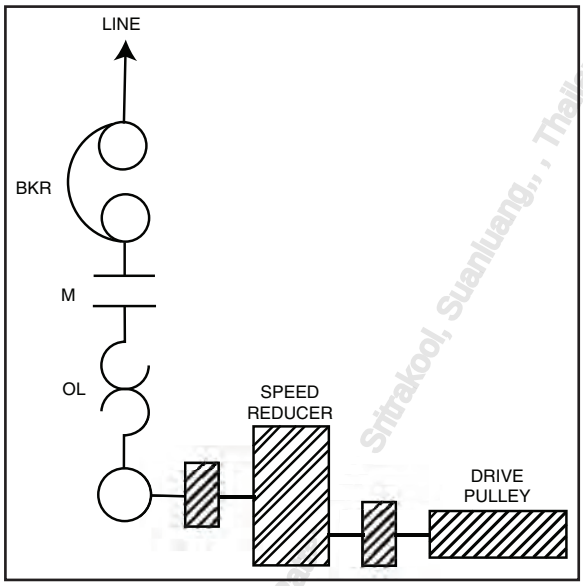

Figure 13.5
AC motor with full voltage starting and direct coupling

The thermal rating of the starting system is equal to the rating of the motor. Since the motor experiences high currents during starting and acceleration, the number of starts is limited as the motor size is increased. The belt operates as a constant speed device between no load and full load according to motor slip. The drive can handle belt regeneration of power up to the motor rating for extended periods. The induction motor crosses into the generator braking quadrant of operation at synchronous speed plus slip. The faster the motor is driven, the more power is generated. The power is absorbed on the power line by other motor loads.

This drive requires almost no maintenance or supporting systems. The cost and complexity of this drive type are very low. In many ways, this method represents the base case for simple small conveyors. This drive type can be configured for multiple belt drives at one or more locations. The drives must start together or in close succession from the leader to the follower on the drive side of the fabric. The drives can only load share according to the slip torque versus speed curves for each motor. Upon conveyor jam, this drive system will apply full breakdown torque to belt components before stall. This torque may be more than 200 percent of conveyor rating. Jam may be sensed by measuring high motor currents, but it is important to note that currently, the high torque has been applied. The control system for this drive type consists of the base case of conveyor protective devices that simply tell the belt to move or stop.

AC Induction Motor with Reduced Voltage Starting and Direct Coupling

Using the previous base case of the AC induction motor with direct coupling, and adding an electrical starter that can apply reduced voltage to the motor stator, we have the most common type of drive system for belt conveyors. Since the AC induction motor torque at any speed is a function of the square of the applied terminal voltage, if we control the voltage, we can control the torque during starting. There are various forms of reduced voltage starters such as autotransformer, capacitor, reactor, resistor, or silicon controlled rectifier (SCR) type. The autotransformer, capacitor, reactor, and resistor type starters use switching to create step increments of applied terminal voltage, while the SCR type starters allow for

NFPA LAT.ORG (Visitor) is current (1400) to 2012 - 2013 to Pa... Sritrakool, Suanluang, , , Thailand

continuous control of the applied root mean squared voltage. The SCR type of starter, which became economically practical in the 1970s, dominates the reduced voltage starter classification for conveyors today. The SCR starter is constructed of solid state materials with no moving or wearing parts. With conservative design in the sizing of components, the SCR starter is very reliable.

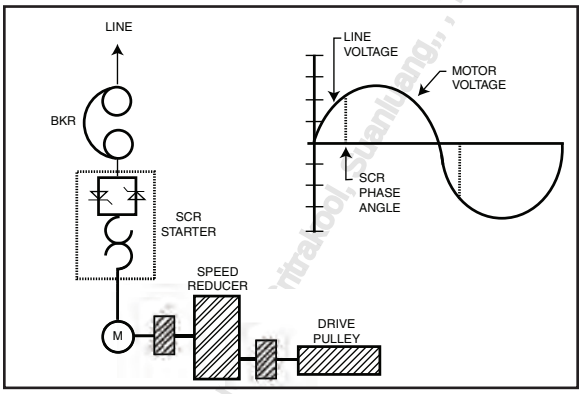

Figure 13.6
SC motor with reduced voltage starting and direct coupling

SCR starters are commonly available from fractional horsepower to 1,000 horsepower (750 kW) in voltages up 1000 VAC. For larger drives, there are some new, first generation, high voltage SCR starter designs for application at 2,300 and 4,160 VAC. To provide good starting torque at locked rotor, the NEMA Design C type motor is usually matched with the SCR starter. However, since the motor torque versus speed profile is not linear, the starter must apply a non-linear progression of increasing voltage to produce good torque control. To do this, SCR starter logic offers several common modes of control operation.
The first method is open loop voltage control. An initial starting voltage is applied within a 1-3 second ramp period and adjusted to allow for slack takeup and the initial moving of the empty conveyor. Then a linear timed ramp of voltage is applied. This method will control initial torque and accelerating average torque, but will not produce a linear acceleration of the belt. Also, this method makes no allowance for the variation in required torque for the empty versus the loaded conveyor.

The second method involves the feedback of the drive load current to the drive logic. This can be used as a current limit or current ramp control. In current limit, the output torque is limited to the withstand level of the belt or drive components. This is useful in over-motored drive applications. In the current ramp approach, the current rises linearly until the locked rotor current of the motor is attained and held until the motor accelerates above breakdown torque speed. This provides a drive that will vary the application rate of voltage between the empty versus loaded conveyor, but does not directly control belt speed. The resultant acceleration produces an S-shaped velocity profile.

The third method involves the feedback of a motor or belt speed from a tachometer. In this method, the drive controls the voltage necessary to produce linear or piece wise linear belt acceleration. This method will produce repeatable velocity versus time profiles for empty and loaded conveyors. However, the feedback algorithm must be tuned for each conveyor mechanical response. If the belt length is changing, the mechanical response will be changing. This method is often used on belts with severe undulating profiles or optimum fabric sizing. The drive thermal losses are a function of the forward voltage drop of the SCR devices, normally .5 to .7 volts per SCR device, multiplied by the root mean squared current through the SCR. The motor losses are a function of the square of the current over the applied acceleration period. Since motor power is a function of the product of the applied voltage and current,

for low voltages the current is many multiples of the full load during most of the acceleration period. For extended starting periods on loaded conveyors, this will require de-rating of the motor for multiple starts. The installation of motor stator temperature detectors can aid the control system in making decisions about motor starting using preset limits. This system can control starting torques but makes no allowance for speed control when running. The system can handle regeneration loads up to the rating of the motor. The SCR system requires little maintenance or supporting systems. The cost is low, with the cost of the solid state starter being small multiples of a full voltage line starter. The complexity of the system is low, with plug-in solid state regulators with integral diagnostics. The system can handle simple multiple drives with coarse coordination between starter controls during starting and uncontrolled load sharing according to motor slip curves during running. Conveyor jam torque, again, is only limited by the motor breakdown torque until stall or drive trip. The control system consists of the basic belt controls plus an SCR regulator firing package control with sequencing and diagnostics.

Wound Rotor AC Motor and Direct Coupling Drive

The wound rotor AC motor is a traditional conveyor drive for medium to large conveyors. It is often the drive of choice for conveyor starting for large conveyors, difficult conveyor profiles, or repeated start applications. The wound rotor motor is a special construction of the AC induction motor. In a wound rotor construction, the rotor windings are extended to the outside world by means of collector rings and brushes. By inserting resistance and reactance in series with the rotor windings, the motor controller can manipulate the rotor characteristics referred to the stator at slip speed. The wound rotor then has a family of torque versus speed curves for varying external impedance. For starting, a larger resistance/reactance value is placed in series with the rotor and then slowly reduced in value as the motor speed is increased. During acceleration, motor currents are low, typically less than 100-150 percent of motor nominal rating. Since most of the rotor heating loss is dissipated in the external network, the rotor temperature increase during starting is low. Since stator currents are low, stator heating is low. At full speed, the rotor windings may be shorted for high running efficiency at low slip, or an external trim or slip resistor may be left in series with the windings to allow load sharing or limit rate of rise of torque. Rotor voltages vary from several hundred volts on small motors to + 3,000 volts on larger drives.

Traditionally, wound rotor induction motor (WRIM) control has been by a full voltage primary contactor with multiple steps of secondary contactors that bypass progressive steps of external resistance. The resistance is stacked or arranged in steps that allow for discrete increments of acceleration torque. The wattage or thermal rating of the resistance stack determines the start duration and repeat rating of the starter. Usually, a shorting contactor shorts the rotor windings directly for running. This method is termed a "stepper" WRIM controller. To reduce belt starting torque increments, additional steps with contactors are added. Remembering that the rotor current is produced at the slip frequency, which is line frequency at rest, and lowering that frequency with increasing speed, inductors may be used to expand the range of each step. Stepper methods have been the most common type of WRIM through the 1970s.

WWW.CEMANET.COM Licensed Document Copyright © 2004 IHS All rights reserved, Purchased by: Sirirak Thailand

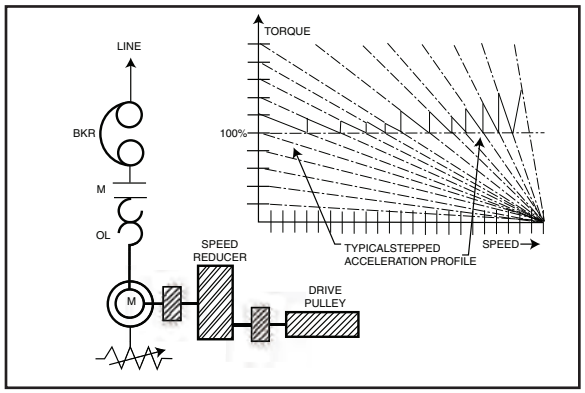

Figure 13.7
Wound rotor induction motor with a stepper secondary control and direct coupling

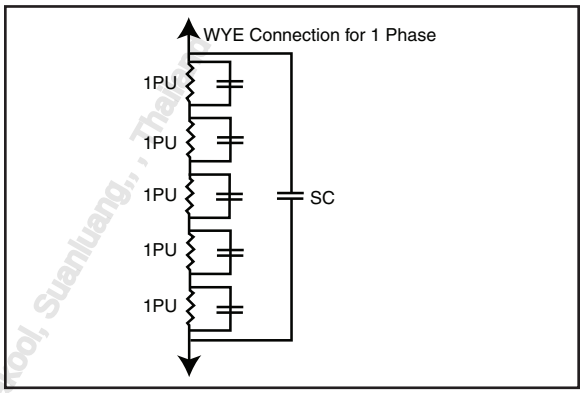

Figure 13.8
Binary stack for secondary for WRIM Control

Today, there are alternatives to WRIM stepper control methods that allow for greater flexibility, thermal capacity, and control of WRIM drives:

The first method is an adaptation of the secondary resistance stack into what is termed a "binary stack." In this method, the resistance is stacked in groups of a binary progression of per unit resistances of 1, 2, 4, 8, 16 and so on. By sequencing the step bypass contactors in a binary progression, an economical number of stepping contactors can produce an almost continuous progression of rotor control. This method is applicable to all sizes of WRIM.

The second method involves the combination of a WRIM primary SCR voltage regulator with several secondary contactor steps. By ramping the primary stator voltage from a minimum value to line voltage, the dynamic range of each secondary resistor step is increased. This method is applicable to smaller WRIM drives where space for the starter is at a premium.

The third method involves the application of SCR devices to time duty switch the secondary resistance presented to the rotor. This is termed "solid state switching of rotor resistance." By time duty switching control, the effective RMS resistance presented to the rotor may be continuously varied. This produces a stepless control. Since the rotor frequency current is line frequency at rest and decreases with increasing speed, the time switching must synchronize with the rotor frequency. The SCRs are not phase-controlled (turned on at varying phase angles during the current sinusoid) as this would produce adverse rotor harmonics. The SCRs are turned off at zero current crossings. This limits the frequency of the time ratio to less than the rotor slip frequency. This method is most applicable to large WRIM drives where stepless acceleration is required.

Although applicable to all sizes, today WRIM availability is biased toward the medium to high power. It is difficult to find suppliers of small to medium WRIM at an acceptable price. The ability to finely control the starting torque profile is a prime selling point for WRIM drives. The thermal capabilities of the WRIM drive system must be large and are dependent on the secondary network rating which is outside the rotating apparatus. The added system resistance results in lower operating efficiencies. The WRIM is primarily a conveyor starting system, but can be configured for variable speed in a 4:1 speed range. For variable speed, there are large energy losses in the external resistance network so efficiency is low. There is a type of WRIM secondary control where the slip energy is recovered and inserted into the primary power line using solid state inverter techniques and a coupling transformer. This provides continually

www.BANNETOR.COM Document (CIRA) on Apr 4, 2007 to Paperapom Sritratool, Suanluang, , Thailand

varying speed with small losses. The WRIM drive can accept overhauling regeneration energy when running up to the motor breakdown rating, but has a severe problem with regeneration during starting with the secondary resistance inserted.

The maintenance of the WRIM is medium. Brushes wear about 1-2 mm per 1,000 hours. Supporting systems involve maintenance of the external resistor and cooling systems. The cost of the WRIM drive is 200-250 percent of base systems for medium power, and 125-150 percent of base systems for larger power.

The electrical complexity of the WRIM drive can vary from medium to highly complex. The drive layout is mechanically simple. The WRIM can be configured for multiple drives. Torques can be finely controlled and proportioned during starting. During running, the drives will share load according to the motor torque versus speed curve slopes. A permanent slip trim resistor can permanently bias the load share characteristics at the expense of energy loss. WRIMs usually have high breakdown torque ratings when running shorted. Care must be used when selecting the motor and control scheme to minimize the chance of overloads of the motor and conveyor system components at higher than projected operating loads as these can cause severe system damage. Some designers allow for permanent slip resistors to soften the torque versus speed rise during jam to allow the jam detection time to disconnect the drive. This can require as much as 3-5 percent of additional slip at the expense of energy loss.

Today, the control system for a WRIM drive is usually based on computer control of the secondary resistance switching network based on system parameters such as speed feedback, current feedback, motor temperature, resistance temperature, size of belt load, and multiple drive motor load balance. Computer control apparatuses have made such methods as binary switching simple and effective. Most control systems for WRIM conveyor drives are custom designed for the application.

DC Motor And Direct Coupling

DC motors are commonly available in series, shunt, and compound windings. The motor rotating armature is wound and brought out to the outside world through brushes. For belt conveyors, usually shunt or compound winding DC motors are used. In a DC shunt motor, the base speed is determined by a constant shunt field excitation current. The motor operating speed is a linear function of the armature voltage, while the motor torque depends on the armature current. The base speed can be lowered by increasing the field current and raised by decreasing the field current, within limits. The motor base speed is reached at full armature voltage.

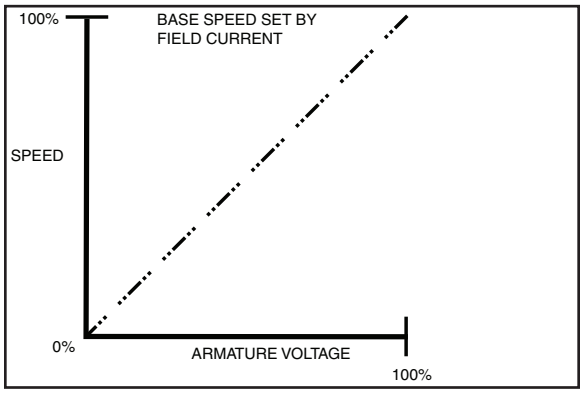

Figure 13.9
DC shunt motor speed vs. voltage

WWW.CEMANET.ORG has licensed Content No. 1460-4 on 4/4/2017 to Prasert Sinkao (psuanluad@gmail.com) Thailand

The full range of DC motor torque versus speed is determined by the motor commutation limit curve. Below base speed, the motor operates in a constant torque region limited by armature current, and above base speed in the constant power region with declining torque limits. The torque limit of DC motors can be large, between 200-300 percent of base rating. DC motors can supply very high forces to a belt conveyor under dynamic conditions unless constrained by the motor controller. In general, DC shunt motors are larger than the equivalent AC motor for the same power, resulting in a higher inertia or WK^2. The DC motor has a longer drift time on de-energization than an AC motor.

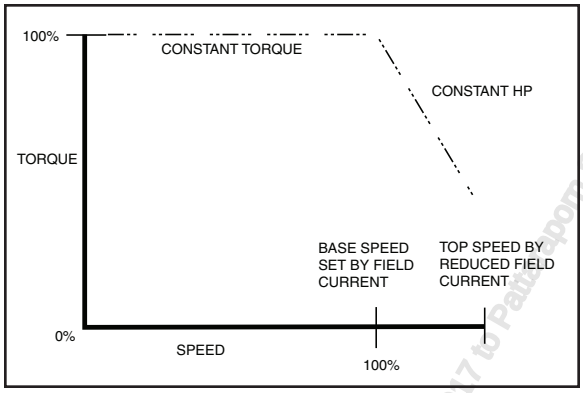

Figure 13.10
DC shunt motor torque vs. speed

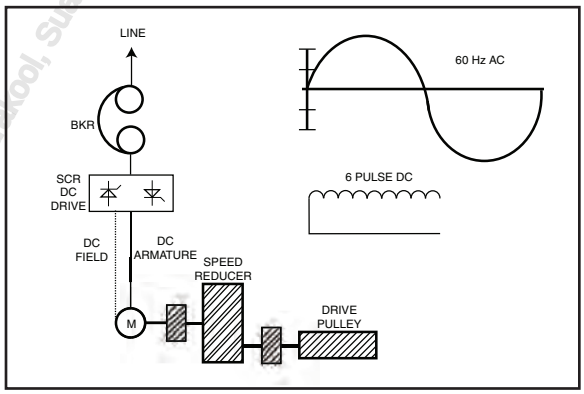

Figure 13.11
DC shunt motor with SCR armature control and direct coupling

The traditional DC motor controller for a belt conveyor consisted of a contactor controlled system that controlled armature voltage from low to high during starting to running with a constant shunt field excitation. The armature voltage regulating system usually consisted of a series of resistor elements placed in series with the DC motor armature. The system raised voltage by successively removing resistor steps until the motor armature operated on full voltage for running. With the arrival of simple AC belt drive systems, the application of DC drive motors to belt systems became unpopular. This was often due to the losses in dropping resistors, the complexity of the control system, and the maintenance of the resistors and motor brushes.

In the late 1960s and 1970s, the development of solid state DC shunt motor control systems, based on silicon controlled rectifiers or thyristors, made continual variable speed operation of DC shunt motors practical in many industrial applications. The thyristor drive offered low losses, fast response, repeatable control, small packaging, good speed regulation, and motor current limit. Reliability of DC drives on thyristor systems today is very good. With 20+ years of mill, mine, and plant duty, the thyristor drive is very mature. The thyristor DC drive phase controls an AC source to produce a linear variable DC supply for the motor armature while producing a filtered constant DC or a controlled DC for the shunt field. The drive can be configured as an armature voltage regulator or as a speed regulator, both with secondary current loop monitoring and regulation on high currents. The standard voltage regulator will control speed with a 3-5 percent range and the speed regulator from 1-3 percent range from no load to full load. DC drives are considered for belt conveyors requiring variable speed operation for extended periods, multiple full load repeated start capability, very large drives, controlled overhaul regeneration braking, multiple motor active load share, or speed control for process regulation.

DC drives are available in sizes ranging from fractional horsepower to thousands of horsepower (kW). DC motors are available in different enclosures from open to totally enclosed, with self and forced

www.CEMAT.org has used this document (1984) on Apr 24, 2017 to Patil Sagar Shirsekool, Sushiladevi, Thiruvo

ventilation systems. On very large drives, DC motors are offered in slow rpm models that eliminate speed reducers. There are wraparound motor mounting designs that also eliminate motor bearings from the design. The DC drive offers precise and repeatable torque control at all speed ranges. The DC motor and controller are thermally rated for continuous operation at all speeds. Multiple repeated starts at reasonable accelerations are allowable. If the conveyor system is capable of overhauling, or if the drive must provide controlled braking force during stopping, the DC drive must be configured with a regenerative four quadrant controller with a second thyristor bridge capable of directing power from the DC motor to the AC power line. The braking or regeneration force can be precisely controlled. The DC drive system requires a low level of maintenance. The DC motor and cooling system requires periodic inspection and cleaning. The cost of a DC drive system varies widely depending on the size and type of motor enclosure and the complexity of the controller. The costs for a medium to large drive system are often 125 percent to 150 percent of another system configured for starting duty. However, the cost of a DC drive may be considered the base cost for medium to large conveyors with continuous variable speed operation.

The DC drive system is very simple mechanically, but can include complex electronic controls. However, since the control types are mature and widely used in other industries, the reliability and troubleshooting diagnostics are good. DC drives are a good choice for multiple drive systems with precise load share requirements. Multiple DC drives can be configured to "follow" each other with reference to speed, torque, and other system parameters. The response of the DC drive to signal changes is only limited by the mechanical systems' ability to change. In the case of the conveyor jam, the DC drive can limit the motor output torque via a fast acting current limit minor loop. This is normally 150 percent of the nominal rating, but can be set to lower levels if desired. The control system for a DC drive conveyor consists of the normal belt controls, a thyristor firing control regulator, and possibly a belt tachometer for speed regulation of the drive. Thyristor drives are a source power system harmonics. Larger DC drive installations will require a power system study for harmonic and power quality effects on other facility equipment. These effects are greater when the DC drive is configured for regeneration.

There are new variations on the traditional DC drive such as brushless DC. In brushless DC, the motor has stator windings like an AC motor, but has a permanent magnet rotor with north and south poles and a position encoder. The brushless control synthesizes a stator waveform that generates a magnetic field that is always 90 degrees ahead of the rotor position. Brushless DC drives offer full torque at all speeds with precise motor positioning. Brushless DC is limited presently to small and medium sized drives, at a high cost premium.

AC Induction Motor with Variable Frequency Control and Direct Coupling

Variable frequency drive (VFD) operation increases overall system efficiency. VFDs can start motors at a slow ramp speed, which minimizes starting current. Conveyors can be operated at slower speeds instead of across the line speed, therefore the system only uses as much energy as is required. VFDs operate at a high power factor (.95 or greater), which means that power consumption will be reduced. Intelligent energy saving functions allow the motor to run most efficiently at all operating points.

Decentralized VFDs are becoming more available in the conveyor market. Before decentralized drives were introduced, VFDs were mounted in enclosed panels and were often long distances from the motors that they were controlling. Long cable lengths incurred additional costs in material, cable supports and labor as well as cable energy losses. VFDs produce heat, so cooling systems were installed into panels. Decentralized VFDs are mounted close to, or even on, the motors that they are powering. Cable runs are

minimal, so the system is more energy efficient. Decentralized vfd's are enclosed, so panels and cooling systems aren't necessary. Many decentralized VFDs can operate more than one motor, which reduces equipment costs

In this method, a simple AC induction motor is coupled through a speed reducer to the drive pulley while an electronic controller applies a synthesized AC waveform to the motor stator. The AC motor operating speed depends on the number of stator poles and the applied line frequency.

$$rpm_{ac-motor} = \frac{120 \times \text{Line Frequency}}{\text{Number of Poles}}$$

Equation 13.12
$rpm_{ac\text{-}motor}$, AC motor speed

For example, a 60 Hz, 1,200 rpm AC motor will run at 600 rpm when supplied with a 30 Hz voltage source. Since power is torque times speed, this motor will be running at constant torque but variable power according to speed.

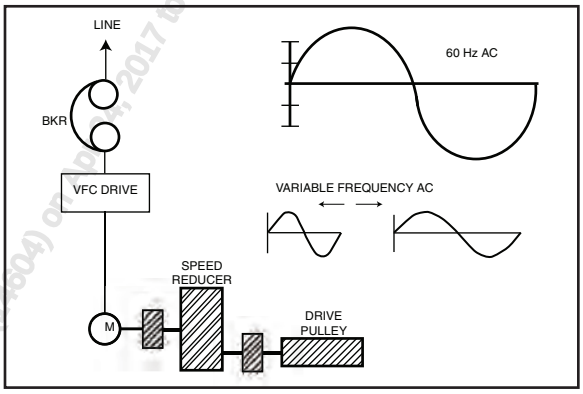

Figure 13.13
Variable frequency AC motor and direct coupling

The controller that synthesizes the waveform is called a variable frequency drive, inverter, or converter (VFD, VFI or VFC). Generally, a VFD consists of a rectifier section that inputs line frequency and makes DC, and an inverter section that takes the DC and makes an AC source with frequency and voltage control.

There are three common types of VFD controllers. The most common is the pulse width modulated type. This consists of a static rectifier section and a switching inverter section. The frequency and voltage are controlled by modulating the on versus off time of the DC link with high speed switching. This type is most common at voltages up to 575 VAC from fractional horsepower to 600 horsepower (448 kW).

The second type has variable voltage inverters. This design uses power SCRs under phase control to vary the DC supply and power SCRs or transistors to switch the output in a six or twelve-step output waveform to approximate a sinusoid current. This type is common in sizes from several hundred horsepower through 1,000 horsepower (746 kW).

The third design is called a current source inverter. In this type, power SCRs are used to synthesize an AC square wave current. This type is usually used in larger sizes through several thousand horsepower

www.CEMAnet.ORG has issued this document (1146004) on Aug 04, 2017 to Pattaraporn Sirakoon (pannluck@...), Thailand

(kW). In most VFDs, the ratio of the output voltage to frequency is maintained as a constant below base speed in order to not overexcite the motor magnetic fields. Some VFDs can be configured to run above base speed, or operate with an output frequency above the input frequency. At above base speed, the VFD operates at a constant power with declining torque rating.

The availability and features of these drives increase each year, while the costs decrease. In certain size ranges, the costs of AC VFD are less expensive than traditional DC, therefore the use of VFD drives in conveying applications have increased. VFD type drives are most common, found on small belts used as part of sample or process control systems to very large belts for sophisticated variable speed operation, or retrofits where the AC direct coupled drive motors are already in place.

VFD drives are available in sizes from fractional horsepower to thousands of horsepower (kW). Since the motor is operating on a variable frequency, variable voltage controlled source at all times, torque control for starting is precise. For a given frequency output, the motor speed is proportional to frequency less slip.

The thermal rating of the drive is based on the rating of the VFD electronics and the motor cooling capability. Since the electronics are inherently current limited, the VFD will not be run overloaded. The motor rating at speed less than base speed may decrease due to low cooling from the motor fan and increased losses due to synthesized waveforms. Extended operation at low speed may require an external motor cooling fan, and gear drive modifications for lubrication and cooling. VFDs can normally operate as variable speed drives over a 10:1 speed range. Operating a belt conveyor at reduced speeds, can also help to extend the belt and component operating life. Operation at very low speeds may result in torque pulsations to the conveyor.

VFDs vary in their ability to accept and conduct regenerated overhauling energy. If the belt profile can result in overhauling, the VFD must be equipped with regeneration or dynamic braking options. The belt designer must quantify the overhauling forces to equip the VFD with adequate capacity.

The major supporting systems required for VFD installations are for training of maintenance and spare electronic parts. In general, the present costs of VFD systems are generally higher than other drive systems, however the costs have been decreasing, particularly in smaller horsepower (kW) drives. VFD drive systems are mechanically simple, but electrically complex. VFD drives can be configured for multiple drives with active controlled load sharing. In conveyor jam, the VFD responsive current limit will set an upper limit for output motor torque. This is nominally 150 percent on smaller VFDs and as low as 110 percent on larger units. The control system for a VFD drive system consists of the normal belt permissive controls, a microprocessor-based electronic regulator, a power electronic converter with protection, and sometimes a belt speed transducer. There are some large synchronous AC motors in a wraparound design with cyclo-converter type VFD drives operating at very low rpms.

Motorized Conveyor Pulleys

Motorized pulleys may use AC Induction or Brushless DC Motors and are direct coupled. The previously described motor operating characteristics, limitations and speed controls would apply to a Motorized Conveyor Pulley drive. Motor, gearing and bearings are protected inside of a high strength pulley tube that is both a structural system housing and belt drive.

Motorized Conveyor Pulleys rotate on a stationary shaft, which is fixed on both sides of the rotating pulley with mounting blocks or flange mounts. Oil provides lubrication and cooling to sealed internal drive components such as gears, bearings, seals and motor. Fewer rotating parts with fewer friction surfaces,

Visit www.SAMMNET.com for more content (CEMA) on Apr 19, 2017 10:08 AM Sport Siriroon Co., Ltd. (Head), Thailand

which are splash lubricated and protected from contamination, can improve efficiency and reliability. There are only two sealing points for contaminant entry or lubricant loss. Thermal ratings may be affected by the conveyor duty cycle. Since the moving belt extracts heat from this totally enclosed drive system, intermittent applications may need to be service factored accordingly.

Compact Motorized Conveyor Pulley drives are mounted between the conveyor rails for space savings, unobstructed views of material flow and the mass of the drive is a more balanced structural load on the conveyor. These drives are generally used on small to medium power conveyors up to about 300 hp (224 kW). Traditional accessory options such as backstops, brakes, pulley crowning and lagging configurations are available for most applications. Also see figure 13.30.

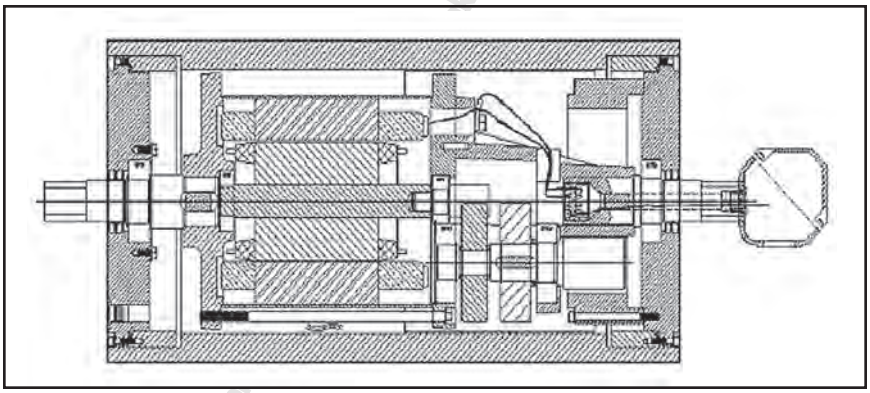

Figure 13.14
Cross sectional view of a typical motorized pulley assembly

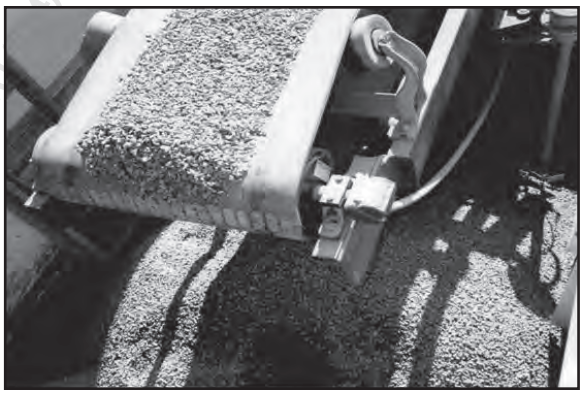

Figure 13.15
Motorized conveyor pulley drive

AC Induction Motor with Full Voltage Starting and Fixed Fill Fluid Coupling

This method of conveyor drive has become a common method for small to medium power conveyors configured for starting duty and simple belt profiles. Fixed fill fluid couplings are normally mounted mechanically between a normal AC induction motor and speed reducer. The motor is started across the line, with the fluid coupling allowing the AC motor to start unloaded. The fluid coupling gradually transfers torque from the motor to the driven load, allowing for a "soft" acceleration.

WWW.ENGINET.ORG has issued this document (1.00) to Apollo Technical School, Stanwell, Thailand.

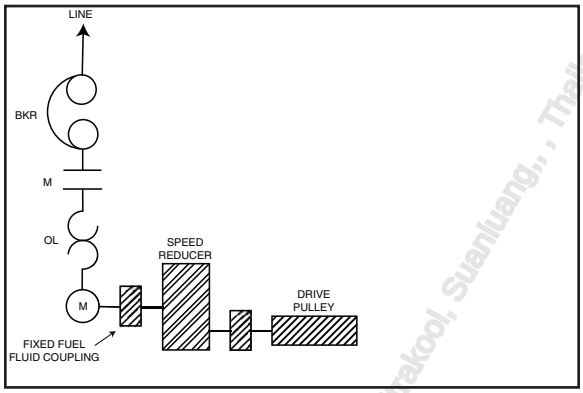

Figure 13.16
AC motor with fixed fill fluid coupling

In simple terms, a fluid coupling consists of an input impeller attached to the prime mover, an output impeller connected to the driven machinery, and a shell casing that contains a fixed volume of fluid positioned between the impellers. Within this closed volume, the operating fluid circulates in a continuous vortex between the input impeller and the output impeller (runner).

The torque transmitted by the coupling is proportional to the difference in moment of the fluid as it enters and leaves each member. The speed difference, or slip, creates a net difference in opposing centrifugal heads of the impeller and runner to circulate fluid against friction and shock losses within the working circuit. The torque required from the prime mover will be only that required by the runner plus that required to sustain the losses. Because fluid couplings are centrifugal machines, the laws of geometry apply. Therefore, for the same percent slip and filling of the working circuit, the torque transmitted is proportional to the fifth power of the working circuit profile, the cube of the input speed, and the density of the working fluid. For a given frame size, the torque versus speed slip characteristics are altered by changing the fluid fill. The contained fluid is usually thin mineral oil, but synthetic oils, water glycol mixtures for low temperature temperatures are available. By virtue of the viscous coupling, the transmission of torque transients from motor to belt, or belt to motor, are damped.

The advantage of fixed fill fluid couplings is simplicity. For belts, the standard fluid coupling has four common problems. The starting torque transmitted after motor starting may be too high, above 200 percent. This results in rapid belt acceleration and possible tension shock waves. To extend the start period, the fluid fill must be lowered, resulting in coupling fluid heating during starting and running. The coupling transmission of torque is uncontrolled and uncoordinated with belt loading. The fluid coupling provides some softness for protection of the motor from shocks due to conveyor jamming or other system issues, however because it is between the motor and gear reducer, it offers no protection to the reducer or low speed coupling.

Modifications have been made to most standard fluid couplings now used for belts. First, the coupling reserve of fluid has been expanded outside the working chamber of the circuit into delay chamber areas. At rest, these areas fill with fluid, lowering the working circuit level. At start, the working circuit lower level transmits an initial lower level of torque, 125 percent to 140 percent. As the coupling accelerates, centrifugal force causes fluid to flow from the delay chamber through orifices into the working area of the coupling. This raises the transmitted torque slowly, allowing for extended acceleration periods (15-45 seconds), running the coupling at a more efficient fluid level, and increasing the thermal capability

www.KEWAVE.com Please report illegal use of this document to info@kewave.com Phone: +66 (0) 2 2555 2555 Kewave Co., Ltd. 1/1 Soi Nakniwat 3, Nakniwat Rd., Ladprao, Bangkok 10230 Thailand

of the coupling. The coupling start time may be adjusted by orifice selection and the final transmitted torque level by fluid fill. Couplings with delay chambers require a period at rest between starts to allow gravity flow of the fluid to the delay chamber. On some couplings, there are multiple orifices opened by centrifugal switches as the coupling accelerates the load. To increase thermal capacity for multiple starts, couplings can circulate working oil through expanded coupling storage chambers while running to increase coupling radiated heat rates. Most couplings have a fast heat dissipation rate when running and a slow rate when at rest.

In applications on conveyors, couplings may have to be oversized to obtain adequate thermal capacity for multiple starts. If the coupling overheats, a temperature sensor can shut down and hold off the drive or, at extreme overheat, the working fluid dumps through a melting alloy fusible soft plug as an orifice relief.

Fluid couplings are available in all sizes from very small to very large (1250 horsepower (930 kW)). The coupling is rated as a torque device employed on the high speed motor shaft. Thus the coupling size for the same power is smaller at higher speeds. For fluid coupling drives, 1800 rpm motors are often chosen. Selection of the proper fluid coupling system for torque control requires consideration of the desired start up time and the inertia of the load and the desired coupling type, coupling size, orifice selection and fluid level. The orifice and fluid fill may be adjusted in the field with care.

The effect of fluid fill on torque and thermal rating is extremely non-linear. The coupling offers no controlled torque by the control system. The thermal rating of the coupling is limited. To increase coupling rating, the designer must increase coupling reservoir volume to a larger size, increase fill, decrease delay fill time, or provide forced ventilation. The fluid coupling is not capable of operating a conveyor at variable running speeds. The fluid coupling can transmit overhauling regeneration forces to the motor when running up to the slip limit of the coupling. However, the holding force during starting is limited. The fluid coupling is normally not a good choice for pure downhill or regenerative applications. The properly applied fluid coupling requires little maintenance and no supporting systems. Due to the slip of the coupling, this system is inherently less efficient than other methods and can typically add from 2 to 6 % energy loss to the drive system.

Fluid coupling applications are mechanically and electrically simple. The coupling mounting may impose some overhung loading on motor or speed reducer bearings. Fluid couplings can be used on multiple drive applications for starting. During running, the drives will share load according to the torque versus speed curves of the drive motors and the slip characteristics of the couplings. No active control is available. For conveyor jams, the fluid coupling will limit the rate of rise and amount of output torque of the motor to the slip level of the coupling, usually 125-175 percent. The control system for fluid coupling drives consists of the base case of belt permissives and sensors for fluid coupling over temperature and fluid dump. The control system should provide for a minimum idle time for drain back and excessive restart prevention.

WWW.CEMANET.OTE Chapter 13 Document (3454) 04 Apr 2017 to Pedro Lopez Estrada (plopezestrada@gmail.com), Trial User

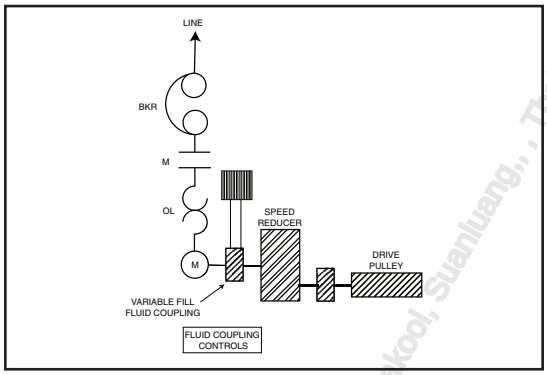

Figure 13.17
AC motor with variable fill hydrokinetic coupling

AC Induction Motor with Full Voltage Starting and Variable Fill Fluid Coupling

By adding a system for controlling the fill of the fluid coupling during starting and running, the variable speed and controlled torque requirements of some complex conveyors with a hydraulic drive system are addressed. Again, the AC induction motor with line starting is the prime mover. There are many commercial designs of variable fill hydraulic drives. The type most commonly applied to conveyors is the scoop tube or scoop trim control drive. In this system, the hydraulic working circuit is contained in an inner casing surrounded by a rotating reservoir casing. A sliding scoop tube inserted in a stationary axial position to the reservoir determines the suction level for a working circuit supply of oil. By mechanically moving the scoop tube actuator, the fill level of the working circuit may be controlled. The fluid passes to a sump where a separate pump returns fluid to the working circuit. This system is more complex than fixed fill couplings, but allows for greater fluid capacity for thermal rating. There are also the less common types of leak-off and put-and-take couplings.

In the variable fill hydraulic drive, an external control positions the scoop tube actuator for transmitted torque control. This type of drive has a torque versus speed curve for each fill level. The drive can control starting torques and vary running speed over a 6:1 ratio. While slipping, the drive loses energy in waste heat in the coupling fluid. An auxiliary cooling system is designed to remove the waste heat. This drive is often used on conveyors that require precise torque control and the ability to run at variable speed for limited periods. The variable fill hydraulic drive is usually applied on medium to very large conveyors.

The variable fill hydraulic coupling can be found in all sizes. It offers precise torque control, but the speed of response can be slowed by the scoop tube positioner and fluid fill delay time. Also, since no unique position of the scoop tube delivers the same torque, a feedback regulator must adjust the drive speed for different belt loadings. The thermal rating of the drive system depends on the volume of the fluid and the auxiliary cooling system. The drive can run at variable speeds at the expense of heat losses. The drive can accept regeneration during running up to the limit of the coupling slip at each speed. The drive response to over-speeding during overhauling can be slow.

The variable fill fluid coupling provides system vibration dampening and overload protection in the event of a system jamming. Energy efficiency and heat loss, while generally less than a fixed fill unit, remains higher than that of other drive systems. The variable fill coupling drive requires regular maintenance of the supporting hydraulic fill and cooling equipment. The cost of this drive type is medium to high

WWW.CEMAnet.ORG Member Resource (CMA) 6/7/2013 2:11:10 PM to Patcharaporn Sritrakool, Suanluang, , , Thailand

depending on size. Positioned between the motor and speed reducer, the drive can be mechanically complex with supporting system piping. The drive can be electrically complex due to feedback regulation and scoop tube position actuators. This drive can be used on multiple drive belts with starting and running torque control between drives. With conveyor jam, the drive can limit the output of motor torque to the slip level of the coupling at any speed. The control system for this drive consists of the base belt control permissives, the control of the coupling level actuator, and control interlock to the supporting systems. Most hydraulic drives require a belt speed feedback for proper regulation. The responsiveness of the system is somewhat slower than other drive types due to the inherent time required to adjust the fill level of fluid in the coupling in response to a feedback signal from the belt system.

AC Induction Motor and Mechanical Transmission with Integral Hydroviscous Coupling

Power is the product of torque multiplied by speed. For an AC induction motor prime mover with constant speed, the driven belt speed and torque is a function of the speed reducer ratio and drive pulley diameter. A mechanical transmission with integral hydroviscous coupling drive is a class of equipment that varies the effective speed reducer ratio continuously while running.

There are assorted types of variable mechanical transmission. One particular type described here is with an integral hydroviscous coupling on the output shaft and is a popular but proprietary unit to a particular transmission manufacturer. In this type of drive both the torque and speed output to the load is varied dependent on the hydraulic pressure operating the hydroviscous coupling.

WWW.CEMANET.ORG has issued this document (14604) on Apr 2017 to Rensselaer Polytechnic Institute, Stanford University Libraries



Figure 13.18
AC induction motor and mechanical transmission with integral hydroviscous coupling

In typical operation of this type of drive the AC motor starts direct across the line and accelerates to full speed at no load. The drive input shaft is connected to a sun gear planetary speed reducer. The sun gear rotates the three planet gears that spin an outside ring gear. The ring gear is grounded to the gear case by a hydroviscous clutch disk pack called a reaction brake. The output shaft of the transmission is an extension of the planetary gear carrier. Increasing the hydraulic pressure on the clutch pack will cause the ring gear to decelerate or slow down which in turn forces the planetary gear carrier, and output shaft, to accelerate. By control of the hydraulic pressure on the clutch, or reaction brake, the running slip, or speed, and transmitted torque may be varied on demand to the amount of torque and speed (power) required by the belt conveyor. During a conveyor start the clutch pressure is slowly ramped to apply a retarding force to the ring gear. The output shaft speed increases in reverse relationship to the speed of the ring gear. In a single drive conveyor system at full speed the reaction brake is fully locked. For multiple drive unit conveyors the drives are allowed to slip by approximately 2%. This allows very accurate control by varying the clutch pressure in response to belt speed and tension signals and also allows for load share to be accomplished by measuring all motor powers and then controlling to balance the load between motors. The small amount of slip enables small adjustments of pressure to manipulate the torque transmitted smoothly without the clutch exhibiting stiction effects from a locked clutch. The hydraulic oil circulates from the hydroviscous clutch brake to an external cooler for heat dissipation.

WWW.CEMANET.ORG has issued this Publication (Book or Part) to [illegible] Sri[illegible] and

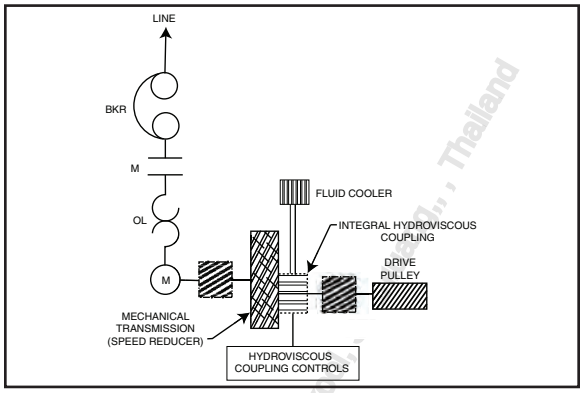

Figure 13.19
AC motor and variable mechanical transmission coupling

The variable transmission can provide a starting and running speed control system over an extended range. The variable transmission replaces the starter and speed reducer in the system. The variable transmission drive is commonly used on medium to large sized conveyor drives where precise starting control and some variable speed operation are required.

The variable type drive offers continuous and precise torque control with response determined by the hydraulic pressure response time. The thermal rating of the drive is determined by the operation time at variable speed and the rating of the external oil cooling system. The drive can operate over a variable speed range for continuous and extended periods over a limited speed ratio depending on size. The variable transmission drive can handle regeneration overhauling force up to the limit of the clutch pack slipping force when running at less than full speed, and up to motor rating at full speed. The variable transmission system requires a medium level of supporting systems for operation related to the hydraulic power unit with oil cooling and oil circulation. The cost of the variable transmission drive type varies from 100-150 percent of the base fixed fill fluid coupling drive in medium sized applications. The layout feature of the combined coupling speed reducer unit may reduce overall capital and installation costs. The system is medium in mechanical and electrical complexity. The variable transmission system can be configured with multiple drives with active load sharing during starting and running. With conveyor jam, the variable transmission system will provide a slip torque limit when running at less than lock up speed. When the unit is locked, the hydraulic pressure can be set to slip at a predetermined level, usually 10% above that required to operate at full load. This provides protection for all drive components in the system including the reducer and the motor. A low speed hydroviscous coupling provides a smoother activation and slip control than high speed hydroviscous couplings in this application. The control system for the variable transmission consists of the base case of conveyor permissives, a regulator for the hydraulic pressure to the clutch packs, the control of the auxiliary cooling, and protective devices for transmission overheating.

There are other commercial mechanical speed ratio type drives that can be used for conveyor starting systems. Variable speed mechanical drives are available from fractional horsepower through large sized applications.

OTHER CONVEYOR DRIVES

There are other less common types of conveyor drives that may be used. An Eddy-Current coupling is a magnetic coupling, non-contact, smooth rotor, and stator that couples a constant speed AC motor to a load. By varying the excitation magnetic field on the coupling, the slip may be controlled. Waste heat

www.GEHANDBOOKS.com | Thank you for your business. Downloaded by [illegible] on 04-Jul-2017 to Purchase from Sitrakorn [illegible], Thailand

is dissipated in the coupling frame. Eddy-Current couplings were used historically on larger conveyor systems, but are not in common use today. There are hydroviscous drives that couple between the AC motor and the load. The hydroviscous drive is a fluid drive that depends on the amount of pressure between impeller units to determine the coupling torque. Slip energy is dissipated in the fluid. These units are less common on conveyors than hydrokinetic fluid couplings. Hydrokinetic drives are adaptations of fluid couplings where a reaction impeller is placed in the working circuit between the drive impeller and the output runner. By controlling the reaction impeller slip, the output runner torque may be manipulated.

This is the principle of many automotive type torque converters. Creep or inspection drives are auxiliary pony drives coupled to the prime mover drive high speed shaft by overrunning clutches, roller chains, or belts that allow the conveyor to operate at a highly reduced speed for maintenance purposes. Creep drives use a disconnect coupling or over-running clutch, and are not back-driven in normal operation. There are other drive types that the user may encounter that are beyond the scope of this discussion.

SPEED REDUCERS

Speed reducers provide a mechanical means for reducing the rotational speed and increasing the torque of the prime mover. Proper selection of a gear drive depends on many factors including input power, operational speed, load demand, external loads, duty cycle, environment and facility needs. The American Gear Manufacturers Association (AGMA) and DIN/ISO establish standards for gear drive design.

Configuration

Many shapes and configurations are available. Selection is based on the mounting configuration required and may depend on space limitations, structural cost, or maintenance issues. Examples of different configurations are parallel, right angle or concentric shaft designs. Reducers can be foot mounted to a structure and coupling connected to the drive pulley or shaft mounted directly on the drive pulley.

Capacity

The actual gear drive capacity is determined by either the lowest rated mechanical component or by its thermal rating. Thermal rating is defined as the maximum power that can be continuously transmitted through the gear drive while not exceeding a specified sump temperature. Gear drives rated to AGMA standards allow a maximum of 200°F (93 °C) sump temperature. Other temperatures must be verified with the equipment manufacturer.

Reducer selection is made based on an "equivalent power rating" which is calculated by multiplying the prime mover rated power by a service factor. The speed reducer must have a mechanical rating capacity equal to or higher than the equivalent power rating and a thermal rating (without service factor) higher than the application power. Typical service factors are provided in Table 13.20. Reducers rated according to AGMA or DIN/ISO are designed to withstand 100% momentary overload to accommodate peak loads during starting and other transient conditions.

www.cemanet.org/store Issued to: Document (2164) Apr 24, 2017 10:26 Peterapom Sirikongsiri (Siamlucky) , Thailand

Loading	0-3 h/day	3-10 h/day	> 10 h/day
Uniform	1.0	1.0	1.25
Heavy Duty	1.0	1.25	1.5
Severe	1.5	1.75	2.0

Table 13.20
Typical service factors for speed reducers in conveyor applications

The service factors in the table are minimum recommendations for speed reducers driven by electric and hydraulic motors. They should be used only after taking into account all of the external influences, such as overload and shock, which may affect the operation of the speed reducer.

Lubrication

Lubrication and proper lubricant maintenance are crucial to long life and reliability of the speed reducer. A filtered breather and grease purgeable seals should be employed to protect the lubricant from ingress of contaminants, which could damage the gears, bearings or lubrication system. Depending on the gear drive configuration, the lubricant delivery method may be dip, splash, gravity feed, or pressure lubrication.

Of utmost importance is the viscosity of the lubricant. For a gear drive to operate properly, oil viscosity must be within certain limits. Viscosity will change as the sump temperature changes. High oil temperatures decrease the oil's viscosity and increase its oxidation rate. A reduced oil viscosity results in a reduced oil film thickness between gear teeth and bearing elements, which in turn may reduce the life of these components.

Operational speed impacts lubricant temperature, level, type and delivery method. For instance, a variable speed drive operating in a range of 1,750 to 35 rpm may require using a pump to provide adequate lubrication to the gears and bearings at the slower speeds. It is also probable that at 35 rpm, heat generation will be low and cooling not required. If the reducer input speed were at 1,750 rpm, splash lubrication may be adequate and cooling may be necessary. Environmental conditions also impact the oil temperature and the speed reducer's ability to dissipate heat.

Bearings

Bearing types for speed reducers in conveyor applications typically include tapered roller, spherical, and cylindrical. Ball bearings may be used on lower power applications. Bearing performance is typically measured by L_{10} life. Bearing L_{10} life is the number of hours at which 10 percent of seemingly identical bearings will experience a spall of 0.01 square inches (0.065 cm^2). L_{10} life can be calculated as unadjusted or adjusted for operating conditions such as lubricant characteristics, temperature, alignment, and contaminants.

Specifications that call for a high L_{10} life (greater than 50,000 hours) can have adverse effects on bearing performance resulting in light loads that cause rollers to skid. An unadjusted L_{10} life of 5,000 hours should be suitable for most applications operating less than 10 hours per day. Caution should be used when adjustment factors are applied as bearing adjusted life calculations are not standardized between manufacturers and similar operating conditions will provide different results. It should also be noted that with advances in bearing materials, most bearings do not fail as a result of a fatigue spall as calculated by L_{10}. Common bearing failures are due to contamination, poor lubrication, overload, or improper installation.

www.SEVANATECH.com Downloaded this document (GUEST) on April 17 to Pasaporn Sritrakool, Siamtung., , Thailand

BELT CONVEYOR DRIVE ARRANGEMENTS

Belt conveyor drive equipment normally consists of a motor, speed reduction equipment, and drive shaft, together with the necessary machinery to transmit power from one unit to the next. The simplest drive, using the minimum number of units, usually is the best. However, economic reasons may dictate the inclusion of special-purpose units in the drive. These special-purpose units may be required to modify starting or stopping characteristics, to provide backstop devices, or perhaps to vary the belt speed. The final selection and design of a conveyor drive arrangement is influenced by many factors, including the performance requirements, the preferred physical location, and relative costs of components and installation.

Speed-Reduction Mechanisms

The illustrations in Figures 13.21 through 13.30 show most of the belt conveyor drive equipment assemblies currently in common use. The following comments apply to these figures:

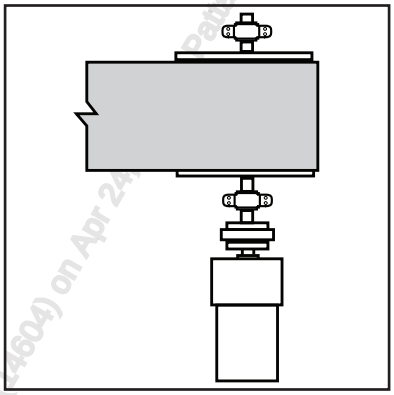

Figure 13.21
Gear motor drive

Gear motor directly connected by flexible coupling to drive shaft, is a simple, reliable and economical drive.

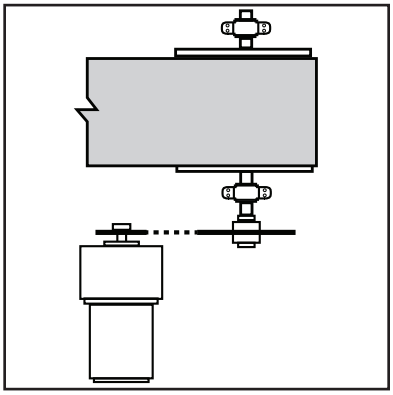

Figure 13.22
Gear motor and chain drive

Gear motor combined with chain drive to drive shaft is one of the lowest cost flexible arrangements which is both substantially reliable and capable of providing additional reduction.

WWW.CEMANET.ORG has issued this document (14604) on Apr 24, ... Patterapon Chitrakool, Standard, ... Limited

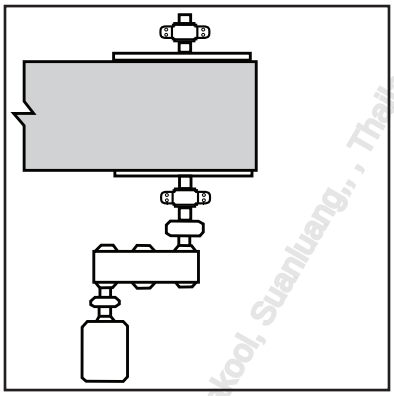

Figure 13.23
Parallel-shaft reducer and direct coupled motor drive

Parallel-shaft speed reducer directly coupled to both the motor and the drive shaft is versatile and reliable, and are generally heavier in construction and easier to maintain. It is particularly well suited to large conveyors.

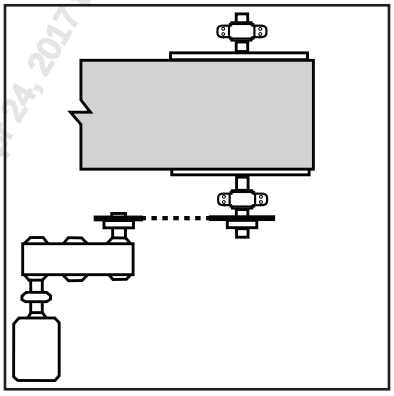

Figure 13.24
Parallel shaft reducer with chain drive

Parallel-shaft speed reducer directly coupled to the motor and using a chain drive to the drive shaft, provides flexibility of location and is also suitable for high power/low speed/high torque applications.

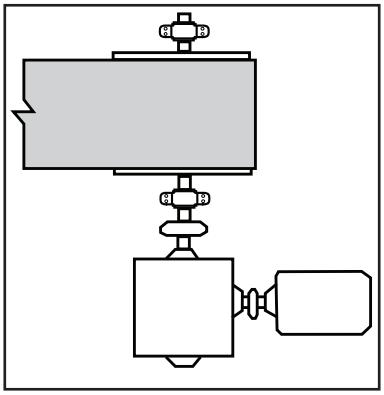

Figure 13.25
Spiral-bevel helical speed reducer drive directly coupled to motor

WWW.CEMANET.ORG has licensed this document (14604) on Apr 24, 2017 to Pacharaporn Sritrakool, Suanluang, , , Thailand

Spiral-bevel helical speed reducer (or worm-gear speed reducer), directly coupled to motor and to drive shaft. This configuration is often desirable for space-saving reasons and simplicity of supports. The spiral-bevel speed reducer costs somewhat more than the helical-worm speed reducer and considerably more than the worm-gear speed reducer but is more efficient than the helical-worm and considerably more efficient than the worm gear.

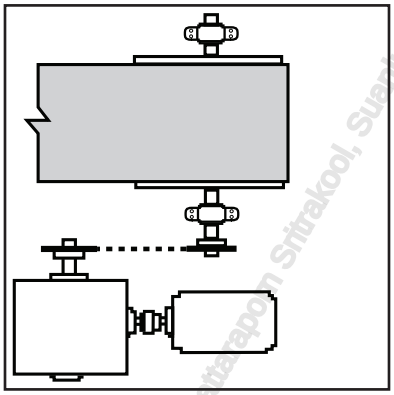

Figure 13.26
Spiral-bevel helical or, worm-gear, speed reducer with chain drive

Spiral-bevel helical speed reducer, or worm-gear speed reducer, coupled to motor and, with chain drive, to drive shaft is a desirable selection for high reduction ratios in the lower power requirements. This drive is slightly less efficient, but has lower initial costs and is most flexible in terms of location.

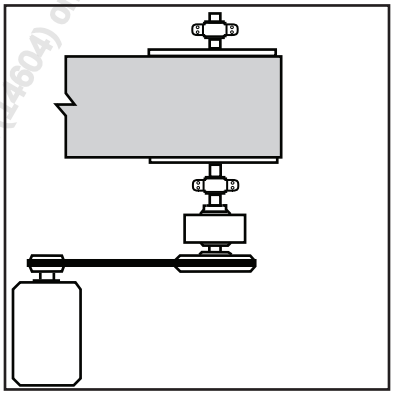

Figure 13.27
Drive-shaft-mounted speed reducer with V-belt drive

Drive-shaft-mounted speed reducer with V-belt reduction from motor: provides low initial cost, flexibility of location, and the possibility of some speed variation and space savings where large speed reduction ratios are not required and where power requirements are not too large.

WWW.CEMENT.ORG has issued this document (24604) on Apr 04, 2011 to Pattarapon Sritrakool, Suanluang, , , Thailand.

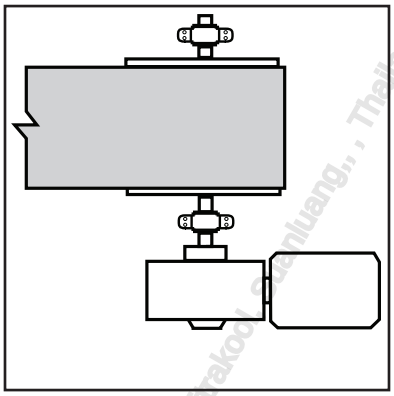

Figure 13.28
Shaft mounted bevel helical speed reducer directly coupled to motor

Drive shaft mounted bevel helical speed reducer directly coupled to motor are desirable for space saving, ease of installation, and reduced structural costs.

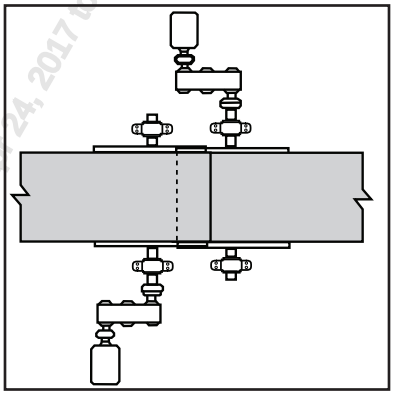

Figure 13.29
Two motor/dual-pulley drive

Two motor/dual-pulley drive coupled to helical, bevel helical or herringbone gear speed reducers are used where power requirements are very large, and where the use of heavy drive equipment may be economical by reducing belt tensions.

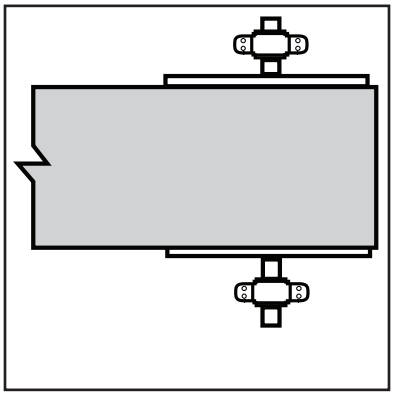

Figure 13.30
Motorized conveyor pulley

WWW.CEMANET.ORG has issued this document (14604) on Apr 24, 2017 to Pattrapon Shtrakool, Chonburi, , , Thailand

A motorized conveyor pulley integrates the motor, speed reducer and bearings inside of a heavy walled pulley tube with direct coupling for high efficiency. Shaft extensions are stationary. All drive components are internal to the pulley for protection, reduced maintenance, ease of installation, space savings and less guarding. With no overhung load support structures can be more economical. Motorized pulleys are generally low to medium power drives.

Selection of the type of speed-reduction mechanism can be determined by preference, cost, power limitations, limitations of the speed-reduction mechanism, limitations of available space, or desirability of drive location. The use of speed reducers in the drives for belt conveyors is almost universal today. However, space-saving considerations and low initial cost sometimes may dictate the use of countershaft drives with guarded gear or chain speed reductions. All of the drives shown can be assembled in either left- or right-hand arrangement.

Alignment Free Drives

An alignment free drive is basically a large bell housing that contains the coupling and gear reduction and provides a standard interface for the flange mounted motor. This type of input saves time and labor during commissioning of the drive as the alignment of the transmission components has already been done.

Drive Efficiencies

To determine the minimum power at the motor, it is necessary to divide the power at the drive shaft by the overall efficiency of the speed reduction machinery. To determine the overall efficiency, the efficiencies of each unit of the drive train are multiplied together. The final product is the overall efficiency. The efficiencies of various speed-reduction mechanisms are listed in Table 13.31.

These efficiencies represent conservative figures for the various types of drive equipment as they apply to belt conveyor usage. They do not necessarily represent the specific efficiencies of the drive units by themselves. Rather, they take into account the possible unforeseen adverse field conditions involving misalignment, uncertain maintenance, and the effects of temperature changes. While there are some variations in efficiency among different manufacturers' products, the data in Table 13.31 generally cover the efficiencies of the various speed-reduction mechanisms.

As an example of the application of the overall drive efficiency, the result of combining equipment unit efficiencies, consider a belt conveyor drive consisting of a double-helical-gear speed reducer and an open-guarded roller chain on cut sprockets. The approximate overall efficiency, according to Table 13.31, is (0.97) × (0.93) = 0.902. If the calculated minimum power at the drive shaft is 13.92 horsepower (10.4 kW), then the required motor horsepower is 13.92/0.902 = 15.43 horsepower (11.5 kW). Therefore, it is necessary to use at least a 20 horsepower (15 kW) motor.

www.CEMANET.com Purchased by Mechanical (1460) on Apr 24, 2017 to Email from Sritrakol (Sritrakol@gmail.com), , Thailand

Type of Speed Reduction Mechanism	Approximate Mechanical Efficiency
V-belts and Sheaves	0.94
Roller chain and cut sprockets, open guarded	0.93
Roller chain and cut sprockets, oil-tight enclosed	0.95
Single reduction helical or herringbone gear speed reducer or gear motor	0.98
Double reduction helical or herringbone gear speed reducer or gear motor	0.97
Triple reduction helical or herringbone gear speed reducer or gear motor	0.95
Double reduction helical gear, shaft mounted speed reducer	0.97
Spiral bevel-helical speed reducer single, double or triple reduction	See Note
Low ratio (up to 20:1 range) helical-worm speed reducers	0.90
Medium ratio (20:1 to 60:1 range) helical-worm speed reducers	0.85
High ratio (60:1 to 100:1 range) helical-worm speed reducers	0.78
Low ratio (up to 20:1 range) worm-gear speed reducers	0.90
Medium ratio (20:1 to 60:1 range) worm-gear speed reducers	0.70
High ratio (60:1 to 100:1 range) worm-gear speed reducers	0.50
Cut gear spurs	0.90
Cast gear spurs	0.85
Note: Efficiencies for bevel-helical speed reducers are slightly less than efficiencies shown for helical gear speed reducers.	

Table 13.31
Mechanical efficiencies of various speed reduction mechanisms

Mechanical Variable Speed Devices

The most common mechanical methods of obtaining variable speeds of belt conveyors are: V-belt drives on variable-pitch diameter sheaves or pulleys, variable-speed transmissions, and variable-speed hydraulic couplings. The choice of these devices depends upon the power and torque to be transmitted, the speed range and accuracy of control required, how well the chosen control works into the system, and the relative initial and maintenance costs.

Creeper Drives

In a climate with low temperatures that cause ice to form on the conveyor belt, with resulting loss in conveyor effectiveness, it is good practice to consider the installation of a creeper drive in connection with the drive equipment. The creeper drive can also be used to provide an effective means for inspecting a conveyor. The creeper drive consists of an auxiliary small motor and drive machinery, which, through a mechanical arrangement, takes over the driving of the empty conveyor at a very slow speed. This creeper drive is arranged to be operative at all times when the conveyor is not handling any load, thus preventing the formation of harmful ice deposits on the conveyor belt. Creeper drives are normally run at about 10 percent of normal belt speed. Lubrication systems may be required for low speed operation.

BACKSTOPS

A loaded inclined belt conveyor of sufficient slope tends to move backwards when forward motion is

www.[illegible] Document (1404) on 04-24-2007 (Printed by [illegible], Thailand

stopped by a cessation or interruption of power or a mechanical failure in the driving machinery. Should the loaded belt move backward, the material would pile up at the tail end of the conveyor. This could impose an extreme safety hazard to personnel near the conveyor, seriously damage the belt and/or drive components, and result in the need to clean up and dispose of tons of spilled material. Use a backstop to prevent this reversal of motion.

Backstops are typically applied to inclined belt conveyors and bucket elevators. Because backstops permit travel of the conveyor only in the forward direction, they cannot be used on reversing conveyors or on declined (regenerative) conveyors. In those cases a brake must be used.

Definition

A shaft mounted backstop (often called a holdback) is a mechanical accessory that allows a conveyor to operate only in the forward direction. It permits free rotation of the drive pulley in the forward direction but automatically prevents rotation of the drive pulley in the opposite direction. Backstops are used on inclined belt conveyors and bucket elevators.

CEMA Recommendation

- When the force required to lift the load vertically on an incline is greater than the least possible combination of the rest of the forces required to move the belt horizontally, a backstop is required. Various combinations of loading on various flights and the low levels friction modifier, R_r, should be used in making this determination.
- Multiple backstop arrangements on a single conveyor require that special arrangements be used as the units will not inherently share the reverse torque imposed on them. Refer to the specific manufacturer for their required service factors or torque sharing arrangements in these types of applications.
- Whenever a single backstop is used in conjunction with a dual drive arrangement or is installed on a non-driven pulley, the slack-side belt tension, T_2, must be checked to determine if it is sufficient to prevent slippage of the belt on the pulley when the backstop is engaged.

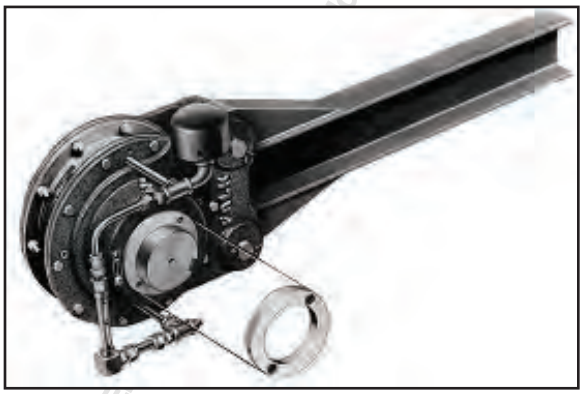

Figure 13.32
Back stop



Figure 13.33
Back stop on conveyor

There are two general types of backstops, high-speed and low-speed. A high-speed backstop is one that is mounted on the high-speed or intermediate shaft of the driving gearbox (speed reducer). A low-speed backstop is one that is mounted directly on a conveyor pulley shaft extension.

High-speed backstops are essentially low-torque, high-speed devices. They are therefore, usually compact and relatively inexpensive compared to a low-speed backstop device. The chief limitation of a high speed backstop is that it does not act directly on the conveyor pulley where the reverse torque and motion originates. A failure of any equipment located after the gearbox shaft that the backstop is mounted on (such as reducer gears, low-speed coupling, or low-speed or intermediate shafts) would receive no protective benefit from a high-speed backstop. Also, the cumulative backlash through the low-speed coupling and gearbox, prior to the engagement of the high-speed backstop means that a small degree of reverse movement takes place. This reverse movement requires a higher restraining force than that of a backlash free system.

Low-speed backstops are high-torque devices designed to fit directly onto a conveyor pulley shaft extension, thus eliminating a number of possible failure points between the conveyor and the backstop. They are also backlash free devices with limited reverse movement. Although low speed backstops provide an increased measure of safety they have greater space requirements and a higher initial cost than high speed backstops. The following summarizes four main types of low-speed backstops that are available.

Sprag Design

Several configurations of this type of backstop exist but all are based on the use of a series of spring energized, specially shaped cams or sprags, positioned between two cylindrical races. During freewheel operation, the sprags tilt to one side, enabling the inner race to rotate freely beneath them, with a sliding action. As the pulley stops and attempts to reverse, the curves on the upper and lower faces of the sprags cause an immediate and backlash free wedging action between the inner and outer races, thus, preventing runback.

Single Ramp and Multiple Roller Design

This backstop design consists of a drum that rotates between a pair of side arms, a series of short floating rollers in line across the drum width, and a ramp mounted at an angle to the drum and fixed to the side arms. The rollers are free to rotate in the freewheeling mode, but wedge themselves between the drum and ramp when the unit tries to reverse. Gravity keeps the rollers in contact with the drum and the ramp at all times eliminating any backlash.

Individually Spring-Loaded Roller and Ramp Design

This backstop design consists of a rotating inner race with a series of ramps or cams machined around its periphery, a series of individually spring-load pistons pressing against independent cylindrical rollers, and a cylindrical outer race which is connected to a torque arm. During freewheeling, the rollers rotate with a sliding action against the inner race and a rolling action on the outer race. During backstopping, the rollers instantly wedge between the inner and outer races to prevent reverse rotation. The spring-loaded pistons push the rollers outward maintaining contact between the rollers and the inner and outer races, thereby eliminating backlash.

Roller Cage and Ramp Design

This design differs from the previously described multiple roller/ramp type in that it uses a single spring-loaded cage to position the rollers on the inner cam ramps. The rollers, roller cage and stop lugs rotate with the inner cam as a unit since they are connected by the energizing springs. The outer race does not rotate since it is bolted to the end covers that are held by the backstop torque arm. While overrunning, the rollers roll on the outer race and slide on the inner cam ramps. As the rotating shaft stops and attempts

www.CEMAnet.org (Issued with the Agreement dated 2004) on Apr 21 2010 Patterapon Sirikul, Suandusit Rajabhat University

to reverse, the inner cam is instantly stopped by the wedging action of the rollers in the annular opening between the cam ramps and outer race.

Pawl and Ratchet Design

A typical pawl and ratchet hold-back device allows the pawl to move over the ratchet in one direction and engaged in the teeth of the ratchet wheel in the opposite direction. The ratchet wheel is mounted to the drive pulley shaft and the pawl shaft is fixed to the conveyor belt structure.

Determining the Need and Capacity of Backstop, Inclined Conveyors

When the force required to lift the load vertically on an incline is greater than the least possible combination of the rest of the forces required to move the belt horizontally, a backstop is required.

Because a backstop is a safety device, it is important that the friction forces that help it resist the reverse motion of the conveyor are not overestimated. For simple inclined conveyors, the lift tension ΔT_{Hn} can be simply compared to the minimum possible total of the other ΔT sources. For more complicated, multi flight conveyors, the range of possible loading on various flights use a lower value of Modifying Factor R_r. When multiple drive locations are used and separated by several hundred feet, each may be equipped with its own backstop so that T_2 and shaft size issues do not cause problems. In this case, backstop decision and sizing should apply to each drive location for all of the flights downstream of it until the next drive. Active braking is preferable to backstops for long undulating conveyors.

Backstops are rated on the basis of the reverse torque they can safely withstand. The backstop torque rating should be no less than the maximum breakdown or stalled torque of the drive motor, because during an aborted start, or a jam that occurs during running, the full breakdown or stalled torque of the drives can be applied to the belt and stored as belt stretch. This causes an extremely high tight-side tension in the belt that in turn imposes very high reverse torque on the backstop when it engages. As the backstop is a safety device, it must be able to resist the worst case loading it will experience.

To calculate torque when power and rpm are known, use the formula:

$$T_{bn} = \frac{SF \times (P_{dn} \times CF)}{N_n} \quad \text{[ft-lbf (N-m)]}$$

Equation 13.34
T_{bn}, Backstop torque

Where:

T_{bn} = Backstop torque [ft-lbf (N-m)]
P_{dn} = Total system power at drive location [HP (kw)]
N_n = Backstop pulley rotational speed (rpm)
SF = Backstop service factor per Table 13.36
CF = Conversion factor: Imperial units = $5{,}250\frac{Hp}{rpm}$, metric units = $9{,}550\frac{kW}{rpm}$

WWW.CEMANET.ORG has issued this document (14490) on Apr 22 2014 to Phutrapol Chitrakorn (Suantong), Thailand

Maximum Motor Breakdown or Stall Torque	SF (Service Factor)
≤ 175%	1.0
200%	1.15
225%	1.30
250%	1.50

Table 13.35
Service factors for backstops power method

The above service factors are a guideline; refer to the specific manufacturer for their required service factor. Often torque limiting devices are used on drives. In these cases, the limiting torque value may be used in determining the appropriate service factor in the above method. Refer to the specific manufacturer for the required service factor.

BRAKES

The brakes used in belt conveyor control operate on the principle that the braking surfaces are engaged by springs and disengaged either by a magnet or by hydraulic pressure induced by an electric motor-hydraulic pump combination. These two types generally are classified by the method of disengaging the braking surfaces. Eddy-current brakes are also used for deceleration. Practically all conveyors involving lift or lowering need, in addition to the braking force, a holding action after the conveyor has come to a standstill, for safety. In the case of an inclined conveyor, this holding action could be provided by a backstop. However, for any declined conveyor, there is an obvious need for some device that permits application of a controlled torque to decelerate the load at a reasonable reduction in the rate of speed, yet allows sufficient holding power to keep the conveyor belt securely at a standstill when fully loaded but not in operation. Any conveyor which, under some condition of loading, is regenerative must, for purposes of deceleration analysis and holding power of the brake, be considered as a declined conveyor.

Mechanical Friction Brakes

The mechanical friction brakes are commonly operated electrically. For safety reasons (power failure) such brakes should be spring-set, and power-released. These mechanical friction brakes provide both the necessary decelerating torque and final holding action. They are interconnected electrically with the motor such that when the power to the motor is off, the holding coil, on the brake also is de-energized, thus allowing a spring to set the brake. For this reason, these brakes are "fail-safe."

The designer should bear in mind, though, that a friction brake is not a precision device, because of the inherently disadvantageous properties of brake linings. The coefficient of friction of brake lining, and with it the actual braking torque, is affected by temperature, humidity, and the degree to which the lining has become worn.

Eddy-Current Brakes

Eddy-current brakes produce a dynamic braking torque by means of a smooth drum that rotates in a magnetic field produced by a stationary field coil. Eddy-currents are generated in the surface of the drum as it rotates. A magnetic attraction between these eddy currents and the poles of the field assembly produces a braking torque on the drum. This torque varies directly with the field current and the speed of the drum. It can be adjusted in a stepless manner by a control system. For holding action, because the eddy-current brake is not effective in case of power failure, it should be combined with an auxiliary

www.EMAP.co has sent this document (1.pdf) on Apr 24, 2014 to Pitterapom Sribunpot, Suanluang, , Thailand

mechanical friction brake. As an eddy-current brake drum slows down, the torque that it is capable of exerting diminishes and is zero when the drum ceases to rotate. Thus, an eddy-current brake cannot be expected to hold a conveyor belt in a standstill position. The auxiliary friction brake also serves to decelerate the conveyor in case of power failure. Deceleration can also be achieved within the drive motor and its control. There are three basic ways of achieving this braking action, none of which provides holding power after the conveyor belt has come to rest. For this reason, some type of auxiliary external brake is always needed to hold the conveyor belt at a standstill.

Plugging The Motor

Here, the current is reversed and counter torque is developed. This force attempts to rotate the motor in a direction opposite to the existing motion. The energy is dissipated as heat. The motor must be de-energized when zero speed is reached; otherwise the motor will attempt to accelerate in the reverse direction. Among others, squirrel-cage motors are most suitable for this application. There is no holding effect at zero speed and the electrical power losses during plugging are high.

Dynamic Braking

Dynamic braking is a system of electric braking in which motors are used as generators and the kinetic energy of the load is employed as the actuating means of exerting a retarding force. To dynamic brake AC motors, it is necessary to provide a source of D.C. excitation during the braking period. The control is so arranged that when the stop button is depressed and the AC line contactor is opened, another contactor closes to connect the D.C. excitation to one phase of the motor primary. The motor now acts as a generator and is loaded by the induced current flowing through its squirrel-cage winding. The braking torque, which varies in proportion to the exciting current, rapidly increases as the motor slows down but then decreases at near zero speed. The braking torque disappears near zero speed and there is no holding effect at zero speed.

Regenerative Braking

Squirrel-cage motors operating above synchronous speed have inherent retarding torque characteristics. This retarding condition, known as regenerative braking, is applicable above the synchronous speed of the motor (or for multi-speed motors above their synchronous speeds). The energy generated by the motor flows back into the electric power line. Care must be taken to insure that the electric power system is capable of absorbing the power generated by the motor. This fundamental type of braking is found to be especially useful for declined conveyors operating at a speed that drives the motor at its synchronous speed, plus slip.

BRAKES AND BACKSTOPS IN COMBINATION

Often a brake is used to control the stopping interval on an inclined conveyor. If the conveyor is a large and important one, which may reverse and run backward in the event of a mechanical failure, prudence dictates the use of a mechanical backstop as a safety precaution, in addition to the electrically operated brake. Friction surfaces on brakes, and brakes used as backstops, do not develop the design friction factors until the braking surfaces have worn in to effect full contact. Therefore, friction brakes used as such or as backstops must be adjusted to compensate for this "wearing in" process.

www.EEAA.ORG has a licensed agreement (1460) on UP 2017 to Patarapol Sirisrisakul, Suanluang, , TH Mode

Restraint Of Declined Conveyors

Declined conveyors of the regenerative type, are restrained in normal operation by the drive motor which acts as a generator, when the belt and its load force the motor to rotate faster than its synchronous speed. The motor may fail to restrain the belt and load when it is forced to a speed where its current output is excessive and the overload protective device breaks the circuit. Proper selection of the motor and controls will avoid this contingency. Nevertheless, a brake must be supplied, one which will set when the power circuit is broken.

A centrifugal switch is often used on declined belt conveyors to open the electrical control circuit at a predetermined over-speed, and thus to set the brake. This will act as a safety against mechanical failure in the drive machinery. A brake is usually located at the tail end of a declined conveyor.

Backstop And Brake Recommendations

Table 13.36 lists recommendations for the use of backstops and brakes on horizontal, inclined, and declined conveyors. Brakes are a necessity on declined conveyors so that the loaded belt may be stopped without excessive or runaway coasting. Brakes are also applied to horizontal and inclined belt conveyors for the same reason. Excessive coasting may discharge far more material than the succeeding conveyor or other units can handle. Mathematical calculation and the careful selection of a properly sized brake will eliminate such difficulties.

Type of Conveyor	Backstop	Brake	Forces to be Controlled
Horizontal	Not Required	Required when coasting of belt and load is not allowable or needs to be controlled	Decelerating force minus resisting friction forces
Inclined	Required if power of lift ≥ power of system friction	Not usually required unless preferred over backstop	In line load tension minus restricting friction forces
Decline	Not Required	Required	Decelerating force plus incline load tension minus resisting friction

Table 13.36
Backstop and brake recommendations

CAUTION:
Brakes and backstops should never be used as the only method of holding a belt during maintenance or cleaning. If working on a belt at or near pinch points make sure the potential energy of the belt and load has been neutralized with belt clamps or other suitable means.

DEVICES FOR ACCELERATION, DECELERATION, AND TORQUE CONTROL

Starting the Conveyor

Smooth starting of a conveyor belt is important. It can be accomplished by the use of torque-control equipment, either mechanical or electrical, or a combination of the two. The belt conveyor designer should investigate acceleration stresses of conveyor components to insure that the overall stresses remain within safe limits. Smooth starting can be an important consideration, where excess power may have been installed to provide for future increased capacity or for future extensions of the conveyor. In cases of

www.SMACT.ORG is issued this document (1604) on Apr 24, 2017 to Prateek Srivastava, Syenlubes, Kanpur

conveyors having vertical curves or trippers, too rapid a start may cause excessive lifting of the belt from the idlers. This would necessitate a provision for gradual acceleration of the conveyor belt.

Controlled Acceleration

Acceleration can be controlled by several types of electrical devices in addition to Variable Frequency Drives (VFDs).

Wound-Rotor Motors with Step Starting

By the addition of external resistance in the secondary winding, electrically accessible through slip rings, starting torque can be controlled by planned steps. This allows a program designed to suit the particular conveyor, and overcome the problems of excessive belt tension, shape of the vertical curves, and other problems that are solved by starting time control. This type of electrical control device has been widely used for many years on large belt conveyor systems.

Squirrel-Cage Induction Motor with Autotransformer

Another method of controlling the torque, and with it the acceleration time, is the use of an induction motor (normal or high-torque) with autotransformer starting. Its use must be checked because the low starting torque caused by the reduced voltage may not be enough to overcome the breakaway static friction in level or inclined conveyors.

Eddy-Current Couplings

These are electromagnetic devices composed of three basic parts: a rotor made up of multiple pole pieces (and secured to one shaft), a hollow iron cylinder or drum that surrounds the rotor (and is secured to the other shaft), and a stationary electromagnetic coil that surrounds both rotor and drum and provides the magnetic field in which they operate.

The electromagnetic coil is energized by a low-power, direct current supply. When either the rotor or the drum is rotated, eddy currents are induced. These eddy currents set up a secondary field and thus create a torque between the rotor and drum. The driven or output member never attains the same speed as the driving or input member. This inherent difference in speed is called "slip." The slip loss appears as heat, which must be dissipated by air or water cooling.

In a conveyor drive, the eddy-current coupling is placed between the squirrel cage motor and speed reducer, on the motor shaft, and on the speed reducer input shaft. Because the degree of excitation of the coil determines the slip between the driving and driven members, therefore Eddy-Current couplings provide an ideal means of controlled acceleration. Excitation of the coil can be increased over a definite time period, or it can be made responsive to tachometer feedback speed-regulating control. Sophisticated electronic control can be employed to regulate the coil excitation to produce virtually any desired result.

There are several advantages of eddy-current couplings.

- They require low- power coil excitation.
- They permit smooth, controlled starting.
- The motor can be started and accelerated without connecting the load. On frequent start and stop applications the motor can run continuously.
- Variable speed can be obtained. However, in variable speed applications the additional slip creates more heat that must be dissipated.

Thailand Siamchai Srianluang, Chaiyapom Tirapongpaiboon Issued to: Document(1966) on Apr 24, 2017 for Pacific Crane

- They make possible the use of squirrel-cage motors and across-the-line starters.
- A modified eddy-current coupling can be used as a decelerating brake (not as a "holding brake," however).

The disadvantages of eddy-current couplings are:

- They require additional drive space.
- Water cooling must be provided for the larger sizes.
- Generally, they are more expensive than a wound-rotor motor and reduced-voltage starting.

Fluid Couplings

These are mechanical two-piece mechanisms consisting of an impeller and a runner, both within a housing filled with oil. The impeller is connected to the driving shaft; the runner is connected to the driven shaft. In conveyor drives, the fluid coupling usually is placed between the motor and speed reducer. When the impeller is revolved, the oil is accelerated to the periphery and passes to the blades of the runner, producing a torque on the runner proportional to the weight and rate of fluid flow. The fluid coupling basically is a slip clutch and, as with an eddy current coupling, the slip loss appears as heat. Unlike its electrical counterpart, a fluid coupling is not used as a variable-speed device.

When properly applied, a fluid coupling can produce reasonably smooth acceleration of high-inertia loads. The motor speed rises rapidly to a point near the maximum torque condition before the load is engaged. This makes the standard squirrel-cage motor an ideal driver, as its peak torque is about 200 percent of full-load torque. The fluid coupling permits the use of squirrel-cage motors with across-the-line starters.

Fluid couplings also provide an excellent solution to voltage drop problems by allowing the motor to achieve full speed before it experiences load. In addition, fluid couplings limit belt forces imparted due to higher voltage at start-up, thus preventing belt slippage.

Variable-Speed Hydraulic Couplings

These devices have been used very successfully worldwide. The variable-speed hydraulic coupling consists of a fluid coupling with input and output shafts, heat exchanger, charging oil pump, and associated control. The amount of oil in the coupling is variable by the position of an adjustable scoop tube. The control can be manual or completely automatic. Speed variations over a 4:1 range are possible. The device allows the AC motor to start under no load. The torque buildup starts at zero and the buildup can be controlled over an extended time. Smooth acceleration times up to 200 seconds are achievable. The device can also act as a clutch without AC motor shutdown.

Dry Fluid Couplings

These are similar to oil-filled fluid couplings, except that they consist of a housing that is keyed to the motor shaft and a rotor that is connected to the load. The housing contains a charge of steel shot instead of a fluid. When the motor is started, centrifugal force throws the charge of steel shot to the inner periphery of the housing, where it packs around the rotor. Some slippage takes place before the housing and rotor are finally locked together however, one at full speed they are 100% efficient. Power thus is transmitted from the motor to the load. The amount of the charge of steel shot determines the torque during acceleration. It can also determine the torque-limiting feature of this coupling.

www.SOMANUALS.com. This Document is Licensed (1960) on Apr 2, 2017 to Rabbit Pool, Suanluang, , Thailand

Miscellaneous Fluid Couplings

These are similar to dry fluid couplings except, in lieu of a charge of steel shot; these fluid couplings employ silicone fluid or other environmentally suitable or magnetic liquids. Characteristics of these couplings are such that manufacturers should be consulted for specific performance details before an application is made.

Centrifugal Clutch Couplings

These consist of a driving hub, a driven sleeve or drum, and a series of shoes connected to or driven by the hub. The periphery of each shoe is provided with a brake- lining material. The hub is carried by the driving shaft, the drum by the driven shaft. When the hub rotates, centrifugal force impels the shoes outward against the inside of the drum, to transmit power to the load. Slippage occurs, which produces the effect of smooth starting.

Flywheel

Mechanical control of starting and stopping can be accomplished by means of a flywheel, which adds to the WK^2 of the prime mover, thus increasing the starting time and limiting the torque input to the belt conveyor system, as well as increasing stopping time and distance.

Mechanical Clutches

This device can effectively control starting torque; it allows adjustment of the amount of torque, as well as the rate at which it is applied. The mechanical clutch can be preset for both rate of application and maximum limit.

BRAKE HEAT ABSORPTION CAPACITY

The discussions above relate to the selection of a brake on the basis of torque only. Stopping a moving mass involves the absorption of the kinetic energy of the belt, the load, and the moving machinery. This energy only can be dissipated in the form of heat at the brake. The resulting temperature rise of the brake elements must not damage the brake. For this reason, a discussion of brake design and brake heat absorption follows.

Industrial brake linings usually are made of either woven or molded material, plus various fillers or adhesives. The coefficient of friction of these linings against a brake wheel varies considerably with different ambient conditions. Because of the nature of these variations, definite values of the friction coefficient cannot be given. Nevertheless, some variations that can be expected are approximated below. Coefficients, and consequently torque values, may vary widely for new linings and/or new wheels, until both lining and wheel surfaces are worn in. This requires approximately 4,000 to 6,000 full-torque brake-setting operations. During this period static torque may drop as much as 30% below the initial setting, and dynamic torque as much as 50%. For this reason, the discussion will relate only to well-worn-in linings and wheels.

Both static and dynamic torque varies with wheel surface temperatures. At 50 °C to 75 °C (122 to 167 °F), the static torque may be as much as 30 percent to 35 percent high. But it then drops off rather rapidly with increase in wheel temperature. At 115 °C to 135 °C (139 to 275 °F), the static torque is about normal. At 150 °C (302 °F), it may be 5% to 7% below normal. The dynamic torque may be 10 percent to 15 percent high at 40 °C to 60 °C (104 to 140 °F), and then rise rapidly; until at 115 °C to 150 °C (139 to 302 °F) it may be as high as 140 percent. It then drops off rather rapidly with further temperature rise.

www.CEMAT.RU Published this document (604) on Apr 24, 2017 to Nuttaraporn Smitkeo Sisanluang, , Thailand

Because of these variations, brake wheels are rated at 120 °C (248 °F) rise for normal energy dissipations. The ratings, which are expressed in "hp seconds," are based on a maximum temperature rise of 120 °C (248 °F) at the brake wheel, when the brake is applied at the listed time intervals. The brakes have lower ratings for more frequent stops because they will not cool sufficiently between stops to absorb the heat of rapidly repeated stopping.

Humidity will also have an adverse effect on braking torque because industrial brake linings absorb moisture. If a brake is allowed to stand inoperative for some time in high ambient humidity, the braking torque may be reduced as much as 30% when the brake is first set. This condition is self-correcting, because the heat generated in braking rapidly drives off the moisture. Usually the torque will be restored to almost normal at the end of the first braking cycle. In this case, the only effect is a longer time than usual to make the first stop. Variations in any given lining material, and in surface conditions of the lining and wheel, may result in a 10 percent plus or minus variation in torque during successive stops.

From the above factors, it is evident that industrial brakes are not precision devices. The normal method of setting brake torque by measuring either spring length or adjusting-bolt length is at best an approximation. Where braking effects are important to a conveyor operation, the brake should be readjusted for optimum braking by actually stopping and holding the load after the brake first is installed. For critical conveyor applications, it may be necessary to readjust the brake more than one time during the break-in period for new linings.

CONVEYOR BELT CONTROLS

The belt conveyor system requires control systems. The control system architecture is composed of a subset of the drive type controller and the belt control system. The drive type controller provides for the starting, running, and stopping speeds and torque control of the drive type. The belt control system issues run and stop commands to the drive controller. The belt control system provides for belt protection controls, interlocking, telemetry, and human-machine interface (HMI).

Drive Type Controller

Each drive type requires a controller for starting, running, and stopping. This may be a simple line voltage contactor for the full voltage, across the line starting with direct coupling or fixed fill fluid coupling conveyor drive. This may involve several electrical contactors and devices in the case of wound rotor induction motor drives. This controller may involve complex electronic power controllers in DC drives or variable frequency drives. The controller may involve the sequencing of support systems such as the scoop tube actuator in variable fill fluid drives or fluid circulating or cooling systems. Some controllers are involved in only starting. Others must support drive functions for variable speed operation and ramped stopping. The conveyor designer should identify and separate the drive type controller from the general belt control system.

Starting and Stopping Control Algorithms

Each drive type controller carries out a control algorithm for starting the conveyor. The most common type of control used on smaller to medium sized drives with simple profiles is termed "open loop acceleration control." In open loop, the control system is previously configured to sequence the starting mechanism in a prescribed manner, usually based on time. In open loop control, drive operating parameters such as current, torque, or speed do not influence sequence operation. This method presumes that the control designer has adequately modeled drive system performance on the conveyor. For larger

www.EEMANUAL.COM Engineering Document (SEAMEC) Apr 24, 2017 10:08pm Sankalp Gurjar, , TIMKEN

or more complex belts, "closed loop" or "feedback" control may be used. In closed loop control, during starting the control system monitors via sensors such drive-operating parameters as the current level of the motor, the speed of the belt, force on the belt, or the torque arm reaction loads, and modifies the starting sequence to control, limit, or optimize one or more parameters. Closed loop control systems modify the starting applied force between an empty and fully loaded conveyor.

Many control systems allow the drive to self calibrate or learn the characteristics of the motor and modify the control algorithm automatically. The constants in the mathematical model related to the measured variable versus the system drive response are termed the tuning constants. These constants must be properly adjusted for successful application to each conveyor. The most common schemes for closed loop control of conveyor starts are tachometer feedback for speed control and load cell force or drive force feedback for torque control. On some complex systems, it is desirable to have the closed loop control system adjust itself for various encountered conveyor conditions. This is called "adaptive control." These extremes can involve vast variations in loadings, temperature of the belting, location of the loading on the profile, or multiple drive options on the conveyor.

There are three common adaptive methods. The first involves decisions made before the start, or "pre-start conditioning." If the control system could know that the belt is empty, it would reduce initial force and lengthen the application of acceleration force to full speed. If the belt is loaded, the control system would apply pre-tension forces under stall for less time and supply sufficient torque to adequately accelerate the belt in a timely manner. Since the belt only was loaded during previous running by loading the drive, the average drive current can be sampled when running and retained in a first-in-first-out (FIFO) buffer memory that reflects the belt conveyance time. Then at shutdown the FIFO average may be used to precondition some open loop and closed loop set points for the next start. The second method involves decisions based on drive observations that occur during initial starting or "motion proving." This usually involves comparing the time of the drive current or force against the belt speed. If the drive current or force required early in the sequence is low and motion is initiated, the belt must be unloaded. If the drive current or force required is high and motion is slow in starting, the conveyor must be loaded. This decision can be divided into zones and used to modify the middle and finish of the start sequence control. The third method involves a comparison of the belt speed versus time for this start against historical limits of belt acceleration, or "acceleration envelope monitoring." At start, the belt speed is measured versus time. This is compared with two limiting belt speed curves retained in control system memory. The first curve profiles the empty belt when accelerated, and the second one profiles the fully loaded belt. Thus, if the current speed versus time is lower than the loaded profile, it may suggest that the belt is overloaded, impeded, or that there is a drive malfunction. If the current speed versus time is higher than the empty profile, it may suggest a broken belt, coupling, or a drive malfunction. In either case, the current start is aborted and an alarm is sent.

BELT PROTECTION CONTROLS

The belt conveyor is provided with various devices and systems for protecting the system. These devices are used as run-permissive input commands to the general belt control system.

Belt Alignment

It is important that the belt stay aligned with the drive pulleys, and the carrying and return idlers. Belt alignment sensors are typically positioned along the edges of the conveyor belt. They are usually at the discharge and at the loading zones of the conveyor, but can be distributed along the conveyor at intervals. Switches consist of roller switches, limit switches, whisker switches, proximity switches, or photoelectric

www.conveyorsolutions.com (2014) © All rights reserved. Copyright Siriphol Phetpaporn Siriphol Phetpaporn, , Thailand

switches. When the edge of the belt trips the alignment switch for a timed period, the conveyor is halted. There is provision for running the conveyor in local "jog" to realign the conveyor fabric. An adaptation of alignment sensors for large steel cord belts is the continuous measurement of edge displacement, termed "edge tracking." Edge tracking in steel cable belts provides an indication of tension distribution within the carcass among the support cables. Upon installation, each steel cable belt will exhibit an edge tracking signature for a belt revolution. A deviation in the edge tracking displacement at a later time suggests a problem with the belt cable tension distribution.

Belt Overload

The belt conveyor system is protected from overload by the motor overload of the electric drive motor(s) or by preset current limits in the controller. The motor overload can be a simple bimetallic or melting eutectic alloy, or a complex computer-based motor thermal model. A belt loading "sail or paddle" switch can sense a belt overload at a specific point. Complex belt systems are sometimes protected from overload by belt weigh scales that measure the belt loading at a point. Or, a non-contact belt profile sensor, such as an ultrasonic, radar, laser, or video device can measure the belt loading depth. Based on an assumed material density, the loading tons per hour can be projected.

Belt Slip

Belt slip is the loss in traction of the drive pulley(s) to the belt cover. Belt slip can destroy a belt or drive pulley. Belt slip protection provides a belt drive speed sensor that compares the present belt speed with the belt intended speed. For constant speed belts this normally consists of a zero speed switch with a set point that trips the conveyor drive when the belt speed is below 80 percent of full speed. The zero speed switch is bypassed during starting and stopping. For variable speed conveyors, the belt slip consists of a speed sensor that measures belt speed and compares with the speed reference sent to the drive system. When the belt speed is below 80 percent of the intended speed, the drive is tripped. This type of belt slip is active during starting, running, and stopping. In multiple pulley adjacent drives, tachometers are sometimes provided for each drive motor. The tachometer signals are compared with the resultant normalized belt speed to sense slippage of one of the multiple drive pulleys. A method to adjust and test belt slip is normally provided in the belt control system.

Takeup Over-travel

Over-travel limit switches can be placed at the far extremes of the counterweight or takeup device travel. In a gravity counterweight takeup, the top over-travel switch trip may suggest a jammed conveyor fabric condition. A bottom over-travel switch may indicate belt stretch, or a broken belt fabric flight. Excessive takeup motion during starting and stopping indicates an inadequate or malfunctioning drive type control.

Transfer Chute Plug

A plugged chute device provides belt protection at the discharge of the conveyor into a transfer chute. Blocked flow can result in damage to the driven conveyor. Plugged chute switches are used in many configurations depended on the application. Actuation of the plugged chute switch with time delay normally results in the tripping of the conveyor drive.

www.CRANESTOP.com Posted to this document on 12/2/2017 to Paul Pan Shaoqi, Suanluang, Thailand

Bin Level

When conveyors discharge into bins or hoppers, bin level sensors provide protection to the belt. These can consist of simple hanging tilt switches, capacitance probes or sidewall plates, rotating paddle wheel or analog measurement devices such as ultrasonic, radar, or laser devices.

Pullcord Stations

Pullcord stations are distributed stop switches with latching provisions which are installed along the length of the conveyor. They should be provided on all unprotected conveyors where access is possible, or as required by local regulation. They can be located along the conveyor at intervals and interconnected with a colored pull wire. An operator activates the switch by pulling the pullcord until the switch trips, normally raising a visual indicator flag. The switch remains tripped until reset manually at the switch location. Tripping of the pullcord stops the conveyor drive. The belt should not restart on reset of the pullcord. Tripping of the pullcord is a control stop, and should not be considered a "lockout" of the conveyor power source.

Rip Detectors

Rip detectors provide belt protection in the case of a rip or tear in the belt fabric. Simple rip detectors are usually spill switches located below the center of the belt near the point of belt loading. Complex belt rip detectors on larger belts involve the embedding of antennas with the belt construction. If the antenna is cut by a rip, signal sources and detectors located along the edge of the belt detect a broken antenna and shutdown the belt. Complex belt rip detection systems require periodic maintenance.

Fire Detection

Some belts that carry combustible materials are provided with fire detection protection systems. These systems can consist of point or distributed thermal trip switches located above the belt fabric, smoke sensors, carbon monoxide sensors, or fiber optic temperature sensors.

Dust Sprays

Some belts that carry dusty material are provided with water or chemical-based dust suppression systems. These systems spray the belt material at selected transfer and belt loading point. Some systems spray a constant amount of suppression per unit time and some vary the application with the loading of the belt. The dust sprays are turned off when the belt is idle or unloaded to prevent puddling, waste, and slippage.

Belt Control

Belt control normally consists of the net sum of the belt permissives, the operator start/stop station(s), the start warning system, interlock, sequencing of individual conveyors, and other process controls. Belt control issues a run command to the drive type controller. Sometimes, the belt control issues a running reference speed to the drive type controller. For stopping, the belt control simply removes the positive run signal to the drive type controller or initiates a ramped stop command.

Stop/Start

A belt conveyor system is normally provided with one or more control stations for operators. Start stations normally require a momentary operator input to initiate a start sequence. Stop stations normally monitor a maintained input for a run permissive. Jog stations are special start stations that allow the conveyor to

www.EEHandbook.com has purchased this document (31604) on April 04, 2017 to Pattarapon Sutanthavibul, Songkhla, , Thailand

run only when the operator stays at the jog station and continually commands the jog function. Some complex belts have many operator stations distributed at various physical locations. Again, a stop/start station is a control device and should not be considered a "lockout" of the conveyor power source.

Start Warning

All unguarded conveyors should be equipped with an audible or visual system that provides a pre-start warning along the entire length of the conveyor. These normally consist of horns, sirens, flashing lights, or strobes. These are activated for a period after a start is requested but before initiating motion of the conveyor.

Interlock

Classically, interlock is the run permissive for the conveyor to any other unit's run status. Interlock is the control relationship between adjacent material transferring or interdependent machines. Interlock proceeds through a system in the reverse order of material flow. For example, a belt conveyor named "A" transfers material to another belt conveyor named "B." A is interlocked to B. If B shuts down, A must shut down. Interlock then flows from B to A. Running a belt "out of interlock" or "in bypass" are common terms for maintenance operation of a conveyor with the interlock system disabled or defeated. Interlock can be performed by physically wiring the conveyor control systems together, by computer coding interlock, by providing a motion sensing switch on the tail of conveyor B and sensing that as a run permissive for conveyor A, or by telemetry signaling from one conveyor to the next over a distance. A conveyor may be interlocked to other machinery and devices such as screens, breakers, crushers, or magnets.

Telemetry

Telemetry is the distribution of belt control and informational signals over significant distances. Since conveyors transport material over wide areas, some belts require signal telemetry. Signal telemetry can be simply multi-conductor cables with DC digital on/off control. Signal telemetry can involve the multiplex of more than one signal over a single wire path. Today, telemetry may involve the conversion of electrical signals to computer-based serial transmission of data, to light signals run over fiber optics, or to wireless radio transmission. Control, remote operator interface, and conveyor monitoring can be distributed geographically away from the physical conveyor location using conventional wired telephone networks or newer wireless modem technology.

Lockout

Lockout of a belt conveyor is the physical lockout of all motive power sources to the conveyor and stored energy so that people may access the conveyor equipment for service, inspection, clean-up, or maintenance. Lockout implies security supervision of the lockout elements. Lockout involves all sources of power including electrical, hydraulic, pneumatic, or potential energy. Each drive type and conveyor system will require an assessment of lockout requirements. Lockout equipment or apparatus may be required to comply with owner practices and policies, manufacturer's recommendations, and regulatory requirements. The lockout system must be interfaced with the belt control system. Lockout/Tagout terminology is often used to describe procedures where the power source is locked out with each person working on the conveyor places an individual uniquely keyed lock on the power source so the conveyor can not be started until all locks are removed. In addition to Lockout/Tagout it is critical to block all potential energy sources including stretch of the belt and to test the conveyor control to make sure it won't start.

www.CRAFTCR...hes is strictly prohibited (14604) on Apr 2... 2017 © Patarapon Chitrakool, Siam Cog., , Thailand

BELT CONTROL APPARATUS

Each belt control system is supported by a control apparatus. Traditional industrial control depends on relays, timers, counters, and discrete input devices such as push buttons and selectors. Today, most belt conveyor systems use some form of computer control. Each belt control system communicates with the operators and attendants through a system of human-machine interface (HMI).

Computer-Based Control

Computer-based control implies real time control by a microprocessor-based system with an input section, a processing section, and an output section. Examples of computer-based control for belt conveyors include programmable logic controllers (PLC), distributed control systems (DCS), personal computers (PC), and single board custom micro controllers. In industrial domains, the PLC is the most common control platform. Computer control provides a programming logic environment where individual changes and features may be set up to match each conveyor's application needs. Computer control is robust, reliable, cost effective, and flexible. The input sensors are the conveyor and equipment protection switches and transducers. Inputs are digital or analog. Examples of digital inputs are belt alignment or chute plug switches. Digital inputs have two conditions, "on" and "off." Digital inputs are normally powered by some low level power source such as 120 VAC or 24 VDC. Examples of analog inputs are belt motor currents, bearing temperatures, vibration, bin levels, and hydraulic pressure. Analog transducers measure some physical property and convert the measurement to a linear electrical input range. Common analog input signals are 4-20 ma, 1-5 VDC, and 0-10 VDC. The processing section of the computer control evaluates the inputs, applies the control logic, rules, and algorithms, and controls the output section. The processing section also supports serial communication to programming terminals, data highways, networks, and printers.

The output devices are the action elements controlled by the belt control system. Outputs are digital or analog. Digital outputs are normally powered by low voltage AC or DC of common control ranges. Examples of digital outputs devices are starters, relays, lights, horns, solenoids, and valves. Analog output devices take an electrical analog signal and provide some proportional physical action. Examples are valve positioners, gate actuators, belt speed control devices, and feeder rate controls. Computer control systems support local input/output (i/o) and remote i/o. Local i/o is located with the processing unit and remote i/o is distributed up to several miles from the processing unit. Remote i/o communicates with the processing unit over some serial multiplex telemetry method unique to each computer control. The computer control can communicate with other conveyor computer control systems via serial data links, data highways, or local area networks.

Human-Machine Interface

The human-machine interface (HMI) is the sum total of the devices that communicate information to the belt system operators, attendants, service staff, and management. Examples of low level HMI include pilot lights, horns, counters, ammeters, voltmeters. Low level HMI communicate with the control system via discrete i/o. Examples of mid-level HMI include alphanumeric text displays, voice synthesizers, keypads, and small LCD screen displays. Mid-level HMI communicate with the control system via discrete i/o, binary or BCD parallel ports, or serial data. Larger HMI stations included CRT, flat screen TFT, or gas plasma graphic terminals with operator input via keyboard, membrane operator panels, bezel arrangements, and touch screens. Larger HMI stations are controlled by computers and communicate with the control PLC via serial or local area network protocols. HMI terminals can provide status information, allow for operator input, display alarm messages in the order of occurrence with date and time, display trends, and log information to permanent storage. HMI terminals may be located some

www.CEMAnet.org has licensed this document (v1.0.04) on 4/12/2021 for personal use only. (c) Shenluang, Shenluang

distance away from the belt conveyor. The cost of higher level HMI is decreasing. The packaging options are increasing. User configuration is becoming friendly.

CONCLUSION

The best belt drive system is one that provides acceptable performance under all belt load conditions at a reasonable cost with high reliability. No one drive system meets all needs. The belt designer must define the drive system attributes required for each belt. In general, the AC induction motor with full voltage starting is confined to small belts with simple profiles. The AC induction motor with a VFD or fixed fill fluid coupling is common for small to large conveyors with simple profiles. The induction motor with VFD and wound rotor induction motor drives are the traditional choices for medium to large belts with repeated starting duty or complex profiles that require precise torque control.

The choice is dependent on location environment, competitive price, operating energy losses, speed response, and user familiarity. AC variable frequency drives have become very reliable and cost competitive. AC variable frequency drive systems are available in sizes and voltages suitable for most applications making them one of the most frequently used drives for conveyors.

WWW.CEMANET.ORG has issued this document (14604) on Apr 24, 2017 to Patarapon Smitkaew (Student), Thailand

WWW.CEMANET.ORG has issued this document (14604) on Apr 24, 2017 to Pattarapom Sritrakool, Suanluang, , , Thailand

This Page Left Intentionally Blank

Introduction Pg 632
Operation Pg 632
Maintenance Pg 633
- Maintenance Staffing for Conveyors

Lubrication Pg 642
Safety Pg 644
Guidelines for Safe Operation and Maintenance Pg 645
- Safety Labels
- Codes & Standards

Guarding Pg 653
- Conveyor Guard Construction
- Types of Conveyor Guarding
- Strength of Guards
- Labeling and Identifying the Hazard
- Return Rolls
- Troughing Idlers
- Head and Tail Pulley Guarding
- Takeup and Bend Pulleys
- Bearings
- Other Components and Accessories
- Guarding Resources

Risk Assessment Pg 662
- Acceptable Risk
- MIL-STD 882
- Examples of Hazards and Hazardous Situations in Bulk Materials
- Example: Severity vs. Probability ALARP Matrix

Trouble Shooting Conveyor Problems Pg 672

WWW.CEMANET.ORG has issued this document (4604) on 04, 2017 to Pattapom Sritrakool, Suanluang, , Thailand

INTRODUCTION

The preceding chapters of this book have provided engineering information that can form the basis for the proper application and design of high quality belt conveyors and conveyor systems. To acquire optimum performance, dependability, and cost economy, equal importance and consideration must be given to the installation, safe operation, and proper maintenance of the system and all related equipment.

Each conveyor system is installed in a different location and facility and will have unique performance requirements, design features, and operating environment. All of these special considerations must be studied and evaluated when developing the best operating procedures and the safest work place.

Because of the number and range of these variables, this chapter can provide only a brief overview of some of the most important and generally applied practices. Conveyor manufacturers are often able to offer assistance in establishing the best operating maintenance and safety programs.

Operation, maintenance and safety are closely linked functions. Too often management of these functions is in conflict because the budgets for operation, maintenance and safety are controlled by different departments. For the safe and efficient operation of conveyor systems it is critical that these primary functions are communicating and working together as a team.

Well designed conveyors are very robust and reliable machines. These inherent features of belt conveyors can lead to complacency where standard procedures are ignored and attitudes about the dangers of conveyors become lackadaisical. Conveyors can be abused by overloading, improper operation, or lack of maintenance and still perform. Spillage and dust hazards become accepted. The conveyor belt and the rotating components create numerous nip points and potential for stored energy hazards that may not be obvious to new personnel or may be ignored by experience personnel due to familiarity.

OPERATION

Characteristically, the operation of truck and rail haulage systems for bulk materials requires a relatively large number of trained personnel. Operators are needed for scheduling and master control of the system, as well as to dispatch individual units and drive large vehicles. Employees are also required for such additional operations as loading, discharge and weighing of the material.

Many belt conveyors, when appropriately designed, installed, and operated, will perform continuously and dependably with as few as one or two operators. One basic requisite is that the material being handled by the conveyor has the originally specified physical properties and is fed uniformly at the design rate.

Performance of a system can be continuously monitored by a combination of modern electrical controls, built-in safety sensors and devices, closed circuit TV, and other signal systems. A central control panel can be equipped so that an operator can monitor performance even at remote areas.

Depending on the length and complexity of a system, one or perhaps two trained mechanics should patrol the system at regular intervals to detect any conditions or components that need attention. On a 5.5 mile (9 km) overland system, two mechanics and a supervisor can usually perform such inspections.

At the time of installation and during trial runs of a large and complex conveyor system, it is advantageous to offer a program of instruction and discussion for all personnel who will be involved in operation, safety, and maintenance of the system. At this time an operating procedure should be developed; the procedure should detail the sequence of operation of the system. Such programs should

www.KEMET.ORG Purchased by Jeff Bennett (14650) on 2-Jan-2017 (Purchased from Mineral, Chemical, Building, Ferrous)

be repeated and the procedures reviewed at sufficiently frequent intervals so that trained personnel can update their knowledge and new employees can be trained.

MAINTENANCE

It is important that belt conveyor maintenance be performed only by well trained and competent personnel who are provided with proper test equipment and tools. They should receive training in the value and conduct of a comprehensive preventive and predictive maintenance program done safely.

There are three types of maintenance: Breakdown Maintenance where the equipment is run to failure and then repaired, usually, on an emergency basis; Preventive Maintenance where the equipment is serviced regularly and rebuilds are performed on a planned schedule before the equipment is run to failure; and Predictive Maintenance where planned inspections are performed to determine the health of a machine and repairs accomplished only when the inspections indicate that the equipment is beginning to go into the failure mode.

Preventive maintenance includes lubrication programs and planned rebuild programs, where predictive maintenance includes vibration analysis trending on bearings, motors, reducers, and oil analysis in engines, reducers etc. A combination of preventative and predictive maintenance programs will help insure maximum availability and component life. A well maintained conveyor system should be able to consistently operate with 90% mechanical availability.

The conveyor belt often represents a high proportion of the total conveyor cost. Since the composition and construction of the belting makes it vulnerable to accidental damage and/or accelerated wear, belt operation and maintenance deserve special attention in a good training program to minimize replacement and repair cost. Refer to Chapter 7 for information on conveyor belting.

Although one stuck idler roll may not appear important, maintenance personnel should realize that under a high-speed belt handling abrasive material, its shell could soon wear through, presenting a knife edge which could severely damage an expensive belt. Well-trained personnel would be able to detect impending failure in such a case, and correct the malfunction before any damage could occur.

Premature wear or accidental damage may result from loading improper grades, sizes, or volumes of conveyed material onto the belt. Also, foreign materials, such as tramp iron, spikes, timbers, and the like, when entrained in the flow, can cause expensive shutdowns and costly repairs. There are many accessories and companies offering predictive measurement services to monitor the wear and accidental damage of the conveyor belt.

Table 14.44 lists the causes and cures of a wide range of belting and operational problems presented in order of probable occurrence. It can serve as good reference, both in a training course and as a maintenance instruction.

It is highly recommended that before initial operation of a conveyor for production there should be careful and detailed inspection of the conveyor and all of its components. Following such a close inspection, test runs should be made to allow careful observation of actual operation before conveying material. During these inspections and test runs, the alignment of all the mechanical components and the operating alignment of the belt on the carrying and return idlers should be checked. Refer to Chapter 5 for information on belt and idler alignment.

CONCEMAT.ORG has received this document (1404.pdf) on Apr 24, 2020 Caterapon Sirikul Guarded, Thailand

Inspection should also establish that there are no construction materials, tools, or projecting members that can rub, tear, or cut the belt when it starts up. Chute skirtboards should have been installed so that they do not touch the belt. The rubber edging strips on the skirts should be adjusted so that they rest only lightly on the belt surface. Belt scrapers should be observed and a final adjustment made, if necessary.

Modern electrical control systems can incorporate computers and other automatic means for measuring performance and controlling such functions as weighing, mixing, blending, and material flow paths. Sensors and other devices for indicating maintenance requirements and unsafe conditions may be an integral part of an electrical control system. The electrical control system should be given a thorough checkout and dry run, or "bug out," during the initial test runs.

Good housekeeping is essential for dependable operation and low-cost maintenance. A build-up of material can eventually stop idler rolls, resulting in increased belt tension and possible damage to the belt. Spillage onto the return belt can also damage it as lumps are squeezed between the belt and pulleys. Scrapers on the return belt at the point where it enters the tail pulley may be desirable in some cases.

A build-up of sticky or frozen material on pulleys or idlers can cause belt misalignment and other malfunctions that can damage a belt. Pulley scrapers and/or the application of soft rubber as a pulley lagging may help to alleviate the condition.

CAUTION:
No one should ever be allowed to remove adhering or lodged material from a conveyor unless the conveyor has been stopped, all electrical controls locked out and tagged out, any potential for stored energy has been neutralized and any stored energy can be safely released after the work is completed.

To optimize the dependability and productivity of conveyors and to minimize maintenance costs, it will be advantageous to stock certain types of repair parts. A well developed maintenance program will provide for emergency repair of both mechanical and electrical types of equipment, and include provision of parts, parts lists, and appropriate drawings.

Climatic conditions may require some additional considerations. Special lubricants are sometimes necessary for subzero operation so as to avoid overload of the drives and undesirably large increases in belt tensions. On applications where the belt may periodically be covered with moisture or frost, it may be advisable to operate the belt empty for a brief period at startup. Application of a belt scraper on the drive pulley side of the belt, just ahead of the point where the belt engages the drive pulley, may be a great help.

Modern belt conveyor electrical control systems employ relatively sophisticated techniques. Chapter 13 of this book explains and illustrates some of the modern automation that has been employed, including programmable controllers, computers, multiplexing, and solid-state control. Although these types of equipment are highly durable, the proper maintenance and servicing of large and complex systems can only be accomplished by specialists in this field. CEMA member companies can be of assistance in solving special problems.

www.CEMAnet.org has issued this document (2014) on April 4, 2017 to Paterapatt School (Student) , Thailand

Maintenance Staffing for Conveyors

In many operations conveyor system reliability is critical for production but maintenance of the conveyor systems is done primarily on a breakdown basis. It is intuitively known and supported by studies that when maintenance is done on a reactive basis only about 35% of the time is actually spent on maintenance and repair but when maintenance activities are proactively planned and scheduled labor utilization is about

65% of the total work day. So purely from a labor utilization viewpoint it would seem to make sense to manage the maintenance of conveyor systems using a proactive predictive and preventative approach.

In many operations conveyor system reliability is critical for production but maintenance of the conveyor systems is done primarily on a breakdown basis. Because belt conveyors for bulk materials are usually robust in design and will continue to operate with serious maintenance issues, breakdown maintenance is all too common. Breakdown maintenance often focuses on treating the symptoms rather than addressing the root causes and results in a never ending cycle of breakdown and repair that diverts maintenance activities from more effective approaches such as predictive and preventative maintenance.

Staffing requirements for conveyor maintenance operations are often done by benchmarking. Unfortunately if the benchmarking is done against operations that rely on breakdown maintenance the result will be to perpetuate the practice. When conveyors are poorly maintained they are less safe, have less availability and create more fugitive materials than when they are well maintained. Safety and environmental regulations continue to tighten and the relationship between safety, cleanliness and productivity is well established making breakdown or reactive maintenance an approach to be avoided for world class operations.

A more rigorous approach is to estimate the mean time to failure of major components, develop a flow chart of the repair sequence and assign labor hours to the various craft skills required. The assumption is then made that in their spare time between failures maintenance personnel can attend to the other maintenance requirements of the system. This approach almost always underestimates the labor required to maintain a conveyor system to meet an established level of availability because there are many seemingly minor components that are key to trouble free and clean operation of a conveyor system that are not considered. These "minor" components are critical to prolonging the life of the major components and require frequent inspection, adjustment and replacement of wear parts to operate reliably because they are subject to substantial abuse and sacrificial wear. If these "minor" components are included in the mean time to failure analysis and adequate inspection and planning staff is provided conveyor systems can be maintained to operate efficiently, safely and with minimum creation of fugitive materials.

Maintenance and operation departments have classic conflicts revolving around keeping the system running, maintenance and cleaning. Perhaps the conflict between production and maintenance will always exist but the relationship between cleaning and maintenance can be improved and many nagging issues resolved by making the cleaning crew part of the maintenance staff rather than the operations department. If the person doing the cleaning realizes that the root cause of the dirt is either design or maintenance and if they are part of the group responsible for corrections there is a higher probability that the problem will be corrected. When the maintenance management realizes that cleaning resources can be re-assigned to predictive and preventive maintenance issues the focus on identifying root causes and mitigating repetitive maintenance issues increases.

There is a tendency on new construction to defer capital costs to future maintenance budgets to keep the capital cost of a project within budget. In reality operating budgets restrict the ability to address items deferred from capital to operating budgets and new facilities often start out under staffed and behind on scheduled maintenance before the plant begins operation and can never catch up. The result is often a shortened life of equipment, demotivated maintenance department and a lower than expected return on the original budget. This practice of deferring capital costs to operating budgets should be avoided.

www.conveyorknowledge.com

Many studies show that planning maintenance work increases labor productivity by a factor of 2. It is common for a typical maintenance operation to have a 33% labor utilization rate where best in class operations have a 67% or better rate. Once a disorganized or understaffed maintenance department falls behind it is almost impossible to catch up.

There are many variables in establishing the size and skills needed for a specific belt conveyor system. These include:

- Geographic location
- Laws, codes and standards
- Age of the system
- Operating hours and required availability
- Abrasiveness of the bulk material
- Length, number and arrangement of conveyors
- Availability of skilled labor
- Access to key and critical components

To aid in developing an equipment list and frequency of inspection and service Tables 14.1 through 14.7 offer some guidance for establishing the base size of a maintenance staff. Local or industry regulations may override these suggestions. The suggestions are estimates for a typical in plant inclined conveyor system 300 feet (100 m) long and is not intended to be all inclusive. Many of the activities can be combined into one walk through. The time estimate is very dependent on access to the conveyor and the length of the conveyor. The specifics of each conveyor has to be considered in estimating inspection and service times.

WWW.CEMANET.ORG has issued this document (14604) on Apr 4 2012 (Rajaprapom Sirirakool, Suanluang) , Thailand

Shift Conveyor Walk Through*		
Component or System	**Activity**	**Approximate Time Required per Conveyor****
Tail Pulley		Every shift Conveyors often give early warning of significant problems in the form of changes in the normal noise patterns of the conveyor, accumulations of fugitive materials or belt tracking. Every shift an experienced and trained person should inspect the conveyor. The purpose of this inspection is to look for symptoms or early indicators of problems so that they can be dealt with proactively. Each component should be observed and some minor adjustment or cleaning may be part of the inspection if it can be done safely. Inspection equipment needed is minimal but should always include a flash light and means of communicating with the operator or control room. A written report, often in the form of a check list, should be completed and symptoms of major problems addressed as soon as possible. The inspection should take between 30 minutes and one hour per shift and is intended as a walk through only. If problems require urgent attention they should be dealt with by shutting down the conveyor or immediately scheduling repairs. Inspection of general condition. Test safety features for proper operation. Complete check list if required. Per Use inspections should take less than 15 minutes per person per shift.
Impact Idlers/Beds		
Loading Chute		
Belt		
Splice(s)		
Skirtboard Seals		
Belt Center Loading		
Carrying Idlers		
Belt Tracking and Tracking Devices		
Monitoring Devices & Sensors		
Guards & Covers		
Safety Devices		
Discharge & Dribble Chute		
Head Pulley & Lagging		
Belt Cleaners		
Drive		
Snub & Bend Pulleys		
Return Run Idlers		
Takeup		
Auxiliary & Accessory Equipment		
General Housekeeping		
* NOTE: Starred inspections may require the belt to be running. ** Some activities can be done simultaneously reducing the time estimate.		

Table 14.1
Shift conveyor walk through

WWW.CEMANET.ORG has issued this document (24604) on Apr 24, 2017 to Chitsanu Sriwongsa (Suez Cement Co., Ltd., Thailand

Required Inspections*		
Component or System	**Activity**	**Approximate Time Required per Conveyor ****
Mobile Equipment		Mobile Equipment and PPE per use. 15 minutes per shift. Design, regulations or company policy may govern other required inspections and frequency
PPE		
Hoists, Slings and Lifting Devices		
Fire Protection System		
Security System & Emergency Drills		
* NOTE: Starred inspections may require the belt to be running. ** Some activities can be done simultaneously reducing the time estimate.		

Table 14.2
Required inspections

Weekly Suggested Preventative Maintenance Inspections and Activities		
Component or System	**Activity**	**Approximate Time Required per Conveyor****
Bend Pulleys	Ensure belt is centered on pulley	10 min
Carrying Idlers	Ensure all rolls are turning*	10 min
	Ensure all idler rolls are free of material buildup*	10 min
	Ensure belt touches all three rolls both in loaded and unloaded states*	5 min
Conveyor Belting	Check for belt damage or abuse:	10 min
	Check belt for belt cupping	10 min
	Check belt for belt camber	10 min
	Check for impact damage	15 min
	Check for impingement damage	15 min
	Check for chemical damage	10 min
	Check belt for rips or tears	15 min
	Check belt for junction-joint failure	5 min
	Check belt for top cover cracking	5 min
Conveyor Drive	Check reducer oil level	10 min
	Check reducer for oil leaks	5 min
	Inspect drive coupling	10 min
	Check oil level in backstop and inspect for leaks	10 min
	Ensure all safety guards for drive are in place and in good condition	10 min
Conveyor Structure	Check for rusted, bent, broken, or missing structural parts	20 min
	Check hand rails and toe plates to ensure good condition	20 min
	Check walkways for material spillage or buildup	10 min
	Check safety gates to ensure good working order	10 min

WWW.CEMANET.ORG has issued this document to Pattarapom Sridokmai, Suanluang, , Thailand

Weekly Suggested Preventative Maintenance Inspections and Activities		
Component or System	**Activity**	**Approximate Time Required per Conveyor****
Gravity Takeup	Check takeup carriage for free and straight operation*	10 min
	Ensure belt is centered on pulley*	10 min
	Ensure all safety guards are in place and in good condition	10 min
Guards	Check for damage and proper installation.	30 min
Head Pulley	Inspect belt cleaners for worn or missing blades	20 min
	Inspect belt cleaners for cleanliness of frames and blades	20 min
	Check belt-cleaner tension according to manufacturers' recommendation	10 min
	Ensure belt is centered on pulley	5 min
Loading Zone	Inspect impact idlers for wear	10 min
	Inspect impact bars for top cover wear	10 min
	Inspect seal-support cradles for wear	10 min
	Inspect and adjust dust seals	10 min
	Inspect dust-suppression nozzles*	10 min
Return Rolls	Ensure rolls are turning freely	10 min
	Inspect rolls for material buildup	10 min
	Inspect mounting brackets for wear from belt-tracking problems	10 min
Safety Switches	Inspect cables for correct tension	10 min
	Ensure flags are free from material buildup	10 min
Snub Pulley	Ensure belt is centered on pulley	5 min
	Inspect pulley for material buildup	5 min
Splices	Mechanical: Check splice and bolts for wear	10 min
	Vulcanized: Check splice for separation	10 min
Tail Pulley	Ensure belt is centered on pulley	10 min
	Check V-plow blade for wear	5 min
	Check V-plow mounting	5 min
	Check V-plow tension	5 min
Tracking Idlers	Check for free pivoting of frame*	5 min
	Ensure all rolls are turning*	5 min
	Check rolls for material buildup	5 min
* NOTE: Starred inspections may require the belt to be running. ** Some activities can be done simultaneously reducing the time estimate.		

Table 14.3
Weekly suggested preventative maintenance activities

www.CEMANET.ORG has issued this document (CEMA 550-2003) for the personal use of Chanin Engg., Thailand

Monthly Suggested Preventative Maintenance Inspections and Activities		
Component or System	**Activity**	**Approximate Time Required per Conveyor**
Bend Pulleys	Check bushings for evidence of movement on shaft	20 min
	Check bearing condition and locking collars for tightness	20 min
	Check for cracks and wear at face and hub ends	20 min
	Check lubrication in shaft bearings	10 min
Gravity Takeup	Check bushing for evidence of movement on shaft	20 min
	Check bearing condition and locking collars for tightness	20 min
	Check for cracks and wear at face and hub ends	20 min
	Check lubrication in shaft bearings	20 min
Head Pulley	Check bushing for evidence of movement on shaft	20 min
	Check bearing condition and locking collars for tightness	20 min
	Inspect pulley lagging for wear and secure to head pulley	20 min
	Check for cracks and wear at face and hub ends	20 min
	Check lubrication in shaft bearings	20 min
Snub Pulley	Check bushing for evidence of movement on shaft	20 min
	Check bearing condition and locking collars for tightness	20 min
	Check for cracks and wear at face and hub ends	20 min
	Check lubrication in shaft bearings	20 min
Tail Pulley	Check bushing for evidence of movement on shaft	20 min
	Adjust mechanical takeup for correct belt tension	20 min
	Check for cracks and wear at face and hub ends	20 min
	Check lubrication in shaft bearings	20 min
	Check lubrication in mechanical takeup adjusters	20 min
	Check bearing condition and locking collars for tightness	20 min
Carrying Idlers	Check lubrication of bearings in rolls	20 min
Conveyor Drive	Check lubrication in backstop bearings	30 min
	Check lubrication in shaft bearings	20 min
	Inspect drive belts for wear and correct tension	20 min
Loading Zone	Inspect chutes and chutewalls for leaks*	10 min
	Inspect entry seals	10 min
	Inspect exit seals	10 min
	Inspect dust-collection pickups for leaks*	20 min
Return Rolls	Check lubrication in bearings in rolls	20 min
Safety Horns/Lights	Test to ensure working properly prior to conveyor start	20 min
Safety Switches	Emergency-stop switches should be tested in cooperation with management	1 h
Tracking Idlers	Check lubrication in rolls and pivot	20 min
* NOTE: Starred inspections may require the belt to be running. ** Some activities can be done simultaneously reducing the time estimate.		

www.StockpileReports has issued this document to [illegible] Stockpile Manual (Manual) - Holland

Table 14.4
Monthly suggested preventative maintenance activities

Semi Annual Preventative Maintenance Inspections and Activities		
Component or System	**Activity**	**Approximate Time Required per Conveyor**
Brakes/Backstops	Test for proper operation under full load*	60 min
Conveyor Structure	Check foundations for settling	30 min
	Check for corrosion	30 min
	Check for structure damage	30 min
	Check walkways, handrails, steps and gates	30 min
Loading Zone	Inspect wear liners for wear	30 min
Safety Switches	Test operation for conveyor shutdown*	30 min
Warning Devices/Signs	Test for operation and audible/visual or readable functionally*	30 min
	Check traffic control signage for visibility and changes in traffic patterns	30 min
Seasonal Activities	Winterizing or dry season preparation	8 h
	Summer or wet season preparations	8 h
* NOTE: Starred inspections may require the belt to be running. ** Some activities can be done simultaneously reducing the time estimate.		

Table 14.5
Semi-annual suggested maintenance activities

Annual Suggested Preventative Maintenance Inspection and Activities		
Component or System	**Activity**	**Approximate Time Required per Conveyor**
Electrical System	Check for open wiring, damaged conduit, overloading and system grounds	8 h
Interlocks	Test to ensure proper interlocking of conveyors*	1 h
Safety Switches	Test conveyor start with flags pulled	1 h
Documentation	Update maintenance documentation and records.	40 h
* NOTE: Starred inspections may require the belt to be running. ** Some activities can be done simultaneously reducing the time estimate.		

Table 14.6
Annual suggested maintenance activities

Studies have found that between 1/4 to 1% of the material conveyed can end up escaping the conveyor. Cleaning around and under moving conveyors is dangerous. MSHA statistics show that 30% of conveyor related accidents are related to cleaning around or under moving conveyors. The frequency of cleaning depends upon how long the process can operate between cleaning and in some cases such as coal, sugar or grain handling is dictated by the potential for fire or explosion. There is a direct correlation between housekeeping, safety and productivity. Keeping the systems and components well maintained is the first line of defense against unwanted escape of fugitive materials and improving safety.

WWW.UNAER.ORG This issue of (ISBN 978-974-9460-) is for Apr 24, 2015 by Prapaporn Sirirojvol, Pranburi, , Thailand

Suggested Cleaning and Housekeeping Activities		
Component or System	**Activity**	**Approximate Time Required per Conveyor**
Belt cleaners	**Flushing of cleaner blades**	**Daily - 30 minutes**
V-Plows	**Flushing of V-plow Blades**	**Weekly - 30 minutes**
Magnetic separators	**Emptying of bin**	**Weekly - 1 hour**
Central dust collectors	**Emptying of bin**	**As required ~ 8 hours**
Spillage	**Cleaning spillage**	**Manually ~ 1 ton per hour Mobile equipment ~ 4 tons per hour**
Carryback	**Cleaning Carryback**	
Dust	**Washdown**	**Manually ~ 2 hours per conveyor**
Pollution control equipment	**Cleaning filters, keeping duct work open etc.**	**Weekly - 1 to 4 hours per conveyor**
Water treatment systems	**Cleaning screens**	**Weekly - 30 minutes**

Table 14.7
Cleaning and housekeeping suggested activities

Many components critical to safe and clean operation of the conveyor require knowledgeable and skilled personnel for inspection and service. This can be accomplished by having dedicated crews or hiring specialty contractors.

LUBRICATION

As with all machinery, a well-developed and mandatory lubrication program is essential for low maintenance cost and dependable operation. Because of the relatively large number of bearings in the idler rolls, and their influence on belt tensions and power requirements, their lubrication is very important. Idler bearings are available in sealed and re-greaseable constructions. Life expectancy for re-greaseable bearings will be enhanced by following the idler manufacturer's recommendations as to the type of lubricant, the amount and frequency of application, and the type of greasing equipment to be used.

Proper lubrication will increase both operating performance and the useful life of the bearings and related components. Lubrication is only one of the items on the preventive maintenance check-list, but it is critical that re-lubrication be performed on a scheduled basis to maximize the service life of the equipment. Proper lubrication requires that each bearing or wear point on the machine or conveyor is re-lubricated with the right volume of the right lubricant at the right time every time.

Selection of the correct lubricant for the application will take into consideration the design service factor, load, environmental conditions, contaminants, product availability, and the intended method of application. A wide range of conventional and synthetic lubricants is available to operating and maintenance engineers today, and selection of a lubricant that will provide the maximum protection against wear under specific operating conditions is important. In many cases a lubrication engineer should be consulted to evaluate the application and make specific recommendations.

The method of application will normally be a determining factor in the frequency of re-lubrication. It is important to understand that the common approach of "if some is good, more is better" does not apply in the case of lubrication. Lubrication related failures or performance problems can be the result of either a lack of lubrication or over-lubrication, so caution should be exercised to prevent either of these conditions. Lubricant is added to bearings to reduce the friction between rolling elements, and just

www.CEMA.ORG Licensed to document (4400) on Apr 24, 2017 to Pattarapol Sirakool, Suanluang, , Thailand

as importantly, it can be used to create a lubricant seal at the rotating interface of inner and outer parts of labyrinth seals. This can be very effective at preventing contamination of bearings operating in harsh conditions, but it is important to account for the additional load on drive elements when this is planned.

Manual lubrication methods require trained qualified maintenance personnel and safe access to perform this task, and machine operation will often limit access to non-production periods when maintenance tasks can be safely performed. Manual, electric, or pneumatically operated grease guns are readily available for manual re-lubrication programs.

Automatic lubrication systems are also available, and can applied to drive system bearings, head and/or tail shaft bearings, and idlers. These systems are comprised of a pumping system, a programmable control system that cycles the pump on the desired frequency, and metering valve or injectors that are sized to provide the correct proportional volume of lubricant to each bearing connected to the system. One of the key benefits of an automatic lube system is the capability to re-lube frequently with relatively small metered volumes of lubricant, safely, while the conveyor system is in operation.

The same automatic lube system can also be utilized to service bearings on related machine elements at the in-feed and discharge end of the system, and can accommodate bearings of different sizes. Refer to the lube system diagram and photographs in Figures and 14.8 through 14.10 for examples. Automatic lubrication systems should be designed by the manufacturer or a qualified distributor or lubrication engineer.

WWW.CEMANET.ORG has issued this document (14604) on Apr 24, 2017 to paterapins Sirikul (suanlubd@gmail.com).

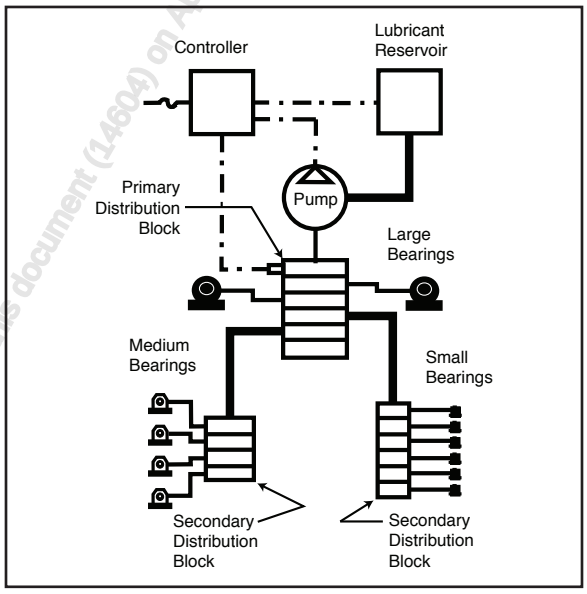

Figure 14.8
Automatic lubrication system schematic



Figure 14.9
Automatic lubrication

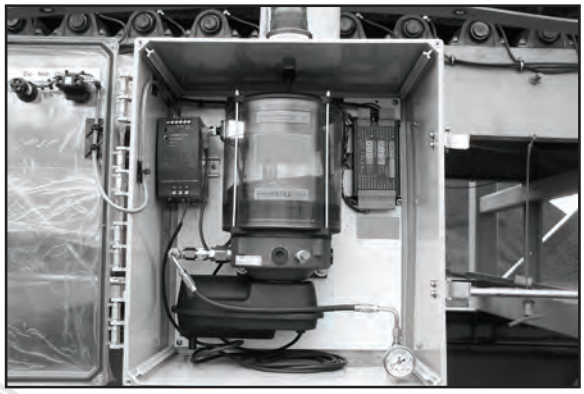

Figure 14.10
Automatic lubrication pumping unit

SAFETY

Modern belt conveyor safety generally begins with sound design that, as far as is practical, avoids foreseeable dangers and hazards. Diligence in safety considerations must be applied during the course of manufacture, installation, and establishment of operating and maintenance policies and procedures.

The many years of experience of leading conveyor engineers and manufacturers have shown that the development and maintenance of a safe work place requires the combined effort and cooperation of the various organizations and functions that may become involved in a belt conveyor installation and operation. Many CEMA member companies offer specialized training on the safe operation and maintenance of their designs and products.

After the design and installation are developed and supervised by qualified engineers familiar with recognized safety features and requirements, the next priority should be personnel training. Operating and maintenance personnel and their supervisors should be initially and then periodically retrained in safe operating procedures, recognizable hazards, precautions, and the maintenance of a safe work place. They should also be provided with the proper tools and equipment to operate and maintain the conveyor in an adequately safe condition. Employees who do not have proper training should be made aware of hazards and forbidden to enter or perform work in hazardous areas.

Generally, the accidents that cause personal injury in connection with a belt conveyor are not the result of faulty design or component failure. It has been found that most accidents are caused by human error, improper maintenance, lack of effective training or lack of awareness of possible hazards. It has been shown that 30% of all conveyor related accidents happen during clean-up operations around conveyors. Typical conveyors operate at speeds of 300 fpm (1.5 m/s) to over 1000 fpm (5 m/s). If you assume 3/4 second reaction time for the average individual, a conveyor running at 450 fpm (2.3 m/s) will move 5.6 feet (1.7 m) before a person can react. Before a person can react the conveyor will pull a tool, arm or loose piece of clothing into the conveyor! It is not always the improperly trained or careless worker who will become involved in an accident. In many instances the worker will have a perfect safety record for years before becoming involved in an accident. Periodic safety refresher training is critical to worker safety awareness. When design defects are discovered they should be rectified as soon as possible as redesign or elimination of a hazard is the most effective way to improve safety.

The Conveyor Equipment Manufacturers Association (CEMA), in conjunction with the American Society

www.EBOOKSTORE.ir (Ebook Number 14460) ©IHRDC 2017 to Pattarapom Sritrai

of Mechanical Engineers (ASME), has taken an active role in the development and maintenance of the most widely recognized and accepted safety standard for conveyors, ASME B20.1 "Safety Standard for Conveyors and Related Equipment". The document also recommends that ASME Standard B15.1 "Safety Standard for Mechanical Power Transmission Apparatus" should be used in conjunction with ASME B20.1.

The stated purpose of Standard ASME B20.1 is to present certain guidelines for the design, construction, installation, operation, and maintenance of conveyors and related equipment. These guidelines and recommended safety practices will be of assistance in establishing an appropriately safe work place. It is important to realize that the best design and safety features can be useless in conjunction with faulty maintenance and operating practices.

The broad scope and fine detail of ASME Standard B20.1 preclude its inclusion in this book. However, it is highly recommended that those responsible for assuring safety in the engineering, manufacture, installation, operation, and/or maintenance of belt conveyor systems and equipment acquire and use Standard ASME B20.1 as a reference and guide.

The National Safety Council book, Conveyor Safety, is another excellent reference for safety in the design and operation of material handling systems.

GUIDELINES FOR SAFE OPERATION AND MAINTENANCE

The following general safety guidelines are not extracted directly from, and cannot take the place of, the more complete and detailed information available in the ASME Standards B20.1 and B15.1. A brief listing is presented here simply to illustrate the type of safety considerations generally applicable to belt conveyor installations and equipment.

- At a time close to completion of installation, all personnel and supervisors should be given a complete indoctrination in the use of the system and all of its equipment. They should learn what to expect from the equipment and how to identify problems. Field inspection and classroom techniques are two valuable types of training.
- A formal safety training program for operations, maintenance, and supervisory personnel will go a long way toward establishing and maintaining the highest standards of safety in the work place.
- Concurrent with completion of the installation and the trial runs of all belt conveyors and associated equipment, a "Safety Checkup" is recommended. The checkup should include all mechanical and electrical operating equipment, plus the structures, walkways, ladders, stairs, head rooms, and access ways. It is at this time that a detailed physical inspection of the facility and the installed conveyor equipment will often reveal the need for additional guarding, safety devices and warning signs.
- At no time should the conveyors be used to handle material other than that originally specified. Capacity and belt speed design ratings should not be exceeded.
- Only trained personnel should be allowed to operate the conveyor system. They should have complete knowledge of conveyor operation, electrical controls, safety and warning devices, and the capacity and performance limitations of the system .
- The location and operation of all emergency control and safety devices should be made known to all personnel. Surrounding areas should be kept free of obstructions or materials that could impede ready access and a clear view of such safety equipment at all times.
- A program should be established to provide frequent inspections of all equipment. Guards, safety

www.EngineeringBooksPDF.com

devices, and warning signs should be maintained in their proper positions and in good working order. Only competent and properly trained and authorized persons should adjust or work on safety devices.

- A "walking inspection" of a belt conveyor system is a good means by which well-trained maintenance personnel can often detect potential problems from any unusual sounds made by such components as idlers, pulleys, shafts, bearings, drives, belts, and belt splices.
- Hands and feet should never come in contact with any operating conveyor component, and no one should be allowed to ride on a moving or operable conveyor. Poking at or prodding material on the belt or any component of a moving conveyor should be prohibited. Contact with, or work on, a conveyor must occur only while the equipment is stopped, following the proper lock out, tag out and test out procedures unless the equipment is specifically design to be safely inspected or serviced and the worker specifically trained and aware of the hazards with the belt in operation.
- No person should be allowed to ride on, step on, or cross over a moving conveyor, nor to walk or climb on conveyor structures, without using the walkways, stairs, ladders, and crossovers/crossunders provided. Refer to CEMA R SBP-001: Design and Safe Application of Conveyor Crossovers which is available for free download at the CEMA Web Site's Safety Page. (http://www.cemanet.org/safety/)
- Good housekeeping is a prerequisite for safe conditions. All areas around a conveyor, and particularly those surrounding drives, walkways, safety devices, and control stations, should be kept free of spillage, debris and obstacles, including inactive or unused equipment, components, wiring, and obsolete or non-applicable warning signs or posted instructions. Refer to Chapter 11 for information on belt cleaners and other spillage reducing accessories.
- Any conveyor found to be in an unsafe condition for operation or one that does not have all guards and safety devices in excellent condition, should not be used unless adequate supplementary safety devices are installed.
- All persons should be barred by appropriate means from entering an area where falling material may present a hazard. Warning signs and barricades can be used.
- First-class maintenance is a prerequisite for the safest operation of conveyors. Maintenance, including lubrications, should be performed with the conveyor stopped and locked out. Special lubricating equipment, lube extensions, pipes, and the like can be installed so as to permit lubrication of an operating conveyor without any foreseeable hazards.
- Good lighting contributes to a safe working environment.
- During the life of a belt conveyor system, its operational conditions and environment may require changes. There should be a continuing effort to detect and treat promptly any new possible safety hazards associated with these changes. If such a hazard cannot be readily eliminated, warning signs, barricades, or posted instructions should be installed.

Safety Labels

CEMA Safety Labels and Placement Guidelines were developed by the CEMA Safety Committee to provide for members and non-members consensus advice for the selection and application of safety labels for use on conveyors and related material handling equipment to assist in accident prevention.

Prior to operating the conveyor or any of the associated accessories or equipment all safety markings, guards and warnings must be in place in accordance with governmental regulations and site specific requirements.

www.CEMANET.ORG has licensed this document (2014-04-01 Patrick Smith (Siemens), Midland)

Note:
Should any of the safety labels supplied by the equipment manufacturer become unreadable for any reason the equipment user is responsible for the replacement and location of these safety labels. Replacement labels can be obtained from your equipment supplier, a CEMA Member Company or CEMA.

CEMA Label Placement Guideline BH-1, BH-2 and Safety Poster are intended for bulk material handling conveyors. The Entire CEMA Safety Label Program is detailed in CEMA Brochure 201 - Safety Label Brochure which is available from CEMA.

Even with the increasing use of belt conveyors in the haulage of bulk materials, the number and severity of accidents have been reduced. When conveyors are used as a means of transport in the place of vehicular units, such as railcars and trucks, the problem of traffic-related accidents is minimized. Also, environmentally related health problems can be easily limited by the elimination of dust hazards. Indeed, belt conveyors substantially reduce the hazards present in practically any other method of high capacity bulk materials handling. The further reduction in number and severity of accidents will be a direct result of applying and enforcing the safe practices of design, installation, operation, and maintenance such as have been described here and in ASME Standard B20.1. Many CEMA member companies provide safety, operating and maintenance training related to industry needs as well as their products and services.

WWW.CEMANET.ORG has issued this document (14604) on Apr 24, 2017 to Rajesh Sankar (Quantum Pty. Thailand)

CEMA Safety Label Placement Guidelines

CEMA Safety Labels — ***Placement Guidelines***

Product: Bulk Handling Equipment

Equipment: Bulk Belt Conveyors

To be placed on removable guards to warn that operation of the machinery with guards removed would expose chains, belts, gears, shafts, pulleys, couplings, etc. which create hazards.



"A"

General warning to personnel that a conveyor's moving parts, which operate unguarded by necessity of function, i.e. belts, rollers, terminal pulleys, etc., create hazards to be avoided; in particular, conveyors which stop and start by automatic control near operator work stations would use this label.



LOCATE AT ENTREACE TO CONVEYOR WALKWAY

"D"

To be placed at entrances to enclosed areas which would expose personnel to operational or environmental hazards which should only be entered by trained and authorized personnel under specific conditions; Examples, lifting conveyors, transfer car aisleways, confined spaces, etc.



"F"

To be located on conveyors where there are exposed moving parts which must be unguarded to facilitate function, i.e. rollers, pulleys, shafts, chains, etc.



LOCATE ON INSPECTION DOOR (S)

"B"

To be placed up to a maximum of 50' centers along the walkway side.



SPACE UP TO A MAXIMUM OF 50 FT CENTERS (WALKWAY SIDES)

"E"

To be placed on removable guards to warn that operation of the machinery with guards removed would expose chains, belts, gears, shafts, pulleys, couplings, etc. which create hazards.



"C"

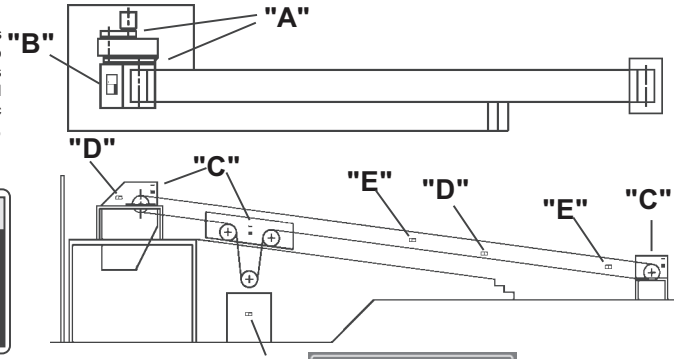

BH-1

Figure 14.11
CEMA BH-1 safety label placement guideline for bulk handling equipment

CEMA Safety Label Placement Guidelines

CEMA Safety Labels ***Placement Guidelines***

Product: Bulk Handling Equipment

Equipment: Bulk Belt Conveyor Accessories

These labels are to be placed on or near the maintenanced access for the following bulk belt conveyor accessories:

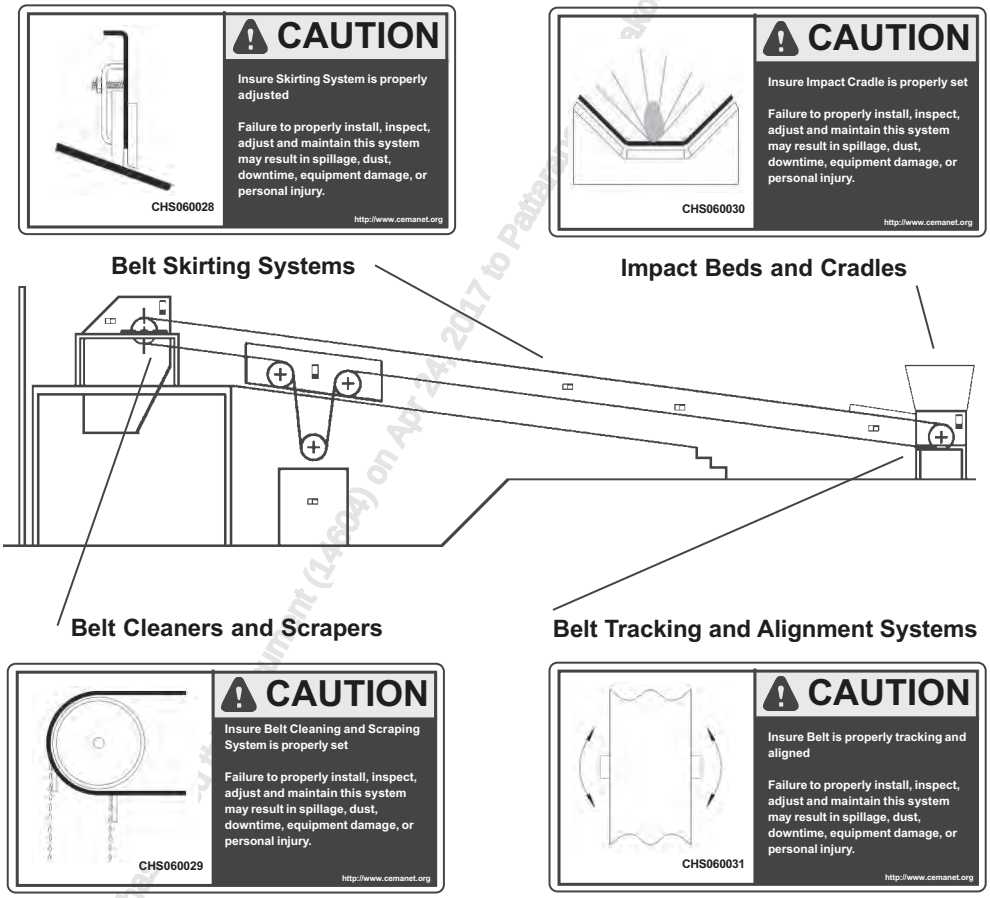

THIS GUIDELINE SUPPLEMENTS
CEMA BULK HANDLING EQUIPMENT PLACEMENT GUIDELINE - BH-1

BH-2

WWW.CEMANET.ORG Downloaded/printed by ... School, Suanluang, ... Thailand ... Agreement (1460/4) on Apr 14, 2017 to Patent ...

Figure 14.12
CEMA BH-2 safety label placement guideline for bulk handling equipment



Figure 14.13
CEMA bulk handling safety poster

WWW.CEMANET

CODES & STANDARDS

Table 14.14 is a partial list of several organizations which publish codes, standards, and recommendations affecting many issues relating to the safe design of belt conveyor support systems. See Chapter 2.

Acronym	Resource	Web Address
AISI	American Iron and Steel Institute	www.steel.org
ANSI	American National Standards Institute	www.ansi.org
ASTM	American Society of Testing Materials	www.astm.org
AWS	American Welding Society	www.aws.org
ISO	International Standards Organization	www.iso.org
CEMA	Conveyor Equipment Manufacturers Association	www.cemanet.org
MSHA	US Mining Safety and Health Administration	www.msha.gov
NFPA	National Fire Protection Association	www.nfpa.org
OSHA	US Occupational Safety and Health Administration	www.osha.gov
WRTB	Wire Rope Technical Board	www.wireropetechnicalboard.org

Table 14.14
Safety standards organization and resources

WWW.CEMANET.ORG has issued this document (14604) on Apr 24, 2017 to Puttachom Sriharod, Siam Steel, , Thailand

The following publications listed in Table 14.15 are examples of codes and standards published by these organizations. Project managers, engineers, and designers should determine the most current and relevant documents which are required for each application. In many cases, state and local codes and standards may also apply.

Organization and Publication	Conveyor Safety Related Issues
AWS D1.1, "Structural Welding Code – Steel"	Welded Connection Design Requirements, Weld Qualification, Fabrication, Inspection, Symbols
AGA, "The Design of Products to Be Hot-Dip Galvanized"	Structural Design Considerations, Drainage, Venting, Distortion, Surface Repairs
OSHA, "Title 29 Code of Federal Regulations Part 1910"	General Safety Issues, Stairs, Handrail, Walkways, Ladders, Guarding, Egress
MSHA, "Title 30 Code of Federal Regulations Parts 1 to 199"	Safety Issues in Mining Applications
WRTB, "Wire Rope Users Manual"	Rope Selection & Strength, Safety Factors,
ANSI/ASME B20.1	Safety Standards for Conveyors and Related Equipment
ISO 7149	Continuous Handling Equipment - Safety Code - Special Rule
ISO 5045 "Continuous Mechanical Handling Equipment" - Safety Code for Belt Conveyors -	Examples for Guarding of the Nip Points
ISO 1819 "Continuous Mechanical Handling Equipment" - Safety Code -	General Rules International Standards Organization
CSA Z432 Canadian Standards Association	Safeguarding of Machinery
CEMA Publication No. 201 "Safety Label Brochure"	Conveyor Equipment Manufacturers Association Standardized Safety Labels
MSHA U.S. Department of Labor, Mine and Health Administration "Guide to Equipment Guarding at Metal and Non-metal Mines"	Guarding
ANSI Z244.1 "Personnel Protection"	Lockout/Tag out of Energy Sources - Minimum Safety Requirements
ANSI/ASME B15.1	Safety Standard for Mechanical Power Transmission Apparatus
The National Safety Council, "Conveyor Safety", ISBN 1-885581-27-0	Reference book for safety in the design and operation of material handling systems.

Table 14.15
Examples of relevant safety related conveyor publications

WWW.CEMANET.ORG has licensed this document to 1800-49 for Apr 2017 to Pattarapon Sirikongdara Chiang Mai, Thailand

GUARDING

Contact with moving conveyor parts such as idlers, pulleys, drive components and shafts may result in serious injury or death. It is important that proper conveyor guarding be used to protect personnel from the potential injury that may result from contact with this equipment during operation. The regulations and enforcement actions are not uniform so it is important to conform the requirements for guarding specific to your location and type of operation.

Guards and basic safety devices are normally included with major equipment such as drives and as part of the original conveyor construction such as safety shut off pull cord switches. There are other potential hazards on conveyors due to the moving belt and conveyor components or accessories that need to be accessed by the end user and may need additional guarding. The most common hazard that needs to be addressed locally are in-running pinch points, also called nip points, that are hazards due to the specific layout and location of the conveyor.

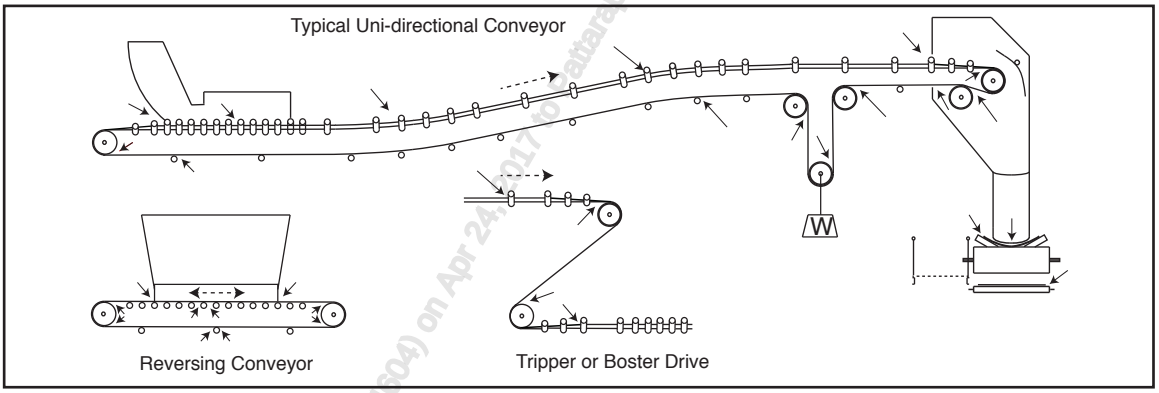

Figure 14.16
Potential In-running pinch points on common conveyor arrangements

It is the responsibility of the conveyor owner to ensure that proper guarding is utilized on the conveyor system. A "Best Practices" Plan for conveyor guarding should be developed and implemented with the input of all concerned to help ensure that the most effective guards are put in place and properly maintained. In addition, before adopting any comprehensive guarding program it will be beneficial to include representatives from state and federal regulatory agencies in this discussion to help ensure that the guard design and program comply with applicable standards. Guard Opening Size Gauges are available from most safety equipment supply houses. A guard must meet several basic criteria to be effective. Input from on site personnel or those who work in the area where the guard is required is important and can help to create an effective guard that is accepted by those working on or around the guard.

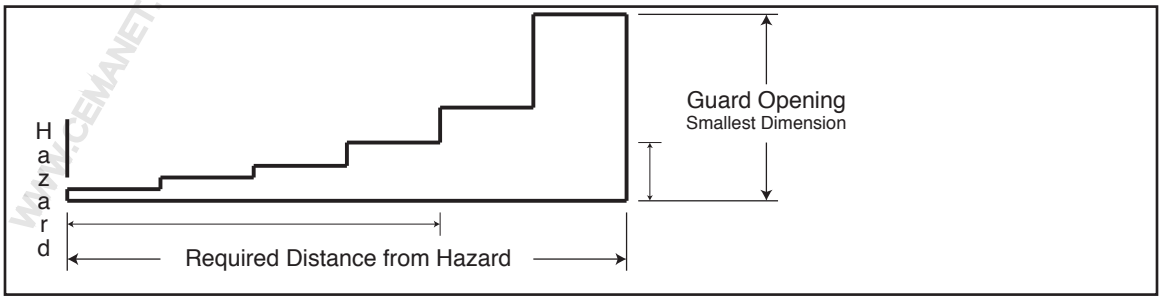

Figure 14.17
Guard opening size gauge concept

In general an effective conveyor guard must protect persons:

- From inadvertent, careless, or accidental contact with, or access to, hazards
- From hazards during deliberate or purposeful work-related actions
- From projected or falling conveyed materials or components
- From accidental release of fluid pressure, heat or hot surfaces

In general an effective conveyor guard should:

- Be considered a permanent part of the conveyor.
- Be designed for the specific component and specific conveyor.
- Not present a hazard in itself.
- Be installed as close to the component as feasibly possible while maintaining a safe distance from the hazard.
- Prevent access to all moving components.
- Be designed and fabricated, to the extent practical, to such dimensions and weights that one person is able to physically install and remove the individual guard components.
- Be constructed and maintained to withstand the loads, vibrations and shocks during normal operation and maintenance.

The guard must prevent contact with the moving parts and the guard must be recognizable as a guard while allowing proper maintenance without imposing undue requirements on personnel. There are a variety of resources available that may be helpful with developing a best practice program for conveyor guarding. A CEMA Member conveyor equipment supplier may also prove to be a valuable resource when it comes to the issue of conveyor guarding.

Conveyor Guard Construction

Conveyor guards may be constructed from a variety of materials. This may include expanded metals or plastics. These materials will normally have openings that are small enough to prevent contact with the hazard being guarded. Openings allow fines and other materials to pass through the guard and serve to facilitate inspection of conveyor components during normal operation. Clear solid materials, while allowed, are not generally used in guarding bulk conveyors because visibility often becomes obstructed over time.

It is important to keep the opening sizes as small as possible so that it is not possible for a body part to move through them and contact the hazard being guarded. In addition, the appropriate distance around the guard should be maintained from the danger zone to the opening so that no one may reasonably reach around and contact this area. This will help to maintain the safest possible level of operation. Most standards based on openings in the guard and safe distance from the hazard originate from the work of Vaillancourt and Snook of the Liberty Mutual Research Center for Safety and Health. See Figure 14.17. There are differences in the various standards so it is important to use the correct gauge for the governing regulations. The safe distance around the hazard must also be considered when the guard can not completely contain the hazard. While standards vary, generally guarding a 3.2 ft (1 m) distance around the hazard to prevent reaching around the guard is acceptable. The height of the guard will depend on the height of the hazard.

The color chosen should be distinctive and consistent with other color codes used through out the site. Red should not be used for guards as it is generally reserved for fire fighting equipment, e-stops and similar equipment. Safety Orange or Safety Yellow are frequently used colors for guards but local regulations or inspectors' opinions may differ. For example OSHA 1910.144(a)(3) states: Yellow shall be the basic color

www.CEMAonline.org downloaded this document on Apr 14, 2017 by Pattanapon Sritrakool, Sunluang, , , Thailand

for designating caution and for marking physical hazards such as: Striking against, stumbling, falling, tripping, and "caught in between" while MSHA simply requires a "highly distinctive" color.

Types of Conveyor Guarding

There are three basic types of guarding that may be selected as a general method of protecting personnel from the moving parts of a conveyor:

- Point guarding is guarding the specific moving part that poses the hazard.
- Area or perimeter guarding is guarding a wider area to restrict access to a specific area.
- Guarding by location when the hazard is a safe distance from normal access points.

Point guarding is most commonly used in guarding conveyor hazards, as this method of guarding allows for the design of a guard specific to the component and limiting its accessibility.

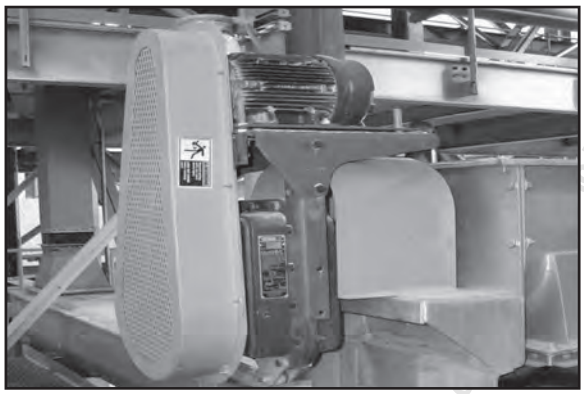

Figure 14.18
Typical point guard

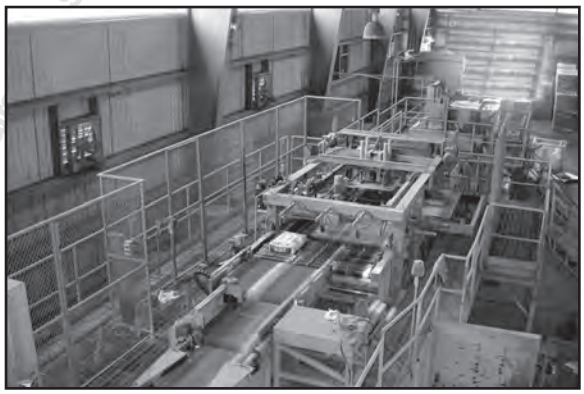

Figure 14.19
Typical area guard

Guarding by location is considered inherent when moving machine parts are located in a position where contact is not possible. Generally, these components will not need to be guarded, as they are presumed safe due to the remote nature of their location. Special care and consideration should be taken if a component is to be considered guarded by location to help ensure that no hazard has been overlooked that may pose a risk. For example elevated return rollers are often considered "guarded by location" but may still present the hazard of falling from their brackets onto personnel or equipment below. There are various requirements for the distance required between the hazard and the point of access depending on the standard being applied. For example Mexican Standards do not define a safe distance, US Standards specify 7 ft (2.1 m) while Canadian Standards vary from 2.4 to 2.7 meters (7.9 to 8.9 ft) depending on whether it is considered a normal or extreme hazard.

WWW.CEMANET.OR



Figure 14.20
Guarding by location



Figure 14.21
Pinch point

The terms pinch point and nip point are often used interchangeably. A nip point is generally considered a point where at least one component is normally in motion and creates an in running hazard such as where the belt runs on an idler. A pinch point is generally considered to be a hazard where intermittent motion could cause entrapment or crushing such as when a tripper car moves periodically.

Area guarding, or placing a larger guard over a wide area to prevent access to the area and thereby protect against multiple hazards, may be used. Area guarding is useful when there are a number of hazards in a defined area that require limited access. Used indiscriminately area guarding may encourage being bypassed as this type of guarding may result in difficulty to access components and prevent proper routine inspection and maintenance.

Perimeter guarding requires that the entire area of the conveyor be sealed off with the use of a fence or other materials that prevent access to the area surrounding the conveyor system. This type of guarding will usually require the use of a lock to prevent access to the area and may also make use of electronic cut-off switches that automatically deactivate the conveyor system if personnel access the area.

Strength of Guards

There are few specific load requirements in the various North American standards for guards, rather the regulations make general statements such as, the guard shall be suitable for preventing contact with the hazard based on the expected loads.

Other standards may provide some direction regarding the strength of guards. Australian Standard A1755-2000 specifies that guards shall maintain the required clearance from the hazard with a load of 450 N (101 lbf) when applied over an area of 50 x 50 mm (2 x 2 in). In addition the Australian standard requires the fixing strength of guards that may be climbed or walked upon shall resist a force of 90 kgf (198 lbf) and an additional horizontal load of 220 N (49 lbf) on the fixing points of the guard while maintaining the required clearance from the hazard. European Norm EN 620-2002 specifies that a guard must withstand a 1500 N (153 lbf) force over an area of 200 x 200 mm (8 x 8 in) and not be permanently deformed more than 1%.

The selection of the guarding materials has a direct effect on the strength of the guard and often complicates the calculation of the load bearing capacity and defection characteristics of the finished guard. In addition the method of construction, for example bolting, welding or crimping, also effects the

www.CEMA.ORG has licensed this document (14604) on Apr 24 2012 (Pattrapom Sritrakul)

strength of the finished guard. Therefore it maybe more practical to test guards after fabrication to judge if they will handle the load without excessive deflection. The size of the opening in the screen material governs the distance the guard must be placed from the hazard. A common screen material used for small to medium conveyor point guards is designated 1/2-inch No. 16 flattened expanded metal with diamond shaped openings of approximately 0.3 x 1.0 inches (8 x 25 mm) with a weight of 0.8 lb/ft^2 (1.2 kg/m^2) for plain carbon steel. Using 1/2-inch No. 16 expanded metal with the largest opening dimension of 1 inch (25 mm) would allow the guard to be placed no closer than 6.5 inches (166 mm) from the hazard based on a standard guard opening gauge, (Figure 14.17). A common frame material for flattened expanded metal guards is angle iron. A common drawback to expanded metal or woven wire guard materials is sharp edges around purposeful openings or the edges of the guards. MSHA now reports that guards are now responsible for 12% of all accidents underground.

A common constraint on the construction of a removable guard is the total weight of the guard. If the guard is intended to be removable, a common weight limit is 50 lb (23 kg). Large guards may be hinged or constructed in sections. There are requirements in the various North American standards that require the use of a tool to remove a guard. A tool is commonly defined in safety regulations as something the operator would not normally need to perform their job duties.

Labeling and Identifying the Hazard

Appropriate labels should be used in order to help personnel identify the specific hazards associated with the guard. Labels may be home made but may also be available from a variety of sources. Where labels are impractical most standards allow for the alternate use of signs. CEMA provides a variety of labels that may be used to identify some of the most common hazards associated with conveyor components and systems. The following label is one example of how a particular hazard may be identified:



Figure 14.22
CEMA warning label CHR930001



Figure 14.23
CEMA guard removed warning label

Signs may also be employed if the affected area is large enough that a sign should be used in place of a label. Both labels and signs must be properly maintained and replaced as needed so that the hazard is identifiable by personnel. It is the responsibility of the end user to ensure worn or damaged warning labels are replaced.

Return Rolls

Guarding is usually required on return rolls where personnel may be exposed to return rolls. There are a variety of ways to enhance the safety of belt conveyors where return rolls are concerned. The various types of guards available, whether available commercially or produced on site allow conveyor owners to choose the best available options in order to protect personnel from the variety of issues concerning return rolls. A properly designed and installed return roll guard will effectively eliminate accidental contact with the pinch or nip point. Return roll guards are also required where return rolls may work loose from the

brackets, fall to the ground and potentially injure personnel.
The guarded by location distance applies to the pinch point; defined as the area where the leading edge of the rotating roll meets the moving belt on the return side (Figure 14.24). In this case the pinch point is actually comprised of two moving parts – the belt and the roll. Once the guard protects the roll and any openings meet the safe distance requirement, the danger created by the pinch point has been contained. A return roll guard should provide full protection against the pinch point and should catch the roll if it comes loose from the supporting brackets. It should also encapsulate the roll ends from both sides and the backside of the roll to help discourage contact with the roll in general. Because return rollers often build up with material a means for quick release of the guard for cleaning the roll and guard should be considered. If the return roller is guarded by location then the size of the openings in needed in the guard can be sized only to catch the roller. Every year there are fatal accidents related to cleaning of and around moving pulleys and idlers so cleaning of rollers and pulleys must only be done with the belt shut down, locked out and tested out.



Figure 14.24
Return roll guard



Figure 14.25
Ease of maintenance access is important

Figure 14.25 shows the actual pinch point or specific area of concern as defined by the area where the rotating roll meets the moving belt (at least one moving part in a pair of parts come together forming a pinch point). The total weight becomes a factor limiting overall effectiveness. Several standards limit individual safe lifting weights to 50 lb (23 kg) and this concept should be applied to removable guards that must be manually handled. Area guarding may also be used to guard return rolls. In this case the use of expanded metal, nets or other materials may be used to enclose the underside of the conveyor and prevent access to the return rolls.

Troughing Idlers

Regulations vary on what is acceptable or required for toughing idlers. Most regulations allow equipping unguarded conveyor systems next to walkways or accessible from the ground with emergency stop switches or pull cords that automatically stop the conveyor when activated. The emergency stop switches or pull cords must be installed sufficiently tight and in a location that can be accessed by personnel so that they can de-energize the drive motor of the conveyor by pulling the cord. Alternatively, some regulations allow railings or specify full guards may be installed along the length of the conveyor parallel to the troughing idlers in such a fashion as to help prevent contact with the rollers. While considered acceptable, E-stops or pull cords usually do not trigger an immediate shut down of the conveyor. Generally there is a coast time and in many cases there is a sequence of shut down that increases the time for the conveyor to come to a complete stop.

www.PEARLHARBORG has a non-exclusive, non-transferable, non-commercial, non-sublicensable, limited, revocable,



Figure 14.26
Conveyor covers can be utilized as guards and are generally proactive in nature



Figure 14.27
Emergency stop cord switches are reactive in nature

To enhance the safety of the conveyor system it is worth considering the additional use of full conveyor covers on the conveyor. Although typically considered for protecting the bulk solid from weather, these covers may protect personnel from the area where the toughing idler rolls meet the belt and enhance the overall safety of the conveyor system. In addition to enhancing safety conveyor covers are valuable additions to any conveyor in that they protect conveyed materials from rain, snow and wind. They also help extend belt and idler life by protecting both of these critical components from exposure to the elements.

Head and Tail Pulley Guarding

The head and tail ends of a conveyor are areas that frequently need maintenance and cleaning present hazards when guards are improperly designed or circumvented to facilitate cleaning or maintenance while the belt is running. Head and tail pulleys must be properly guarded to protect personnel from the moving parts and pinch points and should be designed to discourage unauthorized removal. Head pulleys and drives must additionally be guarded to protect personnel from the drive pulley, hot surfaces, V-belts, couplings and shafting. Depending on the configuration and location, the pulleys they may need to be guarded on all sides, top and bottom to prevent inadvertent contact with moving parts and pinch points. In addition there may be hazards associated with flying materials where conveyors are loaded and unloaded that need to be considered in the guarding approach.

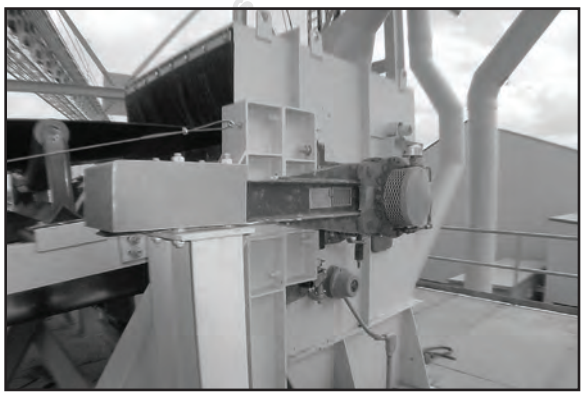

Figure 14.28
Typical head pulley guarding of shaft and backstop



Figure 14.29
Typical tail pulley guarding

Tail pulleys must be guarded so that the rear and top of the pulley are not accessible by personnel. In some cases, if the underside of the pulley is elevated and personnel have access to this area; the underside of the pulley must also be guarded. Guards in the Head and Tail sections of a conveyor are often walked or climbed upon during cleaning and maintenance and must be designed to anticipate these loads and provide anti-slip features and tie-offs if needed.

Takeup and Bend Pulleys

Gravity or powered takeup and bend pulleys must also be guarded to prevent contact with these components. Guards should be installed at these locations to prevent access to the bend pulleys and takeup pulleys and their travel ways. Takeup pulley counterweights may pose multiple hazards if they are suspended in such a fashion that they may contact the ground or floor should the belt break. In these cases an area guard, such as a fence that secures the affected area, should be installed to prevent personnel from entering this area and being injured by a moving or falling counterweight. Wire rope systems for takeups must be guarded to prevent entrapment in the pulleys and to contain the wire rope and takeup pulley in case of failure. Safety devices are available for falling takeup weights, see Chapter 11. Screw style takeups are often enclosed by the tail pulley guard with the ability to adjust the tension without removing the guard.

North American standards give no or varying guidance on what is considered a safe distance enclosure around Takeup counterweights. Other standards generally state that if; the enclosure height meets the stated safe overhead distance requirements, which vary from 7 ft (2.1 m) to 2.7 m (8.9 ft), is spaced at least 3.2 ft (1.0 m) from any moving part of the counterweight system, the space between the surface and the bottom of the guard is no more than 8 in (200 mm) and is secured against unauthorized entry, then the guard should meet the intent of protecting workers from accidentally being in or reaching into the hazard zone created by the suspended counterweight.



Figure 14.30
Typical bend pulley guards



Figure 14.31
Typical counterweight area guarding

Effective guarding of the conveyor system may be achieved in a variety of ways. However, no guard is a substitute for best practices and good judgment. Proper training and periodic re-training of personnel that work on or around conveyors is an essential element to an effective guarding program.

www.conveyorsolutions.com

Bearings

Unguarded and easily accessed bearings may present hazards associated with rotating shafts or collars and must be guarded. Where greaseable bearings are within a guard, such as at the tail pulley, the lubrication point must be extended to the outside of the guard so that they can be greased without any part of the worker's body breaking the plane of the guard.

Other Components and Accessories

There are many other components and accessories used on conveyors that must be considered for guarding. For example wheels on moving conveyors or sampling devices. There are also non-moving components such as nuclear analyzers or level detection sensors that present non traditional hazards that require guarding. Other hazards such as working on elevated surfaces or low clearances are covered under other standards and their protection means are not typically considered guards. A thorough risk assessment of the conveyor can help identify hazards and mitigate their effects through redesign or guarding.

Guarding Resources

There are numerous resources available to assist with conveyor guarding. Many safety organizations freely share their information and can be a useful source of training and reference materials. A few resources are listed here:

- ASME B20.1-2009 Safety Standards for Conveyors and Related Equipment (United States)
- ANSI B11.3-2002 Safety Standards for Machine Tools (United States)
- Australian Standard AS 1755-2000
- Canada Safety Publication RG-490
- European Standard EN 620 Safety and EMC requirements for fixed belt conveyors for bulk materials
- Mexican Standard MSHA Code of Federal Regulations Title 30 Parts 1-199 Mineral
- MSHA http://www.msha.gov (United States)
- MSHA Guide to Equipment Guarding OT 3 Revised 2000
- MSHA Title 30 CFR (United States Code of Federal Regulations) Parts 56 & 57
- OSHA Title 29 CFR (Unites States Code of Federal Regulations) Parts 1910 &1926

WWW.CEMANET.ORG has issued this document (1402) on Feb 14, 2017 to Patcharapon Chaikongsuang, , Thailand

RISK ASSESSMENT

Risk can be defined as a combination of the probability of occurrence of harm and the severity of that harm. Risk assessment can be applied to personnel, property, environmental and societal events and their consequences. Reactively evaluating risk and dealing with the consequences through a variety of mitigation techniques is common in bulk material handling. What is not common is a standardized proactive approach to reducing risk through the use of a defined risk assessment and solution implementation process.

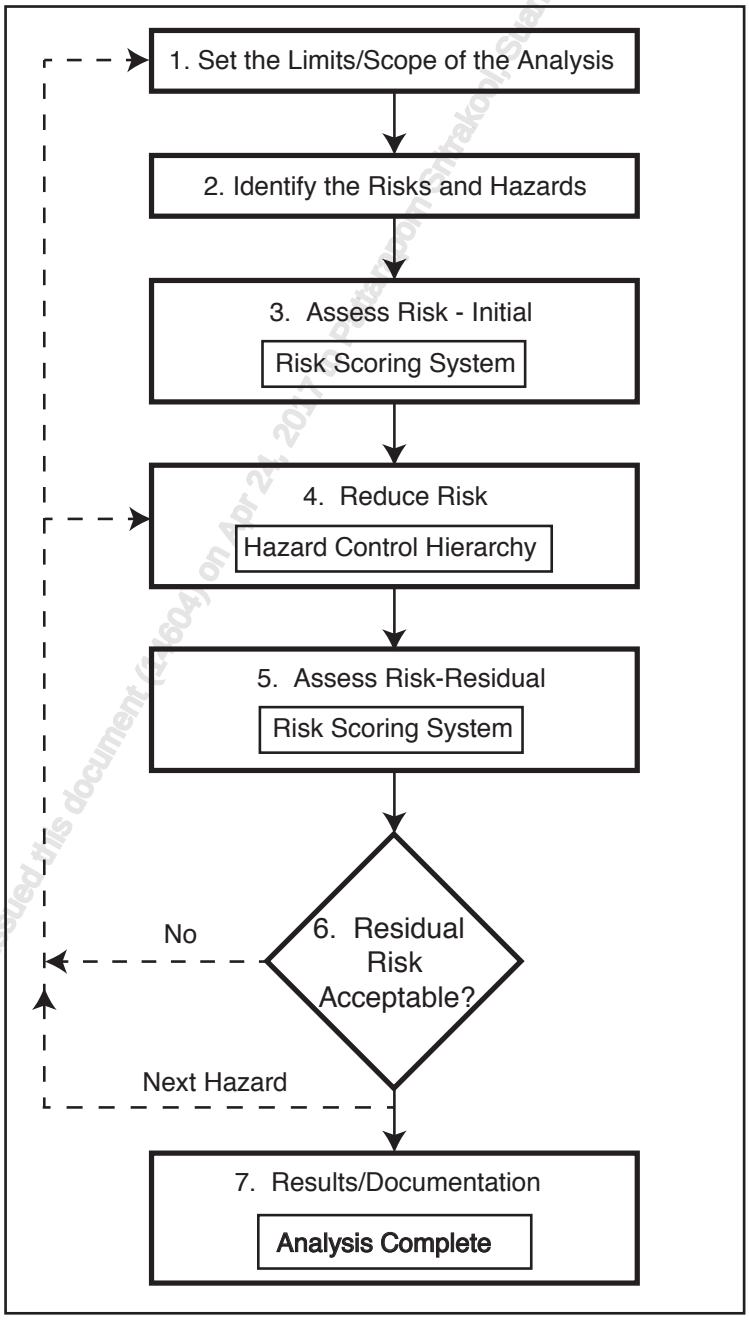

WWW.CEMANET.ORG has issued this document (A160-4) on Apr 24, 2017 to [illegible] for [illegible] Standard [illegible]

Figure 14.32
General risk assessment process

There are many terms used interchangeably with the term Risk Assessment. Risk Assessment in this book is defined as the process of reducing the probability and severity of harm to people, and/or the environment and/or property to an acceptable level through the use of a defined process. A defined risk assessment procedure is useful in identifying risks that can be mitigated at each stage of use of a product or service. Mitigating hazards by design or eliminating them by substitution is recognized as the most effective way to improve safety.

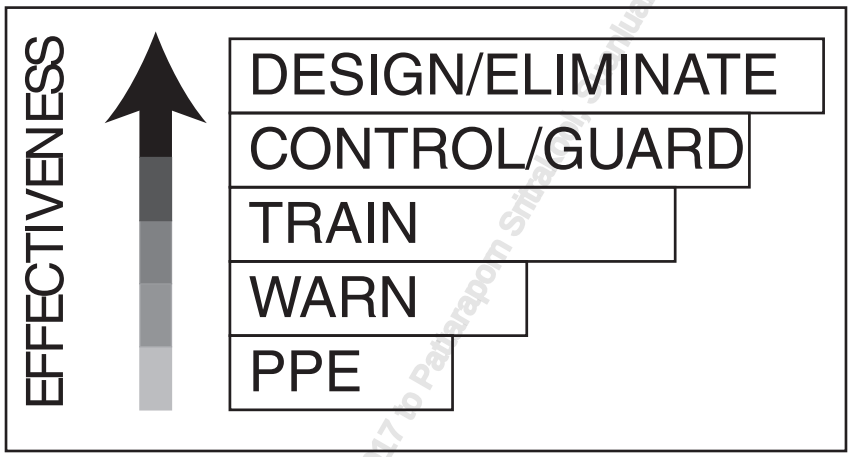

Figure 14.33
Effectiveness of risk mitigation methods

The risk assessment described here focuses eliminating risk through mitigating the hazard or hazardous situation as it applies to systems, components and activities. Risk assessment is most commonly done by a team of stakeholders and usually results in identifying and reducing risks that the manufacturer, engineer, supervisor or worker may not identify or consider a serious hazard by themselves.

Each stakeholder at each stage of use of a product, system or service should preform a risk analysis. For example the designer or manufacturer can assess risk on the equipment or activity as they foresee the reasonable intended use of their product or service. However, the designer or manufacturer often does not control the installation, integration of their equipment into a process, training on proper use or maintenance or; the use of product or service on site, requiring further hazard identification and mitigation. Job Safety Analysis is a form of risk analysis that is most effectively completed by those at the point of installation, use or maintenance. It is often said that the fact that risk analysis is done is more important than which risk assessment format that is used.

At the time of printing are no government mandated standards that must be used for risk reduction in general bulk material handling. Therefore, it is up to each stakeholder's management to establish and implement a risk reduction methodology. In this book ANSI B11 2000 TR3 and MIL-STD 882 are used as reference documents for developing an example risk assessment methodology with additional suggestions for considering risks unique to bulk material handling by conveyor belt.

Acceptable Risk

The goal of a risk assessment is to reduce residual risks after analysis and implementation, to an acceptable level. Zero risk is impossible to obtain. Acceptable risk is a subjective concept which is defined by the risk assessment team often within established policy. Many risk assessment systems use the concept of residual risk as being acceptable if it meets a test of "As Low As Reasonably Possible", ALARP.

Determining ALARP is almost always a subjective judgment made by a team formed from a range of skill sets within the context of their operation. If one member or group of the team dominates the judgment on a particular point the result may not be reasonable so it is important to have a cross section of skill sets in the risk assessment team with a method of reaching consensus. The team should reach some definition of ALARP risk before starting the process. It is not necessary to address every risk that the team identifies as some risks may be so remote or redundant that it would be a diversion from resolving the significant risks.

Minimal risks that evolve into significant risks in the future or new risks that are introduced can be identified if risk assessment is considered a continuous improvement activity and performed periodically. The absence of qualitative data in ranking risk is not as important as the team's perception of the risk and their solution because data on specific hazards is almost never available for bulk material handling operations and those involved daily with the risk are often the most expert in resolving them. Teams can always seek outside expert advice if they become deadlocked or need specific expertise.

MIL-STD 882

MIL-STD 882 can be downloaded for free and used as guide. There are many other risk assessment approaches readily available. There is no right or wrong approach. The important point is to have a defined system that works for your operation and make it part of your safety culture. The basic approach in all risk assessment systems is to list all of the hazards, hazardous conditions or at risk behaviors that the team can readily identify. Brainstorming techniques are useful in this part of the process. Once a list is generated, each hazard is rated for severity and probability of occurrence. The combination of severity and probability is given a rank. Alternative means of reducing the risk are evaluated and scored until the ranking is within the team's ALARP definition. In some cases the risk can not be reduced to an ALARP level through design or substitution, then alternate approaches such as additional training or engineering controls can be used to mitigate the risk.

Description	Category	Definition
Catastrophic	**I**	**Could result in death or permanent total disability, loss exceeding $1,000,000 or irreversible severe environmental damage that violates law or regulation.**
Critical	**II**	**Could result in permanent partial disability, injuries or occupational illness that may result in hospitalization of at least three personnel, loss exceeding $200,000 but less than $1,000,000 or reversible environmental damage causing a violation of law or regulation.**
Marginal	**III**	**Could result in injury or occupational illness resulting in one or more lost work day(s), loss exceeding $10,000 but less than $200,000 or mitigatible environmental damage without a violation of law or regulation where restoration activities can be accomplished**
Negligible	**IV**	**Could result in injury or illness not resulting in lost work day, loss exceeding $2,000 but less than $10,000 or minimal environmental damage not violating law or regulation.**

Table 14.34
Severity categories (adapted from MIL-STD 882)

WWW.CEMANET.ORG has issued this document (9/6/2011 7:44:42 AM) to Patterapon Sirikongsri (Siamquarry) - Unlimited

Obviously, for the hazards identified in the assessment to be effectively mitigated, the solutions must be implemented for them to become effective. Documenting the results is strongly suggested so that improvements can be monitored and goals for mitigation of risks adjusted if necessary. The most effective systems implement changes as quickly as possible, often through empowerment of the risk assessment team to take immediate action.

Description	Category	Probability of a Specific Hazard Created by an Individual Item or Event
Frequent	A	Likely to occur often in the life of an item Event could be continuously experienced
Probable	B	Will occur several times in the life of an item Event will occur frequently
Occasional	C	Likely to occur some time in the life of an item Event will occur several times
Remote	D	Unlikely to occur in the life of an item, Event unlikely, but can reasonably be expected to occur
Improbable	E	So unlikely, it can be assumed occurrence may not be experienced Event unlikely to occur, but possible

Table 14.35
Suggested Mishap Probability Levels (adapted from MIL-STD 882)

Probability	Severity			
	Catastrophic (I)	Critical (II)	Marginal (III)	Negligible (IV)
Frequent (A)	1	3	7	13
Probable (B)	2	5	9	16
Occasional (C)	4	6	11	18
Remote (D)	8	10	14	19
Improbable (E)	12	15	17	20

Table 14.36
Mishap risk assessment matrix results with numerical values (adapted from MIL-STD 882)

NO COPYING ALLOWED. Licensed to this document (1494) on Aug 24, 2015 to Purchaser: Smithson, Stanley (), , Thailand

Examples of Hazards and Hazardous Situations in Bulk Material Handling

ANSI B11 2000 TR3 Annex A lists typical hazards and hazardous situations in the design, installation, use and maintenance of machine tools. There are hazardous and hazardous situations specific to typical bulk material handling systems, components and maintenance that need to be identified in addition to those listed in ANSI B11 2000 TR3. Some of these hazards are uniquely found with bulk belt conveyor systems, components and maintenance. Each design firm, manufacturer, installer, user and maintenance operation should develop a check list of hazards and hazardous situations unique to their situation. The following is a guide and is not all inclusive. It is intended to assist in identifying hazards and hazardous situations on and around conveyors and the associated equipment and components and can be used to supplement lists of hazards specific to an application. Regulations pertinent to the specific industry are another source of specified risks that can be added to check lists to customize the risk assessment process.

Ref #	Hazard or Hazardous Situation, Item or Event
1.0	Belt
	Protrusions, flaps or long sections of ripped conveyor belt
	Mechanical splices with protruding or loose components
	Hypnotic effect of moving belt and rotating components
	Walking on stationary or moving belt
	Riding on belt
	Stored energy, potential energy in belt, slack in the belt
	Static charge build up
	Sloped belt or belt splice failure
	Belt mistracking
	Belt fire
	Moving belt with no motion markers
	Stored energy in pulling cable during belt installation
	Failure of belt clamp during installation or splicing
	Energy stored in belt and components during clearing jams by jogging the belt
2.0	Bulk Material
	Respirable dust
	Explosive dust
	Spontaneous combustion
	Large lumps falling or projected from conveyor
	Potential energy of material accumulated on stationary belt, structure or in bins
	Caustic or acidic bulk materials
3.0	Site Conditions
	Uneven and/or unpaved surfaces
	Falling return idlers or components
	Underground mining hazards
	Waste water and drainage systems
	Wet or slippery surfaces
	Fire from accumulation of combustible fines
4.0	Installation or Integration and Start up
	Incomplete specifications or instructions
	Missing components or software for system or process
	Installation labor not trained on specific requirements
	Wrong components delivered or parts missing
	Scheduling conflicts
	Run in issues with components or control systems
	Test bulk material not same as production material

www.CEMANET.ORG Non-commercial use only Apr 24, 2017 to Beijing Sinoma Sitrakodi, Shandong, Mainland

5.0	Components
	Frictional heating from frozen component against moving belt
	In running nip points between belt and rotating components
	Crushing between moving and fixed components
	Applying belt dressing to drive pulley
	Falling gravity takeup
	Backstop or holdback failure
	Hot surfaces - gearboxes and motors
	Significant quantity of bearings
	Magnetic fields from tramp metal magnets
	Radiation exposure from nuclear measuring devices
6.0	System
	Elevated systems and walk ways
	Distance between loading, discharge and controls
	Tunnels and enclosed galleries with limited space between belt and access
	To crossover or crossunder conveyor
	Moving transfer points
	Plugged chutes
	Open top hoppers
	24/7 operation
	Portable conveyors
	Belt tracking
7.0	Maintenance
	Excessive lubricant accumulation from purging bearings
	Welding and cutting
	Manual lifting and positioning of heavy components in restricted spaces
	Confined spaces
	High pressure fluids and gasses used
8.0	Controls
	Proper interlocking
	Pull cord switches
	Remote automated sequential starting
9.0	Cleaning
	Strains, slips and falls
	Spillage and carryback accumulates quickly
	Build up of bulk materials on rotating components or tracks
	De-icing
	Long handled and sharp tools
	Compressed air or high pressure water used for cleaning

www.CHAINEDGE.com Assistant Document (14504) on Apr 24, 2017 to Saranyapon Sirisakool, Suanluang, , Thailand

10.0	**Environment**
	Exposed to weather extremes
	Noise and dust
	Low light conditions
11.	**Stockpiles**
	Mobile equipment traffic patterns
	Highwall failures
	Crusted bulk material with opening or void below
	Open unguarded draw down into feeder
	Stockpile level control failure
12.	**Guarding**
	Guard opening to hazard distance
	Guard too heavy or has sharp edges
	Unguarded portions of conveyor by rule i.e. skirtboard seal and belt
13.	**General**
	Lock Out Tag Out Try Out procedure
	Loose clothing
	Heavy equipment with limited driver visibility
	High voltage motors and electromagnetic fields

Table 14.37
Typical hazards and hazardous situations unique to bulk belt conveyor, systems, components and activities

Table 14.37 is provided as a suggested starting point for developing a list of hazards that are unique to bulk material handling by belt conveyor and is not intended to be an all encompassing list. This list should be used as a supplement to other commonly available lists such as those in ANSI B11 2000 TR3 and MIL-STD 882 and modified for each specific bulk material handling operation. There are often many types of process equipment and haulage systems in the proximity of belt conveyors that potentially represent significant hazards. The hazards they present should be considered in addition to simply analyzing the movement and storage of the bulk solid on a belt conveyor.

Example: Severity vs. Probability ALARP Matrix

Management forms a risk assessment team and provides some guidelines. Management sets the as low as reasonably possible risk level as shown in tables 14.38 and 14.39. The team determines that they will use a combination number and letter ranking rather than all numerical values as shown in Table 14.36. For example, a hazard or work practice that creates a hazardous situation with consequences judged by the team to have marginal consequences (Marginal III) and is judged by the team to probably occur (Probable (B)) over the life of the equipment would be ranked III-B.

www.CEMAT.ORG Issued to: Nisit Jumdet (1450400) Apr 24 2017 to Sirapop Sirakoot Suanluang, , Thailand

Probability of Event "X" Occurring	Severity of consequences of event "X" Occurring (Table 14.34)			
	Catastrophic (I)	Critical (II)	Marginal (III)	Negligible (IV)
Frequent (A)	I-A	II-A	III-A	IV-A
Probable (B)	I-B	II-B	III-B	IV-B
Occasional (C)	I-C	II-C	III-C	IV-C
Remote (D)	I-D	II-D	III-D	IV-D
Improbable (E)	I-E	II-E	III-E	IV-E

Table 14.38
Hazard risk assessment ranking

Management determines that for the matrix in Table 14.38 the following criteria apply:

Risk Ranking Scores	Action
I-A, I-B, I-C, II-A, II-B, III-A	Unacceptable: eliminate, substitute or redesign
I-D, I-E, II-C, II-D, III-B, III-C, IV-A, IV-B	Undesirable: review risk reduction plan with management
II-E, III-D, III-E, IV-C, IV-D, IV-E	Acceptable: management review if cost is > $10,000

Table 14.39
Management criteria for ALARP risk acceptance

As Figure 14.32 shows, risk reduction or elimination is an iterative process. In this hypothetical scoring system the team has, in effect, been tasked with reducing risks into the shaded area of Table 14.38 and given authority by management to incur up to $10,000 to reduce identified risks within the scope of the assignment.

The team decides to focus on the risks associated with the common practice in the plant of taking a short cut by crossing under a conveyor. The particular crossing is located where it is necessary for some workers to duck to avoid contact with the structure moving belt. A return roller is located nearby but is 7 ft (2.1 m) from ground level.

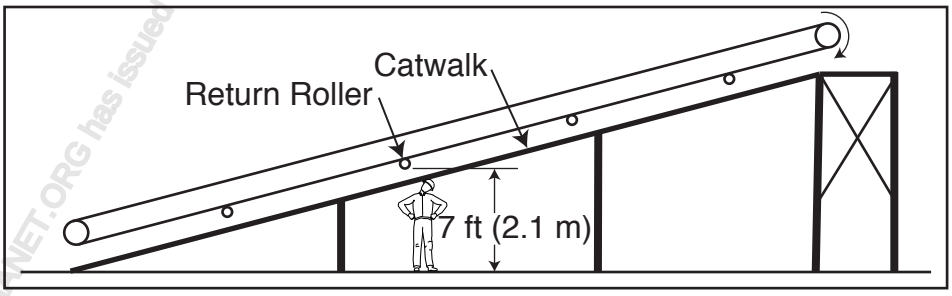

Figure 14.40
Conveyor existing layout for risk assessment example

The team developed a list of potential hazardous situations using brainstorming techniques and ranked them by severity and probability. It is more important that the hazard list identify the most consequential hazardous conditions and possible outcomes than it is to list every possible scenario. If good safety and design review processes are in place, there will be additional risk analysis reviews before the teams final proposal is accepted and implemented.

www.CEMENET.ORG has issued this document (1406) on Apr 14, 2014 to Patarapol Sritrakool, [illegible], Thailand

	Hazard	Resulting Event	Severity	Probability
1	Carryback accumulation under conveyor	Slip on carryback - possible back injury	II	A
2	Carryback accumulation under conveyor	Trip on carryback - reach for hand hold -possible laceration or fall	II	A
3	Carryback accumulation under conveyor	Walk on pile - return roll no longer guarded by position - Nip point exposure	I	C
4	Low clearance catwalk structure	Hit Head - laceration possible if not wearing hard hat	III	B
5	Traffic along both sides of conveyor	Walk into Traffic without yielding - pedestrian/vehicle accident	I	D
6	Belt overloaded or mistracking	Falling material from above - injury from falling material and additional accumulation causing slips and trips	II	C
7	Poor visibility at night or severe weather	Slip or trip possibility of increased pedestrian/vehicle accident	I	C

Table 14.41
Example risk assessment severity and probability list

Comparing the teams assessment with managements ALARP matrix. The team concludes that the crossunder location needs to be moved and redesigned.

Probability of Event "X" Occurring (Table 14.34)	Severity of consequences of event "X" Occurring (Table 14.35)			
	Catastrophic (I)	Critical (II)	Marginal (III)	Negligible (IV)
Frequent (A)	I-A	II-A	III-A	IV-A
Probable (B)	I-B	II-B	III-B	IV-B
Occasional (C)	I-C	II-C	III-C	IV-C
Remote (D)	I-D	II-D	III-D	IV-D
Improbable (E)	I-E	II-E	III-E	IV-E

Table 14.42
Example risk assessment severity and probability ratings.

The team recommends that the travel paths be controlled using handrails, a formal crossunder with spill protection be installed, traffic control signs and guard rails installed and the area lighted at night. The result will be a minor inconvenience to workers traveling under the conveyor but it greatly reduces the severity and probability of accidents.

The team works with the maintenance department and comes up with a plan for making the changes taking into account the needs of all that would use the crossunder and re-evaluates the severity VS. probability matrix with the conclusion that their re-design meets managements requirement of ALARP risk. The process is documented and the changes are implemented.

www.CEMAGREF.fr has issued this document (2.0A) on Apr 21 2011 to Patrick Hamelin (Individual Purchase)

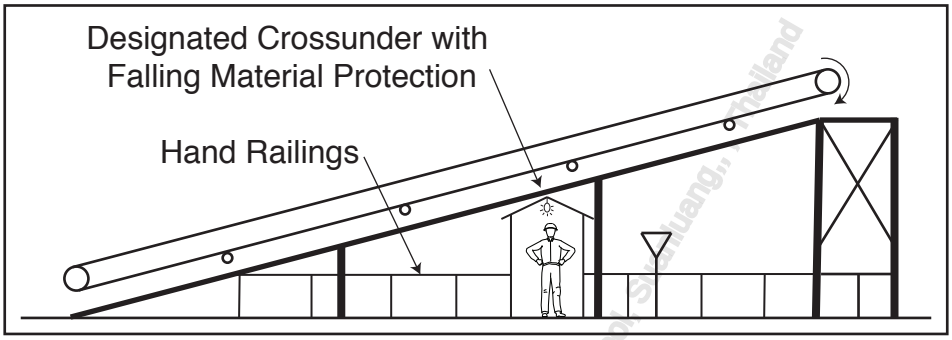

Figure 14.43
Example risk assessment redesign to reduce severity and probability

WWW.CEMANET.ORG has issued this document (14604) on Apr 24, 2017 to Pattarapom Sirakoon, Saraburi, Thailand

TROUBLE SHOOTING CONVEYOR PROBLEMS

Trouble shooting conveyor problems requires experience and knowledge. Many conveyor components are built and selected according to CEMA standards for their appropriate application and will perform well for their intended use if properly installed and maintained. Most operational problems are created by abuses of the system or attempts to cure the symptoms rather than the root causes of the problems. There are well established installation, operating and maintenance practices for conveyors that when followed will allow a conveyor to operate virtually trouble free. Other problems with conveyors may be related to the wear of components or changes in the bulk material properties.

As the complexity of conveyor designs and controls increase there are technical problems that can only be prevented in the design stage or solved in the field with the help of expert advice. A transient vibration in long overland conveyors is one example of a phenomenon that requires expert advice. Many CEMA member companies provide trouble shooting services and training related to the conveyor industry in general as well as in their products and services.

CAUTION:
Brakes and Backstops should never be used as the only method of holding a belt during maintenance or cleaning. If working on a belt or near pinch points make sure the potential (stored)energy of the belt and load has been neutralized with belt clamps or other suitable means with sufficient range to accommodate the belt stretch that may be released.

Problem or Symptom	Reason Code in Probable Order of Occurrence					
Belt runs off at tail pulley	7	15	14	17	21	34
Entire belt runs off at all points of the line	26	17	15	21	4	16
One belt section runs off at all points on the line	2	11	1	34		
Belt runs off at head pulley	15	22	21	16	34	
Belt runs to one side throughout entire length at specific idlers	15	16	21	34		
Belt slip	19	7	21	14	22	
Belt Slip on starting	19	7	22	10		
Excessive belt stretch	13	10	21	6	9	
Belt breaks at or behind fasteners or fasteners tear loose	2	23	13	22	20	10
Vulcanized splice separation	13	23	10	20	2	9
Excessive belt wear including rips, gouges, ruptures and tears	12	25	17	21	8	5
Excessive belt bottom cover wear	21	14	5	19	20	22
Excessive belt edge wear, broken edges	26	4	17	8	1	21
Belt cover swells in spots or streaks	8					
Belt hardens or cracks	8	23	22	18		
Belt covers become checked or brittle	8	18				
Longitudinal grooving or cracking of belt top cover	27	14	21	12		
Longitudinal grooving or cracking of belt bottom cover	14	21	22			
Belt Fabric decay, carcass cracks, ruptures, gouges (soft spots in belt)	12	20	5	10	8	24
Belt Ply separation	13	23	11	8	3	
Build up on Bend Pulleys and return idlers	32	33	8	22		
Spillage of fines and small particles in loading area	27	28	17	12	30	
Spillage of larger particles and lumps along conveyor	15	29	30	31	35	

www.beltconveyorbook.com document (no DRM) on Apr 24, 2017 by pattarapom.ernarong@gmail.com, Subscriber, Thailand

Problem or Symptom	Reason Code in Probable Order of Occurrence					
Plugged Chutes	35	33	34	31		
Damaged to accessories in contact with the belt	31	2	11			
See Table 14.45 for possible solutions						

Table 14.44
Belt conveyor common problems or symptoms

	Probable Cause	Possible Solution
1	Belt bowed	Avoid telescoping belt rolls or storing them in damp locations. A new belt should straighten out when "broken in" or it must be replaced.
2	Belt improperly spliced or wrong fasteners	Use correct fasteners. Re-tighten after running for a short while. If improperly spliced, remove belt splice and make new splice. Set up regular inspection schedule.
3	Belt speed too fast	Reduce belt speed.
4	Belt strained on one side	Allow time for new belt to "break in." If belt does not break in properly or is not new, remove strained section and splice in a new piece.
5	Breaker strip missing or inadequate	When service is lost, install belt with proper breaker strip.
6	Counterweight too heavy	Recalculate weight required and adjust counter-weight accordingly. Reduce takeup tension to point of slip, then tighten slightly
7	Counterweight too light	Recalculate weight required and adjust counter-weight or screw takeup accordingly.
8	Damage by abrasives, acid, chemicals, heat, mildew, oil	Use belt designed for specific condition. For abrasive materials working into cuts and between plies, make spot repairs with cold patch or with permanent repair patch. Seal metal fasteners or replace with vulcanized step splice. Enclose belt line for protection against rain, snow, or sun. Don't over-lubricate items.
9	Differential speed wrong on dual pulleys	Make necessary adjustment.
10	Drive under-belted	Recalculate maximum belt tensions and select correct belt. If line is over-extended, consider using two-flight system with transfer point. If carcass is not rigid enough for load, install belt with proper flexibility when service is lost.
11	Edge worn or broken	Repair belt edge. Remove badly worn or out-of-square section and splice in a new piece.
12	Excessive impact of material on belt or fasteners	Use correctly designed chutes and baffles. Make vulcanized splices. Install impact idlers. Where possible, load fines first. Where material is trapped under skirts, adjust skirtboards to minimum clearance or install cushioning idlers to hold belt against skirts.
13	Excessive tension	Recalculate and adjust tension. Use vulcanized splice within recommended limits
14	Frozen idlers	Free idlers. Lubricate. Improve maintenance. (Don't over- lubricate)

www.CEMANET.ORG has licensed this document (14604) on Apr 24, 2017 to [illegible] Suanluang, , Thailand

	Probable Cause	Possible Solution
15	Idlers or pulleys out-of-square with center line of conveyor	Realign. Install limit switches for greater safety.
16	Idlers improperly placed	Relocate idlers or insert additional idlers spaced to support belt.
17	Improper loading, spillage	Feed should be in direction of belt travel and at belt speed, centered on the belt. Control flow with feeders, chutes, and skirtboards.
18	Improper storage or handling	Refer to the manufacturer for storage and handling tips.
19	Insufficient traction between belt and pulley	Increase wrap with snub pulleys. Lag drive pulley. In wet conditions, use grooved lagging. Install correct cleaning devices for safety. See item 7.
20	Material between belt and pulley	Use skirt-boards properly. Remove accumulation. Improve maintenance.
21	Material build-up	Remove accumulation. Install cleaning devices, scrapers, and inverted "V" decking. Improve housekeeping.
22	Pulley lagging worn	Replace worn pulley lagging. Use grooved lagging for wet conditions. Tighten loose and protruding bolts.
23	Pulleys too small	Use large-diameter pulleys
24	Radius of convex vertical curve too small	Increase radius by vertical realignment of idlers to prevent excessive edge tension.
25	Relative loading velocity too high or too low	Adjust chutes or correct belt speed. Consider use of impact idlers.
26	Side loading	Load in direction of belt travel, in center of conveyor.
27	Skirts improperly placed or not maintained	Install skirtboards so that they do not rub against the belt.
28	Wear liners missing, worn or improperly installed	Replace wear liners so the bottom edge is lined up and gradually relieving in direction of belt travel
29	Belt overloaded	Operate belt feed system at design capacity or less
30	Excessive belt sag	Recalculate take up tension. Install belt support systems or reduce idler spacing
31	Belt rolls Back after shut down	Install or repair belt holdback or brake
32	Insufficient number of belt Cleaners or lack of maintenance	Install additional belt cleaners or maintain existing cleaners more frequently
33	Bulk material properties have changed	If a permanent change in bulk materials, redesign chutes, belt cleaners and re-evaluate conveyor speed, tension and belt type.
34	Emergency repairs or actions	Repair temporary fixes. Install accessory items to automatically activate. Avoid heating or hammering of hoppers, chutes and components.
35	Monitoring devices inoperable	Repair or activate monitoring devices.

www.CEMAT.org restricted document (14604) 04 April 24, 2017 to Pattarapom Sirisoot Siam Cement Group, Thailand

Table 14.45
Possible causes and probable solutions to common conveyor problems

Introduction Pg 676
Belt Takeups Pg 676
Belt Stretch or Elongation Pg 676
- Elastic Stretch
- Constructional Stretch
- Permanent Length Change

Takeup Movement Pg 676
Manual Takeups Pg 677
- Types of Screw Takeups
- Manual Takeup Location
  - Guarding Manual Takeups

Automatic Takeups Pg 679
- Guarding Automatic Takeups
- Recommended Takeup Movement
- Automatic Takeup Location
- Automatic Takeup Force Requirements
- Automatic Takeup Sensitivity
- Takeup Tension Deadband
- Active Takeup Sensitivity
- Reaction Time
- Vertical Gravity Takeups
- Horizontal Takeups
  - Horizontal Gravity Takeups
  - Active Powered Takeups
  - Guarding Active Powered Takeups
- Wire Rope Friction
  - Wire Rope Vertical Takeup Example
  - Takeup Structure Considerations

Takeup Safety Devices Pg 689
- Takeup Safety Device Example

WWW.CEMANET.ORG has issued this document on Aug 22, 2017 to Kittikam Sritrakool, Suanluang, , , Thailand

INTRODUCTION

A takeup is an assembly of structural and mechanical parts which provides the means to maintain the minimum required belt tension for the drive, to compensate for belt stretch and provide belt travel for splicing.

BELT TAKEUPS

All properly designed belt conveyors require the use of some form of takeup device for the following reasons:

- To insure the proper amount of slack side tension, T_2, at the drive pulley to prevent belt slip.
- To insure proper belt tension at loading and other points along the conveyor (necessary to prevent loss of troughing contour of the belt between idlers, thus avoiding spillage of the material from the belt).
- To compensate for changes in belt length due to stretch.
- To allow belt storage for making replacement splices (without such storage, small sections of new belt would have to be added, requiring two splices for each splice repair).

BELT STRETCH

Any conveyor can be expected to have stretch in the conveyor belt. Some belt stretch is temporary, often due to changes in the belt tensions caused by starting or braking conditions, or caused by changing thermal conditions. Other belt stretch is permanent, caused by elongation in the fibers and fabrics used in the belt construction. Takeup systems allow the conveyor designer to compensate for these changes in overall belt length without having to cut sections out of the belt. A conveyor belt can be expected to have several types of stretch or elongation:

Elastic Stretch Or Elongation

This is that part of a belt's stretch which occurs during changes in belt tension, including starting acceleration or braking deceleration. This stretch is almost entirely recovered when the applied pull or stress is removed.

Constructional Stretch

This is due more to the type of fabric weave than to the textile material used. In a conventionally woven fabric, the warp strands which are crimped tend to straighten out as the load is applied. This results in belt growth, a portion of which is non-recoverable.

Permanent Length Change

This includes changes in length caused by elongation in the basic fiber structure. It also includes the portions of the elastic stretch and constructional stretch which are non-recoverable.

TAKEUP MOVEMENT

The required length of takeup movement depends upon several factors, including:

- Type of starting or braking: Across-the-line starting or uncontrolled braking requires considerably more allowable takeup movement than controlled acceleration or deceleration.
- Frequency of starts and stops of a fully loaded belt

www.CEMA.ORG has granted this document (14604) on 10/27/2017 to Patcharaporn Sharp of Suphuang, , Thailand

- Whether a run-in period with metal fasteners can be utilized. If so, this would conveniently allow for removal of any non-recoverable length change before making a final vulcanized splice.
- Stretch and elongation characteristics of the belting being used
- Running tensions of the conveyor system

The takeup should provide sufficient movement to accommodate acceleration or deceleration surges without having the takeup strike against its stops. It should also allow for some "live" storage of belting so that, in case of an accident, the belt can be repaired (or a damaged portion removed) without requiring two splices. The design of the takeup system should ensure its smooth movement and even tension across the face of the belt. In addition, takeup movement should provide for changes in belt length due to stretch or shrinkage.

Care must be taken to ensure the takeup's even movement. It is important that the movement be balanced across the width of the belt to provide even tension on the belt and maintain belt alignment in all three planes. For that reason the takeup must remain free to function without accumulations of fugitive material or damage, which could interfere with movement but still move parallel to the belt centerline.

There are two basic types of takeup systems used on belt conveyors: Manual Takeup Systems and Automatic Takeup Systems.

MANUAL TAKEUPS

Manual takeups, or fixed takeups, are used where an automatic takeup is not practical because of space limitations, for cost considerations, or in the case of relatively short, light-duty belt conveyors, where takeup considerations are not as critical. As discussed in Chapter 6, they function by pre-stretching the belt to a fixed length. Therefore, the belt tension at the takeup varies with additional stretch from operating tension changes.

One limitation of many manual takeup systems is the frequency of manual re-tensioning. This creates a situation where the belt is either tensioned too tight or too loose. In addition, many manual takeup devices do not offer a way to monitor belt tension, so the operator does not really know how much belt tension there is. Because of this, some conveyor designers will apply a service factor of 1.3 to 1.5 when calculating the belt tensions to compensate for the additional tension that commonly occurs with manual takeup systems.

These issues can be addressed with certain types of hybrid takeups. These systems, often of a telescoping tube design, employ compression springs or hydraulic or pneumatic systems that not only keep constant tensions on the belt, but also allow for measurement of belt tensions and provide a means of adjustment. Such manual takeups permit monitoring of belt tensions and reduce the labor necessary to create proper tensions.

In high-tonnage inclined conveyors, such as stackers, the use of manual takeups for any length of belt is not normally recommended. Such cases should be referred to a CEMA Member.

The most commonly used manual takeup is the screw takeup, which is illustrated in Figure 15.1. Other common types include hydraulic, ratchet and jack-operated takeups. Imperial dimensioned screw takeups are generally available in 3 to 60 inch travel ranges, with 12, 18, 24, 30, and 36 inches of takeup travel being the most common. Metric dimensioned takeup units are generally available in 100 to 900 mm travel ranges in increments of 100 mm.

www.CEMANET.ORG has issued this document (1405) on Apr 5 2017 to Patcharapim Sirakoolsirivej , Thailand

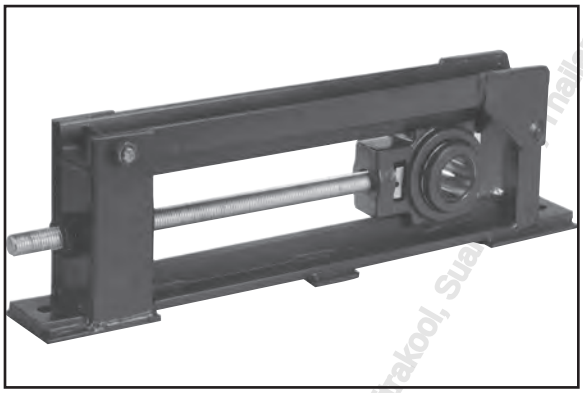

Figure 15.1
Manually adjusted screw takeup

Manual screw takeups require a skilled operator to observe when additional takeup is required, and then adjust the takeup just to the point where the proper tension is applied to the belt. Most manual screw takeups generally do not have a gauge or index to guide the operator in this tensioning process; however systems employing compression springs or hydraulic adjusting movements often do. Take care to apply the proper tension because over tensioning has the potential to cause component failures in the conveyor. Pulleys are especially susceptible to over tensioning.

With new belts, it is necessary to provide a large amount of slack-side tension to pre-stretch the belt. This prevents slack in the belt from accumulating behind the drive pulley and causing belt slippage when the conveyor operates. With purely manual takeups, the operator must use good personal judgment in making the suitable adjustment.

Types of Screw Takeups

There are a variety of screw takeup styles available from a number of manufacturers. These styles include:

- Top mount screw takeup frames are typically of a welded and bolted steel construction, with an adjusting screw that is protected under an angle iron member. They typically accept a variety of bearing types, including pillow block bearings, have bore sizes up to 12 inches (300 mm), and are available in various travel lengths.
- Center pull takeup frames are of welded steel construction with reinforced steel end plates. On some types, a hinged cap rail allows access for bearing installation. They require a special bearing housing available from most major bearing manufacturers.
- Top angle takeup frames are of welded steel construction, with the adjusting screw normally plated to resist corrosion. The screw is protected from falling material by the top rail. Top angle bearing housings have a brand-specific geometry, so frames must be specific. They accept a variety of manufacturer's takeup bearings, with a typical bore range of 1-3/4 through 7 inches (44 through 178 mm). The shape of the bottom support can vary from round to rectangular.
- Wide and narrow slot, side mount takeup frames with ball bearings, provide a compact solution to belt tensioning. They accept a variety of manufacturer's bearing cartridges, with a bore range of 1/2 through 3-1/2 inches (13 through 89 mm).
- Telescoping tube takeup frames utilize an adjusting screw enclosed within two or more telescoping steel tubes. Pillow block bearings are typically mounted to the inner tube that telescope out of the outer tube via the action of a protected adjusting screw. These frames accept a wide variety of pillow block bearings, with a bore range of 1/2 to 7 inches (13 through 178 mm).

www.SKF.COM Reserved. Is subject to (1460) 0 Apr 2014 to Patrapom Shtrakool, Suan [illegible] Thailand

Manual Takeup Location

Manual screw takeups normally are located at the opposite end of the conveyor from the drive. This is the most convenient and least costly arrangement as it involves no extra pulleys. If required it is possible to locate manual takeups elsewhere on the return run of the belt conveyor.

Guarding Manual Takeups

Guarding of manual takeups depends on location and exposure of the worker to hazards. Manual takeups are often used to adjust the tracking of the belt. While this practice is not recommended, as it changes the belt tension often in uneven amounts to change belt tracking, adjustments are often made with the belt running. Since manual takeups are most commonly located at the tail of the conveyor the worker needs to be protected from accidental contact with the belt, tail pulley, tail pulley shaft, zeros speed switches, the belt and pulley nip points and other hazards at the tail of the conveyor. When located on the return run they often incorporate bend pulleys which introduce additional hazards that must be guarded.

AUTOMATIC TAKEUPS

Automatic takeups are the more desirable type for use on any belt conveyor, especially belt conveyors over 100 feet (30 m) in length. They automatically compensate for belt stretch under varying operating conditions and thereby provide the lowest tension around the belt path. This is discussed further in Chapter 6. They can be installed horizontally, vertically, or on an incline. They can either act passively with gravity or actively with controlled power provided by hydraulic, electric, or pneumatic means. The most common type is the gravity takeup that utilizes a counterweight hanging from a takeup pulley carriage. Other types of automatic takeups are used when special conditions, such as space limitations or portability, are involved.

Hybrid takeup devices can also perform some of these same functions. Spring compression takeups can act as a shock absorber in the system, avoiding belt damage during periods of transient loading, such as at start-up. They are often available with springs rated up to 5,000 lb/in (89.5 kgf/mm). Hydraulic telescoping tube takeups (Figure 15.9) can also be made automatic for certain applications through a feedback loop system that constantly monitors belt tension. In smaller systems, hydraulics may be replaced with pneumatic pressure. Automatic takeups must be properly engineered to avoid creating other problems in the conveyor system such as mistracking, pulley wear and belt damage. Contact a CEMA Member company for assistance when considering a powered automatic takeup system.

These devices provide the conveyor user with the ability to:

- Set the belt slack-side tension at a specific value
- Compensate for transient loads through their shock absorption capabilities
- Compensate for belt stretch

A wide range of mechanisms are used to move the takeup pulley to accommodate belt stretch and maintain a uniform tension. Their design must be compatible with the static and dynamic requirements of the conveyor system. The conveyor design should incorporate the operating characteristics of the takeup.

Guarding Automatic Takeups

Guarding of any automatic takeup is extremely important due to the unpredictable nature of movement and the forces and speeds that often develop. Both the travel path of the takeup and the area underneath

www.CEMANET.ORG This is copyrighted material (CEMA 604) of the Conveyor Equipment Manufacturers Association, , Telford

the takeup weight must be guarded. If wire rope systems are used, consideration must be given to guarding for normal wire rope movement and for the reaction of the wire rope should the wire rope or supporting sheaves fail. Consideration should be given to absorbing the kinetic energy of a falling takeup weight and for protecting the surrounding area from the potential of flying or falling debris.

Recommended Takeup Movement

Gravity takeup system movement or travel is determined by:

- The conveyor center-to-center distance
- The construction of the conveyor belt
- Environmental conditions
- Amount of belt storage required

The values for takeup movement listed in Table 15.2 are generally suitable for most conveyor applications and take into consideration the amount of takeup movement required for normal operation and, the position of the takeup when making the final splice. A reduction or increase in these values will depend upon factors which include environmental and operating conditions as well as belt selection. It is advisable to consult the manufacturer of the belt under consideration before takeup requirements are determined.

Type of Takeup and Belt Carcass Material in the Lengthwise Direction	Percent of Rated Belt Tension		
	100%	75%	50% or less
Manual Takeup			
Polyester	2.00%	1.75%	1.50%
Polyamide (Nylon)	3.50%	3.00%	2.50%
Glass (Fiberglass)	1.00%	0.75%	0.50%
Automatic Takeup			
Polyester	1.75%	1.50%	1.25%
Polyamide (Nylon)	3.00%	2.50%	2.00%
Glass (Fiberglass)	1.00%	0.75%	0.50%
Steel Cable	0.40%	0.30%	0.20%
Note: Takeup movement recommendation is based on the nominal center distance of the terminal pulleys not on overall belt length.			

Table 15.2
Recommended takeup movement as a percentage of belt length

Automatic Takeup Location

Automatic takeups may be located at any place in the return run of the belt conveyor. The prime consideration is where the automatic takeup will work best in relation to the drive, to keep belt tensions at a minimum. Other considerations, such as available space, maintenance conditions, and the economics of the location, should also be taken into account.

Generally, the most inexpensive location for an automatic takeup on short belts is at the tail of an inclined conveyor. At this point, no additional pulleys will be involved if the tail pulley is actuated horizontally to act as a takeup. On steeply inclined conveyors, the weight of the takeup pulley assembly and belt may provide sufficient slack-side tension to prevent drive pulley slippage, without the need for additional counter-weight; though belt sag requirements near the loading point should also be considered. Moving tail pulleys introduce other design issues, so this method is not commonly used in practice.

www.CEMA.org has issued this document (14604) on Apr 24, 2017 to Rajamangala Thanyaburi, Suanluang, , Thailand

On long, horizontal, or slightly inclined conveyors with head drives, the automatic takeup should be located near the drive, where it will react quickly enough to prevent slippage of the belt on the drive pulley during acceleration at startup. If the takeup is located elsewhere, its movement must be calculated to be sure that it exceeds the amount and rate at which the belt will be accumulated in the takeup. Refer to Chapter 6, for incorporating the effect of location into the belt tensions.

Various layout and operating issues often govern the takeup design. Vertical space available versus the takeup travel needed will often play a role with the decision on where and what type of takeup to use. Systems utilizing electric cable drum drives with tension sensing devices are often used in applications where vertical space is at a premium. When conveyors are designed to be moved as modules, independent, active, horizontal takeups are often used for simplicity and flexibility.

Automatic Takeup Force Requirements

An automatic gravity takeup must provide a force on the takeup pulley equal to twice the required belt tension, at the place where the takeup is installed. This force is often supplied by a counterweight composed of steel, cast iron, concrete, or some other heavy material equal to the force required. The force may be somewhat less or greater in magnitude or multiplied appropriately by the mechanical advantage of a system of ropes and sheaves.

To calculate the required force of the automatic takeup or the weight force of a gravity takeup, the following formula can be used:

$$W_g = \frac{2 \times T_{tu} + W_f - W_p}{R_1}$$

Equation 15.3
W_g, Automatic takeup force

Where:

W_g = Required force provided by the takeup

T_{tu} = Belt tension at the point where the takeup is located

W_f = $\frac{\text{Force to overcome friction of the takeup carriage, other frictional resistance or deadband}}{2}$

W_p = Component of weight force of takeup carriage, wheels, pulley, shaft, shaft, bearings, etc., acting in direction of resultant pulley load; where elements move horizontally, W_p becomes zero.

R_1 = Mechanical advantage ratio, if any mechanical advantage is provided.

When solving for T_{tu} from a given W_g, W_f can work to trap takeup force in the takeup system. In this case, make W_f negative. Wire ropes and their sheaves have similar frictional effect but can be more complicated to design as described under Wire Rope Friction.

In a hydraulically, electrically or pneumatically operated automatic takeup, the force is calculated with Equation 15.3. As with a gravity automatic takeup, the force should be adjustable to meet unforeseen operating conditions. This can be done by varying the hydraulic or pneumatic pressure to suit the actual operating conditions. Before adjusting automatic takeups the root cause of the problem must be found. Incorrect takeup tension can result in numerous operational and safety issues that may not be obvious. Contact a CEMA Member for assistance in resetting automatic takeup tension.

www.CEMANET.ORG file created/downloaded (14604) on Apr 24, 2017 to cavel (Intrako) (Stevens Eng., , Chile)

Automatic Takeup Sensitivity

An automatic takeup provides one important element of the control of the conveyor as a system of moving components. The movement, velocity and acceleration of each component with their damping and inertia properties are necessary to know how to successfully design takeups for large conveyors. In other cases, the inherent damping from belt movement friction and the response rate of common gravity takeups make automatic takeup design straightforward. Experience or analytical modeling is needed to know the appropriate design precautions and deadband and reaction time are key elements.

Takeup Tension Deadband

Deadband is the range of deviation or offset from ideal constant tension. In addition to the basic tension provided by the takeup, the W_f in Equation 15.3, provides a deadband which can be significant to the conveyor and the components because it both increases and decreases the possible belt tension depending on unpredictable sequence issues.

Active Takeup Sensitivity

A wide range of active takeup devices are and can be used to provide a constant force on the takeup pulley. Internal frictions in the mechanisms or in hydraulic cylinder seals will provide a similar effect as that discussed for sheaves. Active feedback from force or pressure sensors is often used. The effect is a range of possible tensions at the takeup pulley and therefore throughout the belt path.

Reaction Time

Delay time is another deadband that affects the actual tensions seen along the conveyor. This time delay develops from the speed of reaction and movement of an active takeup and the acceleration from zero speed of passive gravity designs. In addition, any tension or stretch correction can only be made after the tension change is seen at the automatic takeup. This time delay depends on the distance between the takeup and the drive or brake pulley, the takeup rate and on the belt wave speed discussed in Chapter 6. A belt takeup rate of 240 feet per minute (1.2 m/s) is typical for heavy conveyors.

The specific affect of these delays is difficult to predict with the simplified 'static' transient analysis but provides guidance for the proper location and rate of active tension change components. Alternately, a dynamic analysis may be appropriate.

Vertical Gravity Takeups

The vertical gravity takeup is the most simple and often the most effective and least expensive takeup for most conveyors. Not only is the weight relatively inexpensive but little mechanism is needed to provide proper function and the reaction speed is the acceleration of gravity.

www.CEMANET.ORG This is issued to document (Revision Apr 24 2017) Patarapom Sutawong, Suanluang, Thailand

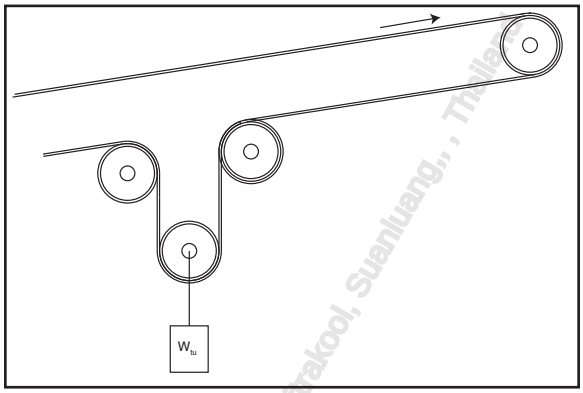

Figure 15.4
Schematic of an automatic vertical gravity takeup

Figure 15.4 shows a conventional vertical gravity takeup. This type takeup consists of a takeup pulley assembly, a framework to support the pulley assembly and allow for vertical motion and a takeup weight.

The primary need for the takeup is to provide smooth guided motion of the takeup pulley and weight without the possibility of locking up. A known and freely moving weight is key to constant tension and successful operation. Many takeup weights use angled top surfaces so that fugitive materials do not collect and cause higher than desired weights and therefore over tension. It is good practice to weigh the takeup at the time of conveyor commissioning to assure that the design tension is seen by the belt and to record this weight on the takeup.

Space and access can be design and safety challenges with vertical gravity takeups. The inertia of the takeup weight and belt length can contribute to dynamic problems requiring extra care in the conveyor system design including consideration for active control with brakes or similar controlled action.

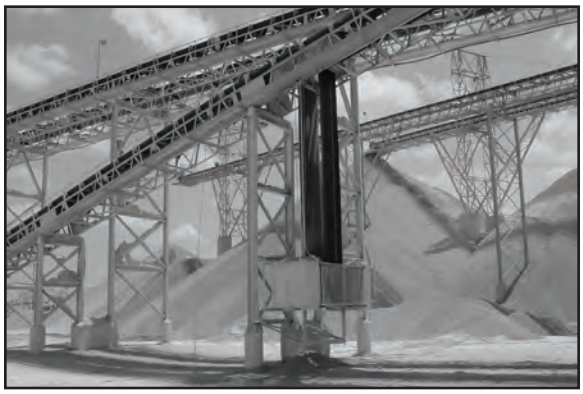

Figure 15.5
Vertical automatic gravity takeup on inclined conveyor

The belt tension produced by a vertical gravity takeup is a function of the "takeup weight." It should be noted that this weight consists of the weight of all elements supported by the belt. The weight includes the takeup pulley assembly, the framework, and the takeup weight proper. The equation for the belt tensions produced by a vertical takeup is:

WWW.CEMANET.ORG has issued this document (1504) on 3/22/2017 to Patcharapon Sritrakool, Suanluang, , , Thailand

$$T_{tu} = \frac{W_{tu}}{2}$$

Equation 15.6
T_{tu}, Vertical takeup tension

Where:

W_{tu} = Total hanging weight including pulley, bearings, guides and takeup weight
T_{tu} = Belt tension at location of takeup

Horizontal Takeups

Horizontal Gravity Takeups

This type takeup consists of a takeup pulley assembly, a carriage assembly to support the pulley assembly and allow for horizontal motion, a takeup weight, and a wire rope and sheave system to connect the weight to the carriage. The carriage adds additional inertia to the system but the wire rope has an isolating effect similar to that described for sheave and rope friction. Though additional sheaves cause a greater deadband, they also provide potential benefits through remote location of the takeup tower supporting the weight as well as mechanical advantage or disadvantage depending on the importance of weight versus length of movement. See Figure 15.12. The calculation follows that of the section on wire rope friction.

Figure 15.7 shows a common wheeled horizontal takeup carriage as used on horizontal takeups. Note the moving frame supporting and guiding the takeup pulley for consistent stable movement and the rails and bearing equipped wheels providing low friction and long life required for frequent movement experienced by the takeup.

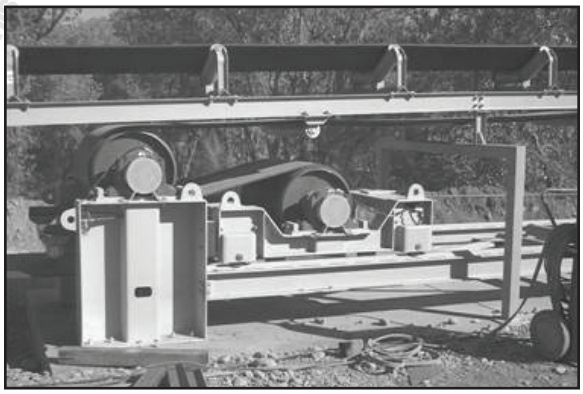

Figure 15.7
Horizontal automatic gravity takeup carriage

A wide range of takeup mechanisms, both passive and active, use a moving takeup pulley similar to this. As with sheaves, some friction is to be expected resisting movement but this will be small since the belt tension is not supported by the wheels. This resistance is usually ignored but can be added with the same efficiency as the wire rope sheave using the carriage weight.

WWW.CEMANET.ORG has issued this document (1460) on Apr 2, 2013 to Pattarapom Smitakool, Sualuang, , , Thailand

Active Powered Takeups

A variety of powered mechanisms are used to cause movement of the takeup carriage most commonly in combination with wire rope reeving to alter the force and movement range. Most common are linear actuators, usually hydraulic cylinders or electric winches, pulling directly on the wire rope. Figures 15.8 and 15.9 show examples of active powered takeups.

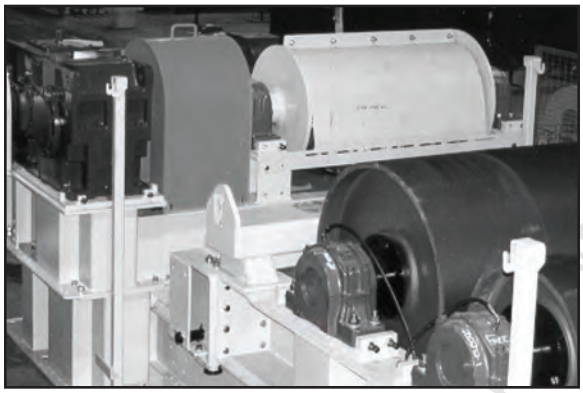

Figure 15.8
Winch powered horizontal takeup



Figure 15.9
Hydraulic actuated horizontal takeup

With active powered takeups, the applied force is a function of the driving mechanism and the belt tensions result from the combined effect with the force transfer system on the carriage divided by two. In some cases, the takeup is integrated into a belt storage unit which incorporates a stacked set of moving pulleys and a similar set of non moving pulleys to accommodate belt length changes of several hundred feet. These are used for extendable or retractable conveyors. They function similar to single pulley takeups with total force and movement appropriately magnified by the mechanical advantage of the system.

When long active horizontal takeups are used, several operational problems must be guarded against as follows;

- Takeups are energized prior to drive startups
- Idlers are needed to support long spans of belting in the takeup travel.
- Brakes are often required on winches to maintain some residual belt tension when the conveyor is at rest.

In some cases, screw takeup designs can be upgraded to automatic hydraulic takeups by a feedback loop system that constantly monitors belt tension. In smaller systems, hydraulics may be replaced with pneumatic pressure. These devices provide the conveyor user with the ability to:

- Set the belt slack-side tension at a specific value.
- Compensate for transient loads through their shock absorption capabilities.
- Compensate for belt stretch.
- They are suited to shorter conveyors with light tail pulleys to be within common travel and lateral load capabilities.

Guarding Active Powered Takeups

The motive power source and carriages must be guarded. If wire rope systems are used, consideration must be given to guarding for normal wire rope movement and for the reaction of the wire rope should the wire rope or supporting sheaves fail.

WWW.CEMANET.ORG has issued this document (JACK ... 2017 to ... Strictly ... ng., , Thailand)

Wire Rope Friction

Hysteresis in the takeup mechanism results in a range of force seen at the takeup pulley rather than a constant value. This is inherent to, and part of the design of active control components, but also a result of the friction in the takeup force transfer mechanism.

Automatic takeups alternately move out, as the takeup force is applied to take up belt elongation from added tensions in the conveyor, and are then pulled back in as the belt shortens. The takeup should be seen as doing the pulling but also as being pulled on. Actual movement in either direction is governed by the inertia of the takeup components and the range of friction making it hard to predict accurately, including static friction versus lower dynamic friction. Most importantly, friction in the takeup system alternates direction so the effect is to add and subtract its static friction from the nominal expected tension.

A common example is the loss as a wire rope rotates a series of sheaves when it connects a weight or hydraulic cylinder to a takeup pulley or carriage. Though the friction in each sheave may be only a small percentage of the force it sees, the accumulated effect will often cause actual takeup tensions to be ± 30% of nominal. The following equations are useful in these calculations:

$$T_{tu-max} = \frac{W_{tu}}{2 \times n_R} \times \frac{\sum_{m_{iP}} \left(\frac{1}{K_{sh}}\right)^{m_{iP}}}{\sum_{m_{oW}} \left(\frac{1}{K_{sh}}\right)^{m_{oW}}}$$

Equation 15.10

T_{tu-max}, Maximum belt tension at takeup pulley when using wire rope

$$T_{tu-min} = \frac{W_{tu}}{2 \times n_R} \times \frac{\sum_{m_{oP}} \left(\frac{1}{K_{sh}}\right)^{m_{oP}}}{\sum_{m_{iW}} \left(\frac{1}{K_{sh}}\right)^{m_{iW}}}$$

Equation 15.11

T_{tu-min}, Minimum belt tension at takeup pulley when using wire rope

WWW.CEMANET.ORG has issued this document (1450) on Apr 21, 2017 to Patricio Cifuentes Subject to Su... , Thanks!

Where:

K_{sh} = Effective friction of rope movement and sheave rotation:
1.04 for sheaves with anti friction/rolling element bearings
1.09 for sheaves with plain bushings

$m_{iP} = 0 \ldots n_{RP} - 1$

$m_{iW} = 0 \ldots n_{RW} - 1$

$m_{oP} = n_{sh} + 1 - n_{RP} \ldots n_{sh}$

$m_{oW} = n_{sh} + 1 - n_{RW} \ldots n_{sh}$

n_{RP} = Number of rope parts pulling on takeup carriage

n_{RW} = Number of rope parts supporting W_{tu}

n_{sh} = Number of rotating sheaves

n_R = Number of independent ropes comprising the rope system

T_{tu} = Maximum and minimum belt tension at takeup pulley

W_{tu} = Weight or actuation force into sheave system

Note: The notation $\sum$ indicates the sum of a series with integer exponents and indicates m_i, m_{i+1}, m_{i+2} ... with m = 0, m = 1, m = 2 ... and so on. The notation $\sum$ indicates the sum for a series of indices $i_1 \ldots i_2$. i.e. 1, 2, 3 with i_1=1 and i_2=3. Both T_{tumax} and T_{tumin} should be calculated and used as a possible range of tensions that may exist at the takeup pulley.

The effect that bronze brushed wire rope sheaves can experience significant line frictional losses. For example, in the following example, a single rope running through 6 rotating and loaded bearing sheaves.

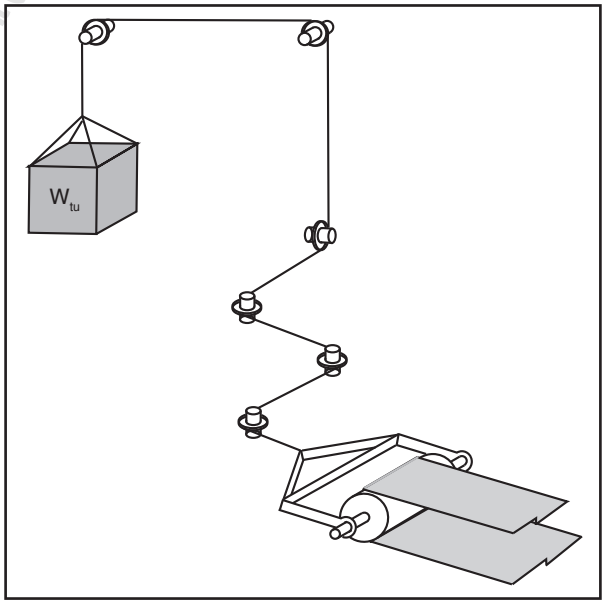

Figure 15.12
Horizontal gravity takeup schematic using wire rope

WWW.CEMANET.ORG has issued this document (1480) on Apr 4, 2017 to Prapaporn Sritrakool, Suanluang, , , Thailand

Wire Rope Vertical Takeup Example

W_{tu} = Weight or actuation force into sheave system =7,300 lbf

K = 1.04 with bearing style sheaves

n_{RP} = Number of rope parts pulling on takeup carriage = 1

n_{RW} = Number of rope parts supporting W_{tu} = 1

n_{sh} = Number of rotating sheaves = 6

n_R = Number of independent ropes comprising the rope system = 1

$m_{iP} = 0 \ldots n_{RP} - 1 = (1\text{-}1) = 0$

$m_{iW} = 0 \ldots n_{RW} - 1 = (1\text{-}1) = 0$

$m_{oP} = n_{sh} + 1 - n_{RP} \ldots n_{sh} = (6+1\ -1) = 6$

$m_{oW} = n_{sh} + 1 - n_{RW} \ldots n_{sh} = (6+1\text{-}1) = 6$

K = 1.09 with bushing style sheaves:

$$T_{tu-max} = \frac{W_{tu}}{2 \times n_R} \times \frac{\sum_{m_{iP}} \left(\frac{1}{K_{sh}}\right)^{m_{iP}}}{\sum_{m_{oW}} \left(\frac{1}{K_{sh}}\right)^{m_{oW}}} = \frac{7{,}300 \text{ lbf}}{2 \times 1} \times \frac{1}{\left(\frac{1}{1.09}\right)^6} = \frac{7{,}300 \text{ lbf}}{2 \times 0.596} = 6{,}124 \text{ lbf (2,780 kgf)}$$

$$T_{tu-min} = \frac{W_{tu}}{2 \times n_R} \times \frac{\sum_{m_{oP}} \left(\frac{1}{K_{sh}}\right)^{m_{oP}}}{\sum_{m_{iW}} \left(\frac{1}{K_{sh}}\right)^{m_{iW}}} = \frac{7{,}300 \text{ lbf}}{2 \times 1} \times \frac{\left(\frac{1}{1.09}\right)^6}{1} = \frac{7{,}300 \text{ lbf} \times 0.596}{2} = 2{,}176 \text{ lbf (988 kgf)}$$

K = 1.04 with bearing style sheaves:

$$T_{tu-max} = \frac{W_{tu}}{2 \times n_R} \times \frac{\sum_{m_{iP}} \left(\frac{1}{K_{sh}}\right)^{m_{iP}}}{\sum_{m_{oW}} \left(\frac{1}{K_{sh}}\right)^{m_{oW}}} = \frac{7{,}300 \text{ lbf}}{2 \times 1} \times \frac{1}{\left(\frac{1}{1.04}\right)^6} = \frac{7{,}300 \text{ lbf}}{2 \times 0.790} = 4{,}620 \text{ lbf (2,097 kgf)}$$

$$T_{tu-min} = \frac{W_{tu}}{2 \times n_R} \times \frac{\sum_{m_{oP}} \left(\frac{1}{K_{sh}}\right)^{m_{oP}}}{\sum_{m_{iW}} \left(\frac{1}{K_{sh}}\right)^{m_{iW}}} = \frac{7{,}300 \text{ lbf}}{2 \times 1} \times \frac{\left(\frac{1}{1.04}\right)^6}{1} = \frac{7{,}300 \text{ lbf} \times 0.790}{2} = 2{,}884 \text{ lbf (1,309 kgf)}$$

www.PLANET.OCS has issued this document (14604) to Pattarapom Sritrakool, Stanluang, , , Thailand on Apr 24, 2017

Figure 15.13
Example vertical gravity takeup using wire rope

If sheaves #2 and #3 were eliminated for the case with bearing style sheaves then: $T_{tu\text{-}max}$ = 4,269 lbf (1,938 kgf) and $T_{tu\text{-}min}$ = 3,121 lbf (1,417 kgf). Considering that the nominal tension is (7,300 lbf)/2 = 3,650 lbf (1,657 kgf), the importance of wire rope deadband on belt tension can be seen as significant. Use of roller bearings as well as well as minimizing the number of sheaves in the design is recommended for lowest cost design and reliability.

The lubrication of the sheave bearings and the rope is important to maintain low levels of friction. Lack of movement, too frequent movement or under design can lead to freeze up of both sheave bearing designs. If friction increases significantly, the takeup acts as a fixed takeup with the tension consequences of manual takeups discussed in Chapter 6.

Wire rope and sheave design should follow the manufacturers' recommendation. In particular, large sheave pitch diameters and shaft diameters are important considerations for long rope life and successful takeup operation.

Takeup Structure Considerations

Takeup structures are prone to damage from mobile equipment or from accidental falling of the takeup weight. Often the fit between the carriage supporting the takeup and the structure that guides the carriage is purposely designed very loose to avoid jamming from fugitive materials or to reduce friction between the carriage and the guides. The bend and takeup pulleys must stay in alignment in all three planes with the terminal pulleys and idlers or the belt will mistrack. Build up of carryback on the takeup pulley must be prevented to maintain belt alignment. The structure that guides the takeup pulley must keep the takeup pulley in perfect alignment in all three planes with the belt center line.

The takeup weight is calculated to maintain the proper tension on the belt and must be protected from buildup of fugitive materials. If the buildup is uneven it can contribute to mistracking or carriage binding. In extreme cases the excess weight of fugitive materials can reduce splice life, cause belt failure, or overload the structure.

CEMA Recommendation for vertical gravity takeups:

- The fugitive carriage length should be at least 2.5 times the belt width to maintain alignment of the takeup pulley.
- The space between the carriage and the structure guides should be controlled using low friction sliding contact or rollers.
- The structure guides should be design and maintained vertical and in alignment with the terminal pulleys.
- The takeup pulley should be protected from fugitive material that can get on the clean side of the belt by installing a V-plow on the dirty side of the belt ahead of the first incoming bend pulley.
- The takeup weight should be protected from buildup of fugitive materials with a sloped roof or deflector.

Similar appropriate considerations should be given to automatic horizontal and active powered takeups.

TAKEUP SAFETY DEVICES

Automatic takeups usually have large vertically guided weights. These vertical weights are housed in structural towers that allow for the weight to travel up and down a guided frame as the belt stretches and contracts. Should the belt or tension cable fail, these weights are released to free fall onto the tower bottom and supporting structure. These potential and kinetic energies can be very high and can cause extensive damage to foundations, steel structures and injury to nearby personnel. Often these towers are overhead of walkways or sensitive plant and infrastructure.

Damage can also occur to the counterweights themselves. Safety devices that absorb the kinetic energy and are useful to control the maximum structural loads on the tower base and supporting structure. These

www.HELPLINK.ORG (es (Mould Int) doc (VET 1446(2)) on Apr 2017 to Rabanon Phil 2017, Suanluang, Thailand

devices can be multiple impact devices or single impact units. The application and frequency of belt failure determines the type of energy absorption required.

An energy balance can be calculated for a free falling weight with the maximum takeup travel distance as the free fall height. The mass of the takeup with all attachments that could potentially free fall should be considered.

$$PE = m \times g \times h + m \times g \times s$$

Equation 15.14
PE, Potential energy of a counter weight

$$R = \frac{PE}{\eta \times s}$$

Equation 15.15
R, Reaction forces on energy absorber structure

Where:

g = Acceleration due to gravity
h = Vertical travel of takeup weight assembly
m = Mass of falling takeup weigh assembly
η = Efficiency of the energy absorbing device
PE = Potential energy
R = Reaction force seen by the energy absorber support
s = Stroke of energy absorber
s_{ab} = Effective stroke of energy absorber

Energy Absorbing Device	Impacts	Efficiency, η
Hydraulic Oil Pin Buffers	Multiple	0.85
Cellulose Hydraulic Buffers	Multiple	0.65
Strain Energy Absorbers	Single	0.60
Cellular Buffers	Multiple	0.40
Rubber Buffers	Multiple	0.25
Springs	Multiple	0.15

Table 15.16
η, Efficiency of counter weight energy absorbing devices

A rule of thumb for takeup weight arrestor energy absorbers, the stroke should be around 25% of the takeup travel for an energy absorber that is around 60% efficient. The energy absorbers are always mounted in pairs. The tower height must thus accommodate the length and impact beams of the energy absorbers.

WWW.CEMANET.ORG has a limited document (1440 pp) to Patiparn Sritrakool, Sudhuang, Thailand

Takeup Safety Device Example

Takeup mass = 2.5 mt, s_{ab} = 1.2 m, R_{max} = 200 kN, η = 60%

$s_{ab} = s \times 25\% = 1.2 \times 0.25 = 0.36$ m

$$PE = m \times g \times h + m \times g \times s_{ab} = 2.5 \text{ mt} \times 9.81\frac{m}{s^2} \times 1.2m + 2.5 \text{ mt} \times 9.81\frac{m}{s^2} \times 0.36 \text{ m}$$

$$PE = 29.43\frac{\text{mt m}^2}{s^2} + 8.83\frac{\text{mt m}^2}{s^2} = 38.26 \text{ kJ}$$

$$R = \frac{PE}{\eta \text{ x } s_{ab}} = \frac{38.26 \text{ kJ}}{0.60 \text{ x } 0.36 \text{ m}} = 177.1 \text{ kN (39,848 lbf)}$$

Refine the calculation by using specifications of a specific energy absorbing device

Figure 15.17
Example, takeup safety device



Figure 15.18
Takeup safety devices on vertical gravity takeup

WWW.CEMANET.ORG has issued this ... to Pattarakorn Srikokool, Suanlung, , , Thailand

This Page Left Intentionally Blank

WWW.CEMANET.ORG has issued this document (14604) on Apr 24, 2017 to Pattarapom Sritrakool, Suanluang, , , Thailand

Emerging Technologies Pg 695
Air Supported Conveyors Pg 695
- Introduction
  - History
  - Principle
  - Nomenclature
- Applications
  - Belt Lengths, Widths and Capacities
  - Cost Comparison
  - Trough Shapes
  - Return Belt Options
- Air Requirements
  - Fan Selection
  - Duct Design
- Components and Design
  - Enclosure and Plenum
  - Belting
  - Transitions
  - Transfer Chutes
  - Covers
  - Dust Collection
  - Takeup
  - Curves
  - Belt Cleaners
  - Instrumentation
  - Options
- Installation
- Maintenance
- Advantages of Air Supported Conveyors
- Disadvantages of Air Supported Conveyors
- Air Supported Conveyor Engineering
  - Air Supply Requirements and Example
  - Dust Collection Requirements and Example
  - Power Requirements and Example

Discrete Element Simulation Pg 717
- Introduction
- Benefits of Simulation-based Design for Transfer Points
- Representing Bulk Flows with DEM Material Modeling
- Engineering Use of DEM on Conveyor Transfers

WWW.CEMANET.COM Created/Downloaded by item (1e+04) on Apr 24, 2017 to Patcharapom Sritrakool Suanluang, , , Thailand

Simulation Goals
Safe Design and Sensitivity Analyses
System-Dependent Sensitivities
The Importance of Appropriate Material Model Definition
Applying DEM with Higher Confidence
Material Sample Collection
Physical Testing of Collected Samples
Testing, Observation, and Calibration
Material Model Calibration
Calibrated Discrete Element Simulations of Transfer Point Designs
Material Build-up and Blockage
Excessive Impact Speeds
Non-symmetrical Flow and Dead Zones
Material Spillage
Conveyor Belt Loading
Determining Operational Capacity
DEM Conclusion
Gearless Conveyor Drives Pg 732
Introduction
Eliminating Maintenance-intensive Components
Gearless Low-speed Synchronous Motors
Frequency Converters for Gearless Conveyor Drives
Gearless Conveyor Drives Conclusion
In Pit Crushing Pg 736

WWW.CEMANET.ORG has issued this document [illegible] on Apr 24, 2017 to Patrapom Smakool, Suanluang, , , Thailand

EMERGING TECHNOLOGIES

New technologies tend to be adopted slowly in bulk material handling so it is difficult to identify new technologies that have become mainstream. The purpose of this chapter is to highlight a few technologies that are becoming accepted and applied in a wide range of applications.

AIR SUPPORTED CONVEYORS

Introduction

Air supported conveyors incorporate the same engineering design criteria and calculations as idler supported belt conveyors with a few exceptions. There are several manufacturers of air supported conveyors and each on has its own unique cross section and formulas for calculating conveyor power, fan size and belt tensions. This chapter illustrates one method for the selection and design of air supported conveyors.

History

In 1904 James M. Dodge received a patent for what was probably the first air supported conveyor. A belt was supported on a bed perforated with incline openings. Air blasts were applied to the underside of the belt causing the belt to lift and move upward. The concept of the air supported belt conveyor was reintroduced in the mid 1970's by Dr. Jonkers using the patents of Leonard S. Barnish of South Africa. Dr. Jonkers was the first one to successfully commercialize air supported conveyors and most air volume and pressure formulas in use today are derived from these early patents.

Principle

Air supported conveyors work on a principle similar to air bearings where pressurized air can support a significant load because of the large surface area upon which air pressure acts. In a conventional conveyor design idlers are used to support the belt and load. With an air supported conveyor a trough shaped plate with an air supply channel below it and orifices in it supply the air pressure needed to float the belt and load. Because of the large surface area of the belt, only a low pressure is required to lift the belt and load. The lateral stiffness of the belt acts as a diaphragm controlling the air gap to a very thin layer thus limiting the volume of air required. The belt can be moved easily because the air film creates very little resistance to belt movement. The very thin layer of air minimizes the introduction of air into the environment at the belts edge. Generally, the tail and discharge areas incorporate conventional terminal pulleys. The troughing side is air supported while the return can be air or idler supported.

Nomenclature

Manufacturers use different terms for the entire conveyor enclosure and sub assemblies. Whether designed for retrofit or new installations, air supported conveyors are usually fabricated in 10, 20, or 40 ft (3, 6, or 12 m) sections that are connected together on site to form a continuous assembly.

www.CEMANET.ORG has granted access to (account #21604) on April 24, 2017 to Pattarapom Sriarkarn Suanlamduan, , , Thailand

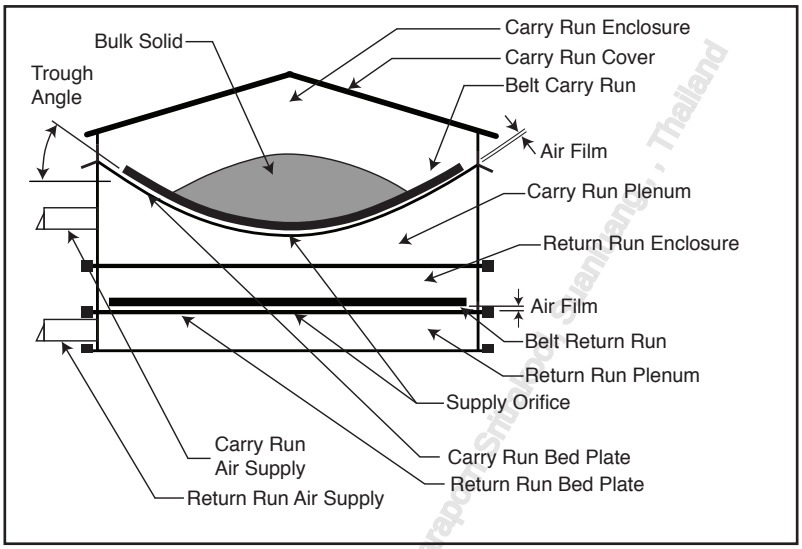

Figure 16.1
Nomenclature for air supported conveyors

Licensed to Patrapol Sinbongkot, Siamtechno, , Thailand
Print (2/5/2017) on Apr 24, 2017

Applications

Air Supported belt conveyors are used for the transportation of most bulk materials and offer energy, environmental and safety advantages over conventional idler belt conveyors. Air supported belt conveyors are becoming more popular because newer designs are cost competitive with conventional belt conveyors when environmental and maintenance costs are considered. They are ideal for applications where a high level of control over dust and spillage is required. Air supported conveyors have been used on reversing traveling shuttles, ship loaders and radial stackers in addition to more common applications.

Bulk Material	Air Supported Return	Idler Return
Alumina	X	
Animal Feeds	X	
Bauxite	X	
Beet Pulp Pellets	X	
Cement & Clinker	X	X
Coal: Bituminous/Sub Bituminous/ Lignite	X	X
Grain: Wheat/Corn/Soybeans	X	X
Hay Cubes	X	
Lime		X
Lime Stone	X	
Ore: Iron/Gold/Iron Ore Pellets		X
Peas	X	
Salt		X
Sugar	X	
Synthetic Gypsum		X
Wood Chips & Biomass		X

Table 16.2
Materials commonly conveyed on air supported conveyors and typical return run choices

www.CEMA.org

Belt Lengths, Widths and Capacities

Air supported conveyors can be used for many bulk solids ranging from 15 to 135 lb/ft^3 (240 to 2,162 kg/m^3) with belt widths ranging from 12 to 84 inches (305 to 2134 mm) handling up to 5,800 tph (5,262 mtph) in conveyor lengths up to 3,500 ft (1,067 m) long at speeds from 50 to 1000 fpm (0.25 to 5 m/s). Lumps up to 15 inches (380 mm) have been successfully conveyed on air supported conveyors. Many overland air supported belt conveyors with flights between 500 and 2,000 ft (152 to 610 m) are operating around the world. Contact a CEMA Member company for application assistance.

Cost Comparison

Comparisons have shown that air supported belt conveyors on new greenfield applications are generally 10 to 20% more costly than idler type conveyors. This stands to reason since the air supported belt conveyor is a normally totally enclosed for its entire length. However, the additional cost can be recovered very quickly by the savings.

Safety:

- Elimination of idler pinch points
- Reduced noise
- Reduced guarding requirements
- Housekeeping improved
- Reduced load area spills
- Eliminates belt sag and idler caused spills
- Reduced return idler carryback deposits
- Reduced dust escape

Maintenance:

- Fewer idlers reduces lubrication and roll replacement frequency
- Lower belt tension and increased splice and belt life

Power Savings:

- Reduction in dust collection requirements
- Can save energy on horizontal conveyors

Product Quality:

- Reduction of product degradation
- Control of contamination.

Trough Shapes

Air supported belt conveyors use a troughed box (plenum) as the air chamber (duct) to distribute the air as uniformly as possible over the length of the conveyor. The plenum is generally continuous for the length of the conveyor. The trough shaped bed that the belt rides over is generally catenary shape corresponding to a 35 or 45 degree troughing angle. Semi-circular troughs (90 degree troughing angle) are also used.

Return Belt Options

Air supported conveyors are offered with two basic belt return run options; air supported or idler supported. The type of return depends on the design criteria, the properties of the bulk solid and the quality of maintenance. Air supported returns are often specified where contamination is a major concern such as in grain handling. Idler supported returns are often specified where accumulation of carryback in the enclosure is a major concern. The pressurized air film between the belt and the bed plate tends to keep

www.CEMA.org has licensed this document (1/8/24) on Apr 25, 2017 to Patcharapom Sriwapol, Suanluang, Thailand

dry materials in suspension moving them out from under the belt for collection or cleaning. Wet sticky bulk materials may tend to accumulate on the return bed plate affecting the performance of the conveyor. Therefore, the properties of the bulk solid must be tested for each application to select the appropriate type of return. See Chapter 3 for testing of bulk solids. Since the return run bed plate is supporting the "dirty" side of the belt the belt must be effectively cleaned before entering the return run. Inadequate belt cleaning maintenance will effect the performance of an air supported conveyor by allowing too much material to accumulate.

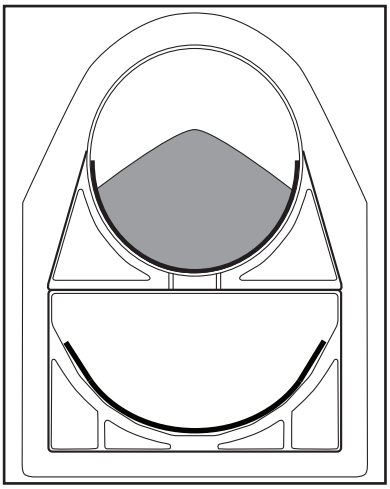

Figure 16.3
Air supported return

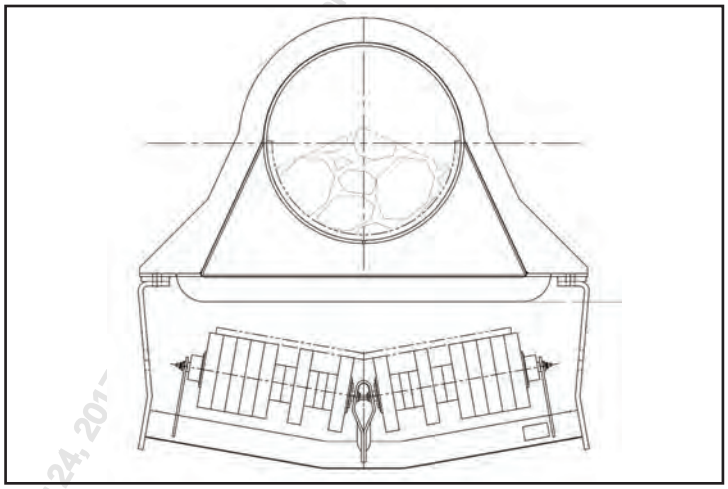

Figure 16.4
Idler supported return

Generally most bulk solids with moisture contents below 5% are considered "dry" bulk solids and are appropriate for a totally enclosed air supported return. For bulk solids that are sticky at any moisture content or have more than 15% moisture, V-return idlers are recommended. Contact a CEMA Manufacturer for specific recommendations.

Air Requirements

Air volume and pressure are the two most important aspects of designing air supported belt conveyors. It is extremely important and critical to provide adequate air flow and pressure to support the belt under all loading conditions. The air discharge orifice spacing and diameter should be established for each given condition. Orifice spacing and diameter may differ between manufacturers therefore volume and pressure requirements may differ. Consequently, fan sizes and fan motor horsepower recommendations may differ between manufacturers.

Fan Selection

A continuous flow of low pressure air is fed into the plenum chamber from a centrifugal fan. One fan is required for every 700 to 1,000 ft (213 to 2305 m) of conveyor depending on the application and plenum design. Air pressure is generally expressed in inches of water column. Air requirements are relatively low ranging from approximately 2.5 to 11 cfm per foot (0.07 to 0.3 m^3/min/m) of conveyor length at pressures ranging from 11 to 65 inches of water gauge (2.7 to 16.2 kPa) depending upon the belt width, capacity and plenum design.

The air is dispersed between the troughed bed and the belt through perforations along the central axis of the bed forming a thin, continuous film of air which relieves the frictional contact between the belt

and the bed. Because of the characteristics of centrifugal fans they consume less energy when the belt is loaded than unloaded, can be easily regulated with dampers and are well suited for air supported conveyor applications. Fans are selected to be slightly oversized so that the flow can be adjusted on start up and to allow for splitting the flow if necessary. A conventional head pulley and drive provide the belt tension required to move the load.

Fan volume and pressure are determined by a combination of:

- Belt weight
- Product load
- Belt tension
- Ambient air properties
- Plenum orifice diameter and spacing
- Plenum cross section

Air volume and pressure need to be calculated to reduce the frictional resistance between the belt and the bed plate. In addition, the pressure calculation should include:

- Plenum losses
- Duct losses
- Intake filter losses
- Intake and/or exhaust (silencers) resistance
- Intake and/or exhaust dampers/gates resistance
- Fan efficiency

Fan horsepower calculations should include:

- Site elevation
- Ambient air temperature range
- Air density
- Fan efficiency ~ 83%
- Filter efficiency ~ 80%
- Motor efficiency ~ 95 to 97%

Experimentation dictates that a minimum 10% correction factor, R_{rsv} and R_{rsf} = 1.10, should be added to the air flow and fan power calculations for conveyor angles over 15 degrees.

Fans are sized for volume and pressure. Most air supported belt conveyors can be supplied with "off the shelf" low volume, low pressure centrifugal fans. Past experience dictates that, due to unforeseen circumstances e.g. climate conditions, conveyor alignment during installation, improper assembly of conveyor plenums, possible leaks at conveyor plenum joints, etc., fans need to be conservatively sized. A duplicate fan may be incorporated in the air circuit to ensure against potential down time. The fan requirements and arrangements for an air supported belt return are similar. Some manufacturers support the return belt with separate fans, others proportion the air of one fan to support both the carrying and return sides.

Duct Design

Ducts between the fan discharge and plenum inlet should be designed to create the least amount of resistance. To minimize duct resistance, duct diameters should be the next larger standard duct size and at least 2 inches (50 mm) larger than the diameter of the fan discharge diameter. Elbows should be minimized. Flange joints should be caulked and bolted and duct should be fabricated to withstand pressures at least 3 times the fan pressure.

www.EMARE.info (registered to document 14604) on Apr 24, 2013 © Patarapan Chirakool, Suanluang, , , Thailand

Components and Design

Air supported conveyors can incorporate many standard conveyor components and lend themselves to both retrofit and new installations. Because of the lower friction compared to idler based conveyors the required belt tensions can often be lower which offers options for use of lower load rated components or increased capacity in the same belt width envelope.

Enclosure and Plenum

Enclosure design varies by manufacturer and application. Since the enclosure and plenum are usually integrated together, the terms plenum and enclosure are often used interchangeably.

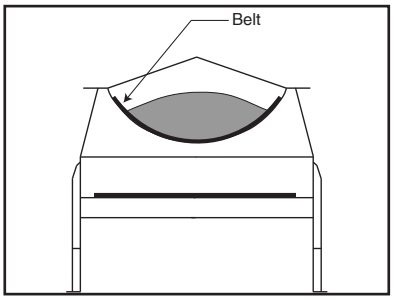

Figure 16.5
Rectangular enclosure

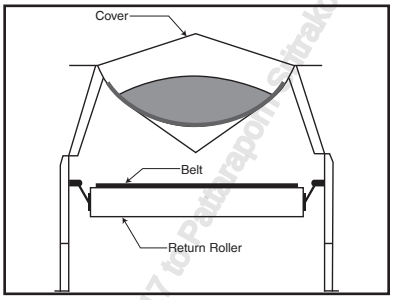

Figure 16.6
V-shaped enclosure

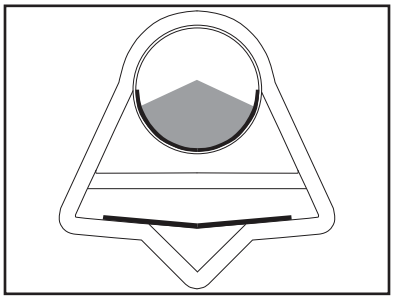

Figure 16.7
Circular enclosure

Common carrying run enclosure cross sections are rectangular, V-shaped or circular. Most return run enclosure cross sections are rectangular in shape. The air supply plenums also vary by manufacturer however the top of the plenum, which is called the bed plate, is always a catenary or circular shape. The size and location of the air supply holes in the bed plate vary as well by manufacturer but are generally placed uniformly spaced along the center line of the bed plate and the hole diameter varied according to application requirements.

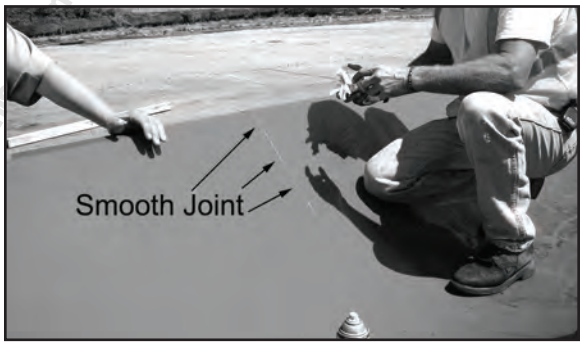

Figure 16.8
Bed plate joint

Manufacturers offer designs for retrofit and new construction. For retrofit the enclosures are designed to fit the existing conveyor structure and belt line. On new construction the plenums are often an integral part of the support structure, and enclosures are often custom designed for the application to reduce the overall cost of the conveyor. While designs may vary, the following are critical prerequisites to functionally efficient air supported belt conveyors:

- The bed plate must be smooth and uniform between enclosure sections and void of irregularities in both the lateral and longitudinal axis.
- The bed plate segments must be flush and sealed at each joint.

CEMANET.ORG has issued this document (1400) on Apr 25 2017 to Pattrapon Sirakool, , Chonburi, , Thailand

- The enclosure and plenums must be designed to minimize deflections under load and other variables such as temperature and wind.
- The cross sectional area of the plenum must accommodate the design air flow throughout all operating conditions.

Belting

Trough angles of 45 and 90 degrees are common with air supported conveyors and belt flexibility is extremely important. The belt acts as a diaphragm to self regulate the thickness of the air film with fan performance at its optimum when a consistent and thin air gap is maintained. For proper air distribution through the orifices to lift the loaded belt, the belt should conform to and make contact with the entire curvature of the loaded belt under the no pressure condition.

Air supported conveyors will generally accommodate standard conveyor belts. The most compatible belts are generally two or three ply fabric belts with top covers limited to 0.25 inches (6 mm). Bottom covers can be eliminated in some applications. Cover hardness should be in the 60 +/- 5 Shore A range. Steel cable belts, since the cables are longitudinal, have been found to trough well on belts 36 inches (914 mm) and wider. All belt splices should be vulcanized. All air supported conveyor and major belting manufacturers are familiar with specifying belting for air supported conveyors. Contact a CEMA Member company for application assistance.

Transitions

The transition area is critical for proper operation of an air supported conveyor. As the belt enters the troughed bed at the loading area or leaves the troughed bed at the discharge the belt edges, absent transition idlers, tend to press outward, causing wear on the bed plate. Therefore most manufacturers recommend specially arranged transition idlers at the entrance and exit of the air supported beds. Air supported conveyors should not be loaded in the transition. At the discharge transition material is prone to spreading out and spilling onto the return run of the belt. Some manufacturers offer air supported transitions to bring the belt as close as possible to the discharge pulley to control spillage.

Transition distances for air supported conveyors correspond to belt manufacturer's recommendations for conventional idler based conveyors for full trough transitions. Since air supported conveyors are often designed with troughing angles greater than the conventional conveyors, additional transition distance is required for troughs greater than 45 degrees. For 90 degree troughs it is recommended that full transition design be used and the transition distance be 3.5 to 4.0 times the belt width.

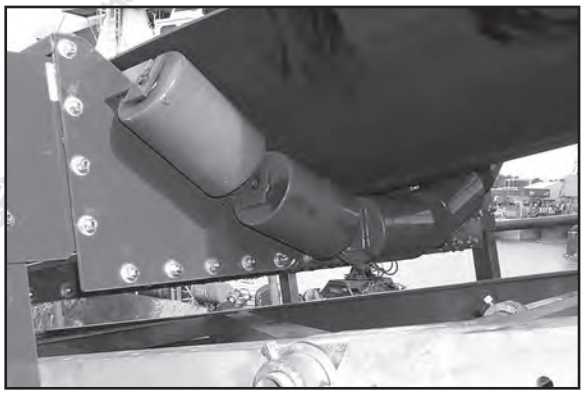

Figure 16.9
Transition idlers

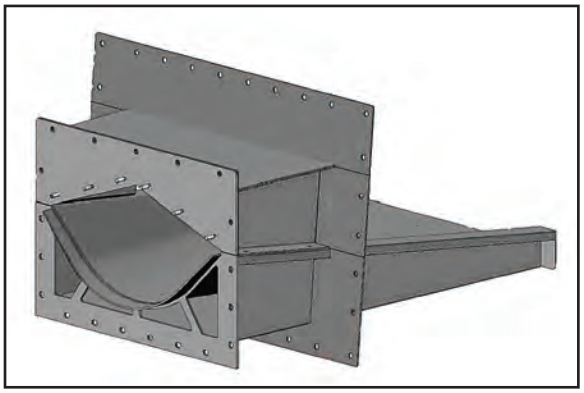

Figure 16.10
Air supported transition

Transfer Chutes

Most manufacturers center the load by using an adjustable center loading chute. Other manufacturers utilize the center loading capabilities of engineered chutes. Regardless of the approach, it is critical to load an air supported conveyor uniformly in the center of the belt and provide means to easily maintain the center loading components. Whether loaded with an adjustable chute or an engineered chute, allowance must be made for adjusting the center loading upon initial start up and after periodic maintenance. Several inches of horizontal and vertical adjustment for center loading should be provided in the chute design. Access to the load zone for maintenance and clearing jams is just as important on air supported conveyors as for conventional idler based conveyors.



Figure 16.11
Center loading chute

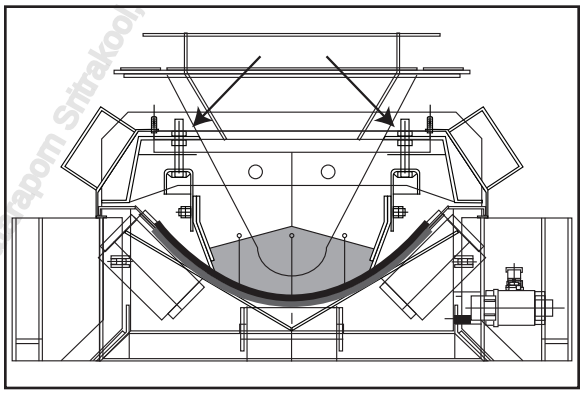

Figure 16.12
Chute adjustment



Figure 16.13
Engineered chute loading air supported conveyor

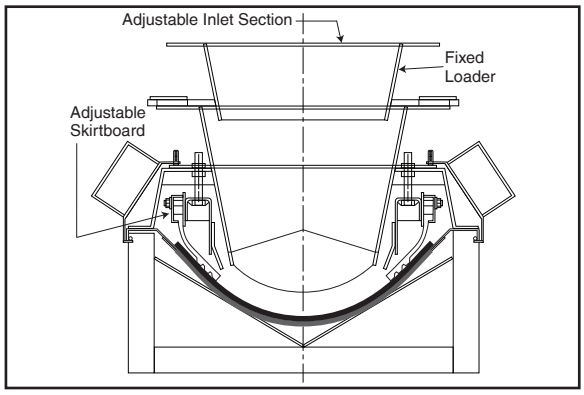

Figure 16.14
Engineered chute skirtboards

It is important to control side spillage in the load zone to prevent material from getting between the belt and the bed plate. Depending upon the application and the design employed, air supported conveyors can be fitted with skirtboard extensions or they can be eliminated but in all cases skirtboards should be incorporated in the load zone. The standard CEMA recommendation of 2 feet (600 mm) of skirtboard beyond the loading point for every 100 fpm (0.5 m/s) is used but since most air supported conveyors are manufactured in a minimum of 10 foot (3 m) lengths, a minimum of 10 feet (3 m) of skirtboard is often used. Skirt seals are used in some designs depending upon the application and troughing angle. Most manufactures eliminate skirt seals on trough angles of 90 degrees. Once the bulk material has been loaded and settles into a profile, determined by its surcharge properties, the load will remain remarkably stable as the belt line with air supported conveyors does not sag as it does between idlers on a conventional conveyor.

There are several ways to protect the belt and bed plate from impact damage. In many applications the standard air supported design without impact protection in the load zone. The most fundamental requirements are to minimize the free fall drop height and vertical velocity relative to the belt travel. Several manufacturers have developed proprietary methods. One method is to reinforce the impact area and incorporate a replaceable impact cushion. Another method is to isolate the plenum in the impact area and increase the air pressure relative to the rest of the plenums using compressed air for the impact area. Another option is to load on standard impact idlers or beds and then transition to the air supported conveyor. Contact a CEMA Member for application assistance when impact is a concern.

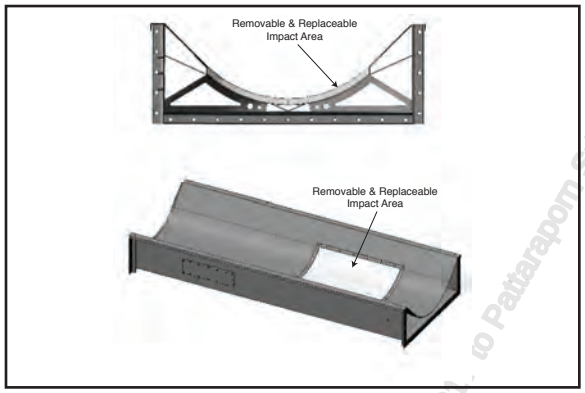

Figure 16.15
Replaceable impact cushion

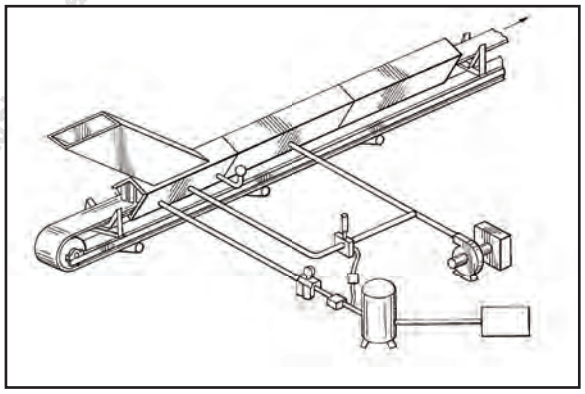

Figure 16.16
High pressure plenum using compressed air boost

Loading

Air supported conveyors are well suited to multiple load points. Similar design considerations as those applied to conventional idler based conveyors need to be observed. Controlling the loading so that the belt is center loaded and designing the skirtboards so the capacity increase is progressive are important.

While best suited for bulk materials of consistent lump size and feed rates, air supported conveyors can handle lumpy materials. Regardless of the size distribution of the bulk material good loading conditions are critical for air supported conveyors to function properly and prevent damage to the belt from impact and abrasion. The most important design criteria to consider for loading an air supported belt are:

- Load after the belt is fully troughed.
- Center load the belt.
- Protect the bed plate and belt from impact by large lumps or high and inconsistent handling rates.

Loading the belt on the transition is problematic on all conveyors and CEMA recommends against this practice. Loading on the transition creates conditions that make it difficult to seal the load zone, increases turbulence in the load zone and greatly increases the likelihood that the belt will be damaged by grooving at the skirt seal and belt interface.

A conventional idler based conveyor depends upon gravity, alignment of the rotating components and the friction between the belt and idlers to keep the belt tracking true. Since there are no, or very few idlers, in an air supported conveyor system and the friction between the belt and the air film is minimal, air supported conveyors depend upon gravity to keep the belt tracking. Therefore, for an air supported conveyor to track true, it must be center loaded with as uniform a cross sectional area as possible. If the load is off center it will push the belt toward the less loaded side and can cause material to get between the belt and the bed plate and/or mistrack the belt into the enclosure.

www.CEMANET.org has granted limited permission to Pattarapom Sirirat (CEMA) on Apr 24, 201_ to Pattarapom Sirirat (CEMA) on Apr 24, 201_ to Pattarapom Sirirat (CEMA) on Apr 24, 201_

Air supported conveyors can be designed with impact absorbing loading sections very similar to the techniques employed with conventional idler based conveyor systems. Manufacturers have various ways of designing an air supported impact zone. It is also possible to install a conventional idler based load zone and transition to an air supported conveyor for the carrying run although this reduces one of the main benefits of air supported conveyors which is the ability to totally enclose the belt and reduce dust and spillage.

Discharging

Designing the transferring bulk materials through a discharge chute is always challenging. Care in design will greatly reduce dust generation, plugged chutes and spills. Unlike conventional practice for idler based conveyors, the discharge for air supported conveyors should be dust and water tight to complete the circuit for a totally enclosed conveyor. The design of an air supported conveyor discharge chute should include additional consideration compared to a conventional discharge chute for the following:

- Enclosing the head and snub pulleys.
- Crowned head pulley to aid in tracking.
- Allowance for Primary, Secondary and Tertiary belt cleaners.
- Belt plow that discharges into the chute.
- Chute liners.
- Sealed access doors.
- Shaft seals.
- Exhaust vent for supply air and dust collection.
- Expansion connection to air supported conveyor sections.

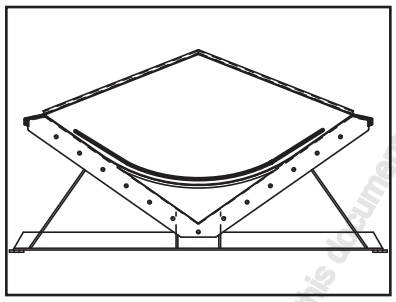

Figure 16.17
Hip roof cover

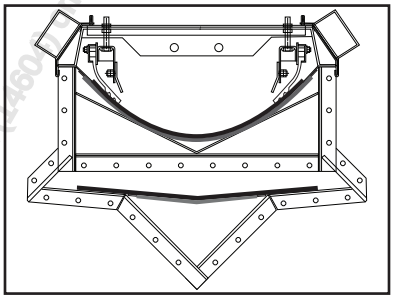

Figure 16.18
Flat cover

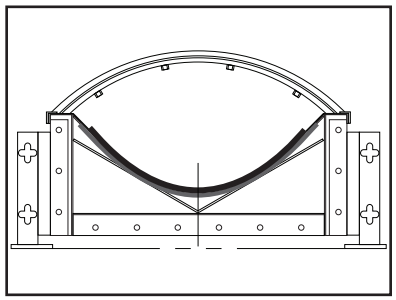

Figure 16.19
Circular cover

Covers

Covers are not needed for air supported belt conveyors to operate properly. The purpose of covers are to keep the bulk solid dry, prevent dust escaping and contain spillage. There are numerous outdoor installations where the entire conveyor or sections of the conveyor are open to the atmosphere. It may be advisable, as with idler supported conveyors, to install wind guards to prevent excessive dusting or mistracking do to cross winds. Air supported conveyor covers vary in design from hip roof, flat or semi circular. Covers are often made of light-weight materials such as aluminum or plastic to reduce overall conveyor weight. It is recommended where covers are installed that they be readily removable or provided with inspection doors at frequent intervals. At a minimum, covers of a length comparable to the skirted length of conventional idler supported conveyors are recommended in the loading zone.

CEMA has issued this document (2460) on Apr 21, 2017 to Pattarapom Srinarong, Srinakharinwirot University, Sanluang, , Thailand.

Dust Collection

Based on past experience, most designers use the same formulas used for conventional idler conveyors to calculate dust take off requirements for air supported belt conveyors. The requirements could not be farther apart and considerable savings can be realized in filter and fan motor sizes for air supported conveyors if the following are taken under consideration:

- Air supported belt conveyors are totally enclosed, dust tight and water tight. Therefore, the belt load cross sections on the belt may cause somewhat of a "wind tunnel" or 'chimney effect". There are only two areas where the majority of the dust is created, at the load point and discharge point. Since the belt and load are totally supported from loading area to discharge on a low pressure, low volume cushion of air, very little dust is created between the loading and discharge points.
- Air requirements to lift the belt range from about 2.5 to 11 cfm per foot (0.07 to 0.3 m^3/min/m). Most of this air is carried towards the discharge by the wind tunnel effect.
- With engineered discharge chute and loading area designs, the material can be gently deposited on the belt so that air turbulence within the discharge chute and loading area is minimized, reducing positive air flow through the chute, thereby dramatically reducing dust conditions. Displaced air is mostly carried towards the loading area of the next feed point.

Takeup

As with all belt conveyors, minimum belt tensions are maintained through takeups. The takeup moves a pulley to take up stretch in the belt and to cause a reaction force in the belt. The takeups may be fixed or automated. A takeup that moves to automatically maintain constant tension, despite varying belt stretch due to changing tensions throughout the conveyor, is used almost universally for conveyors with lengths over several hundred feet. Air supported belt conveyors should incorporate fixed or automated take-ups similar to other belt conveyors. Preference should be given to locate the takeup just after the drive. Although mid-conveyor vertical gravity type take-ups are used frequently on air supported belt conveyors, it will split the air return plenum, usually requiring an additional fan. All air supported belt conveyors require vulcanized splices to work properly. Therefore, the following CEMA recommendations for takeup travel govern: screw or fixed take-ups for 100% of rated belt tension, use 4% of conveyor center distance; for 75% or less of rated belt tension, use 3% of conveyor center distance; for automatic takeups use 2.5% of conveyor pulley center distance plus 2 feet (600 mm). Refer to Chapter 15, Belt Takeups, for further information.

Curves

Air supported conveyors can accommodate vertical convex and concave curves but not horizontal curves. It is best to avoid vertical curves with air supported conveyors but if necessary they can be incorporated. Unlike conventional idler based conveyors it is not permissible to allow the belt to lift off the bed plate and create an unbalanced air flow and pressure condition. Most manufacturers of air supported conveyors design custom mitered sections to accommodate a specific design. Transition idlers as shown in Figure 16.9 must be incorporated at the entrance and exit of an air supported curve. When designing concave vertical curves into an air supported conveyor the curve radius should be designed more generously than for a conventional idler based conveyor to eliminate the possibility of belt lifting based on starting acceleration and to reduce belt edge tension to prevent the belt from rubbing on the plenum.

Convex vertical curves can be included in air supported conveyors by discontinuing the air supported sections and inserting a section of troughing idlers to carry the belt through the curve and then continuing with the air supported conveyor sections. The idlers can be enclosed and connected to the split air supported sections to maintain the air channel above the belt to facilitate dust control and collection.

www.HEAVYLIFTER.com issued this document (2016) on April 4, 2017 to Patterson Cargo Services, Thailand

When it is required to include an air supported convex curve in the conveyor system the following design criteria are recommended:

- The radius of curvature should be generously selected to eliminate the possibility of belt lifting based on starting acceleration and to reduce belt edge tension to prevent the belt from rubbing on the plenum.
- The bed plate should be made from 304 or 316 stainless steel.
- The belt should be specified with a bareback bottom cover.
- Additional air flow should be provided in the curvature.

Belt Cleaners

Air supported conveyors require adequate belt cleaning and cleaner maintenance to perform properly. Belt cleaning is especially critical when an air supported return run is used. Only small accumulations of carryback can be tolerated with air supported conveyors as build up between the belt and bed plate can increase power requirements and accelerate belt and bed plate wear. Should small amounts of carryback remain on the belt past the belt cleaning station, the natural air flow of the system will usually eject the carryback as it dries from between the belt and bed plate. The airborne carryback, in the form of dust particles is ejected from under the belt and returns to the main material flow or is collected with the overall dust filtering system. The considerations and options for belt cleaning in Chapters 2 and 11 apply to air supported conveyors.

Instrumentation

A pressure switch should be incorporated to ensure that the fan is activated prior to the conveyor being started. The fan is started first, and when the required pressure is reached, the conveyor is started. Several magnehelic pressure gauges with limit switches should be incorporated in the air circuit. It is wise to locate a magnehelic gauge at each end of the conveyor to indicate the pressure variations within the conveyor. Maximum pressure variation should not exceed 2 inches of water column (0.5 kPa).

A temperature switch should be incorporated, especially in very cold climates. Due to temperature differentials between day and night, condensation may form between the belt and the bed plate. As temperatures drop, a stationary belt may freeze to the bed plate. To prevent this from happening, a temperature switch may be incorporated into the design to start the fan at, for instance 35° F (2° C), to lift the belt off the bed plate. Further, if the temperature switch is provided with two settings, the switch may be used to start the conveyor on "creep" drive when temperatures reach extreme lows. In applications where condensation combines with fine particles from the bulk solid to form glue like pastes air heaters have been used to control the dew point and prevent condensation.

Options

Air supported conveyors can be adapted to work with most common accessories and process equipment. On retrofit it is common to incorporate all of the accessories and process equipment that was associated with the upgraded conventional idler based conveyor. Air supported belt conveyors have been designed to incorporate:

- Belt scales
- Self cleaning magnetic separators
- Sampling systems
- Explosion relief panels
- Fire suppression systems
- Heat detecting cables/systems

WWW.CEMAT.ORG Issued to: Document Control for 24, 2017 (Prabhakar Thirumal, Suanluang, , Thailand

- Misalignment switches
- Recirculating dust filters
- Belt tracking devices

Installation

With the exception of vertical, horizontal conveyor tolerances and idler installation and adjustments, the "Conveyor Installation Standards for Belt Conveyors Handling Bulk Materials" Appendix D should be followed. Since the air film thickness is roughly 1/16 inch or (1.6 mm), very close tolerances in horizontal or vertical planes have to be maintained. All bed plate joints have to match perfectly. High spots may cause wear to the belt and the bed plate. The gasketing between plenums is vitally important and leaks cannot be tolerated. Manufacturer's installation standards must be followed.

It is strongly suggested the air supported belt conveyors be assembled under the supervision of the manufacturer's installation supervisor. Most air supported belt conveyor manufacturers offer shop assembled plenum sections for new installations into 40 foot long (12 m) assemblies, saving considerable field installation costs.

Maintenance

One of the greatest benefits of air supported belt conveyors is the lower maintenance requirements compared to conventional idler based conveyors. Because of the elimination of most idlers, and their lubrication, all idler maintenance, e.g. alignment, greasing and replacement, is all but eliminated. Because the conveyor is totally enclosed from loading area to discharge, load end spills, idler spills and return idler carryback accumulations are practically eliminated and dust escaping into the atmosphere can be better controlled.

Maintenance must be performed regularly on areas such as tail and discharge terminals, motor and gear drives, fan filters, belt cleaner adjustment and take-up operation. The air supported belt conveyor manufacturer should furnish a complete maintenance/installation manual with the conveyor which includes a complete preventative maintenance check list. While all components of an air supported conveyor system require periodic inspection and preventative maintenance it is absolutely critical to maintain center loading and a clean air filter to deliver the specified air volume and pressure to realize the benefits of an air supported conveyor.

Advantages of Air Supported Conveyors

Compared to conventional idler supported conveyors, air supported conveyors offer numerous advantages, including:

Maintenance:

- Possible to eliminate all troughing idlers between tail and head pulleys on the carrying side.
- Optional elimination of return idlers with air supported return.
- Increased belt life due to lower tension and minimal contact with components or structure.

Power Requirements:

- Air film friction vs. idler bearing and seal friction losses.
- No belt sag or idler roll indentation losses.
- Reduced belt tension requirements for comparable capacity.

www.CEMAnet.org (IP: [redacted]) on Nov 27 2017 to Pattaratorn Smitabhindu, Thailand

Environmental and Safety:

- Conveyor can be totally enclosed, reducing dust and spillage to environment.
- Eliminates most moving parts between loading and discharge.
- Encloses pinch points along conveyor run.
- Average 10 to 15 dB less noise than conventional idler conveyors.
- Substantially fewer moving parts compared to a conventional conveyor.

Design And Operation:

- Can convey at higher incline angles due to no lifting of material at each idler.
- Greater capacity possible because cross section areas can be larger than conventional conveyors.
- Multiple load points are possible.
- Can be used with vertical convex curves.
- Reduced material degradation because there are no idlers agitating the material.
- Increased spans are possible when plenum is designed to be part of the structure.
- Can eliminate catwalks along the carrying run.
- Tracks true when center loaded due to the action of gravity and the low friction air film.
- Increased reliability due to dramatic reduction in the number of moving parts.
- Can accommodate most standard accessories and process equipment.

WWW.CEMANET.ORG has issued this document (14604) on Apr 24, 2017 to Pasapong Sirakoon (sirakoon@siamluang.com, Thailand)

Disadvantages of Air Supported Conveyors

Maintenance:

- Belt Cleaning is more critical especially when the return run is air supported.
- Spillage from overloading may accumulate between the belt and plenum clogging air supply orifices.
- Fan requires filter maintenance to ensure clean air in plenum.
- Condensation from moist heated product or humid environments may require use of air preheating.

Power Requirements:

- Fan(s) are required which may increase the overall power requirements.

Environmental and Safety:

- Air volumes injected to float the belt need to be vented or filtered to control dust.

Design and Operation:

- Closer fabrication tolerances required to prevent leaks and uneven joints between plenum sections.
- Belt must be vulcanized for normal operation. Temporary repair mechanical splices must be recessed.
- Off center loading causes greater mistracking than conventional idler conveyors.
- Can not accommodate horizontal curves.
- Belt scales and other accessories often require interruption of the air supported conveyor.
- Initial cost of air supported conveyors is slightly higher and design errors are more expensive to rectify than with conventional idler conveyors.

Air Supported Conveyor Engineering

Many of the air supported belt conveyor manufacturers use the CEMA Historical or DIN methods as a basis for calculation belt tensions and conveyor power requirements. Figure 16.20 is used as the basis for the following requirements and examples. The conventional conveyor requires 12,380 lbs (55 kN) of pull at the head pulley to maintain belt movement according to the DIN method. In the DIN method an equivalent friction factor of 0.04 is applied to the weight of the belt and material to estimate the main resistances and 79% of the tension is used to lift the material. The main difference in the power requirements between the idler supported conveyor and an air supported conveyor in Figure 16.20 will be the reduction in the friction value plus the addition of the fan power requirements. There should also be a reduction in dust collection fan size for the air supported conveyor but this component of the predicted energy consumption is not included. In the example that follows it is assumed both the conveyor carrying and return run are air supported.

WWW.CEMANET.ORG Issued to: (604) 10 Apr 2017 Pattarapon Sritrakool, Suanluang, , Thailand

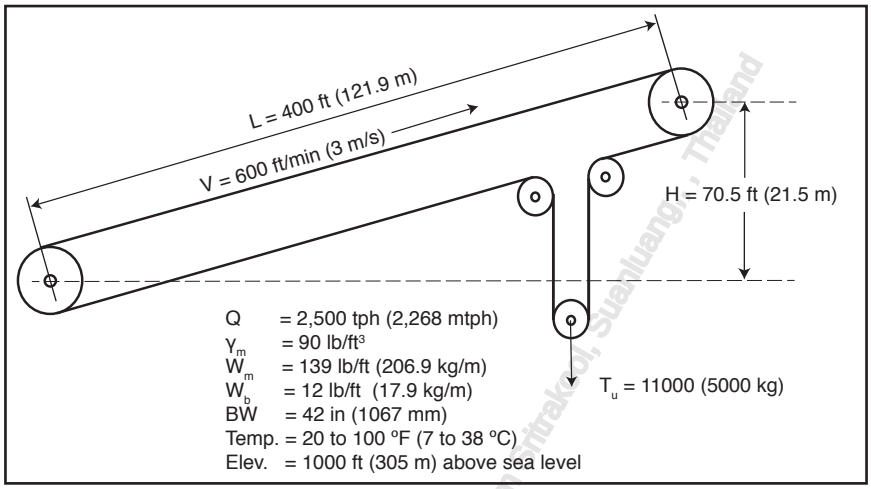

Figure 16.20
Air supported conveyor example conveyor

L_{if} = Inlet filter
L_{rg} = Inlet regulating gate (damper)
L_{id} = Inlet ductwork
L_{is} = Inlet silencer
L_{dd} = Discharge damper
L_{ds} = Discharge silencer
L_{hd} = Discharge ductwork (rigid duct - length varies)
L_{fd} = Discharge ductwork (flexible duct- final connection)
L_{pl} = Plenum losses
L_{sum} = Sum of above losses

P_{flb} = Pressure to lift a fully loaded belt
P_{eb} = Pressure to lift an empty belt
R_{rsf} = Modifying factor

Figure 16.21
Air flow resistance losses nomenclature

www.CEMA.ORG is issued to [illegible] document 1420 on Nov 24, 2017 - Patarapon Intrakot, Suanluang, , Thailand

Air Supply Requirements and Example

Each manufacturer calculates the fan requirements based on the belt width, capacity, plenum length and design. The most basic requirements for the fan are the required static pressure to float a fully loaded conveyor prior to start up and the velocity pressure in the plenum needed to maintain the air film while the conveyor is running.

Air volume and pressure are the two most important aspects of designing air supported belt conveyors. It is extremely important and critical to provide adequate air flow and pressure to support the belt under all loading conditions. The air discharge orifice spacing and diameter should be established for each given condition. Orifice spacing and diameter may differ between manufacturers therefore volume and

pressure requirements may differ. Consequently, fan sizes and fan motor horsepower may differ between manufacturers.

Fan volume and pressure are determined by a combination of:

- Belt weight
- Product load
- Belt tension
- Ambient air properties
- Plenum cross section
- Plenum air hole diameter
- Plenum air hole spacing

Air volume and pressure need to be calculated to reduce the frictional resistance between the belt and the bed plate. In addition, the pressure calculation should include:

- Plenum losses
- Duct losses
- Intake filter losses
- Intake and/or exhaust (silencers) resistance
- Intake and/or exhaust dampers / gates resistance
- Fan efficiency
- Modifying factor, R_{rsv} = 1.10

Fan horsepower calculations should include:

- Site evaluation
- Ambient operating temperature range
- Air density
- Actual fan efficiency from manufacture or use 83%.
- Actual filter efficiency from manufacture or use 80%.
- Actual motor efficiency from manufacture or use 96%.
- Modifying factor R_{rsf} = 1.10

Experimentation dictates that 10% correction factors, R_{rsf} and R_{rsv} = 1.10, should be added to the air flow and fan power calculations for inclined air supported conveyors. Fans are sized for volume and pressure. Most air supported belt conveyors can be supplied with "off the shelf " low volume, low pressure centrifugal fans.

WWW.CEMANET.ORG has licensed this document (3960) on Aug 24, 2017 to Pattarapon Sirakool, Suanluang, , , Thailand

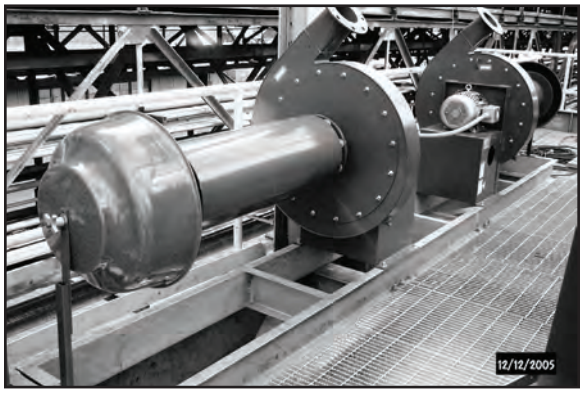

Figure 16.22
Typical fan arrangement

Distribution of air in the bed plate section is important. For efficiency purposes, the fan should be placed as near to the center of the conveyor as possible. However, as long as bed plate and duct losses are properly calculated, fans may be placed near the tail or discharge sections where power is readily available. Past experience dictates that, due to unforeseen circumstances e.g. climate conditions, conveyor alignment during installation, improper assembly of conveyor plenums, possible leaks at conveyor plenum joints, etc., fans need to be conservatively sized. A duplicate fan may be incorporated in the air circuit to ensure against potential down time.

Fan Selection Example

The fan requirements and arrangements for an air supported belt return are similar. Some manufacturers support the return belt with separate fans, others proportion the air of one fan to support both the bed plate and return sides.

Ducts between the fan discharge and plenum inlet should be designed to create the least amount of resistance. To minimize duct resistance, duct diameters should be at least 2 inches (50 mm) larger than the diameter of the fan discharge and elbows should be minimized. Experience dictates that flange joints should be caulked and bolted and the duct should be fabricated to withstand pressures at least 3 times the fan pressure.

Total pressure carrying side = $L_{sum} + P_{flb}$ = 51.0 in wg (12.7 kPa)
Carrying side fan pressure = $(L_{sum} + P_{flb}) \times R_{rsf}$ = 56.0 in wg (13.9 kPa)
Total pressure return side = $L_{sum} + P_{eb}$ = 22.5 in wg (5.6 kPa)
Return side fan pressure = $(L_{sum} + P_{eb}) \times R_{rsf}$ = 24.0 in wg (6.0 kPa)

Figure 16.23
Air supported conveyor fan pressure example

Volume Calculations Involve:

- Cross sectional area of plenum
- Weights of belt load per foot of conveyor
- Plenum hole spacing and diameter
- Nozzle velocity through holes

Carrying Side Volume = 2,360 cfm (66.0 m^3/min)
Carrying Side Fan Selection = 2,360 cfm $\times$ R_{rsv} = 2,950 cfm (82.6 m^3/min)
Fan Selected 3000 CFM @ 56 in wg (84 m^3/min @ 14 kPa)

Return Side Volume = 1,260 cfm (35.3 m^3/min)
Carrying Side Fan Selection = 1260 cfm $\times$ R_{rsv} = 1,575 CFM (44.1 m^3/min)
Fan Selected 1,600 CFM @ 24 in wg (45 m^3/min @ 6 kPa)

Figure 16.24
Air supported conveyor fan selection example

www.CEMANET.ORG Has a perpetual agreement (24604) on Apr 20, 2017 to Pt Pradeco Sritara (Pt Suanluang), Philippines

Fan Motor Sizing Example

$$\text{Fan Motor Power} = SHP \times A_f \times T_f \times R_f \times F_e \times F_{2e} \times M_e \ [Hp\ (kw)]$$

Equation 16.25
Fan motor power equation

Where:

SHP	= Fan shaft power [Hp (kw)]
A_f	= Fan altitude correction factor (dimensionless)
T_f	= Fan temperature correction factor (dimensionless)
R_f	= Fan rarefication correction factor (dimensionless)
F_e	= Fan efficiency (dimensionless)
F_{2e}	= Filter efficiency (dimensionless)
M_e	= Motor efficiency (dimensionless)

Note: Correction factors are obtained from the fan manufacturer and are based on the type of fan selected (e.g. centrifugal) so no specific result is given for Fan Motor Power.

Dust Collection Requirements Example

Dust collection requirements for air supported conveyors are usually quite different from those for conventional idler based conveyors because air supported conveyors are usually totally enclosed and the amount of induced air at the discharge is often offset by the air supplied to lift the belt. While central dust collection can be used most manufacturers use individual unit collectors at the critical points. The following input criteria for sizing a dust collector for an air supported conveyor are suggested:

Q	Bulk material design capacity
γ_m	Bulk density of material
V	Belt speed
W_m	Material weight per unit length on conveyor
L_2	Conveyor length
W_{cf}	Material volume on belt
P_d	Product volume displacement
A	Air requirements needed to lift load & belt
R_{rsd}	Factor for air distraction (Contact CEMA member)

Table 16.26
Input criteria for air supported conveyor dust collection

WWW.CEMANET.ORG has issued this document (14490) on Apr 4, 2017 to Rattanaporn Thanakijkasemsuk (suenluang@..., , Thailand

Vented Air

$$W_{cf} = \frac{Q}{V \times \gamma_m} \qquad \text{(Ref. Chapter 4, } W_{cf} = A_s\text{)}$$

$$W_{cf} = \frac{2{,}500\,\frac{t}{h} \times 2{,}000\,\frac{lbf}{t}}{600\,\frac{ft}{min} \times 60\,\frac{min}{h} \times 90\,\frac{lbf}{ft^3}} = \frac{5{,}000{,}000\,\frac{lbf}{h}}{3{,}240{,}000\,\frac{lbf}{h\text{-}ft^2}} = 1.54\ ft^2\ (0.42 m^2)$$

Figure 16.27
W_{cf}, Material cross sectional area on belt example

$$A_v = (W_{cf} \times V) + A$$

$$A = 3{,}000\,\frac{ft^3}{min} \text{ from 16.24}$$

$$A_v = \left(1.54\ ft^2 \times 600\,\frac{ft}{min}\right) + 3{,}000\,\frac{ft^3}{min} = 3{,}924\,\frac{ft^3}{min}\ \left(111.0\ \frac{m^3}{min}\right)$$

Figure 16.28
A_v, Air volume to be vented, not collected

Dust Collection at Load Point

$$P_d = \frac{Q}{\gamma_m}$$

Figure 16.29
P_d, Product volume displacement

$$V_d = P_d \times R_{rsd} \qquad \text{use } R_{rsd} = 1.10$$

$$V_d = \frac{Q}{\gamma} \times R_{rsf} = \frac{2{,}500\,\frac{t}{h} \times 2{,}000\,\frac{lbf}{t}}{90\,\frac{lbf}{ft^3} \times 60\,\frac{min}{h}} \times 1.10 = 1{,}019\,\frac{ft^3}{min}\ \left(28.8\,\frac{m^3}{min}\right)$$

Figure 16.30
V_d, Suggested volume for dust pick-up

Power Requirements and Example

Because air supported conveyors do not have many, if any, idlers so the main difference in the tension calculations are those related to idler related losses. All other belt tension calculations in Chapter 6 can be applied to the design of air supported conveyors. In place of idler related losses the following design criteria are suggested:

- For losses between the loaded air supported belt and the bed on the carrying run, most manufactures use a coefficient of friction between 0.02 and 0.1.
- For losses between the air supported belt and the bed on the return run, most manufactures use a coefficient of friction between 0.02 and 0.1.

WWW.CEMA.ORG as issued this document (14604) on Apr 25, 2017 to Pitirapom Sritrakool, Suanluang, Thailand

- For all other losses, such as tension required to: lift the load, accelerate the material, skirtboard friction, seals, pulley bearings and common accessories, use the appropriate calculations in Chapter 6. (**Note:** This example uses the CEMA Historical Method as summarized in Appendix C)

Given:

F_f = Friction factor (dimensionless)
L_n = Loaded length of belt 394 ft (120 m)
L = Length along belt line 400 ft (121.9 m)
H = Lift 70.5 ft (21.5 m)
γ_m = Bulk material density 90 lb/ft^3 (1442 kgf/m^3)
Q = Bulk material Loading rate 2500 tph (2268 mtph)
V = Belt speed 600 fpm (3.05 m/s)
BW = Belt width 42 in (1067 mm)
W_b = Belt width per unit length 12 lb/ft (17.9 kgf/m)
W_m = Weight of material per unit length 139 lb/ft (206.8 kgf/m)
β = Troughing angle 45°
SF = Capacity design factor with standard edge distance 95%
Φ_s = Surcharge angle 20°

$$T_e = F_f \times (W_m + W_b) \times L + (F_f \times W_b \times L) + (W_m \times H) + T_{am} + T_{ac} + T_{ss} + T_{ssn} + T_{prn}$$

Equation 16.31
T_e, Net tension required at drive pulley

WWW.CEMANET.ORG has issued this document (1494) on Apr 2, 2011 to Satyajeet Shirgaokar, Siemens, , Thailand

$$T_e = F_f \times (W_m + W_b) \times L + (F_f \times W_b \times L) + (W_m \times H) + T_{am} + T_{ac} + T_{ss} + T_{ssn} + T_{prn} + T_Q$$

$$F_f = 0.02,\ W_m = 139\frac{lbf}{ft},\ W_b = 12\frac{lbf}{ft},\ L = 394\ ft,\ H = 70.5\ ft,\ \sum(T_{am} + T_{ac} + T_{ss} + T_{ssn} + T_{prn} + T_Q) = 2{,}219\ lbf$$

$$T_e = 0.02 \times \left(151\left(\frac{lbf}{ft}\right)\right) \times 394\ ft + \left(0.02 \times 12\left(\frac{lbf}{ft}\right) \times 394(ft)\right) + \left(139\left(\frac{lbf}{ft}\right) \times 70.5(ft)\right) + \sum T\ (lbf) =$$

$$T_e = 1{,}189.9(lbf) + 94.6(lbf) + 9{,}799.5(lbf) + 2{,}219(lbf) = 13{,}303\ lbf$$

$$\text{Demand Power} = \frac{T \times V}{33{,}000} = \frac{13{,}303\ (lbf) \times 600\left(\frac{ft}{min}\right)}{33{,}000\left(\frac{ft\text{-}lbf}{min}\right)} = 242\ HP\ (181kw)$$

Assume fully loaded friction, $F_{f-fully\ loaded} = 2 \times F_f = 0.04$ for starting under full load

$$T_{e-fully\ loaded} = 0.04 \times \left(151\left(\frac{lbf}{ft}\right)\right) \times 394\ (ft) + \left(0.04 \times 12\left(\frac{lbf}{ft}\right) \times 394(ft)\right) + \left(139\left(\frac{lbf}{ft}\right) \times 70.5\ (ft)\right) + \sum T(lbf) =$$

$$T_{e\text{-}fully\ loaded} = 2{,}379.8\ lbf + 189.1\ lbf + 9{,}799.5\ lbf + 2{,}219\ lbf = 14{,}587.4\ lbf$$

$$\text{Fully Loaded Power} = \frac{T \times V}{33{,}000} = \frac{14{,}587.4\ (lbf) \times 600\left(\frac{ft}{min}\right)}{33{,}000\left(\frac{ft\text{-}lbf}{min}\right)} = 265\ Hp\ (198\ kW)$$

$$\text{Power with Reducer Losses} = \frac{\text{Power}}{E_{red}} = \frac{265\ Hp}{0.89} = 298\ Hp\ (222\ kW)$$

$\therefore$ Use 300HP (220 kW) motor

Figure 16.32
Air supported conveyor example drive motor selection

WWW.CEMANET.ORG has issued this document (14604) on Apr 24, 2011 (Pasan Jam Chitrakoot, Suanluang , Thailand

DISCRETE ELEMENT SIMULATION

Introduction

Engineering simulation is a powerful design and analysis tool used in many industries to virtually prototype and test the performance of equipment and process designs. Simulation enables a range of "what-if" scenarios to be iterated throughout a design process, each time providing an engineer with feedback on the success, or otherwise, of a proposed design. Computerized simulations are especially valuable for conveyors considering the custom nature and scale of many designs.

The Discrete Element Method (DEM) is a numerical method that simulates the bulk flow of granular materials such as ores, pellets, grains and powders. Just as computational fluid dynamics (CFD) is routinely used to simulate and analyze fluid flow, Discrete Element (DE) simulation is applied to solving design challenges involving the handling and processing of bulk materials (Figure 16.33). Simulating real bulk flow involves tracking individual material particles through space and time as they are influenced by the macroscopic to microscopic physical environment. Calculations for the many time increments (steps) necessary for realistic simulations due to high speeds and minute deformations over a multitude of particles has been a major challenge to the practical use of DEM. In addition, material properties and their complex interaction with pressure and shear speed continue to be a major research effort. Though DEM developments have allowed larger models with smaller and more descriptive particles, industrial applications have benefited from its use as a prediction of behavior and for the insight it provides despite the use of approximate properties and the need for calibration and interpretation.

This section presents a methodology to allow DE simulation to be used effectively as part of a transfer point design process. Chapter 12 describes common general steps in using DEM software so the emphasis will be to outline the steps needed to link real material bulk flow behaviors to those observed in simulation, and provides examples of how DEM can be used to provide additional insight into common engineering concerns during the transfer point design process.

Pioneering applications of the DEM dating to the turn of the century provided useful insight to bulk flow for sizing and location for free flowing materials sliding on chute components. More recently DE simulation and deployment methodology has advanced to the point where it can now be used with confidence by designers of conveyor transfer equipment to provide them with key engineering information and insight into material flow and interactions with equipment throughout the design process. Such insight, and the ability to investigate suitability of a design prior to fabrication and commissioning, allows conveyor transfer design engineers to make more informed decisions during the design cycle and develop designs with a higher degree of confidence.

WWW.CEMANET.ORG has a non-exclusive, non-transferable, limited license for use by CEMANET.ORG Student (c4b1d0) on May 24, 2017. © Bulk Solids Handling Society, Scotland

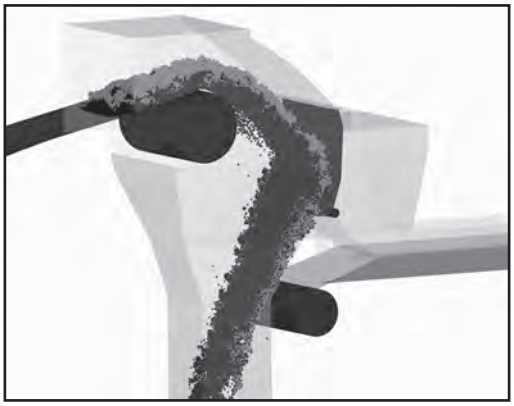

Figure 16.33
DE simulation of flop gate

The increased use of DE simulation in conveyor transfer design and trouble-shooting has been driven both by advances in desktop computing power and by the availability of easy-to-use software. Modern, state-of-the-art DEM software tools can model a wide range of bulk materials, including dry fine powders, highly cohesive mined ores, and run-of-mine (ROM) materials. More recently, advances in DEM software technology and methodologies for effective deployment have given rise to specialist DEM software tools for transfer point design which do not require DEM expertise to use.

While the technology has and will continue to advance, simulation is an approximation of the real-world. To allow fit-for purpose flow behaviors to be achieved in DE simulation, approximation errors must be minimized. Modeled accuracy of the physical properties of the bulk solid affects the material flow behaviors in the simulation.

The DEM is a simulation tool and not a design methodology. It is to be used in combination with experience, intuition, and the design standards and guidelines of the engineer and company in whose hands it is being used. Due in part to a lack of understanding, clients may request a "DEM transfer" believing that a specific set of guidelines were followed in the design. This is not the case. DEM simply enables the designers to test their system design under a wider range of conditions prior to fabrication and implementation.

Benefits of Simulation-Based Design for Transfer Points

During a conveyor transfer point design process employing DE simulation, the design engineer uses the results of analysis of the simulated flow to identify the most optimized design configurations, mitigate risk, and boost confidence throughout the process - maximizing the chances of achieving a right-first-time design. DEM provides engineers with valuable insight into the effectiveness of a potential design and helps identify any areas where design improvements could be made.

Conveyor systems account for a small percentage of the initial cost of a mine plant, but malfunctions or sub-optimal performance in conveyor transfer performance can result in substantial financial cost from delayed-start up, unscheduled downtime, production below rated throughput, and the capital cost of replacement and buffer equipment. The leading mining companies are aware of the benefits that use of DE simulation, if properly deployed, can bring to the design of the equipment they commission and now routinely expect contractors to validate their designs using DE simulation.

Common concerns in conveyor transfer point design that can be identified and addressed through DE simulation include:

- Uncontrolled flow regions
- Blockage
- Unexpected flow streams and trajectories
- Off-centered loading onto belts
- Unsteady flow rates
- Excessive impact speeds
- Segregation
- Spillage
- Excessive belt and chute wear
- Location of wear liners and plates
- Determination of operational limits and capacities

WWW.BULKONLINE.COM has licensed this document (1660) on Apr 24, 2017 to Pazzaglia Strakoni Giovanni, Italy

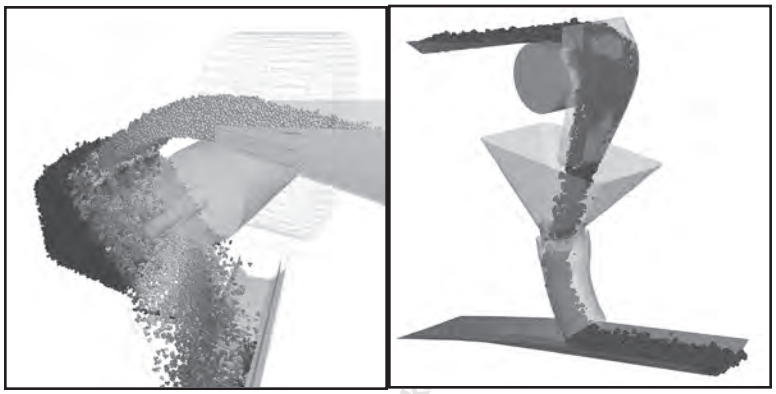

Figure 16.34
DE simulation of velocity on right and wear on left

By identifying potential issues in the design phase, improvements and adjustments can be made well ahead of fabrication and installation. Fixing potential problems during the design stage reduces maintenance costs for the life of the conveyor. Conveyor manufacturers that include conveyor transfer design in their offering, and Engineering Procurement Construction Management firms (EPCMs) that handle such design work can gain advantage both in terms of the reliability and performance of the equipment they design, and in their ability to win business from operators seeking design solutions employing the best available design technology.

Representing Bulk Flows with DEM Material Modeling

At the center of any DE simulation is the 'material model' - the virtual representation of the bulk material (Figure 16.35). In DE simulation bulk materials are represented as a collection of individual elements known as 'particles'. During a simulation the particles are free to move independently, with their motion governed by the collision forces taking place with each other and equipment surfaces. Additional forces from gravity, or from the motion of a conveyor belt, are also taken into account to simulate the flow of bulk material through a system.

When setting up a simulation using DE software, the parameter inputs to the DEM material model are ultimately what dictates the manner in which a simulated material behaves. The DEM material model includes a number of components, including the definition of the shape and size of the representative particles; the required physics models (for example, friction and cohesion); material properties such as density; and values for the parameters that are required for the physics calculations. The physics models use both properties of the material and properties that describe the interaction of the materials with themselves and with materials they contact.

WWW.CEMANET.ORG this set is this document (c) Apr 24, 2014 to Pan Yuan from Central

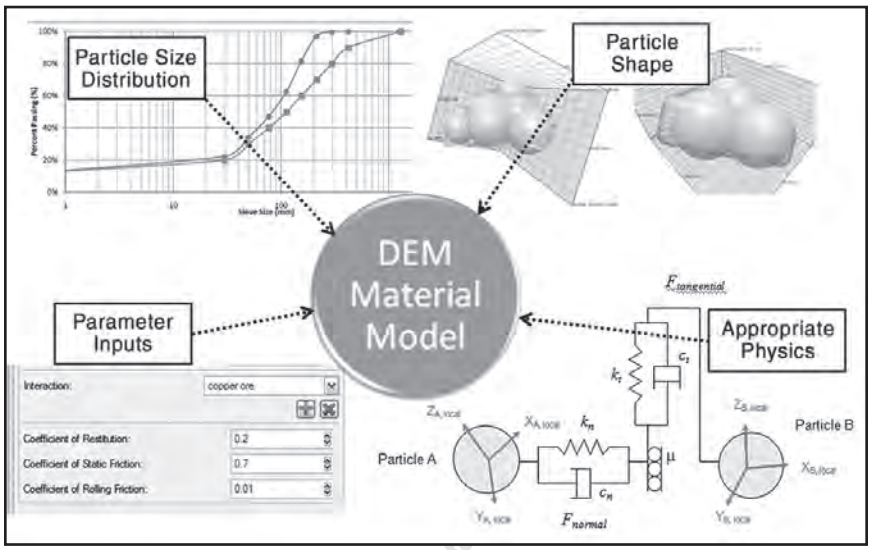

Figure 16.35
A DEM material model in schematic form.

The material model comprises a number of inputs that ultimately determine the bulk properties and flow behavior observed in simulation. Each will influence the simulated bulk material behavior in a DE simulation and each need to be defined to reproduce the bulk material flow within the virtual environment through the sensitivity and importance of each may vary with the flow dynamics being modeled.

Engineering Use of DEM on Conveyor Transfers

DEM has found use in a wide variety of design, analysis and material science efforts since pioneering developments through the last quarter of the last century. Its early use on conveyor transfer designs was due to the unmet need for a design tool applicable to the varying geometries of conveyor transfers and the dramatic and frequent problems with transfers but also because the often dominating effects of gravity and kinetic energy are accurately predicted so valuable results could be obtained even with large particles and approximate material models.

Users of DEM have an advantage over designers that do not have access to the technology. Once a desired material model is known, a realistic simulation can be performed. The system performance can be analyzed and design decisions made regarding its performance.

Though the best available accuracy is always desirable and extra effort is sometimes necessary for useful results, several levels of the application of DEM are used to accommodate its inherent limitations and costs.

Simulation Goals

There are two different goals when performing a simulation. Is there a need to determine whether this simulation exactly represents the system performance, or is there simply a need to show a level of improvement? In other words, is the goal to prove or improve system performance?

WWW.EMANET.ORG has licensed this document (1460) on 12/24/2017 to Patt

If the goal is to prove system performance, fine-tune as closely as possible the material model in order to reduce the potential for errors. In these situations, perform tests upon the material, both to model how the material behaves as it flows past itself and to model how the material flows when in contact with chute wall liner material, belts, belt cleaners, and other system components.

On the other hand, if the goal is to improve system performance, observers of two simulations can determine whether the system in one performs better than the other though the properties may not closely match reality. Indeed, if an existing chute can be observed, its behavior can often be replicated with 'calibrated' materials so that improvements with similar flow behaviors can be accurately evaluated. These "properties" could also be used in similar chute designs with the same materials.

Safe Design and Sensitivity Analyses

There are opportunities to build in a safety factor into the results by skewing the results in a conservative manner. The result of the analysis is a chute transfer that will perform beyond expectations. Examples of said adjustments are listed below:

- Increase the flow rate of material to determine the rate at which the chute will become blocked.
- Artificially reduce the friction factor between the material and the receiving belt in order to put the burden of performance on the transfer chute.
- Artificially reduce the friction factor between the material and the chute liners in order to increase the speed of the particles at the exit of the chute and thus the wear conditions at the receiving belt.
- Artificially increase the friction factor between the material and the chute liners in order to induce a blockage.
- Insert a number of larger-than-expected particles into the flow stream to induce a blockage.

System-Dependent Sensitivities

Depending upon the flow mechanisms in effect within the material handling system, and the prevalence of those flow mechanisms, the accuracy of the simulation will depend more heavily upon the accuracy of certain properties in the material model.

In low impact, sliding-dominated systems, the properties that have the greatest effect upon the system behavior are the friction and the cohesive action between the particles and the system components. Relatively speaking, these can be found easily through experimentation. In these systems, there will always be some particle-on-particle shifting, but the overall effect of this shifting action upon the system behavior is minimal. In these cases, the need for accuracy in regard to particle-on-particle friction and cohesion is reduced.

In the example in Figure 16.36 the upper Hood and lower Spoon shape and location were developed to maintain the flow stream cross section and particle kinetic energy to minimize build up and wear on the inclined receiving conveyor.

WWW.CEMAENG.ORG has access to this content (1.1.14) on Apr 2, 2017 © Kasetsart University, Thailand

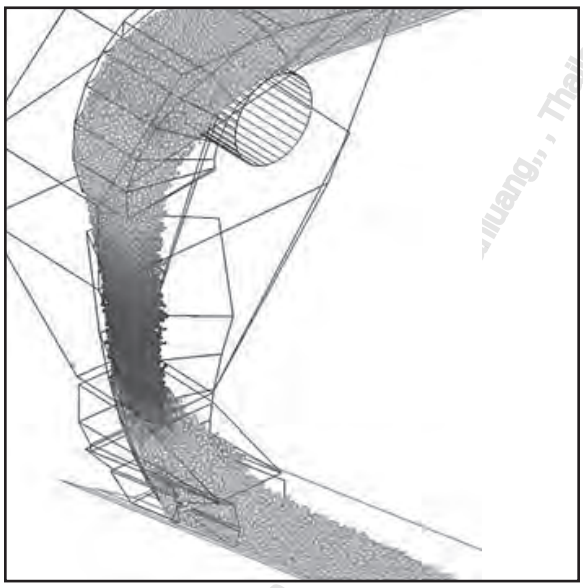

Figure 16.36
DE simulated flow of wood pellets using a hood and spoon chute

In systems where a significant amount of particle-on-particle shifting takes place, the properties that have the most significant effect upon the system behavior are inter-particle friction and inter-particle cohesion. To a lesser degree, the particle size and particle size range will also have an effect. In these systems, there will be some particle-on-system component sliding, but these will have a reduced effect on overall system performance.

Systems containing a significant amount of particle-on-particle shifting exhibit:

- Stream deformation
- Turning stream - thickening
- Decelerating stream - thickening
- Converging streams
- Orifice flow
- Rockboxes/Deadboxes
- Splash

These behaviors are also associated with wear, dust and fugitive materials so are often avoided in the class of controlled flow transfers associated with energy conservation and Hoods and Spoons.

However, many materials and applications require designs involving material mixing and therefore more accurate material models. The flow behavior shown in Figure 16.37 illustrates a non-streamlined flow. It may match intuitive expectations but will likely be different or even back up with actual material properties.

www.COMMET.O...has issued this document(14604)on Apr 24, 2017 to ...luang, , Thailand

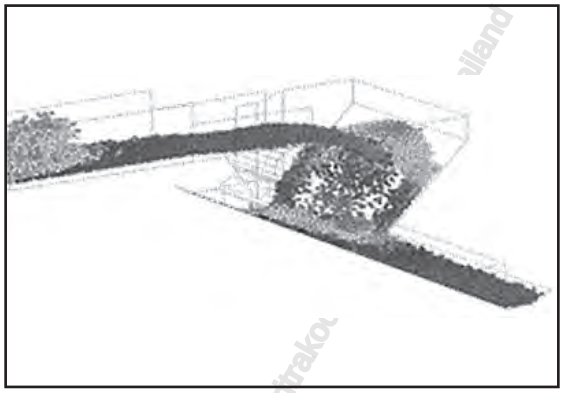

Figure 16.37
Prediction of behavior of an impacting flow stream

The Importance of Appropriate Material Model Definition

DE simulation has the capability to provide valuable insight into how well a transfer point design is likely to perform. To have the highest confidence in the bulk material flow prediction, however, it is imperative that an appropriate deployment methodology is used. It is not possible to "guess" or "cut-and-paste" the input values from a "similar" material and have confidence in the simulation results. Simulations performed in this manner will have little connection between the actual material flow behaviors and those represented in the simulation. Equally, DEM "know-how" alone is not a substitute for a robust process for determining the material model parameters. Making design decisions based on such approaches is risky.

As an example, consider the case of the design of a large transfer tower carrying a cohesive ore. This example is based on a real-life design project involving an expansion of mine production. Figure 16.38 shows the output of a DE simulation performed using a material model that was composed of best-guess input values.

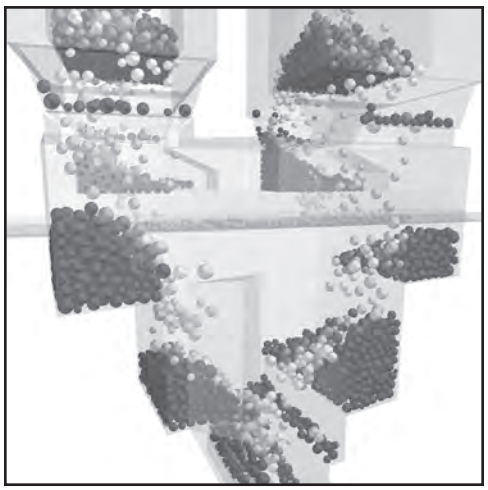

Figure 16.38
DE simulation using un-calibrated material model

WWW.CEMANET.ORG has issued this document (1403 A01 Apr 4 2017 to Polyrapoa Sfirakou

An un-calibrated DEM material model was used in simulation of the flow of ore through this transfer tower. The results erroneously indicated an acceptable level of performance for the design. However, when presented with these results, the mine operators had little confidence that the behaviors being presented reflected those they were used to seeing on site. This was an ore with a high moisture content and quite cohesive. The large, freely-flowing, spherical particles shown in the DE simulation depicted in Figure 16.38 had little in common with the flow characteristics of the actual material being handled at this mine.

Figure 16.39 shows a DE simulation of the same transfer tower design, however this time the inputs to the DEM material model were determined through a calibration process that involved the dynamic physical testing of ore sampled from the site.

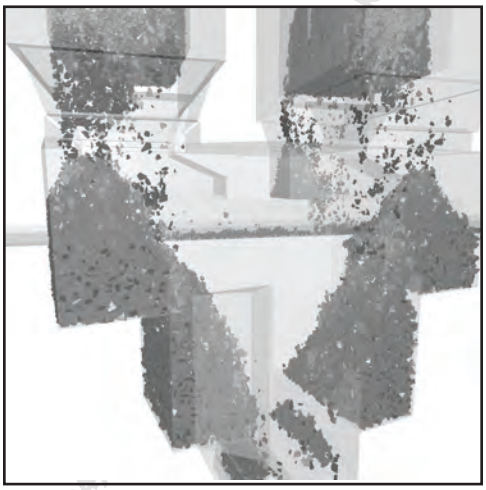

Figure 16.39
DE simulation using a calibrated material model

The calibrated DEM material model, based on the dynamic flow behaviors of the real ore, was used to reassess the transfer tower design depicted in Figure 16.38. In this case the transfer tower was shown to block shortly after the conveyor started delivering to the transfer point.

The behaviors shown with the calibrated material model agreed with the behavior observed by the mine operators and their understanding of how the cohesive ore behaved during transport and transfer through their plant. The confidence gained through use of a material model based on physical testing enabled the design engineers to make better informed decisions on both the design and the commissioning time line. They were then able to address the causes of the blockage ahead of fabrication and installation. Such confidence in the DE simulation results is only achievable through the establishment of a link between real material flow behaviors and the simulated material model.

Applying DEM with Higher Confidence

There are times when the risks associated with making design decisions based on non-calibrated DE simulations are high. To reduce these risks and to realize the benefits of using DEM as part of a simulation-based design process a rigorous method linking the physical material with the simulated material is employed. In common with other types of engineering simulation tools such as CFD and FEA, DE simulation approximates real-world flow behaviors. To mitigate the approximation errors the inputs into a simulation must be derived from measurements of the dynamic behavior of the actual bulk material.

The following steps outline an effective approach to producing a DEM material model that provides the

required linkage. The approach entails a combination of physical testing followed by material model parameter calibration using the test measurements.

Material Sample Collection

The first task is the collection of representative samples of the bulk material that will be used in a testing program. Ideally, material samples should be collected on site from the location of the conveyor transfer point. If a design project is based on multiple transfer designs conveying material with variable characteristics, for example during processing operations, then multiple representative samples should be collected for testing.

Where material is not available, as may be the case during the preliminary design stages of a new mine and processing plant, then prepared core samples, or material taken from a similar site and believed to have similar flow characteristics, should be used. It is usually possible to obtain representative samples later on in the design cycle. Sampling for the purposes of providing test material for DE simulation during design stages is likely to become more common, but protocols must be put in place to include such tests. DEM material model calibration fits well within sample preparation work flows, as it is conducted with crushed samples prior to crushability, grindability and concentration tests that are now regularly used as standard throughout the minerals industry.

Physical Testing of Collected Samples

Physical testing is necessary to replicate the bulk flow behaviors and physical characteristics of a material when the goal of the analysis is to prove performance. The characteristics of a material sample, and the manner in which a material is tested, will ultimately dictate what insight can be achieved with DE simulation.

Flow velocity of a ROM or crushed ore material through a transfer point will typically be on the order of meters-per-second. Consequently, it is important that the physical testing approach is equally dynamic in order to build an understanding of how the material will behave at these flow rates.

The industry has traditionally employed consolidated stress tests to determine bulk material "flow" properties. These tests are actually measuring what is defined as a "flow" function or index, which is a measure of how easily flow of a static bulk can be mobilized. However, such testing techniques are inadequate for the purposes of measuring dynamic flow for DEM model calibration purposes because:

- The limited physical size of the testing equipment means only the fine portion of a particle size distribution can be tested.
- Testing takes place at very low shear rates with relatively high bulk compressive stresses, suitable for quasi-static conditions and applications such as buildup in chutes but usually applied to bins, hoppers, and stockpiles, but not representative of the dynamic flow behaviors dominant in conveyor transfers.
- The measured outputs from the tests are at a bulk-level and do not correlate with the required, particle-level interactions that dictate the flow behaviors in DEM.

The use of such quasi-static flow property test data in the calibration of a material model can lead to inaccuracies because the resulting material model would be based on size-reduced, slow moving material which is not representative of either the real material or its flow behavior through a transfer point. In lieu of a general flow theory, testing for bulk material inputs to DEM software should parallel the flow regime anticipated in the conveyor application. This relates to the stream velocity, depth and the nature of the autogenous shear plane where sliding occurs. Figure 16.40 shows the general behavior of granular flow

www.CEMANET.com Licensed to [illegible] (4604) on 24-Apr-2017 to Mahidol University, Salaya, Thailand

and illustrates the increase in flow resistance with speed and why common shear cell results are not always useful for DE simulations.

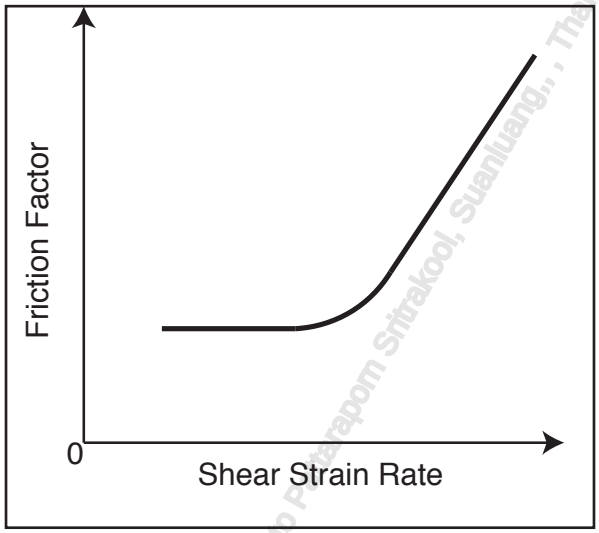

Figure 16.40
Flow resistance vs. speed comparing simulation results to lab results

WWW.OHANET.ORG This issue ID: 1 (4-4) on Nov 24, 2017 to Phatarapom Sritrakool, Suanluang, , , Thailand

It should be noted that sliding resistance on chute surfaces smoother than the material can be determined directly from typical shear tests as referenced above for use in DEM models.

Testing, Observation, and Calibration

Testing a material consists of two phases, performing a physical test upon the material often over a range of conditions, and conversion to quantities that characterize the material and conditions for relevant comparable loading. In the case of DEM, common engineering quantities of friction apply directly to chute surfaces but not to interparticle behavior nor to cohesion. This is because particle properties are idealized in DEM as well as because the relationship of particle to bulk properties and interactions of granular flow are not understood well and are still being researched. In summary, no standard test for dynamic bulk material nor universally applicable test method exists so that purpose developed test and measurements are the best option for DEM calibration currently available.

Rather than rely on conventional "flow" property testing, a DEM material model could be based on a set of tests that have been devised specifically for DEM purposes. Suitable tests have the following characteristics:

- Be sufficiently scaled to allow the real material to be tested without additional pre-processing and must include the full size range.
- Reproduce the flow regimes likely to occur within the transfer point.
- Provide measurements that correlate with those that can be observed in a DE simulation.

Application of an appropriate test program, designed specifically to meet the needs of DE simulation, is central to producing a material model that will reflect real-world flow behaviors in simulation.

Material Model Calibration

The purpose of the physical testing of the real material is to provide the basis from which a material model can be produced. Based on these laboratory results, the necessary inputs required for the components of the material model can be determined.

A process of parameter calibration is needed to define the set of inputs that will reproduce, with the required level of accuracy, the results acquired through physical testing. This calibration process is performed by simulating the physical tests within the DEM software, analyzing the simulation results to determine the equivalent measurements as the physical tests. By comparing the simulation and experimental measurements, and through the repeated adjustment of the parameter inputs to the DEM model, the simulation results and the bulk-scale measurements are converged. Once the simulated experiment produces a bulk behavior that is sufficiently close to the real-world experimental test then those parameters form the calibrated DEM material model that can then be used in simulations of full scale applications.

Since this DEM material model is based on testing of the real material, under representative flow conditions, a transfer point design engineer can have confidence that the results observed in simulation accurately reflect the real material flow behavior.

Calibrated Discrete Element Simulation of Transfer Point Designs

The confidence provided by a calibrated DEM material model enables design decisions to be made effectively and areas of concern addressed. The use of DEM is applicable to all stages of the design cycle and can be deployed alongside existing design methods to iterate through a variety of "what-if" designs and range of operating conditions to reach an optimum design.

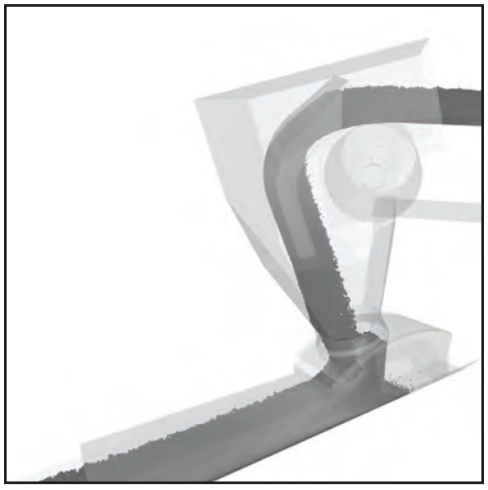

Figure 16.41
Calibrated DEM models can help validate designs

Calibrated DEM material models provide a design engineer with the greatest confidence and insight into the effectiveness of a transfer point design. The following examples demonstrate how common concerns and issues in transfer point design can be identified, and subsequently addressed, by DE simulation as part of the design process.

WWW.CEMANET.ORG has issued this document (2018-0) on Apr 24, 2017 to Pattarapom Jaeng-Seekhiew, , Thailand

Material Build-Up and Blockage

By visualizing and animating the flow of material as it travels through a transfer point, design engineers are able to identify areas where undesirable quantities of material are building up and potentially causing choking or blockage. Adjustments to a design can be made and trialled to promote flow, preventing such build-up from occurring.

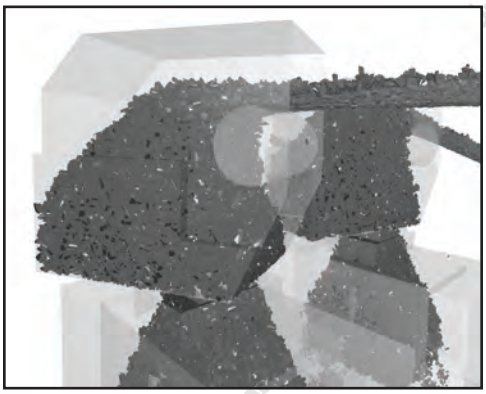

Figure 16.42
DE simulation of material build-up in a chute

Visualizing the flow of material within a transfer point can enable areas of excessive material build-up to be identified.

Excessive Impact Speeds

Material impacting on equipment at high speeds is often undesirable and can cause critical damage. DE simulation can be used to assess the velocity of a material as it passes through a transfer point and determine the speed with which it interacts with critical components such as receiving conveyor belts. The review of DE simulations can allow identification of high impact velocity regions as shown in Figure 16.43.

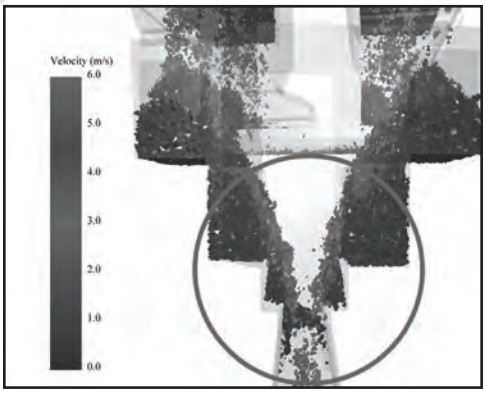

Figure 16.43
High impact region identified by DE simulation

WWW.CEMANET.ORG has issued this document to [illegible] on Apr 24, 2017 for Personal Use Only, , Thetford

Non-Symmetrical Flow and Dead Zones

Controlling the flow of bulk materials within a transfer point is essential to minimize damage to equipment, reduce dust generation and maintain the required operational capacity. DE simulation allows material flow behavior to be evaluated in all parts of a transfer point and potential issues, for example non-symmetrical flow and dead zones, to be identified.

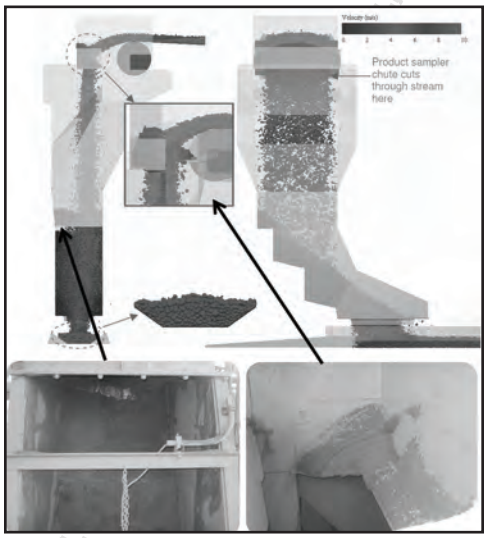

Figure 16.44
Flow problems identified through DEM simulations

Dead zones and undesirable flow behaviors can also be identified. A calibrated DEM model was used to assess real flow issues present in a bauxite transfer point shown in figure 16.44.

Material Spillage

Ensuring that material remains on the intended flow path is often a concern for transfer point design engineers. The complex motions and flow behaviors that are taking place when transferring a material from one conveyor to another are difficult to predict using traditional methods. Spillage of material due to uncontrolled streams has an impact both on the life-span of equipment, and also the safety of an operation. By simulating the material behavior, it is possible to identify problem areas where spillage may take place and make design adjustments to prevent it occurring

WWW.CEMANET.ORG has issued a sublicence (1466) on Aug 2014 , , Thailand

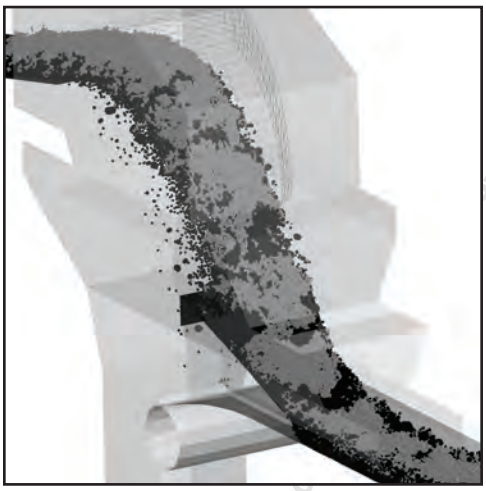

Figure 16.45
DE simulation showing material spillage ahead of the receiving conveyor.

Conveyor Belt Loading

To maximize the lifespan of conveying equipment, material must be presented onto conveyor belts in a controlled manner. Transfer points should be designed to ensure that sufficient throughput of material is maintained during operation, while at the same time minimizing damage to conveying equipment. Data has been collected for both the material impact velocity and the velocity in line with the conveyor belt motion.

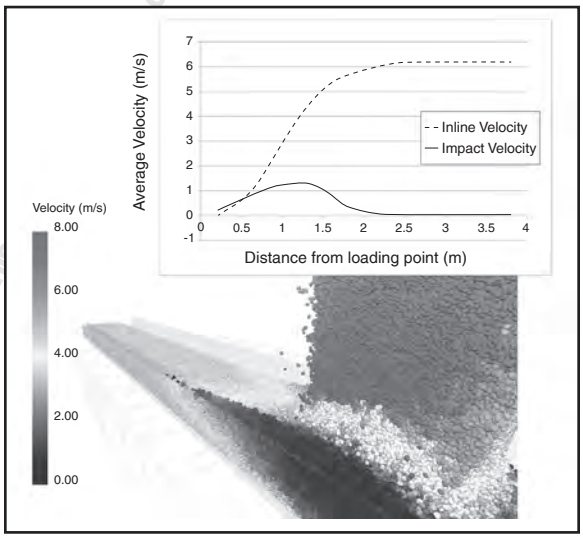

Figure 16.46
Velocity analysis of material loaded onto receiving belt

DEM can be used to evaluate the flow behavior of bulk materials as they are loaded onto a receiving conveyor belt. This includes material velocity profiles and conveyor loading distributions, as well as bulk flow behaviors such as 'boiling' which can ultimately lead to blockage of the transfer point.

Determining Operational Capacity

Ensuring that the operational needs of the end-user are met is critical during the design phase of a transfer point. DE simulation is able to provide important metrics, such as throughput and mass flow rates, to ensure these needs are met by a proposed design.

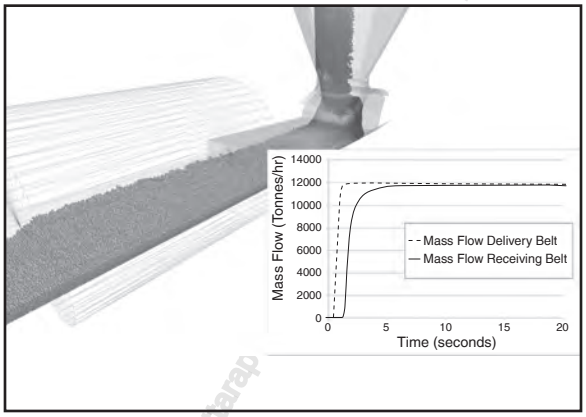

Figure 16.47
DE simulation used to determine mass flow rate exiting a transfer point

Determining the mass flow rate of material as it exits a transfer point, through use of the bulk flow sensor, is essential to ensuring capacity is achieved in a design. The examples shown here are just a sample of the insight that is possible when using DE simulation to investigate material flow behaviors in transfer points. Through use of calibrated DEM material models, design engineers can gain significant insight to address a wide range of common concerns during a transfer point design process.

DEM Conclusion

DEM simulation is increasingly being deployed as a day-to-day design and analysis tool in the design of conveyor transfer points. When used effectively, it provides design engineers with valuable insight into the performance of a transfer point during all stages of a design project.

In order to have confidence that the results of a DE simulation reflects the real-world behaviors likely to be present once a transfer is fabricated, a link must be formed between the real material and the simulation equivalent. This link should be based, as close as possible, on the dynamic testing of the material as it appears on site rather than relying on quasi-static tests. Through physical testing of the material and calibration of required DEM software inputs, a DEM material model can be produced that provides fit-for-purpose flow behaviors. This material model can then be deployed in DE simulation-based design of transfer points.

The linkage formed between the real and the virtual material flow behaviors provides confidence in the DE simulation results. The design engineer can use analysis of a simulated flow to identify the most optimized design configurations, mitigate risk, and boost confidence throughout the design process - maximizing the chances of achieving a right-first-time design.

www.CEMNET.ORG Thailand
Use subject to terms and conditions of the download agreement (3604) 21 APR 2017 © Patterap

GEARLESS CONVEYOR DRIVES

Introduction

The mining industry is increasingly turning towards overland conveyors as the preferred mode of transporting ore from the mine to the processing plant. A combination of ore grade and plant location is also driving demand for longer conveyor systems and greater conveying capacity. In Chile and Peru, for example, the mines are often at very high altitudes, while concentrator plants are located at lower altitudes to avoid equipment de-rating and provide plant employees with better working conditions. This, together with increasing process plant throughput due to lower ore body grades, means that longer conveyors and higher transport capacity are required. The most environmental friendly and cost-effective mode of transportation is undoubtedly the overland conveyor. This is evident in the frequency with which mining companies are selecting longer and higher capacity conveyor systems wherever possible. As a result of these new requirements, the entire production process is dependent on the availability, reliability and cost efficiency of the overland conveyor system.

Interestingly, the technology for gearless conveyor systems is the same as that used for mine hoist drive systems. The operating conditions in mine hoist applications are much more demanding than in overland conveyor applications. The number of start and stop cycles is significantly higher and the application is characterized by frequent changes between motor and regenerative operation.

Eliminating Maintenance-intensive Components

There are several different technologies for operating overland conveyors. Until recently, geared squirrel cage induction motors, geared wound rotor induction motors or even hydraulic motors were used. However, the need for larger capacity overland conveyor systems places greater demands on the performance characteristics of the drive train. Special attention must be paid to the belt and conveyor system mechanics, and to the requirements of the power grid as well. There is widespread acceptance today that electrical drive systems, which allow soft starting and soft stopping, are the preferred solution, as they protect the conveyor belt from high torque peaks and significantly extend the life cycle of the conveyor system.

Conveyor electrical drive systems conventionally consist of an electrical motor with a gear reducer and coupling or, in some cases with a fluid coupling, in a single or twin drive configuration. There are several disadvantages to controlling the start of belt conveyors with these devices. These include high tension peaks in the belt during start-up, high starting currents in the network, and higher system and load sharing losses - all of which result in increased maintenance costs and higher production losses. But by far the biggest disadvantage, especially with regard to the need for longer and higher capacity conveyor systems, is the size and efficiency of the required gear reducers.

To begin with, the power rating of the angular gear reducer is limited to just 3.2 megawatts (4,291 Hp) or 500 kilo newton meters (368,781 lbf-ft). Second, gear reducers are maintenance-intensive. Mean Time Between Failures (MTBF) for a gear reducer as a system consisting of bearings, sealings, filters, sensors, oil pumps, re-cooling unit, etc. is only 3-4 years. The bearings have an operating life of 8-10 years and when replaced necessitate a major system overhaul. Third, the operating life of the gear reducer is comparatively short. Whereas a conveyor system is designed to last 20-25 years, gear reducers last only half that time – about 10 years on average.

If we compare a conventional gear-based electrical drive system with a state-of-the-art gearless drive system, the differences are immediately apparent.

ANY USE OF THIS DOCUMENT CONSTITUTES ACCEPTANCE OF THE TERMS OF THE SME PERMISSIONS AND USAGE AGREEMENT. © 2014 SME Pitirapom Chaiyapa, Bangkok, Thailand

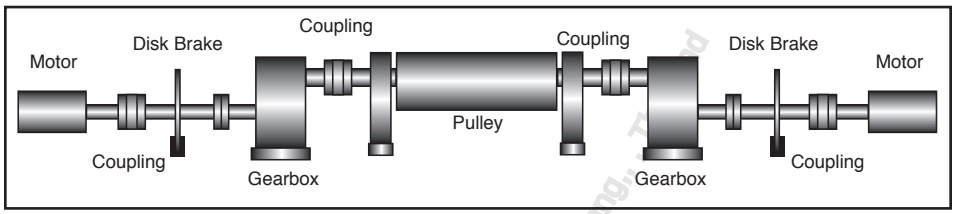

Figure 16.48
Geared high-speed twin drive with SCIM

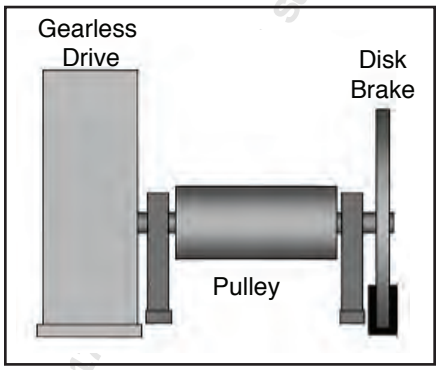

Figure 16.49
Gearless low-speed single drive with synchronous motor

To achieve a power rating of 6 MW (8,046 Hp) a conventional geared solution requires two high-speed drive systems, each comprising a squirrel cage induction motor, disc brake, couplings, and gear reducer equipped with numerous parts like motor and gear bearings, seals, tooth wheels and oil lubrication with re-cooling unit. The number of wear and tear parts is accordingly high (as many as 22) and the mean time between failures is correspondingly low (only 3-4 years).

A gearless electrical drive system, on the other hand, is strikingly simple and impressively long-lasting. The same power rating of 6 MW (8,046 Hp) is achieved with just one drive system, comprising a single 6 MW (8,046 Hp) synchronous motor. The number of wear and tear parts is no more than two, and the Mean Time Between Failures is as high as 30 years, which comfortably exceeds the expected operating life of the overland conveyor system. There is also a considerable reduction in footprint and the amount of instrumentation required.

The elimination of numerous mechanical and electrical components increases the reliability and efficiency of the overall conveyor system by several percentage points. The maintenance requirements of the gearless drive system are also substantially lower than with a conventional drive system. Gear reducer maintenance alone can amount to up to 5 percent of the mechanical maintenance budget. Lubrication and gear reducer cooling systems, together with their maintenance, are not required with gearless drives.

System reliability and cost savings can be improved even more by using a bearingless motor in the gearless drive system. A low-speed 6 MW (8,046 Hp) gearless and bearingless motor can reduce capital and operating expenditure (CAPEX and OPEX) by as much as 7 percent over a 20 year period compared to a high-speed geared twin-drive system. As a bearingless motor is virtually maintenance-free, the reliability and availability of the drive system is enhanced even more.

Gearless Low-speed Synchronous Motors

The synchronous motors in the gearless electrical drive system should preferably have 12 to 16 poles to minimize the number of design variations and make the motor as compact as possible. The available torque of a single motor ,> 2300 kN-m (1,696,392 lbf-ft) is sufficient to create the maximum possible torque that can be transferred between one pulley and its belt. Only one motor per pulley significantly reduces the amount of electrical and mechanical equipment required to power and operate the drive system (transformer, frequency converter, motor, foundations, driven shaft ends, etc). Furthermore, the disc brake can be installed on the opposite side of the pulley to provide easy access to both the motor and the brake. The interface between the motor and the pulley shaft is located outside the motor, which enables the pulley to be quickly and easily disconnected from the motor in case of wear or a fault.

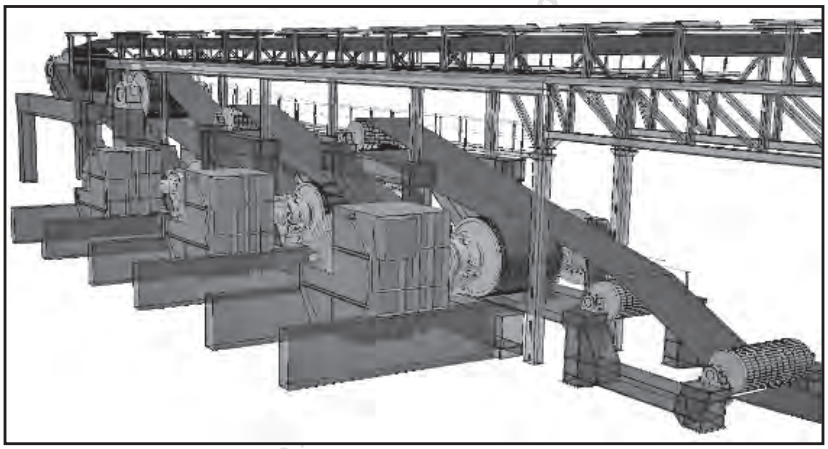

Figure 16.50
Main drive station with gearless drives and disc brakes on opposite side

The efficiency curve of a gearless synchronous motor (SM) differs from that of a squirrel cage induction motor (SCIM) or wound rotor induction motor (WRIM) in several respects, as shown in Figure 16.51:

- The higher the power of an SM, the higher the efficiency
- In part load (down to approximately 45% load), the efficiency curve of the SM increases. While the efficiency of the geared SCIM is lower in general, it drops significantly at around 60% load.

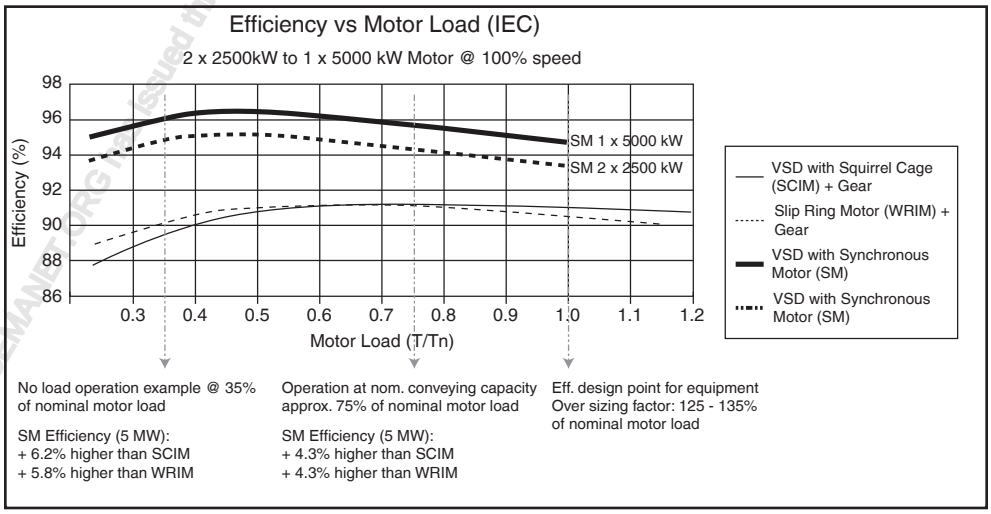

Figure 16.51
Example of efficiency curves at different loads for geared SCIM, WRIM and gearless SM

Frequency Converters For Gearless Conveyor Drives

There are several possible drive solutions for gearless synchronous motors. The most suitable solution for gearless drive applications are network friendly VSIs in a single or multi-drive configuration. VSI drives operate the motors smoothly and accurately during start-up and also at the required low frequency of 5 – 8 Hz with a high power factor within the speed and load range.

Single drives are used if there is only one motor to be operated at the head or tail end of the conveyor belt. They are available for 1 to 4 quadrant operation with diode or active front end low harmonic supply sections. Multi-drives are highly modular solutions. The same supply sections as for single drives are available to feed the common DC bus. Redundant systems might have two parallel supply sections. Depending on the conveyor configuration, several inverter sections can be connected to the common DC bus to control individual motors. If there are conveyors in series, the motors at the head end of one conveyor and the tail end of the next conveyor can be connected to the same multi-drive.

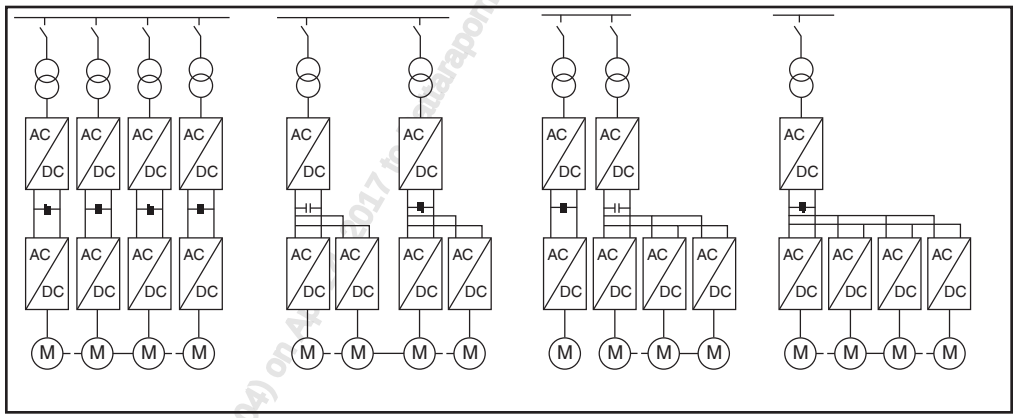

Figure 16.52
Several combinations of drives and inverters are possible

Gearless Conveyor Drives Conclusion

The benefits of a conveyor drive system with a gearless and bearingless synchronous motor are numerous:

- Compact footprint and simple design
- Higher efficiency than with an induction motor (no slip losses)
- No gear reducer losses
- Significantly fewer components
- Drive train free of oscillation
- Virtually maintenance free
- No cooling, monitoring and supervision of the gear reducer and oil coolers/heaters
- No back lash during oscillations and at load reversals
- Faster installation and commissioning
- Higher system reliability and availability

WWW.CEMANET.COM: This is a secure document (146614) on Apr 11 2017 by Chaiyaporn Chaiyapon Siriburg., , Thailand

IN PIT CRUSHING

Most people associate materials handling in mining with handling the mineral in question e.g. iron ore, coal etc. However in open cast mining the majority of material handled and moved is overburden by a substantial factor. In the lignite mines overburden removal has been done by continuous mining systems for about 100 years, driven by large quantities of overburden with stripping ratios of overburden to ore of five, six and more. Combined with the relatively easy digging conditions in most lignite mines, the efficient continuous overburden removal with overland conveyors fed by bucket wheels or bucket chain excavators, either across or around the pit, is the way to go.

In hard rock mines, however, people were reluctant to put additional effort into size reductions of overburden preparing it for belt transport. So in many mines transport by truck was and still is standard procedure. With the very substantial increase in fuel and tire prices the operating costs have increased to a point where the conveyor transport has become economically attractive in many applications. This trend is supported by the ever increasing capacity of these systems. Recently some system providers have begun to propose and install systems that are designed around a fully mobile crushing station, thereby completely eliminating the need for trucks since the crushing station can follow the rope shovel.

In a typical installation the mobile crusher feeds the material via a loading hopper onto a face conveyor from where it is transported via connecting conveyors to a shiftable dump conveyor where a crawler mounted tripper car and a spreader build the waste dump. In such an installation only the crusher, tripper car, and spreader move in rather short intervals. The mobile crusher for instance may move several times every hour, even only for a few meters, to match the mobility of the shovel. The conveyors remain stationary for weeks and months.



Figure 16.53
In pit crushing

WWW.CEMANET.ORG

Caption			Page
Figure	1.1	Detergent handled by conveyor	3
Figure	1.2	Baggasse handled by conveyor	3
Figure	1.3	High capacity belt	3
Figure	1.4	Seed corn conveyor	3
Figure	1.5	Open pit lignite mining	4
Figure	1.6	Path of Travel	4
Figure	1.7	Steep angle conveying	5
Figure	1.8	Steep angle conveying pocket belt	5
Figure	1.9	Air supported conveyors being installed	6
Figure	1.10	Steep angle conveyors	6
Figure	1.11	Loading under stockpile	6
Figure	1.12	Discharging onto stockpile	6
Figure	1.13	Telescoping Chute	7
Figure	1.14	Engineered loading spoon	7
Figure	1.15	Sampler on conveyor	7
Figure	1.16	Screening process	7
Figure	1.17	Reliability	8
Figure	1.18	Availability	8
Figure	1.19	Loading and unloading over water	9
Figure	1.20	Enclosed tube conveyor over sensitive lands	9
Figure	2.1	Nomenclature of a typical troughed belt conveyor	17
Figure	2.2	Horizontal conveyor path	18
Figure	2.3	Descending conveyor path	18
Figure	2.4	Ascending conveyor path	18
Figure	2.5	Concave vertical curve conveyor path with gravity takeup	18
Figure	2.6	Convex vertical curve conveyor path	18
Figure	2.7	Tripper or booster drive conveyor path	18
Figure	2.8	Linear conveyor path	19
Figure	2.9	Horizontal curve conveyor path	19
Figure	2.10	Directional carrying capabilities of conveyors	19
Figure	2.11	Transferring conveyor angles	20
Figure	2.12	Cross section conveyor belt profiles	20
Figure	2.13	Pipe conveyors with complex path	21
Figure	2.14	Troughed conveyor complex path	21
Figure	2.15	Stockpile drag style conveyor loader	21
Figure	2.16	Ship loader with telescoping loading spout	21
Figure	2.17	Stringer style structure	24
Figure	2.18	Box truss style structure	24
Figure	2.19	Gallery style structure with bent supports	25
Figure	2.20	Tubular style conveyor galleries	25
Table	2.21	Organizations that publish standards and codes that apply to conveyors	29
Table	2.22	Example code and standards publications	30
Table	2.23	Canadian National Codes that apply to conveyors	31
Table	2.24	Common depth to span truss ratios	33
Table	2.25	Typical ASTM specifications for structural elements	34

www.CEMA.ORG has issued this document (April 24, 2014) to Pattarapol Sritakoon, Sriracha, Thailand

Caption			Page
Figure	2.26	Buildup resistant structure.	35
Table	2.27	Typical walkway and ladder live loads	37
Table	2.28	Minimum recommended clearances and access requirements .	43
Figure	2.29	Views for recommended conveyor access clearances	44
Figure	2.30	End view at tail pulley conveyor access clearances	44
Figure	2.31	Access section through skirt and load zone	45
Figure	2.32	Elevation view of discharge	45
Figure	2.33	End view of discharge	46
Figure	2.34	Elevation section view of tail and load zone.	46
Figure	2.35	Elevation view of belt repair area	46
Figure	2.36	CEMA crossover Type 3	47
Figure	2.37	CEMA crossover Type 4	47
Figure	2.38	Typical crossunder	47
Figure	3.1	ASTM D6128-00 Tester	50
Figure	3.2	Close up of shear cell	50
Table	3.3	Table of flowability	51
Table	3.4	CEMA material classification code system	52
Table	3.5	Excerpt of CEMA Standard 550: Classification and Definitions of Bulk Materials	53
Figure	3.6	Angle of surcharge, Φ_s load on belt and angle of repose, Φ_r, material in a pile	54
Equation	3.7	Vslip-back , minimum belt speed before material slip-back occurs	55
Equation	3.8	Vspill lift off , maximum belt speed before material spill (Lift-off) occurs	55
Figure	3.9	Example Spill/Lift-Off calculation	57
Table	4.1	Belt widths	60
Figure	4.2	Belt width necessary for a given lump size	61
Table	4.3	Recommended belt speed ranges	62
Figure	4.4	Cross sectional area profiles	64
Equation	4.5	A, cross sectional area of bulk material on belt	64
Table	4.6	CEMA standard belt edge distance	65
Figure	4.7	CEMA standard cross sectional area, A, nomenclature	66
Figure	4.8	Skirted bulk material profile nomenclature	66
Figure	4.9	A_f, cross sectional area of 100% full belt nomenclature	67
Figure	4.10	CEMA cross sectional area dimensionless ratio nomenclature	67
Equation	4.11	b_c, Dimensionless ratio for length of center roll of CEMA standard three equal roll troughing idler	68
Equation	4.12	b_{we} , dimensionless ratio of CEMA standard edge distance to belt width	68
Equation	4.13	b_w, Dimensionless ratio of the width of the belt above troughing idler wing roll to belt width	68

www.CEMA.ORG has issued this document ONLY for the use of Mr. Tharapon Sritakon, Suranaree, Thailand

Caption			Page
Equation	4.14	r_{sch}, Dimensionless ratio of the radius of the material top surface to belt width	68
Equation	4.15	A_s, CEMA standard cross sectional area	69
Equation	4.16	w, Dimensionless ratio for maximum width of bulk material with standard cross sectional area A_s	69
Equation	4.17	dm, Dimensionless ratio to belt width for maximum bulk material depth on a belt with CEMA standard cross sectional area, A_s	69
Figure	4.18	Example calculations for CEMA standard cross sectional profile and area	70
Equation	4.19	b_{we}, Unloaded belt edge distance dimensionless ratio	71
Equation	4.20	bwmc, Dimensionless ratio of length of bulk material on belt above wing roller	71
Figure	4.21	Example of calculating non standard belt edge distance from known idler, belt width and cross sectional area, A	72
Table	4.22	CEMA standard skirtboard widths	73
Figure	4.23	Skirted profile cross sectional area, A and dimensionless ratio nomenclature	73
Equation	4.24	W_s, skirtboard width	73
Equation	4.25	Standard skirtboard width vs. center roll effective width check	74
Equation	4.26	d_{ms}, Dimensionless ratio for calculating height of bulk material rubbing on skirtboards	74
Equation	4.27	D_{ms}, Height of bulk material rubbing on the skirtboards	74
Equation	4.28	d_s, Dimensionless ratio for calculating maximum depth of material in the skirted profile	74
Figure	4.29	Example calculation of height of bulk material on skirtboards and depth of material between skirtboards	75
Figure	4.30	A_f, Cross sectional area dimensionless nomenclature for 100% full, edge to edge, belt loading	76
Equation	4.31	r_{schf}, Dimensionless ratio of radius of top of bulk material profile for 100% full, edge to edge, belt loading	76
Equation	4.32	A_f, Cross sectional area of 100 % full, edge to edge, belt loading	76
Equation	4.33	d_f, Dimensionless ratio for maximum depth of bulk material on 100% full, edge to edge, belt loading	76
Equation	4.34	Df, Maximum depth of bulk material on 100% full, edge to edge, belt loading	77
Equation	4.35	b_f, Dimensionless ratio of width of bulk material on 100% full belt	77
Equation	4.36	W_f, Width of bulk material on 100% full belt	77
Figure	4.37	Example calculations for 100% full, edge to edge, belt loading	78
Figure	4.38	Capacity derating example	80
Equation	4.39	Design capacity times capacity design factor	81
Equation	4.40	Equivalent capacity at 100 fpm and 0.5 m/s	81
Table	4.41	CEMA standard cross sectional and capacity: flat belt, inch belt widths	82

www.CEMANET.ORG has issued this document to ABB on May 2, 2011 for limited internal distribution. Standards - Thailand

Caption			Page
Table	4.42	CEMA standard cross sectional and capacity: three equal roll 20° troughing idler, inch belt widths	83
Table	4.43	CEMA standard cross sectional and capacity: three equal roll 35° troughing idler, inch belt widths	84
Table	4.44	CEMA standard cross sectional and capacity: three equal roll 45° troughing idler, inch belt widths	85
Table	4.45	CEMA standard cross sectional and capacity: flat belt, metric belt widths	86
Table	4.46	CEMA standard cross sectional and capacity: three equal roll 20° troughing idler, metric belt widths	87
Table	4.47	CEMA standard cross sectional and capacity: three equal roll 35° troughing idler, metric belt widths	88
Table	4.48	CEMA standard cross sectional and capacity: three equal roll 45° troughing idler, metric belt widths	89
Table	5.1	CEMA Idler Classification System	93
Figure	5.2	Carrying 35° 3 equal roll troughing idler	94
Figure	5.3	Carrying flat belt idler	94
Figure	5.4	Return belt idler	94
Figure	5.5	Carrying 20° 3 equal roll troughing idler	94
Figure	5.6	Carrying 35° offset troughing idler	95
Figure	5.7	Carrying 20° picking idler	95
Figure	5.8	Carrying 35° troughing rubber-cushion impact idler	95
Figure	5.9	Flat-belt rubber-cushion impact idler with fixed shaft	95
Figure	5.10	Carrying 35° troughed belt training idler	96
Figure	5.11	Garland idler configuration	97
Figure	5.12	Garland idler forms and functions	97
Figure	5.13	Rubber disc return idler	98
Figure	5.14	Helical or spiral self-cleaning return idler	98
Figure	5.15	Return training Idler	99
Figure	5.16	Two-roll “Vee” return Idler rigid frame design	99
Figure	5.17	Two-roll suspended “Vee” return idler	99
Table	5.18	Suggested normal spacing of belt idlers (Si)	100
Table	5.19	CEMA idler load rating parameters	102
Figure	5.20	Impact Force from Lump	103
Table	5.21	Impact Force from Stream of Material	103
Equation	5.22	F_l , Impact force from single lump	104
Equation	5.23	F_s , Impact from stream of bulk material	104
Table	5.24	Belt speeds for various idler roll diameters at 500 rpm	104
Equation	5.25	CIL, calculated idler load	106
Equation	5.26	IML, idler misalignment load	107
Figure	5.27	Idler misalignment load nomenclature	107
Table	5.28	W_b ,Estimated average belt weight for multiple and reduced ply belts per unit length	108
Table	5.29	K_1 Lump Adjustment Factor	108
Figure	5.30	K_2 ,Effect of load on predicted bearing L_{10} life (dimensionless)	109

www.CEMA-DSG.org has licensed this document to [illegible] on 2/24/2014 for interapro. [illegible] Prohibited.

Caption			Page
Figure	5.31	K_{3A}, Effect of belt speed on predicted bearing L_{10} life (dimensionless)	109
Figure	5.32	K_{3B}, Effect of roll diameter on predicted bearing L_{10} life based on same belt speed (Dimensionless)	110
Figure	5.33	Example of roll diameter effect on predicted bearing L_{10} life	110
Figure	5.34	K_{4A}, Effect of maintenance on potential idler L_{10} life (Dimensionless)	111
Figure	5.35	K_{4B}, Effect of environmental conditions on potential idler L_{10} life (Dimensionless)	111
Figure	5.36	K_{4C}, Effect of operating temperature on potential idler L_{10} life (Dimensionless)	111
Table	5.37	CEMA class B idler load ratings	112
Table	5.38	CEMA class C idler load ratings	112
Table	5.39	CEMA class D idler load ratings	113
Table	5.40	CEMA class E idler load ratings	113
Table	5.41	CEMA class F idler load ratings	114
Table	5.42	CEMA picking idler load ratings	114
Table	5.43	CEMA live shaft idler load ratings	115
Figure	5.44	Example Idler Selection: Data	115
Figure	5.45	Example Idler Selection: bulk material weight per unit length	116
Figure	5.46	Example Idler Selection: percent full load check	116
Figure	5.47	Example Idler Selection: Calculated carrying idler load	117
Figure	5.48	Example Idler Selection: Return idler calculated load, CIL_R	118
Figure	5.49	Example Idler Selection: Alternate spacing return idler calculated load, CIL_R	118
Table	5.50	Impact Idler spacing factor, f (Dimensionless)	119
Figure	5.51	Example Idler Selection: Impact Idler calculated force, F, based on spacing and type of impact	119
Equation	5.52	E_i, Impact energy for impact idler selection	120
Figure	5.53	Minimum energy ratings for Impact Idlers	120
Figure	5.54	Example Idler Selection: impact force calculation method for impact idler selection	120
Figure	5.55	Example Idler Selection: Effect of K_2 on predicted troughing idler bearing L_{10} life	120
Figure	5.56	Example Idler Selection: Effect of K_2 on predicted return idler bearing L_{10} life	120
Figure	5.57	Example Idler Selection: Effect of K_{3A} on predicted bearing L_{10} life	121
Figure	5.58	Example Idler Selection: Compare bearing L_{10} life increase, 6-inch Vs. 5-inch diameter rolls	122
Figure	5.59	Idler Selection Example, K_4 factors effect on predicted bearing life	123
Table	5.60	Average weight of troughing idler rotating parts - steel rolls	125
Table	5.61	Average weight of single roll return idler rotating parts - steel rolls	126

WWW.CEMANET.ORG has issued this document (April 20, 2015) to Conveyor Solutions, Inc.

Caption			Page
Table	5.62	WK^2 Average for three equal roll length troughing idlers - steel rolls	127
Table	5.63	WK^2 Average for single steel roll return idlers	128
Table	6.1	Range of primary variables used to field verify the initial Universal Method during development	134
Figure	6.2	Typical conveying resistances and resulting carrying side belt tension diagram	137
Figure	6.3	Basic Conveyor schematic and carrying side tension diagram illustrating tension terminology	140
Figure	6.4	Directional and coordinate terminology	141
Equation	6.5	T_e Basic Method equation	141
Equation	6.6	T_e, CEMA Historical Method equation	142
Table	6.7	7th edition significant changes in equations from the 6th edition	143
Equation	6.8	ΔT_n, Universal Method equation	143
Equation	6.9	$\Sigma\Delta T$, Components of the Universal Method equation	143
Table	6.10	Modifying Factors for applying conveyor designer weighting for individual tension calculations	145
Table	6.11	Example conveyor flight data	146, 254
Figure	6.12	Universal Method example conveyor flight nomenclature	146, 254
Table	6.13	Universal Method example conveyor variables and final values	147
Equation	6.14	ΔTH_n, Flight tension change due to elevate or lower, $(-H_n)$, the belt and the load	148
Figure	6.15	Example calculation of tension needed to elevate material in flight 5	148
Figure	6.16	Accelerating bulk material to belt speed	149
Figure	6.17	V_0, Velocity of falling bulk material stream	149
Equation	6.18	ΔT_{amn}, Tension needed to accelerate bulk material to receiving belt speed	149
Figure	6.19	Example calculation of tension needed to accelerate bulk material onto receiving belt	150
Figure	6.20	Skirtboard seal drag on conveyor belt	151
Equation	6.21	ΔT_{ssn}, Calculation of skirtboard seal drag	151
Figure	6.22	ΔT_{ss1}, Skirtboard seal example calculation	151
Figure	6.23	ΔT_{isn}, Idler belt line reaction for single roll	152
Figure	6.24	Drag from a single idler roll	153
Equation	6.25	ΔT_{ir}, Drag from a single idler roll	153
Equation	6.26	ΔT_{isn}, Idler seal friction	153
Figure	6.27	K_{iT}, Temperature correction factor curve for CEMA C, D and E idler rolls	154
Figure	6.28	K_{iT}, Temperature correction factor for idler seal resistance	155
Table	6.29	K, Constants for idler seal torsional resistance	155
Figure	6.30	Example of actual independent roll tests for K_{is} for speed dependence	156

www.CEMA.ORG has issued this document (4005) on May 2, 2018 to Chaiyaphum Rubber Group, Thailand

Caption			Page
Figure	6.31	Example of actual K_{is} roll tests for temperature dependence	156
Figure	6.32	ΔT_{is2}, Example idler seal friction calculation	157
Equation	6.33	ΔT_{iWn}, Idler load friction effect	157
Table	6.34	C_{iW}, Idler torsional resistance factor	158
Figure	6.35	Idler load friction example calculation	158
Figure	6.36	Belt cover deformation over carrying idler roll	159
Equation	6.37	ΔT_{bin}, Tension increase from viscoelastic reaction between roller and belt	160
Figure	6.38	Equivalent load distribution from three roll idler cross sectional area	160
Equation	6.39	c_{wd}, load distribution load	160
Equation	6.40	X_{ld}, loading pressure adjustment factor	160
Figure	6.41	Harmonic stress/strain cycle	161
Equation	6.42	K_{biR-S}, K_{biR} as determined by the small sample method	162
Equation	6.43	P_{jn}, rubber bottom cover indentation parameter	162
Equation	6.44	F, Normalized indentation factor	163
Equation	6.45	W_{iw}, Maximum line load at belt center	163
Equation	6.46	P, Rubber strain level adjustment	164
Table	6.47	Constants for Equation 6.44, K_{biR-S} F factor	164
Table	6.48	Constants for Equation 6.34, K_{biR} P factor at several w_{ref} values	165
Figure	6.49	Typical indentation resistances for cover types for small sample method example rubbers	166
Figure	6.50	ΔT_{bi2}, Example small sample method cover indentation loss assumptions for flight 2	167
Figure	6.51	D_m, Example depth of material calculation for ΔT_{bi2}	168
Figure	6.52	ΔT_{bi2}, Example, F calculation	169
Figure	6.53	ΔT_{bi2}, Example, P calculation	170
Figure	6.54	ΔT_{bi2}, Example, P_{j2} calculation and final ΔT_{bi2} small sample method result	171
Figure	6.55	DIN 22123 large sample method test schematic	172
Figure	6.56	Alternate large sample method testing schematic	172
Equation	6.57	K_{biR-L}, Large sample method indentation loss for a single idler set	172
Equation	6.58	K_{biT}, Large sample method friction factor	172
Equation	6.59	w_{RL}, Width related load factor	173
Equation	6.60	c_{hr}, Modification factor for idler diameter and cover thickness	173
Table	6.61	Typical large sample method data for Type I and Type II rubber and K_{biT} results	174
Figure	6.62	Large sample method indentation loss example inputs	175
Figure	6.63	Large sample method indentation loss example calculation	176
Figure	6.64	Typical large sample method curves for Type I and Type II rubbers	177
Figure	6.65	Field measured power demand for a 6.6 km coal conveyor	179

www.CMAT.ORG has issued this document (1 MAY 2012) for information purposes only. Thailand

Caption			Page
Figure	6.66	Idler alignment planes relative to the conveyor and belt center line	180
Equation	6.67	ΔT_{imn}, Idler misalignment force	181
Equation	6.68	C_{im}, Design factor for frictional resistance due to idler misalignment	181
Equation	6.69	a_{im}, Average misalignment of idler axis to belt longitudinal axis	181
Equation	6.70	ΔA_e, Effective total alignment deviation from perpendicular to belt travel	181
Table	6.71	C_{bi}, Idler and belt friction factors for misalignment calculations	182
Figure	6.72	ΔA_{ei}, Expected installation deviation values per idler from XZ plane	182
Equation	6.73	ΔA_{ei}, Combined linear and angular misalignment suggested default	182
Figure	6.74	Triangulation method for aligning idlers	183
Figure	6.75	A_{ei}, From triangulation measurements	183
Figure	6.76	ΔA_{ei}, Idler misalignment perpendicular to belt travel plane, XZ	184
Figure	6.77	ΔA_{em}, Individual wing roll angular misalignment from plane YZ due to manufacturing tolerances	184
Equation	6.78	ΔA_{et} Effective misalignment due to idler tilt for fixed frame idlers	184
Figure	6.79	ΔA_{et}, Idler misalignment tilted, a_{it}, from plane XZ in direction of belt travel	185
Equation	6.80	A_{wc}, Load cross sectional area above wing rolls	185
Figure	6.81	ΔT_{im2}, Example idler misalignment calculation	186
Equation	6.82	ΔT_{gmn}, Misalignment resistance from garland idlers	186
Equation	6.83	ΔT_{sbn}, Slider bed resistance	187
Table	6.84	C_{sb}, Slider bed sliding friction coefficients	187
Equation	6.85	ΔT_{sn}, Tension due to material sliding against skirtboard pairs	187
Equation	6.86	D_{ms}, Contact depth of material on skirtboards	188
Figure	6.87	Depth of material on skirtboard	188
Table	6.88	Skirtboard friction factors against smooth steel skirtboards	189
Figure	6.89	ΔT_{s1}, Example skirtboard friction calculation	190
Figure	6.90	CIL, idler vertical misalignment load example	191
Figure	6.91	Material deformation caused by belt sag	191
Equation	6.92	ΔT_{mzn}, Tension loss in flight n from internal movements in the bulk material	192
Equation	6.93	W_{mzn}, Belt work required to cause material movement from one idler to the next	192
Equation	6.94	Δ_{ysn}, Average catenary belt sag for flight n as % of the idler spacing	192
Equation	6.95	R_{mz}, Correction between actual sag and catenary sag	193
Table	6.96	C_{mz}, Material friction factor (dimensionless)	193
Figure	6.97	Example ΔT_{mz3} calculation of material trampling loss	194

www.CEMAEE.ORG has licensed this document to [illegible] Pattaya, Chonburi, Thailand

Caption			Page
Figure	6.98	Material trajectory when $V > V_c$	195
Equation	6.99	V_{cn}, Critical belt speed to prevent material lift off over idlers	195
Equation	6.100	C_{1in}, Factor	195
Equation	6.101	C_{in} and C_{3n}, Factors for equation 6.61 for fabric belts	196
Equation	6.102	c_{in} and c_{3n}, Factors for equation 6.100 for steel cable belts	196
Figure	6.103	Example calculation of V_{cn}, minimum belt velocity for material lift off	197
Equation	6.104	ΔT_{pn}, Tension added at pulleys from belt flexure and bearing resistance	198
Figure	6.105	Example ΔT_{p21} pulley resistance calculation	199
Equation	6.106	ΔT_{bcn}, Tension added by belt cleaners in flight “n”	199
Figure	6.107	Example ΔT_{bcn}, Tension from belt cleaners	200
Figure	6.108	Example ΔT_{bc17}, Tension added from return belt plow	200
Equation	6.109	ΔT_{dpn}, Estimated discharge plow tension effect	201
Equation	6.110	ΔT_{en}, Active pulley torque conversion to belt tension	201
Equation	6.111	ΔT_{emn}, Allowable tension change for active pulleys	206
Figure	6.112	Basic and active general pulley convention and terminology	207
Equation	6.113	C_{wn}, Pulley wrap factor	207
Table	6.114	Table of common pulley wrap factors	208
Equation	6.115	ΔY_s, Catenary sag equation in belt conveyor terms	208
Equation	6.116	ΔY_{sn} & Δ_{ys}, Belt sag equations	208
Equation	6.117	T_{minn}, Minimum tension required to meet specific sag percentage	209
Table	6.118	Recommended carrying flight belt sag for various full load conditions	210
Equation	6.119	W_{et}, Equivalent weight of all moving conveyor components and load	212
Equation	6.120	M_{et}, Total equivalent mass of moving components and load	212
Equation	6.121	ΔT_a, Accelerating (+) or decelerating (-) force provided to the moving conveyor	212
Equation	6.122	ΔV, Change in belt velocity in time interval, t	212
Equation	6.123	$V_{t,}$ Transient Belt velocity at time t	212
Equation	6.124	t, Conveyor stopping time	213
Equation	6.125	L_d, Drift distance conveyor travels before stopping	214
Equation	6.126	M_d, Material discharged during stopping	214
Equation	6.127	ΔT_a, Tension change available for speed changes	215
Figure	6.128	Elastic solid model	219
Figure	6.129	Elastic solid with Coulomb friction	219
Figure	6.130	Kelvin solid model	219
Figure	6.131	Three parameter solid model	219
Figure	6.132	Model of a complete conveyor system	219
Figure	6.133	Running stress diagram	220
Figure	6.134	Free drift stop diagram	220
Figure	6.135	Free drift stop with gravity takeup diagram	221
Equation	6.136	$V_{w,}$ Transient tension wave front velocity	224
Equation	6.137	W_{ne}, Equivalent pulley weight	228

www.CEMA.org has hosted this document (2001) for Personal Use Only. Reproduction Prohibited. Courtesy of Conveyor Equipment Manufacturers Association, Naples, Florida, USA

Caption			Page
Equation	6.138	ΔT_{em}, Pulley torque	229
Equation	6.139	P_{dn}, Power transfer in a conveyor drive	229
Equation	6.140	W_{fe}, flywheel effective mass	231
Equation	6.141	R, Drive speed reduction ratio	231
Table	6.142	Backstop and brake recommendations	234
Figure	6.143	Common representative configurations for takeup pulleys	235
Equation	6.144	f_e, Transport Efficiency	241
Figure	6.145	Various drive pulley layouts	243
Figure	6.146	Schematic of intermediate booster drive on carry side of conveyor	244
Figure	6.147	Takeup tension for reversing conveyor	248
Equation	6.148	S_{ic}, Critical idler spacing sensitive to belt flap	251
Figure	6.149	Example S_{ic13} belt flap critical idler spacing calculation	251
Table	6.150	Operating requirements for example conveyor	255
Figure	6.151	Example calculation of cross sectional area, A, for Example Conveyor Analysis	256
Table	6.152	Initial and final example Imperial results	261
Figure	6.153	Initial and final example metric results	262
Table	6.154	Belt velocity for two different starting algorithms	263
Table	6.155	Maximum tension when starting using two different starting algorithms	264
Figure	6.156	Drive and brake torques while stopping the belt with only decline flights loaded	265
Figure	6.157	Interaction between drive and brake with a 30 second controlled stop	266
Figure	6.158	Example calculation for power required at the drive pulley	267
Figure	7.1	Cross section of a multi-ply fabric-reinforced belt (cut/slit edge)	272
Table	7.2	Properties of rubber covers	273
Table	7.3	General purpose rubber cover and ply adhesion	274
Table	7.4	ARPM belt classifications for high temperature applications	274
Table	7.5	Suggested minimum carry cover (top cover) thickness for normal conditions: ARPM Grade II	276
Table	7.6	Suggested minimum pulley cover (bottom cover) thickness: ARPM Grade II	276
Table	7.7	Deteriorating conditions for conveyor belt covers.	277
Equation	7.8	F_f Frequency factor	277
Figure	7.9	Example frequency factor calculation	278
Figure	7.10	Protecting steel cords with rubber	280
Table	7.11	Guide for minimum protective rubber “F” in Figure 7.10	280
Table	7.12	Some materials used in belting reinforcement (belt carcass).	281
Figure	7.13	Plain weave	282
Figure	7.14	Broken twill weave	282
Figure	7.15	Basket or Oxford weave	283

WWW.CEMAT.ORG has issued this document on 10/07/2021 11:24:21 AM in PDF format for Rapoo Suchuan, Thailand

Caption			Page
Figure	7.16	Leno weave	283
Figure	7.17	Solid woven fabric cross-section view	283
Figure	7.18	Straight warp fabric	283
Figure	7.19	All-Gum steel cord belt	284
Figure	7.20	Vulcanized fabric belt splice.	285
Figure	7.21	Vulcanized steel-cable belt splice	286
Figure	7.22	Hinged-plate type of mechanical splice.	287
Table	7.23	Recommended take-up travel in percent of center distance for belts installed per manufacturers' instructions	288
Figure	7.24	In-line three roll troughing Idler.	288
Figure	7.25	Troughing idler spacing adjacent to terminal head or tail pulleys	289
Figure	7.26	One third trough transition from last fully troughed idler to head pulley	290
Table	7.27	One third trough recommended minimum transition distance ratios	290
Figure	7.28	Full trough transition from tail pulley to first fully troughed idler	291
Table	7.29	Full trough CEMA recommended minimum transition distance ratios	291
Table	7.30	Estimated maximum impact rating multi-ply or reduced-ply belts	292
Equation	7.31	Equivalent free fall calculation	292
Figure	7.32	Equivalent free fall and location of values H_f and H_r	293
Table	7.33	Approximate lump weight in lbf (kgf)	293
Figure	7.34	Misalignment switch mounted near edge of conveyor belt	296
Figure	7.35	Encoder and proximity sensor speed sensors	297
Figure	7.36	Transmit and receive detector monitor loop integrity	298
Figure	7.37	Magnetic rip Inserts at regular intervals (application dependent)	299
Table	7.38	Recommended pulley face widths, belt path and chute clearances.	301
Table	7.39	Typical ratings for multi-ply conveyor/elevator rubber belting (imperial units)	303
Table	7.40	Typical ratings for multi-ply conveyor/elevator rubber belting (metric unit conversion of Table 7.39)	304
Table	7.41	Typical ratings for reduced ply or higher tension conveyor/elevator rubber belting (imperial units)	305
Table	7.42	Typical ratings for reduced ply or higher tension conveyor/elevator rubber belting (metric unit conversion of Table 7.41)	306
Table	7.43	Typical tension and pulley diameter ratings for heavy duty PVC belting	307
Table	7.44	Typical heavy duty PVC belt thickness and weight	307
Table	7.45	Steel cord belt standard specifications	308
Table	7.46	Steel cord carcass weight and minimum recommended pulley diameters	308
Table	7.47	Steel cord belt approximate cover weights by ARPM Grade	309

WWW.CEMANET.ORG has issued this document (10/12/2015) to [illegible] Thailand

Caption			Page
Figure	8.1	Drum pulley	314
Figure	8.2	Drum pulley in use	314
Figure	8.3	Lagged drum pulley	314
Figure	8.4	Lagged drum pulley in use	314
Figure	8.5	Wing pulley	315
Figure	8.6	Wing pulley in use	315
Table	8.7	Standard pulley diameters and maximum permissible total indicator reading runout for common applications	318
Table	8.8	Standard Pulley permissible diameter variations based on face width	319
Table	8.9	Permissible total indicator reading runout for engineered pulleys for steel cable/high modulus belts	319
Table	8.10	Standard Pulley face widths	319
Figure	8.11	Flanged bushing	321
Figure	8.12	Flanged bushing in use	321
Figure	8.13	Flangeless bushing	321
Figure	8.14	Flangeless bushing in use	321
Figure	8.15	Single taper keyless locking assembly	322
Figure	8.16	Double taper keyless locking assembly	322
Figure	8.17	Herringbone lagging grooves	324
Figure	8.18	Chevron lagging grooves	324
Figure	8.19	Diamond lagging grooves	324
Figure	8.20	Pulley with diamond groove lagging	324
Figure	8.21	Slide on lagging	324
Figure	8.22	Ceramic lagging	324
Figure	8.23	Resultant radial load diagrams	326
Equation	8.24	R, Resultant pulley load for general case	326
Equation	8.25	R, Resultant load for 180 degree wrap drive pulley, horizontal belt	326
Equation	8.26	R, resultant load for 180 degree wrap drive pulley, inclined belt	327
Equation	8.27	R, resultant load for >180 wrap drive pulled, horizontal belt	327
Equation	8.28	R, resultant load for >180 wrap drive pulley, inclined belt	327
Equation	8.29	R, resultant load for tail pulley	327
Equation	8.30	R, resultant load for vertical gravity takeup pulley	327
Equation	8.31	R, resultant load for vertical gravity takeup bend pulley	327
Equation	8.32	R, resultant load for snub pulley	327
Equation	8.33	D, shaft size based on stress	328
Table	8.34	k_f, Fatigue stress concentration factors for typical pulley keyway configurations	328
Table	8.35	Sf* 50% of ultimate tensile strengths for typical pulley shaft materials	328
Table	8.36	S_y, Yield strengths for typical pulley shaft materials	329
Equation	8.37	Shaft deflection equation for a two diameter pulley shaft	330
Equation	8.38	Shaft deflection equation for a single diameter pulley shaft	330
Figure	8.39	Pulley shaft deflection for a dual diameter shaft, reference Equation 8.37	330

www.CEMAstore.org has licensed this document to [illegible] Wed Jan 19 2022 [illegible] Saraburi, Thailand

Caption			Page
Figure	8.40	Pulley shaft deflection for a single diameter shaft, reference Equation 8.38	331
Figure	8.41	Typical conveyor discharge pulley arrangement	331
Figure	8.42	Mounted ball bearing	333
Figure	8.43	Mounted tapered roller bearing	333
Figure	8.44	Mounted spherical roller bearing	333
Figure	8.45	Pillow block with split housing	333
Figure	8.46	Pillow block with solid housing	333
Figure	8.47	Tapped base bearing housing	334
Figure	8.48	3-bolt flange bearing	334
Figure	8.49	4-bolt flange bearing	334
Figure	8.50	Piloted flange bearing	334
Figure	8.51	Takeup bearing	335
Figure	8.52	Set screw attachment method	337
Figure	8.53	Eccentric locking collar attachment method	337
Figure	8.54	Concentric locking collar attachment method	338
Figure	8.55	Tapered sleeve attachment method	339
Figure	8.56	Contact seal with carrier	340
Figure	8.57	Contact seal without carrier	340
Figure	8.58	Labyrinth seal	341
Figure	8.59	Taconite duty seal	341
Figure	8.60	Felt seal	341
Equation	8.61	C, ball and spherical bearing dynamic capacity	342
Equation	8.62	L_{10}, Bearing statistical life in hours	342
Equation	8.63	P, Bearing equivalent load	343
Figure	8.64	Basic pulley components	347
Figure	8.65	Pulley end disc/hub configurations	347
Figure	8.66	Pulley end disc and rim weld configurations	348
Figure	8.67	Spiral wing pulley	350
Figure	8.68	Spiral drum pulley	350
Figure	9.1	Concave vertical curves ...	353
Figure	9.2	Profile of conveyor with concave vertical curve	353
Equation	9.3	r_1 Minimum radius for concave vertical curve	354
Figure	9.4	Tension vs. belt weight for minimum recommended radius of 150 ft (45.8 m)	354
Equation	9.5	r_1 Minimum concave vertical radius based on fabric belt edge stress	355
Equation	9.6	r_{1c}, Minimum radius to prevent buckling of concave vertical curve based on stress in center of belt.	355
Table	9.7	Approximate belt modulus values	355
Equation	9.8	T_{ac}, Acceleration tension in concave vertical curve	356
Equation	9.9	T_a, Accelerating force at any point on the conveyor	356
Equation	9.10	X, Distance for calculating location of point c	357
Figure	9.11	Convex vertical curves	358
Figure	9.12	Profile of a conveyor with convex vertical curve	358

WWW.CEMANET.ORG has licensed this document to [illegible] on 12/09/2011 14:20:39 +07:00 for [illegible] Prakarn Chiralerd, Suchitara, Thailand

Caption			Page
Equation	9.13	r_2, Convex vertical curve minimum radius to prevent edge over-stress in fabric and steel cord belts	358
Equation	9.14	r_{2c}, Convex vertical curve minimum radius to prevent buckling in center of belt	359
Equation	9.15	F_r, Load on idlers in convex vertical curve	359
Equation	9.16	Arc, arc length of convex vertical curve	359
Equation	9.17	S_{ic} , maximum troughing idler spacing in a convex vertical curve	359
Equation	9.18	N, number of equal idler spacings in convex curve	360
Table	9.19	Minimum bend pulley diameter for forming convex vertical curves vs. belt speed	361
Figure	9.20	Horizontal curves following access road	361
Figure	9.21	Horizontal curve in a tunnel	362
Figure	9.22	F_T , horizontal motivating force	363
Equation	9.23	F_T , horizontal curve motivating force	363
Figure	9.24	Horizontal curve under construction	364
Figure	9.25	F_T, motivating force diagram	364
Equation	9.26	F_{TI}, Force on inside wing roller “1”of horizontal curve 3 equal roll troughing idler	364
Equation	9.27	F_{TC}, Force on center roller of horizontal curve 3 equal roll troughing idler	364
Equation	9.28	F_{TO}, Force on outside wing roller “2” of horizontal curve 3 equal roll troughing idler	365
Equation	9.29	F_{TNI}, Normal force on inside wing roller “1” of horizontal curve 3 equal roll troughing idler	365
Equation	9.30	F_{TNC}, Normal force on center roller of horizontal curve 3 equal roll troughing idler	365
Equation	9.31	F_{TNO}, Normal force on outside wing roller “2” of horizontal curve 3 equal roll troughing idler	365
Equation	9.32	F_{TPI} , parallel force on inside wing roller “1” of horizontal curve 3 equal roll troughing idler	365
Equation	9.33	F_{TPC} , parallel force on center roller of horizontal curve 3 equal roll troughing idler	365
Equation	9.34	F_{TPO} , parallel force on outside wing roller “2” of horizontal curve 3 equal roll troughing idler	365
Equation	9.35	F_{TP} , total motivating force or total parallel radial force of horizontal curve 3 equal roll troughing idler	366
Equation	9.36	F_{WB} , normal force of belt on of horizontal curve 3 equal roll troughing idler	366
Equation	9.37	Horizontal curve nomenclature for 3 equal roll troughing idler	366
Equation	9.38	F_{WM}, Normal force from the weight of the bulk material for horizontal curve 3 equal roll troughing idler	366
Equation	9.39	F_R, Total normal component of restoring force of horizontal curve 3 equal roll troughing idler	367
Figure	9.40	Straight conveyor to horizontal curve transfer	367
Figure	9.41	Restraining guide roller	368
Figure	9.42	Declined horizontal curve	369

WWW.CEMANET.ORG has licensed this document to (Unauthorized) Property of Copyright Material - Thomson

Caption			Page
Equation	10.1	$A_{t\text{-}red}$ molded cleat belt cross sectional area reduction method 1	375
Table	10.2	k, Cross sectional area reduction constant for molded cleat belts	375
Figure	10.3	Example of molded shallow multi-chevron cleated belt	376
Figure	10.4	Example of molded cleat deep “U”-shaped cleated belt	376
Table	10.5	Guide to maximum allowable angles of inclination with molded cleat belts	380
Figure	10.6	Typical pocket belt for incline elevating	381
Figure	10.7	Typical pocket belt for vertical elevating	381
Figure	10.8	Pocket belt located in the bow of a self-unloading ship	381
Figure	10.9	Deflection wheel cross section	382
Figure	10.10	Typical return support for pocket belt	383
Figure	10.11	Beater bar belt cleaner for pocket belt	383
Figure	10.12	Corrugated sidewalls	384
Figure	10.13	Range of cleat sizes and styles	384
Figure	10.14	Surcharge as material is elevated vertically	385
Figure	10.15	Lumps being elevated vertically	385
Figure	10.16	Pocket belt twisted 90 degrees about its vertical axis	385
Figure	10.17	Typical inner pocket belt system	386
Figure	10.18	Typical “S”-shaped pocket belt system	386
Figure	10.19	Head station of an “S”-shaped pocket belt system	386
Figure	10.20	Drive and belt cleaner	387
Figure	10.21	Vertical zone in access shaft	387
Figure	10.22	High lift capacity pocket belt	387
Figure	10.23	Pocket side view	387
Figure	10.24	Typical flexible cleat and pocket arrangement	388
Table	10.25	Approximate capacities of flexible cleat belts	389
Table	10.26	K, Capacity reduction for troughed belt with flexible cleats	390
Figure	10.27	In-line hexagonal arrangement of idlers	391
Figure	10.28	Offset hexagonal arrangement of idlers	391
Figure	10.29	Simplified illustration of a pipe/tube conveyor system	392
Figure	10.30	Typical fabric pipe/tube conveyor belt construction	393
Figure	10.31	Typical steel cord pipe/tube conveyor construction	394
Table	10.32	A guide to pipe/tube conveyor capacities	395
Table	10.33	A guide to maximum lump sizes for pipe/tube conveyors	397
Figure	10.34	Transition zone length	398
Figure	10.35	Typical Pipe/Tube conveyor transition zone	398
Figure	10.36	Typical Pipe/Tube conveyor transition zone	398
Figure	10.37	Pipe/Tube conveyor head end transition and material discharge	398
Figure	10.38	Pipe/Tube conveyor tail end return side transition support	398
Table	10.39	A guide to required curve radii and transition zone lengths	399
Figure	10.40	Pipe/Tube conveyor curve radii terminology	399
Figure	10.41	Pipe/Tube conveyor traversing difficult terrain	400
Figure	10.42	Pipe/Tube conveyor negotiating a congested plant area	400
Table	10.43	A guide to panel spacing for Pipe/Tube conveyors	401
Figure	10.44	Misaligned Pipe/Tube conveyor	402

www.CEMA.ORG has ieal for this document (CEMA) and is supplied for personal use only, unless otherwise licensed

Caption			Page
Figure	10.45	Manual training idler	402
Figure	10.46	Typical fold belt system cross-section	404
Figure	10.47	Typical fold belt arrangement for steep angle conveying	404
Table	10.48	Fold belt U configuration capacity	405
Figure	10.49	Relative fold belt capacity	406
Table	10.50	Typical fold belt capacities and lump size limitations	406
Figure	10.51	Comparison of fold belt vs. standard troughed belt capacities	407
Figure	10.52	Typical fold belt discharge/drive	408
Figure	10.53	Typical Fold Belt loading zone	408
Figure	10.54	Typical Fold Belt loading zone longitudinal view	408
Figure	10.55	Typical Fold Belt pulley transition	409
Figure	10.56	Typical fold belt intermediate load area transition	409
Figure	10.57	Fold belt negotiating difficult terrain	409
Figure	10.58	Overland fold belt traversing environmentally sensitive area	409
Figure	10.59	Cross-section of one model of suspended type belt conveyor	410
Figure	10.60	Vertical suspended belt arrangement	411
Figure	10.61	Horizontal suspended belt arrangement	411
Figure	10.62	Horizontal suspended belt traversing restricted quarters	411
Figure	10.63	Typical suspended belt deflection wheels	412
Figure	10.64	Tight suspended belt inclined “S” curve	412
Figure	10.65	Typical suspended belt drive station 90° bend	412
Figure	10.66	Typical suspended belt loading zone	412
Figure	10.67	Suspended belt tripper discharge	413
Figure	10.68	Suspended belt typical discharge	413
Table	10.69	Approximate capacity of suspended belts	414
Figure	10.70	In-plant suspended belt application	
Figure	10.71	Suspended belt overland application	415
Figure	10.72	Typical sandwich belt cross section	416
Figure	10.73	Sandwich belt mechanics nomenclature	417
Equation	10.74	N, Sandwich belt normal load	417
Figure	10.75	Sandwich belt suing the belt’s transverse rigidity	418
Figure	10.76	Multi “S” sandwich belt	419
Figure	10.77	Illustration of multi Sandwich Belt in Figure 10.73	419
Equation	10.78	P_r, Radial load on sandwich belt curve	419
Figure	10.79	Illustration of a pressure roll type sandwich belt cross section	420
Equation	10.80	T_{edge}, Sandwich belt edge tension	420
Equation	10.81	T_{ctr}, Sandwich belt center tension	421
Table	10.82	T_{ctr} & T_{egde}, Minimum and maximum curve tension limits for Sandwich Belts	421
Figure	10.83	Mouth of a sandwich belt	422
Figure	10.84	Available sandwich belt profiles	424
Figure	10.85	C-profile sandwich belt feeding a bin	424
Figure	10.86	C-profile sandwich belt on a self unloading ship	424
Figure	10.87	L-profile sandwich belt filling a silo	425

www.CEMAnet.org has licensed this document to Purdue University - Thank you!

Caption			Page
Figure	10.88	L-profile sandwich belt Illustration	425
Figure	10.89	Mobile maintenance platform on a multi-"S" profile sandwich belt	426
Figure	10.90	Totally enclosed light duty extended "S" profile sandwich belt	426
Figure	10.91	Mobile sandwich belt conveyor at ship loading facility	427
Figure	10.92	Sandwich belt used in an open pit mining application	427
Figure	11.1	Accumulated carryback under conveyor	432
Table	11.2	Belt characteristics used in determining belt cleaner application rating	436
Table	11.3	Bulk material characteristics used in determining belt cleaner application rating	436
Table	11.4	Belt cleaning application severity ranking	436
Table	11.5	Carryback levels	437
Equation	11.6	Carryback in tons per hour	437
Figure	11.7	Example belt cleaner carryback calculation	438
Figure	11.8	Cupped belt	439
Figure	11.9	Live shaft roller belt cleaner support	439
Table	11.10	Minimum blade coverage for conveyor belt cleaners	440
Figure	11.11	Recessed mechanical splice	441
Figure	11.12	Diagonal mechanical splice	441
Figure	11.13	Multiple belt cleaners	442
Figure	11.14	Multiple belt cleaners in a system	442
Figure	11.15	Belt cleaning blade angles	442
Figure	11.16	Positive rake	443
Figure	11.17	Zero rake	443
Figure	11.18	Negative rake	443
Figure	11.19	Belt cleaner secondary location	443
Figure	11.20	Belt cleaner in a secondary location	443
Figure	11.21	Rotary belt cleaner	445
Figure	11.22	Rotary belt cleaner in use	445
Figure	11.23	Brush style cleaner	446
Figure	11.24	Finger style cleaner	446
Figure	11.25	Pneumatic belt cleaner	446
Figure	11.26	Pneumatic belt cleaner in use	446
Figure	11.27	Belt water spray system	447
Figure	11.28	Belt water spray in use	447
Figure	11.29	Belt wash box	447
Figure	11.30	Belt washing system in use	447
Figure	11.31	Water treatment concept	448
Figure	11.32	Simple water treatment system in use	448
Figure	11.33	Scavenger conveyor	449
Figure	11.34	Vibrating dribble chute	449
Figure	11.35	V-Plow return belt scraper	450
Figure	11.36	Return V-Plow in use	450
Figure	11.37	Diagonal plow return belt scraper	451
Figure	11.38	Diagonal plow in use	451

www.CEMA.ORG has licensed this document to Rattapon Chitaree, Suanluang, Thailand

Caption			Page
Figure	11.39	Access door	452
Figure	11.40	Access door on chute	452
Figure	11.41	Backstop	453
Figure	11.42	Backstop on conveyor	453
Figure	11.43	Belt stop	454
Figure	11.44	Belt stop actuated	454
Table	11.45	Impact bed/cradle duty rating	454
Equation	11.46	IE, Impact bed/cradle impact energy	455
Equation	11.47	W_e equivalent weight from homogenous stream impact	455
Figure	11.48	Example impact bed/cradle rating	456
Figure	11.49	Slider bed	456
Figure	11.50	Slider bed in use	456
Figure	11.51	Training idler	459
Figure	11.52	Return run training idler in use	459
Figure	11.53	Carry run training idler	459
Figure	11.54	Training idler tied off	459
Figure	11.55	Belt turnover system	459
Figure	11.56	Belt turnover	459
Figure	11.57	Snub pulley cleaner	461
Figure	11.58	Snub pulley cleaner in use	461
Figure	11.59	Spiral wrapped Wing-Type Pulley	462
Figure	11.60	Spiral wrapped Wing-Type Pulley in use	462
Figure	11.61	Flat decking	463
Figure	11.62	Inclined decking	463
Figure	11.63	Rounded decking	463
Figure	11.64	Full covers	465
Figure	11.65	Windbreaks on idlers	465
Figure	11.66	Wind hoops	465
Figure	11.67	Suspended magnet	467
Figure	11.68	Cross belt magnet	467
Figure	11.69	Tramp metal detector	468
Figure	11.70	Metal detector in use	468
Figure	11.71	Load cell belt scale	469
Figure	11.72	Load cell belt scale in use	469
Figure	11.73	Sweep style sampler	470
Figure	11.74	Sweep style sampler in use	470
Figure	11.75	Cross cut sampling system	471
Figure	11.76	Cross cut sample illustration	471
Figure	11.77	Pull Cord Switch	473
Figure	11.78	Belt Misalignment Switch	474
Table	11.79	Coefficients of friction for typical accessory materials	476
Figure	11.80	Scheduled maintenance vs. accessory performance	477
Figure	12.1	Complicated transfer with split load capability	484
Figure	12.2	Complex dual conveyor transfer with by-pass circuits	484
Equation	12.3	α, Chute or hopper valley angle to horizontal	487
Figure	12.4	Spoon loading	488
Figure	12.5	Impact saddles in load zone	490

www.CEMA.ORG has issued this document (2009) for Personal Use Only - Rajabhat Chiangmai University, Thailand

Caption			Page
Figure	12.6	Grizzly loading chute	491
Figure	12.7	Notched loading chute for centering the load	491
Figure	12.8	Speed-up feed conveyor	491
Figure	12.9	Stone or rock box load chute modeled with DEM	492
Figure	12.10	Fugitive material due to transfer point spillage	493
Figure	12.11	Fugitive carryback material under belt return	493
Figure	12.12	Conventional transfer point rebuilt to control fugitive material	493
Table	12.13	Particle size table	494
Figure	12.14	Loading performance can be achieved with a well designed chute	496
Figure	12.15	Transfer points designed to control dust and spillage	496
Figure	12.16	Belt training idler	497
Figure	12.17	Dust control for transfer points with modular air cleaner	497
Figure	12.18	Flexible sealing between transfer chute components	497
Equation	12.19	Q_{dis}, Displaced air in transfer point	498
Equation	12.20	Q_{ind}, Induced air in transfer point	498
Figure	12.21	Dust emissions	499
Figure	12.22	Dust suppression sprays	500
Table	12.23	Typical water addition rates for dust suppression	501
Figure	12.24	Effect of excess water addition for suppression	501
Table	12.25	Typical thermal penalties for dust suppression of coal	501
Figure	12.26	Slipstream effect on dust particles	502
Figure	12.27	Fog nozzles surrounding discharge	503
Figure	12.28	Portable fog generator	503
Figure	12.29	Single fluid atomization	504
Figure	12.30	Nozzle arrangement for dust suppression and dust sock for air relief	504
Figure	12.31	Typical crushing plant dust suppression applications	504
Figure	12.32	Two fluid atomization nozzles	505
Figure	12.33	Two fluid atomization layout	505
Figure	12.34	Typical foam system	506
Figure	12.35	Use of foam on a conveyor transfer point	506
Table	12.36	Typical filtration velocities	507
Table	12.37	Filter media alternatives	508
Table	12.38	Industrial Ventilation / suggested exhaust volumes for transfer points	508
Figure	12.39	Example calculation for filter media area	509
Figure	12.40	Individual transfer point filter	509
Figure	12.41	Passive containment and controlled flow transfer points	510
Equation	12.42	V_b, bulk material transfer velocity	511
Figure	12.43	Example, vertical material velocity needed to match horizontal velocity to belt speed	511
Figure	12.44	Transfer interface angle	512
Equation	12.45	L_a, length required to accelerate bulk material to receiving belt	513
Figure	12.46	Suggested open top skirtboard height	514
Table	12.47	aa, minimum uncovered skirtboard height for 20° three equal roll troughing idlers	515

www.CEMA.ORG has licensed this document to Purdue University Engineering Technical

Caption			Page
Table	12.48	aa, minimum uncovered skirtboard height for 35° and 45° three equal roll troughing idlers	516
Figure	12.49	Multiple loading points	517
Figure	12.50	Simple adjustable skirtboard and sealing system	518
Table	12.51	Characteristics of wear liners	519
Figure	12.52	Discharge over the end pulley	524
Figure	12.53	Spiral lowering chute	524
Figure	12.54	Bin lowering chute	525
Figure	12.55	One form of a rock-ladder lowering chute	525
Figure	12.56	Telescopic discharge chute	526
Figure	12.57	Vibrating feeder	527
Table	12.58	Typical drum feeder capacities	528
Figure	12.59	Angle of repose rotary drum feeder	529
Figure	12.60	Regulating gate belt feeder with picking idlers	530
Figure	12.61	Mass flow feeder with flat live shaft idlers	530
Table	12.62	Bulk material characteristics generally considered suitable for belt feeders	531
Table	12.63	Belt feeder typical design limits	532
Table	12.64	Minimum material tests required for belt feeder design	532
Figure	12.65	Flat belt CEMA Standard cross sectional area	534
Figure	12.66	Flat belt feeder outlet dimensions	534
Figure	12.67	Troughed belt CEMA Standard cross sectional area	535
Figure	12.68	Toughed belt outlet dimensions	535
Figure	12.69	Feeder tapered feed skirt design	535
Figure	12.70	Typical dedicated hopper feeder design	536
Figure	12.71	Adjustable feeder discharge gate	536
Equation	12.72	F_Q, Force to shear the bulk material as it exits feeder hopper	537
Figure	12.73	Simple belt feeder	538
Figure	12.74	Simple belt feeder pressure volumes	538
Equation	12.75	V_{fs}, Consolidated pressure volume	538
Equation	12.76	Q_i, Load on feeder belt	538
Equation	12.77	T_{Qi}, Belt tension required to shear bulk material in feeder hopper	539
Equation	12.78	P_v, Hydrostatic pressure on skirtboards	539
Equation	12.79	T_s, Tension added to belt from skirtboard resistance in the feeder hopper	539
Equation	12.80	$\Delta T_{e\text{-}feeder}$, Total tension for a belt feeder	540
Figure	12.81	Example feeder calculations	541
Figure	12.82	Typical tripper with “Batwing” chutes	543
Figure	12.83	Tripper with stacker belt	543
Figure	12.84	Discharge Plow	544
Figure	12.85	Discharge profile transitioned from troughed belt to flat with 1/2 standard edge distance	547
Figure	12.86	Discharge profile for flat belt, no transition and with standard edge distance	547
Equation	12.87	a_1, Approximate center of gravity of discharge profile	547
Table	12.88	a_1 and h_1, at discharge pulley for 20° troughing carrying idlers	548

www.CEMA.ORG has issued this document to [illegible] on 07/22/2021. Copyright Conveyor Equipment Manufacturers Association, Standard

Caption			Page
Table	12.89	a_1 and h_1, at discharge pulley for 35° troughing carrying idlers	549
Table	12.90	a_1 and h_1, at discharge pulley for 45° troughing carrying idlers	550
Table	12.91	a_1 and h_1, at discharge pulley for flat idlers	551
Equation	12.92	Centrifugal force	552
Equation	12.93	Relationship used to determine trajectory starting point, e_t	552
Figure	12.94	Test used to determine the tangential velocity, Vs, used for plotting the trajectory	552
Figure	12.95	Discharge trajectory nomenclature	552
Equation	12.96	Discharge trajectory test for case 1	553
Figure	12.97	Discharge trajectory case 1	553
Equation	12.98	Discharge trajectory test for case 2	554
Figure	12.99	Discharge trajectory case 2	554
Equation	12.100	Discharge trajectory test for case 3	555
Figure	12.101	Discharge trajectory case 3	555
Equation	12.102	Discharge trajectory test for case 4	556
Figure	12.103	Discharge trajectory case 4	556
Equation	12.104	Discharge trajectory test for case 5	557
Figure	12.105	Discharge trajectory case 5	557
Equation	12.106	Discharge trajectory test for case 6	558
Figure	12.107	Discharge trajectory case 6	558
Equation	12.108	Discharge trajectory test for case 7	559
Figure	12.109	Discharge trajectory case 7	559
Figure	12.110	Trajectory plotting nomenclature	560
Equation	12.111	r_s, Radius from pulley center to load cross section center of gravity	560
Equation	12.112	V_s, Tangential velocity of the center of gravity of the load profile	560
Equation	12.113	Determining the angular relationship for tangent of material discharge from the belt	561
Table	12.114	Time, distance and velocity for discharge trajectories	561
Figure	12.115	Trajectory case 1 example	564
Figure	12.116	Trajectory case 2 example	566
Figure	12.117	Trajectory case 3 example	568
Figure	12.118	Trajectory case 4 example	570
Figure	12.119	Trajectory case 5 example	572
Figure	12.120	Trajectory case 6 example	574
Figure	12.121	Trajectory case 7 example	576
Figure	13.1	Typical AC motor torque vs. speed curve	584
Figure	13.2	Induction motor motoring and regeneration	587
Figure	13.3	AC induction motor with direct coupling	589
Equation	13.4	$Time_{accel}$, Motor acceleration time	589
Figure	13.5	AC motor with full voltage starting and direct coupling	590
Figure	13.6	SC motor with reduced voltage starting and direct coupling	591

www.CEMAT.ORG has leased this document to [illegible] Pattaya, Chonburi), Thailand

Caption			Page
Figure	13.7	Wound rotor induction motor with a stepper secondary control and direct coupling	593
Figure	13.8	Binary stack for secondary for WIRM Control	593
Figure	13.9	DC shunt motor speed vs. voltage	594
Figure	13.10	DC shunt motor torque vs. speed	595
Figure	13.11	DC shunt motor with SCR armature control and direct coupling	595
Equation	13.12.	$rpm_{ac\text{-}motor}$, AC motor speed	597
Figure	13.13	Variable frequency AC motor and direct coupling	597
Figure	13.14	Cross sectional view of a typical motorized pulley assembly	599
Figure	13.15	Motorized conveyor pulley drive	599
Figure	13.16	AC motor with fixed fill fluid coupling	600
Figure	13.17	AC motor with variable fill hydrokinetic coupling	602
Figure	13.18	AC induction motor and mechanical transmission with integral hydroviscous coupling	604
Figure	13.19	AC motor and variable mechanical transmission coupling	605
Table	13.20	Typical service factors for speed reducers in conveyor applications	607
Figure	13.21	Gear motor drive	608
Figure	13.22	Gear motor and chain drive	608
Figure	13.23	Parallel-shaft reducer and direct coupled motor drive	609
Figure	13.24	Parallel shaft reducer with chain drive	609
Figure	13.25	Spiral-bevel helical speed reducer drive directly coupled to motor	609
Figure	13.26	Spiral-bevel helical or, worm-gear, speed reducer with chain drive	610
Figure	13.27	Drive-shaft-mounted speed reducer with V-belt drive	610
Figure	13.28	Shaft mounted bevel helical speed reducer directly coupled to motor	611
Figure	13.29	Two motor/dual-pulley drive	611
Figure	13.30	Motorized conveyor pulley	611
Table	13.31	Mechanical efficiencies of various speed reduction mechanisms	613
Figure	13.32	Back stop	614
Figure	13.33	Back stop on conveyor	614
Equation	13.34	T_{bn}, Backstop torque	616
Table	13.35	Service factors for backstops power method	617
Table	13.36	Backstop and brake recommendations	619
Table	14.1	Shift conveyor walk through	635
Table	14.2	Required inspections	636
Table	14.3	Weekly suggested preventative maintenance activities	637
Table	14.4	Monthly suggested preventative maintenance activities	638
Table	14.5	Semi-annual suggested maintenance activities	639
Table	14.6	Annual suggested maintenance activities	639
Table	14.7	Cleaning and housekeeping suggested activities	640

www.CEMAEXPO.ORG has issued this document to [illegible] for one year, subject to [illegible] Thank you!

Caption			Page
Figure	14.8	Automatic lubrication system schematic	641
Figure	14.9	Automatic lubrication	642
Figure	14.10	Automatic lubrication pumping unit	642
Figure	14.11	CEMA BH-1 safety label placement guideline for bulk handling equipment	646
Figure	14.12	CEMA BH-2 safety label placement guideline for bulk handling equipment	647
Figure	14.13	CEMA bulk handling safety poster	648
Table	14.14	Safety standards organization and resources	649
Table	14.15	Examples of relevant safety related conveyor publications	650
Figure	14.16	Potential In-running pinch points on common conveyor arrangements	651
Figure	14.17	Guard opening size gauge concept	651
Figure	14.18	Typical point guard	653
Figure	14.19	Typical area guard	654
Figure	14.20	Guarding by location	654
Figure	14.21	Pinch point	654
Figure	14.22	CEMA warning label CHR930001	655
Figure	14.23	CEMA guard removed warning label	655
Figure	14.24	Return roll guard	656
Figure	14.25	Ease of maintenance access is important	656
Figure	14.26	Conveyor covers can be utilized as guards and are generally proactive in nature	657
Figure	14.27	Emergency stop cord switches are reactive in nature	657
Figure	14.28	Typical head pulley guarding of shaft and backstop	657
Figure	14.29	Typical tail pulley guarding	657
Figure	14.30	Typical bend pulley guards	658
Figure	14.31	Typical counterweight area guarding	658
Figure	14.32	General risk assessment process	660
Figure	14.33	Effectiveness of risk mitigation methods	661
Table	14.34	Severity categories (adapted from MIL-STD 882)	662
Table	14.35	Suggested Mishap Probability Levels (adapted from MIL-STD 882)	663
Table	14.36	Mishap risk assessment matrix results with numerical values (adapted from MIL-STD 882)	663
Table	14.37	Typical hazards and hazardous situations unique to bulk belt conveyor, systems, components and activities	666
Table	14.38	Hazard risk assessment ranking	667
Table	14.39	Management criteria for ALARP risk acceptance	667
Figure	14.40	Conveyor existing layout for risk assessment example	667
Table	14.41	Example risk assessment severity and probability list	668
Table	14.42	Example risk assessment severity and probability ratings.	668
Figure	14.43	Example risk assessment redesign to reduce severity and probability	669
Table	14.44	Belt conveyor common problems or symptoms	671
Table	14.45	Possible causes and probable solutions to common conveyor problems	672

www.CEMA.ORG has issued this document for Patagonia Central de Capitanes Thailand

Caption			Page
Figure	15.1	Manually adjusted screw takeup	676
Table	15.2	Recommended takeup movement as a percentage of belt length	678
Equation	15.3	W_g, Automatic takeup force	679
Figure	15.4	Schematic of automatic vertical gravity takeup	681
Figure	15.5	Vertical automatic gravity takeup on inclined conveyor	681
Equation	15.6	T_{tu}, Vertical takeup tension	682
Figure	15.7	Horizontal automatic gravity takeup carriage	682
Figure	15.8	Winch powered horizontal takeup	683
Figure	15.9	Hydraulic actuated horizontal takeup	683
Equation	15.10	$T_{tu\text{-}max}$, Maximum belt tension at takeup pulley when using wire rope	684
Equation	15.11	$T_{tu\text{-}min}$, Minimum belt tension at takeup pulley when using wire rope	684
Figure	15.12	Horizontal gravity takeup schematic using wire rope	685
Figure	15.13	Example vertical gravity takeup using wire rope	686
Equation	15.14	PE, Potential energy of a counter weight	688
Equation	15.15	R, Reaction forces on energy absorber structure	688
Table	15.16	η, Efficiency of counter weight energy absorbing devices	688
Figure	15.17	Example, takeup safety device	689
Figure	15.18	Takeup safety devices on vertical gravity takeup	689
Figure	16.1	Nomenclature for air supported conveyors	694
Table	16.2	Materials commonly conveyed on air supported conveyors and typical return run choices	694
Figure	16.3	Air supported return	696
Figure	16.4	Idler supported return	696
Figure	16.5	Rectangular enclosure	698
Figure	16.6	V-shaped enclosure	698
Figure	16.7	Circular enclosure	698
Figure	16.8	Bed plate joint	698
Figure	16.9	Transition idlers	699
Figure	16.10	Air supported transition	699
Figure	16.11	Center loading chute	700
Figure	16.12	Chute adjustment	700
Figure	16.13	Engineered chute loading air supported conveyor	700
Figure	16.14	Engineered chute skirtboards	700
Figure	16.15	Replaceable impact cushion	701
Figure	16.16	High pressure plenum using compressed air boost	701
Figure	16.17	Hip roof cover	702
Figure	16.18	Flat cover	702
Figure	16.19	Circular cover	702
Figure	16.20	Air supported conveyor example conveyor	707
Figure	16.21	Air flow resistance losses nomenclature	707
Figure	16.22	Typical fan arrangement	708
Figure	16.23	Air supported conveyor fan pressure example	709
Figure	16.24	Air supported conveyor fan selection example	709
Equation	16.25	Fan motor power equation	710

www.CEMA.ORG has licensed this document to [illegible] on Apr 27 2011 to [illegible] Bangkok, Thailand

Caption			Page
Table	16.26	Input criteria for air supported conveyor dust collection	710
Figure	16.27	W_{cf}, Material cross sectional area on belt example	711
Figure	16.28	A_v, Air volume to be vented, not collected	711
Figure	16.29	P_d, Product volume displacement	711
Figure	16.30	V_d, Suggested volume for dust pick-up	711
Equation	16.31	T_e, Net tension required at drive pulley	712
Figure	16.32	Air supported conveyor example drive motor selection	713
Figure	16.33	DE simulation of flop gate	714
Figure	16.34	DE simulation of velocity on right and wear on left	716
Figure	16.35	A DEM material model in schematic form.	717
Figure	16.36	DE simulated flow of wood pellets using a hood and spoon chute	719
Figure	16.37	Prediction of behavior of an impacting flow steam	720
Figure	16.38	DE simulation using un-calibrated material model	720
Figure	16.39	DE simulation using a calibrated material model	721
Figure	16.40	Flow resistance vs. speed comparing simulation results to lab results	723
Figure	16.41	Calibrated DEM models can help validate designs	724
Figure	16.42	DE simulation of material build-up in a chute	725
Figure	16.43	High impact region identified by DE simulation	725
Figure	16.44	Flow problems identified through DEM simulations	726
Figure	16.45	DE simulation showing material spillage ahead of the receiving conveyor	726
Figure	16.46	Velocity analysis of material loaded onto receiving belt	727
Figure	16.47	DE simulation used to determine mass flow rate exiting a transfer point	727
Figure	16.48	Geared high-speed twin drive with SCIM	730
Figure	16.49	Gearless low-speed single drive with synchronous motor	730
Figure	16.50	Main drive station with gearless drives and disc brakes on opposite side	731
Figure	16.51	Example of efficiency curves at different loads for geared SCIM, WRIM and gearless SM	731
Figure	16.52	Several combinations of drives and inverters are possible	732
Figure	16.53	In pit crushing	733

Table	A.1	Fundamental Imperial units	761
Table	A.2	Fundamental SI units	761
Table	A.3	Unit Conversions used in the 7th edition	762

Equation	C.1	Hp equation	785
Equation	C.2	T_e, CEMA Historical Method formula for calculating the effective tension, T_e	786
Table	C.3	Estimated average belt weight for multiple and reduced ply belts	787
Equation	C.4	K_x, Equation for Values of K_x per unit length	787
Table	C.5	A_i, Frictional resistance factors	788

WWW.CEMANET.ORG has issued this document to [illegible] for Personal Use Only. No Part of this Standard May be Reproduced or Shared.

Caption			Page
Figure	C.6	K_y, Example interpolation	788
Table	C.7	K_y, Values 250 to 800 ft long conveyors	789
Tables	C.8	K_y, Values 1000 to 3000 ft long conveyors	790
Equation	C.9	K_y, Calculation of K_y, for initial value	791
Figure	C.10	Effect of belt tension on resistance of material to flexure over idler rolls	792
Table	C.11	Corrected K_y factors for interpolation	793
Table	C.12	A and B values for Equation C.9	794
Figure	C.13	K_t, Temperature correction factor	795
Figure	D.1	Maximum back to back parallel tolerance	797
Figure	D.2	Maximum lateral offset tolerance	798
Figure	D.3	Conveyor frame and idler alignment	798
Figure	D.4	Idler support structure tolerance	799
Figure	D.5	Pulley and shaft elevation tolerance	800
Figure	D.6	Pulley and shaft squareness tolerance	800
Figure	D.7	Coupling angular alignment	803
Figure	D.8	Coupling parallel alignment	803
Figure	D.9	Coupling axial alignment	804
Figure	D.10	Correcting belt alignment	805
Equation	E.1	A'_i, Method for adjusting for other roll diameters	811
Equation	F.1	K'_{is}, Method for adjusting for other roll diameters	817

WWW.CEMANET.ORG has issued this document (1-604) on Apr 24, 2010 to Chalmers Student, Student org., Chalmers

A

INTRODUCTION

The Engineering Conference of the Conveyor Equipment Manufacturers Association decided to add metric units into the 7th edition of Belt Conveyors for Bulk Materials. It was the Conference's decision that the 7th edition would be prepared in English units with metric equivalents and whenever possible express the fundamental equations in a manner that either metric or imperial units can be used. Appendix A is presented as an abbreviated guide relevant to belt conveyor calculations used in the 7th edition.

UNITS OF FORCE

The basic unit of force in the imperial system is the slug, s. By definition a slug is the force required to accelerate one pound by one foot per second per second. Any expression for force in slugs must have the units of lb-ft/sec^2. Belt tension in imperial units is expressed pounds per inch of width, PIW.

time	second	(sec)
length	foot	(ft)
mass	pound mass	(lbm)
force	pound force	(lbf)
temperature	degree Fahrenheit	(°F)
absolute temperature	degree Rankine	(°R)

Table A.1
Fundamental Imperial units

The basic unit of force in the SI system is the Newton, N. By definition a Newton is the force required to accelerate one kilogram by one meter per second per second. Any expression for force in newtons must have the units of kg-m/sec^2. To calculate belt tension in SI units it is necessary to express all of the component values of tension in Newtons, N, and weight in kilograms, kg, and linear measurements in meters, m.

time	second	(s)
length	meter	(m)
mass	kilogram	(kgm)
force	Newton	(N)
temperature	degree Celsius	(°C)
absolute temperature	degree Kelvin	(°K)

Table A.2
Fundamental SI units

Because for most calculations in the 7th edition the acceleration due to gravity does not come into play and to simplify Imperial calculations the units of force are expressed as, pounds force (lbf) and kilograms force (kgf). If a clear distinction is appropriate between force and mass, the mass units will be expressed as pounds mass (lbm) and kilograms mass (kgm). In cases where necessary or customary Newtons (N) are used for force. Bulk material unit weight is referenced as bulk density throughout this text though the intent in the calculations is usually to use the specific weight. Therefore the symbol γ_m for the weight per

WWW.CEMANET.ORG has issued this document (1460) on Aug 24, 2017 to Paterson School, Suan-Luang, Thailand

unit volume is used rather than the typical symbol ρ for mass per unit volume. The metric abbreviations for hours, h, and seconds, s, is used throughout for both unit systems.

1.0	bar	760	mm (mg)	1.0	mm (mg)	0.001	bar
1.0	cfm	0.028	m^3/min	1.0	m^3/min	35.315	cfm
1.0	cfm	28.317	l^3/min	1.0	l^3/min	0.035	cfm
1.0	fpm	0.00508	m/s	1.0	m/s	196.85	fpm
1.0	ft	0.305	m	1.0	m	3.281	ft
1.0	ft-lbf	0.138	m-kgf	1.0	m-kgf	7.233	ft-lbf
1.0	ft^2	0.0929	m^2	1.0	m^2	10.764	ft^2
1.0	ft^3	0.02832	m^3	1.0	m^3	35.3	ft^3
1.0	ft^3/min	0.0283	m^3/min	1.0	m^3/min	35.3	ft^3/min
1.0	gallon (gal)	3.785	liter (l)	1.0	l	0.264	gal
1.0	gpm	3.79	l/m	1.0	l/m	0.264	gpm
1.0	Hp	0.746	kW	1.0	kW	1.341	Hp
1.0	hr	60	sec	1.0	h	60	s
1.0	in (mg)	0.491	psi	1.0	psi	2.036	in (mg)
1.0	in w.g.	0.249	kPa	1.0	kPa	4.019	in w.g.
1.0	in/ft	3.937	mm/m	1.0	mm/m	1.0×10^{-3}	in/ft
1.0	in^2	6.452	cm^2	1.0	cm^2	0.155	in^2
1.0	in^2	7.72×10^{-4}	yd^2	1.0	mm^2	1×10^{-6}	m^2
1.0	inch (in)	25,400	µm	1.0	µm	3.937×10^{-5}	inch
1.0	lb/ft	1.488	kg/m	1.0	kg/m	0.672	lb/ft
1.0	lb/ft^2	4887	g/m^2	1.0	g/m^2	0.00022	lb/ft^2
1.0	lb/ft^3	16.018	kg/m^3	1.0	kg/m^3	0.062	lb/ft^3
1.0	lbf	4.448	N	1.0	N	0.225	lbf
1.0	lbf	0.454	kgf	1.0	kgf	2.205	lbf
1.0	$lbf\text{-}in^2$	0.000293	$kgf\text{-}m^2$	1.0	$kg\text{-}m^2$	3417.2	$lb\text{-}in^2$
1.0	lbf/ft^2	47.88	N/mm^2	1.0	N/mm^2	4.882	lbf/ft^2
1.0	lbf/in	0.175	N/mm	1.0	N/mm	5.71	lbf/in
1.0	lbf/in	0.0179	kgf/mm	1.0	kgf/mm	5.6	lbf/in
1.0	psi	0.006895	Mpa	1.0	Mpa	145	psi
1.0	ton (t)	0.907	mt	1.0	mt	1.102	ton (t)
1.0	°F	5/9(°F - 32)	°C	1.0	°C	9/5(°C) + 32	°F
1.0	1.0 tph @ 100 fpm @ 100 lbf/ft^3	0.892	mtph @ 0.5 m/s @ 1600 kgf/m^3	1.0	mtph @ 0.5 m/s @ 1600 kgf/m^3	1.129	tph @ 100 fpm @ 100 lb/ft^3
1.0	ft^3/h @ 100 fpm	0.0283	m^3/h @ 1.0 m/s	1.0	m^3/h @ 1.0 m/s	17.93	ft^3/h @100 fpm

www.SERVICE.IR.ORG has issued this document (14504) on May 24, 2017 to Benjapim Shinawatra, Siamlucky, , Thailand

Table A.3
Unit conversions used in the 7th edition

This Appendix provides a reference for terms used primarily in the equations. Nomenclature is presented by Chapters because some terms are used with different meanings or units depending upon the context. If there is a doubt over the description between Appendix B and the Chapter, use the meaning based upon the context of the Chapter. Those Chapters without specific calculations or diagrams requiring explanation of terms are omitted from this Appendix.

Chapter Two

Symbol	Description	Clearance
A	Pulley Replacement	Belt Width + 12 in (Belt Width + 300 mm), 30 in (750 mm) min.
B	Idler Replacement Primary side	Belt Width, 30 in (750 mm) min.
C	Idler Replacement Secondary side	1/2 Belt Width, 24 in (600 mm) min.
D	Clearance Under Conveyor for Cleaning	24 inches (600 mm)
E	Belt Cleaner Service – Removal	Belt Width
F	Belt Cleaner Service – Inspection Height	24 in (600 mm) min. or S + M, O or R
G	Personnel Passage	30 in (750 mm)
H	Skirtboard Replacement Height Access	9 in (230 mm)
I	Skirtboard Adjustment	6 in (150 mm)
J	Personnel Access Opening Height	24 in (600 mm)
K	Personnel Access Opening Width	24 in (600 mm)
L	Overhead Clearance	48 in (1200 mm)
M, N	Primary Belt Cleaner Location	Consult Manufacturer
O, P	Secondary Belt Cleaner Location	Consult Manufacturer
Q, R	Tertiary Belt Cleaner Location	Consult Manufacturer
S I	Inspection Height Above Work Platform	24 in (600 mm)
T, U	Return Belt Cleaner (Plow)	Consult Manufacturer
V	Dribble Chute to Pulley clearance	12 in (300 mm)
W	Belt Repair Area	3 x Belt Width, 10 ft (3 m) min.

WWW.CEMANET.ORG has issued this document (2020) on Jun 24, 2017 to Pattanapon Sritrakool, Suanluang, , , Thailand.

Chapter Three

Symbol	Description
β	Idler wing roll inclination
γ_m	Material bulk density
σ_0	Adhesive stress between bulk material and conveyor belt
Θ_{belt}	Belt inclination angle (deg) [+ = incline - = decline]
Φ_r	Angle of repose of the bulk material
Φ_s	Surcharge angle of the bulk material
ΔY_s	Belt sag between idlers
Δy_s	Sag ratio expressed as a % of the idler spacing
μ_e	Equivalent friction between bulk material and conveyor belt
b_c	Length of belt on center roller in contact with the material
b_w	Length of wing roller in contact with the belt
BW	Belt width
b_{we}	Length of belt edge without bulk material
b_{wmc}	Length of belt on wing roller in contact with the material
g	Acceleration due to gravity
h	Maximum height of the bulk solid on the belt (
S_i	Idler spacing
$V_{slip-max}$	Maximum belt speed before bulk solid slips on an inclined or declined belt
$V_{spill-max}$	Maximum belt speed before bulk solid spills on an inclined or declined belt

WWW.CEMANET.ORG has issued this document (CEMA) on 24-Oct-24, Due to Prabhakar Ekatakool, Suranaree U., , Thailand

Chapter Four

Symbol	Description
a’	A factor used for simplifying the calculation of A_s
A	Total material cross sectional area based on design criteria
A_s	CEMA standard cross section area based on the surcharge angle with circular top surface and CEMA standard edge distance
b’	A factor used for simplifying the calculation of A_s
b_c	Ratio of upper surface of belt above center roll compared to BW, belt width
B_c	Length of upper surface of belt above center roll
b_d	Ratio of the material depth to the belt width
b_w	Ratio of upper surface of belt above wing roll compared to BW, belt width
B_w	Length of upper surface of belt above wing roll
BW	Belt width
b_{we}	Ratio of belt edge above wing roll not in contact with the bulk material compared to BW, belt width
B_{we}	Length of belt edge above wing roll not in contact with the bulk material
b_{wmc}	Ratio of surface of belt with bulk material contact above wing roll compared to BW, belt width
B_{wmc}	Length of surface of belt with bulk material contact above wing roll
β	Troughing angle [degree when used with a trig function, radians otherwise]
c’	A factor used for simplifying the calculation of A_s
d_f	Ratio for maximum depth of bulk material profile on 100% full belt compared to BW, belt width
D_f	Maximum depth of bulk material profile on 100% full belt
d_m	Ratio for maximum depth of bulk material profile compared to BW, belt width
D_m	Maximum depth of bulk material profile
d_{ms}	Ratio for depth of bulk material in contact with skirtboards compared to BW, belt width
D_{ms}	Depth of bulk material in contact with skirtboards
d_s	Ratio for maximum depth of bulk material between skirtboards compared to BW, belt width
D_s	Maximum depth of bulk material between skirtboards
Q	Design capacity in tons per hour
Q_{100}	Capacity at 100 fpm (ft^3/hr)
$Q_{0.5}$	Capacity at 0.5 m/s (m^3/hr)
Q_{DF}	Capacity times a design factor, DF
r_{sch}	Ratio of effective radius of the top surface of the material based on surcharge angle compared to BW, belt width
R_{sch}	Radius of the top surface of the material based on surcharge angle

WWW.CEMANET.ORG has issued this CEMA Standard on Apr 24, 2014 for personal use only. All rights reserved.

r_{schf}	Ratio of effective radius of the top surface of the material on 100% full belt based on surcharge angle compared to BW, belt width
Chapter Four Continued	
R_{schf}	Radius of the top surface of the material on 100% full belt
SF	Capacity design factor for reducing the design capacity for calculations
V	Belt speed
Φ_s	Surcharge angle [degree when used with a trig function, radians otherwise]
w	Ratio for width of bulk material compared to BW, belt width
W	Width of bulk material
W_f	Width of bulk material on 100 % full belt
W_s	Width between skirtboards
γ_m	Bulk density of the material

Chapter Five

Symbol	Description
B4	CEMA Idler Class for 4 inch (102 mm) diameter rollers for belts 18 through 48 (in) (457 through 1219 mm)
B5	CEMA Idler Class for 5 inch (127 mm) diameter rollers for belts 18 through 48 (in) (457 through 1219 mm)
BW	Belt width
C4	CEMA Idler Class for 4 inch (102 mm) diameter rollers for belts 18 through 48 (in) (457 through 1219 mm)
C5	CEMA Idler Class for 5 inch (127 mm) diameter rollers for belts 18 through 48 (in) (457 through 1219 mm)
C6	CEMA Idler Class for 6 inch (154 mm) diameter rollers for belts 24 through 60 (in) (610 through 1524 mm)
CIL	Calculated idler load
CIL_R	Calculated return idler load
d	Idler Misalignment in Z direction
D5	CEMA Idler Class for 5 inch (127 mm) diameter rollers for belts 24 through 72 (in) (610 though 1829 mm)
D6	CEMA Idler Class for 6 inch (154 mm) diameter rollers for belts 24 through 72 (in) (610 though 1829 mm)
E_i	Impact energy
E6	CEMA Idler Class for 6 inch (154 mm) diameter rollers for belts 36 through 96 (in) (914 through 2438 mm)
E7	CEMA Idler Class for 7 inch (179 mm) diameter rollers for belts 36 through 96 (in) (914 through 2438 mm)
f	Idler Spacing Factor
F	Impact force

WWW.CEMANET.ORG | Copyright © 2004 | All rights reserved | 4/4/2017 to Pattarapom Sritakool, Siam Kubota Corporation Co., Ltd., Thailand

F_L	Impact force from a single lump of bulk material
F_S	Impact force from a stream of bulk material
Chapter Five Continued	
F6	CEMA Idler Class for 6 inch (154 mm) diameter rollers for belts 60 through 96 (in) (1524 through 2438 mm)
F7	CEMA Idler Class for 7 inch (179 mm) diameter rollers for belts 60 through 96 (in) (1524 through 2438 mm)
F8	CEMA Idler Class for 8 inch (203 mm) diameter rollers for belts 60 through 96 (in) (1524 through 2438 mm)
F_u	Unit impact force used for selecting idlers
γ_m	Bulk density
H	Drop height
IML	Idler misalignment load
ILR	Idler load rating
k	Spring constant of idler
K_1	Lump adjustment factor
K_2	Effect of load on predicted bearing life
K_{3A}	Effect of belt speed on predicted bearing L_{10} life
K_{3B}	Effect of roll diameter on predicted bearing L_{10} life
K_{4A}	Effect of maintenance on predicted bearing L_{10} life
K_{4B}	Effect of environment on predicted bearing L_{10} life
K_{4C}	Effect of temperature on predicted bearing L_{10} Life
Kl	Lump adjustment Factor
L_{10}	Number of operating hours at 500 rpm that 90 percent of a population of a certain type of bearing at a stated load will attain or exceed before failure
Q	Design capacity of bulk material conveyed
S_i	Idler spacing
$S_{i\text{-impact}}$	Impact Idler spacing
T	Belt Tension
T_1	Belt tension carrying side
T_2	Belt tension return side
Φ_s	Surcharge angle
V	Design belt speed
W	Weight of a lump
W_B	Belt weight per unit length
WH	Weight of lump times the drop height
WK^2	Inertia of rotating parts
W_M	Material weight per unit length

www.CEMANET.ORG has issued this document to Pattarapom Smitarat, Standard, , Thailand

Chapter Six

Symbol	Description
a	Acceleration
A_{em}	Effective misalignment due to manufacturing variation
a_n	Constant coefficient used in rubber characterization equations
A_s	Distance between idler support points in the direction of belt width.
b	Belt related friction losses subscript
B	Wing roll length
b_n	Constant coefficient used in rubber characterization equations
BW	Belt width
β	Idler troughing angle (degrees when used with a trig function otherwise radians)
γ_m	Bulk density of the bulk material
ΔA_e	Effective total deviation from perpendicular to belt travel
ΔA_{ei}	Expected average installation deviation referenced from center roll to perpendicular to belt travel
ΔA_{et}	Effective misalignment due to intentional inclination of idler frame a_{it},
a_{it}	Intentional inclination of idler frame or wing roll to aid in belt tracking
Φ_s	Material surcharge angle (degrees when used with a trig function otherwise radians)
ΔT	Positive (+)ΔT increases tension and negative (-) ΔT reduces tension in the direction of belt motion
ΔT_a	Tension available to cause speed change
ΔT_{bin}	Tension increase from visco-elastic deformation of belt
ΔT_{amn}	Tension added in loading to continuously accelerate material to belt speed (lbf)
ΔT_{bcn}	Tension added due to belt cleaners and plows (lbf)
ΔT_{dpn}	Tension added due to discharge plow (lbf)
ΔT_{ef}	ΔT_{ef} required at the new speed
ΔT_{ei}	Initial ΔT_e before the speed change
$\Sigma\Delta T_{Energy\ n}$	Resistances due to potential and kinetic energy
ΔT_{et}	Temporary or transient active tension provided by the drive
ΔT_{gmn}	Tension loss in flight n from self misalignment of garland idler
ΔT_{Hn}	Change in belt tension to lift or lower the material and belt
ΔT_{imn}	Tension loss from idler misalignment
ΔT_{isn}	Change in tension from idler seal friction
ΔT_{iWn}	Change in tension from idler load friction (lbf)
$\Sigma\Delta T_{Main\ n}$	Main resistances = $\Delta T_{ssn} + \Delta T_{isn} + \Delta T_{iWn} + \Delta T_{bin} + \Delta T_{mn} + \Delta T_{sbn} + \Delta T_{sn} + \Delta T_{mzn}$ for flight n
ΔT_{mzn}	Tension change due to bulk materials moving between the idlers
ΔT_n	Tension change in flight or pulley n

www.CEMANET.com Downloaded from 125.60.0.0 on 01/01/2017 at Chaiyaphum Technical College, Suan Dok, Thailand

Chapter Six Continued	
ΔT_n	Total change in belt tension to cause steady belt speed
ΔT_{ni}	Total tension loss from 'main resistances' in flight 'n' per idler
$\Sigma\Delta T_{Point\ n}$	Point resistances
ΔT_{prn}	Tension change due to pulley bearings
ΔT_{pxn}	Tension change due to belt bending on the pulley
ΔT_{sbn}	Drag due to slider beds
ΔT_{sn}	Tension change due to bulk materials sliding on skirtboards
ΔT_{ssn}	Tension change due to the belt sliding on skirtboard seal
ΔV	Change in belt speed
ΔV_t	Change in belt velocity during time interval t
Δy_{sn}	Average catenary belt sag for flight n as a percentage of the idler spacing (%)
ΔY_{sn}	Vertical drop between idlers for flight n
μ_{bcm}	Sliding friction factor between belt and the cleaner blade
μ_{ss}	Sliding friction coefficient between belt and seal rubber
C	Friction variables for sliding friction between components
c1,	Function in Equation 6.46
c_{1in}	Function in Equation 6.46
C_{bcm}	Frictional resistance from belt movement under cleaner pressure
C_{bi}	Friction factor for sliding between belt cover and idler material
C_{im}	Design factor for frictional resistance due to idler misalignment
C_{iW}	Idler rotating resistance load factor
C_{mg}	Design frictional resistance from garland idler self alignment
C_s	Skirtboard friction factor
C_{sb}	Slider bed sliding friction factor,
C_{ss}	Frictional resistance to the belt movement
C_w	Pulley wrap factor
D_f	Flywheel diameter
d_{ms}	Depth of material sliding on the skirtboard
D_n	Pulley diameter
D_r	Roll diameter
e	Base of Napierian logarithms
E_0	Rubber stiffness property
E_b	Longitudinal belt modulus
a_{im}	Average misalignment of idler axis to belt longitudinal axis
E_l	Belt modulus
E_n	Efficiency or power loss between drive and belt
Θ_i	Angle of impact of material to the belt relative to belt direction

www.BZFANET.ORG has issued this document for educational purposes only (2017-10-26 10:11:00 UTC) Thailand

Chapter Six Continued	
Θ_{in}	Uniform or average angle of incline (+) or decline (-) in direction of movement over the flight length L_n
Θ_n	Belt wrap on pulley n (radians)
F	External loads affecting ΔT_n
f	Coefficient of friction between pulley surface and belt surface
F_{bcm}	Effective normal force between belt and cleaner
f_e	Transport efficiency effective friction factor
F_{ss}	Effective normal force between belt and seal
g	Acceleration of gravity
h_b	Belt cover thickness
H_n	Vertical lift of flight n
i	Idler related friction losses subscripts
i	Index for each individual rotating component including drive components (n for pulleys)
K	Friction variables for internal energy loss
K_{biB}	Viscoelastic characteristic of belt cover rubber
K_f	Radius of gyration of a flat round plate
K_{is}	Seal torsional resistance per roll at 500 rpm
K_{iT}	Temperature correction factor
K_{iV}	Torsional speed effect
K_t	Temperature correction factor
K_x	Idler resistance factor
K_y	Resistance Factor
L	Total conveyor path length, tail to head
L_d	Drift distance
L_m	Total loaded length of the belt
L_n	Length of a particular conveyor segment or flight n
m	Bulk material friction related losses subscripts
m	Number of belt cleaners in flight n
m	Factor in the calculation of Sic with a value of 1 or 2
M_d	Material discharged during stopping (tons)
n	Subscript n refers to one in a series of flights and pulleys
n	Tension subscripts, relate to particular drive or brake pulleys
n_r	Number of rolls per idler set
P_{bn}	Linear power seen by the belt at pulley n
P_{dn}	Minimum rotary power required of a drive component to pulley n
P_{jn}	Cover indentation parameter

WWW.CEMANET.COM Licensed to [illegible] on Apr 2017 to [illegible]

Chapter Six Continued	
Q	Bulk material loading rate or design capacity
R	Speed reduction ratio
R_{mz}	Correction between actual sag and catenary sag
R_{pn}	Radial load of pulley n
R_{rbi}	Modifying factor for belt rubber indentation resistance
R_{rim}	Modifying factor for idler misalignment drag
R_{rp}	Modifying factor for pulley drag
R_{rmz}	Modifying factor for material trampling loss due to belt sag
R_{rsb}	Modifying factor for slider bed friction
R_{rsk}	Modifying factor for skirtboard drag
R_{rss}	Modifying factor for skirt seal drag
R_{rxx}	Modifying factor form where xx refers to various Main Resistances
R_{ris}	Modifying factor for seal torsion resistance
R_{riV}	Modifying factor for range for torsion speed effect
R_{riW}	Modifying factor for idler load friction
SF_d	Safety Margin for active pulley
S_{ic}	Critical idler spacing for belt flap
S_{in}	Spacing of idler sets along flight n
T	Assumed to be, T_x, tension in the direction of belt travel
t	Time interval being analyzed
T_1	Tension on the carry side of the primary drive pulley
$T_{1,n}$	Tension in the belt approaching active pulley n
T_2	Tension on the return side of the primary drive pulley
$T_{2,n}$	Tension on the belt retreating from active pulley n
T_{ac}	Additional tension contributions from accessories
T_{am}	Force to accelerate the material as it is fed onto the belt
t_b	Conveyor belt thickness
T_c	Ambient operating temperature (°C)
T_e	For drive pulleys T_e is used interchangeably with ΔT
T_{en}	Tension change at an active pulley
T_F	Ambient operating temperature (°F)
TIR	Roll or Pulley diametral run out
T_{mn}	Minimum tension in flight n
T_n	Average tension in flight or pulley n
T_p	Tension due to the belt flexure around pulleys and pulley bearing resistance
T_{qn}	The active torque provided to the pulley
T_{tu}	Tension at takeup
T_x	Assumed to be, T, tension in the direction of belt travel

www.CEMANET.ORG has issued this document to [illegible] Thailand, Bangkok, Thailand

Chapter Six Continued	
Φ_s	Material surcharge angle (degrees when used with a trig function otherwise radians)
Φ_r	Material angle of repose (degrees when used with a trig function otherwise radians)
V	Belt speed
V_c	The critical maximum belt speed without causing material lift off
V_o	Initial velocity of material at point of impact with belt
V_t	Transient belt velocity after time t
V_w	Wave front velocity
W	Distributed external vertical loads
W_b	Distributed gravity load of belt along length of belt
W_{bt}	Total weight of the belt
W_f	Weight of flywheel
W_{fe}	Effective translating weight of flywheel
w_i	Load distribution factor
W_i	Swinging weight of idler
W_i	Weight of rotating component i
W_m	Distributed gravity load of bulk material along length of the belt
W_{mt}	Total weight of the bulk material on the belt
W_i	Weight of rotating component i
x	Direction subscript + in direction of belt travel
x	Subscript in ΔT_{pxn} 'f' for fabric carcass belt 's' for steel cable belt construction
y	Direction subscript in the belt width direction referenced from 0 at belt centerline
z	Direction subscript in the belt thickness direction referenced from carrying side

WWW.CEMANET.ORG has issued this document (pdf) to [illegible] on [illegible] 2017 for [illegible] Sirakool, [illegible], [illegible], , , Thailand

Chapter Seven

Symbol	Description
A	Protective covering for cords during the entire belt life
ARPM-HR	APRM high temperature rubber grades: Class 1, Class 2 and Class 3
B	Amount of top cover used for the service life of the belt
C	Amount of bottom cover used for the service life of the belt
D	Diameter of the cord
E	Rubber encapsulating the steel cords
F	Thickness of rubber to protect the cords during service
F_f	Frequency factor
H_e	Equivalent free fall
H_f	Total free fall
H_r	Vertical height on loading chute slope
Θ_i	Angle in degrees that chute slope makes with the horizontal
I	ARPM (RMA) rubber grade
II	ARPM (RMA) rubber grade
kN/m	Minimum tensile strength of the belt per unit width (usually refers to steel cable belts)
L	Terminal pulley center to center distance
PIW	Working strength of the belt per unit width (usually refers to fabric carcass belts)
ST	Abbreviation for tensile strength (kN/m) used to denote steel cable belt ratings
V	Belt Speed

WWW.CEMANET.ORG has issued this document (1/10/2015 5:40:01 PM) for Zin Ko Ko Aung (zinkokoaung@gmail.com, Suan Siam Co., Ltd., Thailand

Chapter Eight

Symbol	Description
	Shaft deflection angle
A	Moment arm for pulley
B	Bearing centers
C	Moment arm for shaft reinforcement
D	Shaft diameter
D	Diameter of shaft at hub
D_2	Diameter of shaft inside pulley
E_y	Young's modulus
F.S.	Factor of safety
Θ_n	Belt tension angle
I	Area moment of inertia of shaft
I_2	Area moment of inertia of shaft inside pulley
k_a	Surface factor
k_b	Size factor
k_c	Reliability factor
k_d	Temperature factor
k_e	Duty cycle factor
k_f	Fatigue stress concentration factor
k_g	Miscellaneous service factor
kN/m	Belt tensile strength (usually used with steel cable belts)
M	Bending moment
PIW	Belt working strength (usually used with fabric carcass belts)
$_n$	Belt tension angle (+ = ccw from 0) (- = cw from 0)
R	Resultant load on pulley
S_f	Corrected shaft fatigue limit
S_f*	0.5 times tabulated ultimate tensile strength
S_y	Yield strength
T	Torsional moment
T_1	Tight side tension
T_2	Slack side tension
T_3	Non-driven pulley tension
T_{ccw}	Tension in counter clockwise direction
T_{cw}	Tension in clockwise direction
TIR	Total indicator runnout tolerance
T_n	Belt tension in curve n

www.GENANET.com Licensed to Mr. Patcharapon Sirakool, Suanlueng, , Thailand
Order No. 4 (4) on Apr 24, 2017

Chapter Eight Continued	
W	Weight of the pulley and shaft

Chapter Nine

Symbol	Description
Arc	Arc length of a convex vertical curve
α	Horizontal curve super elevation angle
β	Idler troughing angle
γ_m	Bulk density of the bulk material
Δ	Change in the angle of the belt between entering and leaving a convex or concave curve
μ_i	The appropriate friction factor between the belt and the corresponding inside idler roll of a horizontal curved belt
μ_c	The appropriate friction factor between the belt and the corresponding center idler roll of a horizontal curved belt
μ_o	The appropriate friction factor between the belt and the corresponding outside idler roll of a horizontal curved belt
b_c	Length of the belt in contact with the belt on the center roller of an idler on a horizontal curve
B_m	Modulus of elasticity of the conveyor belt
BW	Belt width
b_{w1}	Length of the belt in contact with the belt on the inside roller of an idler on a horizontal curve
b_{w2}	Length of the belt in contact with the belt on the outside roller of an idler on a horizontal curve
c	Point where concave vertical curve starts
c_1	Intersection point of two straight conveyor paths
C_{25}	Constant
d	Point on carry side belt line where concave ends
Δ	Angle that defines the arc of the concave vertical curve
F_a	Total accelerating force for concave vertical curve calculations, conveyor loaded from tail to point c only
F_r	Resultant force on idlers at convex vertical curve, produced by belt tension at curve
F_R	Resultant force on idlers on a horizontal curve produced by belt tension in the curve
F_T	Horizontal motivating force for horizontal curve
F_{TC}	Motivating Force for horizontal curve idler center roller
F_{TI}	Motivating force for horizontal curve idler inside roller
F_{TP}	Total motivating force of a horizontal curve

WWW.CEMANET.ORG has a license to distribute this material to Prince of Songkla University, Pattani Campus, Pattani, Thailand

Chapter Nine Continued	
F_{TNC}	Tangential motivating force component for horizontal curve idler center roller
F_{TNI}	Tangential motivating force component for horizontal curve idler inside roller
F_{TNO}	Tangential motivating force component for horizontal curve idler outside roller
F_{TO}	Motivating Force for horizontal curve idler outer roller
F_{TPC}	Perpendicular motivating force component for horizontal curve idler center roller
F_{TPI}	Perpendicular motivating force component for horizontal curve idler inside roller
F_{TPO}	Perpendicular motivating force component for horizontal curve idler outside roller
F_{WB}	The normal force generated by the weight of the belt on a horizontal curve (lbf)
F_{WM}	The force normal to the idler rolls from the weight of the material on a horizontal curve
I_{lr}	Allowable load per troughing idler
l_c	Belt width divided by 3
L_c	Length of conveyor flight before curve point c along conveyor path
L_{X1}	Distance from tail pulley to point c_1 along conveyor path
n	Number of spaces between the idlers on the curve must be an integral number
p	Number of plies in the belt
r_1	Minimum radius of concave curve to prevent belt from lifting off the idlers, fabric belt
r_2	Minimum radius of convex curve
r_{2c}	Minimum radius of convex curve based on belt center stress
r_{ic}	Curve radius steel cable belts
r_3	Radius of horizontal curve at center of the belt
$_{a\text{-fabric belt}}$	Stress reduction at belt edge
$_{a\text{-steelcablebelt}}$	Stress reduction at belt edge
S_i	Idler spacing
S_{ic}	Maximum troughing idler spacing on the curve
T_a	Tension induced in the belt by accelerating forces at any given point
T_{ac}	Total tension at point c during acceleration
T_c	Tension at point c (or c_1) during normal running
T_r	Rated belt tension
T_1	Belt tension approaching drive pulley
T_c	Belt tension at point c or c_1
T_t	Belt tension at tail pulley
W_b	Weight of belt per unit length
W_c	Total weight to be accelerated by the belt at point c
W_m	Weight of material per unit length
W_t	Total equivalent weight of all moving components except drive and drive pulley
X	Distance between points c and c_1 along conveyor path

www.CEMAFE.com

Chapter Ten

Symbol	Description
	Angle of sandwich belt inclination
A_s	CEMA standard cross-sectional area
$A_{t\text{-}red}$	Reduced area used for molded cleat and steep angle conveyors
β	Troughing angle
BW	Belt width
B_m	Elastic modulus of belt
d	Nominal diameter of a pipe or tube conveyor
δ	Conveyor inclination angle
k	Reduction factor
k_1	Reduction factor component, a function of the difference between the angle of repose and the surcharge angle
k_2	Reduction factor component, a function of the conveyor inclination and the angle of repose
μ	Coefficient of friction between material and belts
L	Effective length of center roll for sandwich belt
L_{TR}	Pipe/tube conveyor transition distance
N	Normal load from; cover belt weight, external pressure to cover belt, cross-rigidity of the cover belt and radial component of belt tension in cover belt
n_{db}	Number of driven belts
p	Number of belt plies
P_r	Radial load on sandwich belt curve
Q_{flat}	Flexible cleat flat belt capacity
$Q_{troughed}$	Flexible cleat troughed belt capacity
R	Sandwich belt curve radius
R_h	Horizontal curve radius for pipe/tube conveyors
R_v	Vertical curve radius for pipe/tube conveyors
SF	Safety factor on material backsliding
T	Local belt tension
T_{ave}	Sandwich belt average belt tension across belt at location of interest
T_{ctr}	Sandwich belt center tension
T_{edge}	Sandwich belt edge tension
TL	Transition length of fold belt
Φ_s	Surcharge angle of the bulk material
Φ_r	Angle of repose of the bulk material

WWW.CEMANET.ORG Licensed to Thailand Office on 2/2/2017 Suranaree School, Stanislaus, , Thailand

W_b	Weight of the belt per unit length
Chapter Ten Continued	
W_m	Material weight per unit length
W	Belt width of fold belt

Chapter Eleven

Symbol	Description
BW_c	Width of belt to be cleaned
C_b	Carryback
H	CEMA impact cradle/bed rating Heavy Duty
h	Lump vertical fall height
IE	Impact energy
k	Spring constant of the impact absorbing system
L_{cb}	Carryback level
L	CEMA impact cradle/bed rating Light Duty
M	CEMA impact cradle/bed rating Medium Duty
Q	Bulk material flow rate of a homogenous stream
T_{ac}	Belt tension resulting from the application of accessories
V	Belt speed
W	Weight of the largest lump
W_e	Equivalent weight of a homogenous stream of bulk material

Chapter Twelve

Symbol	Description
aa	Height of uncovered skirtboards
a_1	Center of gravity of discharging load
	Valley angle to horizontal
β	Back plate angle to horizontal
β	Idler troughing angle
BW	Belt Width
γ	Valley side plate angle to horizontal
γ	Angle between the vertical centering, through the pulley, to the point, e_t, where the material starts its trajectory
ΔT_{Qi}	Belt tension required to shear the bulk material in feeder hopper
ΔT_s	Tension added to belt from skirtboard resistance in feeder hopper

www.CEMANET.org Document #1460 Downloaded: 2017 Pattrapol Sritrakool, Suanluang, , Thailand

μ_s	Interface friction coefficient between bulk material and skirtboard
Chapter Twelve Continued	
A_s	CEMA standard cross sectional area of material on the belt based on surcharge angle
b_1	Width of the surcharge volume at the rear of the feeder
b_2	Width of the surcharge volume at the front of the feeder
BW	Belt width
c	Standard CEMA belt edge distance
C	Width of the load at the start of the trajectory
CF	Conversion factor for induced air calculation
cg	Center of gravity of the cross section of the load shape
D	Average bulk material particle diameter
e_t	The point where the material trajectory leaves the belt
F_Q	The force to shear the material as it exits the hopper of a feeder
g	Acceleration due to gravity
h	The distance from the belt to the top of the discharging load shape
h_1	Height of the surcharge volume at the rear of the feeder
h_2	Height of the surcharge volume at the front of the feeder
H_{design}	Design opening height of a feeder
θ_i	Discharge chute cut off angle
g	Acceleration due to gravity
K_a	Factor to estimate the shear strength of the bulk material at the skirtboard wall
μ_b	Effective coefficient of friction between bulk solid,skirtboard and belt
L_a	Length required to accelerate bulk material to receiving belt speed
L_h	Length of the surcharge volume inside the feed hopper
m	Length of material in contact with sloped portion of a troughed feeder idler
P_n	Normal force on skirtboard walls
P_v	Hydrostatic pressure on skirtboards in feed hopper
γ_m	Bulk density of the bulk material
Q	Design capacity flow of bulk material
Q	Vertical load on the feeder belt under the hopper with steady state flow
Q_{dis}	Volume of displaced air in a transfer point
Q_i	Peak load on a feeder from material in hopper
r_p	Radius of the pulley (ft)
R_{rf}	Modifying factor for $T_{e\text{-}feeder}$
R_{sch}	Radius of the top of the load profile defined by the surcharge angle
r_s	Radius from the center of pulley to the cross-sectional center of gravity of the load shape
S	Height of material free fall
t	Thickness of the belt

www.SEMANET.ORG has issued this document (ABC) for the exclusive use of Standard Bank, Thailand

$T_{e\text{-}feeder}$	Total belt tension of simple feeder
Chapter Twelve Continued	
T_s	Belt Tension required to remove material from feeder due the bulk material
T_Q	The resistance (belt tension) to shear the bulk material for a simple feeder
ϕ_s	Surcharge angle
ϕ	Angle of incline of the belt conveyor
ϕ_i	Angle of internal friction of bulk solid on shear plane
V_{eb}	Vertical velocity of bulk material as it leaves the discharging chute
V_{fs}	Consolidated pressure volume
V_{sc}	The volume of the surcharge material
V_y	Falling bulk material stream vertical velocity
W	Weight of the bulk material acting at the center of gravity of the discharging load
W_s	Width between skirtboards
y_1	Vertical height of skirtboard at the rear of feeder hopper
y_2	Vertical height of skirtboard at front of feeder hopper
V	Belt speed
V_{fs}	Consolidated pressure volume
V_s	Tangential speed of the discharging load center of gravity

Chapter Thirteen

Symbol	Description
CF	Conversion Constant
N_n	Backstop pulley rotational speed
P_{dn}	Total power at drive location
rpm	Motor shaft revolutions per minute
$rpm_{AC\text{-}Motor}$	AC motor shaft speed
SF	Back stop service factor
T_{accel}	Prime mover torque - required load torque
T_{bn}	Minimum torque rating of the backstop
$Time_{accel}$	Acceleration time in seconds of the motor
WK^2	Moment of inertia of rotating parts

www.CEMANET.ORG has issued this document (1460A) on 24-10-07 to Pattapol Strachotapadung, Thailand

Chapter Fifteen

Symbol	Description
g	Acceleration due to gravity
h	Vertical travel of the takeup weight assembly
η	Efficiency of the energy absorbing device
K_{sh}	Effective friction of rope movement and sheave rotation
m	Mass of falling takeup weight assembly
m_{iP}	$0…n_{RP} – 1$
m_{iW}	$0…n_{RW} – 1$
m_{oP}	$n_{sh} + 1 - n_{RP}… n_{sh}$
m_{oW}	$n_{sh} + 1 - n_{RW}… n_{sh}$
n_R	Number of independent ropes comprising the rope system
n_{RP}	Number of rope parts pulling on takeup carriage
n_{RW}	Number of rope parts supporting W_{tu}
n_{sh}	Number of rotating sheaves
PE	Potential energy of the counter weight
R	Reaction forces on energy absorbing structure
R_1	Mechanical advantage ratio
s	Stroke of energy absorber
s_{ab}	Effective stroke of energy absorber
T_{tu}	Belt tension at takeup pulley
T_{tu-max}	Maximum belt tension at takeup pulley
T_{tu-min}	Minimum belt tension at takeup pulley
W_f	Force to overcome friction of the takeup carriage, other frictional resistance or deadband/2
W_g	Required force provided by the takeup; in gravity takeups, it is the weight
W_p	Component of weight force of takeup carriage, wheels, pulley, shaft, shaft bearings, etc., acting in direction of resultant pulley load; where elements move horizontally, W_p becomes zero
W_{tu}	Weight or Actuation Force into sheave system

WWW.CEMANET.ORG has purchased this document on Apr 22, 2015 by Program Sritrakool, Suansunandha , Thailand

Chapter Sixteen

Symbol	Description
A	Air requirements needed to lift load & belt
A_f	Fan altitude correction factor
β	Troughing Angle
BW	Belt width
F_f	Friction factor
F_e	Fan efficiency
Chapter Sixteen Continued	
F_{2e}	Filter efficiency
F_f	Friction factor
ϕ_s	Surcharge angle
γ_m	Bulk material density
H	Lift
L	Length along belt line (pulley centers)
L_2	Conveyor length
L_{if}	Inlet filter losses
L_{rg}	Inlet regulating gate (damper) losses
L_{id}	Inlet duct work losses
L_n	Loaded length of belt
L_{is}	Inlet silencer losses
L_{dd}	Discharge damper losses
L_{ds}	Discharge silencer losses
L_n	Loaded length of belt
L_{hd}	Discharge duct work (rigid duct - length varies) losses
L_{fd}	Discharge duct work (flexible duct- final connection) losses
L_{pl}	Plenum losses
L_{sum}	Sum of losses
M_e	Motor efficiency (dimensionless)
P_d	Product volume displacement
P_{flb}	Pressure to lift a fully loaded belt
P_{eb}	Pressure to lift an empty belt
Q	Bulk material Loading rate
Q	Bulk material design capacity
R_f	Fan rarefication correction factor
R_{rsf}	Modifying factor for fan pressure
R_{rsv}	Modifying factor for fan volume

WWW.CEMAWEB.COM Conveyor Equipment Manufacturers Association (CEMA) on Apr 24, 2014 to Pattarapom Sritaeol, Suanluang, , Thailand

Chapter 16 Continued	
R_{rsd}	Factor for air distraction
SF	Capacity design factor with standard edge distance
SHP	Fan shaft power
T_e	Net tension required at drive pulley
V	Belt speed
V_d	Suggested dust pickup volume
W_b	Weight of the belt per unit length
W_{cf}	Bulk material volume on the belt
W_m	Weight of the bulk material per unit length

WWW.CEMANET.ORG has issued this document (14604) on Apr 24, 2017 to Pattarapol Sritrakool, Suankularb, Thailand

WWW.CEMANET.ORG has issued this document (14604) on Apr 24, 2017 to Pattarapom Sritrakool, Suanluang,, , Thailand

This Page Left Intentionally Blank

INTRODUCTION

Limitations in the Historical Method were the motivation for introducing the Universal Method in the 6th edition and for improving on the Universal Method in the 7th edition. Longer conveyors, and overland conveyors in particular, highlighted some of the limitations of the CEMA Historical Method. The need for interpolation and extrapolation of values in lookup tables was problematic when converting from hand calculations in the 5th edition to computer programs based on the Universal Method. Many of the loss categories that were lumped together in the CEMA Historical Method, partially because their influence was minimal on shorter conveyors and partially because the fundamental physics was not well enough defined, are now better understood and can be examined as individual losses in the Universal Method.

The CEMA Historical Method is still useful for shorter conveyors. Appendix C is an excerpt taken from Belt Conveyors for Bulk Materials 5th edition. A complete copy of the CEMA Historical Method for conveyor power engineering can be obtained from CEMA as CEMA Belt Book Fifth Edition Chapter 6, Belt Tension, Power and Drive Engineering.

STANDARD CONVEYOR

The Historical Method applies to a standard conveyor defined as:

- A single flight of less than 3,000 feet in length
- Single or multiple free flowing load points
- Inclined, declined or horizontal with or without vertical curves
- A belt with a fabric carcass
- Flat or three equal roll troughing idlers
- Unidirectional or reversing at any speed
- Single or multiple drives
- Gravity or automatic take ups
- A maximum belt tension of 16,000 lbf

BASIC POWER REQUIREMENTS

The horsepower, hp, required at the drive of a belt conveyor, is derived from the pounds of the effective tension,Te, required at the drive pulley to propel or restrain the loaded conveyor at the design velocity of the belt V, in fpm:

$$hp = \frac{T_e \times V}{33{,}000}$$

Equation C.1
Hp equation

To determine the effective tension,T_e, it is necessary to identify and evaluate each of the individual forces acting on the conveyor belt and contributing to the tension required to drive the belt at the driving pulley. Te is the final summarization of the belt tensions produced by forces such as:

- The gravitational load to lift or lower the material being transported.
- The frictional resistance of the conveyor components, drive, and all accessories while operating at design capacity.
- The frictional resistance of the material as it is being conveyed.
- The force required to accelerate the material continuously as it is fed onto the conveyor by a chute or a feeder.

www.SAMNET.ORG has issued the document (1109) to user 2/5/2014 to Pattarapom Thapool, Suranaree University of Technology

$$T_e = L \times K_t \times (K_x + K_y \times W_b + 0.015W_b) + W_m \times (L \times Ky \pm H) + T_p + T_{am} + T_{ac}$$

Equation C.2

T_e, CEMA Historical Method formula for calculating the effective tension, T_e

Where:

H = Vertical distance that material is lifted or lowered, ft"
K_t = Ambient temperature correction factor
K_x = Factor for the frictional resistance of the idlers and the sliding resistance between the belt and idler rolls per unit length (lbf/ft)
K_y = Carrying run factor for the resistance of the belt and load to flexure as the belt and load move over the idlers (dimensionless)
L = Length of conveyor (ft)
S_i = Troughing idler spacing (ft)
T_{ac} = Total of the tensions from conveyor accessories (lbf)
T_{am} = Tension resulting from the force to accelerate the material continuously as it is fed onto the belts (lbf)
T_p = Tension resulting from resistance of belt to flexure around pulleys and bearings, total for all pulleys (lbf)
W_b = Weight of the belt per unitl length (lbf/ft)
W_m = Weight of the bulk material per unit length (lbf/ft)

WWW.CEMANET.ORG has issued this document (1404) on Apr 4, 2017 to Pattarapom Sirakool, Siamlubes Co., Ltd., Thailand

KX, IDLER FRICTION FACTOR

The frictional resistance of idler rolls to rotation and sliding resistance between the belt and the idler rolls can be calculated by using the multiplying factor K_x. K_x is the force, in lbf/ft of conveyor length, to rotate the idler rolls, carrying and return, and to cover the sliding resistance of the belt on the idler rolls. The K_x value required to rotate the idlers is calculated using Equation C4.

The resistance of the idlers to rotation is primarily a function of bearing, grease, and seal resistance. A typical idler roll equipped with anti-friction bearings and supporting a load of 1,000 lbf will require a turning force at the idler roll periphery of from 0.5 to 0.7 lbf to overcome the bearing friction. The milling or churning of the grease in the bearings and the bearing seals will require additional force. This force, however, is generally independent of the load on the idler roll.

Under normal conditions, the grease and seal friction in a well-lubricated idler will vary from 0.1 to 2.3 lbf/idler, depending upon the type of idler, the seals, and the condition of the grease.

Sliding resistance between the belt and idler rolls is generated when the idler rolls are not exactly at 90 degrees to the belt movement. After initial installation, deliberate idler misalignment is often an aid in training the belt. Even the best installations have a small requirement of this type. However, excessive idler misalignment results in an extreme increase in frictional resistance and should be avoided.

Belt Width (in)	Bulk Density lbf/ft³		
	30 to 74	75 to 129	130 to 200
18	3.5	4.0	4.5
24	4.5	5.5	6.0
30	6.0	7.0	8.0
36	9.0	10.0	12.0
42	11.0	12.0	14.0
48	14.0	15.0	17.0
54	16.0	17.0	19.0
60	18.0	20.0	22.0
72	21.0	24.0	26.0
84	25.0	30.0	33.0
96	30.0	35.0	38.0

Table C.3
Estimated average belt weight for multiple and reduced ply belts

Some troughing idlers are designed to operate with a small degree of tilt in the direction of belt travel, to aid in belt training. This tilt results in a slight increase in sliding friction that must be considered in the horsepower formula.

$$K_x = 0.00068 \times (W_b + W_m) + \frac{S_i}{A_i} \quad \text{(lbf/ft)}$$

Figure C.4
K_x, Equation for Values of K_x per unit length

www.CEMANET.ORG has issued this document (1.0 ply) on Apr 24, 2017 to Paragon Technical Services, Inc. Individual

Where:

A_i = Dimensionless factor from Table C.5
S_i = Idler spacing (ft)
W_b = Belt weight per unit length (lbf/ft)
W_m = Bulk material conveyed, weight per unit length (lbf/ft)

A_i	Idler Roll Diameter (in)	CEMA Idler Class
1.5	6.0	C6, D6
1.8	5.0	B5, B5, C5
2.3	4.0	B4, C4
2.4	7.0	E7
2.8	6.0	E6

Table C.5
A_i, Frictional resistance factors

The A_i values are averages and include frictional resistance to rotation for both the carrying and return idlers. Return idlers are based on single roll type. If two roll V return idlers are used, increase A_i value by 5%. In the case of long conveyors or very high belt speed (over 1,000 fpm) refer to CEMA Member companies for more specific values of A_i.

K_Y FACTOR FOR CALCULATING THE FORCE OF BELT AND LOAD FLEXURE OVER THE IDLERS

Both the resistance of the belt to flexure as it moves over idlers and the resistance of the load to flexure as it rides the belt over the idlers develop belt-tension forces. K_y is a multiplying factor used in calculating these belt tensioning forces.

Tables C.7 and C.8 give values of K_y for carrying idlers as it varies with differences in the weight/ft of the conveyor belt, W_b; load, W_m; idler spacing, S_i; and the percent of slope or angle that the conveyor makes with the horizontal. When applying idler spacing, Si, other than specified in Tables C.7 and C.8, use Table C.11 to determine a corrected K_y value.

L = 800 ft, $(W_b + W_m)$ = 150 lbf/ft, θ = 12%, S_i = 4.0 ft
Interpolate the K_y value:
From Table C.4: K_y = 0.017 at S_i = 3.0 ft
Table C.8 K_y for S_i = 3.0 ft: K_y of 0.0170 lies between 0.0160 and 0.0180 reference values
Table C.8 K_y for S_i = 4.0 ft: K_y lies between 0.0187 and 0.0213 reference values

$$K_y = \frac{(0.0160 - 0.0170)}{(0.0160 - 0.0180)} \times (0.0213 - 0.0187) + 0.0187 = 0.020$$

Figure C.6
K_y, Example interpolation

www.CEMANET.ORG licensed this document (4410) on April 24, 2017 to Pattaraporn Sritrakul (Suanluang) Thailand

Conveyor Length (ft)	(W_b+W_m) (lbf/ft)	Percent Slope (%)						
		0	3	6	9	12	24	33
		Approximate Slope (deg)						
		0	2	3.5	5	7	14	18
250	20	0.035	0.035	0.034	0.031	0.031	0.031	0.031
	50	0.035	0.034	0.033	0.032	0.031	0.028	0.027
	75	0.035	0.034	0.032	0.032	0.030	0.027	0.025
	100	0.035	0.033	0.032	0.031	0.030	0.026	0.023
	150	0.035	0.035	0.034	0.033	0.031	0.025	0.021
	200	0.035	0.035	0.035	0.035	0.032	0.024	0.018
	250	0.035	0.035	0.035	0.035	0.033	0.021	0.018
	300	0.035	0.035	0.035	0.035	0.032	0.019	0.018
400	20	0.035	0.034	0.032	0.030	0.030	0.030	0.030
	50	0.035	0.033	0.031	0.029	0.029	0.026	0.025
	75	0.034	0.033	0.030	0.029	0.028	0.024	0.021
	100	0.034	0.032	0.030	0.028	0.028	0.022	0.019
	150	0.035	0.034	0.031	0.028	0.027	0.019	0.016
	200	0.035	0.035	0.033	0.030	0.027	0.016	0.014
	250	0.035	0.035	0.034	0.030	0.026	0.017	0.016
	300	0.035	0.035	0.034	0.029	0.024	0.018	0.018
500	20	0.035	0.033	0.031	0.030	0.030	0.030	0.030
	50	0.034	0.032	0.030	0.028	0.028	0.024	0.023
	75	0.033	0.032	0.029	0.027	0.027	0.021	0.019
	100	0.033	0.031	0.029	0.028	0.026	0.019	0.016
	150	0.035	0.033	0.030	0.027	0.024	0.016	0.016
	200	0.035	0.035	0.030	0.027	0.029	0.016	0.016
	250	0.035	0.035	0.030	0.025	0.021	0.016	0.015
	300	0.035	0.035	0.029	0.024	0.019	0.018	0.018
600	20	0.035	0.032	0.030	0.029	0.029	0.029	0.029
	50	0.033	0.030	0.029	0.027	0.026	0.023	0.021
	75	0.032	0.030	0.028	0.026	0.024	0.020	0.016
	100	0.032	0.030	0.027	0.025	0.022	0.016	0.016
	150	0.035	0.031	0.026	0.024	0.019	0.016	0.016
	200	0.035	0.031	0.026	0.021	0.017	0.016	0.016
	250	0.035	0.031	0.024	0.020	0.017	0.016	0.016
	300	0.035	0.031	0.023	0.018	0.018	0.018	0.018
800	20	0.035	0.031	0.030	0.029	0.029	0.029	0.029
	50	0.032	0.029	0.028	0.026	0.025	0.021	0.018
	75	0.031	0.029	0.026	0.024	0.022	0.016	0.016
	100	0.031	0.028	0.025	0.022	0.020	0.016	0.016
	150	0.034	0.028	0.023	0.019	0.017	0.016	0.016
	200	0.035	0.027	0.021	0.016	0.016	0.016	0.016
	250	0.035	0.026	0.020	0.017	0.016	0.016	0.016
	300	0.035	0.025	0.018	0.018	0.018	0.018	0.018
Table C.7 values of K_y based on the idler spacing:			$W_b + W_m$ (lbf/ft)		< 50	50 to 99	100 to 149	>150
			S_i (ft)		4.5	4.0	3.5	3.0

WWW.CEMANET.ORG has issued this document (0.0.0) on Apr 24, 2014 to Patarapong Thavod, Chulalongkorn, Thailand

Table C.7

K_y, Values for conveyors 250 to 800 feet long

CEMA HISTORICAL METHOD K_x, K_y AND K_t FACTORS

Conveyor Length (ft)	(W_b+W_m) (lbf/ft)	Percent Slope (%)						
		0	3	6	9	12	24	33
		Approximate Slope (deg)						
		0	2	3.5	5	7	14	18
1000	50	0.031	0.028	0.026	0.024	0.023	0.019	0.016
	75	0.030	0.027	0.024	0.022	0.019	0.016	0.016
	100	0.030	0.026	0.022	0.019	0.017	0.016	0.016
	150	0.033	0.024	0.019	0.016	0.016	0.016	0.016
	200	0.032	0.023	0.017	0.016	0.016	0.016	0.016
	250	0.033	0.022	0.017	0.016	0.016	0.016	0.016
	300	0.033	0.021	0.018	0.018	0.018	0.018	0.018
1400	50	0.029	0.026	0.024	0.022	0.021	0.016	0.016
	75	0.028	0.024	0.021	0.019	0.016	0.016	0.016
	100	0.028	0.023	0.019	0.016	0.016	0.016	0.016
	150	0.029	0.020	0.016	0.016	0.016	0.016	0.016
	200	0.030	0.021	0.016	0.016	0.016	0.016	0.016
	250	0.030	0.020	0.017	0.016	0.016	0.016	0.016
	300	0.030	0.019	0.018	0.018	0.018	0.018	0.018
2000	50	0.027	0.024	0.022	0.020	0.016	0.016	0.016
	75	0.026	0.021	0.019	0.016	0.016	0.016	0.016
	100	0.025	0.020	0.016	0.016	0.016	0.016	0.016
	150	0.026	0.017	0.016	0.016	0.016	0.016	0.016
	200	0.024	0.016	0.016	0.016	0.016	0.016	0.016
	250	0.023	0.016	0.016	0.016	0.016	0.016	0.016
	300	0.022	0.018	0.018	0.018	0.018	0.018	0.018
2400	50	0.026	0.023	0.021	0.018	0.017	0.016	0.016
	75	0.025	0.021	0.017	0.016	0.016	0.016	0.016
	100	0.024	0.019	0.016	0.016	0.016	0.016	0.016
	150	0.024	0.016	0.016	0.016	0.016	0.016	0.016
	200	0.021	0.016	0.016	0.016	0.016	0.016	0.016
	250	0.021	0.016	0.016	0.016	0.016	0.016	0.016
	300	0.020	0.018	0.018	0.018	0.018	0.018	0.018
3000	50	0.024	0.022	0.019	0.017	0.016	0.016	0.016
	75	0.023	0.019	0.016	0.016	0.016	0.016	0.016
	100	0.022	0.017	0.016	0.016	0.016	0.016	0.016
	150	0.022	0.016	0.016	0.016	0.016	0.016	0.016
	200	0.019	0.016	0.016	0.016	0.016	0.016	0.016
	250	0.018	0.016	0.016	0.016	0.016	0.016	0.016
	300	0.018	0.018	0.018	0.018	0.018	0.018	0.018
Table C.8 values of K_y based on the idler spacing:			$W_b + W_m$ (lbf/ft)		< 50	50 to 99	100 to 149	>150
			S_i (ft)		4.5	4.0	3.5	3.0

www.CEMANET.org has issued this product (1460) on Apr 24, 2017 to Sugarcon Silver Publishing Co., Thailand

Table C.8

K_y, Values for conveyors 250 to 800 feet long

K_y values in Tables C.7 and C.8 are applicable for conveyors up to 3,000 foot long with a single slope and a maximum of 3% sag of the belt between troughing and return idlers. The return idler spacing is 10 feet nominal and the loading of the belt is uniform and continuous.

Equation C.9 provides K_y values for the carrying idlers of belt conveyors whose length, number of slopes, and/or average belt tensions exceed the limitations specified above for the conveyors covered by Tables C.7 and C.8. This equation is applicable for conveyors in which the average belt tension is 16,000 lbs or less. To determine the K_y factor for use in calculating conveyors of this class, it is necessary, first, to assume a tentative value for the average belt tension. The graphical method for determining conveyor horsepower (pages 141 through 145 of the 5th edition) may be of assistance in estimating this initial tentative value of average belt tension.

After estimating the average belt tension and selecting an idler spacing, refer to Table C.12 to obtain values for A and B for use in the following equation:

$$K_y = (W_b + W_m) \times A \times 10^{-4} + B \times 10^{-2}$$

Equation C.9

K_y, Calculation of K_y for initial value

By using Equation C.9, an initial value for K_y can be determined and an initial average belt tension can be subsequently calculated. The comparison of this calculated average belt tension with the original tentative value will determine the need to select another assumed belt tension. Recalculate K_y and calculate a second value for the average belt tension. The process should be repeated until there is reasonable agreement between the estimated and final calculated average belt tensions.

There are no tabulated K_y values or mathematical equations to determine a K_y for conveyors having an average belt tension exceeding 16,000 lbf. A reasonably accurate value that can be used for calculations is K_y equals 0.016. It is suggested that this value for K_y be considered a minimum, subject to consultation with a CEMA member company on any specific applications.

The force that results from the resistance of the belt to flexure as it moves over the idlers for the return run is calculated in the same manner as the resistance to flexure for the carrying run, except a constant value of 0.015 is used in place of K_y. The resistance of the belt flexure over idler rolls is a function of the belt construction, cover thickness and indentation by the idler rolls, type of rubber compound, idler roll diameter, temperature, and other factors. The belt flexing resistance increases at lower temperatures.

WWW.CEMANET.ORG emailed to Pitsanupom Sritrakool (SHELL) on 7/31/24, 2:41 to Pitsanupom Sritrakool (SHELL), Thailand

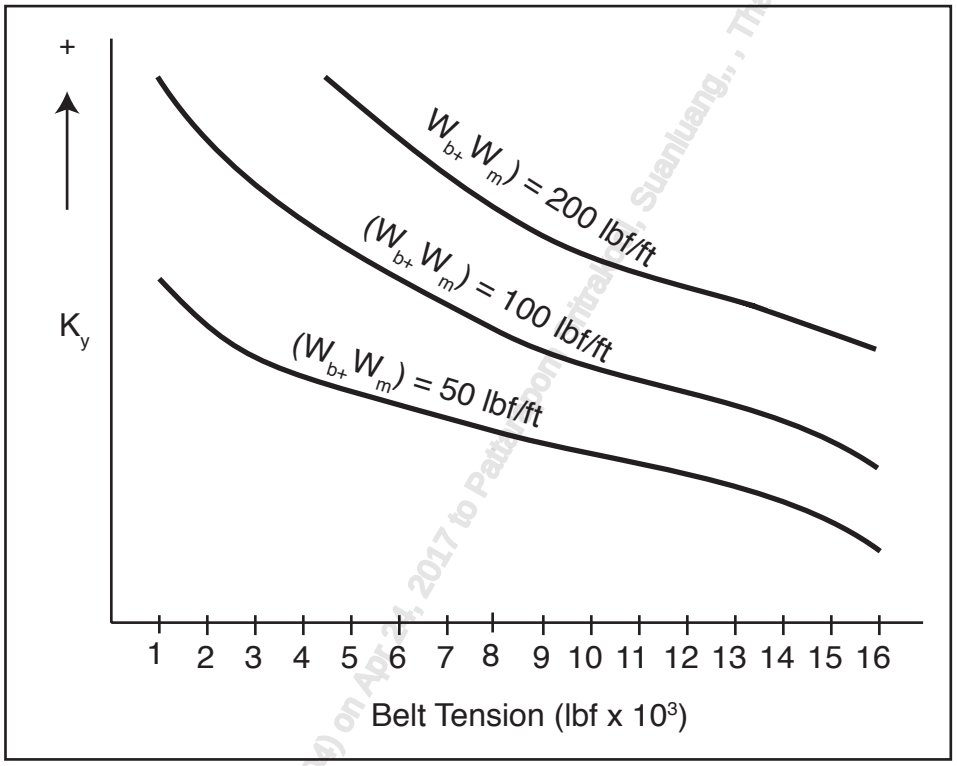

Figure C.10
Effect of belt tension on resistance of material flexure over idler rolls

WWW.CEMANET.ORG has issued this document (1460d) on Apr 24, 2017 to Patta Sorn Chitrakon, Suanluang, , , Thailand

W_b+W_m (lbf/ft)	S_i (ft)	Reference Values of K_y for Interpolation									
		0.016	0.018	0.020	0.022	0.024	0.026	0.028	0.030	0.032	0.034
< 50	3.0	0.016	0.016	0.016	0.017	0.018	0.020	0.021	0.023	0.024	0.026
	3.5	0.016	0.016	0.017	0.019	0.021	0.022	0.024	0.026	0.027	0.029
	4.0	0.016	0.017	0.018	0.020	0.022	0.024	0.026	0.028	0.030	0.032
	4.5	0.016	0.018	0.020	0.022	0.024	0.026	0.028	0.030	0.032	0.034
	5.0	0.017	0.020	0.021	0.024	0.025	0.027	0.029	0.031	0.033	0.035
50 to 99	3.0	0.016	0.016	0.017	0.019	0.021	0.022	0.024	0.026	0.027	0.029
	3.5	0.016	0.017	0.019	0.021	0.022	0.024	0.026	0.028	0.030	0.032
	4.0	0.016	0.018	0.020	0.022	0.024	0.026	0.028	0.030	0.032	0.034
	4.5	0.018	0.019	0.021	0.024	0.025	0.027	0.030	0.032	0.034	0.035
	5.0	0.018	0.021	0.023	0.025	0.027	0.029	0.032	0.034	0.035	0.035
100 to 149	3.0	0.016	0.016	0.019	0.021	0.023	0.025	0.027	0.029	0.031	0.033
	3.5	0.016	0.018	0.020	0.022	0.024	0.026	0.028	0.030	0.032	0.034
	4.0	0.018	0.020	0.021	0.023	0.025	0.028	0.030	0.031	0.033	0.035
	4.5	0.019	0.021	0.023	0.025	0.027	0.030	0.031	0.033	0.035	0.035
	5.0	0.020	0.023	0.025	0.027	0.030	0.032	0.033	0.035	0.035	0.035
150 to 199	3.0	0.016	0.018	0.020	0.022	0.024	0.026	0.028	0.030	0.032	0.034
	3.5	0.017	0.020	0.022	0.024	0.026	0.027	0.029	0.031	0.033	0.035
	4.0	0.019	0.021	0.024	0.025	0.027	0.028	0.030	0.033	0.035	0.035
	4.5	0.021	0.022	0.025	0.027	0.029	0.031	0.032	0.035	0.035	0.035
	5.0	0.023	0.025	0.027	0.029	0.031	0.033	0.035	0.035	0.035	0.035
200 to 249	3.0	0.016	0.018	0.020	0.022	0.024	0.026	0.028	0.030	0.032	0.034
	3.5	0.018	0.020	0.022	0.024	0.026	0.028	0.030	0.031	0.033	0.035
	4.0	0.019	0.022	0.024	0.026	0.027	0.029	0.031	0.032	0.034	0.035
	4.5	0.021	0.023	0.025	0.028	0.030	0.032	0.033	0.035	0.035	0.035
	5.0	0.023	0.025	0.027	0.030	0.032	0.034	0.035	0.035	0.035	0.035

Table C.11
Corrected K_y factors for interpolation

The resistance of the material load to flexure over idler rolls is a function of belt tension, type of material, shape of the load cross section, and idler spacing. Measurements indicate that the most important factor is belt tension, because this controls the amount of load flexure. Figure C.10 shows this relationship for a typical idler spacing.

For a given weight per foot of belt and load, the running resistance, in pounds per foot of load, decreases with increases in belt tension. For a given belt tension, running resistance, in pounds per foot of load, increases with increases in the amount of load. However, the running resistance is not proportional to the weight of the load.

WWW.CEMANET.ORG has issued this publication in PDF format for the personal use of individual purchasers only.

Average Belt Tension (lbf)	S_i Idler Spacing (ft)									
	3.0		3.5		4.0		4.5		5.0	
	A	B	A	B	A	B	A	B	A	B
1,000	2.1500	1.5650	2.1955	1.9250	2.2000	2.2500	2.2062	2.5840	2.1750	2.9100
2,000	1.8470	1.3450	1.6674	1.7440	1.6156	1.9820	1.5643	2.1970	1.5429	2.3310
3,000	1.6286	1.2370	1.4667	1.5930	1.4325	1.7990	1.4194	1.9910	1.4719	2.0910
4,000	1.4625	1.1640	1.3520	1.4650	1.3295	1.6590	1.3250	1.8250	1.3850	1.9380
5,000	1.2828	1.1220	1.1926	1.3810	1.1808	1.5590	1.1812	1.7140	1.2283	1.8390
6,000	1.1379	1.0760	1.0741	1.3180	1.0625	1.4720	1.0661	1.6270	1.0962	1.7610
7,000	1.0069	1.0390	0.9448	1.2560	0.9554	1.4040	0.9786	1.5490	1.0393	1.6570
8,000	0.9172	0.9880	0.8552	1.1940	0.8643	1.3370	0.8875	1.4720	0.9589	1.5830
9,000	0.8207	0.9880	0.8000	1.1200	0.7893	1.2720	0.8339	1.3880	0.8911	1.5070
10,000	0.7241	0.9180	0.7362	1.0660	0.7196	1.2160	0.7821	1.3140	0.8268	1.4300
11,000	0.6483	0.8850	0.6638	1.0240	0.6643	1.1670	0.7375	1.2380	0.7768	1.3400
12,000	0.5828	0.8420	0.5828	0.9220	0.6232	1.1000	0.6750	1.1800	0.7411	1.2420
13,000	0.5207	0.7980	0.5241	0.9380	0.5732	1.0400	0.6179	1.1160	0.6821	1.1690
14,000	0.4690	0.7630	0.4810	0.8970	0.5214	0.9960	0.5571	1.0690	0.6089	1.1230
15,000	0.4172	0.7180	0.4431	0.8410	0.4732	0.9350	0.5179	1.0060	0.5607	1.0630
16,000	0.3724	0.6630	0.3966	0.7800	0.4232	0.8750	0.4589	0.9580	0.5054	1.0090
A minimum K_y value of 0.016 should be used when tensions exceed 16,000 lbf.										

Table C.12
A and B Values for Equation C.9

Information similar to that in Figure C.12 has been developed by analyzing a series of field tests on belt conveyors of different widths carrying different materials. Many investigators, both in the United States and abroad, have analyzed similar series of field tests and have obtained similar results. Although the exact expressions differ, all investigators agree that changes in belt tension affect the force required to flex the material over idler rolls to a substantially greater degree than changes in the material handled. The latter does have a noticeable effect, and thus appears to be of less importance in the overall calculation.

WWW.CEMANET.ORG has issued this document (4464) on Apr 2 2017 to [illegible] for Single User Only. Copyright protected by CEMA. [illegible]

K_T, AMBIENT TEMPERATURE CORRECTION FACTOR

Idler rotational resistance and the flexing resistance of the belt increase in cold weather operation. In extremely cold weather the proper lubricant for idlers must be used to prevent excessive resistance to idler rotation.

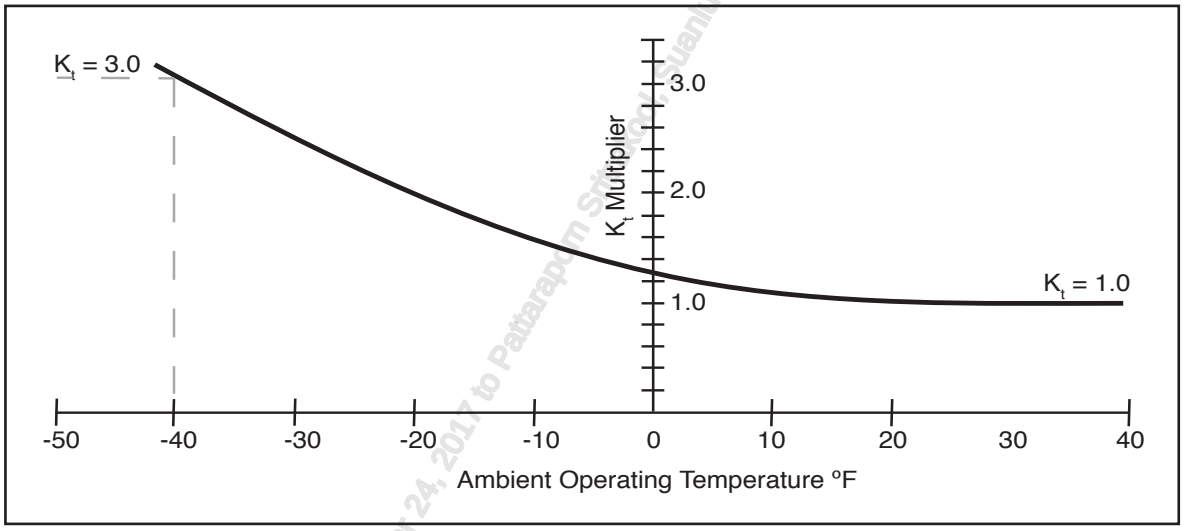

Figure C.13
K_t, Temperature correction factor

K_t is a multiplying factor that will increase the calculated value of belt tensions to allow for the increase resistances that can be expected due to low temperatures. Operation at temperatures below −15 ºF involves problems in addition to horsepower considerations. Consult conveyor manufacturer for advice on special belting, greasing, and cleaning specifications and necessary design modification.

WWW.CEMANET.ORG has issued this document (14604) on Apr 24, 2017 to Pattarapom Sirisuwan, Suanluang, , Thailand

WWW.CEMANET.ORG has issued this document (1460) on Apr 24, 2017 to Pattarapom Sritrakool, Suanluang, , , Thailand

This Page Left Intentionally Blank

INTRODUCTION

A trouble-free belt conveyor operation is the product of three properly executed stages of development followed by an effective maintenance program.

- Design
- Manufacturing
- Installation

Less than satisfactory performance in any of these developmental stages will negatively impact all others, resulting in unanticipated operating problems. CEMA Standards and Belt Conveyors for Bulk Materials already addressed many of the design and maintenance considerations critical to proper operation. It is not our intent to specify minimum levels of manufacturing quality. Indeed, it is the responsibility of each manufacturer to produce a product which he and the user agree are suitable for the intended use.

This document will specify minimum standards for acceptable tolerances for structural and mechanical erection and installation of belt conveyors. In addition, it will provide helpful suggestions that can be used to meet or exceed these standards. Each item will be addressed in the sequence in which it is encountered in the field.

Notes:

- It is important that ANSI lockout procedures be followed when making adjustments to bring conveyor machinery into tolerance (ref: ASME B15.1, B20.1, and ANSI Z244.1).
- All mechanical tolerances and benchmarks should be documented by millwrights.

CONVEYOR STRINGER ALIGNMENT

Trusses and channel frame conveyor stringers must be installed parallel, straight, square, and level to allow proper belt training. During installation, dimensional checks shall be made to insure that the following tolerances in the idler carrying chords are not exceeded.

Note:

These tolerances are guidelines for design / manufacture to facilitate proper idler and belt alignment in accordance with the Idler Alignment section of this standard. The overriding issue is idler and belt alignment as opposed to structural alignment.

Parallel

A maximum tolerance of ± 1/8 inch (± 3 mm) shall be allowed for the "back to back" dimension in channel frame or angle stringers. Similarly, ± 1/8 inch (± 3 mm) shall be allowed between webs of I-beams, wide flange beams, or tees when used as truss chords, Figure D.1.

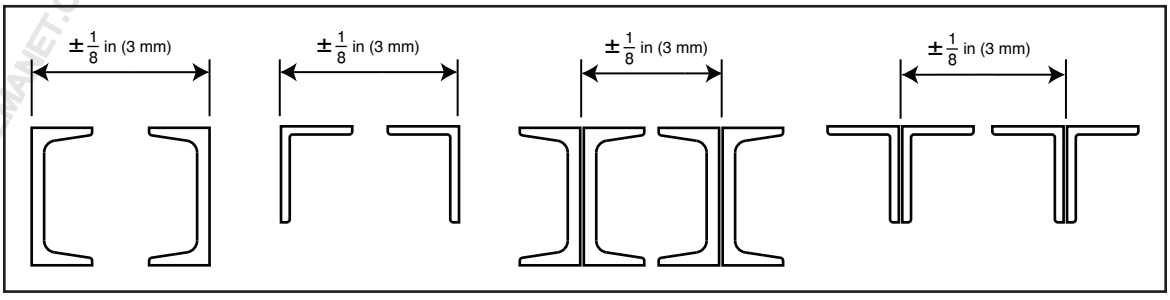

Figure D.1
Maximum back to back parallel tolerance

WWW.CEMANET.ORG - Licensed to Patrick Shuang Sichuang, , Thailand

Straightness

The maximum allowable lateral offset in conveyor stringers shall be 1/8 inch (3 mm) in 40 feet (12 m) of length, Figure D.2.

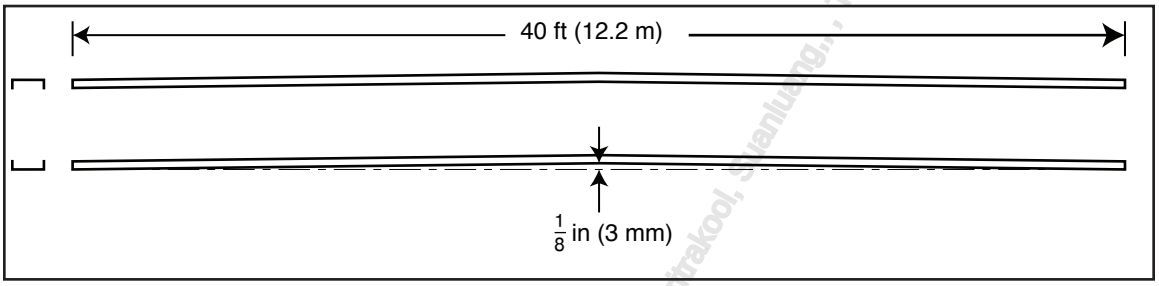

Figure D.2
Maximum lateral offset tolerance

Squareness

A check on squareness can be made by comparing diagonal measurements between idlers as shown in Figure D.3. Lines A and B must be within 1/8 inch (3 mm) to assure conveyor frame squareness. Return idlers should, likewise, be installed level and parallel to the head and tail pulleys.

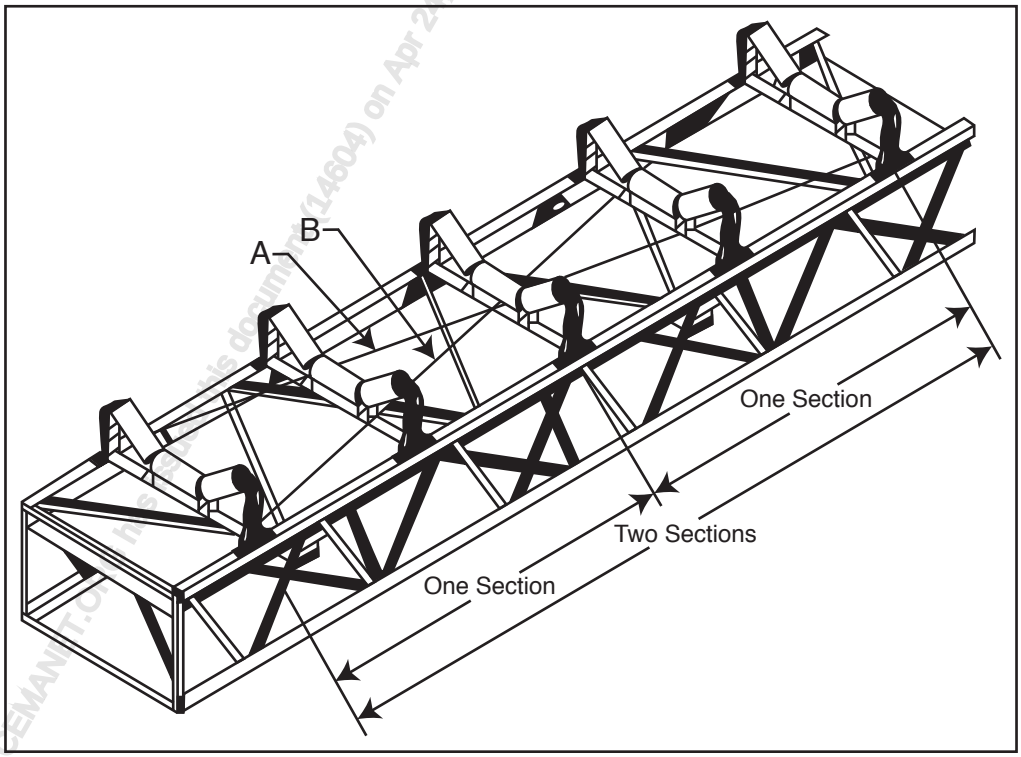

Figure D.3
Conveyor frame and idler alignment

www.CEMANET.OR... This ... document (14604) on Apr 24, 201... Pattarapom Sirirakool, Suanluang, ..., Thailand

Level

The two idler support members shall be level within 1/8 inch (3 mm)regardless of belt width. In addition, the elevation of stringer above support structure shall be held within ± 1/4 inch (6 mm), Figure D.4.

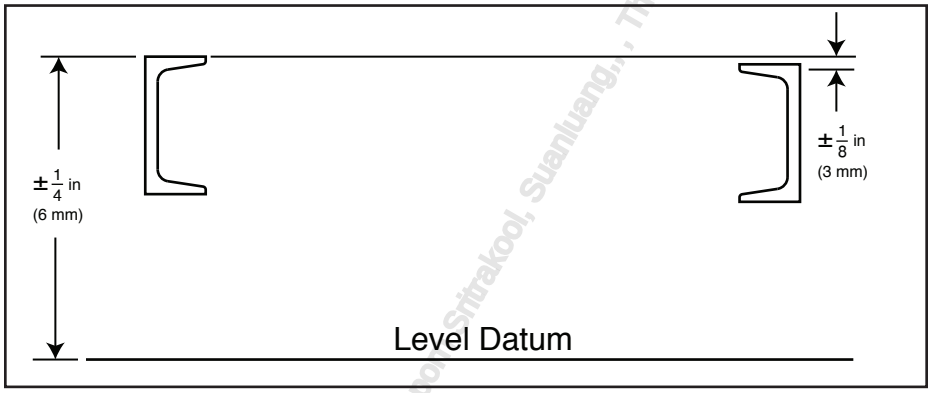

Figure D.4
Idler support structure tolerance

Note:
Designers and fabricators must compensate for mill tolerance of members to satisfy these requirements.

PULLEY, SHAFT AND BEARING ALIGNMENT

Except for special purpose applications (such as turnover exit), all belt conveyor pulleys should be set level, and the shaft centerline should be perpendicular to the centerline of the belt. Significant departure in alignment will result in unnecessary thrust load on bearings, accelerated and uneven pulley lagging wear, and belt training problems.

It is most convenient to field align pulleys after supporting steel is secured and before belting is installed. After alignment, it is good practice to match mark bearing housing and supporting steel to enable realignment if disturbed for any reason. Intentional misalignment should not be used as a means to counteract other misalignment forces for training the belt.

Because of pulley manufacturing tolerances, alignment measurements should be taken on the shaft and not on pulley elements. By use of adjustable bearing stops (commonly supplied by the conveyor manufacturer) and full bearing surface shim packs (commonly supplied by the erector), the following alignment tolerances can be reasonably achieved: Using a level and checking both sides of the pulley, shaft elevations the bearings should be set within 1/ 32 of an inch (0.8 mm), Figure D.5.

WWW.CEMAnet.org - Reissued for comment (14-01 on Apr 24, 2017 to Pattarapol Sritrakool, Suanluang, , Thailand

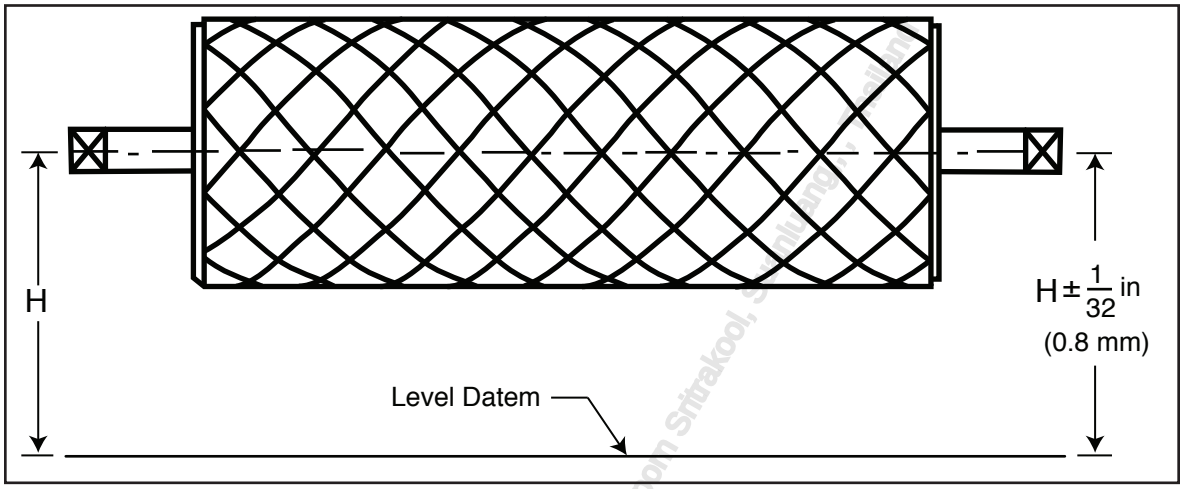

Figure D.5
Pulley and shaft elevation tolerance

Measuring from a line constructed perpendicular to the conveyor centerline, the shaft centerline should not deviate greater than ± 1/32 of an inch (0.8 mm) at the bearings, Figure D.6. Because of pulley locations and access thereto, it is common practice to utilize offset lines and plumb bobs to make these measurements.

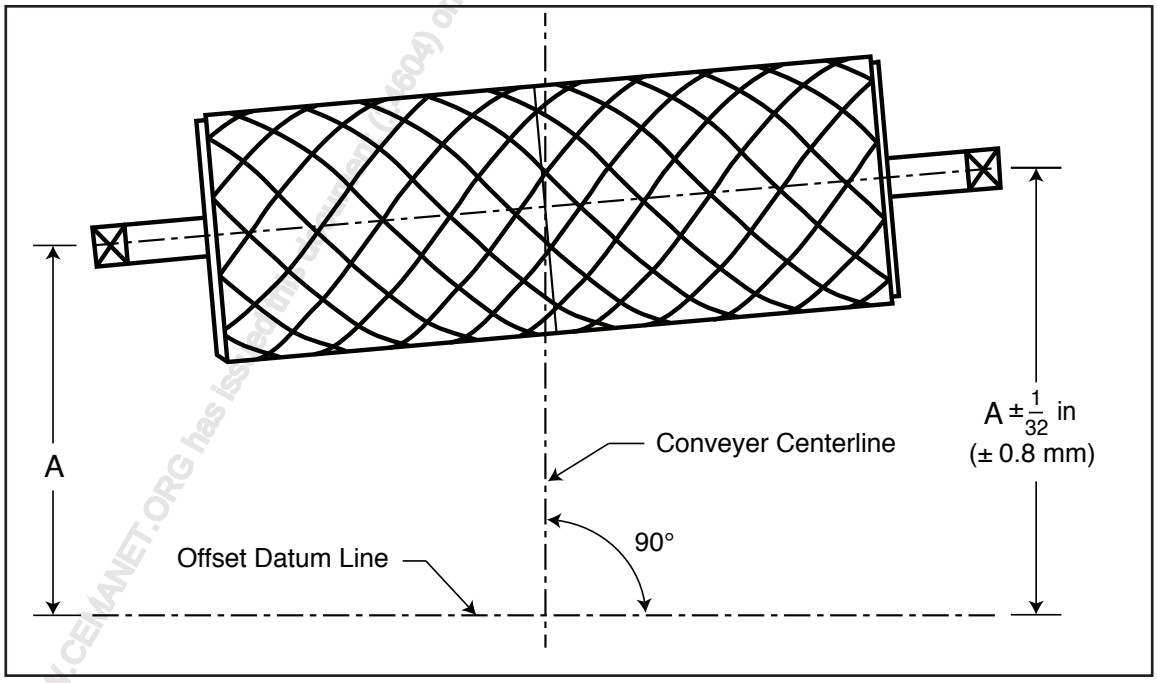

Figure D.6
Pulley and shaft squareness tolerance

Note:
See Figure D.3 for Squareness Check.

When pulleys are mounted on shafts by the equipment supplier, they shall be secured to the shaft in accordance with the recommended practice of the locking element manufacturer. When supplied separately, they should be located on the shaft ±1/8 of an inch (3 mm) of the position shown on the drawings.

If pulleys and shafts are field assembled or repositioned, pulley manufacturer recommendations must be followed to avoid dishing of end discs and residual end disc pre-stress.

With some locking elements, it may be necessary to check and tighten clamping bolts several times to insure security of hub and shaft assembly. Manufacturer's recommendations should be followed with regard to checks and bolt torques.

Pulleys, shafts, bearings, and supporting structure may be shipped in various degrees of pre-assembly. Bearings should be mounted and set on the pulley shaft before placement on the supporting structure. Procedures and tolerances for bearing setting should be obtained from the bearing manufacturer. Due to manufacturing and erection tolerances, final bearing alignments should be done in the field after the supporting structure has been secured.

Improper placement of expansion type bearings may result in thrust pre-load, causing premature bearing failure. Care should be taken to ensure expansion bearings allow movement in both directions.

Bearing seals often limit alignment of bearing housings when installed on the supporting structure. Labyrinth seals can require alignment within 0.5 degrees. Taconite duty seals can require alignment within 0.1 degrees. Limits may vary by design so consulting with the bearing manufacturer is recommended. Alignment is often confirmed by measurement of the seal gap around its circumference and observing whether a gap exists all the way around the seal. Tapered or thin shims between the housing and support are typically used for correction. When doing this it is important to maintain support between the bearing and supporting structure in the housing load zone and the bolt locations.

REDUCER/MOTOR BASE

Installation Tolerances

Characteristic of all operating mechanical apparatus, correct manufacturing and installation alignment tolerances are necessary to prolong operating life and prevent unnecessary breakdowns. Also, since many reducer manufacturers do not factory oil their reducers, it is imperative that oil levels be checked and maintained by field personnel. Reducer/motor base installation guidelines generally fall into two categories, concrete or structural steel. Either should be sufficiently rigid to minimize vibration and to maintain alignment between the motor and the driven equipment within the manufacturer's recommended tolerances. Base application information may apply to either motors or reducers, or to both in combination.

Fabricated Structural Bases

Structural bases require a surface which, if not flat, can be shimmed to proper position in the structure, using 0.003 inch to 0.005 inch (0.05 to 0.10 mm) shim packs. After the base plate is secured, flatness should be verified and shims added, if necessary.

www.SAMANEJOR.com Restricted use of this document (3604) on 4/2017 to Patarapin Sirikool, Sirindhorn, Thailand

Concrete Supports

Concrete foundation-type supports are normally the most rigid and secure. However, the installation must be correct within certain limitations to provide acceptable tolerances in the final arrangement with a minimum of shimming. Sole plates can provide a means of adjusting and aligning the motors and reducers on a common bed plate to an acceptable tolerance prior to final grouting. Reducer and motor mounting plate surface should be flat to tolerances acceptable to the manufacturer. The bottom of the sole plate needs no tolerance requirement in as much as the grout provides a full bearing surface.

If the output from the reducer is direct-coupled to a driven unit, the reducer shaft centerline should be held to a minus tolerance only, which would allow shimming by the erector if required. The same is true of the motor shaft in relation to the reducer input shaft.

It is mandatory that alignment checks be made after the installation is complete, but before operation. Misalignment should be no more than 50 percent of the misalignment tolerance allowed by the manufacturer of the coupling being aligned.

Structural Steel Supports

Although combination fabricated structural bases are normally built as a unit, it is not always necessary to provide continuous support in the structural steel below the units; however, it is necessary to provide an integrated and sufficiently rigid connection between reducer base and support steel to accommodate every bolt hole.

The supporting structure must minimize deflection and distortion under load, preventing warping of the motor/reducer base and subsequent unacceptable misalignment.

FLEXIBLE COUPLING ALIGNMENT

Flexible couplings are used in conveyor drive trains to transmit torque from one rotating element to another. In doing so, they protect expensive driving and driven machinery from misalignment, shock loads, vibration, and thrust loads.

It is true that most couplings will operate under severe misalignment for a given period of time; however, the penalty is reduction in useful life. For this reason, manufacturers of couplings have established misalignment tolerances that should be strictly adhered to during field assembly.

A prerequisite to proper alignment is a rigid and level base on which the drive and driven elements are to be set. If they are to be mounted on a steel frame, a common base plate is necessary to prevent movement between independently supported steel members.

Prior to coupling installation, the installer must thoroughly familiarize himself with all of the manufacturer's published requirements of the motor, speed reducer, and couplings. Field breakdown and checking of alignment during assembly to the support structure shall be accomplished using dial indicators, machine test levels, or other means, with only commercial shim stock used for final alignment. Three types of alignment must be checked: (1) Angular; (2) Parallel; (3) Axial.

www.CEMANET.org Does not allow this document to be copied. Downloaded on Apr 24, 2017 to Pattarapon Sritrakool. Copyright CEMA. All rights reserved.

Angular Alignment

Angular alignment is defined as the movement of the input and output halves of the coupling in such a manner as to permit a rocking and/or sliding action of the element that connects the coupling halves. See figure D.7.

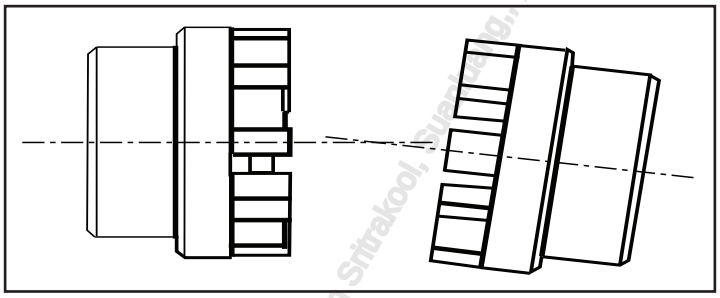

Figure D.7
Coupling angular alignment

After the coupling halves have been mounted to the driver and driven shafts, the two units should be positioned so that the distance between the coupling faces is equal to the "normal" coupling gap.

The coupling halves are then aligned by positioning a spacer block of thickness equal to the required gap between the faces. The spacer block should check gap at a minimum of 90 degree intervals. Once this is accomplished, the gap should be measured with a feeler gauge.

Parallel Alignment

Parallel Alignment is defined as the movement of the input and output halves of the coupling in a way that maintains parallelism between the faces of each coupling half but allows the shafts to occupy separate center lines. The driving and driven equipment should be aligned so that a straight edge can be placed on both coupling flanges at 90 degree intervals and remain parallel to the equipment shafts. Care should be taken when tightening set screws and bolts to insure the proper torque is achieved.

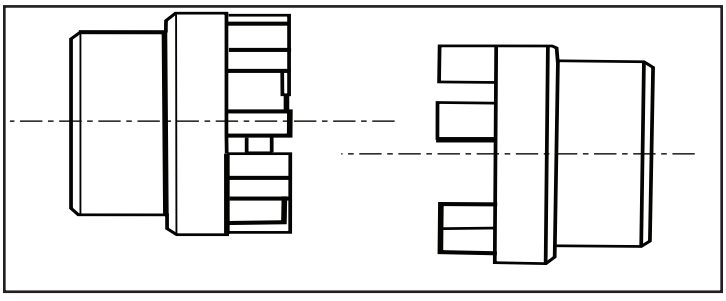

Figure D.8
Coupling parallel alignment

Axial Alignment

End float for both the driving and driven shafts is sometimes required for expansion and various other reasons. End float on most couplings can be limited to any required distance by the use of limited end float kits; however, these kits should only be used as recommended by the manufacturer.

WWW.CEMANET.ORG has issued this document (14504) on April 25, 2011 to Pattarapom Sritrakool, Suranaree U. of T., Thailand

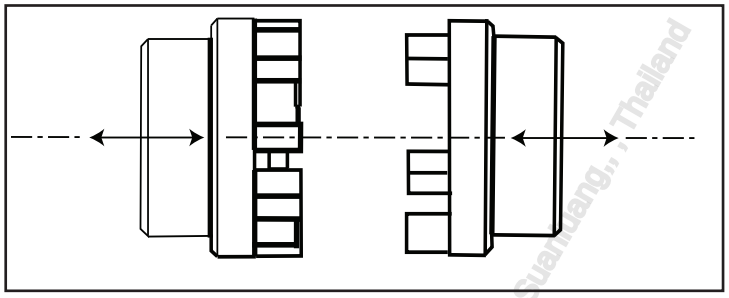

Figure D.9
Coupling axial alignment

After the couplings have been aligned (cold) and the drive run in to obtain normal operating temperature, it shall be shut down and alignment re-checked using the following procedure:

Break all couplings and re-check "hot" alignment. These readings shall not exceed 75 percent of the manufacturer's maximum allowable tolerances. If they are not within these limits, the procedure should be repeated as often as needed to achieve necessary "hot" readings.

IDLER ALIGNMENT

The objective in aligning idlers is to achieve settings which are square and in line to the conveyor centerline and parallel to each other, as shown in Figure D.3.

Idlers shall be set from a previously squared and leveled terminal pulley (preferably the discharge pulley, although this is not essential). The suggested method is to use laser alignment techniques to establish a datum line. Alternately, use a tight wire on the conveyor centerline, or offset to it, stretched to form a true centerline reference. This line should be at least 100 feet (30 m) long and referenced to the squared starting pulley.

Idlers shall be placed at design spacing and square to the tight wire. After a span of about 50 feet (15 m) has been filled with idlers, the 100-foot (30 m) line shall be relocated so that there is a 50-foot (15 m) overlap on the first position. Repositioning of the laser or tight wire should continue until the entire conveyor length is filled with idlers.

BELT ALIGNMENT

Belt training is usually minimized if:

- Conveyor has been installed straight and level with tolerances stated herein
- All pulleys and idlers are square with the conveyor centerline
- Belt splices are correct and square
- There are no defects in the conveyor belting
- All idler rolls turn freely

However, all these conditions are rarely present concurrently, and some training of the belt is usually required.

Note:
Belt training should be supervised by one person to insure consistency in adjustments.

Downloaded from Digital Engineering Library @ McGraw-Hill (www.digitalengineeringlibrary.com)
Copyright © 2004 The McGraw-Hill Companies. All rights reserved.
Any use is subject to the Terms of Use as given at the website.

Training the belt is a process of adjusting idlers and the method of loading in a manner that will correct any tendency of the belt to run off to one side or the other.

When the belt continues to run off consistently over a fixed length of conveyor, the cause is probably in the alignment or leveling of the conveyor structures, idlers, or pulleys in that area.

If one or more segments of the belt run off at all points along the conveyor, the cause is more likely the belt itself, a splice, or the method of loading. When a belt is loaded off center, the lightly loaded edge will rise on the inclined idler roll that it contacts.

Training the belt with the troughing idlers is accomplished by shifting the idler axis with respect to the path of the belt, commonly known as knocking idlers. This method is effective when the entire belt runs to one side along a fixed length of the conveyor. The belt can be centered by knocking ahead (in the direction of belt travel) the end of the idler to which the belt runs. See Figure D.10.

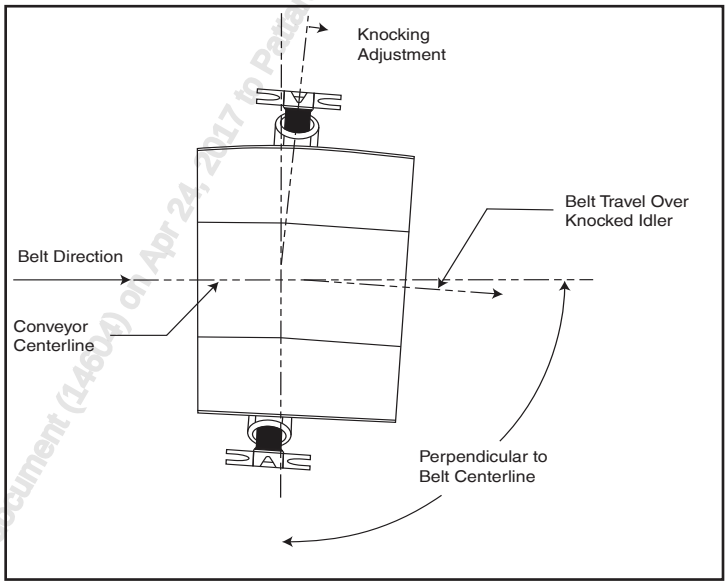

Figure D.10
Correcting belt alignment

Shifting idlers in this manner should be spread over a length of conveyor preceding the region of trouble. In no event shall any idler be shifted more than 1/4 inch (6 mm) in any direction from its squared position.

Note:
Compensation by idler knocking may have adverse effects on reversible belts; therefore, avoid knocking on reversible belts. Instead, use extreme care in initial alignment.

A belt might be made to run straight with half the idlers knocked one way and half the other, but this would increase rolling friction between the belt and idlers. For this reason, all idlers must be initially squared with the path of the belt in accordance with the Idler Alignment section of this standard, and minimum shifting should be used for training. If the belt is over-corrected by shifting idlers, it should be restored by moving the knocked idlers, not by shifting additional idlers in the other direction.

www.CEMANET.ORG was issued this document (1460) on Apr 24, 2017 to Portageport Stocked, Suabedg., , Midland

Empty Run-In

The conveyor belt should first be aligned (trained) without material load. Most alignment problems, with the exception of off-center loading, will be detected during this empty run-in period.

After ensuring that all elements have been aligned true as stipulated in the Idler Alignment section of this standard, the belt should be slowly inched along to provide indication of where corrections of the types described may be required. The first corrections must be those at points where the belt is in danger of being damaged. Once the belt is clear of all danger points, a sequence of training operations can be followed.

The best procedure to use in the training sequence is to start with the return run and work toward the tail pulley. This ensures early centering of the belt on the tail pulley so that it can be centrally loaded. Normally the belt can be trained properly onto the tail pulley by manipulation of the return idlers.

With the empty belt trained satisfactorily, good operation with load is usually assured. Disturbances that appear with load are then usually due to off-center loading or to accumulation of material on snub pulleys and return idlers.

If all corrective measures have been applied, and a particular section of belt continues to run to one side along the entire conveyor length, it can be concluded that the belt may be cambered at that point or may have a splice that is not properly squared. The only corrective measure for a non-squared splice is to re-splice. On the other hand, slight camber in a belt may remove itself after an adequate run-in period under load.

Full Load Run-In

A belt may be considered properly aligned if after eight hours of continuous operation under full design load, the belt edges remain within the width of the pulley face. Also, when extra wide face pulleys are used, a further criterion that the belt runs within the confines of the normal troughing, or return, idler should be followed.

Note:
Disc return idlers shall be exempt from the above as the standard roll faces supplied are approximately equal to the belt width. In this case, the belt shall be made to track within 1-1/2 inches (38 mm) of the conveyor centerline. Idler brackets shall not restrict this movement.

To obtain the above alignment under load, it will be necessary to ensure that the load is centered and that all belt scrapers, plows, and skirt seals exert uniform pressure on the belt. Minor adjustments can be made to these devices to improve tracking.

Carrying and return training idlers should be considered in correcting belt alignment problems before rejecting the belting or splice.

Helpful Hints:

- One person should be responsible for training belts. This person should supervise all adjustments.
- Periodically check the conveyor to be sure it is level. This requirement is apparent if the conveyor becomes misaligned with no apparent change in loading.
- After the belt is run in, an electrician should take readings on voltage, amperes, or wattage.

www.CEMANET.ORG has issued this document (14604) on 4/12/2017 to Pattarapom Chaikul, Suan Dusit University Thailand

This information can be used for future comparison and a quick trouble check. (Higher readings in the future may indicate excessive drag due to belt misalignment or frozen belt idler rolls.)

- Do not overtrain the belt. Overtraining will result in increased belt cover wear and increased power consumption.

www.BNNT.ORG is issued to Pattamaporn Chaeon Sukhang, , Thailand on Apr 7, 2017 to Patthamaporn Chaeon Sukhang, , Thailand

SKIRTBOARD ADJUSTMENT

Skirtboards are an important element of a well designed belt conveyor. They help centralize and shape the load while minimizing spillage over the belt edges and helping to contain dust.

The steel plates that form the skirting (and any chute lining) should be installed high enough to avoid the risk of contact with the belt, yet low enough to protect the rubber or urethane sealing strips from excessive load pressure and material wear. The cross-sectional area of the chute should be checked carefully to make certain that the skirting and liner do not interfere with flow. It is critical that these steel plates be installed as a smooth, seamless layer that opens in the direction of belt travel, to minimize material entrapment and the risk of belt damage. Typical dimensions for clearance above the belt start at 3/8 to 1/ 2 inch (9.5 to 12.7 mm) above the belt at the tail and open to 3/4 to 1 inch (19 to 25 mm) at the exit of the load zone.

Affixed to the bottom of the steel is the skirtboard sealing system, which provides a light, flexible contact with the conveyor belt. This low sealing pressure will minimize friction while retaining all material within its boundaries. Excessive pressure will burn grooves in the belt rubber cover and, therefore, must be avoided. Excessive adjustment or downward pressure of the skirtboard seal can lead to accelerated wear of the sealing strip, and/or belt.

The maintenance of a flat and stable belt line in the loading zone is a key to effective sealing. Efforts taken to avoid fluctuations in the belt line, including closely spaced idlers, belt support cradles, and spiral-wrapping of wing pulleys have generally proven helpful in controlling fugitive material.

IDLER LUBRICATION

Modern conveyor idlers have evolved through better bearings, improved lubricants, and more effective seals. Likewise, the lubrication requirements have changed to accommodate current designs. The following considerations should be reviewed when establishing a lubrication program tailored to a particular installation:

Manufacturer's Recommendation

The manufacturer's data can provide a solid basis for designing the lubrication program.

Type Of Lubricant

The proper lubricant will be heavily influenced by operating conditions, the operating environment, and the quality of maintenance program desired. Operating conditions such as operating speed, idler loading, type and size of material being handled, and number of operating hours per year should be considered.

The operating environment is one of the greatest contributors in determining the lubrication program. Temperature, dust, material abrasiveness, wash down techniques, and wash down frequency all affect the lubrication that flushes contaminants from the bearings. Special synthetic lubricants are available for subzero operating temperatures.

Idler Construction

The type and efficiency of the seals directly reflect on the lubrication schedule. Following are several recommendations that will contribute to establishing a successful lubrication program:

- Remove several idlers from service every six months, disassemble them, and inspect to determine if adequate lubrication has been attained, if migratory contamination and wear have occurred, or if pressure relief plugs are fouled. If these idlers demonstrate that adequate lubrication has been attained, they could be put back into service and the conveyor operated as normal. If contamination was found in this sampling, all idlers on the conveyor should be lubricated. Also, fouling of pressure relief plugs in sampling should encourage cleaning of all plugs.
- Thoroughly clean all grease fittings prior to lubricating the idlers to eliminate the possibility of contamination introduced during maintenance.
- Establish a good maintenance record keeping system. Record the date on which samples were taken and the condition of the samples taken and verify trends that may be occurring within the system. Also record idler failures, including location, to establish system trends and effectiveness of the lubrication program. The establishment of a formal lubrication program as described above will increase the likelihood of many years of successful, trouble-free operation.

SAFETY

Adjustments

Conveyors, by design, often have significant potential sources of stored energy. Take-ups and inclined (or declined) belts loaded with bulk material are two common hazards. It is important that ANSI lockout procedures be followed when making adjustments to bring conveyor machinery into tolerance (ref: ASME B15.1), B20.1, and ANSI Z244.1).

Adjusting rotating or moving components should be avoided. Only trained and authorized personnel, who are aware of the hazards, should be allowed to make such adjustments.

Safety Labels

CEMA Safety Labels and Placement Guidelines were developed by the CEMA Safety Committee to provide, for members and non-members, consensus advice for the selection and application of safety labels for use on conveyors and related material handling equipment to assist in accident prevention.

Prior to operating the conveyor or any of the associated accessories or equipment all safety markings, guards and warnings must be in place in accordance with governmental regulations and site specific requirements.

Note:
Should any of the safety labels supplied by the equipment manufacturer become unreadable for any reason the equipment user is then responsible for the replacement and location of these safety labels. Replacement labels can be obtained from your equipment supplier or CEMA.

CEMA Label Placement Guideline BH-1 is intended for bulk material handling conveyors. The entire CEMA Safety Label Program is detailed in CEMA Brochure 201 - Safety Label Brochure which is available from CEMA.

WWW.CEMANET.ORG has issued this document (2004) on Sept 22, 2017 to Pattabiram, skrkool, engineer, skrkool

FORWARD

This appendix provides a proposed procedure for determining the A_i' component of the resistance to rotation of a single belt conveyor idler roll. The procedure is intended to provide a way of gathering data on a uniform basis between various manufacturers to be used for conveyor power calculations.

1.0 SCOPE

This proposed CEMA Standard applies to the laboratory measurement of the A_i' component of the resistance to rotation of 'dead' or non-rotating (static) shaft belt conveyor idler rolls commonly used for the transport of bulk materials. This proposed standard test procedure applies to the steady state operation of rolls that have been run-in and is a statistical average in nature. The aim of this proposed standard is to determine an accurate average value for the resistance to rotation (excluding bearing resistance to rotation due to load) of the large quantity of idler rolls used in any belt conveyor, for power and belt tension calculation purposes.

2.0 REFERENCES

The following publications form a part of the specification to the extent specified herein. Unless otherwise indicated, the latest revision of CEMA publications shall apply.

- CEMA Publication Belt Conveyors for Bulk Materials, 6th edition and lower
- CEMA Publication Belt Conveyors for Bulk Materials, 7th edition and higher.
- CEMA Standard No. 502 Bulk Material Belt Conveyor Troughing and Return Idlers.

3.0 DEFINITIONS

The following definitions apply wherever the terms and expressions are used in this document.

3.1 Resistance to Rotation

The resistance to rotation of an idler roll is the torque or moment required to rotate the idler roll around a stationary shaft. It is calculated as the scalar sum of all contact forces tangent to the test surface and parallel to the circumference generated by a point on the test surface as it rotates, times the distance from the tangential force reaction to the centerline of the idler bearings.

3.2 K_x

The K_x value is the total resistance to rotation of both the carrying and return idlers, in pounds per foot (kilogram per meter) of conveyor length, as defined in the CEMA Publication Belt Conveyors for Bulk Materials, 5th edition. The text from the 5th edition is included for reference in the 7th edition It includes the resistance of the bearings to rotation due to load on the rolls.

3.3 A_i

The A_i value is the component of the total resistance to rotation in lbs of the 3 rolls of a standard troughing idler and a portion of the return roll (due to longer spacings) that is attributed to the resistance to turning due to the effects of all seals including any bearing seals, grease, including grease within the bearing, etc. (all resistance to rotation that can not be attributed to the bearing resistance to rotation due to load). It is used in the calculation of K_x, in pounds per foot (kilogram per meter) of conveyor length, as defined in the CEMA Publication Belt Conveyors for Bulk Materials, 5th edition and lower.

www.CEMAORG.ORG has issued this document (1460) on Apr 27 2017 to Pattarapom Siritikom Siriwang, , , (Head)

3.4 A_i'
The A_i' value is the component of the total resistance to rotation of a single roll, that is attributed to the resistance to turning due to the effects of all seals including any bearing seals, grease, including grease within the bearing, etc. All resistance to rotation that can not be attributed to the bearing resistance to rotation due to load. It is used in the calculation of K_x, as defined in the CEMA Publication Belt Conveyors for Bulk Materials 5th edition.

3.5 Test Speed
The test speed is the standard CEMA speed in revolutions per minute (rpm) as provided in the load ratings for CEMA Standard Idlers. This is 500 rpm for all CEMA Series. Reference CEMA Standard 502, Bulk Material Belt Conveyor Troughing and Return Idlers.

3.6 Ambient Temperature
The term ambient temperature refers to the temperature of the air surrounding the test roll(s) during an A_i' test. The ambient temperature is to be 75 °F ± 10° (24 °C ± 5°)

3.7 Basic Test
The basic test is performed at the basic test speed, at ambient temperature and in accordance with all other requirements of this proposed standard.

4.0 TEST EQUIPMENT
It is not the purpose of this proposed standard to detail the test equipment used. The test equipment shall be suitable to accurately measure the resistance to rotation of an unloaded idler roll(s) during a basic test within ±10%.

4.1 Test Methods
This proposed standard is intended to define the elements important to accurate and consistent measurement. Test machines will vary but there are two general methods with various sub-types that are considered acceptable. It includes the following two basic test method types each with sub-types:

4.2 Rotating Shell/Static Shaft: Method Types A
In the Rotating Shell/Static Shaft method Types A, the shaft is stationary and the shell is rotated. This method most accurately replicates normal lubricant flow and rotation of the bearing rolling elements. However, the parasitic losses are significant and need to be accurately measured and subtracted from the measure value.

4.2.1 Method Type A-1
Measures the reaction moment at the idler shaft using a force sensor or gauge and the result is converted mathematically to an A_i' value.

4.2.2 Method Type A-2
Measures the reaction moment at the idler shaft using a reaction torque sensor or gauge and the result is converted mathematically to an Ai' value.

4.2.3 Method Type A-3
Measures the input torque to the test machine by various methods and the result is converted mathematically to an A_i' value. 4.1.2

www.CEMANET.ORG has a license to distribute this document (14604) to Apr 24, 2017 to Pattaratorn Sritrakool Chanluang, , , ,

4.3 Rotating Shaft/Static Shell: Method Types B

In the Rotating Shaft/Static Shell method Types B, the shaft is rotated and the shell is held stationary. This method does not accurately replicate normal lubricant flow and rotation of the bearing rolling elements. However, the parasitic losses are not very significant and in most cases can be ignored. This method's overall accuracy is thus comparable to the Type A methods.

4.3.1 Method Type B-1

Measures the torque to turn the shaft using a rotary torque sensor or gauge and the result is converted mathematically to an A_i' value.

4.3.2 Method Type B-2

Measures the reaction force at the shell using a force type load cell or gauge and the result is converted mathematically to an A_i' value.

4.1.3 Method Type B-3

Measures the reaction moment at the shell using a reaction torque sensor or gauge and the result is converted mathematically to an A_i' value.

4.4 Multiple Roll Tests

To reduce the time and effort required for a complete test, multiple rolls may be tested at one time, where the test method type and test machine design allows. The A_i' value for such a test will be the total resistance to rotation divided by the number of rolls in the basic test (i.e. a simple average).

4.5 Alignment and Load Control

All roll alignments and load control during testing must be maintained so there is little or no effect on the measurement of the resistance to rotation. These test parameters are typically:

- Near zero axial load on roll.
- Near zero normal load on roll.
- Near zero roll inclination angle.

4.6 Instrumentation

The instrumentation used for readout, recording and if applicable, mathematical manipulation of test data, must be sufficiently accurate and precise as to provide rolling resistance measurements within ±10%.

5.0 TEST ROLL CONDITION

5.1 New Roll

The roll to be tested must be in new condition. That is, either fresh off the production floor or from the warehouse. If the roll is from warehouse stock, then the roll is to have been in stock less than 1 year.

5.2 Roll Dimensions

The roll may be any diameter, length, or type that falls within CEMA Standard No 502 , Bulk Material Belt Conveyor Troughing and Return Idlers

www.CEMA.org. Reproduction of this document is prohibited. Downloaded on Apr 21 2017 to pacharapom Sirakool, Suaduang, , Thailand

5.3 TIR
For test methods Type A, the run-out of the test roll at the point of rotating load support must be with 0.015 inch (0.4 mm) Total Indicated Run Out (TIR). This is not necessary where the Type A Method employs a data acquisition system that has the proven ability to mathematically compensate for roll TIR problems. This is not necessary for Type B methods where the shell is held stationary.

5.4 Lubrication
All re-greaseable type rolls shall be properly greased with fresh grease before run-in. This means rolls fresh from the production line and already properly greased may be run-in directly. Rolls from stock, which are over 3 months old or if there is any question of the date of their production, are to be fully purged and properly re-greased with fresh grease. Section 5.4 doesn't apply to sealed for life products.

5.5 Run In
The roll is to be run in at 500 rpm ±10 rpm, for 100 hours ± 10 hours, without load and in an ambient temperature of 75°F ± 20° (24°C ± 10°).

5.6 Stabilization
After run-in, the roll is to have a thermal soak of at least 12 hours in the thermal environment of the test location prior to the test being performed to achieve thermal equilibrium.

5.7 Test Start Time
If run-in is done within the thermal environment of the A_i' test, the test may proceed directly (within 30 minutes).

5.8 Test Window
Run-in rolls may be tested up to 1 month after run-in.

5.9 Delays
If there is more than a 30 minute delay between run-in and test, the run-in roll is to be run for 30 minutes just prior to the Ai' test being performed on it.

5.10 Rework
Note: Any roll rework or other corrective action required should be undertaken before testing and with care not to change the run-in characteristics of the roll.

6.0 TEST PROCEDURES
The Basic Test will consist of the following 4 phases in sequence:

6.1 Initial Test Set-up
6.1.1 Warm-up
Appropriately warm-up the test machine and all instrumentation.

6.1.2 Zero Settings
Zero all instrumentation and/or record all instrumentation offsets.

www.CEMA-ET.ORG has issued this document (14604) on Apr 24, 2014 to Patarapom Sritabon (pat@luang, ...

6.1.3 Test Machine Calibration

Determine all parasitic losses of the test machine. Measurement of parasitic loss(es) is very important and can be determined by different techniques depending on the equipment used.

6.2 Gross Resistance Measurement

After running for 5 minutes measure resistance to rotation of the roll(s).

6.3 Check Validity

6.3.1 Confirm Calibration

Check for changes in the zero or instrumentation offset.

6.3.2 Confirm Zero Settings

Determine that the total parasitic losses have not changed from 6.1.3.

6.3.3 Determine Validity

From personal observation and the results of 6.1 & 6.2 above, determine if the test is a valid one.

6.4 Data Manipulation

6.4.1 Data Validity

Various types of machines and their instrumentation will have different methods by which the data must be manipulated to arrive at the A_i' test value. The method must be a scientifically valid one.

6.4.2 Instrumentation Offsets

Make certain that the effect of all instrumentation offsets have been taken into account in reducing/increasing the gross rotating resistance measured.

6.4.3 Confirm Calibration

Also, make certain that all significant parasitic losses have been accurately determined and are subtracted from the gross rotating resistance measured in 6.1 after instrumentation offsets have been taken into account.

6.4.4 Multiple Rolls

If multiple rolls are tested divide the net resistance to rotation by the number of rolls in the basic test to get the A_i' test result for the basic test.

6.4.5 Adjusting for Other Diameter Rolls

A_i' results at the test diameter shall be adjusted for the other standard CEMA roll diameter(s) by assuming the rolling resistance is inversely proportional to the roll diameter. The test value shall be adjusted by the following equation:

$$A'_{i(other)} = A'_{i(test)} \times \frac{D_{r(test)}}{D_{r(other)}}$$

Equation E.1

A'_i, Method for adjusting for other roll diameters

WWW.CEMANET.ORG | This is a specific document (E004) on 10/24, 2017 to Natarapol Sritrakool, Suanluang , Thailand

Where:

$D_{r(test)}$ = Diamter of the roll tested
$D_{r(other)}$ = Diamter of roll other than that tested

6.5 Complete Test

A complete test will involve statistically significant quantities of rolls, minimum of 20. Any combination of roll diameters, lengths, and roll types may be used towards a complete statistical test. However, all rolls must have the same construction details that would affect the A_i' value. Obviously, all results must be referred to one diameter for the statistical average being tested for.

A complete test will produce one result, a single A_i' value. This value will be the average of all the resistance to rotation measurements for all basic tests completed.

Where multiple rolls are tested in a single basic test, the result is an average. The test results for each of these multiple roll tests may simply be averaged to arrive at a complete test average, the single A_i' value.

7. REPORTING

As a minimum the report shall consist of the following:

7.1 Roll Identification

The following information for the identification of each complete test should be recorded, if applicable:

- Manufacturer and/or Supplier.
- Brand name and/or Trade Name and/or Roll Series.
- CEMA Class.
- Roll Type(s) (steel, rubber disc, rubber tire, etc.).
- Roll(s) diameter(s) tested.
- Grease details.
- Standard construction details.
- Any special construction details (ex. with splash guard, weather shield, stone guard, etc.).

7.2 Test Results

The following complete test information shall be reported:

- A_i' at the CEMA diameter tested.
- A_i' at all standard CEMA diameters for the Class of roll.
- Test method type.
- Any special test details (ex. multiple roll tests, number of rolls per test, etc.).
- Test month and year.

8. ROLL STATUS AFTER TESTING

Tested rolls are to be considered still in new condition and may be returned to stock.

www.JANET.RS has granted this document (1960) on Apr 24, 2017 to Pattaraporn Sukkoon, Siam Eng., , Thailand

FOREWORD

This appendix provides a proposed procedure for determining the K_{is}' component of the resistance to rotation of a single belt conveyor idler roll. The procedure is intended to provide a way of gathering data on a uniform basis between various manufacturers to be used for conveyor power calculations.

INTRODUCTION

The K_x value is the total resistance to rotation of both the carrying and return idlers, in pounds per foot (kilograms per meter) of conveyor length, as defined in the CEMA Publication Belt Conveyors for Bulk Materials, 5th edition. The text from the 5th edition is included for reference in the 7th edition as Appendix C. It includes the resistance of the bearings to rotation due to load on the rolls. Kx combined the frictional resistance of the idlers and the sliding resistance between the belt and idler rolls.

A_i is used in the 5th edition as the component of the total resistance to rotation in lbs of the 3 rolls of a standard troughing idler and a portion of the return roll (due to longer spacings) that is attributed to the resistance to turning due to the effects of all seals including any bearing seals, grease, including grease within the bearing, etc. In other words, all the resistance to rotation that can not be attributed to the bearing resistance to rotation due to load. A_i is used in the calculation of K_x, in pounds per foot (kilograms per meter) of conveyor length, as defined in the CEMA Publication Belt Conveyors for Bulk Materials, 5th edition and lower.

Combining load dependent rotational resistances and load independent resistances in one factor, K_x, results in a level of calculation precision that is less than satisfactory for many applications. In the 6th edition of Belt Conveyors for Bulk Materials the rotational resistance is broken down into key components that can be evaluated independently. In the 6th edition the Universal Method for calculating conveyor power requirements the component K_{is} [in × lbf (mm × kgf)] is the seal torsional resistance per roll at 500 rpm at a defined operating temperature. Kis' is the average value of K_{is} obtained from testing a representative sample of idlers following the K_{is}' test method.

1.0 SCOPE

This proposed CEMA Standard applies to the laboratory measurement of the K_{is}' component of the resistance to rotation of 'dead' or non-rotating (static) shaft belt conveyor idler rolls commonly used for the transport of bulk materials. This proposed standard test procedure applies to the steady state operation of rolls that have been run-in and is a statistical average in nature. The aim of this proposed standard is to determine an accurate average value for the resistance to rotation at a defined rpm (excluding bearing resistance to rotation due to load) of the large quantity of idler rolls used in any belt conveyor, for power and belt tension calculation purposes.

2.0 REFERENCES

2.1 Applicable Publications

The following publications form a part of the specification to the extent specified herein. Unless otherwise indicated, the latest revision of CEMA publications shall apply.

- CEMA Publication Belt Conveyors for Bulk Materials, 6th edition and lower.
- CEMA Publication Belt Conveyors for Bulk Materials, 7th edition and higher.
- CEMA Standard No. 502 Bulk Material Belt Conveyor Troughing and Return Idlers.

www.CEMANET.org: this is a controlled document (1450) on Apr 24, 2014 for Personal Use Only. Shandong Shuangjian Heavy Industry Machinery Co., Ltd.

3.0 DEFINITIONS

The following definitions apply wherever the terms and expressions are used in this document:

3.1 RESISTANCE TO ROTATION

The resistance to rotation of an idler roll is the torque or moment required to rotate the idler roll around a stationary shaft. It is calculated as the scalar sum of all contact forces tangent to the test surface and parallel to the circumference generated by a point on the test surface as it rotates, times the distance from the tangential force reaction to the centerline of the idler bearings. This resistance is expressed in Chapter 6 of the 7th edition as a change in tension, ΔT_{is}. To calculate ΔT_{is} it is necessary to obtain a value for the factor, K_{is} that is representative of the idlers to be used on the conveyor.

3.2 Test Speed

The test speed is the standard CEMA speed in revolutions per minute (rpm) as provided in the load ratings for CEMA Standard Idlers. This is 500 rpm for all CEMA Series. Reference CEMA Standard 502 Bulk Material Belt Conveyor Troughing and Return Idlers.

3.3 Ambient Temperature

The term ambient temperature refers to the temperature of the air surrounding the test roll(s) during a K_{is}' test. The ambient temperature is to be 75 °F ±10° (24 °C ±5°).

3.4 Basic Test

The basic test is performed at the basic test speed, at ambient temperature and in accordance with all other requirements of this proposed standard.

4.0 TEST EQUIPMENT

It is not the purpose of this proposed standard to detail the test equipment used. The test equipment shall be suitable to accurately measure the resistance to rotation of an unloaded idler roll(s) during a basic test within ±10%.

4.1 Test Methods

This proposed standard is intended to define the elements important to accurate and consistent measurement. Test machines will vary but there are two general methods with various sub-types that are considered acceptable. It includes the following two basic test method types each with sub-types:

4.2 Rotating Shell/Static Shaft: Method Types A

In the Rotating Shell/Static Shaft method Types A, the shaft is stationary and the shell is rotated. This method most accurately replicates normal lubricant flow and rotation of the bearing rolling elements. However, the parasitic losses are significant and need to be accurately measured and subtracted from the measure value.

4.2.1 Method Type A-1

Measures the reaction moment at the idler shaft using a force sensor or gauge and the result is converted mathematically to a K_{is}' value.

4.2.2 Method Type A-2

Measures the reaction moment at the idler shaft using a reaction torque sensor or gauge and the result is converted mathematically to a K_{is}' value.

www.CEMAstandards.com (Includes this document) (14604) 10 Apr 24, 2024 to Pattaraporn Sritrakool (Thailand) Thailand

4.2.3 Method Type A-3

Measures the input torque to the test machine by various methods and the result is converted mathematically to a K_{is}' value.

4.3 Rotating Shaft/Static Shell: Method Types B

In the Rotating Shaft/Static Shell method Types B, the shaft is rotated and the shell is held stationary. this method does not accurately replicate normal lubricant flow and rotation of the bearing rolling elements. However, the parasitic losses are not very significant and in most cases can be ignored. This method's overall accuracy is thus comparable to the Type A methods.

4.3.1 Method Type B-1

Measures the torque to turn the shaft using a rotary torque sensor or gauge and the result are converted mathematically to a K_{is}' value.

4.3.2 Method Type B-2

Measures the reaction force at the shell using a force type load cell or gauge and the result is converted mathematically to a K_{is}' value.

4.3.3 Method Type B-3

Measures the reaction moment at the shell using a reaction torque sensor or gauge and the result is converted mathematically to a K_{is}' value.

4.4 Multiple Roll Tests

To reduce the time and effort required for a complete test, multiple rolls may be tested at one time, where the test method type and test machine design allows. The K_{is}' value for such a test will be the total resistance to rotation divided by the number of rolls in the basic test (i.e. a simple average).

4.5 Alignment and Load Control

All roll alignments and load control during testing must be maintained so there is little or no effect on the measurement of the resistance to rotation. These test parameters are typically:

- Near zero axial load on roll.
- Near zero normal load on roll.
- Near zero roll inclination angle.

4.6 Instrumentation

The instrumentation used for readout, recording and if applicable, mathematical manipulation of test data, must be sufficiently accurate and precise as to provide rolling resistance measurements within ±10%.

5.0 TEST ROLL CONDITION

5.1 New Roll

The roll to be tested must be in new condition. That is, either fresh off the production floor or from the warehouse. If the roll is from warehouse stock, then the roll is to have been in stock less than 1 year.

5.2 Roll Dimensions

The roll may be any diameter, length, or type that falls within CEMA Standard No 502 Bulk Material Belt Conveyor Troughing and Return Idlers.

www.CEMANET.org Document issued to [illegible] on Apr 24, 2017 to Patcharaporn Sritrakool, Suksakarn, Thailand

5.3 TIR
For test methods Type A, the run-out of the test roll at the point of rotating load support must be with 0.015 inch (0.4 mm) Total Indicated Run Out (TIR). This is not necessary where the Type A Method employs a data acquisition system that has the proven ability to mathematically compensate for roll TIR problems. This is not necessary for Type B methods where the shell is held stationary.

5.4 Lubrication
All re-greaseable type rolls shall be properly greased with fresh grease before run-in. This means rolls fresh from the production line and already properly greased maybe run-in directly. Rolls from stock, which are over 3 months old or if there is any question of the date of their production, are to be fully purged and properly re-greased with fresh grease. Section 6.4 doesn't apply to sealed for life products.

5.5 Run In
The roll is to be run in at 500 rpm +/- 10 rpm, for 100 hours +/- 10 hours, without load and in an ambient temperature of 75°F+/-20° (24 °C+/-10°).

5.6 Stabilization
After run-in, the roll is to have a thermal soak of at least 12 hours in the thermal environment of the test location prior to the test being performed to achieve thermal equilibrium.

5.7 Test Start Time
If run-in is done within the thermal environment of the K_{is}' test, the test may proceed directly (within 30 minutes).

5.8 Test Window
Run-in rolls may be tested up to 1 month after run-in.

5.9 Delays
If there is more than a 30 minute delay between run-in and test, the run-in roll is to be run for 30 minutes just prior to the K_{is}' test being performed on it.

5.10 Rework
Note: Any roll rework or other corrective action required should be undertaken before testing and with care not to change the run-in characteristics of the roll.

6.0 TEST PROCEDURES
The Basic Test will consist of the following 4 phases in sequence:

6.1 Initial Test Set-up

6.1.1 Warm-up
Appropriately warm-up the test machine and all instrumentation.

6.1.2 Zero Settings
Zero all instrumentation and/or record all instrumentation offsets.

www.CEMAT.ORG has issued this document (14604) on Apr 24, 2014 to Pattarapom Sritrabok, Siddhiang, , Thailand

6.1.3 Test Machine Calibration

Determine all parasitic losses of the test machine. Measurement of parasitic loss(es) is very important and can be determined by different techniques depending on the equipment used.

6.2 Gross Resistance Measurement

After running for 5 minutes measure resistance to rotation of the roll(s).

6.3 Check Validity:

6.3.1 Confirm Calibration

Check for changes in the zero or instrumentation offset.

6.3.2 Confirm Zero Settings

Determine that the total parasitic losses have not changed from 6.1.1.3.

6.3.3 Determine Validity

From personal observation and the results of 6.1 & 6.2 above determine if the test valid.

6.4 Data Manipulation:

6.4.1 Data Validity

Various types of machines and their instrumentation will have different methods by which the data must be manipulated to arrive at the K_{is}' test value. The method must be a scientifically valid one.

6.4.2 Instrumentation Offsets

Make certain that the effect of all instrumentation offsets have been taken into account in reducing/increasing the gross rotating resistance measured.

6.4.3 Confirm Calibration

Also, make certain that all significant parasitic losses have been accurately determined and are subtracted from the gross rotating resistance measured in 6.1 after instrumentation offsets have been taken into account.

6.4.4 Multiple Rolls

If multiple rolls are tested divide the net resistance to rotation by the number of rolls in the basic test to get the K_{is}' test result for the basic test.

6.4.5 Adjusting for Other Roll Diameters

K_{is}' results at the test diameter shall be adjusted for the other standard CEMA roll diameter(s) by assuming the rolling resistance is inversely proportional to the roll diameter. The test value shall be adjusted by the following equation:

$$K'_{is(other)} = K'_{is(test)} \times \frac{D_{r(test)}}{D_{r(other)}}$$

Equation F.1

K'_{is}, Method for adjusting for other roll diameters

WWW.CEMANET.ORG This is issued to: [illegible] (3460-4) on Apr 24, 2017 to Pattarapon Sritrakool, Suanluang , , Thailand

Where:

$D_{r(test)}$ = Diamter of the roll tested
$D_{r(other)}$ = Diamter of roll other than that tested

6.5 Complete Test.

A complete test will involve statistically significant quantities of rolls, minimum of 20. Any combination of roll diameters, lengths, and roll types may be used towards a complete statistical test. However, all rolls must have the same construction details that would affect the K_{is}' value. Obviously, all results must be referred to one diameter for the statistical average being tested for.

A complete test will produce one result, a single K_{is}' value. This value will be the average of all the resistance to rotation measurements for all basic tests completed.

Where multiple rolls are tested in a single basic test, the result is an average. The test results for each of these multiple roll tests may simply be averaged to arrive at a complete test average, the single K_{is}' value.

7.0 REPORTING

As a minimum the report shall consist of the following:

7.1 Roll Identification

The following information for the identification of each complete test should be recorded, if applicable:

- Manufacturer and/or Supplier.
- Brand name and/or Trade Name and/or Roll Series.
- CEMA Class.
- Roll Type(s) (steel, rubber disc, rubber tire, etc.).
- Roll(s) diameter(s) tested.
- Grease details.
- Standard construction details.
- Any special construction details (ex. with splash guard, weather shield, stone guard, etc.).

7.2 Test Results

- The following complete test information shall be reported:
- K_{is}'[test] at the CEMA diameters tested.
- K_{is}'[other] at all standard CEMA diameters for the Class of roll tested.
- Test method type.
- Any special test details (ex. multiple roll tests, number of rolls per test, etc.)
- Test month and year.

8.0 ROLL STATUS AFTER TESTING

TESTED ROLLS ARE TO BE CONSIDERED STILL IN NEW CONDITION AND MAY BE RETURNED TO STOCK.

www.CEMANET.org has issued this document (4.0) on Apr 21, 2017 to Kubtrapol Chitrakon, Suvarnabhumi, , Thailand

INTRODUCTION

The reader is encouraged to read all the information regarding the term that is being searched as the art of conveyor deisgn is iterative and almost every component selection and calculation is interelated or interdependent.
Other CEMA documents such as CEMA 550, Characteristics of Bulk Materials, and ANSI/CEMA 102, Conveyor Terms and Definitions, as well as the numerous standards listed in the text can be consulted for additional information not contained in the 7th Edition of Belt Conveyors for Bulk Materials. Always consult and site the most recent version of any reference or standard. CEMA Member Companies can offer application and design advice on specific applications.

The Table of Contents, main Chapter headings and related Chapter sub headings within the Chapters, are not repeated in the Index although some terms may be the same or similar. Appendix B, Nomenclature, and The List of Equations, Figures and Tables are other reference source that maybe helpful in locating information on a particular topic.

WWW.CEMANET.ORG has issued this document (14604) on Apr 24, 2017 to Pattarapom Sritrakul (quantum_1@hotmail.com)

Index

A

accelerating force 148, 356
acceleration 148, 204, 211, 213, 214, 232, 239, 251, 264, 354, 513, 580, 589, 618
access 37, 42,
access doors 452
accident 642, 644
AC induction motor 582, 588, 590, 597, 599, 602, 603
active 135, 197, 198, 201, 214, 215, 216, 229, 233, 237, 240, 507, 680, 683
active speed change 214
air movement 498
air supported conveyor 693
alignment 124, 180, 226, 296, 344, 401, 474, 611, 623, 675, 797, 799, 802, 804
alignment free drive 611
anchor bolts 26
angle of incline 53, 65, 79, 373
angle of internal friction 4 537
angle of repose 36, 50, 56, 77, 79, 81, 142, 189, 48,7 492, 528
ARPM273
ASME B20.1 643
automatic takeup 142, 208, 236, 245, 246, 248, 675, 677

B

backstop 202, 216, 233, 452, 612
bearing 101, 152, 157, 198, 225, 331, 582, 584, 606, 640, 659, 685
bearing failure 295, 344, 346, 606, 801
bearing housing 333, 584, 676, 799, 801
bearing life 101, 106, 109, 336, 341, 376
belt 269, 374, 381, 391, 404, 410, 415, 491, 699
belt alignment 23, 26, 96, 124, 401, 457, 623, 675, 797, 804
belt cleaners 199, 431
belt cleaning 98, 199, 245, 382, 431
belt construction 297, 374, 393, 404, 410
belt cover indentation 159
belt covers 159, 272, 279, 464
belt feeder 530
belt lift off 352, 420
belt modulus 223, 308, 355
belt monitoring 295
belt overload 624
belt profile 20
belt protection 450, 454, 464, 623
belt sag 12, 55, 60, 116, 191, 208, 209, 210 252, 456,518, 678, 705
belt scale 469
belt sealing 518, 533
belt slip 198, 247, 295, 325, 475, 624, 670, 674
belt speed 55, 61, 62, 63, 64, 104, 109, 121, 149, 195, 257, 297, 315, 361, 414, 436, 461, 467, 511,532
belt splice 124, 227, 285, 300, 699
belt strength 222, 294, 302
belt stretch 246, 249, 251, 287, 670, 674
belt takeup 674
belt tension 26, 37, 107, 129-268
belt training 457
belt training idler 96, 97
belt weight 108, 224, 307, 308
belt width 60-62, 93, 257, 297, 435, 534
bend pulley 327, 360, 460, 658, 677
bin level 625
blocked chute detector 473
booster drive 18, 243, 245
brake 202, 233, 251, 616-618,
breaker 224, 279, 281, 285
buckling 33, 250, 289, 355, 359
build-up 34, 36, 38, 97, 431, 632
bulk density 38, 50, 54, 66, 75, 77, 79, 178, 189
bushing 320-322, 684

C

calculated idler load 101-107, 190, 359
Canada 30, 31, 583, 659
capacity 3-5, 48, 54, 64-89, 112, 341, 389, 395, 404, 414, 422, 486, 534, 605, 615, 621, 701, 728
capital cost 11
carcass 280-284, 300, 489
carryback 5, 12, 431-433, 437-439, 448, 449, 460, 463
carryback level 437
carrying idler 94-97, 788
CEMA 501.1 23, 313-317, 328-330, 348
CEMA B105.1 23, 313-317, 328-330, 348
CEMA cross sectional area 67, 422
CEMA Historical Method 134, 141, 142, 409, 422, 713, 785-795
CEMA Idler Class 22, 93, 102, 454
CEMA Material Code 53, 437
CEMA Standard 502 22, 93
CEMA Standard 550 4, 36, 50, 52, 53
CEMA Standard 575 96, 455
CEMA standard skirtboard width 66, 73
CEMA Universal Method 134
center loading 21, 457, 475, 486, 700, 705, 707, 806
center of mass 546, 551, 552, 560

www.DUNLANET.ORG This issue of this document (1960) on 6-24-2017 to Pantaporn Strakul, Suanluang, Thailand

center roll 68
ceramic lagging 206, 325
chute 20, 37, 64, 431, 449, 473, 484-489, 492, 510-512, 523, 545, 700
chute level switch 473
chute plug 80, 624
clearance 43-46, 301, 345, 512, 514, 517, 654
cleated belt 5, 55, 374-380, 384, 385, 388
clustered drives 243
codes 22, 28-31, 37-40, 649, 650
coefficient of friction 56, 180, 187, 199, 206, 476, 712
compound curves 205, 373, 399
concave curve 352-357
connections 27
constructional stretch 674
controlled acceleration 619, 674
controlled flow chutes 487, 488, 510-512
controlled flow transfers 488
convex curve 157, 205, 357-361
conveying angle 5, 390
conveyor drive 229, 230, 244, 249, 580-612, 730
conveyor jam 38, 588
conveyor pulley 301, 313-320, 348-350
corrosion 22, 33, 40-42
cost per ton 2, 9, 10
coupling 619-621, 657, 802, 803
cover 464, 702
cover wear 278, 279, 299, 444
creeper drive 233, 612
crossover 47, 644
cross section 20, 54, 64-70, 76, 78, 82-89, 224, 375
cross sectional area 64-70, 76
crossunder 47, 644, 668, 669
curve 4, 17-19, 352-369, 399, 412, 419, 703
curve radii 354, 355, 358, 359, 399, 401, 407, 419, 421, 703

D

deadband 237, 238, 248
dead load 26, 35, 40, 76
dead shaft pulley 334, 348
deceleration 204, 211, 213-218, 230, 231, 240, 250, 251, 363, 618
deck plate 227, 449, 462
declined conveyor 54, 64, 204, 213, 233, 234, 551, 616-618
deflection 22, 32, 33, 329, 490
deflection wheel 382, 383, 388, 411, 412, 415
degradation 2, 22, 61-63, 80, 135, 148, 195, 275, 279, 287, 295, 301, 373, 484-487, 524, 528, 695, 706
density 4, 38, 50, 54, 56, 138, 178, 293, 300, 486, 500, 506, 600, 697, 717
depth of material 66, 74, 187, 188
derating 80
design capacity 36, 76, 81, 228
design factor 79-81
diagonal plow 450, 451
dimensionless ratio 67-74
DIN f 241
direct coupling 588, 590, 592, 594, 596
discharge 6, 17, 20, 22, 39, 45, 46, 62, 200, 239, 245, 290, 301, 396, 413, 439, 451, 468, 499, 542, 543-545
discharge chute 301, 511, 513, 523-525, 702
discharge plow 200, 439, 451, 543, 544
displaced air 498, 703
dribble chute 43, 440, 443, 448, 449, 523
drip pan 36, 463
drive arrangement 134, 228, 244, 587, 607-612
drive efficiency 323, 611
dust 4, 6, 7, 8, 12, 34, 36, 62, 63, 75, 391, 415, 431, 496, 499-510
dust collection 506-509
dust control 4, 348, 493, 499-511, 514
dust suppression 34, 500-511, 514, 516
dynamic analysis 135, 211, 213, 217, 218, 220, 224, 233, 238, 250-254, 261, 263
dynamic braking 598, 617

E

eccentric locking collar 337
eddy-current brake 616
eddy-current coupling 604, 619
edge distance 64-72, 76-89
edge sealing 75, 457, 492, 513, 518
efficiency 179, 230, 233, 235, 241, 267, 268, 294, 323, 433, 583, 602, 611, 612, 688, 697, 709, 711, 732
elastic stretch 218, 223, 674
elongation 210, 217, 237, 273, 274, 281, 287, 335, 674, 684
end disc 94, 347, 348, 801
energy loss 135, 142, 150, 159, 161, 177, 191, 192, 195, 222, 232, 245, 594, 601
environmental 2, 4, 8, 12, 23, 28, 38, 40, 51, 105, 110, 111, 138, 225, 253, 302, 343, 362, 390, 414, 431, 433, 633, 640, 660, 678, 694
environmental load 28, 38

F

fatigue stress 328, 349
feeder 239, 288, 413, 526-541, 586
feeder power 537, 540
fire detection 625

www.CEMAFLEX.com has issued this document (1-604) on April 24, 2017 to Chaiyapom Sirakorn, Suddeng., , Thailand

flame resistance 274, 275, 281
flangeless 321
flight 10, 137, 143, 144, 146, 152, 189, 203, 242, 247, 356
flowability 50, 51, 192, 440, 531
flow aid device 533
flow surfaces 487, 519
fluid atomization 502, 504
fluid coupling 222, 599, 600-602, 604, 620, 622, 628
flywheel 213, 231, 621
foam 500-502, 505
fog 446, 447, 500, 502
fold belt 404-410
food 274-276, 336, 385, 414, 434, 441, 448, 521, 522
foundation 25, 26, 27, 30, 39, 42, 802
frames 26, 96, 124, 581
frequency factor 276-278
fugitive material 65, 237, 433, 449, 460-462, 492-518
full voltage starting 589, 590, 599, 602, 628

G

galleries 8, 24, 25, 36, 464
generated air 498, 499
Grade I, II 273, 276, 277, 309
gravity 148, 254, 545-547
grizzly 491
guarding 9, 29, 47, 485, 643, 650-659, 677, 678, 683

H

hazard 4, 9, 34, 63, 80, 216, 251, 431, 452, 453, 461, 463, 581, 613, 630-668, 677, 808
head pulley 17, 37, 124, 138, 244, 301, 442, 467, 657, 702
height of material 73, 95, 160, 188, 276, 539
height of skirtboard 514, 515
high tension 99, 100, 203, 204, 225, 281, 285, 313, 316, 323, 325
hood 499, 507, 510-512, 719, 720,
horizontal curve 4, 17, 19, 54, 155, 205, 211, 361-369, 399, 414, 703, 707
horizontal takeups 679, 682, 683
hot materials 2, 274, 302
housekeeping 12, 36, 63, 431, 632, 639, 640, 644, 695
hub 313, 314, 320-322, 347, 348
hydraulic coupling 602, 620
hydrostatic pressure 539, 540
hydroviscous coupling 603, 604
hysteresis 237, 684

I

idler alignment 123, 180-186, 226, 797, 798, 804
idler life 100-102, 105, 106, 110, 116, 123, 225, 289, 657
idler load rating 100-109, 112-115, 117, 145, 157, 159, 190, 205, 207, 360
idler seal drag 143, 150, 152, 154
idler spacing 55, 56, 99-101, 119, 141, 142, 152-154, 162, 163, 190-192, 208-210, 226, 241, 252, 359, 360, 490
idler tilt 180, 181, 184-186, 205
impact 22, 56, 63, 95-97, 101, 103-105, 112, 116, 187, 250, 291, 295, 450, 487-492, 497, 511, 519, 533, 537, 701, 726
impact bed 454-457
impact energy 120, 272-279, 292, 413, 454-456, 499
impact idler 95-97, 101, 103, 107, 120
impact resistance 291, 519
imperial units 761
incline 17, 64, 79, 234, 257, 373, 377, 486, 514, 551, 555-557, 615, 618
incline angle 4, 5, 54, 55, 373, 375, 390, 403, 407, 409, 415, 4,22, 428, 706
inclined conveyor 55, 234, 245, 374, 555-557, 616-618
indentation loss 143, 159-179, 222, 227, 705
induced air 497-499, 711
inertia 127, 128, 135, 136, 204, 211, 214, 227, 228, 230-232, 246, 250, 251, 588, 681
inspection 34, 42, 43, 438, 452, 464, 631-640, 631
installation 13, 30, 35, 63, 123, 182, 343, 431, 518, 643, 705, 797-808
instrumentation 587, 704, 731, 809-811, 815-817
interface angle 512
interface friction 50, 56, 532, 539
interlock 52, 373, 413, 441, 452, 488, 531, 533, 588, 602, 622, 625, 626
intermediate loading 392, 413, 517
internal friction 4, 50, 177, 187, 191, 218, 416, 489, 537-540, 680

K

keyless locking assemblies 322, 329
kgf VII, 138, 761, 762
K_t 142, 785-795
K_x 142, 785-795
K_y 142, 785-795

L

L_{10} 102, 109-111, 342
lagging 105, 206, 227, 228, 318, 319, 322-325, 460, 475, 632

www.FEMANET.org has issued this document (1-2004) on Apr 24, 2014 to Patrapon Sirirakol, Siamluang, Thailand

lbf VII,138, 761-762
length of skirtboard 513, 514, 517
level 26, 34, 67, 96, 124, 473, 625, 797-808
lift-off 55, 194-197, 289, 352, 356, 420, 703
live load 36, 37, 40
live shaft idler 112, 115, 382, 530
loading 3-9, 17, 21, 22, 32, 36-40, 60-66, 75-81, 101, 216, 239, 278-293, 486, 517, 535, 701, 728
load shape 64, 545, 546
lockout 588, 625, 626, 797, 808
Low rolling resistance 160, 165, 179
low temperature 33, 225, 233, 274, 275, 335, 600, 612, 795
low tension 233, 250
lubrication 9, 225, 345, 606, 640-642
lump size 4, 60-62, 75, 103, 210, 293, 397, 406, 414, 423, 515, 528
lump weight factor 292, 293

M

magnetic separator 466-468
maintenance 10, 42, 105, 111, 477, 532, 587, 631, 632, 643, 705, 730
manual takeup 208, 236, 247, 675-678
material build-up 50, 105, 322
material characteristics 50, 440, 531
material weight 36, 100, 106
maximum belt tension 136, 204, 240, 265, 684
mechanical clutch 621
mechanical friction brake 616
metal detector 296, 468
Mexico 31
MIL-STD 882 661
mine duty pulley 315, 316, 325
minimum radius 353-355, 357-359, 414
minimum belt tension 210, 235, 238, 240, 243, 245-247, 684, 703
misalignment 54, 60, 98, 107, 143, 180-186, 190, 191, 226, 296, 344, 401, 402, 474, 611
misalignment switches 475
molded cleat belts 374-380
motivating force 362-366
motorized conveyor pulley 349, 598, 599, 610
mounted bearing 331,332, 339, 344
moving mass 211-213, 215, 621
multiple drives 232, 242-244, 587, 588

N

noise 8, 63, 460, 522, 705
non standard edge distance 68, 71, 72
normal force 140, 151, 227, 365, 366
normal load 157, 161, 407, 417, 420

O

offset center roll 94, 95
operating costs 2-11, 48, 239, 362, 458, 583, 734
operation 2-11, 28, 42, 296, 630, 643, 728
overland 8, 10, 62, 160, 205, 226, 295, 362, 460, 670, 695, 730, 734, 785

P

panel spacing 400, 401
particle size 50, 54, 493, 494, 496, 498, 500, 501, 506, 540, 545, 720, 723
passive 123, 150, 197, 198, 213-216, 232, 236, 260
passive dust control 510
paths of travel 4, 17-21
performance based 433, 437
picking idler 95, 114
plenum 695-699
plow 6, 7, 62, 143, 200, 201, 449-452, 461, 529, 543-545
plugged chute 9, 37, 239, 296, 537, 624
pocket belt 5, 381-390, 448
potential energy 135, 148, 210, 251, 533, 618, 626, 688
power 9, 229, 230, 267, 268, 403, 476, 540, 541, 611, 712
press fit 339
pre-tension 205, 238, 248
price 11, 12, 431
pullcord 9, 234, 297, 472, 473, 651, 656
pulley 17,23, 198, 207, 227, 240, 242, 244, 303-320, 347-350, 360
pulley cleaner 460, 461
pulley face width 23, 301, 319, 400
pulley inertia 228
pulley weight 228, 229, 320

R

rail 4, 10
reaction time 238, 495, 642, 680
reciprocating plate feeder 527
reduction in diameter 400
regeneration 10, 138, 144, 155, 185, 144, 155, 185, 202, 211, 213, 233, 239, 242, 253, 392, 586, 617, 618
regenerative braking 617
reliability 2, 4, 8
return idler 17, 94-101, 114, 126, 128, 252, 359, 655, 656
rip detection 295, 297-299, 471,

WWW.NEMAB.ORG has issued this document (1998) on Apr 24, 2008 to Prapon Sirakul (psirakul@yahoo.com), , , Thailand

625
risk assessment 659-669
RMA 273
rock box 492
roll diameter 93, 102, 104, 105, 110, 122
rotary cleaner 445
rotary drum feeder 529
R_{rxx} 145
run-in 675, 806, 807, 810, 813, 816

S

safety 9, 495, 630-672, 719
safety factor 138, 222, 223, 230, 247, 267, 294, 295, 302
safety labels 644-648, 808
sampling system 470-471, 704
sandwich belt 5, 407, 415-428
scale idler 99
scraper feeder 448, 527
screw takeup 318, 675-677
seal 93, 143, 152, 157, 198, 225, 339-341, 606, 787-795, 801, 808-812, 813-818
service 43, 302, 438, 452, 477, 631, 640
settling 42, 54, 178
shafting 313, 315-331, 333, 350, 657
shutdown 209, 213-215
sidewall 5, 381-385
simulation 12, 220, 221, 489, 512, 715-729
SI units 761, 762
skirtboard clearance 517
skirtboard resistance 539, 540
skirtboards 64, 66, 73, 187-189, 512-519, 700
skirtboard sealing 209, 518, 807
skirtboard width 66, 71, 73, 74
slider bed 12, 96, 187, 451, 456, 457
slip-back 55, 374, 375
slit edge 272, 279
software 32, 217, 253
speed reducer 231, 232, 605-614
spillage 7, 12, 36, 55, 60, 63, 80, 209, 289, 297, 496, 727
splice 223, 285-287, 294, 300-302
splice monitoring 300, 301
spoon 7, 278, 488, 510-512, 719, 720
squareness 798, 800
stabilizing force 366-368
standard conveyor 141, 785
start warning 625, 626
steady state 36, 37, 64, 142, 150, 203, 204, 206, 247, 260, 316, 580
steel cable 302
steel cord 142, 275, 279-281, 284-286, 294, 295
steep angle conveying 4-6, 373-428
stockpile 6, 7, 17, 39, 542, 543
stone box 492
stretch 223, 246, 247, 251, 287, 615, 670, 674
stringer 17, 23, 24
structure 17, 22-28, 32-47, 182, 687, 797-807
stub shaft pulley 350
suppression 34, 500-506, 510, 625
surcharge angle 36, 50, 54, 55, 64, 79
surfactant 500-505
suspended belt 5, 390, 410-415

T

T_1, T_2 115, 207, 220, 221, 326, 327, 353, 358
tail drives 245, 246
tail protection plows 200, 441, 449, 450, 463
tail pulley guarding 657
takeup 17, 137, 218, 233, 235, 236-238, 241, 242, 245-253, 317, 326, 327, 335, 624, 658, 674-689, 703
takeup force 137, 679, 684
takeup location 246, 677, 678
takeup movement 674, 675, 678
takeup weight 236, 678, 681, 682, 688
T_c 236, 353-360
T_e 141,142, 249, 540, 713
tension management 202, 259
tension ratings 281, 294, 302, 316
test procedure 807, 813
thermal penalty 501
thermal rating 232, 586, 605
time interval 212, 561
T_{max} 138, 140, 191, 202, 206, 240
T_{min} 138, 202, 206, 227, 228, 242, 243, 246, 260
tolerance 180, 183, 318, 319, 460, 797-808
torque 38, 127, 201, 218, 220, 227, 229, 264-267, 345
torque control 583-586, 589, 615, 616
tower 26, 35, 525, 682, 687, 688
tracking 124, 184, 226, 451, 457, 486, 532, 677, 701
training 8, 96, 99, 123, 457-459, 631, 642, 643, 658, 661, 804, 805
trajectory 442, 545-576
trampling loss 143, 191-194, 241, 259
transfer angle 20
transfer point 483-576
transient 96, 135, 203, 260
transient behavior 246, 249-251
transient loads 223, 245, 260
transient tension 135, 210-216, 224, 249, 251, 253, 317
transition 64, 96, 289, 392, 534, 597, 699, 701
transition distance 101, 228, 289-291,392, 398, 399, 408, 409, 414, 418, 420, 518, 534, 547, 699

www.CEMA.ORG has issued this document (1960) on Apr 22, 2011 to Ingeteam Sistrakol, Suanfuang, , Thailand

tripper 18, 362, 413, 451, 542, 543, 651, 654. 734
trouble shooting 670, 716
troughability 223, 224, 288, 294, 303-306
trough angle 54, 69, 294, 534, 694
troughing idler 94-96, 100, 101, 106, 107, 112-114 125, 127
truck haulage 4, 10, 11
trusses 24, 25, 26, 33, 38, 797
tube conveyor 9, 391-403

U

uniform feed 6, 65, 216
unit conversion 761, 762
unloading 3, 4, 7, 9, 50, 61-63, 205, 216, 254, 373, 381, 431

V

valley angle 487, 488
variable speed 526, 586-604, 612, 620
velocity 55, 63, 149, 361, 511, 513, 546, 552, 728
vertical curve 18, 251, 253, 265, 295, 352-361, 399, 514
vertical gravity takeup 236, 326, 327, 680, 681, 686, 689
vertical misalignment 185, 190, 191
vibration 32, 99,100, 251, 341, 350, 462, 585, 602, 631, 670

W

walkway 25, 37, 42-47, 396
water 27,34, 36, 38, 40, 55, 225, 433, 447, 448, 463, 500-506
wear liner 513, 518-522
weather protection 22, 464, 465
wing pulley 313, 315, 318, 319, 325, 438, 325, 350, 462
wire rope friction 684

Y

YZ plane 180, 183, 184

Z

zero speed switch 9, 475, 624

WWW.CEMAFE.ORG (restricted document 14604) on Apr 24, 2017 to Patarapon Sritrakool, Ruanluang, , , Thailand