BS EN IEC 61854:2020

Licensed copy: Sukanya Arayangkoon, The Electricity Generating Authority of, Version correct as of 01/12/2020



BSI Standards Publication

Overhead lines — Requirements and tests for spacers

bsi.

Licensed copy: Sukanya Arayangkoon, The Electricity Generating Authority of, Version correct as of 01/12/2020

National foreword

This British Standard is the UK implementation of EN IEC 61854:2020. It is identical to IEC 61854:2020. It supersedes BS EN 61854:1998, which is withdrawn.

The UK participation in its preparation was entrusted to Technical Committee PEL/11, Overhead Lines.

A list of organizations represented on this committee can be obtained on request to its secretary.

This publication does not purport to include all the necessary provisions of a contract. Users are responsible for its correct application.

© The British Standards Institution 2020
Published by BSI Standards Limited 2020

ISBN 978 0 580 92504 7

ICS 29.240.20

Compliance with a British Standard cannot confer immunity from legal obligations.

This British Standard was published under the authority of the Standards Policy and Strategy Committee on 30 April 2020.

Amendments/corrigenda issued since publication

Date	Text affected

EUROPEAN STANDARD

NORME EUROPÉENNE

EUROPÄISCHE NORM

EN IEC 61854

April 2020

ICS 29.240.20

Supersedes EN 61854:1998 and all of its amendments and corrigenda (if any)

English Version

Overhead lines - Requirements and tests for spacers (IEC 61854:2020)

Lignes aériennes - Exigences et essais applicables aux entretoises (IEC 61854:2020)

Freileitungen - Anforderungen und Prüfungen für Feldabstandhalter (IEC 61854:2020)

This European Standard was approved by CENELEC on 2020-03-24. CENELEC members are bound to comply with the CEN/CENELEC Internal Regulations which stipulate the conditions for giving this European Standard the status of a national standard without any alteration.

Up-to-date lists and bibliographical references concerning such national standards may be obtained on application to the CEN-CENELEC Management Centre or to any CENELEC member.

This European Standard exists in three official versions (English, French, German). A version in any other language made by translation under the responsibility of a CENELEC member into its own language and notified to the CEN-CENELEC Management Centre has the same status as the official versions.

CENELEC members are the national electrotechnical committees of Austria, Belgium, Bulgaria, Croatia, Cyprus, the Czech Republic, Denmark, Estonia, Finland, France, Germany, Greece, Hungary, Iceland, Ireland, Italy, Latvia, Lithuania, Luxembourg, Malta, the Netherlands, Norway, Poland, Portugal, Republic of North Macedonia, Romania, Serbia, Slovakia, Slovenia, Spain, Sweden, Switzerland, Turkey and the United Kingdom.



European Committee for Electrotechnical Standardization
Comité Européen de Normalisation Electrotechnique
Europäisches Komitee für Elektrotechnische Normung

CEN-CENELEC Management Centre: Rue de la Science 23, B-1040 Brussels

© 2020 CENELEC All rights of exploitation in any form and by any means reserved worldwide for CENELEC Members.

Licensed copy: Sukanya Arayangkoon, The Electricity Generating Authority of, Version correct as of 01/12/2020

Licensed copy: Sukanya Arayangkoon, The Electricity Generating Authority of, Version correct as of 01/12/2020

European foreword

The text of document 11/265/FDIS, future edition 2 of IEC 61854, prepared by IEC/TC 11 "Overhead lines" was submitted to the IEC-CENELEC parallel vote and approved by CENELEC as EN IEC 61854:2020.

The following dates are fixed:

- latest date by which the document has to be implemented at national level by publication of an identical national standard or by endorsement (dop) 2020-12-24
- latest date by which the national standards conflicting with the document have to be withdrawn (dow) 2023-03-24

This document supersedes EN 61854:1998 and all of its amendments and corrigenda (if any).

Attention is drawn to the possibility that some of the elements of this document may be the subject of patent rights. CENELEC shall not be held responsible for identifying any or all such patent rights.

Endorsement notice

The text of the International Standard IEC 61854:2020 was approved by CENELEC as a European Standard without any modification.

Licensed copy: Sukanya Arayangkoon, The Electricity Generating Authority of, Version correct as of 01/12/2020

Annex ZA
(normative)

Normative references to international publications with their corresponding European publications

The following documents are referred to in the text in such a way that some or all of their content constitutes requirements of this document. For dated references, only the edition cited applies. For undated references, the latest edition of the referenced document (including any amendments) applies.

NOTE 1 Where an International Publication has been modified by common modifications, indicated by (mod), the relevant EN/HD applies.

NOTE 2 Up-to-date information on the latest versions of the European Standards listed in this annex is available here: www.cenelec.eu.

Publication	Year	Title	EN/HD	Year
IEC 60050-466	1990	International Electrotechnical Vocabulary. Chapter 466: Overhead lines	-	-
IEC 60888	1987	Zinc-coated steel wires for stranded conductors	-	-
IEC 61284	1997	Overhead lines - Requirements and tests for fittings	EN 61284	1997
ISO 34-1	2015	Rubber, vulcanized or thermoplastic - Determination of tear strength - Part 1: Trouser, angle and crescent test pieces	-	-
ISO 34-2	2015	Rubber, vulcanized or thermoplastic - Determination of tear strength - Part 2: Small (Delft) test pieces	-	-
ISO 37	2017	Rubber, vulcanized or thermoplastic - Determination of tensile stress-strain properties	-	-
ISO 188	2011	Rubber, vulcanized or thermoplastic - Accelerated ageing and heat resistance tests	-	-
ISO 812	2017	Rubber, vulcanized or thermoplastic - Determination of low-temperature brittleness	-	-
ISO 815-1	2014	Rubber, vulcanized or thermoplastic - Determination of compression set - Part 1: At ambient or elevated temperatures	-	-
ISO 815-2	2014	Rubber, vulcanized or thermoplastic - Determination of compression set - Part 2: At low temperatures	-	-
ISO 868	2003	Plastics and ebonite - Determination of indentation hardness by means of a durometer (Shore hardness)	EN ISO 868	2003

ISO 1183-1	2019	Plastics - Methods for determining the density of non-cellular plastics - Part 1: Immersion method, liquid pycnometer method and titration method	EN ISO 1183-1	2019
ISO 1431-1	2012	Rubber, vulcanized or thermoplastic - Resistance to ozone cracking - Part 1: Static and dynamic strain testing	-	-
ISO 1461	2009	Hot dip galvanized coatings on fabricated iron and steel articles - Specifications and test methods	EN ISO 1461	2009
ISO 1817	2015	Rubber, vulcanized or thermoplastic - Determination of the effect of liquids	-	-
ISO 2781	2018	Rubber, vulcanized or thermoplastic - Determination of density	-	-
ISO 2859-1	1999	Sampling procedures for inspection by attributes - Part 1: Sampling schemes indexed by acceptable quality limit (AQL) for lot-by-lot inspection	-	-
+ A1	2011		-	-
ISO 2859-2	1985	Sampling procedures for inspection by attributes - Part 2: Sampling plans indexed by limiting quality (LQ) for isolated lot inspection	-	-
ISO 2921	2011	Rubber, vulcanized - Determination of low-temperature retraction (TR test)	-	-
ISO 3951-1	2013	Sampling procedures for inspection by variables - Part 1: Specification for single sampling plans indexed by acceptance quality limit (AQL) for lot-by-lot inspection for a single quality characteristic and a single AQL	-	-
ISO 3951-2	2013	Sampling procedures for inspection by variables - Part 2: General specification for single sampling plans indexed by acceptance quality limit (AQL) for lot-by-lot inspection of independent quality characteristics	-	-
ISO 4649	2017	Rubber, vulcanized or thermoplastic - Determination of abrasion resistance using a rotating cylindrical drum device	-	-
ISO 4662	2017	Rubber, vulcanized or thermoplastic - Determination of rebound resilience	-	-
ISO 6502-2	2018	Rubber - Measurement of vulcanization characteristics using curemeters - Part 2: Oscillating disc curemeter	-	-
ISO 9001	2015	Quality management systems - Requirements	EN ISO 9001	2015

Licensed copy: Sukanya Arayangkoon, The Electricity Generating Authority of, Version correct as of 01/12/2020

Licensed copy: Sukanya Arayangkoon, The Electricity Generating Authority of, Version correct as of 01/12/2020

IEC 61854

Edition 2.0 2020-02

INTERNATIONAL STANDARD

NORME INTERNATIONALE

colour inside

Overhead lines – Requirements and tests for spacers

Lignes aériennes – Exigences et essais applicables aux entretoises

INTERNATIONAL
ELECTROTECHNICAL
COMMISSION

COMMISSION
ELECTROTECHNIQUE
INTERNATIONALE

ICS 29.240.20

ISBN 978-2-8322-7798-0

Warning! Make sure that you obtained this publication from an authorized distributor.
Attention! Veuillez vous assurer que vous avez obtenu cette publication via un distributeur agréé.

® Registered trademark of the International Electrotechnical Commission
Marque déposée de la Commission Electrotechnique Internationale

CONTENTS

FOREWORD 4
1 Scope 6
2 Normative references 6
3 Terms and definitions 7
4 General requirements 8
4.1 Design 8
4.2 Materials 9
4.2.1 General 9
4.2.2 Non-metallic materials 9
4.3 Mass, dimensions and tolerances 9
4.4 Protection against corrosion 9
4.5 Manufacturing appearance and finish 9
4.6 Marking 9
4.7 Installation instructions 9
4.8 Specimen 9
5 Quality assurance 10
6 Classification of tests 10
6.1 Type tests 10
6.1.1 General 10
6.1.2 Application 10
6.2 Sample tests 10
6.2.1 General 10
6.2.2 Application 10
6.2.3 Sampling and acceptance criteria 11
6.3 Routine tests 11
6.3.1 General 11
6.3.2 Application and acceptance criteria 11
6.4 Table of tests to be applied 11
7 Test methods 13
7.1 Visual examination 13
7.2 Verification of dimensions, materials and mass 13
7.3 Corrosion protection test 13
7.3.1 Hot dip galvanized components (other than stranded galvanized steel wires) 13
7.3.2 Ferrous components protected from corrosion by methods other than hot dip galvanizing 14
7.3.3 Stranded galvanized steel wires 14
7.3.4 Corrosion caused by non-metallic components 14
7.4 Non-destructive tests 14
7.5 Mechanical tests 14
7.5.1 Clamp slip tests 14
7.5.2 Tests on bolt sets 19
7.5.3 Simulated short-circuit current test and compression and tension tests 21
7.5.4 Characterisation of the elastic and damping properties 27
7.5.5 Flexibility tests 31
7.5.6 Fatigue tests 33

Licensed copy: Sukanya Arayangkoon, The Electricity Generating Authority of, Version correct as of 01/12/2020

7.6 Tests to characterise elastomers 36
7.6.1 General 36
7.6.2 Tests 36
7.6.3 Ozone resistance test 36
7.7 Electrical tests 38
7.7.1 Corona and radio interference voltage (RIV) tests 38
7.7.2 Electrical resistance test 38
7.8 Verification of vibration behaviour of the bundle/spacer system 39
Annex A (normative) Minimum technical details to be agreed between purchaser and supplier 40
Annex B (informative) Compressive forces in the simulated short-circuit current test 41
Annex C (informative) Characterisation of the elastic and damping properties Stiffness-Damping Method 42
Annex D (informative) Verification of vibration behaviour of the bundle/spacer system 44
D.1 General 44
D.2 Aeolian vibration 44
D.3 Subspan oscillation 45
Annex E (informative) Description of HT conductors as given in CIGRE TB 695-2017 [7] 46
Bibliography 47

Figure 1 – Test arrangements for longitudinal slip tests 16
Figure 2 – Test arrangement for torsional slip tests 19
Figure 3 – Test arrangement for the spring force test at room temperature 20
Figure 4 – Test arrangement for permanent load test on conical washers 21
Figure 5 – Test arrangements for simulated short-circuit current tests 25
Figure 6 – Test arrangements for compression and tension test 26
Figure 7 – Typical logaritmic decrement graph 30
Figure 8 – Sketch of longitudinal displacement test 32
Figure 9 – Sketch of vertical displacement test 32
Figure 10 – Sketch of conical displacement test 32
Figure 11 – Sketch of transverse horizontal displacement test 33
Figure 12 – Test arrangements for subspan oscillation tests 34
Figure 13 – Test arrangement for aeolian vibration test 36
Figure C.1 – Rotation of spacer arm around the centre of the hinge 42
Figure C.2 – Vector representation of formula C.2 43

Table 1 – Tests on spacers 12
Table 2 – Tests on elastomers 37

Licensed copy: Sukanya Arayangkoon, The Electricity Generating Authority of, Version correct as of 01/12/2020

INTERNATIONAL ELECTROTECHNICAL COMMISSION

_____

OVERHEAD LINES – REQUIREMENTS AND TESTS FOR SPACERS

FOREWORD

1) The International Electrotechnical Commission (IEC) is a worldwide organization for standardization comprising all national electrotechnical committees (IEC National Committees). The object of IEC is to promote international co-operation on all questions concerning standardization in the electrical and electronic fields. To this end and in addition to other activities, IEC publishes International Standards, Technical Specifications, Technical Reports, Publicly Available Specifications (PAS) and Guides (hereafter referred to as "IEC Publication(s)"). Their preparation is entrusted to technical committees; any IEC National Committee interested in the subject dealt with may participate in this preparatory work. International, governmental and non-governmental organizations liaising with the IEC also participate in this preparation. IEC collaborates closely with the International Organization for Standardization (ISO) in accordance with conditions determined by agreement between the two organizations.
2) The formal decisions or agreements of IEC on technical matters express, as nearly as possible, an international consensus of opinion on the relevant subjects since each technical committee has representation from all interested IEC National Committees.
3) IEC Publications have the form of recommendations for international use and are accepted by IEC National Committees in that sense. While all reasonable efforts are made to ensure that the technical content of IEC Publications is accurate, IEC cannot be held responsible for the way in which they are used or for any misinterpretation by any end user.
4) In order to promote international uniformity, IEC National Committees undertake to apply IEC Publications transparently to the maximum extent possible in their national and regional publications. Any divergence between any IEC Publication and the corresponding national or regional publication shall be clearly indicated in the latter.
5) IEC itself does not provide any attestation of conformity. Independent certification bodies provide conformity assessment services and, in some areas, access to IEC marks of conformity. IEC is not responsible for any services carried out by independent certification bodies.
6) All users should ensure that they have the latest edition of this publication.
7) No liability shall attach to IEC or its directors, employees, servants or agents including individual experts and members of its technical committees and IEC National Committees for any personal injury, property damage or other damage of any nature whatsoever, whether direct or indirect, or for costs (including legal fees) and expenses arising out of the publication, use of, or reliance upon, this IEC Publication or any other IEC Publications.
8) Attention is drawn to the Normative references cited in this publication. Use of the referenced publications is indispensable for the correct application of this publication.
9) Attention is drawn to the possibility that some of the elements of this IEC Publication may be the subject of patent rights. IEC shall not be held responsible for identifying any or all such patent rights.

International Standard IEC 61854 has been prepared by IEC technical committee 11: Overhead lines.

This second edition cancels and replaces the first edition published in 1998. This edition constitutes a technical revision.

This edition includes the following significant technical changes with respect to the previous edition:

a) Consider the application of spacers on high temperature conductors specifying additional high temperature tests in clamp slip tests and for the characterization of elastic and damping properties;
b) Specify as far as possible test parameters and acceptance values;
c) Avoid as far as possible the alternative procedures for the same test;
d) Introduce a simpler test device for the simulated short circuit current test;
e) Introduce test at low temperature on fastener components such as break away bolts and conical spring washers;

Licensed copy: Sukanya Arayangkoon, The Electricity Generating Authority of, Version correct as of 01/12/2020

f) Prescribe a different procedure for subspan oscillation tests on spacers equipped with clamps having rod attachments;

g) Modify the test procedure for the aeolian vibration tests;

h) Prescribe a different procedure for aeolian vibration tests on spacers equipped with clamps having rod attachments;

i) Re-edit all the figures in order to make them more clear and homogeneous;

j) Introduce an additional test device for the simulated short circuit current test.

The text of this standard is based on the following documents:

FDIS	Report on voting
11/265/FDIS	11/272/RVD

Full information on the voting for the approval of this standard can be found in the report on voting indicated in the above table.

This document has been drafted in accordance with the ISO/IEC Directives, Part 2.

The committee has decided that the contents of this document will remain unchanged until the stability date indicated on the IEC website under "http://webstore.iec.ch" in the data related to the specific document. At this date, the document will be

- reconfirmed,
- withdrawn,
- replaced by a revised edition, or
- amended.

IMPORTANT – The 'colour inside' logo on the cover page of this publication indicates that it contains colours which are considered to be useful for the correct understanding of its contents. Users should therefore print this document using a colour printer.

Licensed copy: Sukanya Arayangkoon, The Electricity Generating Authority of, Version correct as of 01/12/2020

OVERHEAD LINES – REQUIREMENTS AND TESTS FOR SPACERS

1 Scope

This document applies to spacers for conductor bundles of overhead lines. It covers rigid spacers, flexible spacers and spacer dampers.

It does not apply to interphase spacers, hoop spacers and bonding spacers.

NOTE This document is written to cover the line design practices and spacers most commonly used at the time of writing. There may be other spacers available for which the specific tests reported in this document may not be applicable.

In some cases, test procedures and test values are left to agreement between purchaser and supplier and are stated in the procurement contract. The purchaser is best able to evaluate the intended service conditions, which should be the basis for establishing the test severity.

In Annex A, the minimum technical details to be agreed between purchaser and supplier are listed.

2 Normative references

The following documents are referred to in the text in such a way that some or all of their content constitutes requirements of this document. For dated references, only the edition cited applies. For undated references, the latest edition of the referenced document (including any amendments) applies.

IEC 60050(466):1990, *International Electrotechnical vocabulary (IEV) – Chapter 466: Overhead lines*

IEC 60888:1987, *Zinc-coated steel wires for stranded conductors*

IEC 61284:1997, *Overhead lines – Requirements and tests for fittings*

ISO 34-1:2015, *Rubber, vulcanized or thermoplastic – Determination of tear strength – Part 1: Trouser, angle and crescent test pieces*

ISO 34-2:2015, *Rubber, vulcanized or thermoplastic – Determination of tear strength – Part 2: Small (Delft) test pieces*

ISO 37:2017, *Rubber, vulcanized or thermoplastic – Determination of tensile stress-strain properties*

ISO 188:2011, *Rubber, vulcanized or thermoplastic – Accelerated ageing or heat resistance tests*

ISO 812:2017, *Rubber, vulcanized or thermoplastic – Determination of low-temperature brittleness*

ISO 815-1:2014, *Rubber, vulcanized or thermoplastic – Determination of compression set – Part 1: At ambient or elevated temperatures*

Licensed copy: Sukanya Arayangkoon, The Electricity Generating Authority of, Version correct as of 01/12/2020

ISO 815-2:2014, *Rubber, vulcanized or thermoplastic – Determination of compression set – Part 2: At low temperatures*

ISO 868:2003*, Plastics and ebonite – Determination of indentation hardness by means of a durometer (Shore hardness)*

ISO 1183-1: 2019, *Plastics — Methods for determining the density of non-cellular plastics — Part 1: Immersion method, liquid pycnometer method and titration method*

ISO 1431-1:2012, *Rubber, vulcanized or thermoplastic – Resistance to ozone cracking – Part 1: Static and dynamic strain testing*

ISO 1461:2009, *Hot dip galvanized coatings on fabricated iron and steel articles – Specifications and test methods*

ISO 1817:2015, *Rubber, vulcanized or thermoplastic – Determination of the effect of liquids*

ISO 2781:2018, *Rubber, vulcanized or thermoplastic – Determination of density*

ISO 2859-1:1999/AMD1: 2011, *Sampling procedures for inspection by attributes – Part 1: Sampling schemes indexed by acceptable quality limit (AQL) for lot-by-lot inspection*

ISO 2859-2:1985, *Sampling procedures for inspection by attributes – Part 2: Sampling plans indexed by limiting quality level (LQ) for isolated lot inspection*

ISO 2921:2011, *Rubber, vulcanized – Determination of low-temperature retraction (TR test)*

ISO 3951-1:2013*, Sampling procedures for inspection by variables -- Part 1: Specification for single sampling plans indexed by acceptance quality limit (AQL) for lot-by-lot inspection for a single quality characteristic and a single AQL*

ISO 3951-2:2013, *Sampling procedures for inspection by variables -- Part 2: General specification for single sampling plans indexed by acceptance quality limit (AQL) for lot-by-lot inspection of independent quality characteristics*

ISO 4649:2017, *Rubber, vulcanized or thermoplastic – Determination of abrasion resistance using a rotating cylindrical drum device*

ISO 4662:2017, *Rubber, vulcanized or thermoplastic – Determination of rebound resilience*

ISO 6502-2:2018, *Rubber – Measurement of vulcanization characteristics using curemeters – Part 2: Oscillating disc curemeter*

ISO 9001:2015, *Quality management systems – Requirements*

3 Terms and definitions

For the purposes of this document, the terms and definitions given in IEC 60050-466 apply as well as the following.

ISO and IEC maintain terminological databases for use in standardization at the following addresses:

- IEC Electropedia: available at http://www.electropedia.org/
- ISO Online browsing platform: available at http://www.iso.org/obp

Licensed copy: Sukanya Arayangkoon, The Electricity Generating Authority of, Version correct as of 01/12/2020

Licensed copy: Sukanya Arayangkoon, The Electricity Generating Authority of, Version correct as of 01/12/2020

3.1
rigid spacer
spacer allowing no relative movement between the subconductors at the spacer location

3.2
flexible spacer
spacer allowing relative movements between the subconductors at the spacer location

3.3
spacer system
complex of spacers and the relevant in-span distribution

3.4
high temperature conductors
HTC
conductors which are designed to have a maximum continuous operating temperature over 95 °C

Note 1 to entry: HTCa: conductors using annealed wires; HTCna: conductors using non-annealed wires.

3.5
maximum continuous operating temperature
conductor temperature specified by the manufacturer and measured at the outer wire layers

4 General requirements

4.1 Design

The spacer shall be designed as to:

– maintain subconductor spacing (at spacer locations), within any prescribed limits, under all conditions of service excluding short-circuit currents;

– prevent, in subspans between spacers, physical contact between subconductors, except during the passage of short circuit currents when the possibility of contact is accepted provided that the specified spacing is restored immediately following fault clearance;

– withstand mechanical loads imposed on the spacer during installation, maintenance and service (including short circuit conditions) without any component failure or unacceptable permanent deformation;

– avoid damage to the subconductor under specified service conditions;

– be free from unacceptable levels of corona and radio interference under specified service conditions;

– be suitable for safe and easy installation. For the bolted and latching clamp the design shall retain all parts when opened for attachment to the conductor;

– ensure that individual components will not become loose in service;

– be capable of being removed and re-installed on the subconductors without damage to the spacer or subconductors;

– maintain its function over the entire service temperature range;

– avoid audible noise.

Other desirable characteristics, which are not essential to the basic functions of the spacer but which may be advantageous to the purchaser, include:

- verification of proper installation from the ground,
- ease of installation and removal from energized lines

Detailed information on design, best practice and experience of spacers and spacer dampers is given in [6][1].

4.2 Materials

4.2.1 General

Spacers shall be made of any materials suitable for their purpose. Unless additional requirements are stated, the material shall conform to the requirements of IEC 61284.

4.2.2 Non-metallic materials

In addition to the requirements of IEC 61284, the conductivity of the various non-metallic components shall be such that when properly installed

– potential differences between metallic components do not cause damage due to discharge;
– line current including short circuit current and any current flow through the spacer do not degrade spacer components

4.3 Mass, dimensions and tolerances

Spacer mass and significant dimensions, including appropriate tolerances, shall be shown on contract drawings.

Tolerances applied to the mass and to the dimensions should ensure that the spacers meet their specified mechanical and electrical requirements.

4.4 Protection against corrosion

In addition to the applicable requirements of IEC 61284, stranded steel wires, if used, shall be protected against corrosion in accordance with IEC 60888.

4.5 Manufacturing appearance and finish

The spacers shall be free of defects and irregularities; all outside surfaces shall be smooth and all edges and corners well-rounded.

4.6 Marking

The fitting marking requirements of IEC 61284 shall be applied to all clamp assemblies including those using breakaway bolts.

Correct position of the top of the spacer (for example arrows pointing upward), if necessary, shall also be provided.

4.7 Installation instructions

The supplier shall provide a clear and complete description of the installation procedure and, if required, the in-span location of the spacers.

The supplier shall make available any special installation tool that is required.

4.8 Specimen

All tests described in this document are based on bolted clamps and clamps with helical fixation. If other types of clamps are tested, the clamps should be installed according the suppliers installation instruction.

---

[1] Numbers in square brackets refer to the Bibliography.

Licensed copy: Sukanya Arayangkoon, The Electricity Generating Authority of, Version correct as of 01/12/2020

Licensed copy: Sukanya Arayangkoon, The Electricity Generating Authority of, Version correct as of 01/12/2020

5 Quality assurance

A quality assurance programme taking into account the requirements of this document can be used by agreement between the purchaser and the supplier to verify the quality of the spacers during the manufacturing process.

Detailed information on the use of quality assurance is given in a system as per ISO 9001 or similar.

It is recommended that test and measuring equipment used to verify compliance to this document is routinely maintained and calibrated in accordance with a relevant quality standard.

6 Classification of tests

6.1 Type tests

6.1.1 General

Type tests are intended to establish design characteristics. They are normally made once and repeated only when the design or the material of the spacer is changed. The results of type tests are recorded as evidence of compliance with design requirements.

6.1.2 Application

Spacers shall be subjected to type tests as per Table 1. Each type test shall be performed on three samples which are identical, in all essential respects, with the spacers to be supplied under contract to the purchaser. All units shall pass the tests.

The spacers used for tests during which no damage occurs to the units or their components may be used in subsequent tests.

NOTE The unit subjected to type tests can be either a complete spacer or a component of the spacer as appropriate to the test.

6.2 Sample tests

6.2.1 General

Sample tests are required to verify that the spacers meet the performance specifications of the type test samples. In addition, they are intended to verify the quality of materials and workmanship.

6.2.2 Application

Spacers shall be subjected to sample tests as per Table 1. The samples to be tested shall be selected at random from the lot offered for acceptance. The purchaser has the right to make the selection.

The spacers used for tests during which no damage occurs to the units or their components may be used in subsequent tests.

The unit subjected to sample tests can be either a complete spacer or a component of the spacer as appropriate to the test.

Licensed copy: Sukanya Arayangkoon, The Electricity Generating Authority of, Version correct as of 01/12/2020

6.2.3 Sampling and acceptance criteria

The sampling plan procedures according to ISO 2859-1 and ISO 2859-2 (inspection by attributes) and ISO 3951 (inspection by variables) and the detailed procedures (inspection level, AQL, single, double or multiple sampling, etc.) shall be agreed between purchaser and supplier for each different attribute or variable.

Sampling inspection by variables is an acceptance sampling procedure to be used in place of inspection by attributes when it is more appropriate to measure on some continuous scale the characteristic(s) under consideration. In the case of failure load tests and similar expensive tests, better discrimination between acceptable quality and objective quality is available with acceptance sampling by variables than by attributes for the same sample size.

The purpose of the sampling process may also be important in the choice between a variables or attributes plan. For example, a customer may choose to use an attributes acceptance sampling plan to assure that parts in a shipment lot are within a required dimensional tolerance; the manufacturer may make measurements under a variables sampling plan of the same dimensions because of concern with gradual trends or changes which may affect the ability to provide shipment lots which meet the AQL.

6.3 Routine tests

6.3.1 General

Routine tests are intended to prove conformance of spacers to specific requirements and are made on every spacer. The tests shall not damage the spacers.

6.3.2 Application and acceptance criteria

Whole lots of spacers may be subjected to routine tests. Any spacer which does not conform to the requirements shall be discarded.

6.4 Table of tests to be applied

Table 1 indicates the tests which shall be performed. These are marked with an "X" in the table.

However, the purchaser may specify additional tests which are included in the table and marked with an "O".

Units or components damaged during the tests shall be excluded from the delivery to the customer.

Licensed copy: Sukanya Arayangkoon, The Electricity Generating Authority of, Version correct as of 01/12/2020

Table 1 – Tests on spacers

Clause	Test	Spacer damper			Flexible spacer			Rigid spacer		
		Type test	Sample test	Routine test	Type test	Sample test	Routine test	Type test	Sample test	Routine test
7.1	**Visual examination**	X	X	O	X	X	O	X	X	O
7.2	**Verification of dimensions, material and mass**	X	X	O	X	X	O	X	X	O
7.3	**Corrosion protection tests**	X [1)]	X [1)]		X [1)]	X [1)]		X [1)]	X [1)]	
7.4	**Non-destructive tests**	O	O	O	O	O	O	O	O	O
7.5	**Mechanical tests**									
7.5.1	– clamp slip tests	X	O		X	O		X	O	
7.5.2	– tests on bolt sets	X	X		X	X		X	X	
7.5.3	– simulated short-circuit current test and compression and tension tests	X	O		X	O		X	O	
7.5.4	– characterisation of the elastic and damping properties	X	O		O	O				
7.5.5	– flexibility tests	X	O		X	O				
7.5.6	– fatigue tests	X			O					
7.6	**Tests to characterise elastomers**	X	O		X [1)]	O [1)]				
7.7	**Electrical tests**									
7.7.1	– corona and radio interference voltage (RIV) tests	X			X			X		
7.7.2	– electrical resistance test	X	O		X [1)]	O [1)]		O [1)]		
7.8	**Verification of vibration behaviour of the bundle/spacer system**									
D.2	– aeolian vibration	O			O [2)]					
D.3	– subspan oscillation	O			O					

[1)] If applicable.

[2)] When used in conjunction with vibration dampers.

The supplier should state in the tender quality plan, or other tender documentation, which testing is already complete (i.e: which type test) and which tests (sample or routine) are included in the tender, subject to the approval or change required by the purchaser.

Licensed copy: Sukanya Arayangkoon, The Electricity Generating Authority of, Version correct as of 01/12/2020

7 Test methods

7.1 Visual examination

Type tests shall include visual examination to ascertain conformity of the spacers, in all essential respects, with the manufacturing or contract drawings. Deviations from the drawings shall be subject to the approval of the purchaser and shall be appropriately documented as an agreed concession.

Sample tests and, if required, routine tests shall include visual examination to ensure conformity of manufacturing process, shape, coating and surface finish of the spacer with the contract drawings. Particular attention shall be given to the markings required and to the finish of surfaces which come into contact with the conductor.

The sample test procedures and acceptance criteria shall be agreed between purchaser and supplier.

For spacers subject to corona type tests, the sample test shall include a comparison of shape and surface finish with one of the corona type test samples when specified or agreed by the purchaser.

7.2 Verification of dimensions, materials and mass

Type, sample and, if required, routine tests shall include verification of dimensions to ensure that spacers are within the dimensional tolerances stated on contract drawings. The purchaser may choose to witness the measurement of selected dimensions or may inspect the supplier's documentation when this is available.

Type, sample and, if required, routine tests shall also include verification of materials to ensure that they are in accordance with contract drawings and documents. This verification shall normally be carried out by the purchaser inspecting the supplier's documentation relating to material specifications, certificates of conformity or other quality documentation.

The total mass of the spacer complete with all its components shall comply with the mass shown on the contract drawing (within given tolerances).

7.3 Corrosion protection test

7.3.1 Hot dip galvanized components (other than stranded galvanized steel wires)

Hot dip galvanized components other than stranded galvanized steel wires shall be tested in accordance with the requirements specified in: ISO 1461.

The coating thicknesses shall conform to Tables 3 and 4 unless otherwise agreed between purchaser and supplier. However, for the purpose of this document, Tables 3 and 4 of ISO 1461:2009 shall apply to the following categories of items (and not to the categories specified in ISO 1461).

Table 3 of ISO 1461:2009: coating thickness on all samples except:

– washers;
– threaded components;
– small parts which are centrifuged (significant surface area < 1 000 mm^2).

Licensed copy: Sukanya Arayangkoon, The Electricity Generating Authority of, Version correct as of 01/12/2020

Table 4 of ISO 1461:2009 coating thickness on

– washers;
– threaded components;
– small parts which are centrifuged (significant surface area < 1 000 mm^2).

7.3.2 Ferrous components protected from corrosion by methods other than hot dip galvanizing

Ferrous components protected from corrosion by methods other than hot dip galvanizing shall be tested in accordance with the requirement of the relevant IEC/ISO standards, as agreed between purchaser and supplier.

7.3.3 Stranded galvanized steel wires

Stranded galvanized steel wires shall be tested in accordance with the requirements specified in IEC 60888.

7.3.4 Corrosion caused by non-metallic components

By agreement between purchaser and supplier, evidence of non-corrosion compatibility between the elastomer and the conductor or spacer components, as appropriate, shall be demonstrated by a corrosion test or by suitable service experience. Alternatively, and where appropriate, the purchaser may specify for each subassembly containing an elastomer, a range of electrical resistance which provides adequate conductivity for electrical charging but minimizes galvanic action.

NOTE Non-metallic components, especially elastomeric elements lining a spacer clamp or providing the flexibility and damping in a spacer damper, are commonly made electrically conducting to avoid any problems that might otherwise arise from the capacitive charging of the arms or body of the spacer. Carbon is frequently used in elastomer formulations, both to achieve the desired stiffness and damping, and to provide electrical conductivity. Some constituents of the non-metallic components, such as chlorides, free sulphur, etc., may have corrosion effects.

The combination of the nature of the rubber, the pollution and the electrolyte are responsible for a corrosion process.

7.4 Non-destructive tests

The purchaser shall specify or agree to relevant test methods (ISO or other) and acceptance criteria. Examples of non-destructive tests are as follows:

– magnetic test;
– eddy current test;
– radiographic test;
– ultrasonic test;
– proof load test;
– dye penetrant test;
– hardness test.

7.5 Mechanical tests

7.5.1 Clamp slip tests

7.5.1.1 General

The tests shall be performed using the conductor for which the clamps are intended. The conductor shall be "as new", i.e. free of any deterioration or damage. The minimum length of the test conductor between its terminating fittings shall be 4 m. The conductor shall be tensioned to 20 % of its rated tensile strength before the installation of the clamps to be tested.

Licensed copy: Sukanya Arayangkoon, The Electricity Generating Authority of, Version correct as of 01/12/2020

Clamps shall be installed on an unused portion of conductor for each test.

Precautions shall be taken to avoid birdcaging of the conductor.

The clamps shall be tested individually. The clamp shall be installed in accordance with the supplier's instructions. In the case of breakaway bolts or break away caps, the breakaway portion shall be removed and the torque has to be applied to the lower head with a calibrated torque wrench.

The installation torque shall be the nominal break away torque minus the tolerance as specified by the supplier.

The use of other conductor, conductor lengths and tensions can be agreed between purchaser and supplier.

7.5.1.2 Longitudinal slip test

By means of a suitable device (i.e. Figure 1), a load coaxial to the conductor shall be applied to the clamp.

The load shall be gradually increased (not faster than 100 N/s) until it reaches the following values, unless otherwise agreed between purchaser and supplier.

– 4,0 kN for metal to metal clamps (except helical fixation);
– 1,5 kN for rubber/elastomer-lined clamps;
– 1,5 kN for clamps with helical fixation.

This load shall be kept constant for 60 s

To detect slippage colour marks shall be fixed at the interface of the clamp and conductor respectively and at the end of helical rods, if used. Other methods are also permitted if agreed between purchaser and supplier.

Then the load shall be gradually increased until slippage of the clamp occurs.

Slippage shall be considered as having occurred when the pulling force cannot be increased or the movement of the clamp on the conductor is

– 2 mm for metal to metal clamp;
– 5 mm for rubber lined clamp;
– 15 mm for clamps with helical fixation.

For type test only, an additional slip test taking into account the creeping behaviour of the conductor shall be performed.

A new clamp shall be fixed (according to 7.5.1.1) on the conductor which is tensioned to 20 % of RTS. Then the tension shall be gradually increased (not more than 100 N/s) to 40 % of conductor RTS and kept for 2 h at this tension load.

It is permitted to fix several clamps on the same setup to reduce expenditure of time. The distance between the clamps shall be at least 300 mm.

Afterwards the tension shall be gradually decreased to 20 % of conductor RTS and the slip test shall be repeated.

Licensed copy: Sukanya Arayangkoon, The Electricity Generating Authority of, Version correct as of 01/12/2020

- Acceptance criteria

No slippage shall occur at or below 4 kN for metal/metal clamps and 1,5 kN for rubber lined clamp and clamps with helical fixation. If both minimum and maximum slip requirements are stated, the slip shall occur between those values. Very small surface flattening of the outer strands of the conductor is acceptable.

If armor rods are used under the clamps, slippage of the armor rods relative to the conductor is considered as clamp slippage.

For clamps with helical fixation, relative displacement up to 15 mm in the interface of clamp and helical rods, when the load is reached, is acceptable. The relative displacement shall not increase during the 60 s at constant load. There shall not be any relative movement at the end of helical rods.

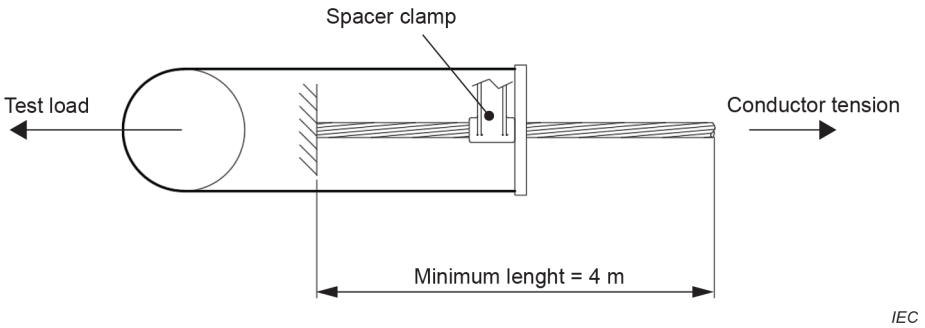

Figure 1 – Test arrangements for longitudinal slip tests

a) Longitudinal slip test for high temperature conductors (HTC)

Use the same set-up parameters as for standard conductors (7.5.1.1).

After installing the clamp at ambient temperature, the conductor shall be electrically heated up to the maximum continuous operating temperature as specified by the conductor manufacturer and kept constant at this temperature for 0,5 h.

The tension load shall be kept constant at 20 % of RTS of the used conductor.

Then the slip test shall be performed as for standard conductors, at the maximum continuous operating temperature.

For the type test, an additional thermal process of the conductor shall be performed.

A new clamp shall be fixed (according to 7.5.1.1) at ambient temperature on the conductor which is tensioned to 20 % of RTS. It is permitted to fix several clamps on the same setup to reduce expenditure of time. The distance between the clamps shall be at least 300 mm.

Then the conductor shall be electrically heated up to the maximum continuous operating temperature as specified by the conductor manufacturer and kept constant at this temperature for 1 h.

Afterwards, the temperature shall decrease to at least ambient temperature plus 5 °C. These cycles shall be carried out four times. At the end of the fourth cycle, after decreasing the temperature to ambient values the longitudinal slip test shall be performed. For the complete test run the tension shall be kept constant at 20 % of rated tensile strength.

Licensed copy: Sukanya Arayangkoon, The Electricity Generating Authority of, Version correct as of 01/12/2020

- Acceptance criteria for not annealed conductor wires:

No slippage shall occur at or below 2,5 kN for metal/metal clamps and 1 kN for rubber lined clamps and clamps with helical fixation. If minimum and maximum slip values are specified, the slip shall occur between those values. Very small surface flattening on the outer strands of the conductor is acceptable.

- Acceptance criteria for annealed conductor wires:

No slippage shall occur at or below 1,5 kN for metal/metal clamps and 0,5 kN for rubber lined clamps and clamps with helical fixation. If minimum and maximum slip values are specified, the slip shall occur between those values. Very small surface flattening on the outer strands of the conductor is acceptable.

7.5.1.3 Torsional slip test

This test is applicable for metal to metal clamps, rubber lined clamps and helical fixation.

The spacer clamp shall be installed in accordance with the supplier's instruction.

To limit the torsion flexibility of the conductor, rigid clamps have to be installed at both sides of the tested spacer clamp (Figure 2). The free length of conductor between specimen and fixing clamps should be at least 1x spacer clamp width.

A torque (see Figure 2) shall be applied to the clamps in order to rotate it around the axis of the conductor. The torque shall be gradually increased until it reaches the specified minimum slip torque.

The minimum slip torque should correlate with the minimum longitudinal slip load according 7.5.1.1 (4kN for metal/metal clamps, 1.5 kN for rubber/elastomer lined clamps).

The adequate torsion slip torque can be calculated as follows:

$$M = \frac{d}{2} F_{slip}$$

where

M is the calculated torque (Nm);

F_{slip} is the specified longitudinal slip load according to 7.5.1.1 (N);

d is the conductor diameter (m).

This torque shall be kept constant for 60 s. Then the torque shall be gradually increased until slippage of the clamp by torsion occurs. The slip torque value shall be recorded.

Clamp slip shall be considered as having occurred when a permanent slip value greater than one strand diameter is measured.

- Acceptance criteria

No slippage shall occur at or below the calculated torsion slip torque M.

Very small surface flattening on the outer strands of the conductor is acceptable.

For type test only, an additional slip test taking into account the creeping behaviour of the conductor shall be performed.

A new clamp shall be fixed (according to 7.5.1) on the conductor which is tensioned to 20 % of RTS. Then the tension shall be gradually increased (not more than 100 N/s) to 40 % of conductor RTS and kept for 2 h.

It is permitted to fix several clamps on the same setup to reduce expenditure of time. The distance between the clamps shall be at least 300 mm.

Afterwards the tension shall be gradually decreased to 20 % of conductor RTS and the torsion slip test shall be repeated.

- Acceptance criteria:

No slippage shall occur at or below the minimum specified value.

Very small surface flattening on the outer strands of the conductor is acceptable.

a) High Temperature Conductor (HTC)

Use the same set-up parameters as for standard conductors (7.5.1).

After installing the clamp at ambient temperature, the conductor shall be electrically heated up to the maximum continuous operating temperature as specified by the conductor manufacturer and kept constant at this temperature for 0,5 h.

Then the torsion slip test shall be carried out in the same way than for standard conductors, at the maximum continuous operating temperature.

- Acceptance criteria:

No slippage shall occur at or below the minimum specified value.

Very small surface flattening on the outer strands of the conductor is acceptable.

For clamps with helical fixation, a slight relative displacement in the interface of clamp and helical rods, when the load is reached, is acceptable. The relative displacement shall not increase during the 60 s at constant load. There shall not be any relative movement at the end of helical rods

For the type test an additional thermal process of the conductor shall be performed.

A new clamp shall be fixed (according to 7.5.1) at ambient temperature on the conductor which is tensioned to 20 % of RTS. It is permitted to fix several clamps on the same setup to reduce expenditure of time. The distance between the clamps shall be at least 300 mm.

Then the conductor shall be electrically heated up to the maximum continuous operating temperature as specified by the conductor manufacturer and kept constant at this temperature for 1 h.

Afterwards the temperature shall decrease to at least ambient temperature plus 5 °C. These cycles shall be carried out four times. After decreasing the temperature to ambient value, the torsional slip test shall be performed in the same way than for standard conductors. For the complete test run the tension shall be kept constant at 20 % of rated tensile strength.

- Acceptance criteria:

No slippage shall occur at or below the minimum specified value.

Very small surface flattening on the outer strands of the conductor is acceptable.

Licensed copy: Sukanya Arayangkoon, The Electricity Generating Authority of, Version correct as of 01/12/2020

Licensed copy: Sukanya Arayangkoon, The Electricity Generating Authority of, Version correct as of 01/12/2020

For clamps with helical fixation, a slight relative displacement in the interface of clamp and helical rods, when the load is reached, is acceptable. The relative displacement shall not increase during the 60 s at constant load. There shall not be any relative movement at the end of helical rods.

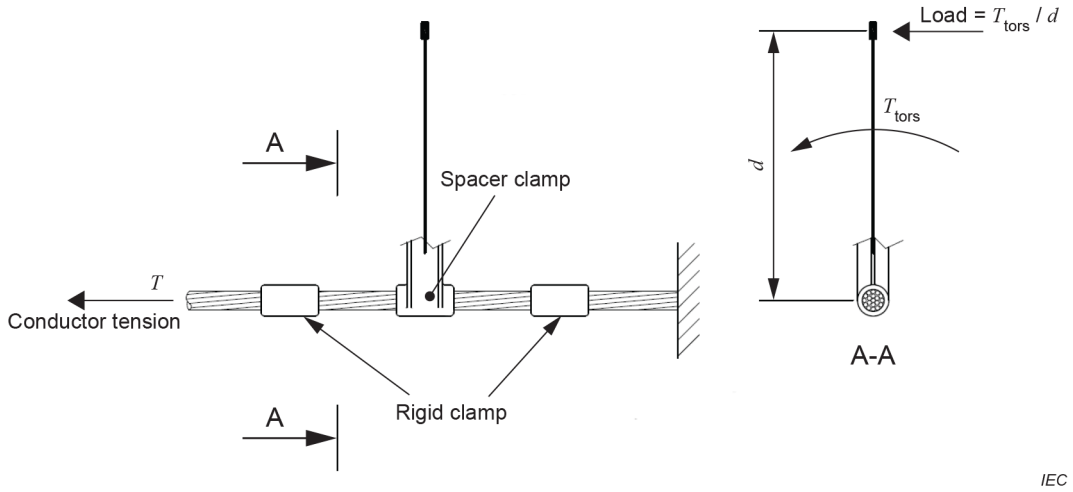

Figure 2 – Test arrangement for torsional slip tests

7.5.2 Tests on bolt sets

7.5.2.1 General

These tests are performed to ensure the proper function of all individual items used in bolted clamps.

7.5.2.2 Breakaway bolt test

The breakaway bolts or breakaway caps, if used, shall be tested by applying increasing torque to the breakaway portion of the bolt or breakaway cap until it breaks away.The test shall be carried out at ambient temperature.

Precaution shall be taken on a constant continuous circular motion and a perpendicular angle between torque wrench and bolt head.

The breakaway torque shall be recorded.

- Acceptance criteria:

The breakaway torque shall be within the tolerance agreed between the purchaser and the supplier.

If no tolerance is specified, the range shall be nominal installation torque plus/minus 10 %.

For countries where ambient temperature below 0 °C can be expected, it is recommended to repeat the tests on breakaway bolts and breakaway caps at the temperature corresponding to the average temperature of the coldest month.

The specimens shall be kept for at least 1 h in an appropriate cooling device prior the test.

During the break away test the temperature of the specimens should be measured and recorded. The temperature during the test shall not increase more than 10 °C from initial cooling temperature.

Licensed copy: Sukanya Arayangkoon, The Electricity Generating Authority of, Version correct as of 01/12/2020

7.5.2.3 Embrittlement tests on conical washers

First, a spring force test shall be carried out at room temperature on 3 specimens to assess the resilience of the washers. The washers shall be installed individually in a bolt used in the spacer damper under test and tightened 10 % above the specified installation torque, as shown in Figure 3. The assembly shall be placed in an appropriate test device and the reaction force and the deflection of the washers shall be recorded.

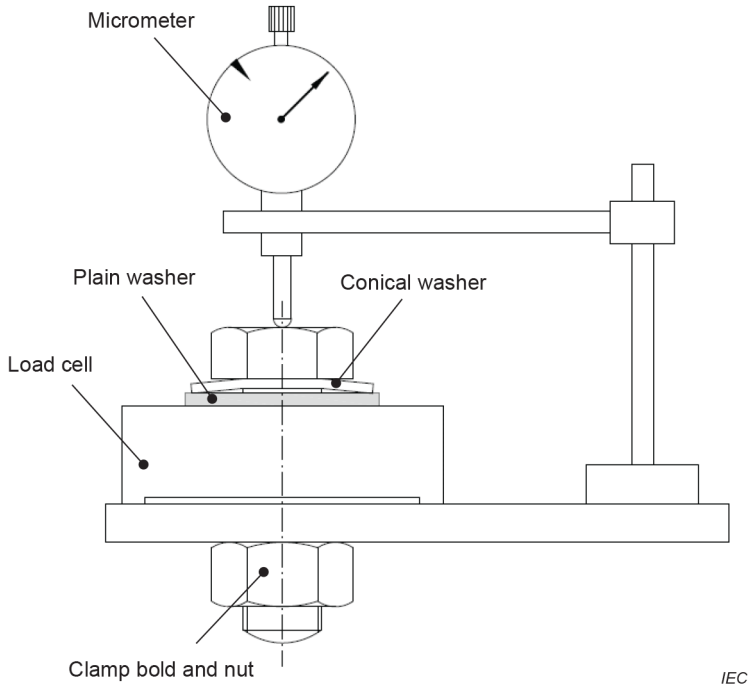

Figure 3 – Test arrangement for the spring force test at room temperature

Second, a permanent load test shall be performed.

At least 10 unused conical spring washers shall be installed with alternating orientation on a bolt used in the spacer damper under test or if necessary on a longer bolt of the same type. The bolt shall be tightened 10 % above the specified installation torque of the spacer.

The conical spring washers shall be separated from one another by a plain washer with a hardness of at least 300 HV, as shown in Figure 4.

The test arrangement shall then be stored at a constant temperature of at least -20 °C (±2 °C) for 24 h.

After the test assembly has warmed up to ambient temperature and visually inspected, it will be dismantled.

The spring force test at room temperature shall be repeated after the storage at low temperature on 3 conical spring washers and the results compared with the initial recorded reaction force of the washers.

- Acceptance criteria:

No cracks shall occur during the low temperature test period.

The reaction force of the washers, after storage at low temperature, shall be at least 90 % of the reaction force initially recorded at the same deflection.

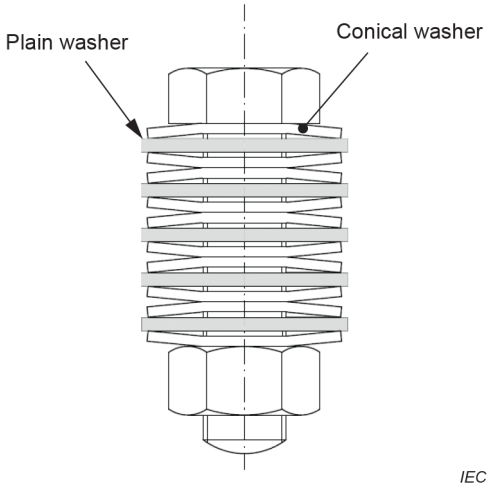

Figure 4 – Test arrangement for permanent load test on conical washers

7.5.2.4 Clamp bolt tightening test

The test shall be performed by installing the clamp on a piece of the actual conductor. In case not available, an equivalent conductor or a tube of same diameter can be used. The bolts or nuts shall be tightened to a torque 10 % above the specified installation torque with a calibrated torque wrench. Clamps with breakaway bolts or breakaway caps shall have the breakaway portion of the head removed prior to the test and shall be tightened 10 % above the specified installation torque.

- Acceptance criteria

The threaded connection shall remain serviceable (by hand) for 3 subsequent installations and removals and all components of the clamp shall be without any mechanical deformation or cracks. No plastic deformation shall occur to the conductor inside the clamp.

Lastly, the torque shall be increased to either twice the specified installation value or the maximum torque value recommended by the bolt supplier, whichever is lower. This increase shall not result in any breakage of threaded parts or other components of the clamp or any cracks. The bolt(s) shall be able to be removed from the spacer without any failure.

Plastic deformation is permitted.

7.5.3 Simulated short-circuit current test and compression and tension tests

7.5.3.1 General

The purpose of these tests is to ensure that the spacers will be able to withstand, without failure or permanent deformation, the compressive and tensile load which may occur in service.

The purchaser shall specify or agree to one of the following tests, or any combination of tests.

NOTE The effects imposed by the loads in the different tests, or combination of tests, are not necessarily equivalent.

7.5.3.2 Simulated short-circuit current test

Suitable devices (see Figure 5) which are able to apply compressive forces (directed toward the centre of the conductor bundle) and tensile forces (directed away from the centre of the conductor bundle) to all spacer clamps simultaneously shall be used.

Licensed copy: Sukanya Arayangkoon, The Electricity Generating Authority of, Version correct as of 01/12/2020

Licensed copy: Sukanya Arayangkoon, The Electricity Generating Authority of, Version correct as of 01/12/2020

Variant A: Test device using mechanical means other than a simulated conductor. Possible methods include the use of pulleys, pneumatic cylinders, or hydraulic cylinders. See Figure 5a for a possible example setup.

Variant B: Setup with conductors or wires to simulate span conditions in the field using a tensile testing machine. The yoke plates shall be shaped in relation to the type of spacer under test.

The line angles α (alpha) are typically between 77° to 80° (Figure 5b and Figure 5c).

The tensile load F can be calculated as follows:

Compression test: $$F = \frac{n}{2} F_{compr} \tan \alpha_c$$

Tension test: $$F = \frac{n}{2} F_{tens} \tan \alpha_t$$

where

F is the tensile load (N);

n is the number of sub conductors;

α_c is the line angle measured between conductor and spacer during compression (°);

α_t is the line angle measured between conductor and spacer during tension (°);

F_{compr} is the calculated compression load according to Annex B (N);

$$F_{tens} = \frac{1}{2} F_{compr}$$

Compression:

Metal to metal clamps and rubber lined clamps shall be fixed according to suppliers' instruction. The compressive force shall be gradually increased until it reaches the test value which is calculated using the formula given in Annex B. At this value the forces shall be held constant for 60s and then removed.

The test shall be executed twice; the first one with the spacer in its normal position, the second one, applicable to flexible spacer and spacer damper only, with a clamp displaced 25 mm longitudinally, with reference to the other clamp(s).

Tension:

Following the compressive force, the tensile force shall be applied. This value shall be gradually increased until it reaches 50 % of the compressive force.

This force shall be kept constant for 60 s and then removed.

- Acceptance criteria

After the test,

– it shall be possible to return the spacer clamps to their design position using only slight hand pressure;

– the spacer shall be examined; if necessary, the spacer shall be disassembled. There shall be no deformation or damage which would impair the efficiency of the spacer or affect its function of maintaining the normal bundle spacing.

Licensed copy: Sukanya Arayangkoon, The Electricity Generating Authority of, Version correct as of 01/12/2020

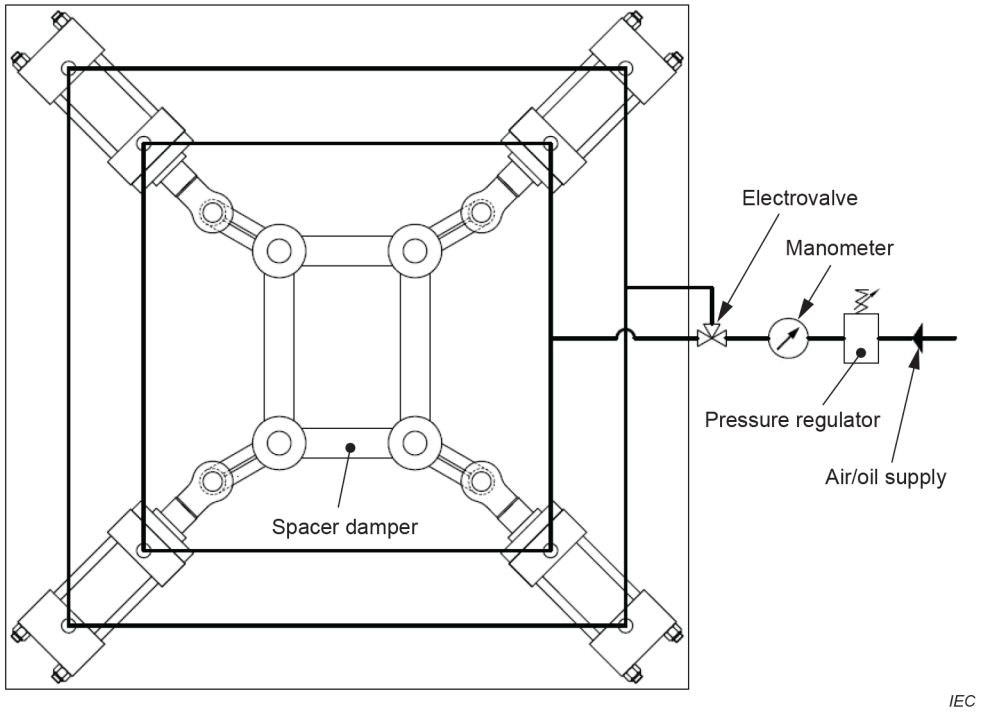

Figure 5a – Example of test device used in Variant A

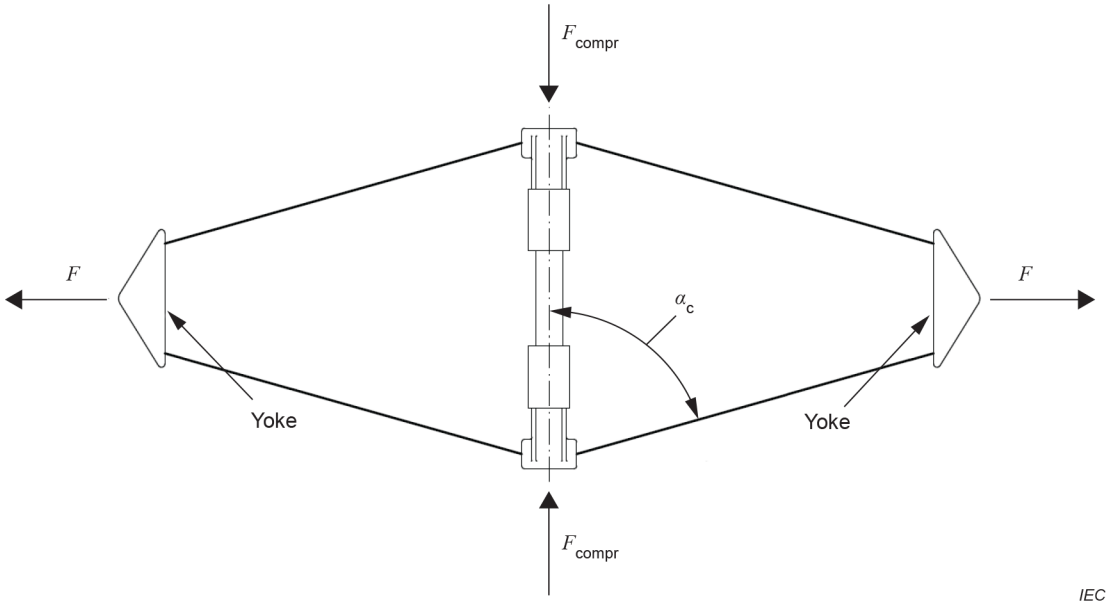

Figure 5b – Variant B (compression)

Licensed copy: Sukanya Arayangkoon, The Electricity Generating Authority of, Version correct as of 01/12/2020

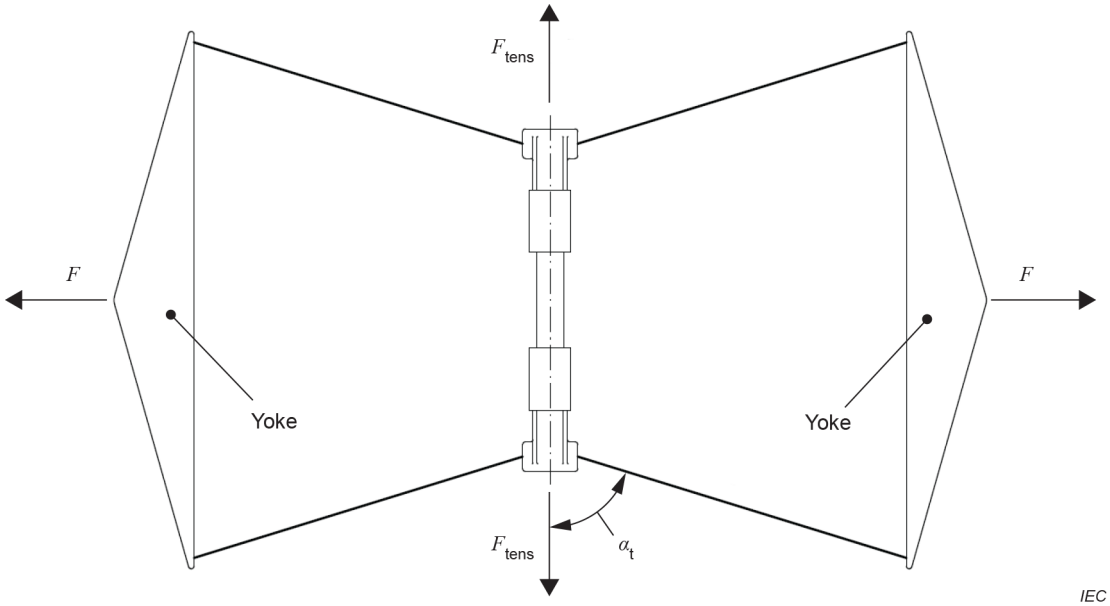

Figure 5c – Variant B (tension)

Figure 5 – Test arrangements for simulated short-circuit current tests

7.5.3.3 Compression and tension test

For twin spacers this test is covered by the simulated short circuit test (7.5.3.1).

The spacer assembly shall be installed on a suitable device (see Figure 6a) able to apply compression and tension forces between each pair of adjacent clamps.

The clamp bolts, when used, shall be tightened according to supplier's instruction.

Helical, used for fixation, should be replaced by an appropriate mechanical fixation.

For each pair of adjacent clamps, the compressive force shall first be applied. The force shall be gradually increased until it reaches the calculated compression force which shall be maintained for 60 s. Then the compressive force shall be removed and the tensile force, corresponding to 50 % of the compressive force, shall be applied to the same pair of clamps and held for 60 s.

The centripetal compressive force for triple, quad and hexagonal bundle configurations shall be calculated using the formula given in Annex B.

Only the components of the calculated centripetal short circuit forces are applied between two adjacent clamps (Figure 6b).

Helical fixation clamps:

To prove the mechanical strength of the system clamp helical/rod of helical fixation clamps a separate tension test (see Figure 6c) shall be performed.

The conductor shall be simulated by a piece of tube having the same diameter than the conductor. The distance" L" between the two attachment points beside the spacer clamp (see Figure 6c) should be at least 500 mm.

The tensile force, correlating to 50 % of the compressive force, shall be applied to a pair of clamps and held for 60 s.

Licensed copy: Sukanya Arayangkoon, The Electricity Generating Authority of, Version correct as of 01/12/2020

Then the load shall be released.

- Acceptance criteria

After the test,

– it shall be possible to return the spacer clamps to their design position using only slight hand pressure;

– the spacer shall be examined; if necessary, the spacer shall be disassembled. There shall be no deformation or damage which would impair the efficiency of the spacer or affect its function of maintaining the normal bundle spacing.

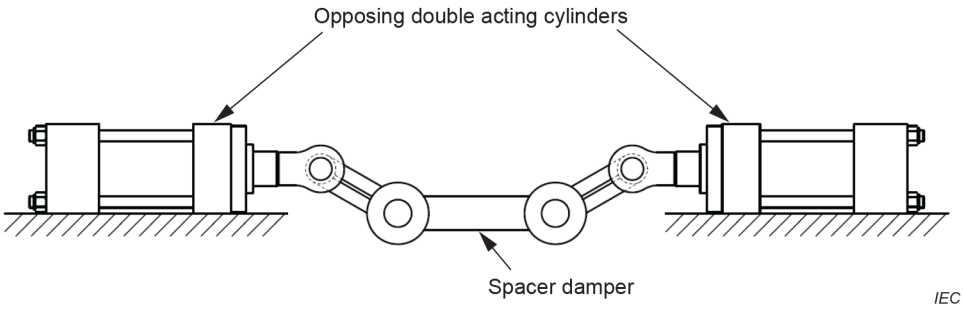

Figure 6a – Example of device for compression and tension test

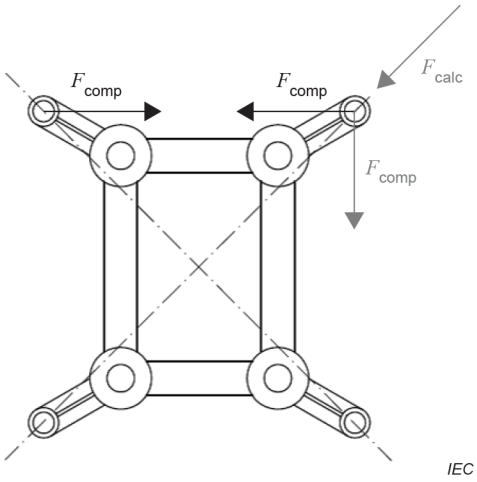

Figure 6b – Application of centripetal force component

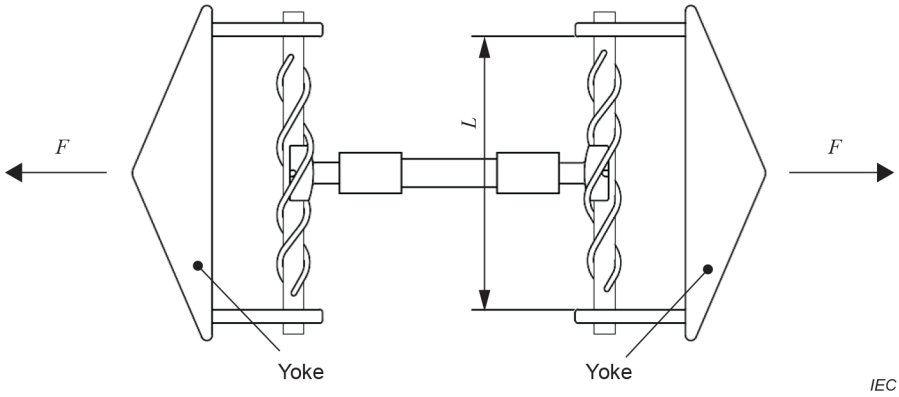

Figure 6c – Example of device for tension test of helical fixation clamps

Figure 6 – Test arrangements for compression and tension test

Licensed copy: Sukanya Arayangkoon, The Electricity Generating Authority of, Version correct as of 01/12/2020

Licensed copy: Sukanya Arayangkoon, The Electricity Generating Authority of, Version correct as of 01/12/2020

7.5.4 Characterisation of the elastic and damping properties

Tests to determine the elastic and damping properties of spacer dampers shall be performed in accordance with one or more of the following methods as specified or agreed by the purchaser.

NOTE 1 The stiffness and damping values do not provide direct confirmation of the performance of spacer dampers installed on conductor bundles, but they can be used in analytical models used to provide indication of performance, particularly with regard to aeolian vibration.

The stiffness and damping values determined in type tests can be used to establish acceptance criteria for sample tests as specified or agreed by the purchaser.

The elastic and damping characteristics determined in the following different tests are not equivalent.

a) Stiffness-damping method

The test shall be carried out at room temperature (20 ± 5 °C), the temperature shall be reported. The specimens shall be kept in room temperature prior the test for at least 3 h.

The frame of the spacer shall be fixed securely and a rigid tube or rod shall be securely held in one of the spacer clamps. The tube/rod shall be oscillated (see Annex C) such that the angle of deflection of the spacer arm from its unloaded position follows a sinusoid, i.e.

$$\varphi = \Phi \sin \omega t$$

where

φ is the angle of deflection;

Φ is the peak value of deflection selected for the measurement.

The peak force F required to oscillate the spacer arm through the angle measurement $\pm\Phi$ shall be determined (measured at approximately 90° to the arm axis in the plane of the spacer and passing through the centre of the clamp).

The phase angle, α, between the force and arm deflection angle shall also be determined.

If necessary the arm oscillation shall be maintained for a period long enough to stabilize the temperature of the damping element(s) before measuring F and α.

The angle α may be measured directly by comparing the force and arm angle wave forms. It may also be determined indirectly by measuring the area of the hysteresis loop formed by displaying the force and arm angle deflection in X-Y form. In this case α can be calculated as follows:

$$\alpha = \arcsin \frac{E}{F\ l\ \pi\ \Phi}$$

where

α is the phase angle between arm deflection and force (rad);

E is the area of the moment/angular deflection loop (J);

F is the peak force (N);

l is the arm length measured between clamp centre and effective frame/arm pivot point (m);

Φ is the peak arm deflection (rad).

The test shall be carried out at a frequency between 1 Hz and 2 Hz with a peak-to-peak displacement equivalent to the diameter of the conductor for which the clamp is intended to be used.

NOTE 2 Tests at a variety of frequencies and/or displacements can be used to characterize spacer dampers for computer programs.

From the measurements of F and α, the torsional stiffness K_t and the damping constant H_t shall be calculated as follows:

$$K_t = \frac{F\ l \cos\alpha}{\Phi} \qquad \text{(Nm/rad)}$$

$$H_t = K_t \tan\alpha \qquad \text{(Nm/rad)}$$

1) High Temperature Conductor (HTC)

Use the same set-up parameters as for standard conductors.

One spacer damper clamp shall be installed on a length of High Temperature Conductor which will heat up to its maximum continuous operating temperature. This temperature shall be kept constant (±5 °C) for 2 h.

Shortly before the end of the heating cycle the temperature of the damping elements shall be measured and recorded.

The stiffness damping method shall be performed with the elastomer damping element kept at the previously measured temperature (±10 °C).

- Acceptance criteria
  - The torsional stiffness K_t shall not differ by more than ±20 % from the values declared by the supplier for the ambient temperature and for the maximum operating temperature respectively.
  - The ratio H_t/K_t shall not be lower than 20 % of the values declared by the supplier for the ambient temperature and for the maximum operating temperature respectively.

b) Stiffness method

The test shall be carried out at room temperature (20 ± 5 °C), the temperature shall be reported. The specimens shall be kept in room temperature prior the test for at least 3 h.

– the spacer shall be held (preferably in its working orientation) by two adjacent clamps installed on horizontal rods which are free to rotate;

– one rod shall be held in position and a force shall be applied to the other rod just sufficient to move the clamp arms to their stops in tension, i.e. the spacing shall have been increased from X_{nom} to X_{max} which shall be recorded;

– the above shall be repeated for the arms in compression for X_{min} to be recorded;

– spacings X_t and X_c shall then be determined, where

Licensed copy: Sukanya Arayangkoon, The Electricity Generating Authority of, Version correct as of 01/12/2020

$$X_t = X_{nom} + 0,9\left(X_{max} - X_{nom}\right)$$
$$X_c = X_{nom} - 0,9\left(X_{nom} - X_{min}\right)$$

– The spacer arms shall then be moved in the following cycle:

- starting at X_{nom} the spacing shall be increased to X_t at a uniform rate between 50 mm/min and 100 mm/min;
- the spacing shall be held at X_t and after 60 s the force F_t required to hold this spacing shall be recorded;
- the spacing shall then be decreased at a uniform rate between 20 mm/min and 50 mm/min until the spacing is again equal to X_{nom};
- after holding the spacing at X_{nom} between 0 s and 20 s, the spacing shall be decreased to X_c at a uniform rate between 50 mm/min and 100 mm/min;
- the spacing shall be held at X_c and after 60 s the force F_c required to hold this spacing shall be recorded;
- the stiffness shall then be determined as $\frac{F_t + F_c}{X_t - X_c}$.

To illustrate the above, assume that the test is carried out on a 400 mm twin spacer which has stops at spacings of 420 mm and 370 mm. It will then be necessary to record the tensile force F_t (N) required to maintain a spacing of 418 mm and the compression force F_c (N) required to maintain a spacing of 373 mm. The stiffness will then be (F_t + F_c)/45 (N/mm).

1) High Temperature Conductor (HTC)

Use the same set-up parameters as for standard conductors.

One spacer damper clamp shall be installed on a length of High Temperature Conductor which will heat up to its maximum continuous operating temperature. This temperature shall be kept constant (±5 °C) for 2 h.

Shortly before the end of the heating cycle the temperature of the damping elements shall be measured and recorded.

The stiffness method shall be performed with the elastomer damping element kept at the previously measured temperature (±10 °C)

- Acceptance criteria

The stiffness shall not differ by more than ±20 % from the values declared by the supplier for the ambient temperature and for the maximum operating temperature respectively.

c) Damping method

The test shall be carried out at room temperature (20 ± 5 °C), the temperature shall be reported. The specimens shall be kept in room temperature prior the test for at least 3 h.

The damping characteristic shall be determined as follows.

The body of the spacer shall be fixed rigidly, and a mass shall be added to one arm such that the natural frequency of oscillation is between 1 Hz and 2 Hz. The arm shall then be moved to one of the end stops and, after 1 min, suddenlay released. The movement of the arm shall be recorded for at least two complete cycles. If the initial swing (from starting position to maximum deflection in the opposite direction) is Y_1 (see Figure 7) and subsequent swings (peak to peak) are Y_2, Y_3, Y_4, the log decrement shall be taken to be equal to

Licensed copy: Sukanya Arayangkoon, The Electricity Generating Authority of, Version correct as of 01/12/2020

$$\ln\left[\frac{1}{2}\left(\frac{Y_1}{Y_3}+\frac{Y_2}{Y_4}\right)\right]$$

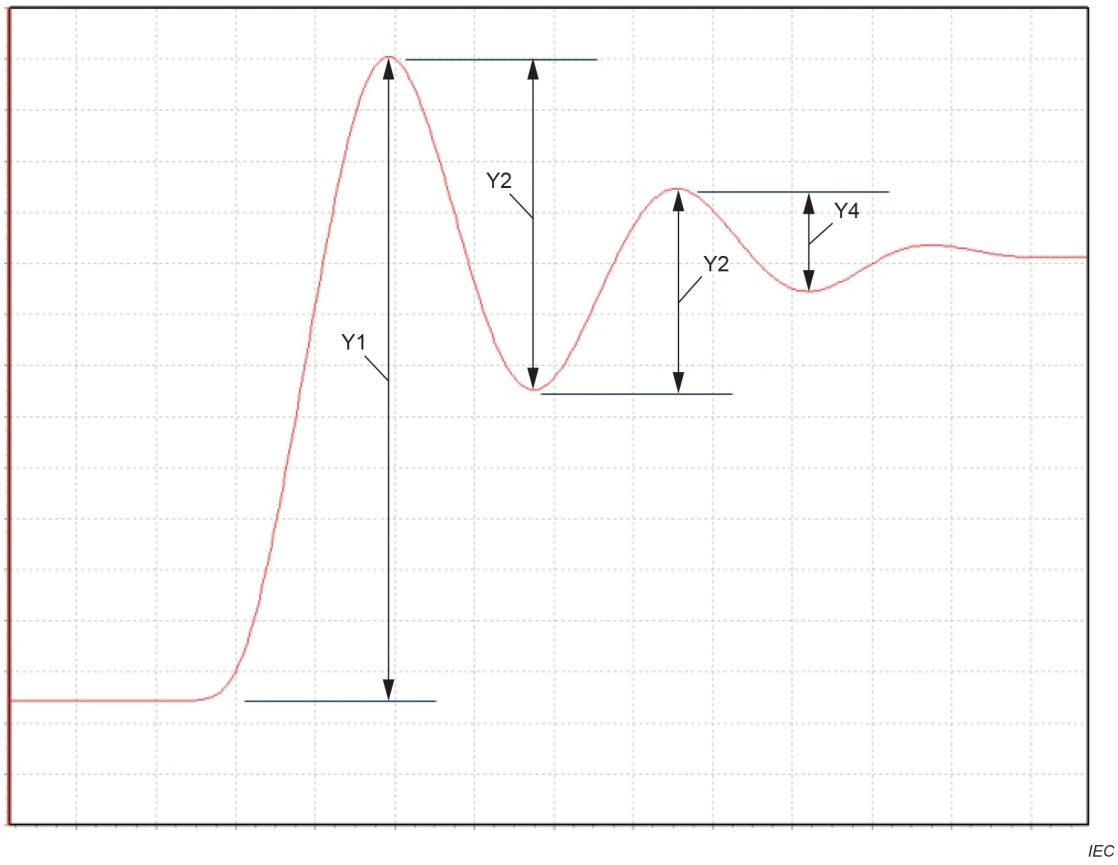

Figure 7 – Typical logaritmic decrement graph

This definition is different to the conventional one $\frac{1}{n}\ln\frac{A_0}{A_n}$ but is less sensitive to measurement error and does not require the zero deflection position to be determined.

The length and mass of the pendulum shall be recorded.

1) High Temperature Conductor (HTC)

Use the same set-up parameters as for standard conductors.

One spacer damper clamp shall be installed on a length of High Temperature Conductor which will heat up to its max continuous operating temperature. This temperature shall be kept constant (±5 °C) for 2 h.

Shortly before the end of the heating cycle the temperature of the damping elements shall be measured and recorded.

The damping method shall be performed with the elastomer damping element kept at the previously measured temperature (±10 °C)

- Acceptance criteria

Licensed copy: Sukanya Arayangkoon, The Electricity Generating Authority of, Version correct as of 01/12/2020

Licensed copy: Sukanya Arayangkoon, The Electricity Generating Authority of, Version correct as of 01/12/2020

The log decrement shall not differ by more than ±20 % from the values declared by the supplier for the ambient temperature and for the maximum operating temperature respectively.

Characterization of the elastomer damping elements of spacer dampers designed for HTC (Type test only)

The characteristic of the elastomer damping element shall be verified with one of the 3 mentioned methods, heating the elastomer up to the maximum working temperature (± 5 °C) which it is designed for.

The complete spacer has to be heated in an appropriate test device (i.e. oven, climate chamber) for at least 2 h.

The temperature shall be taken at the spacer arm, close to the elastomer element.

The test shall be repeated at a temperature corresponding to 75 % and 50 % of the maximum working temperature of the damping element.

7.5.5 Flexibility tests

The purpose of these tests is to ensure and prove that the spacer damper or flexible spacer will accommodate any expected relative movement or displacement of the subconductors, during the normal working life of the line, without damage to conductors or the spacer.

The spacer shall be installed on a length of an appropriate bundle tensioned at 20 % of its rated tensile strength, tightening the clamp bolts to the specified installation torque. As an alternative, the spacer may be installed on rods or tubes of the correct size.

The following displacements shall be applied gradually:

a) longitudinal displacement (see Figure 8): horizontal, longitudinal, parallel movement of one subconductor relative to the other(s) as measured by the deflection of the vertical long axis of the spacer from its position normal to the conductor;

b) vertical displacement (see Figure 9): vertical movement of one subconductor relative to the other(s) as measured by the vertical deflection of the horizontal axis of the spacer from its position normal to the conductor;

c) conical displacement (see Figure 10): conical or angular movement of the spacer clamp on one sub-conductor as measured conically about the subconductor axis;

d) transversal displacement (see Figure 11): relative movement of two spacer clamps horizontally aligned perpendicular to the subconductor axes, as measured by the increase and decrease of conductor separation.

The values of the displacements to be used for the tests shall be in accordance with supplier’s specified values on drawing, but should be at least:

- Longitudinal displacement: 25 mm (p-p)
- Vertical displacement: 50 mm (p-p)
- Conical displacement: 10° (cone vertex angle)
- Transversal displacement: 25 mm (p-p)

- Acceptance criteria

The above movements or displacements shall be executed without slip or damage to the subconductors (if used) and spacer, as detected by visual examination after removal of the spacer.

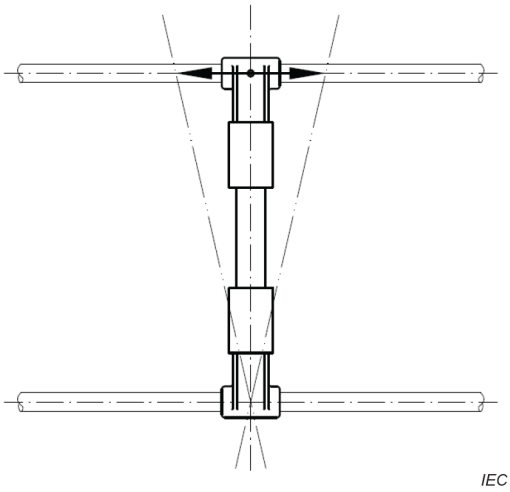

Figure 8 – Sketch of longitudinal displacement test

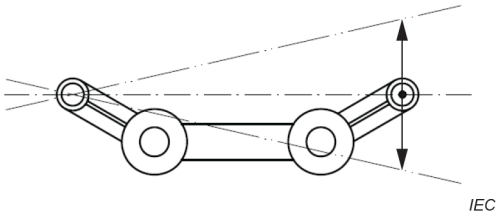

Figure 9 – Sketch of vertical displacement test

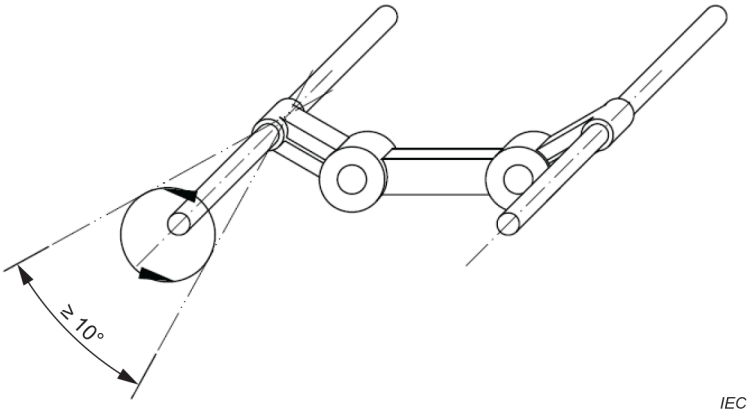

Figure 10 – Sketch of conical displacement test

Licensed copy: Sukanya Arayangkoon, The Electricity Generating Authority of, Version correct as of 01/12/2020

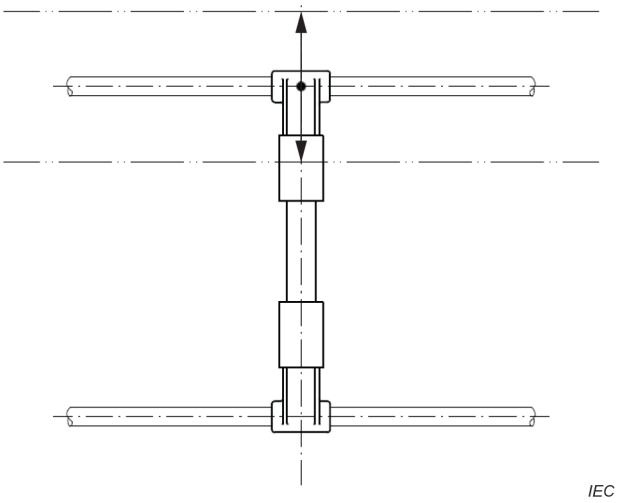

Figure 11 – Sketch of transverse horizontal displacement test

7.5.6 Fatigue tests

7.5.6.1 General

Tests shall be performed to verify the fatigue behaviour of spacers subjected to alternating motions or simulating vibrations (aeolian vibration and subspan oscillation) occurring in service.

Unless otherwise agreed between purchaser and supplier, two spacers shall be tested: one for subspan oscillation and one for aeolian vibration.

In the following test additional requirements may be agreed between purchaser and supplier to match very severe service conditions.

7.5.6.2 Subspan oscillation

The spacer shall be installed in a test rig designed to subject the spacer to oscillatory compressive/tensile forces directed between two horizontally opposite clamps (see Figure 12a).

The central frame of the spacer shall be unrestrained.

Alternatively, the frame of the spacer shall be held in a fixed position and oscillatory forces shall be applied to one clamp, approximately 90° to the arm axis (see Figure 12b).

Each clamp under test shall be installed in the middle of a length of the conductor for which the clamp is intended or alternatively on rigid tubes or rods of the same diameter. The clamp fasteners, if threaded, shall be tightened to the specified installation torque.

In case of breakaway bolts or breakaway caps the breakaway portion shall be removed and the torque has to be applied to the lower head with a calibrated torque wrench.

The installation torque shall be the nominal break away torque minus the tolerance as specified by the supplier.

The above tube(s) or rod(s) shall be connected to the drive mechanism.

Clamps with rod attachment shall be installed on a rigid tube or rod having the same diameter as the conductor for which the clamp is intended to be used.

Licensed copy: Sukanya Arayangkoon, The Electricity Generating Authority of, Version correct as of 01/12/2020

Licensed copy: Sukanya Arayangkoon, The Electricity Generating Authority of, Version correct as of 01/12/2020

The test shall be performed in one of the following two ways:

– either with a displacement resulting from the application of a sinusoidal initial force having a peak-to-peak value of 600 N. The displacement shall be determined at the beginning of the test and shall be kept constant during the duration of the test.

– or with a clamp displacement or an arm rotation equal to 90 % of the maximum allowed by the spacer construction.

The test shall be carried out at a frequency between 1 Hz and 2 Hz for 10 million (10^7) cycles.

- Acceptance criteria

At the end of the test, the phase angle α (as determined in 7.5.4 a) and the force required to maintain the horizontal displacement shall not be less than 70 % of their initial value. There shall be no deterioration in the metal components of the spacer, and the residual tightening torque of the clamp fastener (if threaded) shall not be less than 50 % of the original value (i.e. half the specified installation torque).

The residual tightening torque (RTT) is measured by means of a torque wrench which is applied to the bolt and operated in the tightening sense. The RTT value is read on the torque wrench when the bolt begins to move.

After the test, the spacer shall be dismantled and the damping elements shall be visually investigated. There shall be no cracks visible.

In case of helical fixation there should be no abrasion of the clamp or the rods and no looseness between the clamp body and the rods.

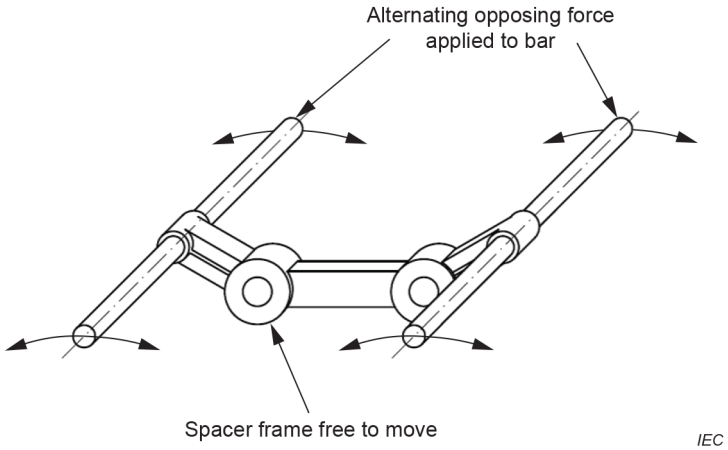

Figure 12a – Spacer frame free to move

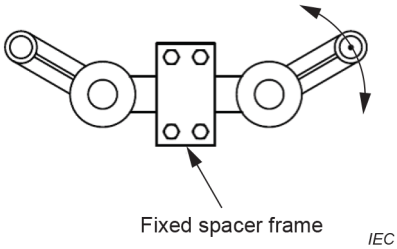

Figure 12b – Spacer frame fixed

Figure 12 – Test arrangements for subspan oscillation tests

Licensed copy: Sukanya Arayangkoon, The Electricity Generating Authority of, Version correct as of 01/12/2020

7.5.6.3 Aeolian vibration

The frame of the spacer shall be fixed in a position as in service and a spacer clamp shall be connected by a hinge to the drive mechanism of a shaker (see Figure 13a). The clamp fasteners (if threaded) shall be tightened to the specified installation torque.

In case of breakaway bolts or breakaway caps these items shall be removed and the bolt shall be tightened with a calibrated torque wrench. The installation torque shall be the nominal break away torque minus the tolerance range, as specified by the supplier.

Clamps for helical fixation shall be fixed by the use of the helical rods over a tube or rod, having the same diameter of the conductor for which the spacer is designed; if possible, the length of the rods can be shortened. The distance between the two attachment points beside the spacer clamp (see Figure 13b) should be at least 500 mm.

The tube or rod shall be connected to the driving mechanism of a shaker. A frequency range of 20 Hz to 40 Hz shall be covered. Any automatic sweep rate not exceeding 0,2 decade/min in the case of logarithmic sweep, and 0,5 Hz/s in the case of linear sweep, can be used. The shaker velocity shall be held constant at 0,1 m/s (0-p). The spacer shall be vibrated for 100 million (10^8) cycles.

- Acceptance criteria

At the end of the test the shaker force required to maintain the shaker velocity of 0,1 m/s (0-p) at 20 and 40 Hz, shall be not less than 70 % of the initial value, there shall be no deterioration in the metal component of the spacer, and the residual tightening torque of the clamp fastener (if threaded) shall be not less than 50 % of the original value (i.e. half the specified installation torque).

At the end the spacer shall be dismantled and the damping elements shall be visually investigated. There shall be no cracks visible.

In case of helical fixation there should be no abrasion of the clamp or the rods and the integral strength of the connection system shall be ensured.

Licensed copy: Sukanya Arayangkoon, The Electricity Generating Authority of, Version correct as of 01/12/2020

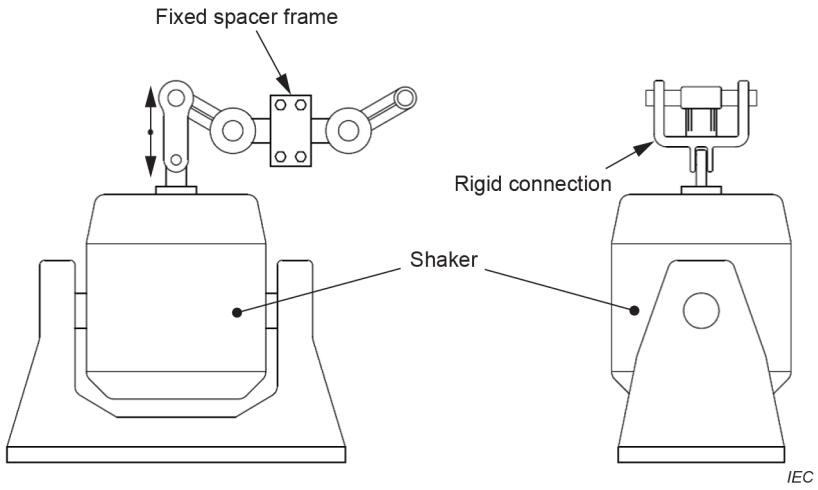

Figure 13a – Spacer clamp with fastener

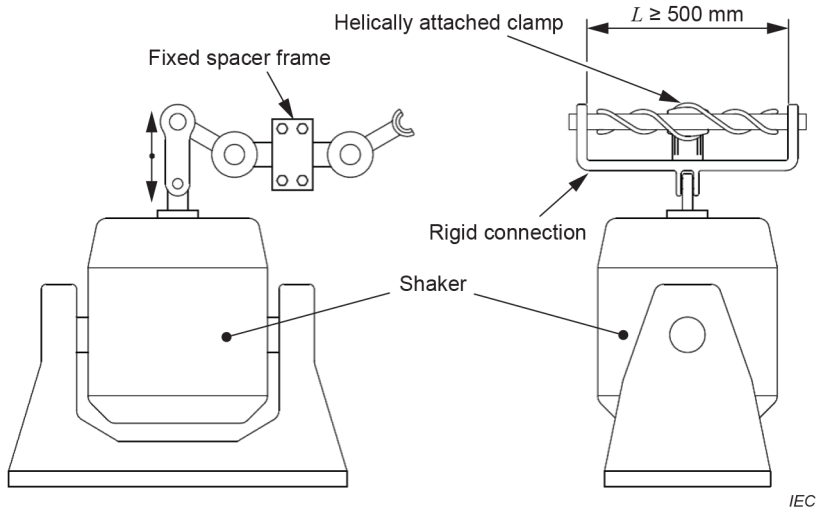

Figure 13b – Spacer clamp with helical fixation

Figure 13 – Test arrangement for aeolian vibration test

7.6 Tests to characterise elastomers

7.6.1 General

These tests shall be performed on samples taken from elastomeric components or test slabs and buttons as appropriate. These test data, along with supplier's guaranteed values, shall form the basis for acceptance of sample tests during production.

7.6.2 Tests

The tests reported in Table 2 shall be performed. The test values shall fall within the values guaranteed by the supplier.

7.6.3 Ozone resistance test

- Scope

The purpose of this test is to verify the resistance of the elastomer to the attack of ozone, universally present in the atmosphere and generated by the electrical discharges around high-voltage cables (corona).

- Test procedures

There are several test procedures covered by international standards. The test method to be used shall be agreed between purchaser and supplier. The recommended method is described in ISO 1431-1, procedure A, and the following parameters are recommended.

Ozone chamber temperature	(40 ± 2) °C
Ozone concentration	(50 ± 5) pp hm (parts per hundred million of air by volume)
Exposure time	72 h

As far as specimens are concerned, ISO 1431-1 (procedure A) prescribes thin rectangular test strips clamped at an elongation of 20 %. Alternatively, the test may be performed on finished elastomer components. The elastomer components shall be tested in their metal housing and at least one of them shall be subjected to the maximum tensile deformation allowed by the spacer design. In both cases, the elastomer under test shall be conditioned for 48 h in the dark at room temperature before being placed in the ozone chamber.

- Acceptance criteria

Ozone attack is usually evidenced by the formation of a few deep cracks or a myriad of small parallel cracks. They occur at right angles to the direction of applied stress. No cracks shall be observed at ×7 magnification on the surface of the specimens elongated or deformed as above.

Table 2 – Tests on elastomers

Recommended tests	Required value	Test methods
Room temperature tests		
– Specific gravity and density	Supplier specified range	ISO 1183-1 – ISO 2781
– Vulcanization characteristics	Supplier specified range	ISO 6502-2
– Hardness shore A	Supplier specified range	ISO 868
– Tensile properties		ISO 37
Tensile strength	Supplier specified min. value	ISO 37
Ultimate elongation	Supplier specified min. value	ISO 37
Modulus at 100 % elongation	Supplier specified min. value	ISO 37
Modulus at 300 % elongation	Supplier specified min. value	ISO 37
– Compression set 70 h, 20 °C	Supplier specified max. value	ISO 815-1
– Rebound resilience at 20 °C	Supplier specified range	ISO 4662
– Ozone resistance	To meet 7.6.3	ISO 1431-1
– Abrasion resistance	Supplier specified min. value	ISO 4649
– Tear resistance	Supplier specified max. value	ISO 34-1/34-2
– Electrical resistance	Supplier specified range	As per 7.7.2

Licensed copy: Sukanya Arayangkoon, The Electricity Generating Authority of, Version correct as of 01/12/2020

Licensed copy: Sukanya Arayangkoon, The Electricity Generating Authority of, Version correct as of 01/12/2020

Recommended tests	Required value	Test methods
High temperature tests		
– Compression set, 70 h, 100 °C	Supplier specified max. value	ISO 815-1
– Rebound resilience at 100 °C	Supplier specified range	ISO 4662
– Water immersion		ISO 1817
Volume change	Supplier specified max. value	ISO 1817
Weight change	Supplier specified max. value	ISO 1817
– Oil* conditioning 72 h, 70 °C		ISO 1817
Volume change	Supplier specified range	ISO 1817
Weight change	Supplier specified range	ISO 1817
Hardness change	Supplier specified range	ISO 1817
Tensile strength change	Supplier specified range	ISO 1817
Ultimate elongation change	Supplier specified range	ISO 1817
– Air-oven ageing, 72 h, 70 °C		ISO 188
Volume change	Supplier specified max. value	ISO 188
Weight change	Supplier specified max. value	ISO 188
Hardness change	Supplier specified max. value	ISO 188
Tensile strength change	Supplier specified max. value	ISO 188
Ultimate elongation change	Supplier specified max. value	ISO 188
Low temperature tests		
– Brittleness	Supplier specified min. value	ISO 812
– Compression set, 70 h, at minimum user service temperature	Supplier specified max. value	ISO 815-2
– Rebound resilience at minimum user service temperature	Supplier specified range	ISO 4662
– TR10 Modulus temperature	Supplier specified range	ISO 2921
* The test oil shall be specified by the purchaser.		

7.7 Electrical tests

7.7.1 Corona and radio interference voltage (RIV) tests

The tests shall be carried out according to Clause 14 of IEC 61284:1997.

7.7.2 Electrical resistance test

The purpose of the test is to verify that the conductivity of the various components is such that potential differences and current flows do not result in deterioration of spacer components or conductors.

In case of rubber lined clamp all individual clamps shall be installed according to supplier's instruction on an appropriate length of conductor.

Metal to metal clamps (including helically fixed types without liners) do not need to be fixed on a conductor.

For spacers having elastomeric elements with high electrical resistance, (> 1000 Ω) the electrical resistance of the elastomeric elements between each spacer arm and the spacer frame shall be determined by the application of 100 Vrms (±10 %) at 50 Hz/60 Hz AC and the resistance determined from Vrms/Irms.

For spacers with elastomeric clamp liners the resistance between the conductor and the spacer arm shall also be determined by the same method. The elastomeric element and clamp liners shall be free from moisture or any liquid used during the assembly when testing is performed.

For spacers having an elastomeric element with low electrical resistance, (<1 000 Ω), the electrical resistance of the spacer between each spacer arm and the spacer frame shall be determined by the application of a suitable voltage depending on the design of the spacer and agreed between purchaser and supplier.

The test shall be carried out at room temperature (20 ± 5 °C); the temperature shall be reported. The specimens shall be kept at room temperature prior the test for at least 3 h.

The arms should not be moved during conditioning and testing to avoid any stress on to the damping elements.

When conductive current paths are used and, due to special design considerations, conductive current paths do not exist between all pairs of subconductors, the resistance shall be measured between the two most remote spacer components which are supposed to be connected via a conductive path.

The test parameter and the test results shall be recorded.

- Acceptance criteria:

The resistance between the spacer arm and the central frame and between the conductor and the spacer arm in case of rubber lined clamps shall be within the range agreed between purchaser and supplier.

a) High Temperature Conductor (HTC)

Use the same set-up parameters as for standard conductors.

The electrical resistance test shall be performed with the elastomer damping element kept at the previously (7.5.4) measured temperature (±10 °C).

- Acceptance criteria:

The resistance between the spacer arm and the central frame and between the conductor and the spacer arm shall be within the range agreed between the purchaser and the supplier.

7.8 Verification of vibration behaviour of the bundle/spacer system

Criteria and tests to verify the vibration behaviour of the bundle/spacer system can be agreed between purchaser and supplier following the suggestions reported in Annex D.

Licensed copy: Sukanya Arayangkoon, The Electricity Generating Authority of, Version correct as of 01/12/2020

Annex A
(normative)

Minimum technical details to be agreed between purchaser and supplier

Reference subclause		Test option	Details to be agreed
6.2.3	Sampling and acceptance criteria	Inspection by variables	Inspection level, AQL,sampling instruction
		Inspection by attributes	Inspection level, AQL,sampling instruction
7.5.3	Simulated short-circuit test	Simulated short circuit current	Compressive force
		Compression and tension	Compressive and tensile force
7.5.4	Characterisation of the elastic and damping properties	Stiffness-damping-method	
		Stiffness method	
		Damping method	
7.7.1	Corona and radio interference voltage (RIV) tests	Voltage method	Specified corona extinction voltage
		Voltage gradient method	Specified corona extinction test voltage gradient
7.7.2	Electrical resistance test		Range of the electrical resistance

Licensed copy: Sukanya Arayangkoon, The Electricity Generating Authority of, Version correct as of 01/12/2020

Licensed copy: Sukanya Arayangkoon, The Electricity Generating Authority of, Version correct as of 01/12/2020

Annex B
(informative)

Compressive forces in the simulated short-circuit current test

To calculate the value of the compressive force, the following formula [4] may be applied, unless a different value is agreed between purchaser and supplier:

$$F_{\max} = K\, I_{cc} \sqrt{T \lg \frac{S}{D}}$$

where

$F_{\max}$ is the maximum compressive force (N);

I_{cc} is the specified short-circuit current in the bundle (I_{rms} value) (kA);

T is the subconductor tensile load (N);

S is the bundle diameter (diameter of the circumscribing circle) (m);

D is the subconductor diameter (m);

K is the factor depending on the number of subconductors in the bundle [$N^{0,5}\ A^{-1}$]:

Number of subconductors	K factor
2	1,585
3	1,450
4	1,260
6	1,014

Example 1

Bundle type:	quad
Spacing:	450 × 10^{-3} m
Bundle diameter S:	636 × 10^{-3} m
Subconductor type:	ACSR Curlew
Overall diameter D:	31,68 × 10^{-3} m
Tensile load T:	32 000 N
Short-circuit current I_{cc}:	50 kA

$$F_{\max} = 1,26 \times 50 \sqrt{32000 \times \lg \frac{636}{31,68}} = 12863\text{N}$$

Example 2

Bundle type:	twin
Spacing:	400 × 10^{-3} m
Bundle diameter S:	400 × 10^{-3} m
Subconductor type:	AAAC Flint
Overall diameter D:	25,16 × 10^{-3} m
Tensile load T:	21 700 N
Short-circuit current I_{cc}:	20 kA

$$F_{\max} = 1,585 \times 20 \sqrt{21700 \times \lg \frac{400}{25,16}} = 5188\text{N}$$

Licensed copy: Sukanya Arayangkoon, The Electricity Generating Authority of, Version correct as of 01/12/2020

Annex C
(informative)

Characterisation of the elastic and damping properties
Stiffness-Damping Method

With reference to Figure C.1, by assuming $\frac{H_t}{\omega}$ as the equivalent viscous damping of the hinge and the force *f* always perpendicular to the arm, the rotation of the spacer arm around the centre of the hinge is described by the formula:

$$J\ \varphi'' + \frac{H_t}{\omega}\varphi' + K_t\ \varphi = f\ l \qquad \text{(C.1)}$$

where

J is the moment of the inertia of the arm in respect of the centre of rotation;

φ, φ', φ'' are respectively the instantaneous values of the angle of rotation of the arm and the associated first and second derivative;

ω is the circular frequency;

H_t is the damping constant;

K_t is the torsional stiffness;

f is the instantaneous value of the applied force;

l is the arm length.

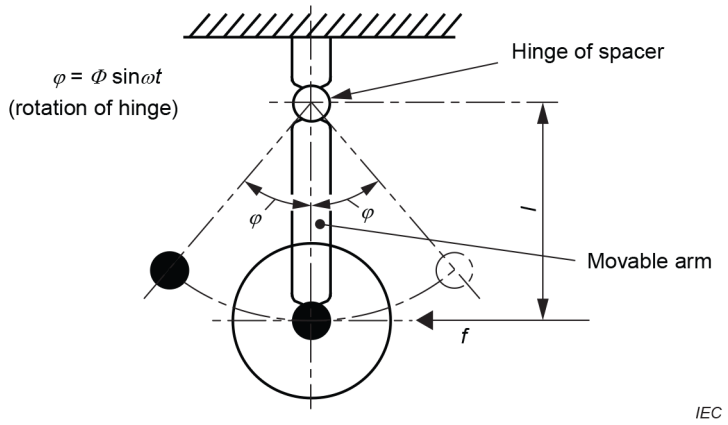

Figure C.1 – Rotation of spacer arm around the centre of the hinge

By assuming a sinusoidal force

$f = F\ e^{j\omega t}$ (F = peak value, complex representation)

the angle of rotation will be sinusoidal

$$\phi = \Phi\ e^{j\omega t} e^{-j\alpha} \quad (\Phi = \text{peak value})$$

and will satisfy formula (C.1).

$$-\omega^2 J\ \Phi\ e^{j\omega t}e^{-j\alpha} + H_t j\ \Phi\ e^{j\omega t}e^{-j\alpha} + K_t \Phi\ e^{j\omega t}e^{-j\alpha} = F\ l\ e^{j\omega t} \qquad \text{(C.2)}$$

The relevant vector representation is illustrated in Figure C.2.

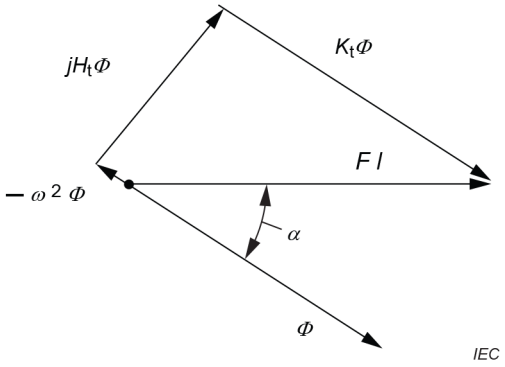

Figure C.2 – Vector representation of formula C.2

For very low frequency ν (ω = 2 $\pi\nu$) and for a typical spacer damper, it is possible to neglect $\omega^2 \cdot J \cdot \Phi$ with respect to $K_t \cdot \Phi$, therefore:

$$\tan\alpha = \frac{H_t}{K_t}$$

$$\text{and, } K_t = \frac{F\ l\ \cos\alpha}{\Phi}$$

The energy dissipated by the hinge in one period is equal to:

$$E = \int f\ l\ d\varphi = \int f\ l\ \frac{d\varphi}{dt} dt$$

where

$$f = F \sin\omega t$$
$$\varphi = \Phi \sin\left(\omega t - \alpha\right)$$

$$E = F\ l\ \Phi\ \omega \int_0^{\frac{2\pi}{\omega}} \sin\omega t \cos\left(\omega t - \alpha\right) dt = \pi\ F\ l\ \Phi \sin\alpha$$

Licensed copy: Sukanya Arayangkoon, The Electricity Generating Authority of, Version correct as of 01/12/2020

Annex D
(informative)

Verification of vibration behaviour of the bundle/spacer system

D.1 General

Bundled conductors of overhead lines are subject to aeolian vibration and subconductor oscillation which, under severe conditions, may lead to fatigue failure of conductor strands or fittings. Spacer dampers are frequently used to reduce the amplitudes of these wind-induced vibrations and hence avoid the associated fatigue problems.

NOTE Sometimes the damping system for bundle conductors comprises either flexible spacers or spacer dampers together with vibration dampers.

The performance of a given spacer system in respect of vibratory behaviour is strictly correlated to the characteristics of the bundle (type of conductors, spacing, tensile load, etc.); as a consequence, the bundle plus spacer system shall be considered as a "whole" in evaluating the vibratory behaviour.

The performance verification of the bundle/spacer system, if agreed between purchaser and supplier, should consider aeolian vibration since this is the most common vibration phenomenon. Performance verification for subspan oscillation may also be agreed.

The performance verification should be made in one of the following two ways:

– analytically, determining the vibratory behaviour through the use of specific computer programs based on mathematical models of the system. The analytical performance verification should be carried out by the supplier;
– experimentally, carrying out field tests on overhead lines or experimental spans exposed to natural wind.

If agreed between purchaser and supplier, test evidence regarding previous experimental verification of the proposed damping systems can be accepted to evaluate the performance without any other additional field tests.

D.2 Aeolian vibration

The analytical verifications of aeolian vibration behaviour should be carried out for at least two spans of different length.

The purchaser should provide the following additional information, where available:

– the length of the two spans;
– the characteristics of the conductor (type, stranding, mass per length, RTS);
– the tensile load of the conductors (to be based on the yearly distribution of the minimum daily temperature);
– the conductor self-damping, or alternatively a section of conductor to be used by the supplier for evaluating, experimentally, the conductor self-damping; experimental data available for similar conductors can also be used for determining theoretically the self-damping coefficient;
– the type of suspension clamp (conventional, AGS, etc);
– the characteristics of armor rods, if applied;
– the characteristics of devices, other than damping elements, attached to the conductor and their in-span distribution;

Licensed copy: Sukanya Arayangkoon, The Electricity Generating Authority of, Version correct as of 01/12/2020

– the conditions of the terrain surrounding the line (flat, hilly, woody, etc.);

– the yearly distribution of the average wind velocity (10 min mean) at the site relevant to the overhead line.

The experimental verification of aeolian vibration behaviour should be carried out for at least two spans of different length. The purchaser and supplier shall agree upon the period of time for the field tests, the measurements to be made (bending amplitude or strain at the suspension clamp, at the spacer-clamps, wind speed and direction, turbulence, etc.), the instrumentation and transducers to be used and the procedures for processing and presenting the experimental data.

The specified period of time for the field tests should be extended if during the same period the frequency of occurrence of wind perpendicular to the test spans with speeds in the range 0,5 m/s to 10 m/s, is deemed to be insufficient.

- Suggested acceptance criteria

The acceptance criteria should take into consideration the strains on the conductor at the suspension clamps, at the spacer-clamps and at the damper clamps, if dampers are used.

The acceptance criteria should be agreed between purchaser and supplier making reference to IEEE WPM 31 TP 65-156 [1], CIGRE SC22-WG04 [2], CIGRE SC22 WG11-TF2 [3] and IEEE Std 1368 [5] or to other equivalent publications.

D.3 Subspan oscillation

The analytical verification of subspan oscillation behaviour should be carried out for at least two spans of different length.

The purchaser should provide:

– the length of the two spans;

– the tensile load of the conductors;

– the characteristics of the conductor (type, stranding, mass per length, RTS);

– the conditions of the terrain surrounding the line (flat, hilly, woody, etc);

– the characteristics of devices, other than damping elements, attached to the conductor and their in-span distribution;

– the yearly distribution of the average wind velocity (10 min mean) at the site relevant to the overhead line, if available.

The experimental verification of subspan oscillation behaviour should be carried out for at least two adjacent spans of different length. The purchaser and supplier should agree upon the period of time for the field tests, the measurements to be made (amplitude of oscillation at mid-subspan and/or at a quarter-subspan, bending amplitude or strain at the spacer clamps, direction, speed and turbulence of the wind, etc.), the instrumentation and transducers to be used, and the procedures for processing and presenting the experimental data.

- Suggested acceptance criteria

The acceptance criteria should take into consideration the amplitude of oscillation at mid-subspan and at a quarter-subspan.

Propagation to adjacent subspans the subspan oscillations, strains at the spacer clamps or at the suspension clamps can also be considered.

The acceptance criteria should be agreed between purchaser and supplier.

Licensed copy: Sukanya Arayangkoon, The Electricity Generating Authority of, Version correct as of 01/12/2020

Annex E
(informative)

Description of HT conductors as given in CIGRE TB 695-2017 [7]

Type 0

Conductors designed for a maximum continuous operating temperature of 95 °C.

Type 1

Conductors consisting of a strength member made of steel, coated steel, or steel alloy, and an envelope for which the high temperature effects are mitigated by means of thermal-resistant aluminium alloys.

Type 2

Conductors consisting of a strength member made of steel, coated steel, or steel alloy, and an envelope for which the high temperature effects are mitigated by means of annealed aluminium.

Type 3

Conductors consisting of a metal-matrix composite (MMC) strength member, and an envelope for which the high temperature effects are mitigated by means of thermal-resistant aluminium alloys.

Type 4

Conductors consisting of a polymer-matrix composite (PMC) strength member, and an envelope for which the high temperature effects are mitigated by means of annealed aluminium or thermal-resistant aluminium alloys for HTLS applications.

Licensed copy: Sukanya Arayangkoon, The Electricity Generating Authority of, Version correct as of 01/12/2020

Bibliography

[1] IEEE Committee report, *Standardization of conductor vibration measurements*; IEEE WPM 1965; 31TP 65-156

[2] CIGRE SC22 WG04, *Recommendations for the evaluation of the lifetime of transmission line conductors*; Electra 63, March 1979

[3] CIGRE SC22 WG11-TF2, *Guide to vibration measurements on overhead lines* – Electra 163, Dec 1995

[4] Manuzio C. An investigation on the forces on bundle conductor spacers under fault conditions – *IEEE T & D*, June-July 1965, Paper 31TP 65-707

[5] IEEE Std 1368:2007, *IEEE Guide for Aeolian Vibration Field Measurements of Overhead Conductors*

[6] CIGRE SCB2 WG11-TF05, *State of the art survey on spacers and spacer dampers* – Technical Brochure 277, August 2005

[7] CIGRE SCB2 WG 48, *Experience with the mechanical performance of non-conventional conductors* – Technical Brochure 695, August 2017

Licensed copy: Sukanya Arayangkoon, The Electricity Generating Authority of, Version correct as of 01/12/2020

NO COPYING WITHOUT BSI PERMISSION EXCEPT AS PERMITTED BY COPYRIGHT LAW

British Standards Institution (BSI)

BSI is the national body responsible for preparing British Standards and other standards-related publications, information and services.

BSI is incorporated by Royal Charter. British Standards and other standardization products are published by BSI Standards Limited.

Licensed copy: Sukanya Arayangkoon, The Electricity Generating Authority of, Version correct as of 01/12/2020

About us

We bring together business, industry, government, consumers, innovators and others to shape their combined experience and expertise into standards -based solutions.

The knowledge embodied in our standards has been carefully assembled in a dependable format and refined through our open consultation process. Organizations of all sizes and across all sectors choose standards to help them achieve their goals.

Information on standards

We can provide you with the knowledge that your organization needs to succeed. Find out more about British Standards by visiting our website at bsigroup.com/standards or contacting our Customer Services team or Knowledge Centre.

Buying standards

You can buy and download PDF versions of BSI publications, including British and adopted European and international standards, through our website at bsigroup.com/shop, where hard copies can also be purchased.

If you need international and foreign standards from other Standards Development Organizations, hard copies can be ordered from our Customer Services team.

Copyright in BSI publications

All the content in BSI publications, including British Standards, is the property of and copyrighted by BSI or some person or entity that owns copyright in the information used (such as the international standardization bodies) and has formally licensed such information to BSI for commercial publication and use.

Save for the provisions below, you may not transfer, share or disseminate any portion of the standard to any other person. You may not adapt, distribute, commercially exploit or publicly display the standard or any portion thereof in any manner whatsoever without BSI's prior written consent.

Storing and using standards

Standards purchased in soft copy format:

- A British Standard purchased in soft copy format is licensed to a sole named user for personal or internal company use only.
- The standard may be stored on more than one device provided that it is accessible by the sole named user only and that only one copy is accessed at any one time.
- A single paper copy may be printed for personal or internal company use only.

Standards purchased in hard copy format:

- A British Standard purchased in hard copy format is for personal or internal company use only.
- It may not be further reproduced – in any format – to create an additional copy. This includes scanning of the document.

If you need more than one copy of the document, or if you wish to share the document on an internal network, you can save money by choosing a subscription product (see 'Subscriptions').

Reproducing extracts

For permission to reproduce content from BSI publications contact the BSI Copyright and Licensing team.

Subscriptions

Our range of subscription services are designed to make using standards easier for you. For further information on our subscription products go to bsigroup.com/subscriptions.

With **British Standards Online (BSOL)** you'll have instant access to over 55,000 British and adopted European and international standards from your desktop. It's available 24/7 and is refreshed daily so you'll always be up to date.

You can keep in touch with standards developments and receive substantial discounts on the purchase price of standards, both in single copy and subscription format, by becoming a **BSI Subscribing Member.**

PLUS is an updating service exclusive to BSI Subscribing Members. You will automatically receive the latest hard copy of your standards when they're revised or replaced.

To find out more about becoming a BSI Subscribing Member and the benefits of membership, please visit bsigroup.com/shop.

With a **Multi-User Network Licence (MUNL)** you are able to host standards publications on your intranet. Licences can cover as few or as many users as you wish. With updates supplied as soon as they're available, you can be sure your documentation is current. For further information, email cservices@bsigroup.com.

Revisions

Our British Standards and other publications are updated by amendment or revision.

We continually improve the quality of our products and services to benefit your business. If you find an inaccuracy or ambiguity within a British Standard or other BSI publication please inform the Knowledge Centre.

Useful Contacts

Customer Services
Tel: +44 345 086 9001
Email: cservices@bsigroup.com

Subscriptions
Tel: +44 345 086 9001
Email: subscriptions@bsigroup.com

Knowledge Centre
Tel: +44 20 8996 7004
Email: knowledgecentre@bsigroup.com

Copyright & Licensing
Tel: +44 20 8996 7070
Email: copyright@bsigroup.com

BSI Group Headquarters

389 Chiswick High Road London W4 4AL UK