Copyright 2014 National Fire Protection Association (NFPA). Licensed, by agreement, for individual use and download on October 4, 2014 to LEADER and READER for designated user PATTARAPORN SRITRAKOOL. No other reproduction or transmission in any form permitted without written permission of NFPA. For inquires or to report unauthorized use, contact licensing@nfpa.org.

NFPA® 90B

Standard for the Installation of Warm Air Heating and Air-Conditioning Systems

2015 Edition



NFPA, 1 Batterymarch Park, Quincy, MA 02169-7471
An International Codes and Standards Organization

Copyright 2014 National Fire Protection Association (NFPA). Licensed, by agreement, for individual use and download on October 4, 2014 to LEADER and READER for designated user PATTARAPORN SRITRAKOOL. No other reproduction or transmission in any form permitted without written permission of NFPA. For inquires or to report unauthorized use, contact licensing@nfpa.org.

IMPORTANT NOTICES AND DISCLAIMERS CONCERNING NFPA® STANDARDS

NOTICE AND DISCLAIMER OF LIABILITY CONCERNING THE USE OF NFPA STANDARDS

NFPA® codes, standards, recommended practices, and guides ("NFPA Standards"), of which the document contained herein is one, are developed through a consensus standards development process approved by the American National Standards Institute. This process brings together volunteers representing varied viewpoints and interests to achieve consensus on fire and other safety issues. While the NFPA administers the process and establishes rules to promote fairness in the development of consensus, it does not independently test, evaluate, or verify the accuracy of any information or the soundness of any judgments contained in NFPA Standards.

The NFPA disclaims liability for any personal injury, property or other damages of any nature whatsoever, whether special, indirect, consequential or compensatory, directly or indirectly resulting from the publication, use of, or reliance on NFPA Standards. The NFPA also makes no guaranty or warranty as to the accuracy or completeness of any information published herein.

In issuing and making NFPA Standards available, the NFPA is not undertaking to render professional or other services for or on behalf of any person or entity. Nor is the NFPA undertaking to perform any duty owed by any person or entity to someone else. Anyone using this document should rely on his or her own independent judgment or, as appropriate, seek the advice of a competent professional in determining the exercise of reasonable care in any given circumstances.

The NFPA has no power, nor does it undertake, to police or enforce compliance with the contents of NFPA Standards. Nor does the NFPA list, certify, test, or inspect products, designs, or installations for compliance with this document. Any certification or other statement of compliance with the requirements of this document shall not be attributable to the NFPA and is solely the responsibility of the certifier or maker of the statement.

REMINDER: UPDATING OF NFPA STANDARDS

Users of NFPA codes, standards, recommended practices, and guides ("NFPA Standards") should be aware that NFPA Standards may be amended from time to time through the issuance of Tentative Interim Amendments or corrected by Errata. An official NFPA Standard at any point in time consists of the current edition of the document together with any Tentative Interim Amendment and any Errata then in effect.

In order to determine whether an NFPA Standard has been amended through the issuance of Tentative Interim Amendments or corrected by Errata, visit the Document Information Pages on NFPA's website. The Document Information Pages provide up-to-date, document specific information including any issued Tentative Interim Amendments and Errata.

To access the Document Information Page for a specific NFPA Standard, go to http://www.nfpa.org/docinfo to choose from the list of NFPA Standards or use the search feature on the right to select the NFPA Standard number (e.g., NFPA 101). In addition to posting all existing Tentative Interim Amendments and Errata, the Document Information Page also includes the option to sign-up for an "Alert" feature to receive an email notification when new updates and other information are posted regarding the document.

ISBN: 978-145590899-8 (Print)
ISBN: 978-145590939-1 (PDF)

Copyright 2014 National Fire Protection Association (NFPA). Licensed, by agreement, for individual use and download on October 4, 2014 to LEADER and READER for designated user PATTARAPORN SRITRAKOOL. No other reproduction or transmission in any form permitted without written permission of NFPA. For inquires or to report unauthorized use, contact licensing@nfpa.org.

IMPORTANT NOTICES AND DISCLAIMERS CONCERNING NFPA® STANDARDS

ADDITIONAL NOTICES AND DISCLAIMERS

Updating of NFPA Standards

Users of NFPA codes, standards, recommended practices, and guides ("NFPA Standards") should be aware that these documents may be superseded at any time by the issuance of new editions or may be amended from time to time through the issuance of Tentative Interim Amendments or corrected by Errata. An official NFPA Standard at any point in time consists of the current edition of the document together with any Tentative Interim Amendments and any Errata then in effect. In order to determine whether a given document is the current edition and whether it has been amended through the issuance of Tentative Interim Amendments or corrected through the issuance of Errata, consult appropriate NFPA publications such as the National Fire Codes® Subscription Service, visit the NFPA website at www.nfpa.org, or contact the NFPA at the address listed below.

Interpretations of NFPA Standards

A statement, written or oral, that is not processed in accordance with Section 6 of the Regulations Governing the Development of NFPA Standards shall not be considered the official position of NFPA or any of its Committees and shall not be considered to be, nor be relied upon as, a Formal Interpretation.

Patents

The NFPA does not take any position with respect to the validity of any patent rights referenced in, related to, or asserted in connection with an NFPA Standard. The users of NFPA Standards bear the sole responsibility for determining the validity of any such patent rights, as well as the risk of infringement of such rights, and the NFPA disclaims liability for the infringement of any patent resulting from the use of or reliance on NFPA Standards.

NFPA adheres to the policy of the American National Standards Institute (ANSI) regarding the inclusion of patents in American National Standards ("the ANSI Patent Policy"), and hereby gives the following notice pursuant to that policy:

> **NOTICE:** The user's attention is called to the possibility that compliance with an NFPA Standard may require use of an invention covered by patent rights. NFPA takes no position as to the validity of any such patent rights or as to whether such patent rights constitute or include essential patent claims under the ANSI Patent Policy. If, in connection with the ANSI Patent Policy, a patent holder has filed a statement of willingness to grant licenses under these rights on reasonable and nondiscriminatory terms and conditions to applicants desiring to obtain such a license, copies of such filed statements can be obtained, on request, from NFPA. For further information, contact the NFPA at the address listed below.

Law and Regulations

Users of NFPA Standards should consult applicable federal, state, and local laws and regulations. NFPA does not, by the publication of its codes, standards, recommended practices, and guides, intend to urge action that is not in compliance with applicable laws, and these documents may not be construed as doing so.

Copyrights

NFPA Standards are copyrighted. They are made available for a wide variety of both public and private uses. These include both use, by reference, in laws and regulations, and use in private self-regulation, standardization, and the promotion of safe practices and methods. By making these documents available for use and adoption by public authorities and private users, the NFPA does not waive any rights in copyright to these documents.

Use of NFPA Standards for regulatory purposes should be accomplished through adoption by reference. The term "adoption by reference" means the citing of title, edition, and publishing information only. Any deletions, additions, and changes desired by the adopting authority should be noted separately in the adopting instrument. In order to assist NFPA in following the uses made of its documents, adopting authorities are requested to notify the NFPA (Attention: Secretary, Standards Council) in writing of such use. For technical assistance and questions concerning adoption of NFPA Standards, contact NFPA at the address below.

For Further Information

All questions or other communications relating to NFPA Standards and all requests for information on NFPA procedures governing its codes and standards development process, including information on the procedures for requesting Formal Interpretations, for proposing Tentative Interim Amendments, and for proposing revisions to NFPA standards during regular revision cycles, should be sent to NFPA headquarters, addressed to the attention of the Secretary, Standards Council, NFPA, 1 Batterymarch Park, P.O. Box 9101, Quincy, MA 02269-9101; email: stds_admin@nfpa.org

For more information about NFPA, visit the NFPA website at www.nfpa.org. All NFPA codes and standards can be viewed at no cost at www.nfpa.org/freeaccess.

Copyright 2014 National Fire Protection Association (NFPA). Licensed, by agreement, for individual use and download on October 4, 2014 to LEADER and READER for designated user PATTARAPORN SRITRAKOOL. No other reproduction or transmission in any form permitted without written permission of NFPA. For inquires or to report unauthorized use, contact licensing@nfpa.org.

Copyright © 2014 National Fire Protection Association®. All Rights Reserved.

NFPA® 90B

Standard for the

Installation of Warm Air Heating and Air-Conditioning Systems

2015 Edition

This edition of NFPA 90B, *Standard for the Installation of Warm Air Heating and Air-Conditioning Systems*, was prepared by the Technical Committee on Air Conditioning. It was issued by the Standards Council on April 29, 2014, with an effective date of May 19, 2014, and supersedes all previous editions.

This edition of NFPA 90B was approved as an American National Standard on May 19, 2014.

Origin and Development of NFPA 90B

This standard dates from 1899, when committee attention was first given to blower and exhaust systems. Prior to 1936, the subject of air conditioning was covered in NFPA standards on blower systems. In 1937, it was decided to prepare a separate standard on air-conditioning, warm air heating, and ventilating systems. This standard was initially adopted in 1937 with subsequent amendments in 1938, 1939, 1940, 1942, 1950, 1952, 1955, 1956, 1960, 1961, 1963, 1964, 1965, 1968, 1971, 1973, 1976, 1980, 1984, and 1989. The 1993 and 1996 editions were reconfirmations of the 1989 edition. The 1999 edition contained changes that were mainly editorial in nature.

The 2002 edition incorporated format changes to comply with the *Manual of Style for NFPA Technical Committee Documents* and new provisions for the removal of accessible abandoned materials in concealed spaces and plenums.

The only changes to the 2006 edition were to update "flame spread rating" to "flame spread index."

The major change in the 2009 edition was to replace the references to NFPA 255 with ANSI/UL 723 and ASTM E 84, since NFPA 255 had been withdrawn. All three test standards are quite similar.

The changes in the 2012 edition were for the purpose of updating the editions of the referenced standards.

For the 2015 edition, the changes that have been made consist of primarily editorial alterations, reference updates, and clarifications of existing language. A section and test method for air dispersion systems has also been added.

NFPA and National Fire Protection Association are registered trademarks of the National Fire Protection Association, Quincy, Massachusetts 02169.

Copyright 2014 National Fire Protection Association (NFPA). Licensed, by agreement, for individual use and download on October 4, 2014 to LEADER and READER for designated user PATTARAPORN SRITRAKOOL. No other reproduction or transmission in any form permitted without written permission of NFPA. For inquires or to report unauthorized use, contact licensing@nfpa.org.

Technical Committee on Air Conditioning

Ralph D. Gerdes, *Chair*
Ralph Gerdes Consultants, LLC, IN [SE]

Charles E. Altizer, Virginia State Fire Marshal's Office, VA [E]
Rep. International Fire Marshals Association
Ramzi A. Amawi, Intertek Testing Services, OH [RT]
Jesse J. Beitel, Hughes Associates, Inc., MD [SE]
James S. Buckley, Jacobs, TX [IM]
Rep. American Society for Heating, Refrigeration & Air Conditioning Engineers Inc.
Merton W. Bunker, Jr., U.S. Department of State, VA [U]
Laurence W. Caraway, Jr., Kitchen Klean Inc., NH [IM]
Rep. National Air Duct Cleaners Association
Michael Earl Dillon, Dillon Consulting Engineers, Inc., CA [SE]
James T. Dollard, Jr., IBEW Local Union 98, PA [L]
Rep. International Brotherhood of Electrical Workers
Thomas M. Dusza, The RJA Group, CA [SE]
Jonathan Flannery, AHA-ASHE, AR [U]
Thomas P. Hammerberg, Automatic Fire Alarm Association, Inc., GA [M]
Rep. Automatic Fire Alarm Association, Inc.
J. C. Harrington, FM Global, MA [I]
Jonathan Hartsell, Rodgers, NC [IM]
Marcelo M. Hirschler, GBH International, CA [M]
Rep. American Fire Safety Council/Plenum Cable Assn.
Charles C. Holt, National Energy Management Institute, VA [L]
Rep. Sheet Metal Workers' International Association
Eli P. Howard, III, Sheet Metal & Air Conditioning Contractors Natl. Assn., VA [IM]
Anthony Hurst, Mason & Hanger, KY [SE]
Marvin A. Koerber, ATCO Rubber Products Inc., SC [M]
Rep. Air Diffusion Council
William E. Koffel, Koffel Associates, Inc., MD [M]
Rep. Society of the Plastics Industry, Inc.
Richard E. Loyd, R & N Associates, AZ [M]
Rep. American Iron and Steel Institute
Timothy J. Orris, AMCA International, Inc., IL [M]
Rep. Air Movement & Control Association
Thomas E. Ponder, CertainTeed Corporation, PA [M]
Rep. North American Insulation Manufacturers Association
Suresh K. Shah, U.S. Department of Health & Human Services, TX [U]
Dwayne E. Sloan, UL LLC, NC [RT]
George A. Straniero, AFC Cable Systems, Inc., NJ [M]
Rep. National Electrical Manufacturers Association
Randolph W. Tucker, ccrd partners, TX [SE]
Robert A. Wessel, Gypsum Association, MD [M]

Alternates

Diane B. Copeland, Dillon Consulting Engineers, Inc., CA [SE]
(Alt. to M. E. Dillon)
Charles C. Cottrell, North American Insulation Manufacturers Assn., VA [M]
(Alt. to T. E. Ponder)
Michael A. Gardner, Gypsum Association, MD [M]
(Alt. to R. A. Wessel)
David L. Hall, Air Products and Controls Inc., MI [M]
(Alt. to T. P. Hammerberg)
Amando Lyndyll Hisole, ccrd partners, TX [SE]
(Alt. to R. W. Tucker)
Charles Joyce, The RJA Group, NY [SE]
(Alt. to T. M. Dusza)
Ralph A. Koerber, ATCO Rubber Products, Inc., TX [M]
(Alt. to M. A. Koerber)
Randall K. Laymon, UL LLC, IL [RT]
(Alt. to D. E. Sloan)
Harold C. Ohde, IBEW-NECA Technical Institute, IL [L]
(Alt. to J. T. Dollard, Jr.)
Isaac I. Papier, Honeywell, Inc., IL [M]
(Alt. to G. A. Straniero)
Ajay V. Prasad, Hughes Associates, Inc., MD [SE]
(Alt. to J. J. Beitel)
Mark Terzigni, Sheet Metal & Air Conditioning Contractors Natl. Assn., VA [IM]
(Alt. to E. P. Howard, III)
Frank Wang, Aon Fire Protection Engineering, CA [I]
(Alt. to Aon Rep.)
Robert J. Wills, American Iron and Steel Institute, AL [M]
(Alt. to R. E. Loyd)

Allan Fraser, NFPA Staff Liaison

This list represents the membership at the time the Committee was balloted on the final text of this edition. Since that time, changes in the membership may have occurred. A key to classifications is found at the back of the document.

NOTE: Membership on a committee shall not in and of itself constitute an endorsement of the Association or any document developed by the committee on which the member serves.

Committee Scope: This Committee shall have primary responsibility for documents on the construction, installation, operation, and maintenance of systems for air conditioning, warm air heating, and ventilating including filters, ducts, and related equipment to protect life and property from fire, smoke, and gases resulting from fire or from conditions having manifestations similar to fire.

Copyright 2014 National Fire Protection Association (NFPA). Licensed, by agreement, for individual use and download on October 4, 2014 to LEADER and READER for designated user PATTARAPORN SRITRAKOOL. No other reproduction or transmission in any form permitted without written permission of NFPA. For inquires or to report unauthorized use, contact licensing@nfpa.org.

Contents

Chapter 1 Administration **90B–** 4
1.1 Scope **90B–** 4
1.2 Purpose **90B–** 4
1.3 Application **90B–** 4
1.4 Equivalency **90B–** 4

Chapter 2 Referenced Publications **90B–** 4
2.1 General **90B–** 4
2.2 NFPA Publications **90B–** 4
2.3 Other Publications **90B–** 4
2.4 References for Extracts in Mandatory Sections **90B–** 5

Chapter 3 Definitions **90B–** 5
3.1 General **90B–** 5
3.2 NFPA Official Definitions **90B–** 5
3.3 General Definitions **90B–** 5

Chapter 4 System Components **90B–** 5
4.1 Supply Systems **90B–** 5
4.2 Return Systems **90B–** 7
4.3 Common Requirements **90B–** 7

Chapter 5 Fire Integrity of Building Construction **90B–** 9
5.1 Clearances to Combustible Material **90B–** 9
5.2 Firestopping **90B–**11

Chapter 6 Equipment, Wiring, and Controls **90B–**13
6.1 Equipment **90B–**13
6.2 Electric Wiring and Equipment **90B–**14
6.3 Controls **90B–**14

Annex A Explanatory Material **90B–**15

Annex B Informational References **90B–**16

Index **90B–**17

Copyright 2014 National Fire Protection Association (NFPA). Licensed, by agreement, for individual use and download on October 4, 2014 to LEADER and READER for designated user PATTARAPORN SRITRAKOOL. No other reproduction or transmission in any form permitted without written permission of NFPA. For inquires or to report unauthorized use, contact licensing@nfpa.org.

NFPA 90B

Standard for the

Installation of Warm Air Heating and Air-Conditioning Systems

2015 Edition

IMPORTANT NOTE: This NFPA document is made available for use subject to important notices and legal disclaimers. These notices and disclaimers appear in all publications containing this document and may be found under the heading "Important Notices and Disclaimers Concerning NFPA Documents." They can also be obtained on request from NFPA or viewed at www.nfpa.org/disclaimers.

NOTICE: An asterisk (*) following the number or letter designating a paragraph indicates that explanatory material on the paragraph can be found in Annex A.

A reference in brackets [ ] following a section or paragraph indicates material that has been extracted from another NFPA document. As an aid to the user, the complete title and edition of the source documents for extracts in mandatory sections of the document are given in Chapter 2 and those for extracts in informational sections are given in Annex B. Extracted text may be edited for consistency and style and may include the revision of internal paragraph references and other references as appropriate. Requests for interpretations or revisions of extracted text shall be sent to the technical committee responsible for the source document.

Information on referenced publications can be found in Chapter 2 and Annex B.

Chapter 1 Administration

1.1* Scope. This standard shall cover construction, installation, operation, and maintenance of systems for warm air heating and air conditioning, including filters, ducts, and related equipment to protect life and property from fire, smoke, and gases resulting from fire or from conditions having manifestations similar to fire.

1.2 Purpose. This standard shall prescribe provisions based on minimum requirements for safety to life and property.

1.3 Application.

1.3.1 This standard shall apply to all systems for the movement of environmental air in structures that serve the following, except as described in 1.3.2:

(1) One- or two-family dwellings
(2) Spaces not exceeding 708 m^3 (25,000 ft^3) in volume in any occupancy

1.3.2 This standard shall not apply to systems for the movement of environmental air in buildings of combustible construction over three stories in height, which shall comply with NFPA 90A.

1.4 Equivalency. Nothing in this standard is intended to prevent the use of systems, methods, or devices of equivalent or superior quality, strength, fire resistance, effectiveness, durability, and safety over those prescribed by this standard.

1.4.1 Technical documentation shall be submitted to the authority having jurisdiction to demonstrate equivalency.

1.4.2 The system, method, or device shall be approved for the intended purpose by the authority having jurisdiction.

Chapter 2 Referenced Publications

2.1 General. The documents or portions thereof listed in this chapter are referenced within this standard and shall be considered part of the requirements of this document.

2.2 NFPA Publications. National Fire Protection Association, 1 Batterymarch Park, Quincy, MA 02169-7471.

NFPA 70®, National Electrical Code®, 2014 edition.

NFPA 90A, *Standard for the Installation of Air-Conditioning and Ventilating Systems,* 2015 edition.

NFPA 286, *Standard Methods of Fire Tests for Evaluating Contribution of Wall and Ceiling Interior Finish to Room Fire Growth,* 2011 edition.

NFPA 701, *Standard Methods of Fire Tests for Flame Propagation of Textiles and Films,* 2010 edition.

2.3 Other Publications.

2.3.1 ANSI/ASHRAE Publications. American National Standards Institute, Inc., 25 West 43rd Street, 4th floor, New York, NY 10036.

ANSI/ASHRAE 15, *Safety Code for Mechanical Refrigeration,* 2004.

2.3.2 ASTM Publications. ASTM International, 100 Barr Harbor Drive, P.O. Box C700, West Conshohocken, PA 19428-2959.

ASTM C 411, *Standard Test Method for Hot-Surface Performance of High-Temperature Thermal Insulation,* 2011.

ASTM D 93, *Standard Test Methods for Flash Point by Pensky-Martens Closed Cup Tester,* 2013.

ASTM E 84, *Standard Test Method for Surface Burning Characteristics of Building Materials,* 2013a.

ASTM E 2231, *Standard Practice for Specimen Preparation and Mounting of Pipe and Duct Insulation Materials to Assess Surface Burning Characteristics,* 2009.

ASTM E 2688, *Standard Practice for Specimen Preparation and Mounting of Tapes to Assess Surface Burning Characteristics,* 2012.

ASTM E 2690, *Standard Practice for Specimen Preparation and Mounting of Caulks and Sealants to Assess Surface Burning Characteristics,* 2010e2.

2.3.3 SMACNA Publications. Sheet Metal and Air Conditioning Contractors' National Association, Inc., 4201 Lafayette Center Drive, Chantilly, VA 20151-1209.

Fibrous Glass Duct Construction Standards, 7th edition, 2003.

HVAC Duct Construction Standards — Metal and Flexible, 3rd edition, 2005.

Residential Comfort System Installation Standards Manual, 7th edition, 1998.

2.3.4 UL Publications. Underwriters Laboratories Inc., 333 Pfingsten Road, Northbrook, IL 60062-2096.

ANSI/UL 94, *Standard for Safety Test for Flammability of Plastic Materials for Parts in Devices and Appliances,* 1996, revised 2012.

ANSI/UL 181, *Standard for Safety Factory-Made Air Ducts and Air Connectors,* 2013.

ANSI/UL 181A, *Standard for Safety Closure Systems for Use with Rigid Air Ducts,* 2013.

Copyright 2014 National Fire Protection Association (NFPA). Licensed, by agreement, for individual use and download on October 4, 2014 to LEADER and READER for designated user PATTARAPORN SRITRAKOOL. No other reproduction or transmission in any form permitted without written permission of NFPA. For inquires or to report unauthorized use, contact licensing@nfpa.org.

ANSI/UL 181B, *Standard for Safety Closure Systems for Use with Flexible Air Ducts and Air Connectors,* 2013.

ANSI/UL 723, *Standard Test Method for Surface Burning Characteristics of Building Materials,* 2008, revised 2013.

ANSI/UL 900, *Standard for Air Filter Units,* 2004, revised 2012.

UL 2518, *Outline of Investigation for Air Dispersion System Materials,* 2005.

2.3.5 Other Publications.

Merriam-Webster's Collegiate Dictionary, 11th edition, Merriam-Webster, Inc., Springfield, MA, 2003.

2.4 References for Extracts in Mandatory Sections.

NFPA 90A, *Standard for the Installation of Air-Conditioning and Ventilating Systems,* 2015 edition.

Chapter 3 Definitions

3.1 General. The definitions contained in this chapter shall apply to the terms used in this standard. Where terms are not defined in this chapter or within another chapter, they shall be defined using their ordinarily accepted meanings within the context in which they are used. *Merriam-Webster's Collegiate Dictionary,* 11th edition, shall be the source for the ordinarily accepted meaning.

3.2 NFPA Official Definitions.

3.2.1* Approved. Acceptable to the authority having jurisdiction.

3.2.2* Authority Having Jurisdiction (AHJ). An organization, office, or individual responsible for enforcing the requirements of a code or standard, or for approving equipment, materials, an installation, or a procedure.

3.2.3* Listed. Equipment, materials, or services included in a list published by an organization that is acceptable to the authority having jurisdiction and concerned with evaluation of products or services, that maintains periodic inspection of production of listed equipment or materials or periodic evaluation of services, and whose listing states that either the equipment, material, or service meets appropriate designated standards or has been tested and found suitable for a specified purpose.

3.2.4 Shall. Indicates a mandatory requirement.

3.2.5 Should. Indicates a recommendation or that which is advised but not required.

3.3 General Definitions.

3.3.1 Accessible. Capable of being removed or exposed without damaging the building structure or finish, or not permanently closed in by the structure or finish of the building. [**90A,** 2015]

3.3.2 Air Filter. A device used to reduce or remove airborne solids from heating, ventilating, and air-conditioning systems.

3.3.3 Central Warm Air Heating System. A heating system consisting of a heat exchanger with an outer casing or jacket, a solar collection system, or an electric heating unit that is connected to a supply system and a return system.

3.3.3.1 ***Forced Air System.*** A central warm air heating system that is equipped with a fan or blower that provides the primary means for circulation of air.

3.3.3.2* ***Gravity System.*** A central warm air heating system through which air is circulated by gravity.

3.3.4 Combustible Material. A material capable of undergoing combustion.

3.3.5 Duct Covering. A material such as adhesive, insulation, banding, coating(s), film, and jackets used to cover the outside surface of a duct, fan casing, or duct plenum.

3.3.6 Duct Lining. A material such as adhesive, insulation, coating(s), and film used to line the inside surface of a duct, fan casing, or duct plenum.

3.3.7 Heat Pump. A refrigeration system arranged to accomplish either heating or heating and cooling.

3.3.8 Noncombustible Material. See Section 4.1.

3.3.9 Plenum. A compartment or chamber to which one or more air ducts are connected and that forms part of the air distribution system.

3.3.10 Return System. An assembly of connected ducts, air passages, or plenums and fittings through which air from the space or spaces to be conditioned is conducted back to the heat exchanger.

3.3.11 Rooms Large in Comparison with Size of Equipment. Rooms having a volume equal to at least 12 times the total volume of a furnace or air-conditioning appliance and at least 16 times the total volume of a boiler. The total volume of the appliance is determined from exterior dimensions and is to include fan compartments and burner vestibules, when used. When the actual ceiling height of a room is greater than 2.44 m (8 ft), the volume of a room is figured on the basis of a ceiling height of 2.44 m (8 ft).

3.3.12 Supply System. An assembly of connected ducts, air passages, or plenums and fittings through which air is conducted to the space or spaces to be conditioned.

Chapter 4 System Components

4.1* Supply Systems.

4.1.1 Duct Materials.

4.1.1.1* Supply Ducts. Supply ducts shall be made of either of the following materials:

(1) Class 0 or Class 1 rigid or flexible air ducts tested in accordance with ANSI/UL 181
(2) Sheet metal having a nominal thickness as shown in Table 4.1.1.1

4.1.1.1.1 Supply ducts that are completely encased in not less than 51 mm (2 in.) of concrete in a floor slab shall not be required to meet the requirements of 4.1.1.1.

4.1.1.1.1.1 The supply ducts shall meet the requirements of 4.1.1.1(1) and 4.1.1.1(2) within 0.61 m (2 ft) of the furnace supply plenum and within 0.61 m (2 ft) of a vertical connection to a riser or register.

4.1.1.1.2 Supply ducts for a separate air cooling system, not interconnected to any warm air heating system, serving a single-family dwelling shall not be required to meet the requirements of 4.1.1.1, provided that they are not closer than 0.61 m (2 ft) to any furnace or its supply plenum, boiler, or other heat-producing appliances and that they comply with 4.2.1.1, 4.2.1.3, 4.2.2, 4.2.3, and 4.2.4 as specified for return ducts.

Copyright 2014 National Fire Protection Association (NFPA). Licensed, by agreement, for individual use and download on October 4, 2014 to LEADER and READER for designated user PATTARAPORN SRITRAKOOL. No other reproduction or transmission in any form permitted without written permission of NFPA. For inquires or to report unauthorized use, contact licensing@nfpa.org.

Table 4.1.1.1 Nominal Thickness of Sheet Metal Ducts

Diameter or Width		Nominal Thickness		Galvanized Sheet		Aluminum		Tin Plate	
				Minimum Thickness		Thickness		Minimum Weight per Base Box	
mm	in.	mm	in.	mm	in.	mm	in.	kg	lb
Round Ducts and Enclosed Rectangular Ducts									
356 or less	14 or less	0.406	0.016	0.330	0.013	0.406	0.016	61	135
Over 356	Over 14	0.483	0.019	0.406	0.016	0.508	0.020	—	—
Exposed Rectangular Ducts									
356 or less	14 or less	0.483	0.019	0.406	0.016	0.508	0.020	—	—
Over 356	Over 14	0.559	0.022	0.483	0.019	0.584	0.023	—	—

4.1.1.1.3 Vibration isolation connectors in duct systems shall comply with 4.1.1.1.3.1 or 4.1.1.1.3.2.

4.1.1.1.3.1 The connector shall be made of approved fabric meeting the flame propagation performance criteria contained in Test Method 1 or Test Method 2, as appropriate, of NFPA 701 and shall not exceed 254 mm (10 in.) in length in the direction of airflow.

4.1.1.1.3.2 The connector shall consist of sleeve joints with packing of approved material, exhibiting either (a) a maximum flame spread index of 25 and a maximum smoke developed index of 450 when tested in accordance with ASTM E 84 or with ANSI/UL 723 or (b) the criteria of 6.1.1.3.6 when tested in accordance with NFPA 286.

4.1.1.1.4 A Class 0 or Class 1 rigid or flexible air duct shall not be used as a vertical air duct that is more than two stories in height.

4.1.1.1.5 A Class 0 or Class 1 rigid or flexible air duct shall not be used in an air duct containing air at a temperature in excess of 121°C (250°F).

4.1.1.2* Supply ducts shall be installed in conformance with the following:

(1) The conditions of their listing
(2) SMACNA *Fibrous Glass Duct Construction Standards*
(3) SMACNA *HVAC Duct Construction Standards — Metal and Flexible*
(4) SMACNA *Residential Comfort System Installation Standards Manual*

4.1.2 Air Connectors. Air connectors are limited-use, flexible air ducts that shall not be required to conform to the requirements for air ducts provided they meet the following requirements:

(1) Air connectors shall conform to the requirements for Class 0 or Class 1 connectors when tested in accordance with ANSI/UL 181.
(2) Class 0 or Class 1 air connectors shall not be used in ducts containing air at temperatures in excess of 121°C (250°F).
(3) An air connector run shall not exceed 4.3 m (14 ft) in length.
(4) Air connectors shall not pass through any wall, partition, or enclosure of a vertical shaft that is required to have a fire resistance rating of 1 hour or more.
(5) Air connectors shall not pass through floors.

4.1.3 Furnace Plenums.

4.1.3.1 Furnace plenums shall be constructed of metal that is of the minimum thickness as shown in Table 4.1.1.1.

4.1.3.2 Furnace plenums shall be located a minimum of 914 mm (36 in.) from the heat exchanger measured along the centerline of airflow.

4.1.3.3 Other plenums shall conform to the requirements for supply ducts.

4.1.4 Use of Underfloor Space as a Supply Plenum. Where heated air is discharged downward into an air chamber that forms a plenum of an underfloor space, the following shall apply:

(1) Use of such spaces shall be restricted to one-story portions of single-family dwellings.
(2) Such spaces shall be cleaned of all combustible material, shall be tightly and substantially enclosed, and shall not be used for storage or occupancy.
(3) Accessible abandoned material shall be deemed to be storage and shall not be permitted to remain.
(4) The enclosing material of the underfloor space, including the sidewall insulation and ground cover, shall not be more flammable than 25.4 mm (1 in.) (nominal) wood boards.
(5) Ground cover not complying with the requirement in 4.1.4(4) shall be covered over with at least 51 mm (2 in.) of sand or other noncombustible material.
(6) Access, if provided to such spaces, shall be through an opening in the floor and shall be not greater than 610 mm × 610 mm (24 in. × 24 in.).
(7) Units supplying warm air to such a space shall be equipped with an automatic control that starts the air circulating fan when the air in the unit bonnet reaches a temperature not higher than 66°C (150°F).
(8) The automatic control shall not have the capability to be set higher than 66°C (150°F).
(9) Units supplying warm air to such a space shall be equipped with an approved temperature limit control that limits outlet air temperature to 93°C (200°F).
(10) A noncombustible receptacle shall be placed below each floor type, opening into the air chamber.

Copyright 2014 National Fire Protection Association (NFPA). Licensed, by agreement, for individual use and download on October 4, 2014 to LEADER and READER for designated user PATTARAPORN SRITRAKOOL. No other reproduction or transmission in any form permitted without written permission of NFPA. For inquires or to report unauthorized use, contact licensing@nfpa.org.

(11) Such receptacles shall conform to the following:
   (a) The receptacle shall be suspended securely from the floor members and shall be not more than 457 mm (18 in.) below the floor opening.
   (b) The size of the horizontal projected area of the receptacle shall extend 76 mm (3 in.) beyond the opening.
   (c) The perimeter of the receptacle shall have a vertical lip at least 25.4 mm (1 in.) high at the open sides if it is at the level of the bottom of the joists, or 76 mm (3 in.) high if the receptacle is suspended.
(12) Floor registers shall be designed for easy removal in order to provide access for cleaning the receptacles.
(13) Exterior walls and interior stud partitions shall be firestopped at the floor.
(14) Each wall register shall be connected to the air chamber with a duct or boot complying with 4.1.1, 4.1.3.1, and 4.1.3.2.
(15) Supply ducts to the air chamber shall comply with the provisions of 4.1.1, 4.1.2, and 5.1.1.
(16) Supply ducts to the air chamber shall terminate approximately under the center of a room above at a distance of not less than 1.83 m (6 ft) from the plenum chamber.
(17)*Furnaces, boilers, or other heat-producing appliances shall not be installed in such a supply plenum.

4.2 Return Systems.

4.2.1 Duct Materials.

4.2.1.1 Return ducts shall be permitted to be constructed of metal, of 25.4 mm (1 in.) (nominal) wood boards, or of other suitable material, provided that no material more flammable than 25.4 mm (1 in.) (nominal) wood boards shall be used.

4.2.1.2 Portions of return ducts directly above the heating surface or closer than 0.61 m (2 ft) from the outer jacket or casing of the heater shall be constructed in accordance with provisions of 4.1.1 for supply ducts.

4.2.1.3 The interior of combustible ducts shall be lined with noncombustible material at points where there might be danger from incandescent particles dropped through the register or heater, such as directly under floor registers, the bottom of vertical ducts, or heaters having a bottom return.

4.2.2 Duct Openings. In buildings where vertical openings are required to be enclosed by walls or partitions having a fire resistance rating, openings in the enclosures for connections to vertical ducts carrying return air from more than one story shall be protected by approved fire dampers in such openings.

4.2.3 Continuous Ducts.

4.2.3.1 Return air shall be conducted to the appliance through continuous ducts, except as permitted in 4.2.3.2 through 4.2.3.5.

4.2.3.2* Underfloor spaces shall be permitted to be used as plenums for return of air from rooms directly above, provided that such spaces are cleaned of all combustible material, are tightly enclosed, and are not used for storage or occupancy.

4.2.3.3 Furnaces, boilers, and other heat-producing appliances shall not be installed in a return plenum such as that described in 4.2.3.2.

4.2.3.4 Accessible abandoned materials shall be deemed to be storage and shall not be permitted to remain.

4.2.3.5 In a single-story residence, the return air shall be permitted to travel through the first-floor living space to the return air inlet on the furnace. *(See 6.3.3.)*

4.2.4 Public Corridors. Public corridors shall not be used as a portion of a supply, return, or exhaust air system serving adjoining areas other than toilet rooms, bathrooms, shower rooms, sink closets, and similar auxiliary spaces opening directly on the corridor.

4.2.4.1 The requirement of 4.2.4 shall not prohibit the use of a corridor as follows:

(1) A source of makeup air through normal leakage around doors for interior exhaust fans in kitchens, appliances, bathrooms, and toilet rooms
(2) A portion of a smoke control system, subject to the approval of the authority having jurisdiction

4.2.5 Negative Pressure from Circulating Fan. The return system and circulating fan shall be arranged so that negative pressure from the circulating fan cannot affect the air supply for combustion or act to draw products of combustion from joints or openings in the furnace or flue.

4.3 Common Requirements.

4.3.1* Duct Coverings and Linings.

4.3.1.1* Duct coverings, duct linings, and tapes used in duct systems shall have a maximum flame spread index of 25 without evidence of continued progressive combustion and a maximum smoke developed index of 50 when tested in accordance with ASTM E 84 or ANSI/UL 723, using the specimen preparation and mounting procedures of ASTM E 2231.

4.3.1.2 The requirements of 4.3.1.1 shall not apply to duct coverings where they are located entirely outside of a building, do not penetrate a wall or roof, and do not create an exposure hazard.

4.3.1.3 Duct coverings and linings shall not flame, glow, smolder, or smoke when tested in accordance with ASTM C 411 at the temperature to which they are exposed in service. In no case shall the test temperature be below 121°C (250°F).

4.3.1.4 Duct coverings shall not extend through walls or floors required to be firestopped or required to have a fire resistance rating.

4.3.1.5 Duct coverings and linings shall be interrupted at the immediate area of operation of heat sources in a duct system that involves electric resistance, fuel-burning heaters, or heat exchangers connected to solar energy collection systems and shall be in accordance with the manufacturer's instructions.

4.3.1.5.1 Solar energy heat exchangers incapable of creating sustained operating temperatures higher than 93°C (200°F) shall not be required to meet the provision of 4.3.1.5.

4.3.1.6 Duct coverings shall not conceal any service opening.

4.3.1.6.1 Where a label is permanently attached to the covering indicating the exact location of the opening, the requirement of 4.3.1.6 shall not be applied.

4.3.1.7 Appliances such as fan coil units, self-contained air-conditioning units, and furnaces shall be considered to meet the requirements of 4.3.1.1 if they are listed.

Copyright 2014 National Fire Protection Association (NFPA). Licensed, by agreement, for individual use and download on October 4, 2014 to LEADER and READER for designated user PATTARAPORN SRITRAKOOL. No other reproduction or transmission in any form permitted without written permission of NFPA. For inquires or to report unauthorized use, contact licensing@nfpa.org.

4.3.1.8 Unlisted solar energy air distribution system components shall be accompanied by supportive information indicating that their flame spread and smoke developed characteristics are not in excess of those of the duct system to which they are connected.

4.3.2* Joints.

4.3.2.1 Joints and seams shall be fastened and made airtight.

4.3.2.2 Slip joints shall have a lap of at least 25.4 mm (1 in.).

4.3.2.3 Slip joints shall be fastened individually per Figure 4.3.2.3.

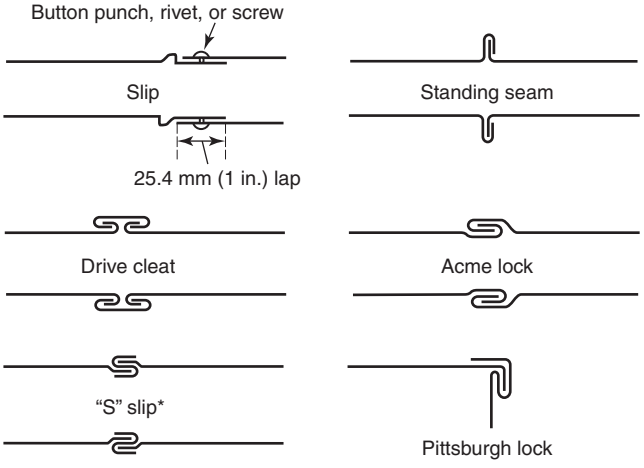

*Used where the joint is otherwise fastened on two sides.

FIGURE 4.3.2.3 Types of Duct Joints.

4.3.2.4 Tape shall be permitted to be used for sealing joints.

4.3.2.4.1 Tape, where exposed to the air in the system, shall have a flame spread index not to exceed 25 and a smoke developed index of not more than 50 when tested to ASTM E 84 or ANSI/UL 723 using the test specimen preparation and mounting method in accordance with ASTM E 2688.

4.3.2.4.2 Mastic and sealants exposed to the air in the system, shall have a flame spread index not to exceed 25 and a smoke developed index of not more than 50 when tested to ASTM E 84 or ANSI/UL 723 using the test specimen preparation and mounting method in accordance with ASTM E 2690.

4.3.2.5 Closure systems for use with rigid and flexible air ducts tested in accordance with ANSI/UL 181 shall have been tested and listed in accordance with ANSI/UL 181A or ANSI/UL 181B.

4.3.2.6 Closure systems shall be used in conformance with the conditions of the listing.

4.3.3 Duct Hangers.

4.3.3.1 Ducts shall be supported by metal hangers, straps, lugs, or brackets.

4.3.3.2 No nails shall be driven through the duct walls, and no unnecessary holes shall be cut therein.

4.3.4 Protection of Vertical Ducts. Where vertical ducts are installed within closets or rooms, they shall be enclosed with materials equivalent to those used in the closet or room construction. *(See 5.1.3.)*

4.3.5 Registers for Ducts and Plenums. Registers shall be constructed of metal or shall conform with 4.3.5.1 through 4.3.5.4.

4.3.5.1 Registers shall be made of a material classified as 94 HB when tested in accordance with ANSI/UL 94.

4.3.5.2 Floor registers shall resist, without structural failure, a 90.7 kg (200 lb) concentrated load on a 51 mm (2 in.) diameter disc applied to the most critical area of the exposed face of the register.

4.3.5.2.1 The register shall be at a temperature not less than 74°C (165°F).

4.3.5.2.2 The register shall be supported in accordance with the manufacturer's instructions.

4.3.5.3 Electric or fuel-fired furnace systems shall have at least one register or grille without a closable shutter.

4.3.5.3.1 The duct leading thereto shall be without a damper.

4.3.5.3.2 Dampers and shutters shall be allowed where they cannot shut off more than 80 percent of the duct area.

4.3.5.4 Fittings connecting the registers to the duct system shall be constructed of metal or material that complies with the requirements of Class 0, Class 1, or Class 2 ducts in ANSI/UL 181.

4.3.6 Pipeless Furnace Registers. Where registers are installed in the floor over the furnace, as in the case of a "pipeless" furnace, the register box shall be of double-walled construction with an air space not less than 102 mm (4 in.).

4.3.6.1 The register box shall be permitted to not meet the requirements of 4.3.6 where the warm air passage is surrounded by a cold air passage.

4.3.7 Use of Concealed Ceiling Spaces as Supply or Return Plenums. Where concealed ceiling spaces are to be used for air chambers or plenums, the following shall apply:

(1) Such installations shall be limited to detached single-family dwellings.
(2) No concealed ceiling space plenum shall serve more than one story of a detached single-family dwelling.
(3) This shall not preclude separate installations on each floor of the detached single-family dwelling.
(4) The concealed space plenum shall be separated from any other concealed spaces.
(5) The plenum or concealed ceiling spaces shall be enclosed completely with construction not more flammable than 25.4 mm (1 in.) (nominal) wood boards.
(6) Plenum or concealed ceiling spaces shall not be used for storage or occupancy.
(7) Accessible abandoned materials shall be deemed to be storage and shall not be permitted to remain.
(8) No ventilating system shall discharge into such plenum or concealed ceiling spaces.
(9) Units supplying such plenum or concealed ceiling spaces shall be designed to limit the temperature of the air discharged into the supply plenum or chamber to 74°C (165°F).
(10) Where units incorporate heating elements, heated surfaces, or combustion chambers that develop temperatures higher than 74°C (165°F), such components shall

Copyright 2014 National Fire Protection Association (NFPA). Licensed, by agreement, for individual use and download on October 4, 2014 to LEADER and READER for designated user PATTARAPORN SRITRAKOOL. No other reproduction or transmission in any form permitted without written permission of NFPA. For inquires or to report unauthorized use, contact licensing@nfpa.org.

be designed to prevent direct radiation onto combustible material when the unit is installed.

(11) The installation of the unit supplying such plenum or concealed ceiling spaces shall not produce negative pressure in the attic where the attic is the source of air for combustion for fuel-fired equipment.

4.3.8 Air Dispersion Systems. Air dispersion systems shall:

(1) Be installed entirely in exposed locations
(2) Be utilized in systems under positive pressure
(3) Not pass through or penetrate fire-resistant-rated construction
(4) Be listed and labeled in compliance with UL 2518

Chapter 5 Fire Integrity of Building Construction

5.1 Clearances to Combustible Material.

5.1.1 General. Where ducts are adjacent to plaster on metal lath or to some other noncombustible finish attached to a combustible material, the clearance shall be measured to the combustible material.

5.1.1.1 The clearance shall be measured to the surface of the plaster or other noncombustible finish where a clearance of 51 mm (2 in.) or less is specified above a bonnet or plenum chamber or above supply ducts.

5.1.1.1.1 The requirement of 5.1.1.1 shall not be construed to prohibit the closure of openings with noncombustible material where ducts pass through walls and partitions, as provided in 5.1.2.

5.1.1.2 Where an appliance, ductwork, or a chimney or vent connection is listed for different clearances, the listed clearances shall apply.

5.1.2 Clearances from Horizontal Supply Ducts. Minimum clearances from horizontal supply ducts to combustible materials shall be as follows in 5.1.2.1 through 5.1.2.8.

5.1.2.1 Within a distance of 0.91 m (3 ft) of the plenum of a system classified under A, C, or G of Table 5.1.2.1, the clearance shall be not less than that specified above the bonnet or plenum.

5.1.2.2 Within a distance of 1.83 m (6 ft) of the plenum of a system classified under B or D of Table 5.1.2.1, the clearance shall be not less than 152 mm (6 in.).

5.1.2.3 From ducts of furnaces classified under D of Table 5.1.2.1, the clearance shall be not less than 25.4 mm (1 in.) beyond 1.83 m (6 ft) from the plenum to a point where there is a change in direction of 90 degrees or more.

5.1.2.4 From ducts of furnaces classified under F of Table 5.1.2.1, the following requirements shall apply:

(1) The clearance shall be not less than 457 mm (18 in.) up to 0.91 m (3 ft) from the bonnet or plenum.
(2) The clearance shall be not less than 152 mm (6 in.) for 0.91 m (3 ft) to 1.83 m (6 ft) from the bonnet or plenum.
(3) The clearance shall be not less than 25.4 mm (1 in.) beyond 1.83 m (6 ft) from the bonnet or plenum.

5.1.2.5 No clearance shall be required beyond the distances from the plenum or change in direction specified in 5.1.2.1 and 5.1.2.2.

5.1.2.6 Where a horizontal supply duct passes through or pierces a partition or enclosure constructed of combustible material, within the distances or point of change in direction specified in 5.1.2.1, 5.1.2.2, and 5.1.2.3, the clearance shall be not less than that specified in those paragraphs.

5.1.2.7 The ends of the space providing this clearance shall be permitted to be closed with a thimble and collar, or the wall surfaces shall be extended to the duct with noncombustible building material such as plaster on metal lath. *[See Figure 5.1.2.7(a) and Figure 5.1.2.7(b).]*

5.1.2.8 Separate air-cooling system ducts that are made of materials other than noncombustible material shall be installed with clearances to warm air ducts as required in 5.1.2.1, 5.1.2.2, and 5.1.2.3.

5.1.3 Clearances from Vertical Ducts, Risers, Boots, and Register Boxes.

5.1.3.1 Where a duct, riser, boot, or box on a system that does not require 457 mm (18 in.) clearance above the supply plenum or bonnet enters a floor, partition, or enclosure constructed of combustible material within the distances from the plenum specified in 5.1.2.1 and 5.1.2.2, the clearance from such a duct, riser, boot, or box shall be not less than the distance required above the furnace bonnet or plenum per Table 5.1.2.1.

5.1.3.1.1 Alternatively, the duct shall change in a direction equivalent to at least two 90-degree turns before entering such floor, partition, or enclosure.

5.1.3.1.2 These requirements shall not apply to pipeless furnaces as specified in 4.3.6.

5.1.3.2 Where a supply duct enters the floor of the first story above that story on which the furnace is located, the space around the duct at such points shall be sealed with noncombustible material.

5.1.3.3 Where a duct, riser, boot, or box on a system that requires 457 mm (18 in.) of clearance above the supply plenum or bonnet enters a floor, partition, or enclosure constructed of combustible material within a horizontal distance of 1.83 m (6 ft) of the furnace, the duct shall be arranged so that heated air travels at least 1.83 m (6 ft) from the closest primary heating surface and changes direction equivalent to at least one 90-degree turn before entering such a floor, partition, or enclosure.

5.1.3.4 Where a duct, riser, boot, or box on a system that requires 457 mm (18 in.) of clearance above the supply plenum or bonnet enters the floor of the first story above that story on which the furnace is situated, the clearance shall be at least 4.76 mm (3⁄16 in.) from all combustible material in the floor construction.

5.1.3.4.1 Where the duct is of double-wall construction with a continuous air space of not less than 4.76 mm (3⁄16 in.) between the inner and outer walls, 5.1.3.4 shall not apply.

5.1.3.5 Where a duct or riser on a system that requires 457 mm (18 in.) of clearance above the supply plenum or bonnet is enclosed in a partition, wall, or concealed space, constructed in whole or in part of combustible material, 5.1.3.5.1, 5.1.3.5.2, or 5.1.3.5.3 shall apply.

5.1.3.5.1 The duct shall be installed with an air space of not less than 4.76 mm (3⁄16 in.) between the duct and combustible material.

Copyright 2014 National Fire Protection Association (NFPA). Licensed, by agreement, for individual use and download on October 4, 2014 to LEADER and READER for designated user PATTARAPORN SRITRAKOOL. No other reproduction or transmission in any form permitted without written permission of NFPA. For inquires or to report unauthorized use, contact licensing@nfpa.org.

Table 5.1.2.1 Clearances to Combustible Material for Furnaces, Boilers, Solar Energy Heating Devices, and Heat Exchangers Installed in Rooms That Are Large in Comparison with Size of Appliance

	Minimum Clearance									
	Above and Sides of Bonnet or Plenum		Jacket Sides and Rear		Front[a]		Projecting Flue Box or Draft Hood		Chimney or Vent Connector	
System/Component	mm	in.	mm	in.	mm	in.	mm	in.	mm	in.
A. Listed automatically fired, forced air or gravity system with 121°C (250°F) temperature limit control										
Burning liquid fuel	51[b]	2[b]	152	6	610	24	457	18	457	18
Burning gas fuel	51[b]	2[b]	152	6	457	18	152	6	152	6
Utilizing electricity	51[b]	2[b]	152	6	457	18	—	—	—	—
B. Unlisted automatically fired, forced air or gravity system with temperature limit control that cannot be set higher than 121°C (250°F)										
Burning liquid fuel	152	6	152	6	610	24	457	18	457	18
Burning gas fuel	152	6	152	6	457	18	457[c]	18[c]	457[c]	18[c]
Utilizing electricity	152	6	152	6	457	18	—	—	—	—
C. Steam or hot water heat exchanger — steam not over 103 kPa (15 psi) pressure and hot water not more than 121°C (250°F)	51	2	51	2	51	2	—	—	—	—
D. Automatically stoker-fired, forced air system equipped with 121°C (250°F) temperature limit control with a barometric draft control[d]										
Burning solid fuel	152	6	152	6	1219	48	457	18	457	18
E. Heating boilers used in central warm air heating systems — steam boiler operating at not over 103 kPa (15 psi) gauge pressure and hot water boilers operating at no more than 121°C (250°F) of the water wall–type or having a jacket or lining of masonry or other satisfactory material										
Burning liquid fuel	152[e]	6[e]	152	6	610	24	457	18	457	18
Burning gas fuel	152[e]	6[e]	152	6	457	18	229[f]	9[f]	229[f]	9[f]
Burning solid fuel	152[e]	6[e]	152	6	1219	48	457	18	457	18
Utilizing electricity	152[e]	6[e]	152	6	457	18	—	—	—	—
F. Furnaces and heating boilers used in central warm air heating systems, other than above										
Burning liquid fuel	457	18	457	18	1219	48	457	18	457	18
Burning gas fuel	457	18	457	18	457	18	457[c]	18[c]	457[c]	18[c]
Burning solid fuel	457	18	457	18	1219	48	457	18	457	18
G. Solar energy heat exchangers operating at a temperature not in excess of 121°C (250°F)	51[g]	2[g]	51[g]	2[g]	51[g]	2[g]	—	—	—	—

[a] Front clearance shall be sufficient for servicing the burner and furnace or boiler.

[b] This clearance shall be permitted to be reduced to 25.4 mm (1 in.) for a listed forced air or gravity furnace equipped with a limit control that limits outlet air temperatures to 93°C (200°F).

[c] For unlisted gas appliances equipped with an approved draft hood, this clearance shall be permitted to be reduced to 229 mm (9 in.).

[d] The barometric draft control shall be operated by draft intensity and permanently set to limit the draft to a maximum intensity of 32.4 Pa (0.13 in.) of water gauge.

[e] This clearance is above top of boiler.

[f] This clearance shall be permitted to be reduced to 152 mm (6 in.) for listed gas burning furnaces and boilers.

[g] This clearance also shall apply to ducts from solar collectors to heat exchangers or thermal storage systems.

Copyright 2014 National Fire Protection Association (NFPA). Licensed, by agreement, for individual use and download on October 4, 2014 to LEADER and READER for designated user PATTARAPORN SRITRAKOOL. No other reproduction or transmission in any form permitted without written permission of NFPA. For inquires or to report unauthorized use, contact licensing@nfpa.org.

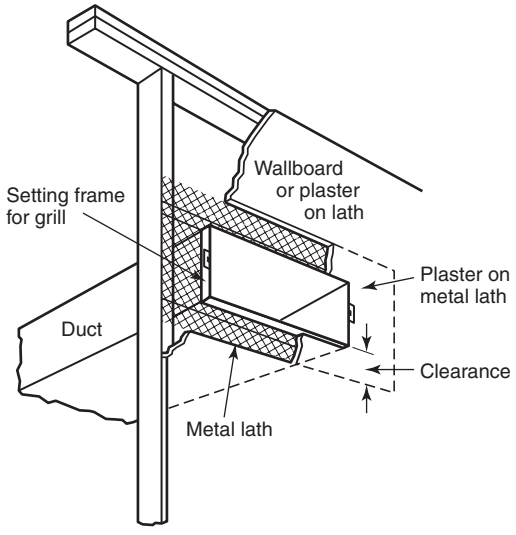

FIGURE 5.1.2.7(a) An Arrangement for Closing Ends of Clearance Space Around a Supply Duct. A similar arrangement can be used where a duct continues through the partition.

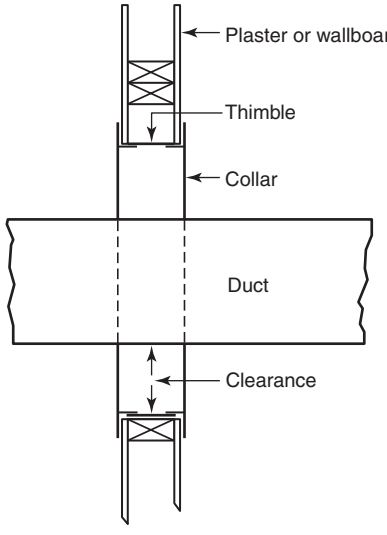

FIGURE 5.1.2.7(b) An Arrangement for Passing Ducts Through Combustible Walls or Partitions as Specified in 5.1.2.5.

5.1.3.5.2 Where a noncombustible insulating covering of the cellular type that is at least 3.18 mm (⅛ in.) thick is provided using metal lath and plaster partitions, no air space shall be required except from wood studs.

5.1.3.5.3 The duct shall be double-walled with a continuous air space of not less than 4.76 mm (3⁄16 in.) between the inner and outer walls.

5.1.3.6 Where a register on a system that requires 457 mm (18 in.) of clearance above the supply plenum or bonnet is placed in a floor or wall constructed of combustible material, the register box shall be installed with a clear space of not less than 4.76 mm (3⁄16 in.) between the top and sides of the box and any combustible material.

5.1.4 Clearances from Furnaces, Boilers, Heat Exchangers, Heat Pumps, and Cooling Units.

5.1.4.1 Minimum clearances from furnaces, boilers, heat exchangers and their flue boxes, draft hoods, or chimney or vent connectors that are installed in rooms that are large in comparison with the size of the appliance shall be as specified in 5.1.3.1, unless otherwise provided in 5.1.1 and 5.1.4.2.

5.1.4.2 Heating furnaces and boilers used in residence-type central warm air heating systems shall be permitted to be installed in rooms that are large in comparison with the size of the appliance with clearances reduced as designated in Table 5.1.4.2 where combustible material is protected in the manner specified per Figure 5.1.4.2(a), Figure 5.1.4.2(b), and Figure 5.1.4.2(c).

5.1.4.2.1 The reductions specified in Table 5.1.4.2 shall not apply to installations in alcoves or closets.

5.1.4.3 Furnaces and boilers used in residence-type central warm air heating systems shall not be installed in a confined space such as an alcove or closet.

5.1.4.3.1 Furnaces and boilers specifically approved for such installations, where installed in compliance with their listing and with the clearances from the walls and ceiling of the alcove or closet not less than specified, regardless of the type of construction, shall not be required to meet the provision of 5.1.4.3.

5.1.4.4 Cooling units, heat pumps, and equipment involving furnaces, boilers, or electric resistance heating shall not be installed in an attic or in any other space in the building construction that is used as a supply or return plenum.

5.1.4.4.1 Cooling units, heat pumps, and heating equipment shall be permitted to be installed in such a supply or return plenum where specifically approved for such use as a result of tests and listing by an approved testing laboratory.

5.1.4.4.2 Cooling units, heat pumps, or heating equipment shall be installed in accordance with the conditions of such approval.

5.1.4.5 Furnaces, boilers, heat exchangers, heat pumps, solar energy system components, and air-conditioning and cooling units shall be installed to provide accessibility for the following:

(1) Cleaning heating surfaces
(2) Removing and replacing burners, motors, compressors, controls, air filters, draft regulators, and other working parts
(3) Adjusting, cleaning, and lubricating parts requiring such attention

5.2 Firestopping.

5.2.1 Where the installation of ducts in walls, floors, or partitions necessitates the removal of any firestopping, the spaces around the duct at such points where firestopping was removed shall be sealed with noncombustible insulating material.

5.2.2 Where spaces between studs in walls or partitions are used as return ducts, the portions of such spaces so used shall be cut off from all remaining unused portions by tight-fitting stops made of sheet metal or wood that is not less than 51 mm (2 in.) (nominal) thickness. Such spaces shall not be used as a supply duct.

Copyright 2014 National Fire Protection Association (NFPA). Licensed, by agreement, for individual use and download on October 4, 2014 to LEADER and READER for designated user PATTARAPORN SRITRAKOOL. No other reproduction or transmission in any form permitted without written permission of NFPA. For inquires or to report unauthorized use, contact licensing@nfpa.org.

Table 5.1.4.2 Reduction of Clearances with Specified Forms of Protection

	Required Clearance with No Protection from Appliance and Vent Connector for Single-Wall Metal Pipe																	
	914 mm (36 in.)				457 mm (18 in.)				305 mm (12 in.)				229 mm (9 in.)				152 mm (6 in.)			
	Allowable Clearance with Specified Protection																	
	Above		Sides and Rear		Above		Sides and Rear		Above		Sides and Rear		Above		Sides and Rear		Above		Sides and Rear	
Type of Protection*	mm	in.	mm	in.	mm	in.	mm	in.	mm	in.	mm	in.	mm	in.	mm	in.	mm	in.	mm	in.
89 mm (3½ in.) thick masonry wall without ventilated air space	—	—	610	24	—	—	305	12	—	—	229	9	—	—	152	6	—	—	127	5
12.7 mm (½ in.) insulation board over 25.4 mm (1 in.) glass fiber or mineral wool batts	610	24	457	18	305	12	229	9	229	9	152	6	152	6	127	5	102	4	76	3
0.6 mm (0.024 in.) (24-gauge) sheet metal over 25.4 mm (1 in.) glass fiber or mineral wool batts reinforced with wire on rear face with ventilated air space	457	18	305	12	229	9	152	6	152	6	102	4	127	5	76	3	76	3	76	3
89 mm (3½ in.) thick masonry wall with ventilated air space	—	—	305	12	—	—	152	6	—	—	152	6	—	—	152	6	—	—	152	6
0.6 mm (0.024 in.) (24-gauge) sheet metal with ventilated air space	457	18	305	12	229	9	152	6	152	6	102	4	127	5	76	3	76	3	51	2
12.7 mm (½ in.) insulation board with ventilated air space	457	18	305	12	229	9	152	6	152	6	102	4	127	5	76	3	76	3	76	3
0.6 mm (0.024 in.) (24-gauge) sheet metal with ventilated air space over 0.6 mm (0.024 in.) (24-gauge) sheet metal with ventilated air space	457	18	305	12	229	9	152	6	152	6	102	4	127	5	76	3	76	3	76	3
25.4 mm (1 in.) glass fiber or mineral wool batts sandwiched between two sheets 0.6 mm (0.024 in.) (24-gauge) sheet metal with ventilated air space	457	18	305	12	229	9	152	6	152	6	102	4	127	5	76	3	76	3	76	3

*Applied to and covering all surfaces of combustible material within the distance specified as the required clearance with no protection.

Notes:

(1) Reduction of clearances from combustible materials shall not interfere with combustion air, draft hood clearance and relief, and accessibility of servicing.

(2) All clearances shall be measured from the outer surface of the combustible material to the nearest point on the surface of the appliance, disregarding any intervening protection applied to the combustible material.

(3) Spacers and ties shall be of noncombustible material. No spacer or tie shall be used directly opposite an appliance or connector.

(4) With all clearance reduction systems using a ventilated air space, means for air circulation shall be provided as described. *[See Figure 5.1.4.2(b) and Figure 5.1.4.2(c).]*

(5) There shall be at least 25.4 mm (1 in.) of clearance between the reduction system and combustible walls and ceilings for reduction systems using ventilated air space.

(6) If a wall protector is mounted on a single flat wall away from corners, adequate air circulation shall be permitted to be provided by leaving only the bottom and top edges, or only the side and top edges, open with at least a 25.4 mm (1 in.) air gap.

(7) Mineral wool batts (blanket or board) shall have a minimum density of 128 kg/m^3 (8 lb/ft^3) and a minimum melting point of 816°C (1500°F).

(8) Insulation material used as part of the clearance reduction system shall have a thermal conductivity of 1.0 (Btu-in.)/(ft-hr-°F) (SI = 1 W/m^2 · K) or less.

(9) There shall be at least 25.4 mm (1 in.) between the appliance and the protector. In no case shall the clearance between the appliance and the combustible surface be reduced below that permitted by the table.

(10) All clearances and thicknesses are minimum; larger clearances and thicknesses shall be permitted.

Copyright 2014 National Fire Protection Association (NFPA). Licensed, by agreement, for individual use and download on October 4, 2014 to LEADER and READER for designated user PATTARAPORN SRITRAKOOL. No other reproduction or transmission in any form permitted without written permission of NFPA. For inquires or to report unauthorized use, contact licensing@nfpa.org.

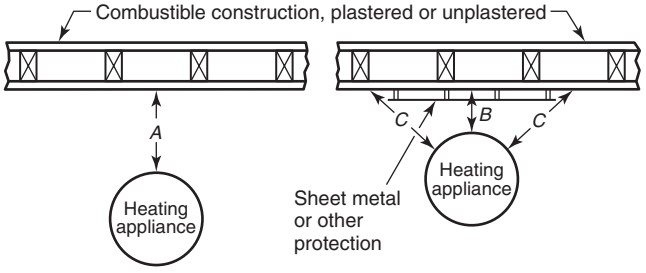

A equals the required clearance with no protection as specified in Table 5.1.2.1.

B equals the reduced clearance permitted in accordance with Table 5.1.4.2.

The protection applied to construction using combustible material shall be required to extend far enough in each direction so that *C* equals *A*.

FIGURE 5.1.4.2(a) Sheet Metal or Other Protection to Reduce Required Clearance from Heating Appliance.

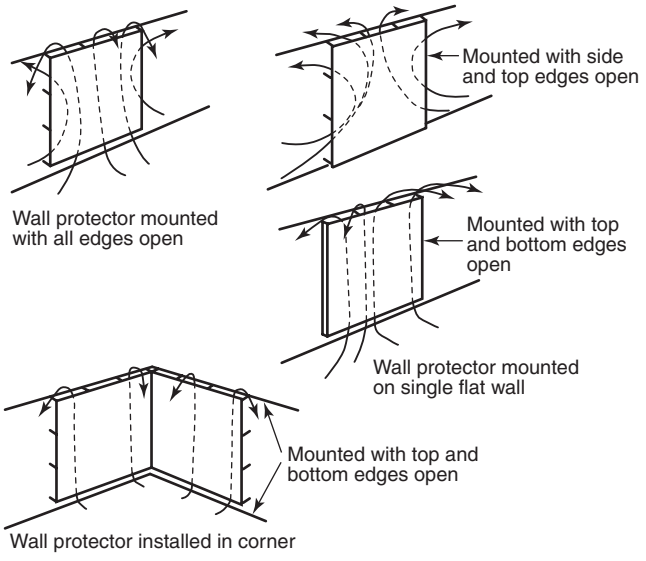

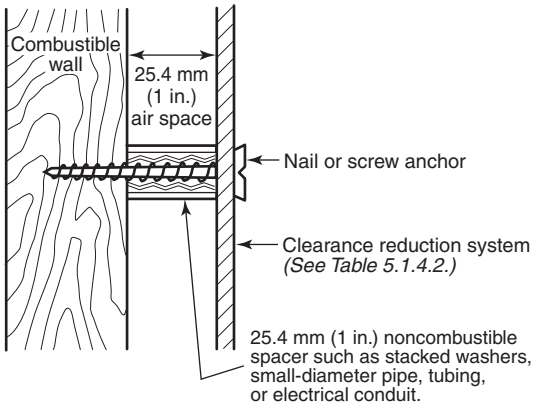

Masonry walls shall be permitted to be attached to combustible walls using wall ties.

Spacers shall not be used directly behind appliance or connector.

FIGURE 5.1.4.2(b) Wall Protector Clearance Reduction System.

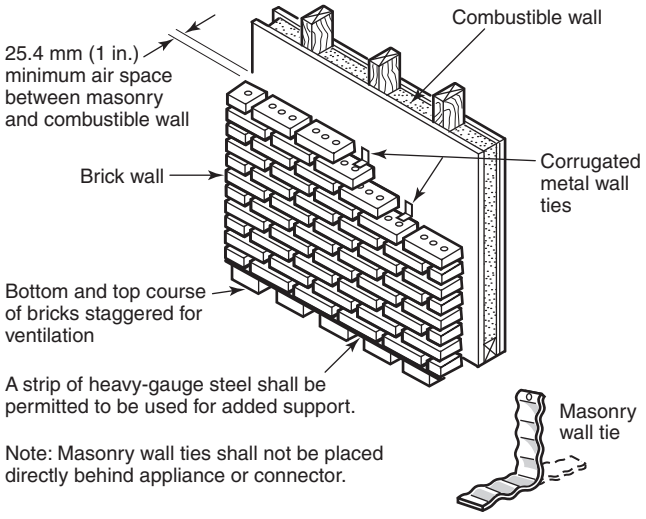

FIGURE 5.1.4.2(c) Masonry Clearance Reduction System.

Chapter 6 Equipment, Wiring, and Controls

6.1 Equipment.

6.1.1 Heating Panels.

6.1.1.1 Air chambers that have one or more external surface designed for use as heating panels shall be used only with the following:

(1) Automatically fired gas-burning or oil-burning forced warm air systems equipped with temperature limit controls that limit furnace outlet air temperature to 93°C (200°F)
(2) Forced warm air systems equipped with heat exchangers utilizing steam that cannot exceed 103 kPa (15 psi) gauge pressure or hot water that cannot exceed a temperature of 121°C (250°F)

6.1.1.2 Connection. Heating panels shall be connected to supply and return air ducts that conform to this standard.

6.1.1.3 Construction.

6.1.1.3.1 Heating panels shall be enclosed on all sides.

6.1.1.3.2 The enclosure material shall be attached to the building structure.

6.1.1.3.3 Joints and seams shall be airtight.

6.1.1.3.4 Where the warm air supply is from a warm air furnace, braces and hangers inside the chamber shall be noncombustible and the enclosure material shall be constructed of one of the materials in 6.1.1.3.6.

6.1.1.3.5 Where the warm air supply is from a steam or hot water exchanger, no single vertical heating panel shall serve more than one story and the enclosure material shall be constructed of one of the materials in 6.1.1.3.6.

6.1.1.3.6 Materials of construction of the enclosure shall be one of the following:

(1) Material that is wholly noncombustible
(2) Material that exhibits a flame spread index not exceeding 25 when tested in accordance with ASTM E 84 or ANSI/UL 723

Copyright 2014 National Fire Protection Association (NFPA). Licensed, by agreement, for individual use and download on October 4, 2014 to LEADER and READER for designated user PATTARAPORN SRITRAKOOL. No other reproduction or transmission in any form permitted without written permission of NFPA. For inquires or to report unauthorized use, contact licensing@nfpa.org.

(3) Material that complies with the following when tested in accordance with NFPA 286:
   (a) During the 40 kW exposure, flames shall not spread to the ceiling.
   (b) The flame shall not spread to the outer extremity of the sample on any wall or ceiling.
   (c) Flashover, as defined in NFPA 286, shall not occur.
   (d) The peak heat release rate throughout the test shall not exceed 800 kW.
   (e) The total smoke released throughout the test shall not exceed 1000 m^2 (10,760 ft^2).

6.1.2 Downflow Systems.

6.1.2.1 Downflow heating equipment shall be designed or equipped so that the outlet air temperature shall not exceed 93°C (200°F).

6.1.2.1.1 For systems installed under the provisions of 4.3.7, the outlet air temperature shall be limited to 74°C (165°F).

6.1.2.2 Equipment shall be designed to prevent unsafe temperature in the event of reverse flow or fan failure.

6.1.3 Air Filters.

6.1.3.1 Air filters shall comply with ANSI/UL 900.

6.1.3.2 An evaporative cooler containing a combustible filter and water evaporation medium, such as excelsior, shall not be used.

6.1.3.3 Liquid adhesive coatings used on filters shall have a flash point not less than 163°C (325°F) in accordance with ASTM D 93.

6.1.4 Air-Cooling Equipment.

6.1.4.1 Mechanical refrigeration used with air duct systems shall be installed in accordance with ANSI/ASHRAE 15.

6.1.4.2 Evaporative coolers containing a combustible evaporating medium, such as excelsior, shall not be used.

6.1.4.2.1 The use of evaporation media in accordance with the requirements of 6.1.3.1 shall be permitted.

6.1.5 Furnaces Used with Cooling Units.

6.1.5.1 Furnaces that are combination units in which a refrigeration coil is provided shall have the refrigeration coil located downstream from or parallel to the heating furnace.

6.1.5.1.1 The requirements in 6.1.5.1 shall not apply where the heating furnace is specifically approved for installation downstream from the coil.

6.1.5.2 Where the heating furnace is located upstream from the coil, the coil shall be designed or equipped to prevent the development of excessive temperatures or pressures.

6.1.5.2.1 In those cases where the coil is located parallel to the heating furnace, dampers or other means to control the flow of air shall be provided to prevent chilled air from entering the furnace section.

6.1.5.2.2 Means shall be provided for the disposal of condensate and to prevent dripping of condensate on the heating element.

6.1.5.2.3 Manually operated dampers shall not be required to be provided with means to prevent operation of either unit, provided the damper is in the full heat or cool position.

6.1.5.3 Furnaces, including duct furnaces, shall be permitted to be installed downstream from evaporative coolers or air washers under the following conditions:

(1) The condensate cannot fall into any portion of burners, pilots, or burner carryover arms.
(2) The heating element is made of corrosion-resistant material, such as stainless steel, ceramic-coated steel, or an aluminum-coated steel in which the bond between the steel and the aluminum is an iron–aluminum alloy.

6.1.5.4 Air washers operating with chilled water that delivers air below the dew point of the ambient air at the appliance shall be considered as refrigeration systems.

6.1.5.5 The blower shall be of capacity as to overcome the external static resistance imposed by the combined heating and cooling units at the air throughput required for heating or cooling, whichever is greater.

6.1.6 Boilers Used with Cooling Units.

6.1.6.1 Where the same coil is used for both heating and cooling, valves shall be provided to prevent chilling of the boiler during the operation of the cooling system.

6.1.6.2 Where hot water heating boilers are connected to heating coils located in air-handling units and where they are exposed to refrigerated air circulation, such boiler piping systems shall be equipped with flow control valves or other automatic means to prevent gravity circulation of the boiler water during the cooling cycle.

6.1.7 Heat Pump Systems. Heat pump systems involving units or equipment installed in attics or in a space in the building construction used as a supply or return plenum shall conform to the provisions of 4.3.7 and 5.1.4.

6.1.8 Solar Systems.

6.1.8.1 Solar systems or solar-assisted systems shall be designed, constructed, and controlled so that the air temperature in the supply system shall not exceed 121°C (250°F).

6.1.8.2 A flammable or combustible heat transfer fluid from a solar energy system shall not be used in a heat exchanger located in a duct system.

6.2 Electric Wiring and Equipment.

6.2.1 Electric wiring and equipment shall be installed for safe operation.

6.2.2 Electric wiring and equipment shall be installed in accordance with *NFPA 70*.

6.2.3 A disconnecting means shall be installed within sight and reach in the ungrounded leads of each power circuit to electrically operated components that are in unprotected locations and in other locations not accessible for service.

6.3 Controls.

6.3.1 Temperature Limit Controls.

6.3.1.1 Temperature limit controls shall be of a listed type.

6.3.1.2 Temperature limit controls shall be such that they cannot be set higher than a specified temperature setting.

6.3.1.3 Temperature limit controls shall be located no more than 0.61 m (2 ft) downstream from the heat exchanger.

Copyright 2014 National Fire Protection Association (NFPA). Licensed, by agreement, for individual use and download on October 4, 2014 to LEADER and READER for designated user PATTARAPORN SRITRAKOOL. No other reproduction or transmission in any form permitted without written permission of NFPA. For inquires or to report unauthorized use, contact licensing@nfpa.org.

6.3.2 Fan Control for Stoker-Fired Furnaces. Where a warm air furnace equipped with a fan to circulate the air is stoker-fired, it also shall be equipped with an automatic overrun control to start the fan when the air in the furnace bonnet or the air at the beginning of the main supply duct at a point not affected by radiated heat reaches a temperature not higher than 93°C (200°F) after the stoker and fan (in its normal operation) have been shut down as a result of a satisfied thermostat.

6.3.2.1 If a manual disconnect is installed in the air-circulating fan electrical circuit, it shall be installed to de-energize both the fan and the stoker simultaneously.

6.3.3* Air for Combustion and Ventilation. Heating appliances shall be installed in a location in which the facilities for ventilation provide for combustion and ventilation under normal conditions of operation and use.

6.3.4 Thermostatically Controlled, Hand-Fired, Solid Fuel–Burning Furnaces. Hand-fired, solid fuel–burning furnaces on which the furnace draft is controlled by a thermostat shall be equipped with the following:

(1)*A fail-safe 121°C (250°F) limit control installed not more than 254 mm (10 in.) above the top surface of the heat exchanger in a supply plenum that extends at least 305 mm (12 in.) above the top surface of the heat exchanger
(2) A barometric draft control operated by draft intensity and permanently set to limit the draft to a maximum intensity of 32.4 Pa (0.13 in.)

6.3.5 Air-Circulating Fan Controls. Where a hand-fired, solid fuel–burning furnace is equipped with a fan to circulate the air, it shall be equipped with fan controls as required for stoker-fired furnaces by 6.3.2.

6.3.6 Accessory Equipment. Material used in the construction of accessory equipment attached to or installed in a supply or return system shall comply with the requirements for the materials of that portion of the system to which it is attached.

6.3.6.1 This requirement shall not preclude the attachment to a plenum or duct of small devices, such as humidifiers, specifically listed for such use.

6.3.6.2 Motors and electrical wiring and equipment shall comply with Section 6.2.

Annex A Explanatory Material

Annex A is not a part of the requirements of this NFPA document but is included for informational purposes only. This annex contains explanatory material, numbered to correspond with the applicable text paragraphs.

A.1.1 For other types of systems, see NFPA 90A. For installation of blower and exhaust systems, see NFPA 91. For removal of smoke and grease-laden vapors from commercial cooking equipment, see NFPA 96.

A.3.2.1 Approved. The National Fire Protection Association does not approve, inspect, or certify any installations, procedures, equipment, or materials; nor does it approve or evaluate testing laboratories. In determining the acceptability of installations, procedures, equipment, or materials, the authority having jurisdiction may base acceptance on compliance with NFPA or other appropriate standards. In the absence of such standards, said authority may require evidence of proper installation, procedure, or use. The authority having jurisdiction may also refer to the listings or labeling practices of an organization that is concerned with product evaluations and is thus in a position to determine compliance with appropriate standards for the current production of listed items.

A.3.2.2 Authority Having Jurisdiction (AHJ). The phrase "authority having jurisdiction," or its acronym AHJ, is used in NFPA documents in a broad manner, since jurisdictions and approval agencies vary, as do their responsibilities. Where public safety is primary, the authority having jurisdiction may be a federal, state, local, or other regional department or individual such as a fire chief; fire marshal; chief of a fire prevention bureau, labor department, or health department; building official; electrical inspector; or others having statutory authority. For insurance purposes, an insurance inspection department, rating bureau, or other insurance company representative may be the authority having jurisdiction. In many circumstances, the property owner or his or her designated agent assumes the role of the authority having jurisdiction; at government installations, the commanding officer or departmental official may be the authority having jurisdiction.

A.3.2.3 Listed. The means for identifying listed equipment may vary for each organization concerned with product evaluation; some organizations do not recognize equipment as listed unless it is also labeled. The authority having jurisdiction should utilize the system employed by the listing organization to identify a listed product.

A.3.3.3.2 Gravity System. An integral fan or blower that is used only to overcome the internal furnace resistance to airflow is permitted.

A.4.1 The provisions of Section 4.1 do not require inherently noncombustible materials to be tested in order to be classified as noncombustible materials. [***101:*** A.4.6.13]

A.4.1.1.1 Air duct materials are classified in ANSI/UL 181 as follows:

(1) Class 0 — Air duct materials having a fire hazard classification of zero (flame spread and smoke developed)
(2) Class 1 — Air duct materials having a flame spread index of not over 25 without evidence of continued progressive combustion and a smoke developed index of not over 50

A.4.1.1.2 See NAIMA *Fibrous Glass Duct Construction Standard* for additional information.

A.4.1.4(17) Additional information can be found in NFPA 31 and NFPA 54.

A.4.2.3.2 Additional information can be found in NFPA 31 and NFPA 54.

A.4.3.1 See NAIMA *Fibrous Glass Duct Liner Standard* for additional information.

A.4.3.1.1 ASTM E 2231 is a practice that describes, in mandatory language, standard methods for specimen preparation and mounting of pipe and duct insulation systems using the Steiner tunnel test method (contained in ASTM E 84). It requires that the entire system that is used in the field be tested, including the insulation itself, any adhesive, and/or any jacket used. The practice recognizes that pipe or duct insulation systems can be composed of a single product or of a combination of products, and that these have a variety of physical characteristics, including that they may or may not be self-supporting.

Copyright 2014 National Fire Protection Association (NFPA). Licensed, by agreement, for individual use and download on October 4, 2014 to LEADER and READER for designated user PATTARAPORN SRITRAKOOL. No other reproduction or transmission in any form permitted without written permission of NFPA. For inquires or to report unauthorized use, contact licensing@nfpa.org.

A.4.3.2 Additional information can be found in the category "Fabrics" in the UL *Building Materials Directory*.

A.6.3.3 Additional information can be found in NFPA 31 and NFPA 54.

A.6.3.4(1) A fail-safe limit control is a limit control that automatically checks the furnace in the event of power failure or shutoff or that automatically checks the furnace when a temperature of 121°C (250°F) is reached, whether or not power is available.

Annex B Informational References

B.1 Referenced Publications. The documents or portions thereof listed in this annex are referenced within the informational sections of this standard and are not part of the requirements of this document unless also listed in Chapter 2 for other reasons.

B.1.1 NFPA Publications. National Fire Protection Association, 1 Batterymarch Park, Quincy, MA 02169-7471.

NFPA 31, *Standard for the Installation of Oil-Burning Equipment*, 2011 edition.

NFPA 54, *National Fuel Gas Code*, 2015 edition.

NFPA 90A, *Standard for the Installation of Air-Conditioning and Ventilating Systems*, 2015 edition.

NFPA 91, *Standard for Exhaust Systems for Air Conveying of Vapors, Gases, Mists, and Noncombustible Particulate Solids*, 2010 edition.

NFPA 96, *Standard for Ventilation Control and Fire Protection of Commercial Cooking Operations*, 2014 edition.

B.1.2 Other Publications.

B.1.2.1 ASTM Publications. ASTM International, 100 Barr Harbor Drive, P.O. Box C700, West Conshohocken, PA 19428-2959.

ASTM E 84, *Standard Test Method for Surface Burning Characteristics of Building Materials,* 2013a.

ASTM E 2231, *Standard Practice for Specimen Preparation and Mounting of Pipe and Duct Insulation Materials to Assess Surface Burning Characteristics,* 2009.

B.1.2.2 NAIMA Publications. North American Insulation Manufacturers Association, 44 Canal Center Plaza, Suite 310, Alexandria, VA 22314.

Fibrous Glass Duct Construction Standard, 5th edition, 2002.

Fibrous Glass Duct Liner Standard, 3rd edition, 2002.

B.1.2.3 UL Publications. Underwriters Laboratories Inc., 333 Pfingsten Road, Northbrook, IL 60062-2096.

ANSI/UL 181, *Standard for Safety Factory-Made Air Ducts and Air Connectors,* 2013.

Building Materials Directory, 2012.

B.2 Informational References. (Reserved)

B.3 References for Extracts in Informational Sections.

NFPA *101*®, *Life Safety Code*®, 2015 edition.

Copyright 2014 National Fire Protection Association (NFPA). Licensed, by agreement, for individual use and download on October 4, 2014 to LEADER and READER for designated user PATTARAPORN SRITRAKOOL. No other reproduction or transmission in any form permitted without written permission of NFPA. For inquires or to report unauthorized use, contact licensing@nfpa.org.

Index

Copyright © 2014 National Fire Protection Association. All Rights Reserved.

The copyright in this index is separate and distinct from the copyright in the document that it indexes. The licensing provisions set forth for the document are not applicable to this index. This index may not be reproduced in whole or in part by any means without the express written permission of NFPA.

-A-

Accessible
Definition ... 3.3.1
Administration ... Chap. 1
Application ... 1.3
Equivalency ... 1.4
Purpose ... 1.2
Scope ... 1.1, A.1.1
Air Filter
Definition ... 3.3.2
Approved
Definition ... 3.2.1, A.3.2.1
Authority Having Jurisdiction (AHJ)
Definition ... 3.2.2, A.3.2.2

-C-

Central Warm Air Heating System
Definition ... 3.3.3
Forced Air System
Definition ... 3.3.3.1
Gravity System
Definition ... 3.3.3.2, A.3.3.3.2
Combustible Material
Definition ... 3.3.4

-D-

Definitions ... Chap. 3
Duct Covering
Definition ... 3.3.5
Duct Lining
Definition ... 3.3.6

-E-

Equipment, Wiring, and Controls ... Chap. 6
Controls ... 6.3
Accessory Equipment ... 6.3.6
Air for Combustion and Ventilation ... 6.3.3, A.6.3.3
Air-Circulating Fan Controls ... 6.3.5
Fan Control for Stoker-Fired Furnaces ... 6.3.2
Temperature Limit Controls ... 6.3.1
Thermostatically Controlled, Hand-Fired, Solid Fuel–Burning Furnaces ... 6.3.4
Electric Wiring and Equipment ... 6.2
Equipment ... 6.1
Air Filters ... 6.1.3
Air-Cooling Equipment ... 6.1.4
Boilers Used with Cooling Units ... 6.1.6
Downflow Systems ... 6.1.2
Furnaces Used with Cooling Units ... 6.1.5
Heat Pump Systems ... 6.1.7
Heating Panels ... 6.1.1
Connection ... 6.1.1.2
Construction ... 6.1.1.3
Solar Systems ... 6.1.8
Explanatory Material ... Annex A

-F-

Fire Integrity of Building Construction ... Chap. 5
Clearances to Combustible Material ... 5.1
Clearances from Furnaces, Boilers, Heat Exchangers, Heat Pumps, and Cooling Units ... 5.1.4
Clearances from Horizontal Supply Ducts ... 5.1.2
Clearances from Vertical Ducts, Risers, Boots, and Register Boxes ... 5.1.3
General ... 5.1.1
Firestopping ... 5.2

-H-

Heat Pump
Definition ... 3.3.7

-I-

Informational References ... Annex B

-L-

Listed
Definition ... 3.2.3, A.3.2.3

-N-

Noncombustible Material
Definition ... 3.3.8

-P-

Plenum
Definition ... 3.3.9

-R-

Referenced Publications ... Chap. 2
General ... 2.1
NFPA Publications ... 2.2
Other Publications ... 2.3
References for Extracts in Mandatory Sections ... 2.4
Return System
Definition ... 3.3.10
Rooms Large in Comparison with Size of Equipment
Definition ... 3.3.11

-S-

Shall
Definition ... 3.2.4
Should
Definition ... 3.2.5
Supply System
Definition ... 3.3.12
System Components ... Chap. 4
Common Requirements ... 4.3
Air Dispersion Systems ... 4.3.8
Duct Coverings and Linings ... 4.3.1, A.4.3.1
Duct Hangers ... 4.3.3
Joints ... 4.3.2, A.4.3.2
Pipeless Furnace Registers ... 4.3.6
Protection of Vertical Ducts ... 4.3.4
Registers for Ducts and Plenums ... 4.3.5
Use of Concealed Ceiling Spaces as Supply or Return Plenums ... 4.3.7
Return Systems ... 4.2
Continuous Ducts ... 4.2.3

Copyright 2014 National Fire Protection Association (NFPA). Licensed, by agreement, for individual use and download on October 4, 2014 to LEADER and READER for designated user PATTARAPORN SRITRAKOOL. No other reproduction or transmission in any form permitted without written permission of NFPA. For inquires or to report unauthorized use, contact licensing@nfpa.org.

Duct Materials 4.2.1
Duct Openings 4.2.2
Negative Pressure from Circulating Fan 4.2.5
Public Corridors 4.2.4
Supply Systems 4.1, A.4.1
Air Connectors 4.1.2
Duct Materials 4.1.1
Supply Ducts 4.1.1.1, A.4.1.1.1
Furnace Plenums 4.1.3
Use of Underfloor Space as a Supply Plenum 4.1.4

Copyright 2014 National Fire Protection Association (NFPA). Licensed, by agreement, for individual use and download on October 4, 2014 to LEADER and READER for designated user PATTARAPORN SRITRAKOOL. No other reproduction or transmission in any form permitted without written permission of NFPA. For inquires or to report unauthorized use, contact licensing@nfpa.org.

Sequence of Events for the Standards Development Process

As soon as the current edition is published, a Standard is open for Public Input

Step 1: Input Stage

- Input accepted from the public or other committees for consideration to develop the First Draft
- Committee holds First Draft Meeting to revise Standard (23 weeks)
  Committee(s) with Correlating Committee (10 weeks)
- Committee ballots on First Draft (12 weeks)
  Committee(s) with Correlating Committee (11 weeks)
- Correlating Committee First Draft Meeting (9 weeks)
- Correlating Committee ballots on First Draft (5 weeks)
- First Draft Report posted

Step 2: Comment Stage

- Public Comments accepted on First Draft (10 weeks)
- If Standard does not receive Public Comments and the Committee does not wish to further revise the Standard, the Standard becomes a Consent Standard and is sent directly to the Standards Council for issuance
- Committee holds Second Draft Meeting (21 weeks)
  Committee(s) with Correlating Committee (7 weeks)
- Committee ballots on Second Draft (11 weeks)
  Committee(s) with Correlating Committee (10 weeks)
- Correlating Committee First Draft Meeting (9 weeks)
- Correlating Committee ballots on First Draft (8 weeks)
- Second Draft Report posted

Step 3: Association Technical Meeting

- Notice of Intent to Make a Motion (NITMAM) accepted (5 weeks)
- NITMAMs are reviewed and valid motions are certified for presentation at the Association Technical Meeting
- Consent Standard bypasses Association Technical Meeting and proceeds directly to the Standards Council for issuance
- NFPA membership meets each June at the Association Technical Meeting and acts on Standards with "Certified Amending Motions" (certified NITMAMs)
- Committee(s) and Panel(s) vote on any successful amendments to the Technical Committee Reports made by the NFPA membership at the Association Technical Meeting

Step 4: Council Appeals and Issuance of Standard

- Notification of intent to file an appeal to the Standards Council on Association action must be filed within 20 days of the Association Technical Meeting
- Standards Council decides, based on all evidence, whether or not to issue the Standards or to take other action

Committee Membership Classifications[1,2,3,4]

The following classifications apply to Committee members and represent their principal interest in the activity of the Committee.

1. M *Manufacturer:* A representative of a maker or marketer of a product, assembly, or system, or portion thereof, that is affected by the standard.
2. U *User:* A representative of an entity that is subject to the provisions of the standard or that voluntarily uses the standard.
3. IM *Installer/Maintainer:* A representative of an entity that is in the business of installing or maintaining a product, assembly, or system affected by the standard.
4. L *Labor:* A labor representative or employee concerned with safety in the workplace.
5. RT *Applied Research/Testing Laboratory:* A representative of an independent testing laboratory or independent applied research organization that promulgates and/or enforces standards.
6. E *Enforcing Authority:* A representative of an agency or an organization that promulgates and/or enforces standards.
7. I *Insurance:* A representative of an insurance company, broker, agent, bureau, or inspection agency.
8. C *Consumer:* A person who is or represents the ultimate purchaser of a product, system, or service affected by the standard, but who is not included in (2).
9. SE *Special Expert:* A person not representing (1) through (8) and who has special expertise in the scope of the standard or portion thereof.

NOTE 1: "Standard" connotes code, standard, recommended practice, or guide.

NOTE 2: A representative includes an employee.

NOTE 3: While these classifications will be used by the Standards Council to achieve a balance for Technical Committees, the Standards Council may determine that new classifications of member or unique interests need representation in order to foster the best possible Committee deliberations on any project. In this connection, the Standards Council may make such appointments as it deems appropriate in the public interest, such as the classification of "Utilities" in the National Electrical Code Committee.

NOTE 4: Representatives of subsidiaries of any group are generally considered to have the same classification as the parent organization.

Copyright 2014 National Fire Protection Association (NFPA). Licensed, by agreement, for individual use and download on October 4, 2014 to LEADER and READER for designated user PATTARAPORN SRITRAKOOL. No other reproduction or transmission in any form permitted without written permission of NFPA. For inquires or to report unauthorized use, contact licensing@nfpa.org.

Submitting Public Input / Public Comment through the Electronic Submission System (e-Submission):

As soon as the current edition is published, a Standard is open for Public Input.

Before accessing the e-Submission System, you must first sign-in at www.NFPA.org. *Note: You will be asked to sign-in or create a free online account with NFPA before using this system*:

a. Click in the gray Sign In box on the upper left side of the page. Once signed-in, you will see a red "Welcome" message in the top right corner.
b. Under the Codes and Standards heading, Click on the Document Information pages (List of Codes & Standards), and then select your document from the list or use one of the search features in the upper right gray box.

OR

a. Go directly to your specific document page by typing the convenient short link of www.nfpa.org/document#, (Example: NFPA 921 would be www.nfpa.org/921) Click in the gray Sign In box on the upper left side of the page. Once signed in, you will see a red "Welcome" message in the top right corner.

To begin your Public Input, select the link The next edition of this standard is now open for Public Input (formally "proposals") located on the Document Information tab, the Next Edition tab, or the right-hand Navigation bar. Alternatively, the Next Edition tab includes a link to Submit Public Input online

At this point, the NFPA Standards Development Site will open showing details for the document you have selected. This "Document Home" page site includes an explanatory introduction, information on the current document phase and closing date, a left-hand navigation panel that includes useful links, a document Table of Contents, and icons at the top you can click for Help when using the site. The Help icons and navigation panel will be visible except when you are actually in the process of creating a Public Input.

Once the First Draft Report becomes available there is a Public comment period during which anyone may submit a Public Comment on the First Draft. Any objections or further related changes to the content of the First Draft must be submitted at the Comment stage.

To submit a Public Comment you may access the e-Submission System utilizing the same steps as previous explained for the submission of Public Input.

For further information on submitting public input and public comments, go to: http://www.nfpa.org/publicinput

Other Resources available on the Doc Info Pages

Document information tab: Research current and previous edition information on a Standard

Next edition tab: Follow the committee's progress in the processing of a Standard in its next revision cycle.

Technical committee tab: View current committee member rosters or apply to a committee

Technical questions tab: For members and Public Sector Officials/AHJs to submit questions about codes and standards to NFPA staff. Our Technical Questions Service provides a convenient way to receive timely and consistent technical assistance when you need to know more about NFPA codes and standards relevant to your work. Responses are provided by NFPA staff on an informal basis.

Products/training tab: List of NFPA's publications and training available for purchase.

Community tab: Information and discussions about a Standard

Copyright 2014 National Fire Protection Association (NFPA). Licensed, by agreement, for individual use and download on October 4, 2014 to LEADER and READER for designated user PATTARAPORN SRITRAKOOL. No other reproduction or transmission in any form permitted without written permission of NFPA. For inquires or to report unauthorized use, contact licensing@nfpa.org.

Information on the NFPA Standards Development Process

I. Applicable Regulations. The primary rules governing the processing of NFPA standards (codes, standards, recommended practices, and guides) are the NFPA *Regulations Governing the Development of NFPA Standards (Regs)*. Other applicable rules include NFPA *Bylaws*, NFPA *Technical Meeting Convention Rules*, NFPA *Guide for the Conduct of Participants in the NFPA Standards Development Process*, and the NFPA *Regulations Governing Petitions to the Board of Directors from Decisions of the Standards Council*. Most of these rules and regulations are contained in the *NFPA Standards Directory*. For copies of the *Directory*, contact Codes and Standards Administration at NFPA Headquarters; all these documents are also available on the NFPA website at "www.nfpa.org."

The following is general information on the NFPA process. All participants, however, should refer to the actual rules and regulations for a full understanding of this process and for the criteria that govern participation.

II. Technical Committee Report. The Technical Committee Report is defined as "the Report of the responsible Committee(s), in accordance with the Regulations, in preparation of a new or revised NFPA Standard." The Technical Committee Report is in two parts and consists of the First Draft Report and the Second Draft Report. (See *Regs* at 1.4)

III. Step 1: First Draft Report. The First Draft Report is defined as "Part one of the Technical Committee Report, which documents the Input Stage." The First Draft Report consists of the First Draft, Public Input, Committee Input, Committee and Correlating Committee Statements, Correlating Input, Correlating Notes, and Ballot Statements. (See *Regs* at 4.2.5.2 and Section 4.3) Any objection to an action in the First Draft Report must be raised through the filing of an appropriate Comment for consideration in the Second Draft Report or the objection will be considered resolved. [See *Regs* at 4.3.1(b)]

IV. Step 2: Second Draft Report. The Second Draft Report is defined as "Part two of the Technical Committee Report, which documents the Comment Stage." The Second Draft Report consists of the Second Draft, Public Comments with corresponding Committee Actions and Committee Statements, Correlating Notes and their respective Committee Statements, Committee Comments, Correlating Revisions, and Ballot Statements. (See *Regs* at Section 4.2.5.2 and 4.4) The First Draft Report and the Second Draft Report together constitute the Technical Committee Report. Any outstanding objection following the Second Draft Report must be raised through an appropriate Amending Motion at the Association Technical Meeting or the objection will be considered resolved. [See *Regs* at 4.4.1(b)]

V. Step 3a: Action at Association Technical Meeting. Following the publication of the Second Draft Report, there is a period during which those wishing to make proper Amending Motions on the Technical Committee Reports must signal their intention by submitting a Notice of Intent to Make a Motion. (See *Regs* at 4.5.2) Standards that receive notice of proper Amending Motions (Certified Amending Motions) will be presented for action at the annual June Association Technical Meeting. At the meeting, the NFPA membership can consider and act on these Certified Amending Motions as well as Follow-up Amending Motions, that is, motions that become necessary as a result of a previous successful Amending Motion. (See 4.5.3.2 through 4.5.3.6 and Table1, Columns 1-3 of *Regs* for a summary of the available Amending Motions and who may make them.) Any outstanding objection following action at an Association Technical Meeting (and any further Technical Committee consideration following successful Amending Motions, see *Regs* at 4.5.3.7 through 4.6.5.3) must be raised through an appeal to the Standards Council or it will be considered to be resolved.

VI. Step 3b: Documents Forwarded Directly to the Council. Where no Notice of Intent to Make a Motion (NITMAM) is received and certified in accordance with the Technical Meeting Convention Rules, the standard is forwarded directly to the Standards Council for action on issuance. Objections are deemed to be resolved for these documents. (See *Regs* at 4.5.2.5)

VII. Step 4a: Council Appeals. Anyone can appeal to the Standards Council concerning procedural or substantive matters related to the development, content, or issuance of any document of the Association or on matters within the purview of the authority of the Council, as established by the *Bylaws* and as determined by the Board of Directors. Such appeals must be in written form and filed with the Secretary of the Standards Council (See *Regs* at 1.6). Time constraints for filing an appeal must be in accordance with 1.6.2 of the *Regs*. Objections are deemed to be resolved if not pursued at this level.

VIII. Step 4b: Document Issuance. The Standards Council is the issuer of all documents (see Article 8 of *Bylaws*). The Council acts on the issuance of a document presented for action at an Association Technical Meeting within 75 days from the date of the recommendation from the Association Technical Meeting, unless this period is extended by the Council (See *Regs at* 4.7.2). For documents forwarded directly to the Standards Council, the Council acts on the issuance of the document at its next scheduled meeting, or at such other meeting as the Council may determine (See *Regs* at 4.5.2.5 and 4.7.4).

IX. Petitions to the Board of Directors. The Standards Council has been delegated the responsibility for the administration of the codes and standards development process and the issuance of documents. However, where extraordinary circumstances requiring the intervention of the Board of Directors exist, the Board of Directors may take any action necessary to fulfill its obligations to preserve the integrity of the codes and standards development process and to protect the interests of the Association. The rules for petitioning the Board of Directors can be found in the *Regulations Governing Petitions to the Board of Directors from Decisions of the Standards Council* and in 1.7 of the *Regs*.

X. For More Information. The program for the Association Technical Meeting (as well as the NFPA website as information becomes available) should be consulted for the date on which each report scheduled for consideration at the meeting will be presented. For copies of the First Draft Report and Second Draft Report as well as more information on NFPA rules and for up-to-date information on schedules and deadlines for processing NFPA documents, check the NFPA website (www.nfpa.org/aboutthecodes) or contact NFPA Codes & Standards Administration at (617) 984-7246.

Copyright 2014 National Fire Protection Association (NFPA). Licensed, by agreement, for individual use and download on October 4, 2014 to LEADER and READER for designated user PATTARAPORN SRITRAKOOL. No other reproduction or transmission in any form permitted without written permission of NFPA. For inquires or to report unauthorized use, contact licensing@nfpa.org.

Stay Up-To-Date. Join NFPA® Today!

☑ **YES** Please enroll me as a member of NFPA for the term checked below. Activate all benefits, and ship my *Member Kit* including the *Benefits Guide* and other resources to help me make the most of my NFPA membership.

Please allow three to four weeks for the kit to arrive.

Billing Information:

Name _____ Title _____

Organization _____

Address _____

City _____ State _____ Zip/Postal Code _____

Country _____

Phone _____ E-mail _____

Priority Code: 8J-MIS-1Z

Please Answer The Following Questions:

Job Title *(check one)*

- ❑ Architect, Engineer, Consultant, Contractor (C17)
- ❑ Facilities Safety Officer (F14)
- ❑ Fire Chief, Other Fire Service (A11)
- ❑ Loss Control, Risk Manager (L11)
- ❑ Inspector, Building Official, Fire Marshal (F03)
- ❑ Owner, President, Manager, Administrator (C10)
- ❑ Other (please specify): (G11)_____

Type of Organization *(check one)*

- ❑ Architecture, Engineering, Contracting (A14)
- ❑ Commercial Firm (Office, Retail, Lodging, Restaurant) (G13)
- ❑ Electrical Services, Installation (J11)
- ❑ Fire Service, Public and Private (AA1)
- ❑ Government (C12)
- ❑ Industrial Firm (Factory, Warehouse) (C11)
- ❑ Institutional (Health Care, Education, Detention, Museums) (B11)
- ❑ Insurance, Risk Management (B12)
- ❑ Utilities (G12)
- ❑ Other (please specify): (G11)_____

4 Easy Ways to Join

Fax: 1-800-593-6372, Outside the U.S. +1-508-895-8301
Mail: NFPA Membership Services Center,
11 Tracy Drive, Avon, MA 02322-9908
Online: nfpa.org
Call: 1-800-344-3555
Outside the U.S. call +1-617-770-3000

05/13-D

Terms and Payment:

- ❑ 1 year ($165)
- ❑ 2 years ($300) SAVE $30
- ❑ 3 years ($430) SAVE $65

Annual membership dues include a $45 subscription to *NFPA Journal*®. Regular membership in NFPA is individual and non-transferable. NFPA Journal is a registered trademark of the National Fire Protection Association, Quincy, MA 02169. Voting privileges begin after 180 days of individual membership. Prices subject to change.

Payment Method:

Check One:

- ❑ Payment Enclosed *(Make check payable to NFPA.)*
- ❑ Purchase Order *(Please attach this form to your P.O.)*
- ❑ Bill Me Later *(Not available on International memberships.)*

Charge My: ❑ VISA ❑ MasterCard ❑ AmEx ❑ Discover

Card #_____

Expiration Date _____

Name on Card _____

Signature _____

International members: Please note prepayment is required on all International orders. Be sure to enclose a check or select your preferred credit card option.

100% Money-Back Guarantee

If anytime during your first year you decide membership is not for you, let us know and you'll receive a 100% refund of your dues.

Copyright 2014 National Fire Protection Association (NFPA). Licensed, by agreement, for individual use and download on October 4, 2014 to LEADER and READER for designated user PATTARAPORN SRITRAKOOL. No other reproduction or transmission in any form permitted without written permission of NFPA. For inquires or to report unauthorized use, contact licensing@nfpa.org.

"Member-Only" Benefits
Keeps You Up-To-Date!

FREE! Technical Support — Technical Support by Phone/Email. Get fast, reliable answers to all code-related questions—from electrical safety for employee workplaces to carbon dioxide extinguishing systems—from NFPA's team of fire protection specialists.

NFPA Journal® — THE journal of record for fire protection, this bi-monthly publication will keep you abreast of the latest fire prevention and safety practices, as well as new technologies and strategies for protecting life and property from fire.

NFPA Update — This easy-to-read monthly e-newsletter will keep you up-to-date on important association programs such as the annual meeting; bring you times of interest from NFPA's regional offices; and alert you to nationwide events and opportunities you won't want to miss.

NFPA News — From new standards for dry cleaning plants to warning equipment for household carbon monoxide, this monthly online update keeps you abreast of additions of changes that could impact how you do you work.

NFPA Standards Directory — The NFPA Standards Directory is your complete guide to NFPA's code-making process. Simply access your online NFPA member profile for document revision guidelines, the revision cycle schedule, and forms for submitting Proposals and Comments. Your online NFPA member profile and access to the NFPA Standards Directory is automatically generated once you join NFPA.

FREE! Section Membership — Share YOUR expertise with others in any of 16 industry-specific sections covering your own field of interest.

Member Kit — Includes Membership Certificate, Pin, Decals, ID Card, and Camera-ready Logo Art. Display the NFPA member logo proudly on your business correspondence, literature, website, and vehicles.

10% Discounts — Save hundreds of dollars each year on the many products and services listed in the NFPA Catalog, including codes and standards publications, handbooks, training videos, and other education materials to increase your knowledge and skills.

Voting Rights — Your chance to help shape the future direction of fire prevention codes and standards. Voting rights go into effect 180 days from the start of individual membership.

Conference Invitation— Invitation to the NFPA Conference and Expo. Attend this important meeting at discounted rates as a member of NFPA.

Join NFPA today!
www.nfpa.org

NFPA® and *NFPA Journal*® are registered trademarks of the National Fire Protection Association, Quincy, MA 02169-7471