Copyright 2014 National Fire Protection Association (NFPA). Licensed, by agreement, for individual use and download on October 4, 2014 to LEADER and READER for designated user PATTARAPORN SRITRAKOOL. No other reproduction or transmission in any form permitted without written permission of NFPA. For inquires or to report unauthorized use, contact licensing@nfpa.org.

NFPA® 86

Standard for Ovens and Furnaces

2015 Edition



NFPA, 1 Batterymarch Park, Quincy, MA 02169-7471
An International Codes and Standards Organization

Copyright 2014 National Fire Protection Association (NFPA). Licensed, by agreement, for individual use and download on October 4, 2014 to LEADER and READER for designated user PATTARAPORN SRITRAKOOL. No other reproduction or transmission in any form permitted without written permission of NFPA. For inquires or to report unauthorized use, contact licensing@nfpa.org.

IMPORTANT NOTICES AND DISCLAIMERS CONCERNING NFPA® STANDARDS

NOTICE AND DISCLAIMER OF LIABILITY CONCERNING THE USE OF NFPA STANDARDS

NFPA® codes, standards, recommended practices, and guides ("NFPA Standards"), of which the document contained herein is one, are developed through a consensus standards development process approved by the American National Standards Institute. This process brings together volunteers representing varied viewpoints and interests to achieve consensus on fire and other safety issues. While the NFPA administers the process and establishes rules to promote fairness in the development of consensus, it does not independently test, evaluate, or verify the accuracy of any information or the soundness of any judgments contained in NFPA Standards.

The NFPA disclaims liability for any personal injury, property or other damages of any nature whatsoever, whether special, indirect, consequential or compensatory, directly or indirectly resulting from the publication, use of, or reliance on NFPA Standards. The NFPA also makes no guaranty or warranty as to the accuracy or completeness of any information published herein.

In issuing and making NFPA Standards available, the NFPA is not undertaking to render professional or other services for or on behalf of any person or entity. Nor is the NFPA undertaking to perform any duty owed by any person or entity to someone else. Anyone using this document should rely on his or her own independent judgment or, as appropriate, seek the advice of a competent professional in determining the exercise of reasonable care in any given circumstances.

The NFPA has no power, nor does it undertake, to police or enforce compliance with the contents of NFPA Standards. Nor does the NFPA list, certify, test, or inspect products, designs, or installations for compliance with this document. Any certification or other statement of compliance with the requirements of this document shall not be attributable to the NFPA and is solely the responsibility of the certifier or maker of the statement.

REMINDER: UPDATING OF NFPA STANDARDS

Users of NFPA codes, standards, recommended practices, and guides ("NFPA Standards") should be aware that NFPA Standards may be amended from time to time through the issuance of Tentative Interim Amendments or corrected by Errata. An official NFPA Standard at any point in time consists of the current edition of the document together with any Tentative Interim Amendment and any Errata then in effect.

In order to determine whether an NFPA Standard has been amended through the issuance of Tentative Interim Amendments or corrected by Errata, visit the Document Information Pages on NFPA's website. The Document Information Pages provide up-to-date, document specific information including any issued Tentative Interim Amendments and Errata.

To access the Document Information Page for a specific NFPA Standard, go to http://www.nfpa.org/docinfo to choose from the list of NFPA Standards or use the search feature on the right to select the NFPA Standard number (e.g., NFPA 101). In addition to posting all existing Tentative Interim Amendments and Errata, the Document Information Page also includes the option to sign-up for an "Alert" feature to receive an email notification when new updates and other information are posted regarding the document.

ISBN: 978-145590895-0 (Print)
ISBN: 978-145590928-5 (PDF)

Copyright 2014 National Fire Protection Association (NFPA). Licensed, by agreement, for individual use and download on October 4, 2014 to LEADER and READER for designated user PATTARAPORN SRITRAKOOL. No other reproduction or transmission in any form permitted without written permission of NFPA. For inquires or to report unauthorized use, contact licensing@nfpa.org.

IMPORTANT NOTICES AND DISCLAIMERS CONCERNING NFPA® STANDARDS

ADDITIONAL NOTICES AND DISCLAIMERS

Updating of NFPA Standards

Users of NFPA codes, standards, recommended practices, and guides ("NFPA Standards") should be aware that these documents may be superseded at any time by the issuance of new editions or may be amended from time to time through the issuance of Tentative Interim Amendments or corrected by Errata. An official NFPA Standard at any point in time consists of the current edition of the document together with any Tentative Interim Amendments and any Errata then in effect. In order to determine whether a given document is the current edition and whether it has been amended through the issuance of Tentative Interim Amendments or corrected through the issuance of Errata, consult appropriate NFPA publications such as the National Fire Codes® Subscription Service, visit the NFPA website at www.nfpa.org, or contact the NFPA at the address listed below.

Interpretations of NFPA Standards

A statement, written or oral, that is not processed in accordance with Section 6 of the Regulations Governing the Development of NFPA Standards shall not be considered the official position of NFPA or any of its Committees and shall not be considered to be, nor be relied upon as, a Formal Interpretation.

Patents

The NFPA does not take any position with respect to the validity of any patent rights referenced in, related to, or asserted in connection with an NFPA Standard. The users of NFPA Standards bear the sole responsibility for determining the validity of any such patent rights, as well as the risk of infringement of such rights, and the NFPA disclaims liability for the infringement of any patent resulting from the use of or reliance on NFPA Standards.

NFPA adheres to the policy of the American National Standards Institute (ANSI) regarding the inclusion of patents in American National Standards ("the ANSI Patent Policy"), and hereby gives the following notice pursuant to that policy:

> **NOTICE:** The user's attention is called to the possibility that compliance with an NFPA Standard may require use of an invention covered by patent rights. NFPA takes no position as to the validity of any such patent rights or as to whether such patent rights constitute or include essential patent claims under the ANSI Patent Policy. If, in connection with the ANSI Patent Policy, a patent holder has filed a statement of willingness to grant licenses under these rights on reasonable and nondiscriminatory terms and conditions to applicants desiring to obtain such a license, copies of such filed statements can be obtained, on request, from NFPA. For further information, contact the NFPA at the address listed below.

Law and Regulations

Users of NFPA Standards should consult applicable federal, state, and local laws and regulations. NFPA does not, by the publication of its codes, standards, recommended practices, and guides, intend to urge action that is not in compliance with applicable laws, and these documents may not be construed as doing so.

Copyrights

NFPA Standards are copyrighted. They are made available for a wide variety of both public and private uses. These include both use, by reference, in laws and regulations, and use in private self-regulation, standardization, and the promotion of safe practices and methods. By making these documents available for use and adoption by public authorities and private users, the NFPA does not waive any rights in copyright to these documents.

Use of NFPA Standards for regulatory purposes should be accomplished through adoption by reference. The term "adoption by reference" means the citing of title, edition, and publishing information only. Any deletions, additions, and changes desired by the adopting authority should be noted separately in the adopting instrument. In order to assist NFPA in following the uses made of its documents, adopting authorities are requested to notify the NFPA (Attention: Secretary, Standards Council) in writing of such use. For technical assistance and questions concerning adoption of NFPA Standards, contact NFPA at the address below.

For Further Information

All questions or other communications relating to NFPA Standards and all requests for information on NFPA procedures governing its codes and standards development process, including information on the procedures for requesting Formal Interpretations, for proposing Tentative Interim Amendments, and for proposing revisions to NFPA standards during regular revision cycles, should be sent to NFPA headquarters, addressed to the attention of the Secretary, Standards Council, NFPA, 1 Batterymarch Park, P.O. Box 9101, Quincy, MA 02269-9101; email: stds_admin@nfpa.org

For more information about NFPA, visit the NFPA website at www.nfpa.org. All NFPA codes and standards can be viewed at no cost at www.nfpa.org/freeaccess.

Copyright 2014 National Fire Protection Association (NFPA). Licensed, by agreement, for individual use and download on October 4, 2014 to LEADER and READER for designated user PATTARAPORN SRITRAKOOL. No other reproduction or transmission in any form permitted without written permission of NFPA. For inquires or to report unauthorized use, contact licensing@nfpa.org.

Copyright © 2014 National Fire Protection Association®. All Rights Reserved.

NFPA® 86

Standard for

Ovens and Furnaces

2015 Edition

This edition of NFPA 86, *Standard for Ovens and Furnaces*, was prepared by the Technical Committee on Ovens and Furnaces. It was issued by the Standards Council on April 29, 2014, with an effective date of May 19, 2014, and supersedes all previous editions.

This edition of NFPA 86 was approved as an American National Standard on May 19, 2014.

Origin and Development of NFPA 86

The history of the NFPA standards for ovens and furnaces goes back to NBFU 34, *Regulations of the Board of Fire Underwriters for Finishing Processes (other than paint spraying) Dip Tanks, Hardening and Tempering Tanks, Flow Coat Work, Japanning and Enameling Including Ovens as Recommended by the National Fire Protection Association*, which was issued in 1926. Subsequently, the ovens part of NBFU 34 was separated and issued as NBFU 86, *Regulations of the National Board of Fire Underwriters for Ovens For Japan, Enamel, and Other Flammable Finishes as Recommended by the National Fire Protection Association*, in 1931. In 1948, NBFU 86 became NFPA 86-T, *Tentative Standards for Class A Oven Design, Location and Equipment*. The document was issued as a standard in 1950 and titled NFPA 86, *Standards for Class A Ovens and Furnace Design, Location and Equipment*.

The 1985 edition of NFPA 86 was the first edition of the standard in its current form. It was created from the combination of the former NFPA 86A, *Standard for Ovens and Furnaces — Design, Location and Equipment*, and NFPA 86B, *Standard for Industrial Furnaces — Design, Location and Equipment*.

The committee introduced changes in the definitions of Class A and Class B ovens, which were published in the 1982 edition of NFPA 86B and added as a tentative interim amendment in 1983 to the 1977 edition of NFPA 86A. The changes in the definitions eliminated the principal differences between the two standards, except for the ventilation requirements contained in NFPA 86A. By providing a separate chapter for ventilation requirements in the 1985 edition (Chapter 5), the Committee found it was no longer necessary or desirable to maintain two separate documents that addressed the same subjects.

The changes that were incorporated into the 1985 edition included the following:

(1) A new chapter dealing with low-oxygen atmosphere ovens was added.
(2) The definitions of subjects contained in the text were updated and new definitions provided.
(3) The text was refined in an effort to make the document more understandable.
(4) The material was rearranged to comply with the NFPA *Manual of Style*.

The 1995 edition of NFPA 86 correlated with NFPA 86C, *Standard for Industrial Furnaces Using a Special Processing Atmosphere*, and NFPA 86D, *Standard for Industrial Furnaces Using Vacuum as an Atmosphere*. It also refined and updated the standard to more current technologies, provided increased requirements in several areas, and expanded the explanatory material in the appendixes.

The 1999 edition of NFPA 86 included changes to the technical requirements in several areas and many refinements that clarified the technical requirements. Changes were also provided to more clearly distinguish mandatory requirements from nonmandatory recommendations and explanatory material. Nonmandatory notes were relocated to the appendixes.

NFPA and National Fire Protection Association are registered trademarks of the National Fire Protection Association, Quincy, Massachusetts 02169.

Copyright 2014 National Fire Protection Association (NFPA). Licensed, by agreement, for individual use and download on October 4, 2014 to LEADER and READER for designated user PATTARAPORN SRITRAKOOL. No other reproduction or transmission in any form permitted without written permission of NFPA. For inquires or to report unauthorized use, contact licensing@nfpa.org.

The 2003 edition of NFPA 86 was a complete revision that incorporated NFPA 86C, *Standard for Industrial Furnaces Using a Special Processing Atmosphere*, and NFPA 86D, *Standard for Industrial Furnaces Using Vacuum as an Atmosphere*. This new, combined document provided one standard for ovens and furnaces of all types. Also, in accordance with the *Manual of Style for NFPA Technical Committee Documents*, referenced publications were listed in Chapter 2 and all definitions moved to Chapter 3.

The 2007 edition of NFPA 86 continued to bring the standard into compliance with the *Manual of Style for NFPA Technical Committee Documents* and to update requirements. Requirements for logic systems and programmable logic controller–based systems replaced the requirement that programmable logic controllers be specifically listed for combustion safety service, since listed controllers were no longer available. Unenforceable text was (1) revised to be enforceable, (2) deleted, or (3) relocated to Annex A. Where appropriate, repetitive text was replaced by tables. The former Chapter 14, Inspection, Testing and Maintenance, was renumbered and renamed as Chapter 7, Commissioning, Operations, Maintenance, Inspection, and Testing. Requirements for operations and maintenance throughout the standard were then relocated to that chapter.

In the 2011 edition, the scope of NFPA 86 was clarified to exclude fluid heaters, and reference was made to the new NFPA 87, *Recommended Practice for Fluid Heaters*. All requirements for fire protection were relocated to Chapter 9. Chapter 13, which covers Class C furnaces, was revised to clarify the requirements for the introduction and removal of special atmospheres. The requirements for repeated pre-ignition purge were revised to recognize the unique characteristics of ovens utilizing pulse firing of burners. In addition, the requirements for safety shutoff valves that must close when a burner experiences a loss of flame signal were clarified.

The 2015 edition of NFPA 86 includes several changes to Chapter 3 due to the addition of definitions for *burner management system*, *flame failure response time*, *flame detector*, *hardwired*, *combustion safeguard*, and pressure regulator types. The Committee also deleted requirements from Chapter 12 applicable to arc melting furnaces (or electric arc furnaces) as the provisions have not been maintained and the Committee no longer has the relevant expertise. The Committee added procedures for placing equipment into service based on purging practices in NFPA 54 and NFPA 56. The Committee modified the standard to clarify the types of acceptable devices used for combustion safety service. The Committee added a requirement prohibiting manifolding vent lines from different pressure levels. As a result of introducing definitions for *burner management system* and *combustion safeguard*, the Committee modified requirements in Chapter 8 for logic systems for both BMS logic and programmable logic controller (PLC) systems. The Committee modified requirements for Class A and Class C ovens and furnaces, including the development of new requirements on fire protection and safety ventilation for Class A ovens.

Copyright 2014 National Fire Protection Association (NFPA). Licensed, by agreement, for individual use and download on October 4, 2014 to LEADER and READER for designated user PATTARAPORN SRITRAKOOL. No other reproduction or transmission in any form permitted without written permission of NFPA. For inquires or to report unauthorized use, contact licensing@nfpa.org.

Technical Committee on Ovens and Furnaces

Richard A. Gallagher, *Chair*
Zurich Services Corporation, DE [I]

Richard J. Martin, *Secretary*
Martin Thermal Engineering, CA [SE]

Gary S. Andress, Liberty Mutual Property, MA [I]
Kevin J. Carlisle, Karl Dungs, Inc., MN [M]
Rep. Industrial Heating Equipment Association
Erik W. Christiansen, Exponent, Inc., CA [SE]
Randall Conklen, Caterpillar Incorporated, IL [U]
Dan Curry, Eclipse, Inc., IL [M]
Robert Daley, Solar Atmospheres Manufacturing, Inc., PA [M]
John Dauer, SCC, Inc., IL [M]
Thomas B. George, Tokio Marine Management, Inc., CA [I]
John E. Higginbotham, Alcoa, Inc., TN [U]
E. Richard Huggins, Technical Standards & Safety Authority (TSSA), ON Canada [E]
Ted Jablkowski, Fives North American Combustion, Inc., CT [M]
Kai-Eric Jensen, Jensen Industries, Inc., MI [M]
Frank J. Kaczmarczyk, Carpenter Technology Corporation, PA [U]
Joseph A. (Jak) Kozma III, AFC-Holcroft LLC, MI [M]
Joel Liggins, Toyota Motor Engineering & Manufacturing NA, TN [U]
Scott D. Musser, RPA Engineering, PA [SE]
Raymond Ostrowski, Consultant-Industrial Safety, AZ [SE]
Douglas M. Perry, Maxon/Honeywell Company, IN [M]
Michael C. Polagye, FM Global, MA [I]
Geoffrey A. Raifsnider, Global Finishing Solutions, WI [M]
Raymond E. Serafini, Jr., Linde, LLC, PA [IM]
Jason Sroczynski, Jayco Enterprises Inc., OH [SE]
Mark V. Stender, Surface Combustion, Inc., OH [M]
Franklin R. Switzer, Jr., S-afe, Inc., NY [SE]
Grant F. Tiefenbruck, 3M Company, MN [U]
Jay D. Tindall, Paragon Risk Engineering, PA [I]
Algirdas Underys, A. Finkl & Sons Co., IL [U]
Rep. Forging Industry Association
Peter J. Willse, XL Global Asset Protection Services, CT [I]

Alternates

Bryan R. Baesel, Eclipse/CEC Combustion Safety, Inc., OH [M]
(Alt. to D. Curry)
Amy Brown, FM Global, MA [I]
(Alt. to M. C. Polagye)
Elliott Davis, Selas Heat Techology Company LLC, OH [M]
(Alt. to K. J. Carlisle)
James J. Garmaker, 3M Company, MN [U]
(Alt. to G. F. Tiefenbruck)
Keith A. Hancock, Surface Combustion, Inc., OH [M]
(Alt. to M. V. Stender)
Brent D. Hill, Liberty Mutual Property, TX [I]
(Alt. to G. S. Andress)
Scott Johnston, Caterpillar Incorporated, IL [U]
(Alt. to R. Conklen)
William M. Keough, AFC-Holcroft LLC, MI [M]
(Alt. to J. A. Kozma III)
Bruce L. Mickelson, Honeywell International, Inc., MN [M]
(Alt. to D. M. Perry)
Delmar R. "Trey" Morrison III, Exponent, Inc., IL [SE]
(Alt. to E. W. Christiansen)
Glen R. Mortensen, Zurich Services Corporation, IL [I]
(Alt. to R. A. Gallagher)
Peter S. Pinto, SCC, Inc., IL [M]
(Alt. to J. Dauer)
Lee M. Rebodos, Paragon Risk Engineering, TX [I]
(Alt. to J. D. Tindall)
William M. Rucki, Fives North American Combustion, Inc., OH [M]
(Alt. to T. Jablkowski)
J. William Sheppard, Sheppard & Associates, LLC, MI [SE]
(Alt. to R. Ostrowski)
Robert J. Wilson, Solar Manufacturing Inc., PA [M]
(Alt. to R. Daley)

Guy R. Colonna, NFPA Staff Liaison

This list represents the membership at the time the Committee was balloted on the final text of this edition. Since that time, changes in the membership may have occurred. A key to classifications is found at the back of the document.

NOTE: Membership on a committee shall not in and of itself constitute an endorsement of the Association or any document developed by the committee on which the member serves.

Committee Scope: This Committee shall have primary responsibility for documents on safeguarding against fire and explosion hazards associated with industrial ovens, furnaces, and related equipment that are used in the processing of combustible or non-combustible materials in the presence of air, vacuum, or other special atmospheres and are heated by electricity, fossil fuels, or other heating sources.

Copyright 2014 National Fire Protection Association (NFPA). Licensed, by agreement, for individual use and download on October 4, 2014 to LEADER and READER for designated user PATTARAPORN SRITRAKOOL. No other reproduction or transmission in any form permitted without written permission of NFPA. For inquires or to report unauthorized use, contact licensing@nfpa.org.

Contents

Chapter 1 Administration **86–** 6
1.1 Scope **86–** 6
1.2 Purpose **86–** 6
1.3 Application **86–** 6
1.4 Retroactivity **86–** 6
1.5 Equivalency **86–** 7
1.6 Units and Formulas **86–** 7

Chapter 2 Referenced Publications **86–** 7
2.1 General **86–** 7
2.2 NFPA Publications **86–** 7
2.3 Other Publications **86–** 7
2.4 References for Extracts in Mandatory Sections **86–** 7

Chapter 3 Definitions **86–** 8
3.1 General **86–** 8
3.2 NFPA Official Definitions **86–** 8
3.3 General Definitions **86–** 8

Chapter 4 General **86–** 14
4.1 Approvals, Plans, and Specifications **86–** 14
4.2 Safety Labeling **86–** 14
4.3 Pressure Vessels **86–** 14

Chapter 5 Location and Construction **86–** 14
5.1 Location **86–** 14
5.2 Furnace Design **86–** 15
5.3 Explosion Relief **86–** 15
5.4 Ventilation and Exhaust System **86–** 16
5.5 Mountings and Auxiliary Equipment **86–** 16

Chapter 6 Furnace Heating Systems **86–** 17
6.1 General **86–** 17
6.2 Fuel Gas–Fired Units **86–** 17
6.3 Oil-Fired Units **86–** 19
6.4 Oxygen-Enhanced Fuel-Fired Units **86–** 21
6.5 Flue Product Venting **86–** 21
6.6 Electrically Heated Units **86–** 21
6.7 Fluid Heating Systems **86–** 22

Chapter 7 Commissioning, Operations, Maintenance, Inspection, and Testing **86–** 22
7.1 Commissioning **86–** 22
7.2 Training **86–** 23
7.3 Operations **86–** 23
7.4 Inspection, Testing, and Maintenance **86–** 23
7.5 Record Retention **86–** 24
7.6 Procedures **86–** 24

Chapter 8 Safety Equipment and Application **86–** 24
8.1 General **86–** 24
8.2 Safety Device Requirements **86–** 24
8.3 Burner Management System Logic **86–** 24
8.4 Programmable Logic Controller Systems **86–** 24
8.5 Safety Control Application for Fuel-Fired Heating Systems **86–** 25
8.6 Ventilation Safety Devices **86–** 26
8.7 Combustion Air Safety Devices **86–** 26
8.8 Safety Shutoff Valves (Fuel Gas or Oil) **86–** 26
8.9 Fuel Pressure Switches (Gas or Oil) **86–** 27
8.10 Flame Supervision **86–** 27
8.11 Fuel Oil Atomization (Other Than Mechanical Atomization) **86–** 28
8.12 Fuel Oil Temperature Limit Devices **86–** 28
8.13 Multiple-Fuel Systems **86–** 28
8.14 Air–Fuel Gas Mixing Machines **86–** 28
8.15 Oxygen Safety Devices **86–** 28
8.16 Excess Temperature Limit Interlock **86–** 29
8.17 1400°F (760°C) Bypass Interlock **86–** 29
8.18 Electrical Heating Systems **86–** 29
8.19 Fluid-Heated Systems — Excess Temperature Limit Interlock **86–** 30

Chapter 9 Fire Protection **86–** 30
9.1 General **86–** 30
9.2 Types of Fire Protection Systems **86–** 30
9.3 Special Considerations **86–** 30
9.4 Drawings and Calculations **86–** 30
9.5 Means of Access **86–** 30
9.6 Inspection, Testing, and Maintenance of Fire Protection Equipment **86–** 30

Chapter 10 Thermal Oxidizer **86–** 31
10.1 General **86–** 31
10.2 Location and Construction **86–** 31
10.3 Heating Systems. (Reserved) **86–** 31
10.4 Commissioning, Operations, Maintenance, Inspection, and Testing. (Reserved) **86–** 31
10.5 Fire Protection. (Reserved) **86–** 31
10.6 Safety Equipment and Application **86–** 31

Chapter 11 Class A Ovens and Furnaces **86–** 32
11.1 General. (Reserved) **86–** 32
11.2 Location and Construction. (Reserved) **86–** 32
11.3 Heating Systems. (Reserved) **86–** 32
11.4 Commissioning, Operations, Maintenance, Inspection, and Testing **86–** 32
11.5 Fire Protection **86–** 32
11.6 Safety Ventilation for Class A Ovens **86–** 32
11.7 Low-Oxygen Atmosphere Class A Ovens with Solvent Recovery **86–** 37

Copyright 2014 National Fire Protection Association (NFPA). Licensed, by agreement, for individual use and download on October 4, 2014 to LEADER and READER for designated user PATTARAPORN SRITRAKOOL. No other reproduction or transmission in any form permitted without written permission of NFPA. For inquires or to report unauthorized use, contact licensing@nfpa.org.

Chapter 12 Class B Ovens and Furnaces **86–** 39
12.1 General. (Reserved) **86–** 39
12.2 Location and Construction. (Reserved) ... **86–** 39
12.3 Heating Systems. (Reserved) **86–** 39
12.4 Commissioning, Operations, Maintenance, Inspection, and Testing. (Reserved) **86–** 39
12.5 Safety Equipment **86–** 39
12.6 Fire Protection. (Reserved) **86–** 39

Chapter 13 Special Atmospheres for Class C Ovens and Furnaces **86–** 39
13.1 General. (Reserved) **86–** 39
13.2 Location and Construction. (Reserved) ... **86–** 39
13.3 Heating Systems. (Reserved) **86–** 39
13.4 Commissioning, Operations, Maintenance, Inspection, and Testing. (Reserved) **86–** 39
13.5 Safety Equipment **86–** 39
13.6 Fire Protection. (Reserved) **86–** 54

Chapter 14 Class D Furnaces **86–** 54
14.1 General. (Reserved) **86–** 54
14.2 Location and Construction **86–** 54
14.3 Heating Systems. (Reserved) **86–** 55
14.4 Commissioning, Operations, Maintenance, Inspection, and Testing. (Reserved) **86–** 56
14.5 Safety Equipment **86–** 56

Annex A Explanatory Material **86–** 59

Annex B Example of Class A Furnace Operational and Maintenance Checklist **86–**119

Annex C Example of Class A or Class B Furnace Operational and Maintenance Checklist **86–**120

Annex D The Lower Limit of Flammability and the Autogenous Ignition Temperature of Certain Common Solvent Vapors Encountered in Ovens **86–**120

Annex E Continuous Solvent Vapor Concentration Indicator and Controller **86–**121

Annex F Steam Extinguishing Systems **86–**122

Annex G Example of Class C Furnace Operational and Maintenance Checklist **86–**123

Annex H Vacuum Furnace Maintenance Checklist **86–**124

Annex I Pump Data **86–**126

Annex J Engineering Data **86–**127

Annex K Vacuum Symbols **86–**131

Annex L Design Standard References **86–**134

Annex M Informational References **86–**134

Index **86–**136

Copyright 2014 National Fire Protection Association (NFPA). Licensed, by agreement, for individual use and download on October 4, 2014 to LEADER and READER for designated user PATTARAPORN SRITRAKOOL. No other reproduction or transmission in any form permitted without written permission of NFPA. For inquires or to report unauthorized use, contact licensing@nfpa.org.

NFPA 86

Standard for

Ovens and Furnaces

2015 Edition

IMPORTANT NOTE: This NFPA document is made available for use subject to important notices and legal disclaimers. These notices and disclaimers appear in all publications containing this document and may be found under the heading "Important Notices and Disclaimers Concerning NFPA Documents." They can also be obtained on request from NFPA or viewed at www.nfpa.org/disclaimers.

NOTICE: An asterisk (*) following the number or letter designating a paragraph indicates that explanatory material on the paragraph can be found in Annex A.

A reference in brackets [ ] following a section or paragraph indicates material that has been extracted from another NFPA document. As an aid to the user, the complete title and edition of the source documents for extracts in mandatory sections of the document are given in Chapter 2 and those for extracts in informational sections are given in Annex M. Extracted text may be edited for consistency and style and may include the revision of internal paragraph references and other references as appropriate. Requests for interpretations or revisions of extracted text shall be sent to the technical committee responsible for the source document.

Information on referenced publications can be found in Chapter 2 and Annex M.

Chapter 1 Administration

1.1* Scope. This standard shall apply to Class A, Class B, Class C, and Class D ovens, dryers, and furnaces; thermal oxidizers; and any other heated enclosure used for processing of materials and related equipment.

1.1.1 The terms *ovens*, *dryers*, and *furnaces* are used interchangeably and shall also apply to other heated enclosures used for processing of materials.

1.1.2* Within the scope of this standard, a Class A, Class B, or Class C oven is any heated enclosure operating at approximately atmospheric pressure and used for commercial and industrial processing of materials.

1.1.3 A Class A oven shall be permitted to utilize a low-oxygen atmosphere.

1.1.4 This standard shall apply to bakery ovens and Class A ovens, in all respects, and where reference is made to ANSI Z50.1, *Bakery Equipment — Safety Requirements,* those requirements shall apply to bakery oven construction and safety.

1.1.5 This standard shall apply to atmosphere generators and atmosphere supply systems serving Class C furnaces and to furnaces with integral quench tanks or molten salt baths.

1.1.6* This standard shall apply to Class D ovens and furnaces operating above ambient temperatures to over 5000°F (2760°C) and at pressures normally below atmospheric to 10^{-8} torr (1.33×10^{-6} Pa).

1.1.7 This standard shall not apply to the following:

(1)*Coal or other solid fuel–firing systems
(2) Listed equipment with a heating system(s) that supplies a total input not exceeding 150,000 Btu/hr (44 kW)
(3) Fired heaters in petroleum refineries and petrochemical facilities that are designed and installed in accordance with API STD 560, *Fired Heaters for General Refinery Services*, 2007; API RP 556, *Instrumentation and Control Systems for Fired Heaters and Steam Generators*, 1997; and API RP 2001, *Fire Protection in Refineries*, 2005.
(4) Fluid heaters as defined in NFPA 87, *Recommended Practice for Fluid Heaters*
(5) Electric arc furnaces and submerged arc furnaces

1.2 Purpose. This standard provides the requirements for furnaces to minimize the fire and explosion hazards that can endanger the furnace, the building, or personnel.

1.3 Application.

1.3.1* This entire standard shall apply to new installations and to alterations or extensions to existing equipment.

1.3.2 The requirements of Chapters 1 through 10 shall apply to equipment described in subsequent chapters except as modified by those chapters.

1.3.3 Chapter 7 shall apply to all operating furnaces.

1.3.4 Section 6.2 shall apply to the following:

(1) Furnace heating systems fired with fuel gases, including the following:
  (a) Natural gas
  (b) Mixed gas
  (c) Manufactured gas
  (d) Liquefied petroleum gas (LP-Gas) in the vapor phase
  (e) LP-Gas/air systems
(2) Gas-burning portions of dual-fuel or combination burners

1.3.5 Section 6.3 shall apply to the following:

(1) Combustion systems for furnaces fired with No. 2, No. 4, No. 5, and No. 6 industrial fuel oils as specified by ASTM D 396, *Standard Specifications for Fuel Oils*
(2) Oil-burning portions of dual-fuel and combination burners

1.3.6 Section 6.4 shall apply to combustion systems using oxygen (oxy-fuel) or oxygen-enriched air with gas or liquid fuels.

1.3.7 Section 6.6 shall apply to all types of heating systems where electrical energy is used as the source of heat.

1.3.8 Section 6.7 shall apply to the following:

(1) All types of systems where water, steam, or other heat-transfer fluids are the source of heat through the use of heat exchangers
(2) Heat-transfer fluid system between the oven supply and the return isolation valves for the oven being served

1.4 Retroactivity. The provisions of this standard reflect a consensus of what is necessary to provide an acceptable degree of protection from the hazards addressed in this standard at the time the standard was issued.

1.4.1 Unless otherwise specified, the provisions of this standard shall not apply to facilities, equipment, structures, or installations that existed or were approved for construction or installation prior to the effective date of the standard. Where specified, the provisions of this standard shall be retroactive.

Copyright 2014 National Fire Protection Association (NFPA). Licensed, by agreement, for individual use and download on October 4, 2014 to LEADER and READER for designated user PATTARAPORN SRITRAKOOL. No other reproduction or transmission in any form permitted without written permission of NFPA. For inquires or to report unauthorized use, contact licensing@nfpa.org.

1.4.2 In those cases where the authority having jurisdiction determines that the existing situation presents an unacceptable degree of risk, the authority having jurisdiction shall be permitted to apply retroactively any portions of this standard deemed appropriate.

1.4.3 The retroactive requirements of this standard shall be permitted to be modified if their application clearly would be impractical in the judgment of the authority having jurisdiction and only where it is clearly evident that a reasonable degree of safety is provided.

1.5* Equivalency. Nothing in this standard is intended to prevent the use of systems, methods, or devices of equivalent or superior quality, strength, fire resistance, effectiveness, durability, and safety over those prescribed by this standard.

1.5.1 Technical documentation shall be submitted to the authority having jurisdiction to demonstrate equivalency.

1.5.2 The system, method, or device shall be approved for the intended purpose by the authority having jurisdiction.

1.6 Units and Formulas.

1.6.1 SI Units. Metric units of measurement in this standard are in accordance with the modernized metric system known as the International System of Units (SI).

1.6.2 Primary and Equivalent Values. If a value for a measurement as given in this standard is followed by an equivalent value in other units, the first stated value shall be regarded as the requirement. A given equivalent value might be approximate.

1.6.3 Conversion Procedure. SI units have been converted by multiplying the quantity by the conversion factor and then rounding the result to the appropriate number of significant digits.

Chapter 2 Referenced Publications

2.1 General. The documents or portions thereof listed in this chapter are referenced within this standard and shall be considered part of the requirements of this document.

2.2 NFPA Publications. National Fire Protection Association, 1 Batterymarch Park, Quincy, MA 02169-7471.

NFPA 10, *Standard for Portable Fire Extinguishers,* 2013 edition.

NFPA 11, *Standard for Low-, Medium-, and High-Expansion Foam,* 2010 edition.

NFPA 12, *Standard on Carbon Dioxide Extinguishing Systems,* 2011 edition.

NFPA 13, *Standard for the Installation of Sprinkler Systems,* 2013 edition.

NFPA 15, *Standard for Water Spray Fixed Systems for Fire Protection,* 2012 edition.

NFPA 17, *Standard for Dry Chemical Extinguishing Systems,* 2013 edition.

NFPA 17A, *Standard for Wet Chemical Extinguishing Systems,* 2013 edition.

NFPA 25, *Standard for the Inspection, Testing, and Maintenance of Water-Based Fire Protection Systems,* 2014 edition.

NFPA 30, *Flammable and Combustible Liquids Code,* 2015 edition.

NFPA 31, *Standard for the Installation of Oil-Burning Equipment,* 2011 edition.

NFPA 54, *National Fuel Gas Code,* 2015 edition.

NFPA 55, *Compressed Gases and Cryogenic Fluids Code,* 2013 edition.

NFPA 58, *Liquefied Petroleum Gas Code,* 2014 edition.

NFPA 68, *Standard on Explosion Protection by Deflagration Venting,* 2013 edition.

NFPA 70®, National Electrical Code®, 2014 edition.

NFPA 79, *Electrical Standard for Industrial Machinery,* 2015 edition.

NFPA 87, *Recommended Practice for Fluid Heaters,* 2015 edition.

NFPA 91, *Standard for Exhaust Systems for Air Conveying of Vapors, Gases, Mists, and Noncombustible Particulate Solids,* 2010 edition.

NFPA 750, *Standard on Water Mist Fire Protection Systems,* 2015 edition.

2.3 Other Publications.

2.3.1 ANSI Publications. American National Standards Institute, Inc., 25 West 43rd Street, 4th Floor, New York, NY 10036.

ANSI Z50.1, *Bakery Equipment — Safety Requirements,* 2006.

2.3.2 API Publications. American Petroleum Institute, 1220 L Street, NW, Washington, DC 20005-4070.

API STD 560, *Fired Heaters for General Refinery Services*, 2007.

API RP 556, *Instrumentation and Control Systems for Fired Heaters and Steam Generators*, 1997.

API RP 2001, *Fire Protection in Refineries*, 2005.

2.3.3 ASME Publications. American Society of Mechanical Engineers, Three Park Avenue, New York, NY 10016-5990.

Boiler and Pressure Vessel Code, 2007.

ASME B31.1, *Power Piping,* 2007.

ASME B31.3, *Process Piping,* 2008.

2.3.4 ASTM Publications. ASTM International, 100 Barr Harbor Drive, P.O. Box C700, West Conshohocken, PA 19428-2959.

ASTM D 396, *Standard Specifications for Fuel Oils,* 2009.

2.3.5 CGA Publications. Compressed Gas Association, 4221 Walney Road, 5th Floor, Chantilly, VA 20151-2923.

CGA G-4.1, *Cleaning Equipment for Oxygen Service*, 2004.

2.3.6 IEC Publications. International Electrical Commission, 3, rue de Varembé, P.O. Box 131, CH - 1211, Geneva 20, Switzerland.

IEC 61508, *Functional Safety of Electrical/Electronic/Programmable Electronic Safety-Related Systems*, 2010.

2.3.7 Other Publications.

Merriam-Webster's Collegiate Dictionary, 11th edition, Merriam-Webster, Inc., Springfield, MA, 2003.

2.4 References for Extracts in Mandatory Sections.

NFPA 54, *National Fuel Gas Code,* 2015 edition.

NFPA 69, *Standard on Explosion Prevention Systems,* 2014 edition.

NFPA 70®, National Electrical Code®, 2014 edition.

NFPA 85, *Boiler and Combustion Systems Hazards Code,* 2011 edition.

NFPA 99, *Health Care Facilities Code,* 2015 edition.

Copyright 2014 National Fire Protection Association (NFPA). Licensed, by agreement, for individual use and download on October 4, 2014 to LEADER and READER for designated user PATTARAPORN SRITRAKOOL. No other reproduction or transmission in any form permitted without written permission of NFPA. For inquires or to report unauthorized use, contact licensing@nfpa.org.

NFPA 211, *Standard for Chimneys, Fireplaces, Vents, and Solid Fuel–Burning Appliances,* 2013 edition.

NFPA 302, *Fire Protection Standard for Pleasure and Commercial Motor Craft,* 2015 edition.

NFPA 820, *Standard for Fire Protection in Wastewater Treatment and Collection Facilities,* 2012 edition.

Chapter 3 Definitions

3.1 General. The definitions contained in this chapter shall apply to the terms used in this standard. Where terms are not defined in this chapter or within another chapter, they shall be defined using their ordinarily accepted meanings within the context in which they are used. *Merriam-Webster's Collegiate Dictionary*, 11th edition, shall be the source for the ordinarily accepted meaning.

3.2 NFPA Official Definitions.

3.2.1* Approved. Acceptable to the authority having jurisdiction.

3.2.2* Authority Having Jurisdiction (AHJ). An organization, office, or individual responsible for enforcing the requirements of a code or standard, or for approving equipment, materials, an installation, or a procedure.

3.2.3 Labeled. Equipment or materials to which has been attached a label, symbol, or other identifying mark of an organization that is acceptable to the authority having jurisdiction and concerned with product evaluation, that maintains periodic inspection of production of labeled equipment or materials, and by whose labeling the manufacturer indicates compliance with appropriate standards or performance in a specified manner.

3.2.4* Listed. Equipment, materials, or services included in a list published by an organization that is acceptable to the authority having jurisdiction and concerned with evaluation of products or services, that maintains periodic inspection of production of listed equipment or materials or periodic evaluation of services, and whose listing states that either the equipment, material, or service meets appropriate designated standards or has been tested and found suitable for a specified purpose.

3.2.5 Shall. Indicates a mandatory requirement.

3.2.6 Should. Indicates a recommendation or that which is advised but not required.

3.2.7 Standard. A document, the main text of which contains only mandatory provisions using the word "shall" to indicate requirements and which is in a form generally suitable for mandatory reference by another standard or code or for adoption into law. Nonmandatory provisions are not to be considered a part of the requirements of a standard and shall be located in an appendix, annex, footnote, informational note, or other means as permitted in the *Manual of Style for NFPA Technical Committee Documents*.

3.3 General Definitions.

3.3.1 Afterburner. See 3.3.49.2.1.

3.3.2 Air.

3.3.2.1 *Burnout Air.* Air introduced into a furnace chamber for the purpose of burning out flammable atmospheres, residual soot, or other carbonaceous material.

3.3.2.2 *Combustion Air.* The air necessary to provide for the complete combustion of fuel and usually consisting of primary air, secondary air, and excess air. [**211,** 2013]

3.3.2.3 *Primary Air.* All air supplied through the burner.

3.3.2.4 *Process Control Air.* Air introduced to a furnace containing a special atmosphere to establish a controlled oxygen level or carbon potential.

3.3.2.5 *Reaction Air.* All the air that, when reacted with gas in an endothermic generator by the indirect addition of heat, becomes a special atmosphere gas.

3.3.2.6 *Secondary Air.* All the combustion air that is intentionally allowed to enter the combustion chamber in excess of primary air.

3.3.3 Automatic Fire Check. A flame arrester equipped with a check valve to shut off the fuel gas supply automatically if a backfire occurs.

3.3.4 Backfire Arrester. A flame arrester installed in fully premixed air–fuel gas distribution piping to terminate flame propagation therein, shut off fuel supply, and relieve pressure resulting from a backfire.

3.3.5 Burner. A device or group of devices used for the introduction of fuel, air, oxygen, or oxygen-enriched air into a furnace at the required velocities, turbulence, and concentration to maintain ignition and combustion of fuel.

3.3.5.1 *Atmospheric Burner.* A burner used in a low-pressure fuel gas or atmospheric system that requires secondary air for complete combustion.

3.3.5.2 *Atomizing Burner.* A burner in which oil is divided into a fine spray by an atomizing agent, such as steam or air.

3.3.5.3 *Blast Burner.* A burner delivering a combustible mixture to the combustion zone under a pressure that is normally above 0.3 in. w.c. (75 kPa).

3.3.5.4 *Combination Fuel Gas and Oil Burner.* A burner designed to burn either fuel gas or oil or to burn both simultaneously.

3.3.5.5 *Dual-Fuel Burner.* A burner designed to burn either fuel gas or oil but not to burn both simultaneously.

3.3.5.6 *Line Burner.* A burner whose flame is a continuous line.

3.3.5.7 *Multiple-Port Burner.* A burner having two or more separate discharge openings or ports.

3.3.5.8 *Nozzle Mixing Burner.* A burner in which the fuel and air are introduced separately to the point of ignition.

3.3.5.9 *Premix Burner.* A burner in which the fuel and air are mixed prior to the point of ignition.

3.3.5.10 *Pressure Atomizing Burner.* An atomizing burner in which oil under high pressure is forced through small orifices to emit liquid fuel in a finely divided state.

3.3.5.11 *Radiant Burner.* A burner designed to transfer a significant part of the combustion heat in the form of radiation.

3.3.5.12 *Radiant Tube Burner.* A burner designed to provide a long flame within a tube to ensure substantially uniform radiation from the tube surface.

Copyright 2014 National Fire Protection Association (NFPA). Licensed, by agreement, for individual use and download on October 4, 2014 to LEADER and READER for designated user PATTARAPORN SRITRAKOOL. No other reproduction or transmission in any form permitted without written permission of NFPA. For inquires or to report unauthorized use, contact licensing@nfpa.org.

3.3.5.13 ***Rotary Atomizing Burner.*** An atomizing burner in which oil is atomized by applied centrifugal force, such as by a whirling cone or plate.

3.3.5.14 ***Self-Piloted Burner.*** A burner in which the pilot fuel is issued from the same ports as the main flame or merges with the main flame to form a common flame envelope with a common flame base.

3.3.6* Burner Management System. The field devices, logic system, and final control elements dedicated to combustion safety and operator assistance in the starting and stopping of fuel preparation and burning equipment and for preventing misoperation of and damage to fuel preparation and burning equipment. [**85,** 2011]

3.3.7 Burner System. One or more burners operated as a unit by a common safety shutoff valve(s).

3.3.8 Burner Turndown. The ratio of maximum to minimum burner fuel–input rates.

3.3.9 Burn-In. The procedure used in starting up a special atmosphere furnace to replace air within the heating chamber(s) and vestibule(s) with flammable special atmosphere.

3.3.10 Burn-Out. The procedure used in shutting down or idling a special atmosphere to replace flammable atmosphere within the heating chamber(s) and vestibule(s) with nonflammable atmosphere.

3.3.11 Combustion Safeguard. A safety device or system that responds to the presence or absence of flame properties using one or more flame detectors and provides safe start-up, safe operation, and safe shutdown of a burner under normal and abnormal conditions.

3.3.12 Controller.

3.3.12.1 ***Continuous Vapor Concentration Controller.*** A device that measures, indicates, and directly or indirectly controls the concentration of a flammable vapor–air mixture as expressed in percentage of the lower flammable limit (LFL).

3.3.12.2 ***Continuous Vapor Concentration High-Limit Controller.*** A device designed to initiate reduction of the vapor concentration if the concentration exceeds a predetermined set point.

3.3.12.3 ***Programmable Controller.*** A digital electronic system designed for use in an industrial environment that uses a programmable memory for the internal storage of user-oriented instructions for implementing specific functions to control, through digital or analog inputs and outputs, various types of machines or processes.

3.3.12.4 ***Temperature Controller.*** A device that measures the temperature and automatically controls the input of heat into the furnace.

3.3.13* Cryogenic Fluid. A fluid produced or stored at very low temperatures.

3.3.14* Cut-Away Damper. A restricting airflow device that, when placed in the maximum closed position, allows a minimum amount of airflow past the restriction.

3.3.15 Direct-Fired Air Makeup Unit. A Class B fuel-fired heat utilization unit operating at approximately atmospheric pressure used to heat outside replacement air for the process.

3.3.16* Explosion-Resistant (Radiant Tube). A radiant tube or radiant tube heat recovery system that does not fail catastrophically when subjected to the maximum deflagration pressure caused by the ignition of an accumulation of a stoichiometric mixture of the selected fuel(s) and air.

3.3.17 Flame Arrester. A device that prevents the transmission of a flame through a flammable gas/air mixture by quenching the flame on the surfaces of an array of small passages through which the flame must pass. [**69,** 2014]

3.3.18 Flame Detector. A safety device directly responsive to flame properties that senses the presence or absence of flame using flame sensors.

3.3.19 Flame Failure Response Time (FFRT). The period of time that starts with the loss of flame and ends with the de-energizing of the safety shutoff valve(s).

3.3.20* Flame Propagation Rate. The speed at which a flame progresses through a combustible fuel–air mixture.

3.3.21* Flame Rod. A sensor that employs an electrically insulated rod of temperature-resistant material that extends into the flame being supervised, with a voltage impressed between the rod and a ground connected to the nozzle or burner.

3.3.22* Flammable Limits. The range of concentration of a flammable gas in air within which a flame can be propagated, with the lowest flammable concentration known as the lower flammable limit (LFL) and the highest flammable concentration known as the upper flammable limit (UFL).

3.3.23 Fuel Gas. A gas used as a fuel source, including natural gas, manufactured gas, sludge gas, liquefied petroleum gas–air mixtures, liquefied petroleum gas in the vapor phase, and mixtures of these gases. [**820,** 2012]

3.3.24 Fuel Gas System.

3.3.24.1 ***High Pressure Fuel Gas System.*** A fuel gas system using the kinetic energy of a jet of 1 psig (7 kPa) or higher gas pressure to entrain from the atmosphere all, or nearly all, the air required for combustion.

3.3.24.2 ***Low Pressure or Atmospheric Fuel Gas System.*** A fuel gas system using the kinetic energy of a jet of less than 1 psig (7 kPa) gas pressure to entrain from the atmosphere a portion of the air required for combustion.

3.3.25 Fuel Oil. A liquid fuel used as a fuel source, including Grades 2, 4, 5, or 6 fuel oils as defined in ASTM D 396, *Standard Specifications for Fuel Oils.*

3.3.26 Fume Incinerator. Any separate or independent combustion equipment or device that entrains the process exhaust for the purpose of direct thermal or catalytic destruction, which can include heat recovery.

3.3.27 Furnace.

3.3.27.1 ***Atmosphere Furnace.*** A furnace built to allow heat processing of materials in a special processing atmosphere.

3.3.27.2 ***Batch Furnace.*** A furnace into which the work charge is introduced all at once.

3.3.27.3* ***Class A Furnace.*** An oven or furnace that has heat utilization equipment wherein there is a potential explosion or fire hazard that could be occasioned by the presence of flammable volatiles or combustible materials processed or heated in the furnace.

Copyright 2014 National Fire Protection Association (NFPA). Licensed, by agreement, for individual use and download on October 4, 2014 to LEADER and READER for designated user PATTARAPORN SRITRAKOOL. No other reproduction or transmission in any form permitted without written permission of NFPA. For inquires or to report unauthorized use, contact licensing@nfpa.org.

3.3.27.4* ***Class B Furnace.*** An oven or furnace that has heat utilization equipment wherein there are no flammable volatiles or combustible materials being heated.

3.3.27.5* ***Class C Furnace.*** An oven or furnace that has a potential hazard due to a flammable or other special atmosphere being used for treatment of material in process.

3.3.27.6* ***Class D Furnace.*** An oven or furnace that is a pressure vessel that operates under vacuum for all or part of the process cycle.

3.3.27.7 ***Continuous Furnace.*** A furnace into which the work charge is more or less continuously introduced.

3.3.27.8 ***Molten Salt Bath Furnace.*** A furnace that employs salts heated to a molten state, excluding aqueous alkaline baths, hot brine, or other systems utilizing salts in solution.

3.3.27.9 ***Plasma Arc Furnace.*** A furnace that employs the passage of an electric current between a pair of electrodes or between electrodes and the work and that ionizes a gas (such as argon) and transfers energy in the form of heat.

3.3.28 Gas.

3.3.28.1 ***Ballast Gas.*** Atmospheric air or a dry gas that is admitted into the compression chamber of rotary mechanical pumps to prevent condensation of vapors in the pump oil by maintaining the partial pressure of the condensable vapors below the saturation value.

3.3.28.2 ***Inert Gas.*** See 3.3.67.5, Inert Special Atmosphere (Purge Gas).

3.3.28.3 ***Reaction Gas.*** A gas that, when reacted with air in an endothermic generator by the addition of heat, becomes a special atmosphere gas.

3.3.29 Gas Analyzer. A device that measures concentrations, directly or indirectly, of some or all components in a gas or mixture.

3.3.30* Gas Quenching. The introduction of a gas into a furnace for the purpose of cooling the work.

3.3.30.1 ***High Pressure Gas Quenching.*** Gas-cooling at pressures greater than 15 psig.

3.3.31 Guarded. Covered, shielded, fenced, enclosed, or otherwise protected by means of suitable covers, casings, barriers, rails, screens, mats, or platforms to remove the likelihood of approach or contact by persons or objects to a point of danger. [**70:**100]

3.3.32* Hardwired. The method of interconnecting signals or interlocks to a logic system or between logic systems using a dedicated interconnection for each individual signal.

3.3.33 Heating System.

3.3.33.1* ***Dielectric Heating System.*** A heating system similar to an induction heater, but using frequencies that generally are higher (3 MHz or more) than those used in induction heating.

3.3.33.2 ***Direct-Fired External Heating System.*** A heating system in which the burners are in a combustion chamber effectively separated from the work chamber and arranged so that products of combustion from the burners are discharged into the work chamber by a circulating fan or blower.

3.3.33.3* ***Direct-Fired Heating System.*** A heating system in which the products of combustion enter the work chamber.

3.3.33.4 ***Direct-Fired Internal Heating System.*** A heating system in which the burners are located within the work chamber.

3.3.33.5 ***Indirect-Fired Heating System.*** A heating system in which the products of combustion do not enter the work chamber.

3.3.33.6* ***Indirect-Fired Internal Heating System.*** A heating system of gastight radiators containing burners not in contact with the oven atmosphere.

3.3.33.7* ***Induction Heating System.*** A heating system by means of which a current-carrying conductor induces the transfer of electrical energy to the work by eddy currents.

3.3.33.8 ***Radiant Tube Heating System.*** A heating system with tubular elements open at one or both ends in which each tube has an inlet burner arrangement where combustion is initiated, a suitable length where combustion occurs, and an outlet that discharges outside the work chamber for the combustion products formed.

3.3.33.9* ***Resistance Heating System.*** A heating system in which heat is produced by current flow through a resistive conductor.

3.3.33.10 ***Tubular Heating System.*** A radiant heating system in which resistive conductors are enclosed in glass, quartz, or ceramic envelopes that can contain a special gas atmosphere.

3.3.34 Ignition Temperature. The lowest temperature at which a gas–air mixture can ignite and continue to burn; also referred to as *auto-ignition temperature*.

3.3.35* Implosion. The rapid inward collapsing of the walls of a vacuum component or device as the result of failure of the walls to sustain the atmospheric pressure.

3.3.36 Interlock.

3.3.36.1 ***1400°F (760°C) Bypass Interlock.*** A device designed to permit specific permitted logic when the combustion chamber is proved to be above 1400°F (760°C).

3.3.36.2 ***Excess Temperature Limit Interlock.*** A device designed to cut off the source of heat if the operating temperature exceeds a predetermined temperature set point.

3.3.36.3 ***Proved Low-Fire Start Interlock.*** A burner start interlock in which a control sequence ensures that a high–low or modulated burner is at a reduced firing rate for reliable ignition before the burner can be ignited.

3.3.36.4 ***Safety Interlock.*** A device required to ensure safe startup and safe operation and to cause safe equipment shutdown.

3.3.37* Limiting Oxidant Concentration (LOC). The concentration of oxidant below which a deflagration cannot occur.

3.3.38 LOC. See 3.3.37, Limiting Oxidant Concentration (LOC).

3.3.39 Lower Flammable Limit (LFL). See 3.3.22, Flammable Limits.

Copyright 2014 National Fire Protection Association (NFPA). Licensed, by agreement, for individual use and download on October 4, 2014 to LEADER and READER for designated user PATTARAPORN SRITRAKOOL. No other reproduction or transmission in any form permitted without written permission of NFPA. For inquires or to report unauthorized use, contact licensing@nfpa.org.

3.3.40 Mixer.

3.3.40.1 ***Air–Fuel Gas Mixer.*** A mixer that combines air and fuel gas in the proper proportions for combustion.

3.3.40.2* ***Air Jet Mixer.*** A mixer using the kinetic energy of a stream of air issuing from an orifice to entrain the fuel gas required for combustion.

3.3.40.3 ***Gas Jet Mixer [Atmospheric Inspirator (Venturi) Mixer].*** A mixer using the kinetic energy of a jet of fuel gas issuing from an orifice to entrain all or part of the air required for combustion.

3.3.40.4 ***Proportional Mixer.*** A mixer comprising an inspirator that, when supplied with air, draws all the fuel gas necessary for combustion into the airstream, and a governor, zero regulator, or ratio valve that reduces incoming fuel gas pressure to approximately atmospheric.

3.3.41 Mixing Blower. A motor-driven blower to supply air–fuel gas mixtures for combustion through one or more fuel burners or nozzles on a single-zone industrial heating appliance or on each control zone of a multizone installation. Mixing machines operated at 10 in. w.c. (2.49 kPa) or less static pressure are considered mixing blowers.

3.3.42 Mixing Machine. An externally powered mechanical device that mixes fuel and air and compresses the resultant mixture to a pressure suitable for delivery to its point of use.

3.3.43 Molten Bath Salt. See 3.3.27.8, Molten Salt Bath Furnace.

3.3.44 Muffle. An enclosure within a furnace to separate the source of heat from the work and from any special atmosphere that might be required for the process.

3.3.45 Oil Separator. An oil reservoir with baffles used to minimize the discharge of oil mist from the exhaust of a rotary mechanical vacuum pump.

3.3.46 Operator. An individual trained and responsible for the startup, operation, shutdown, and emergency handling of the furnace and associated equipment.

3.3.47 Outgassing. The release of adsorbed or occluded gases or water vapor, usually by heating, such as from a vacuum tube or other vacuum system.

3.3.48 Oven. See 3.3.27.1 through 3.3.27.9, Furnace definitions.

3.3.48.1* ***Low-Oxygen Oven.*** An oven that utilizes a low-oxygen atmosphere to evaporate solvent to facilitate solvent recovery.

3.3.49 Oxidizer.

3.3.49.1 ***Catalytic Oxidizer.*** See 3.3.49.2, Thermal Oxidizer.

3.3.49.1.1 ***Direct Catalytic Oxidizer.*** A combustion system in which the burner(s) directly heats volatile organic compounds (VOCs) or hydrocarbons (HCs) to the destruction temperature, prior to their introduction to a destruction catalyst, without heat recovery to the incoming gases, and in which the catalytic destruction temperature is lower than the noncatalytic (direct thermal) destruction temperature.

3.3.49.1.2 ***Recuperative Catalytic Oxidizer.*** A combustion system in which the burner(s) directly heats VOCs or HCs to the catalytic destruction temperature prior to their introduction to a destruction catalyst, after which products of combustion are used to indirectly heat the incoming gas stream before it contacts the burner flame, and in which the catalytic destruction temperature is lower than the noncatalytic (direct thermal) destruction temperature.

3.3.49.1.3 ***Regenerative Catalytic Oxidizer (RCO).*** A combustion system in which the burner(s) directly heats VOCs or HCs after the gas stream is preheated to the destruction temperature by the periodic flow reversal of the gas stream through beds of ceramic heat recovery media with a coating or layer of catalyst that alternately have been heated by the product gases during an exhaust cycle and then have given up their heat to the incoming reactant gases during an inlet cycle.

3.3.49.2 ***Thermal Oxidizer.*** An independently controlled, enclosed combustion system whose purpose is to destroy VOC, HC gases or vapors, or both, using elevated temperature, residence time, mixing, excess oxygen, and, in some cases, catalysts.

3.3.49.2.1 ***Afterburner (Direct Thermal Oxidizer).*** A direct thermal oxidizer, installed in series and downstream of process equipment, that generates VOC or HC; also referred to as *secondary combustion chamber.*

3.3.49.2.2 ***Direct Thermal Oxidizer.*** A combustion system in which the burner(s) directly heats VOCs or HCs to the destruction temperature without heat recovery to the incoming gases.

3.3.49.2.3 ***Flameless Thermal Oxidizer.*** A direct recuperative or regenerative combustion system in which the burner(s) preheats the heat storage media prior to the introduction of VOCs or HCs and in which, subsequently, the destruction is carried out in the interstices of the heat storage media in a flameless, self-sustaining manner.

3.3.49.2.4 ***Recuperative Thermal Oxidizer.*** A combustion device in which the burner(s) directly heats VOCs or HCs to the destruction temperature and in which the hot products of combustion are used to indirectly heat the incoming gas stream before it contacts the burner flame.

3.3.49.2.5 ***Regenerative Thermal Oxidizer.*** A combustion device in which the burner(s) directly heats VOCs or HCs after the gas stream is preheated to the destruction temperature by the periodic flow reversal of the gas stream through heat storage media that alternately have been heated by the product gases during an exhaust cycle and then have given up their heat to the incoming reactant gases during an inlet cycle.

3.3.50 Partial Pressure. The pressure, in absolute units, exerted by a particular gas in a gas mixture. [**99,** 2015]

3.3.51 Pilot. A flame that is used to light the main burner.

3.3.51.1 ***Burn-off Pilot.*** A pilot that ignites special processing atmosphere discharging from the furnace or generator.

3.3.51.2 ***Continuous Pilot.*** A pilot that burns throughout the entire period that the heating equipment is in service, regardless of whether the main burner is firing.

3.3.51.3 ***Flame Curtain Pilot.*** A pilot that ignites a flame curtain.

3.3.51.4 ***Intermittent Pilot.*** A pilot that burns during light-off and while the main burner is firing.

Copyright 2014 National Fire Protection Association (NFPA). Licensed, by agreement, for individual use and download on October 4, 2014 to LEADER and READER for designated user PATTARAPORN SRITRAKOOL. No other reproduction or transmission in any form permitted without written permission of NFPA. For inquires or to report unauthorized use, contact licensing@nfpa.org.

3.3.51.5 ***Interrupted Pilot.*** A pilot that is ignited and burns during light-off and is automatically shut off at the end of the trial-for-ignition period of the main burner(s).

3.3.51.6 ***Proved Pilot.*** A pilot whose flame is supervised by a flame detector that senses the presence of the pilot flame.

3.3.52 Pipe Burner. A burner consisting of a tube or pipe with ports or tips spaced over its length.

3.3.53 Plasma Arc. A heating process in which an ionized gas, such as nitrogen or argon, is used to conduct electrical current.

3.3.54 Pressure Regulator. A device placed in a gas line for reducing, controlling, and maintaining the pressure in that portion of the piping system downstream of the device.

3.3.54.1 ***Line Pressure Regulator.*** A pressure regulator placed in a gas line between the service regulator and the appliance (equipment) regulator.

3.3.54.2 ***Monitoring Pressure Regulator.*** A pressure regulator in a nonregulated state and set in series with another pressure regulator for the purpose of automatically taking over, in an emergency, control of the pressure downstream of the regulator in cases where pressure exceeds a set maximum.

3.3.54.3 ***Series Pressure Regulator.*** A pressure regulator in series with one service or line pressure regulator.

3.3.54.4 ***Service Pressure Regulator.*** A pressure regulator installed by the serving gas supplier to reduce and limit the service line gas pressure to delivery pressure.

3.3.55 Pressure Relief Valve. A valve that automatically opens and closes a relief vent, depending on whether the pressure is above or below a predetermined value. [**54,** 2015]

3.3.56 Pump.

3.3.56.1 ***Diffusion Pump.*** A vacuum pump in which a stream of heavy molecules, such as those of mercury or oil vapor, carries gas molecules out of the volume being evacuated.

3.3.56.2 ***Gas Ballast Pump.*** A mechanical pump (usually of the rotary type) that uses oil to seal the clearances between the stationary and rotating compression members. The pump is equipped with an inlet valve through which a suitable quantity of atmospheric air or "dry" gas (ballast gas) can be admitted into the compression chamber to prevent condensation of vapors in the pump oil by maintaining the partial pressure of the condensable vapors in the oil below the saturation value (sometimes called a *vented-exhaust mechanical pump*).

3.3.56.3 ***Holding Pump.*** A backing (fore) pump used to hold a diffusion pump at efficient operating conditions while a roughing pump reduces system pressure to a point at which a valve between the diffusion pump and the system can be opened without stopping the flow of vapor from the nozzles.

3.3.56.4 ***Rotary Blower Pump.*** A pump without a discharge valve that moves gas by the propelling action of one or more rapidly rotating members provided with lobes, blades, or vanes; also referred to as *mechanical booster pump* where used in series with a mechanical backing (fore) pump.

3.3.56.5* ***Roughing Pump.*** The pump used to reduce the system pressure to the level at which a diffusion or other vacuum pump can operate.

3.3.56.6 ***Vacuum Pump.*** A compressor for exhausting air and noncondensable gases from a space that is to be maintained at subatmospheric pressure.

3.3.57 Pump-Down Factor. The product of the time to pump down to a given pressure and the displacement (for a service factor of 1) divided by the volume of the system ($F = tD/V$).

3.3.58 Pump Fluid. The operating fluid used in diffusion pumps or in liquid-sealed mechanical pumps (sometimes called *working medium, working fluid*, or *pump oil*).

3.3.59 Purge. The replacement of a flammable, indeterminate, or high-oxygen-bearing atmosphere with another gas that, when complete, results in a nonflammable final state.

3.3.60 Readily Accessible. Capable of being reached quickly and safely for effective use under emergency conditions without the aid of tools. [**302,** 2015]

3.3.61 Roughing Line. A line running from a mechanical pump to a vacuum chamber through which preliminary pumping is conducted to a vacuum range at which a diffusion pump or other high vacuum pump can operate.

3.3.62* Safe-Start Check. A test incorporated in a combustion safeguard that prevents start-up if a flame-detected condition exists due to component failure within the combustion safeguard or flame detector(s) due to the presence of actual or simulated flame.

3.3.63* Safety Device. An instrument, a control, or other equipment that acts, or initiates action, to cause the furnace to revert to a safe condition in the event of equipment failure or other hazardous event.

3.3.64 Safety Relay. A relay listed for safety service.

3.3.65 Safety Shutdown. Stopping operations by means of a safety control or interlock that shuts off all fuel and ignition energy in a manner necessitating manual restart.

3.3.66 Scf. One cubic foot of gas at 70°F (21°C) and 14.7 psia (an absolute pressure of 101 kPa).

3.3.67 Special Atmosphere. A prepared gas or a gas mixture that is introduced into the work chamber of a furnace to replace air, generally to protect or intentionally change the surface of the material undergoing heat processing (heat treatment).

3.3.67.1 ***Carrier Gas Special Atmosphere.*** A gas or liquid component of a special atmosphere that represents a sufficient portion of the special atmosphere gas volume in the furnace so that, if the flow of the gas or liquid component ceases, the total flow of the special atmosphere in the furnace is not sufficient to maintain a positive pressure in the furnace.

3.3.67.2 ***Flammable Special Atmosphere.*** A special atmosphere in which gases are known to be flammable and predictably ignitible where mixed with air.

3.3.67.3 ***Generated Special Atmosphere.*** A special atmosphere created in an ammonia dissociator, exothermic generator, or endothermic generator by dissociation or chemical reaction of reaction air and reaction gas.

3.3.67.4 ***Indeterminate Special Atmosphere.*** A special atmosphere that contains components that, in their pure state, are flammable but that, in the mixtures used (diluted with nonflammable gases), are not reliably and predictably flammable.

Copyright 2014 National Fire Protection Association (NFPA). Licensed, by agreement, for individual use and download on October 4, 2014 to LEADER and READER for designated user PATTARAPORN SRITRAKOOL. No other reproduction or transmission in any form permitted without written permission of NFPA. For inquires or to report unauthorized use, contact licensing@nfpa.org.

3.3.67.5 ***Inert Special Atmosphere (Purge Gas).*** A special atmosphere of nonflammable gases that contains less than 1 percent oxygen.

3.3.67.6 ***Nonflammable Special Atmosphere.*** A special atmosphere of gases that are known to be nonflammable at any temperature.

3.3.67.7 ***Synthetic Special Atmosphere.*** A special atmosphere such as those of anhydrous ammonia, hydrogen, nitrogen, or inert gases obtained from compressed gas cylinders or bulk storage tanks and those derived by chemical dissociation or mixing of hydrocarbon fluids, including mixtures of synthetic and generated atmospheres.

3.3.68 Supervised Flame. A flame whose presence or absence is detected by a flame detector.

3.3.69 Switch.

3.3.69.1 ***Closed Position Indicator Switch.*** A switch that indicates when a valve is within 0.040 in. (1 mm) of its closed position but does not indicate proof of closure.

3.3.69.2 ***Differential Flow Switch.*** A switch that is activated by the flow of a gaseous or liquid fluid. This flow is detected by measuring pressure at two different points to produce a pressure differential across the sensor.

3.3.69.3 ***Flow Switch.*** A switch that is activated by the flow of a fluid in a duct or piping system.

3.3.69.4 ***Limit Switch.*** A switch that actuates when an operating limit has been reached.

3.3.69.5 ***Manual Emergency Switch.*** A discrete electromechanical push button–type self-latching device that is used to initiate a safety shutdown.

3.3.69.6 ***Pressure Switch.***

3.3.69.6.1 ***Atomizing Medium Pressure Switch.*** A pressure-activated switch arranged to effect a safety shutdown or to prevent the oil burner system from being actuated in the event of inadequate atomizing medium pressure.

3.3.69.6.2 ***Combustion Air Pressure Switch.*** A pressure-activated switch arranged to effect a safety shutdown or to prevent the burner system from being actuated when the combustion air pressure is below its design set point.

3.3.69.6.3 ***High Fuel Pressure Switch.*** A pressure-activated switch arranged to effect a safety shutdown of the burner system in the event of abnormally high fuel pressure.

3.3.69.6.4 ***Low Fuel Pressure Switch.*** A pressure-activated switch arranged to effect a safety shutdown of the burner system in the event of abnormally low fuel pressure.

3.3.69.7* ***Proof-of-Closure Switch.*** A switch installed in a safety shutoff valve that activates only after the valve is fully closed.

3.3.69.8 ***Rotational Switch.*** A switch that usually is driven directly by the fan wheel or fan motor shaft and in which a switch contact closes when the speed of the fan shaft or drive motor reaches a certain predetermined rate.

3.3.70 Tank.

3.3.70.1 ***Integral Liquid or Salt Media Quench-Type Tank.*** A quench-type tank connected to the furnace so that the work is under a protective atmosphere from the time it leaves the heating zone until it enters the tank containing a combustible, noncombustible, or salt quench medium.

3.3.70.2 ***Open Liquid or Salt Media Quench-Type Tank.*** A quench-type tank in which work from the furnace is exposed to air before and upon entering the tank containing a combustible, noncombustible, or salt quench medium.

3.3.71 Time.

3.3.71.1 ***Evacuation Time.*** The time required to pump a given system from atmospheric pressure to a specified pressure; also referred to as *pump-down time* or *time of exhaust.*

3.3.71.2 ***Roughing Time.*** The time required to pump a given system from atmospheric pressure to a pressure at which a diffusion pump or other high vacuum pump can operate.

3.3.72 Trial-for-Ignition Period (Flame-Establishing Period). The interval of time during light-off that a combustion safeguard allows the fuel safety shutoff valve to remain open before the flame detector is required to supervise the flame.

3.3.73 Vacuum. A space in which the pressure is far below atmospheric pressure so that the remaining gases do not affect processes being carried out in the space.

3.3.73.1 ***High Vacuum.*** A vacuum with a pressure between 1×10^{-3} torr and 1×10^{-5} torr (millimeters of mercury).

3.3.73.2 ***Low Vacuum.*** A vacuum with a pressure between 760 torr and 1×10^{-3} torr (millimeters of mercury).

3.3.74 Vacuum Gauge. A device that indicates the absolute gas pressure in a vacuum system.

3.3.75 Vacuum Pumping System. A system of pumps, valves and associated piping and wiring, related protective equipment, and measuring and control instrumentation that produce and control the level of vacuum in a vacuum furnace.

3.3.76 Vacuum System. A chamber with walls capable of withstanding atmospheric pressure and an opening through which gas can be removed through a pipe or manifold to a pumping system, and including all pumps, gauges, valves, and other components.

3.3.77 Vacuum-Type Insulation. A highly reflective double-wall structure with high vacuum between the walls; used as insulation in cryogenic systems for the reduction of heat transfer.

3.3.78 Valve.

3.3.78.1 ***Air Inlet Valve.*** A valve used for letting atmospheric air into a vacuum system; also called a *vacuum breaker.*

3.3.78.2* ***Safety Shutoff Valve.*** A normally closed valve installed in the piping that closes automatically to shut off the fuel, atmosphere gas, or oxygen in the event of abnormal conditions or during shutdown.

3.3.78.3 ***Equipment Isolation Valve.*** A manual shutoff valve for shutoff of the fuel to each piece of equipment.

3.3.78.4 ***Emergency Shutoff Valve.*** A manual shutoff valve to allow the fuel to be turned off in an emergency.

3.3.79* Valve Proving System. A system used to check the closure of safety shutoff valves by detecting leakage.

3.3.80 Vent Limiter. A fixed orifice that limits the escape of gas from a vented device into the atmosphere.

Copyright 2014 National Fire Protection Association (NFPA). Licensed, by agreement, for individual use and download on October 4, 2014 to LEADER and READER for designated user PATTARAPORN SRITRAKOOL. No other reproduction or transmission in any form permitted without written permission of NFPA. For inquires or to report unauthorized use, contact licensing@nfpa.org.

3.3.81 Ventilation. A supply of fresh air to, and exhaust from, a furnace that provides a vigorous, distributed flow of air through all sections of the furnace.

3.3.81.1* *Safety Ventilation.* The ventilation necessary to dilute atmosphere within a Class A oven to not exceed the maximum permitted percent of the Lower Flammable Limit (LFL).

3.3.82 Water-Cooling System for Vacuum Furnaces. The apparatus, equipment, and method used to cool vacuum chamber walls, electrical terminals, seals, workload, and the interior of the furnace where applicable.

Chapter 4 General

4.1* Approvals, Plans, and Specifications.

4.1.1 Before new equipment is installed or existing equipment is remodeled, complete plans, sequence of operations, and specifications shall be submitted for approval to the authority having jurisdiction.

4.1.1.1 Plans shall be drawn that show all essential details with regard to location, construction, ventilation, piping, and electrical safety equipment. A list of all combustion, control, and safety equipment giving manufacturer and type number shall be included.

4.1.1.2* Wiring diagrams and sequence of operations for all safety controls shall be provided.

4.1.1.3 Plans shall include the furnace class (e.g., Class A, B, C, or D).

4.1.1.4 If a furnace is modified and/or its process load is changed from the original design, the furnace class shall be evaluated and either confirmed to remain as the original class or reassigned to a new class.

4.1.2 Any deviation from this standard shall require approval from the authority having jurisdiction.

4.1.3 Electrical.

4.1.3.1* All wiring shall be in accordance with *NFPA 70, National Electrical Code*, NFPA 79, *Electrical Standard for Industrial Machinery*, and as described hereafter.

4.1.3.2 Where seal leakage or diaphragm failure in a device can result in flammable gas or flammable liquid flow through a conduit or cable to an electrical ignition source, a conduit seal or a cable type that is sealed shall be installed.

4.1.3.3 Wiring and equipment installed in hazardous (classified) locations shall comply with the applicable requirements of *NFPA 70, National Electrical Code.*

4.1.3.4* The installation of an oven in accordance with the requirements of this standard shall not in and of itself require a change to the classification of the oven location.

4.2 Safety Labeling.

4.2.1 A safety design data form or a nameplate that states the operating conditions for which the furnace system was designed, built, altered, or extended shall be accessible to the operator.

4.2.2 A warning label stating that the equipment shall be operated and maintained according to instructions shall be provided.

4.2.3 The warning label shall be affixed to the furnace or control panel.

4.3 Pressure Vessels. All pressure vessels and heat exchangers shall be designed, fabricated, and tested in accordance with the ASME *Boiler and Pressure Vessel Code,* Section VIII.

Chapter 5 Location and Construction

5.1 Location.

5.1.1 General.

5.1.1.1* Furnaces and related equipment shall be located so as to protect personnel and buildings from fire or explosion hazards.

5.1.1.2 Furnaces shall be located so as to be protected from damage by external heat, vibration, and mechanical hazards.

5.1.1.3 Furnaces shall be located so as to make maximum use of natural ventilation, to minimize restrictions to adequate explosion relief, and to provide sufficient air supply for personnel.

5.1.1.4* Where furnaces are located in basements or enclosed areas, sufficient ventilation shall be supplied so as to provide required combustion air and to prevent the hazardous accumulation of vapors.

5.1.1.5 Furnaces designed for use with special atmospheres or fuel gas with a specific gravity greater than air shall be located at or above grade and shall be located so as to prevent the escape of the special atmosphere or fuel gas from accumulating in basements, pits, or other areas below the furnace.

5.1.2 Structural Members of the Building.

5.1.2.1 Furnaces shall be located and erected so that the building structural members are not affected adversely by the maximum anticipated temperatures *(see 5.1.4.3)* or by the additional loading caused by the furnace.

5.1.2.2 Structural building members shall not pass through or be enclosed within a furnace.

5.1.3 Location in Regard to Stock, Processes, and Personnel.

5.1.3.1 Furnaces shall be located so as to minimize exposure to power equipment, process equipment, and sprinkler risers.

5.1.3.2 Unrelated stock and combustible materials shall be located at a distance from a furnace, a furnace heater, or ductwork so that the combustible materials will not be ignited, with a minimum separation distance of 2.5 ft (0.8 m).

5.1.3.3 Furnaces shall be located so as to minimize exposure of people to possible injury from fire, explosion, asphyxiation, and hazardous materials and shall not obstruct personnel travel to exitways.

5.1.3.4* Furnaces shall be designed or located so as to prevent an ignition source to flammable coating dip tanks, spray booths, and storage and mixing rooms for flammable liquids or to prevent exposure to flammable vapor or combustible dusts.

5.1.3.5 The requirement of 5.1.3.4 shall not apply to integral quench systems.

5.1.3.6 Equipment shall be protected from corrosive external processes and environments, including fumes or materials from adjacent processes or equipment that produces corrosive conditions when introduced into the furnace environment.

Copyright 2014 National Fire Protection Association (NFPA). Licensed, by agreement, for individual use and download on October 4, 2014 to LEADER and READER for designated user PATTARAPORN SRITRAKOOL. No other reproduction or transmission in any form permitted without written permission of NFPA. For inquires or to report unauthorized use, contact licensing@nfpa.org.

5.1.4 Floors and Clearances.

5.1.4.1 Space shall be provided above and on all sides for the following:

(1) Inspection, maintenance, and operation purposes
(2) Operation of explosion venting
(3) Operation and unobstructed discharge of sprinklers

5.1.4.2 In addition to the requirement of 5.1.4.1, provisions shall be included for the installation of automatic sprinklers and the functioning of explosion venting, if applicable.

5.1.4.3* Furnaces shall be constructed and located to keep temperatures at combustible floors, ceilings, and walls less than 160°F (71°C).

5.1.4.4 Where electrical wiring is present in floor channels, the wiring shall be installed in accordance with *NFPA 70*, *National Electrical Code*.

5.1.4.5 Floors in the area of mechanical pumps, oil burners, or other equipment using oil shall be provided with a noncombustible, nonporous surface to prevent floors from becoming soaked with oil.

5.2 Furnace Design.

5.2.1 Furnaces and related equipment shall be designed to minimize the fire hazard inherent in equipment operating at elevated temperatures.

5.2.2 Furnace components exposed simultaneously to elevated temperatures and air (oxygen) shall be constructed of noncombustible material.

5.2.3* Furnace structural supports and material-handling equipment shall be designed with the structural strength needed to support the furnace and work when operating at maximum operating conditions, including maximum temperature.

5.2.4* Furnaces shall withstand the strains imposed by expansion and contraction, as well as static and dynamic mechanical loads.

5.2.5 Heating devices and heating elements of all types shall be constructed or located so as to resist mechanical damage from falling work, material handling, or other mechanical hazards.

5.2.6 Furnace and related equipment shall be designed and located so as to provide access for required inspection and maintenance.

5.2.6.1* Ladders, walkways, or access facilities shall be provided so that equipment can be operated or accessed for testing and maintenance.

5.2.6.2 Means shall be provided for entry by maintenance and other personnel.

5.2.7 Radiation shields, refractory material, and insulation shall be retained or supported so they do not fall out of place under designed use and maintenance.

5.2.8 External parts of furnaces that operate at temperatures in excess of 160°F (71°C) shall be guarded by location, guard rails, shields, or insulation to prevent accidental contact with personnel.

5.2.8.1 Bursting discs or panels, mixer openings, and other parts of the furnace from which flame or hot gases could be discharged shall be located or guarded to prevent injury to personnel.

5.2.8.2 Where impractical to provide adequate shields or guards required by 5.2.8, warning signs or permanent floor markings visible to personnel entering the area shall be provided.

5.2.9 Observation ports or other visual means for observing the operation of individual burners shall be provided and shall be protected from radiant heat and physical damage.

5.2.10* Each portion of a closed cooling system that can exceed the design pressure shall be equipped with the following:

(1) Pressure relief
(2) Flow switches equipped with audible and visual alarms

5.2.11 Open cooling systems utilizing unrestricted sight drains observable by the operator shall not require flow switches.

5.2.12 Where a cooling system is critical to continued safe operation of a furnace, the cooling system shall continue to operate after a safety shutdown or power failure.

5.2.13* Furnaces shall be designed to minimize fire hazards due to the presence of combustible products or residue in the furnace.

5.2.14 Furnace hydraulic systems shall utilize either fire-resistant fluids or flammable hydraulic fluids where approved and failure of hydraulic system components cannot result in a fire hazard.

5.2.15 The metal frames of furnaces shall be electrically grounded.

5.2.16* Water-cooled components, such as vacuum vessels, shall be designed with minimum wall thicknesses in accordance with vessel standards.

5.2.17 A corrosion allowance shall be specified where appropriate.

5.3* Explosion Relief.

5.3.1* Fuel-fired furnaces and furnaces that contain flammable liquids, gases, or combustible dusts shall be equipped with unobstructed explosion relief for freely relieving internal explosion pressures except in the following cases:

(1) Explosion relief shall not be required on furnaces with shell construction having 3⁄16 in. (4.8 mm) or heavier steel plate shells reinforced with structural steel beams and buckstays that support and retain refractory or insulating materials that are required for temperature endurance, which makes them unsuitable for the installation of explosion relief.
(2) Explosion-relief panels shall not be required for low-oxygen atmosphere ovens designed and protected in accordance with 13.5.12.
(3) The requirements for explosion relief shall not apply to thermal oxidizers.
(4) The requirements for explosion relief shall not apply to Class D furnaces.
(5) Explosion-relief panels shall not be required in the work chamber of indirect fired ovens where it is demonstrated by calculation that the combustible concentration in the work chamber cannot exceed 25 percent of the lower flammable limit (LFL) under any conditions.
(6)* Explosion relief shall not be required for the combustion chamber of an indirect-fired oven that incorporates a single combustion airflow path through the heat exchanger and does not recirculate the products of combustion.

Copyright 2014 National Fire Protection Association (NFPA). Licensed, by agreement, for individual use and download on October 4, 2014 to LEADER and READER for designated user PATTARAPORN SRITRAKOOL. No other reproduction or transmission in any form permitted without written permission of NFPA. For inquires or to report unauthorized use, contact licensing@nfpa.org.

5.3.2* Explosion relief shall be based on one of the following:

(1) The amount of explosion relief area shall be at least 1 ft^2 (0.093 m^2) of relief area for each 15 ft^3 (0.424 m^3) of furnace volume.
(2) The amount of explosion relief shall be based on the requirements of NFPA 68, *Standard on Explosion Protection by Deflagration Venting*.

5.3.3 Hinged panels, openings, or access doors equipped with approved explosion-relief hardware shall be permitted to be included in the ratio specified in 5.3.2.

5.3.4 Explosion-relief vents shall be arranged so that, when open, the full vent opening provides an effective relief area.

5.3.4.1 The operation of vents to their full capacity shall not be obstructed.

5.3.4.2 Warning signs shall be posted on the vents.

5.3.5* Explosion-relief vent(s) shall be located as close as practical to each known source of ignition to minimize damage.

5.3.6 Explosion-relief vents shall be located or retained so that personnel are not exposed to injury by operation of the vents.

5.3.7* Where explosion relief is required, explosion-relief vents shall activate at a surge pressure that does not exceed the design pressure of the oven enclosure.

5.3.8* Explosion-relief vents for a long furnace shall be distributed throughout the entire furnace length with the maximum distance between explosion-relief vents not to exceed five times the oven's smallest inside dimension (width or height).

5.4* Ventilation and Exhaust System.

5.4.1* Building Makeup Air. A quantity of makeup air shall be admitted to oven rooms and buildings to provide the air volume required for oven safety ventilation and combustion air.

5.4.2 Fans and Motors.

5.4.2.1 Electric motors that drive exhaust or recirculating fans shall not be located inside the oven or ductwork, except within vacuum furnaces.

5.4.2.2 Oven recirculation and exhaust fans shall be designed for the maximum oven temperature and for material and vapors being released during the heating process.

5.4.3 Ductwork.

5.4.3.1 Ventilating and exhaust systems, where applicable, shall be installed in accordance with Chapters 1 through 5 of NFPA 91, *Standard for Exhaust Systems for Air Conveying of Vapors, Gases, Mists, and Noncombustible Particulate Solids*, unless otherwise noted in this standard.

5.4.3.2 Wherever furnace ducts or stacks pass through combustible walls, floors, or roofs, either noncombustible insulation or clearance, or both, shall be provided to prevent combustible surface temperatures from exceeding 160°F (71°C).

5.4.3.3* Where ducts pass through noncombustible walls, floors, or partitions, the space around the duct shall be sealed with noncombustible material to maintain the fire resistance rating of the barrier.

5.4.3.4 Ducts shall be constructed entirely of sheet steel or other noncombustible material capable of meeting the intended installation and conditions of service, and the installation shall be protected where subject to physical damage.

5.4.3.5 Access doors shall be provided to allow for inspection and cleaning of the interior surfaces of ducts handling flammable vapors or combustible solids.

5.4.3.6 No portions of the building shall be used as an integral part of the duct leading to the approved point of discharge.

5.4.3.7* All ducts shall be made tight throughout and shall have no openings other than those required for the operation and maintenance of the system.

5.4.3.8 All ducts shall be braced where required and shall be supported by metal hangers or brackets.

5.4.3.9 Ducts handling flammable vapors shall be designed to minimize the condensation of the vapors out of the exhaust airstream onto the surface of the ducts.

5.4.3.10 Ducts handling combustible solids shall be designed to minimize the accumulation of solids within the ducts.

5.4.3.11 Hand holes for damper, sprinkler, or fusible link inspection or resetting and for purposes of residue clean-out shall be equipped with tight-fitting doors or covers.

5.4.3.12 Exposed hot fan casings and hot ducts [temperatures exceeding 160°F (71°C)] shall be guarded by location, guard rails, shields, or insulation to prevent injury to personnel.

5.4.3.13* Exhaust ducts shall not discharge near openings or other air intakes where effluents can be entrained and directed to locations creating a hazard.

5.4.3.14 A collecting and venting system for radiant tube heating systems shall be provided in accordance with Section 6.5.

5.5 Mountings and Auxiliary Equipment.

5.5.1 Pipes, valves, and manifolds shall be mounted so as to provide protection against damage by heat, vibration, and mechanical hazard.

5.5.2 Furnace systems shall have provisions such as motion stops, lockout devices, or other safety mechanisms to prevent injury to personnel during maintenance or inspection.

5.5.3 Instrumentation and control equipment shall meet the following criteria:

(1) Located for ease of observation, adjustment, and maintenance
(2) Protected from physical and thermal damage and other hazards

5.5.4 Auxiliary equipment such as conveyors, racks, shelves, baskets, and hangers shall be noncombustible and designed to facilitate cleaning.

5.5.5 External Heat Exchangers. External heat exchangers used for the purpose of extracting heat from a recirculating cooling gas shall be enclosed in a vacuumtight chamber that has a leak rate not exceeding the leak rate specified by the manufacturer for the furnace chamber.

5.5.5.1 Heat exchangers, components, and connections shall be free from water and air leaks.

5.5.5.2 Heat exchangers shall be installed or located to prevent damage from vibration and thermal damage due to expansion and contraction.

5.5.5.3 Heat exchanger components shall have the design strength to resist permanent deformation while exposed to the

Copyright 2014 National Fire Protection Association (NFPA). Licensed, by agreement, for individual use and download on October 4, 2014 to LEADER and READER for designated user PATTARAPORN SRITRAKOOL. No other reproduction or transmission in any form permitted without written permission of NFPA. For inquires or to report unauthorized use, contact licensing@nfpa.org.

simultaneous maximum pressure of the coolant source and the maximum vacuum or pressure attained in the furnace.

5.5.6 Fans and Motors for Gas Quenching Systems.

5.5.6.1 Fans shall not be exposed to any temperature in excess of their design temperature rating.

5.5.6.2 Electric fan motors shall be interlocked to prevent operation at less than a chamber pressure of 7 psi (48 kPa) absolute in order to prevent motor failure.

5.5.6.3 Where motor windings are exposed to argon gas or other ionizing gases, the voltage on the motor shall be limited to 260 volts maximum.

5.5.7 Quenching Gas. When introduced at the quenching temperature, the recirculating gas shall be one that is not harmful to the heating elements, furnace heat shields or insulation, or work.

Chapter 6 Furnace Heating Systems

6.1 General.

6.1.1 For the purposes of this chapter, the term *furnace heating system* shall include the heating source, the associated piping and wiring used to heat the furnace, and the work therein as well as the auxiliary quenches, atmosphere generator, and other components.

6.1.2 All components of the furnace heating system and control cabinet shall be grounded.

6.2* Fuel Gas–Fired Units.

6.2.1 General. Burners, along with associated mixers, valves, regulators, safety controls, and other auxiliary components, shall be selected for the intended application, type, and pressure of the fuel gases to be used and temperatures to which they are subjected.

6.2.2* Combustion Air.

6.2.2.1 The fuel-burning system design shall provide a supply of clean combustion air delivered in amounts prescribed by the furnace designer or burner manufacturer across the full range of burner operation.

6.2.2.2 Products of combustion shall not be mixed with the combustion air supply.

6.2.2.3 The requirement of 6.2.2.2 shall not prevent the use of flue gas recirculation systems specifically designed to accommodate such recirculation.

6.2.2.4* Where primary or secondary combustion air is provided mechanically, combustion airflow or pressure shall be proven and interlocked with the safety shutoff valves so that fuel gas cannot be admitted prior to establishment of combustion air and so that the gas is shut off in the event of combustion air failure.

6.2.2.5 Where a secondary air adjustment is provided, adjustment shall include a locking device to prevent an unintentional change in setting.

6.2.3 Fuel Gas Supply Piping.

6.2.3.1* An emergency shutoff valve shall be provided that meets the following requirements:

(1) It shall be remotely located away from the furnace so that fire or explosion at a furnace does not prevent access to the valve.
(2) It shall be readily accessible.
(3) It shall have permanently affixed visual indication of the valve position.
(4) A removable handle shall be permitted provided all the following requirements are satisfied:
   (a) The valve position shall be clearly indicated whether the handle is attached or detached.
   (b) The valve handle shall be tethered to the gas main no more than 3 ft (1 m) from the valve in a manner that does not cause personnel safety issues and that allows trouble-free reattachment of the handle and operation of the valve without untethering the handle.
(5) It shall be able to be operated from full open to full close and return without the use of tools.

6.2.3.2 Installation of LP-Gas storage and handling systems shall comply with NFPA 58, *Liquefied Petroleum Gas Code*.

6.2.3.3 Piping from the point of delivery to the equipment isolation valve shall comply with NFPA 54, *National Fuel Gas Code*. *(See 6.2.4.2.)*

6.2.3.4 An equipment isolation valve shall be provided.

6.2.4 Equipment Fuel Gas Piping.

6.2.4.1 Equipment Isolation Valves. Equipment isolation valves shall meet the following requirements:

(1) They shall be provided for each piece of equipment.
(2) They shall have permanently affixed visual indication of the valve position.
(3) They shall be quarter-turn valves with stops.
(4) Wrenches or handles shall remain affixed to valves and shall be oriented with respect to the valve port to indicate the following:
   (a) An open valve when the handle is parallel to the pipe
   (b) A closed valve when the handle is perpendicular to the pipe
(5) They shall be readily accessible.
(6) Valves with removable wrenches shall not allow the wrench handle to be installed perpendicular to the fuel gas line when the valve is open.
(7) They shall be able to be operated from full open to full close and return without the use of tools.

6.2.4.2* Piping and Fittings.

(A) Fuel gas piping materials shall be in accordance with NFPA 54, *National Fuel Gas Code*.

(B) Fuel gas piping shall be sized to provide flow rates and pressure to maintain a stable flame over the burner operating range.

6.2.5 Control of Contaminants.

6.2.5.1 A sediment trap or other acceptable means of removing contaminants shall be installed downstream of the equipment isolation valve and upstream of all other fuel gas system components.

6.2.5.2 Sediment traps shall have a vertical leg with a minimum length of three pipe diameters [minimum of 3 in. (80 mm)] of the same size as the supply pipe as shown in Figure 6.2.5.2.

Copyright 2014 National Fire Protection Association (NFPA). Licensed, by agreement, for individual use and download on October 4, 2014 to LEADER and READER for designated user PATTARAPORN SRITRAKOOL. No other reproduction or transmission in any form permitted without written permission of NFPA. For inquires or to report unauthorized use, contact licensing@nfpa.org.

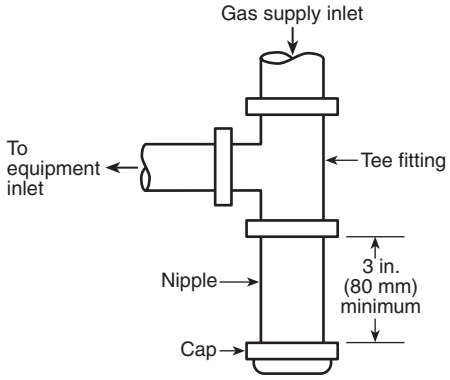

FIGURE 6.2.5.2 Method of Installing a Tee Fitting Sediment Trap. [54:Fig. 9.6.7]

6.2.5.3* A gas filter or strainer shall be installed in the fuel gas piping and shall be located downstream of the equipment isolation valve and sediment trap and upstream of all other fuel gas system components.

6.2.6 Pressure Regulators, Pressure Relief Valves, and Pressure Switches.

6.2.6.1 A pressure regulator shall be furnished wherever the plant supply pressure exceeds the burner operating or design parameters or wherever the plant supply pressure is subject to fluctuations, unless otherwise permitted by 6.2.6.2.

6.2.6.2 An automatic flow control valve shall be permitted to meet the requirement of 6.2.6.1, provided it can compensate for the full range of expected source pressure variations.

6.2.6.3* Regulators, relief valves, and switches shall be vented to an approved location, and the following criteria also shall be met:

(1) Heavier-than-air flammable gases shall be vented outside the building to a location where the gas is diluted below its LFL before coming in contact with sources of ignition or re-entering the building.
(2) Vents shall be designed to prevent the entry of water and insects without restricting the flow capacity of the vent.

6.2.6.4* Fuel gas regulators, ratio regulators, and zero governors shall not be required to be vented to an approved location in the following situations:

(1) Where backloaded from combustion air lines, air–gas mixture lines, or combustion chambers, provided that gas leakage through the backload connection does not create a hazard
(2) Where a listed regulator–vent limiter combination is used
(3) Where a regulator system is listed for use without vent piping
(4) A regulator incorporating a leak limiting system, which prevents or restricts the escape of gas into a space large enough and with sufficient natural ventilation so that the escaping gas does not present a hazard

6.2.6.5* A pressure switch shall not be required to be vented if it employs a vent limiter rated for the service intended.

6.2.6.6 Fuel gas regulators and zero governors shall not be backloaded from oxygen or oxygen-enriched air lines.

6.2.6.7 Vent lines from multiple furnaces shall not be manifolded together.

6.2.6.8 Vents from systems operating at different pressure control levels shall not be manifolded together.

6.2.6.9 Vents from systems served from different pressure-reducing stations shall not be manifolded together.

6.2.6.10 Vents from systems using different fuel sources shall not be manifolded together.

6.2.6.11 Vent lines from multiple regulators and switches of a single furnace, where manifolded together, shall be piped in such a manner that any gas being vented from one ruptured diaphragm does not backload the other devices.

6.2.6.12 The cross-sectional area of the manifold line shall not be less than the greater of the following:

(1) The cross-sectional area of the largest vent plus 50 percent of the sum of the cross-sectional areas of the additional vent lines
(2) The sum of the cross-sectional areas of the two largest vent lines.

6.2.6.13* A vent between safety shutoff valves, where installed:

(1) Shall not be combined with other vents
(2)*Shall terminate to an approved location

6.2.7 Overpressure Protection.

6.2.7.1 Overpressure protection shall be provided in either of the following cases:

(1) When the supply pressure exceeds the pressure rating of any downstream component
(2) When the failure of a single upstream line regulator or service pressure regulator results in a supply pressure exceeding the pressure rating of any downstream component

6.2.7.2 Overpressure protection shall be provided by any one of the following:

(1) A series regulator in combination with a line regulator or service pressure regulator
(2) A monitoring regulator installed in combination with a line regulator or service pressure regulator
(3) A full-capacity pressure relief valve
(4) An overpressure cutoff device, such as a slam-shut valve or a high-pressure switch in combination with an adequately rated shutoff valve

6.2.7.3* When a relief valve is used to comply with 6.2.7.1, the relief valve shall be a full-capacity relief type.

6.2.7.4 Token relief valves and internal token relief valves shall not be permitted to be used as the only overpressure protection devices.

6.2.8 Flow Control Valves. Where the minimum or maximum flow of combustion air or the fuel gas is critical to the operation of the burner, flow valves shall be equipped with limiting means and with a locking device to prevent an unintentional change in the setting.

6.2.9 Air–Fuel Gas Mixers.

6.2.9.1* General. Subsection 6.2.9 shall apply only to mixtures of fuel gas with air and not to mixtures of fuel gas with oxygen or oxygen-enriched air. Oxygen shall not be introduced into air–fuel gas mixture piping, fuel gas mixing machines, or air–fuel gas mixers.

Copyright 2014 National Fire Protection Association (NFPA). Licensed, by agreement, for individual use and download on October 4, 2014 to LEADER and READER for designated user PATTARAPORN SRITRAKOOL. No other reproduction or transmission in any form permitted without written permission of NFPA. For inquires or to report unauthorized use, contact licensing@nfpa.org.

6.2.9.2 Proportional Mixing.

(A) Piping shall be designed to provide a uniform mixture flow of pressure and velocity needed for stable burner operation.

(B) Valves or other obstructions shall not be installed between a proportional mixer and burners, unless otherwise permitted by 6.2.9.2(C).

(C) Fixed orifices shall be permitted for purposes of balancing.

(D) Any field-adjustable device built into a proportional mixer (e.g., gas orifice, air orifice, ratio valve) shall incorporate a device to prevent unintentional changes in the setting.

(E) Where a mixing blower is used, safety shutoff valves shall be installed in the fuel gas supply and shall interrupt the fuel gas supply automatically when the mixing blower is not in operation or in the event of a fuel gas supply failure.

(F) Mixing blowers shall not be used with fuel gases containing more than 10 percent free hydrogen (H_2).

(G) Mixing blowers having a static delivery pressure of more than 10 in. w.c. (2.49 kPa) shall be considered mixing machines.

6.2.9.3 Mixing Machines.

(A)* Automatic fire checks shall be provided in piping systems that distribute flammable air–fuel gas mixtures from a mixing machine.

(B) The automatic fire check shall be installed at the burner inlet(s), and the manufacturer's installation guidelines shall be followed.

(C) A separate, manually operated gas valve shall be provided at each automatic fire check for shutting off the flow of an air–fuel mixture through the fire check after a flashback has occurred.

> **CAUTION:** These valves shall not be reopened after a flashback has occurred until the fire check has cooled sufficiently to prevent reignition of the flammable mixture and has been properly reset.

(D) The valves required by 6.2.9.3 shall be located upstream of the inlets of the automatic fire checks.

(E)* A backfire arrester with a safety blowout device shall be installed in accordance with the manufacturer's instructions near the outlet of each mixing machine that produces a flammable air–fuel gas mixture.

(F) Where a mixing machine is used, safety shutoff valves shall be installed in the fuel gas supply and shall interrupt the fuel gas supply automatically when the mixing machine is not in operation or in the event of an air or fuel gas supply failure.

6.2.10 Fuel Gas Burners.

6.2.10.1 All burners shall maintain the stability of the designed flame shape, without flashback or blowoff, over the entire range of turndown that is encountered during operation under both of the following conditions:

(1) Where supplied with combustion air (oxygen-enriched air or oxygen)
(2) Where supplied with the designed fuels in the designed proportions and in the designed pressure ranges

6.2.10.2 Burners shall be used only with the fuels for which they are designed.

6.2.10.3 All pressures required for operation of the combustion system shall be maintained within the design ranges throughout the firing cycle.

6.2.10.4 Burners shall have the ignition source sized and located in a position that provides ignition of the pilot or main flame within the design trial-for-ignition period.

6.2.10.5 Burners that cannot be ignited at all firing rates shall have provision to adjust the burner firing rate during light-off to a level that ensures ignition of the main flame without flashback or blowoff.

6.2.10.6 Radiant tube heating systems using metallic tubes open at one or both ends shall not require explosion resistance validation.

6.2.10.7* A manufacturer's claim of explosion-resistant radiant tube heating systems using nonmetallic tubes or metallic tubes sealed in at both ends shall be validated.

6.2.11 Fuel Ignition.

6.2.11.1* The ignition source (e.g., electric spark, hot wire, pilot burner, handheld torch) shall be applied at the design location with the designed intensity to ignite the air–fuel mixture.

6.2.11.2 Fixed ignition sources shall be mounted to prevent unintentional changes in location and in direction with respect to the main flame.

6.2.11.3 Pilot burners shall be considered burners, and all provisions of Section 6.2 shall apply.

6.2.12 Dual-Fuel and Combination Burners. Where fuel gas and fuel oil are to be fired individually (dual-fuel) or simultaneously (combination), the provisions of Sections 6.2, 6.3, and 8.13 shall apply equally to the respective fuels.

6.3* Oil-Fired Units.

6.3.1 General. Burners, along with associated valving, safety controls, and other auxiliary components, shall be selected for the type and pressure of the fuel oil to be used and for the temperatures to which they are subjected.

6.3.2* Combustion Air.

6.3.2.1 The fuel-burning system design shall provide for a supply of clean combustion air delivered in the amounts prescribed by the furnace designer or burner manufacturer across the full range of burner operation.

6.3.2.2 Products of combustion shall not short-circuit back into the combustion air, except where so designed.

6.3.2.3 Where primary or secondary combustion air is provided mechanically, combustion airflow or pressure shall be proved and interlocked with the safety shutoff valves so that oil cannot be admitted prior to establishment of combustion air and so that the oil is shut off in the event of combustion air failure.

6.3.2.4 Where a secondary air adjustment is provided, adjustment shall include a locking device to prevent an unintentional change in setting.

6.3.3 Oil Supply Piping.

6.3.3.1 The fuel oil supply to a furnace shall be capable of being shut off at a location remote from the furnace so that fire or explosion at the furnace does not prevent access to the fuel oil shutoff.

Copyright 2014 National Fire Protection Association (NFPA). Licensed, by agreement, for individual use and download on October 4, 2014 to LEADER and READER for designated user PATTARAPORN SRITRAKOOL. No other reproduction or transmission in any form permitted without written permission of NFPA. For inquires or to report unauthorized use, contact licensing@nfpa.org.

6.3.3.2 The fuel oil shutoff shall be by either of the following:

(1) Emergency shutoff valve that meets the following requirements:
   (a) It shall be remotely located away from the furnace so that fire or explosion at a furnace does not prevent access to this valve.
   (b) It shall be readily accessible.
   (c) It shall have permanently affixed visual indication of the valve position.
   (d) A removable handle shall be permitted provided all the following requirements are satisfied:
      i. The valve position shall be clearly indicated whether the handle is attached or detached.
      ii. The valve handle shall be tethered to the gas main no more than 3 ft (1 m) from the valve in a manner that does not cause personnel safety issues and that allows trouble-free reattachment of the handle and operation of the valve without untethering the handle.
   (e) It shall be able to be operated from full open to full close and return without the use of tools.
(2) Means for removing power to the positive displacement fuel oil pump

6.3.3.3 Where a shutoff is installed in the discharge line of an oil pump that is not an integral part of a burner, a pressure relief valve shall be connected to the discharge line between the pump and the shutoff valve and arranged to return surplus oil to the supply tank or to bypass it around the pump, unless the pump includes an internal bypass.

6.3.3.4* All air from the supply and return piping shall be purged initially, and air entrainment in the oil shall be minimized.

6.3.3.5 Suction, supply, and return piping shall be sized with respect to oil pump capacity.

6.3.3.6* Where a section of oil piping can be shut off at both ends, relief valves or expansion chambers shall be installed to release the pressure caused by thermal expansion of the oil.

6.3.3.7 An equipment isolation valve shall be provided.

6.3.4 Equipment Oil Piping.

6.3.4.1 Manual Shutoff Valves.

(A) Individual manual shutoff valves for equipment isolation shall be provided for shutoff of the fuel to each piece of equipment.

(B) Manual shutoff valves shall be installed to avoid oil spillage during servicing of supply piping and associated components.

(C) Manual shutoff valves shall display a visual indication of the valve position.

(D) Quarter-turn valves with removable wrenches shall not allow the wrench handle to be installed perpendicular to the fuel oil line when the valve is open.

(E) The user shall keep separate wrenches (handles) affixed to valves and keep the wrenches oriented with respect to the valve port to indicate the following:

(1) An open valve when the handle is parallel to the pipe
(2) A closed valve when the handle is perpendicular to the pipe

(F)* Valves shall be maintained in accordance with the manufacturer's instructions.

(G) Lubricated valves shall be lubricated and subsequently leak tested for valve closure at least annually.

6.3.4.2 Piping and Fittings.

(A) Fuel oil piping materials shall be in accordance with NFPA 31, *Standard for the Installation of Oil-Burning Equipment*.

(B) Fuel oil piping shall be sized to provide flow rates and pressure to maintain a stable flame over the burner operating range.

6.3.4.3* Oil Filters and Strainers. An oil filter or strainer shall meet the following criteria:

(1) Be selected for the maximum operating pressure and temperature anticipated
(2) Be selected to filter particles larger than the most critical clearance in the fuel oil system
(3) Be installed in the fuel oil piping system downstream of the equipment isolation valve and upstream of all other fuel oil piping system components

6.3.4.4 Pressure Regulation. Where the oil pressure exceeds that required for burner operation or where the oil pressure is subject to fluctuations, either a pressure regulator or an automatic flow control valve that can compensate for the full range of expected source pressure variations shall be installed.

6.3.4.5* Pressure Gauges. Pressure gauges shall be isolated or protected from pulsation damage during operation of the burner system.

6.3.5 Flow Control Valves. Where the minimum or maximum flow of combustion air or the fuel oil is critical to the operation of the burner, flow valves shall be equipped with a limiting means and with a locking device to prevent an unintentional change in the setting.

6.3.6 Oil Atomization.

6.3.6.1* Oil shall be atomized to droplet size as required for combustion throughout the firing range.

6.3.6.2 The atomizing device shall be accessible for inspection, cleaning, repair, replacement, and other maintenance as required.

6.3.7 Oil Burners.

6.3.7.1 All burners shall maintain both the stability of the designed flame shape over the entire range of turndown encountered during operation where supplied with combustion air (oxygen-enriched air or oxygen) and the stability of designed fuels in the designed proportions and in the designed pressure ranges.

6.3.7.2 All pressures required for the operation of the combustion system shall be maintained within the design ranges throughout the firing cycle.

6.3.7.3 All burners shall be supplied with fuel oil of the grade for which they have been designed and with fuel oil that has been preconditioned, where necessary, to the viscosity required by the burner design.

6.3.7.4 Burners shall have the ignition source sized and located in a position that provides ignition of the pilot or main flame within the design trial-for-ignition period.

(A) Self-piloted burners shall have a transition from pilot flame to main flame.

Copyright 2014 National Fire Protection Association (NFPA). Licensed, by agreement, for individual use and download on October 4, 2014 to LEADER and READER for designated user PATTARAPORN SRITRAKOOL. No other reproduction or transmission in any form permitted without written permission of NFPA. For inquires or to report unauthorized use, contact licensing@nfpa.org.

(B) Burners that cannot be ignited at all firing rates shall have provision to reduce the burner firing rates during light-off to a lower level, which ensures ignition of the main flame without flashback or blowoff.

6.3.7.5 If purging of oil passages upon termination of a firing cycle is required, it shall be done prior to shutdown with the initial ignition source present and with all associated fans and blowers in operation.

6.3.8 Fuel Ignition.

6.3.8.1* The ignition source shall be applied at the design location with the design intensity to ignite the air–fuel mixture.

6.3.8.2 Fixed ignition sources shall be mounted so as to prevent unintentional changes in location and in direction with respect to the main flame.

6.3.8.3 Pilot burners shall be considered burners.

6.3.9 Dual-Fuel and Combination Burners. Where fuel gas and fuel oil are fired individually (dual-fuel) or simultaneously (combination), the provisions of Sections 6.2, 6.3, and 8.13 shall apply equally to the respective fuels.

6.4* Oxygen-Enhanced Fuel-Fired Units.

6.4.1 General. The requirements of Section 6.4 shall be in addition to those in Sections 6.2 and 6.3 and Chapter 8.

6.4.2 Combustion Systems Utilizing Oxygen.

6.4.2.1 Oxygen storage and delivery systems shall comply with NFPA 55, *Compressed Gases and Cryogenic Fluids Code*.

6.4.2.2 Oxygen shall not be introduced into inlet or discharge piping of air compressors or blowers that are internally lubricated with petroleum oils, greases, or other combustible substances.

6.4.3 Oxygen Piping and Components.

6.4.3.1 Design, materials of construction, installation, and tests of oxygen piping shall comply with the applicable sections of ASME B31.3, *Process Piping*.

6.4.3.2* Materials and construction methods used in the installation of the oxygen piping and components shall be compatible with oxygen.

6.4.3.3* Piping and components that come in contact with oxygen shall be cleaned prior to admitting gas.

6.4.3.4* Air introduced into oxygen passages in burners, such as cooling air, shall be free of particulate matter, oil, grease, and other combustible materials.

6.4.3.5 A remotely located shutoff valve shall be provided to allow the oxygen to be turned off in an emergency.

6.4.3.6 The shutoff valve shall be located so that fire or explosion at a furnace does not prevent access to the valve.

6.4.3.7 Oxygen from pressure relief devices and purge outlets shall not be released into pipes or manifolds where it can mix with fuel.

6.4.3.8* Oxygen from pressure relief devices and purge outlets shall be vented to an approved location by vents designed to prevent the entry of water and insects.

6.4.3.9 Means shall be provided to prevent oxygen, fuel, or air from intermixing in burner supply lines due to valve leakage, burner plugging, or other system malfunctions.

6.4.3.10* Oxygen piping and components shall be inspected and maintained.

6.4.3.11 If glass tube flowmeters are used in oxygen service, safeguards against personnel injury from possible rupture shall be provided.

6.4.3.12* The piping fed from a cryogenic supply source shall be protected from excessive cooling by means of an automatic low-temperature shutoff device.

6.4.3.13 Piping and controls downstream of an oxygen pressure-reducing regulator shall be able to withstand the maximum potential upstream pressure or shall be protected from overpressurization by means of a pressure relief device.

6.4.4 Oxygen Flow Control Valves.

6.4.4.1 Where the minimum or the maximum flow of oxygen or oxygen-enriched air is critical to the operation of the burner, flow control valves shall be equipped with limiting means and a locking device to prevent an unintentional change in the setting.

6.4.4.2 Where the source oxygen pressure exceeds that required for burner operation or where the source pressure is subject to fluctuations, either an oxygen pressure regulator or an automatic flow control valve that can compensate for the full range of expected source pressure variations and complies with 6.4.4.1 shall be installed.

6.4.5 Oxygen-Enriched Combustion Air.

6.4.5.1 Filters shall be installed in the air blower intake to minimize contamination of the oxygen-enriched air piping.

6.4.5.2* Devices, such as diffusers, that are used to disperse oxygen into an airstream shall be designed to prevent jet impingement of oxygen onto interior surfaces of the air piping.

6.4.5.3 Oxygen-enriched combustion air shall not be introduced into a burner before the oxygen has been uniformly mixed into the airstream.

6.4.5.4 Branching of the enriched-air piping shall not be permitted before a uniform mixture of oxygen and air has been attained.

6.5 Flue Product Venting.

6.5.1 A means shall be provided to ensure ventilation of the products of combustion from fuel-fired equipment.

6.5.2 The following shall apply to collecting and venting systems for radiant tube–type heating systems:

(1) The system shall be of a capacity to prevent an explosion or fire hazard due to the flow of unburned fuel through the radiant tubes.
(2)* The system shall be capable of dilution of the rated maximum input capacity of the system to a noncombustible state.
(3)* A radiant tube–type heating system provided with two safety shutoff valves interlocked with combustion safeguards shall be exempt from the requirements of 6.5.2.

6.6 Electrically Heated Units.

6.6.1 Safety Equipment. Safety equipment, including airflow interlocks, time relays, and temperature switches, shall be in accordance with Chapter 8.

6.6.2* Electrical Installation. All parts of the electrical installation shall be in accordance with *NFPA 70, National Electrical Code*.

Copyright 2014 National Fire Protection Association (NFPA). Licensed, by agreement, for individual use and download on October 4, 2014 to LEADER and READER for designated user PATTARAPORN SRITRAKOOL. No other reproduction or transmission in any form permitted without written permission of NFPA. For inquires or to report unauthorized use, contact licensing@nfpa.org.

6.6.3 Resistance Heating Systems.

6.6.3.1 The provisions of 6.6.3 shall apply to resistance heating systems, including infrared lamps, such as quartz, ceramic, and tubular glass types.

6.6.3.2 Construction.

(A) The heater housing shall be constructed so as to provide access to heating elements and wiring.

(B) Heating elements and insulators shall be supported securely or fastened so that they do not become easily dislodged from their intended location.

(C) Heating elements that are electrically insulated from and supported by a metallic frame shall have the frame electrically grounded.

(D) Open-type resistor heating elements shall be supported by electrically insulated hangers and shall be secured to prevent the effects of motion induced by thermal stress, which could result in adjacent segments of the elements touching one another, or the effects of touching a grounded surface.

(E) External parts of furnace heaters that are energized at voltages that could be hazardous as specified in *NFPA 70, National Electrical Code*, shall be guarded.

6.6.4 Induction and Dielectric Heating Systems.

6.6.4.1 Induction and dielectric heating systems shall be designed and installed in accordance with *NFPA 70, National Electrical Code*.

6.6.4.2 Construction.

(A)* Combustible electrical insulation shall be reduced to a minimum.

(B) Protection shall be installed to prevent overheating of any part of the equipment in accordance with *NFPA 70, National Electrical Code*.

(C) Where water cooling is used for transformers, capacitors, electronic tubes, spark gaps, or high frequency conductors, it shall be arranged as follows:

(1) Cooling coils and connections shall be arranged so that leakage or condensation does not damage the electrical equipment.
(2) The cooling water supply shall be interlocked with the power supply so that loss of water cuts off the power supply.
(3) Where there is more than one waterflow path, the flow interlock required in 6.6.4.2(C)(2) shall be provided for each parallel waterflow path.

(D) Where forced ventilation by motor-driven fans is necessary, the following features shall be provided:

(1) The air supply shall be interlocked with the power supply.
(2) An air filter shall be provided at the air intake.

(E) The conveyor motor and the power supply of dielectric heaters of the conveyor type used to heat combustible materials shall be interlocked to prevent overheating of the material being treated.

(F) Dielectric heaters used for treating highly combustible materials shall be designed to prevent a disruptive discharge between the electrodes.

6.7* Fluid Heating Systems.

6.7.1 General.

6.7.1.1* Piping and fittings shall be in accordance with ASME B31.1, *Power Piping*.

6.7.1.2 The following shall apply to insulated piping containing combustible heat transfer fluid:

(1) Closed-cell, nonabsorptive insulation shall be used.
(2) Fibrous or open-cell insulation shall not be permitted.

6.7.1.3* Oven isolation valves shall be installed as follows:

(1) They shall be installed in the fluid supply and return lines.
(2) If a combustible heat transfer fluid is used, they shall be installed within 5 ft (1.5 m) of the oven.

6.7.1.4 Enclosures or ductwork for heat exchanger coils shall be of noncombustible construction with access openings provided for maintenance and cleaning.

6.7.1.5 Heat exchangers or steam coils shall not be located on the floor of an oven or in any position where paint drippage or combustible material can accumulate on the coils.

6.7.2 Safety Devices.

6.7.2.1 System equipment shall be operated within the temperature and pressure limits specified by the supplier or manufacturer of the heat transfer medium and by the manufacturer of the equipment.

6.7.2.2 If the oven atmosphere is recirculated over the heat exchanger coils, a noncombustible filtration system shall be used if combustible particulates can deposit on the heat exchanger surface.

6.7.2.3 The filtration system and heat exchanger specified in 6.7.2.2 shall be cleaned on a regular schedule.

Chapter 7 Commissioning, Operations, Maintenance, Inspection, and Testing

7.1 Commissioning.

7.1.1* Commissioning shall be required for all new installations or for any changes that affect the safety system.

7.1.2 All apparatus shall be installed and connected in accordance with the system design.

7.1.3* During commissioning, all furnace piping that conveys flammable liquids or flammable gases shall be inspected for leaks.

7.1.4 The furnace shall not be released for operation before the installation and testing of the required safety systems have been successfully completed.

7.1.4.1* Burner management system logic shall be tested and verified for compliance with the design criteria when the burner management system logic is installed, replaced, repaired, or updated.

7.1.4.2 Documentation shall be provided that confirms that all related safety devices and safety logic are functional.

7.1.5 Any changes to the original design made during commissioning shall be reflected in the documentation.

Copyright 2014 National Fire Protection Association (NFPA). Licensed, by agreement, for individual use and download on October 4, 2014 to LEADER and READER for designated user PATTARAPORN SRITRAKOOL. No other reproduction or transmission in any form permitted without written permission of NFPA. For inquires or to report unauthorized use, contact licensing@nfpa.org.

7.1.6* Set points of all safety interlock settings shall be documented.

7.1.7* A confirmed source of flammable gas shall be provided to the inlet of the equipment isolation valve(s) each time a flammable gas supply is placed into service or restored to service. *(See 6.2.4.1 and 13.5.11.10.2.1.)*

7.2 Training.

7.2.1* Personnel who operate, maintain, or supervise the furnace shall be thoroughly instructed and trained in their respective job functions under the direction of a qualified person(s).

7.2.2 Personnel who operate, maintain, or supervise the furnace shall be required to demonstrate an understanding of the equipment, its operation, and practice of safe operating procedures in their respective job functions.

7.2.3 Personnel who operate, maintain, or supervise the furnace shall receive regularly scheduled refresher training and shall demonstrate understanding of the equipment, its operation, and practice of safe operating procedures in their respective job functions.

7.2.4 The training program shall cover startup, shutdown, and lockout procedures in detail.

7.2.5 The training program shall be kept current with changes in equipment and operating procedures, and training materials shall be available for reference.

7.3 Operations.

7.3.1 The furnace shall be operated in accordance with the design parameters.

7.3.2 Personnel instructed and trained per 7.2.1 shall be present within the facility when Class C or D furnaces are operating with material movement, unless the design or a hazard analysis permits unattended operation.

7.3.3 Operating instructions that include all of the following shall be provided by the furnace manufacturer:

(1) Schematic piping and wiring diagrams
(2) Startup procedures
(3) Shutdown procedures
(4) Emergency procedures, including those occasioned by loss of special atmospheres, electric power, inert gas, or other essential utilities
(5) Maintenance procedures, including interlock and valve tightness testing

7.3.4* When the original equipment manufacturer no longer exists, the user shall develop inspection, testing, and maintenance procedures.

7.3.5 Operating procedures shall be established that cover normal and emergency conditions.

7.3.6 Operating procedures shall be directly applicable to the equipment involved and shall be consistent with safety requirements and the manufacturer's recommendations.

7.3.7 Procedures shall be consistent with safety requirements and shall be kept current with changes in equipment and personnel.

7.3.8* Where different modes of operation are possible, procedures shall be prepared for each operating mode and for switching from one mode to another.

7.3.9 Personnel shall have access to operating instructions at all times.

7.3.10 Safety devices shall not be removed or rendered ineffective.

7.4 Inspection, Testing, and Maintenance.

7.4.1 Safety devices shall be maintained in accordance with the manufacturer's instructions.

7.4.2 It shall be the responsibility of the furnace manufacturer to provide instructions for inspection, testing, and maintenance.

7.4.3 It shall be the responsibility of the user to establish, schedule, and enforce the frequency and extent of the inspection, testing, and maintenance program, as well as the corrective action to be taken.

7.4.4 All safety interlocks shall be tested for function at least annually.

7.4.5* The set point of temperature, pressure, or flow devices used as safety interlocks shall be verified at least annually.

7.4.6 Safety device testing shall be documented at least annually.

7.4.7 Calibration of continuous vapor concentration high limit controllers shall be performed in accordance with the manufacturer's instructions and shall be performed at least once per month.

7.4.8 Pressure and explosion relief devices shall be visually inspected at least annually to ensure that they are unobstructed and properly labeled.

7.4.9* Valve seat leakage testing of safety shutoff valves and valve proving systems shall be performed in accordance with the manufacturer's instructions.

7.4.9.1 Testing frequency shall be at least annually.

7.4.9.2 The installation of a valve proving system or a valve with proof of closure shall not replace the requirement for seat leakage testing in 7.4.9.1.

7.4.10 Safety Shutoff Valve Replacement.

7.4.10.1 Safety shutoff valves that are used to comply with 8.5.1.8(4) and are not proved closed shall be replaced before they exceed their maximum allowable number of lifetime open–closed cycles.

7.4.10.2* The number of safety shutoff valve cycles shall be determined by one of the following ways:

(1) Counting of actual safety shutoff valve open-closed cycles
(2) Estimated time to reach 90 percent of lifetime total cycles based on normal cycling rates

7.4.11 Manual shutoff valves shall be maintained in accordance with the manufacturer's instructions.

7.4.12* Lubricated manual shutoff valves shall be lubricated and subsequently leak tested for valve closure at least annually.

7.4.13* Equipment isolation valves and emergency shutoff valves shall be exercised at least annually.

7.4.14* Oxygen piping and components shall be inspected and maintained in accordance with CGA G-4.1, *Cleaning Equipment for Oxygen Service*.

Copyright 2014 National Fire Protection Association (NFPA). Licensed, by agreement, for individual use and download on October 4, 2014 to LEADER and READER for designated user PATTARAPORN SRITRAKOOL. No other reproduction or transmission in any form permitted without written permission of NFPA. For inquires or to report unauthorized use, contact licensing@nfpa.org.

7.4.15* The temperature indication of the excess temperature limit interlock shall be verified to be accurate.

7.4.16 Whenever any safety interlock is replaced, it shall be tested for function.

7.4.17 Whenever any temperature, pressure, or flow device used as a safety interlock is replaced, the set point setting shall be verified.

7.4.18 An inspection shall be completed at least annually to verify that all designed safety interlocks are present and have not been bypassed or rendered ineffective.

7.4.19* When a quantity of flammable gas that can result in a hazardous condition is released as part of installation, commissioning, testing, maintenance, or decommissioning, the gas shall be vented to an approved location.

7.5 Record Retention. Records of inspection, testing, and maintenance activities shall be retained for a period of 1 year or until the next inspection, testing, or maintenance activity, whichever is longer.

7.6* Procedures. The user's operational and maintenance program shall include procedures that apply to entry into equipment in accordance with all applicable regulations.

Chapter 8 Safety Equipment and Application

8.1* General. For the purpose of this chapter, the term *furnace heating system* shall include the heating source, associated piping and wiring used to heat the furnace, auxiliary quenches, and the work therein.

8.2 Safety Device Requirements.

8.2.1* Except as permitted by Section 8.4, combustion safeguards, flame detectors, excess temperature limit interlocks, and safety shutoff valves shall be listed for combustion safety service or approved if a listed device is not commercially available.

8.2.2* Safety devices not identified in 8.2.1 shall be listed for the service intended or approved if a listed device is not commercially available.

8.2.3* Safety devices shall be applied and installed in accordance with this standard and the manufacturer's instructions.

8.2.4 Electric relays and safety shutoff valves shall not be used as substitutes for electrical disconnects and manual shutoff valves.

8.2.5 Regularly scheduled inspection, testing, and maintenance of all safety devices shall be performed. *(See Section 7.4.)*

8.2.6 Safety devices shall be installed, used, and maintained in accordance with the manufacturer's instructions.

8.2.7 Safety devices shall be located or guarded to protect them from physical damage.

8.2.8 Safety devices shall not be bypassed electrically or mechanically.

8.2.8.1 The requirement in 8.2.8 shall not prohibit safety device testing and maintenance in accordance with 8.2.5. Where a system includes a "built-in" test mechanism that bypasses any safety device, it shall be interlocked to prevent operation of the system while the device is in the test mode, unless listed for that purpose.

8.2.8.2 The requirement in 8.2.8 shall not prohibit a time delay applied to the action of pressure-proving, flow-proving, or proof-of-closure safety switch as used in accordance with 8.8.1.3(3), where the following conditions exist:

(1) There is an operational need demonstrated for the time delay.
(2) The use of a time delay is approved.
(3) The time delay feature is not adjustable beyond 5 seconds.
(4) A single time delay does not serve more than one pressure-proving or flow-proving safety device.
(5) The time from an abnormal pressure or flow condition until the holding medium is removed from the safety shutoff valves does not exceed 5 seconds.

8.2.9* At least one manual emergency switch shall be provided to initiate a safety shutdown.

8.2.10* A safety shutdown of the heating system shall require manual intervention of an operator to re-establish normal operation of the system.

8.2.11* Where transmitters are used in place of switches for safety functions, the following shall apply:

(1) The transmitter shall be safety integrity level (SIL) 2 capable.
(2) Transmitter failure shall be detected and initiate a safety shutdown.
(3) The transmitter shall be dedicated to safety service unless listed for simultaneous process and safety service.

8.3* Burner Management System Logic.

8.3.1 General.

8.3.1.1 Purge and ignition trials shall be performed using either devices listed for such service or programmable controllers used in accordance with Section 8.4.

8.3.1.2 The activation of any safety interlock required in Chapter 8 shall result in a safety shutdown.

8.3.1.3 Safety interlocks shall meet one or more of the following criteria:

(1) Be hardwired without relays in series and ahead of the controlled device
(2) Be connected to an input of a programmable controller logic system complying with Section 8.4
(3) Be connected to a relay that represents a single safety interlock that is configured to initiate safety shutdown in the event of power loss
(4) Be connected to a listed safety relay that represents one or more safety interlocks and initiates safety shutdown upon power loss

8.3.1.4* Electrical power for safety control circuits shall be dc or single-phase ac, 250 volt maximum, one-side grounded, with all breaking contacts in the ungrounded, fuse-protected, or circuit breaker–protected line.

8.4* Programmable Logic Controller Systems.

8.4.1 Programmable logic controller (PLC)–based systems listed for combustion safety service shall be used in accordance with the listing requirements and the manufacturer's instructions.

8.4.2* Where PLCs are not listed for combustion safety service or as combustion safeguard, the PLC and its associated input and output (I/O) used to perform safety functions shall be as follows:

Copyright 2014 National Fire Protection Association (NFPA). Licensed, by agreement, for individual use and download on October 4, 2014 to LEADER and READER for designated user PATTARAPORN SRITRAKOOL. No other reproduction or transmission in any form permitted without written permission of NFPA. For inquires or to report unauthorized use, contact licensing@nfpa.org.

(1) Third-party certified to IEC 61508, *Functional Safety of Electrical/Electronic/Programmable Electronic Safety-Related Systems*, safety integrity level (SIL) 2 or greater
(2) Applied to achieve at least an SIL 2 capability per the manufacturer's safety manual

8.4.2.1 Software.

(A) Access to the PLC and its logic shall be restricted to authorized personnel.

(B) Software shall be documented as follows:

(1) Labeled to identify elements or a group of elements containing safety software
(2) Labeled to describe the function of each element containing safety software

(C) A listing of the program with documentation shall be available.

8.4.3 Any PLC shall be permitted to perform purge timing.

8.4.4* Safety PLCs.

(A) Where used for combustion safety service, safety PLCs shall have the following characteristics:

(1) The processor and the I/O shall be listed for control reliable service with an SIL rating of at least 2.
(2) Access to safety functions shall be separate from access to nonsafety functions.
(3) Access to PLC logic dedicated to safety functions shall be restricted to prevent unauthorized changes.
(4)*All safety function sensors and final elements shall be independent of operating sensors and final elements.

(B) Safety PLCs shall not implement the following:

(1) Manual emergency switches
(2) Continuous vapor concentration high-limit controllers

8.5 Safety Control Application for Fuel-Fired Heating Systems.

8.5.1 Pre-ignition (Prepurge, Purging Cycle).

8.5.1.1* Prior to each furnace heating system startup, provision shall be made for the removal of all flammable vapors and gases that have entered the heating chambers during the shutdown period.

8.5.1.2* A timed pre-ignition purge shall be provided.

(A) At least four system volumes of fresh air or inert gas shall be introduced during the purging cycle.

(B) The system volume shall include the heating chambers and all other passages that handle the recirculation and exhaust of products of combustion.

(C) To begin the timed pre-ignition purge interval, all of the following conditions shall be satisfied:

(1)*The minimum required pre-ignition airflow is proved.
(2)*At least one safety shutoff valve is proved closed between all pilot burners and the fuel supply for ovens with total pilot capacity over 400,000 Btu/hr.
(3) At least one safety shutoff valve is proved closed between all main burners and the fuel supply for ovens with total capacity over 400,000 Btu/hr

(D) The minimum required pre-ignition airflow shall be proved and maintained throughout the timed pre-ignition purge interval.

(E) Failure to maintain the minimum required pre-ignition purge airflow shall stop the pre-ignition purge and reset the purge timer.

8.5.1.3 A furnace heating system, either alone or as part of multiple furnaces feeding into one fume incinerator, shall not be purged into an operating incinerator unless otherwise permitted by 8.5.1.4.

8.5.1.4 A furnace heating system shall be permitted to be purged into an operating incinerator if it can be demonstrated that the flammable vapor concentration entering the fume incinerator cannot exceed 50 percent of the LFL.

8.5.1.5 Pre-ignition purging of radiant tube–type heating systems shall be provided, unless otherwise permitted by 8.5.1.6.

8.5.1.6 Pre-ignition purging of radiant tube–type heating systems shall not be required where the systems are arranged and designed such that either of the following conditions is satisfied:

(1) The tubes are of metal construction and open at one or both ends. If heat recovery systems are used, they shall be of explosion-resistant construction.
(2) The entire radiant tube heating system, including any associated heat recovery system, is of explosion-resistant construction.

8.5.1.7 Prior to the re-ignition of a burner after a burner shutdown or flame failure, a pre-ignition purge shall be accomplished.

CAUTION: Repeated ignition attempts can result in a combustible concentration greater than 25 percent of the LFL. Liquid fuels can accumulate, causing additional fire hazards.

8.5.1.8* Repeating the pre-ignition purge shall not be required where any one of the following conditions is satisfied:

(1) The heating chamber temperature is proved to be above 1400°F (760°C).
(2) For a multiburner fuel-fired system not proved to be above 1400°F (760°C), all of the following conditions are satisfied:
   (a)*At least one burner remains operating in the common combustion chamber of the burner to be re-ignited.
   (b) The burner(s) remaining in operation shall provide ignition without explosion of any unintended release of fuel through other burners that are not in operation.
(3)*For fuel gas–fired burner systems and assuming that all safety shutoff valves fail in the full open position, it can be demonstrated that the combustible concentration in the heating chamber and all other passages that handle the recirculation and exhaust of products of combustion cannot exceed 25 percent of the LFL.
(4) All of the following conditions are satisfied (does not apply to fuel oil systems):
   (a) The number of safety shutoff valves required to close in 8.8.1.3 and 8.8.2.1 will close between the burner system and the fuel gas supply when that burner system is off.
   (b) Safety shutoff valve seat leak testing is performed on at least a semiannual basis.
   (c) The burner system uses natural gas, butane, or propane fuel gas.

Copyright 2014 National Fire Protection Association (NFPA). Licensed, by agreement, for individual use and download on October 4, 2014 to LEADER and READER for designated user PATTARAPORN SRITRAKOOL. No other reproduction or transmission in any form permitted without written permission of NFPA. For inquires or to report unauthorized use, contact licensing@nfpa.org.

(d)*It can be demonstrated based on the leakage rate, that the combustible concentration in the heating chamber and all other passages that handle the recirculation and exhaust of products of combustion cannot exceed 25 percent of the LFL.
(e) The minimum airflow used in the LFL calculation in 8.5.1.8(4)(d) is proved and maintained during the period the burner(s) are off.

8.5.2* Trial-for-Ignition Period.

8.5.2.1 The trial-for-ignition period of any pilot or main gas burner shall not exceed 15 seconds, unless both of the following conditions are satisfied:

(1) A written request for an extension of the trial-for-ignition period is approved by the authority having jurisdiction.
(2) It is determined that 25 percent of the LFL cannot be exceeded in the extended time.

8.5.2.2 The trial-for-ignition period of any pilot or main oil burner shall not exceed 15 seconds.

8.5.2.3 Where direct spark ignition systems cause a false flame signal in required flame detectors and combustion safeguards, the electrical spark shall be terminated after the main burner trial-for-ignition period.

8.5.3 Ignition of Main Burners — Fuel Gas or Oil. Where a reduced firing rate is required for ignition of the burner, an interlock shall be provided to prove that the control valve has moved to the design position prior to each attempt at ignition.

8.6 Ventilation Safety Devices.

8.6.1* Where a fan is essential for purge or safety ventilation of an oven or allied equipment, fan operation shall be proved and interlocked into the burner management system.

8.6.1.1 Electrical interlocks and flow switches shall be arranged in the safety control circuit so that loss of ventilation or airflow shuts down the heating system of the affected section, or, if necessary, loss of ventilation shall shut down the entire heating system as well as the conveyor.

8.6.1.2 Air pressure switches shall not be used to prove airflow where dampers downstream of the pressure switch can be closed to the point of reducing airflow below the minimum required.

8.6.1.3 Air suction switches shall not be used to prove airflow where dampers upstream of the pressure switch can be closed to the point of reducing airflow below the minimum required.

8.6.1.4 Switches used to prove airflow on systems where the air is contaminated with any substance that might condense or otherwise create a deposit shall be selected and installed to prevent interference with the performance of the switch.

8.6.2 Dampers capable of being adjusted to a position that can result in an airflow below the minimum required shall be equipped with one of the following features arranged to prevent oven operation when airflow is below the minimum required:

(1) Mechanical stops
(2) Cut-away dampers
(3) Limit switches interlocked into the safety circuitry

8.7 Combustion Air Safety Devices.

8.7.1 Where air from the exhaust or recirculating fans is required for combustion of the fuel, the minimum required airflow shall be interlocked according to Section 8.7.

8.7.2 Where a combustion air blower is used, the minimum combustion airflow or source pressure needed for burner operation shall be proved prior to each attempt at ignition.

8.7.3 Motor starters on equipment required for combustion of the fuel shall be interlocked into the burner management system.

8.7.4* Combustion air minimum pressure or flow shall be interlocked into the burner management system. by any of the following methods:

(1) A low pressure switch that senses and monitors the combustion air source pressure
(2) A differential pressure switch that senses the differential pressure across a fixed orifice in the combustion air system
(3) An airflow switch

8.7.5* Where it is possible for combustion air pressure to exceed the maximum safe operating pressure, a high pressure switch interlocked into the burner management system shall be used.

8.7.6 In any combustion system where the combustion air supply can be diverted to an alternate flow path other than to a burner (e.g., to a regenerative burner system's exhaust path), that burner's associated combustion air flow path valve(s) shall be proved open, and its alternate air flow path valve(s) shall be proved closed, before that burner's fuel safety shutoff valve(s) are energized.

8.8 Safety Shutoff Valves (Fuel Gas or Oil).

8.8.1 General.

8.8.1.1 Safety shutoff valves shall be a key safety control to protect against explosions and fires.

8.8.1.2* Each safety shutoff valve required in 8.8.2.1 and 8.8.3.1 shall automatically shut off the fuel to the burner system after interruption of the holding medium (such as electric current or fluid pressure) by one of the interlocking safety devices, combustion safeguards, or operating controls, unless otherwise permitted by 8.8.1.3.

8.8.1.3* In fuel gas systems or oil systems where multiple burners or pilots operate as a burner system firing into a common heating chamber, shutting off of fuel at one or more burners shall comply with 8.8.1.2 or shall shut off those burner(s) by closing a single safety shutoff valve as long as a second safety shutoff valve between the fuel supply, and the burners shall close when any of the following conditions occurs:

(1) Upon activation of any safety interlock common to the burner system
(2)*Where the individual burner safety shutoff valves do not have proof of closure and it is demonstrated, based on available airflow, that the number of failed burners will result in the furnace being above 25 percent of the LFL, assuming the single burner safety shutoff valve(s) fails in the open position
(3) Where individual burner safety shutoff valves have proof of closure and any of the following conditions occur:
  (a) Where flame supervision is used, the individual burner safety shutoff valve not proved closed after loss of flame signal
  (b) Where flame supervision is not used, the individual burner safety shutoff valve not proved closed when the furnace is not proved to be above 1400°F (760°C)
  (c) Upon loss of flame signal at all burners in the burner system

Copyright 2014 National Fire Protection Association (NFPA). Licensed, by agreement, for individual use and download on October 4, 2014 to LEADER and READER for designated user PATTARAPORN SRITRAKOOL. No other reproduction or transmission in any form permitted without written permission of NFPA. For inquires or to report unauthorized use, contact licensing@nfpa.org.

8.8.1.4 Safety shutoff valves shall not be used as modulating control valves unless they are designed as both safety shutoff and modulation valves and tested for concurrent use.

8.8.1.5 The use of listed safety shutoff valves designed as both a safety shutoff valve and a modulating valve and tested for concurrent use shall be permitted.

8.8.1.6 Safety shutoff valves shall not be open-close cycled at a rate that exceeds that specified by its manufacturer.

8.8.1.7 Valve components shall be of a material selected for compatibility with the fuel handled and for ambient conditions.

8.8.1.8 Safety shutoff valves in systems containing particulate matter or highly corrosive fuel gas shall be operated at time intervals in accordance with the manufacturer's instructions in order to maintain the safety shutoff valves in operating condition.

8.8.1.9 Valves shall not be subjected to supply pressures in excess of the manufacturer's ratings.

8.8.1.10* Valves shall be selected to withstand the maximum anticipated backpressure of the system.

8.8.1.11 Local visual position indication shall be provided at each safety shutoff valve to burners or pilots in excess of 150,000 Btu/hr (44 kW).

(A) The local visual position indication shall directly indicate the physical position, closed and open, of the valve.

(B) Where lights are used for position indication, the absence of light shall not be used to indicate open or closed position.

(C) Indirect indication of valve position, such as by monitoring operator current voltage or pressure, shall not be permitted.

8.8.1.12 Safety shutoff valves shall meet one of the following requirements:

(1) The safety shutoff valves shall close in 1 second or less upon being de-energized.
(2) Where safety shutoff valve closure time exceeds 1 second, the combined time for safety shutoff valve closure and flame failure response shall not exceed 5 seconds.

8.8.2 Fuel Gas Safety Shutoff Valves.

8.8.2.1 Each main and pilot fuel gas burner system shall be separately equipped with either of the following:

(1) Two safety shutoff valves piped in series
(2) For radiant tube–fired burner systems only, a single safety shutoff valve where either of the following conditions is satisfied:
    (a) The tubes are of metal construction and open at one or both ends. If heat recovery systems are used, they shall be of explosion-resistant construction.
    (b) The entire radiant tube heating system, including any associated heat recovery system, is of explosion-resistant construction.

8.8.2.2* Where a safety shutoff valve is required to be proved closed, the following shall apply:

(A) A proved closed condition shall be accomplished by either of the following means:

(1) A proof-of-closure switch incorporated in a listed safety shutoff value assembly in accordance with the terms of the listing
(2) A valve proving system

(B) Auxiliary and closed position indicator switches shall not satisfy the proved closed requirement of 8.8.2.2(A).

8.8.2.3 Means for testing all fuel gas safety shutoff valves for valve seat leakage shall be installed.

8.8.3 Oil Safety Shutoff Valves.

8.8.3.1 One oil safety shutoff valve shall be required, except that two safety shutoff valves shall be required where any one of the following conditions exists:

(1) The pressure is greater than 125 psi (862 kPa).
(2) The fuel oil pump operates without the main oil burner firing, regardless of the pressure.
(3) The fuel oil pump operates during the fuel gas burner operation of combination gas and oil burners.

8.8.3.2* Where two safety shutoff valves are required by 8.8.3.1 and where the burner system capacity exceeds 400,000 Btu/hr (117 kW), at least one of the safety shutoff valves between each burner and the fuel supply shall be proved closed and interlocked with the pre-ignition purge interval.

8.8.3.3 Where an oil safety shutoff valve is required to be proved closed in 8.8.3.2, it shall be accomplished by the use of a proof-of-closure switch incorporated in a listed safety shutoff valve assembly in accordance with the terms of the listing.

8.9* Fuel Pressure Switches (Gas or Oil).

8.9.1 A low fuel pressure switch or sensor shall be provided and shall be interlocked into the burner management system.

8.9.2 A high fuel pressure switch or sensor shall be provided and shall meet the following criteria:

(1) It shall be interlocked into the burner management system.
(2) It shall be located downstream of the final pressure-reducing regulator.

8.9.3 Pressure switch or sensor settings shall be made in accordance with the operating limits of the burner system.

8.10 Flame Supervision.

8.10.1* Each burner shall have a supervised flame monitored by a flame detector and combustion safeguard that are interlocked into the burner management system unless otherwise permitted in 8.10.2.

8.10.2 The following shall not require a supervised flame:

(1) Burner flames for radiant tube–type heating systems where a means of ignition is provided and the systems are arranged and designed such that either of the following conditions is satisfied:
    (a) The tubes are of metal construction and open at one or both ends. If heat recovery systems are used, they shall be of explosion-resistant construction.
    (b) The entire radiant tube heating system, including any associated heat recovery system, is of explosion-resistant construction.
(2) Burner flames at burners interlocked with a 1400°F (760°C) bypass interlock that prevents burner operation when the temperature in the zone where the burner is located is less than 1400°F (760°C).

8.10.3* The flame failure response time shall be 4 seconds or less.

8.10.4 A safe-start check shall be performed during each burner startup sequence.

Copyright 2014 National Fire Protection Association (NFPA). Licensed, by agreement, for individual use and download on October 4, 2014 to LEADER and READER for designated user PATTARAPORN SRITRAKOOL. No other reproduction or transmission in any form permitted without written permission of NFPA. For inquires or to report unauthorized use, contact licensing@nfpa.org.

8.10.5 Where a supervised flame is required for a burner, each pilot and main burner flame shall be equipped with flame supervision in one of the following ways:

(1) Main and pilot flames supervised with independent flame sensors
(2) Main and interrupted pilot flames supervised with a single flame sensor
(3)*Self-piloted burner supervised with a single flame sensor

8.10.6* Line burners, pipe burners, and radiant burners, where installed adjacent to one another or connected with flame-propagating devices, shall be considered to be a single burner and shall have at least one flame detector installed to sense burner flame at the end of the assembly farthest from the source of ignition.

8.10.7 Where a combustion safeguard is required for a burner flame, flame supervision shall not be required in the burner management system of a furnace zone when that zone temperature is greater than 1400°F (760°C) and the following criteria are met:

(1) When the zone temperature drops to less than 1400°F (760°C), the burner is interlocked to allow its operation only if flame supervision has been re-established.
(2) A 1400°F (760°C) bypass interlock is used to meet the requirement of 8.10.2(2).

8.11 Fuel Oil Atomization (Other Than Mechanical Atomization).

8.11.1 The pressure of the atomizing medium shall be proved and interlocked into the burner management system.

8.11.2 The low pressure switch used to supervise the atomizing medium shall be located downstream from all valves that can shut off flow or cause pressure drop of the atomization medium.

8.11.2.1 The low pressure switch used to supervise the atomizing medium shall be permitted to be located upstream of atomizing media balancing orifices and balancing valves provided the balancing devices are equipped with a locking device to prevent an unintentional change in the setting.

8.11.3 Where the atomizing medium requires modulation, an additional low atomizing medium pressure switch, located upstream of the modulating valve, shall be provided to meet the requirements of 8.11.1.

8.12* Fuel Oil Temperature Limit Devices. Where equipment is used to regulate fuel oil temperature, fuel oil temperature limit devices shall be provided and interlocked into the burner management system if it is possible for the fuel oil temperature to rise above or fall below the temperature range required by the burners.

8.13 Multiple-Fuel Systems.

8.13.1* Safety equipment in accordance with the requirements of this standard shall be provided for each fuel used.

8.13.2 Where dual-fuel burners, excluding combination burners, are used, positive provision shall be made to prevent the simultaneous introduction of both fuels.

8.14 Air–Fuel Gas Mixing Machines.

8.14.1 Safety shutoff valves shall be installed in the fuel gas supply connection of any mixing machine.

8.14.2 The safety shutoff valves shall be arranged to shut off the fuel gas supply automatically when the mixing machine is not in operation or in the event of an air or fuel gas supply failure.

8.15 Oxygen Safety Devices.

8.15.1 Two oxygen safety shutoff valves in series shall be provided in the oxygen supply line.

8.15.2 A filter or fine-mesh strainer shall precede the upstream safety shutoff valve.

8.15.3 A high oxygen flow or a high pressure limit shall be interlocked into the burner management system, with the switch located downstream of the final pressure regulator or automatic flow control valve.

8.15.4 A low oxygen flow or a low pressure limit shall be interlocked into the burner management system.

8.15.5 The oxygen safety shutoff valves shall shut automatically after interruption of the holding medium by any one of the interlocking safety devices.

8.15.6 Safety shutoff valves shall not be used as modulating control valves unless they are designed as both safety shutoff and modulation valves and tested for concurrent use.

8.15.7 A means for making tightness checks of all oxygen safety shutoff valves shall be provided.

8.15.8 Local visual position indication shall be provided for each oxygen safety shutoff valve to burners or pilots in excess of 150,000 Btu/hr (44 kW).

8.15.8.1 The position indication shall directly indicate the physical position, closed and open, of the valve.

8.15.8.2 Where lights are used for position indication, the absence of light shall not be used to indicate open or closed position.

8.15.8.3 Indirect indication of valve position, such as by monitoring operator current voltage or pressure, shall not be permitted.

8.15.9 Oxygen-Enriched Burners.

8.15.9.1 Where oxygen is added to a combustion air line, an interlock shall be provided to allow oxygen flow only when airflow is proved continuously.

8.15.9.2 Airflow shall be proved in accordance with the requirements of Section 8.6.

8.15.9.3 Upon loss of oxygen flow, the flow of fuel shall shut off, except where there is no interruption in the flow of combustion air and the control system is able to revert automatically to a safe air–fuel ratio before a hazard due to a fuel-rich flame is created.

8.15.10 Burner systems employing water or other liquid coolants shall be equipped with a low coolant flow limit switch located downstream of the burner and interlocked into the burner management system.

8.15.10.1 A time delay in the shutdown of the oxygen-enriched burner system shall not be permitted except where an alarm is activated and it can be demonstrated that such a delay cannot create a hazard, and the system is approved.

8.15.10.2 Coolant piping systems shall be protected from freezing.

Copyright 2014 National Fire Protection Association (NFPA). Licensed, by agreement, for individual use and download on October 4, 2014 to LEADER and READER for designated user PATTARAPORN SRITRAKOOL. No other reproduction or transmission in any form permitted without written permission of NFPA. For inquires or to report unauthorized use, contact licensing@nfpa.org.

8.15.10.3 Coolant piping systems shall be protected from overpressurization.

8.16* Excess Temperature Limit Interlock.

8.16.1 An excess temperature limit interlock shall be provided and interlocked into the burner management system, unless permitted by 8.16.2.

8.16.2 An excess temperature limit interlock shall not be required for Class B, Class C, or Class D furnaces where it can be demonstrated that the maximum temperature limit specified by the furnace manufacturer cannot be exceeded.

8.16.3 Operation of the excess temperature limit interlock shall cut off the heating system before the oven's maximum temperature, as specified by the oven manufacturer, is exceeded.

8.16.4 Operation of the excess temperature limit interlock shall require manual reset before restart of the furnace or affected furnace zone.

8.16.5 Open-circuit failure of the temperature-sensing components of the excess temperature limit interlock shall cause the same response as an excess temperature condition.

8.16.6* Excess temperature limit interlocks shall be equipped with temperature indication.

8.16.7* The temperature-sensing element of the excess temperature limit interlock shall be selected for the temperature and atmosphere to which they are exposed.

8.16.8* The temperature-sensing element of the excess temperature limit interlock shall be located where recommended by the oven manufacturer or designer.

8.16.9* The excess temperature limit interlock shall indicate its set point in temperature units that are consistent with the primary temperature-indicating controller.

8.16.10 The operating temperature controller and its temperature-sensing element shall not be used as the excess temperature limit interlock.

8.17 1400°F (760°C) Bypass Interlock.

8.17.1 Where flame supervision is switched out of the burner management system or unsupervised burners are brought online, as permitted by 8.10.7 or 8.10.2, a 1400°F (760°C) bypass interlock shall be used.

8.17.2 Open circuit failure of the temperature-sensing components shall cause the same response as an operating temperature less than 1400°F (760°C).

8.17.3* The 1400°F (760°C) bypass interlock shall be equipped with temperature indication.

8.17.4* The temperature-sensing components of the 1400°F (760°C) bypass interlock shall be rated for the temperature and the atmosphere to which they are exposed.

8.17.5 The temperature-sensing element of the 1400°F (760°C) bypass interlock shall be located so that unsupervised burners are not allowed to operate at temperatures below 1400°F (760°C).

8.17.6 The 1400°F (760°C) bypass interlock set point shall not be set below 1400°F (760°C) and shall indicate its set point in units of temperature (degrees Fahrenheit or degrees Celsius) that are consistent with the primary temperature-indicating controller.

8.17.7 Visual indication shall be provided to indicate when the 1400°F (760°C) bypass interlock is in the bypass mode.

8.17.8* The operating temperature interlock and its temperature-sensing element shall not be used as the 1400°F (760°C) bypass interlock.

8.18 Electrical Heating Systems.

8.18.1 Heating Equipment Controls.

8.18.1.1* Electric heating equipment shall be equipped with a main disconnect device or with multiple devices to provide back-up circuit protection to equipment and to persons servicing the equipment.

8.18.1.2 The disconnecting device(s) required by 8.18.1.1 shall be capable of interrupting maximum available fault current as well as rated load current.

8.18.1.3 Shutdown of the heating power source shall not affect the operation of equipment such as conveyors, ventilation or recirculation fans, cooling components, and other auxiliary equipment, unless specifically designed to do so.

8.18.1.4 Resistance heaters larger than 48 amperes shall not be required to be subdivided into circuits of 48 amperes or less.

8.18.1.5* The capacity of all electrical devices used to control energy for the heating load shall be selected on the basis of continuous duty load ratings where fully equipped for the location and type of service proposed.

8.18.1.6 All controls using thermal protection or trip mechanisms shall be located or protected to preclude faulty operation due to ambient temperatures.

8.18.2* Excess Temperature Limit Interlock.

8.18.2.1 Excess temperature limit interlocks shall be installed in accordance with one of the following:

(1) An excess temperature limit interlock shall be installed and interlocked into the burner management system.
(2) Class B, Class C, or Class D furnaces shall not be required to have an excess temperature where it can be demonstrated that the maximum temperature limit specified by the furnace manufacturer cannot be exceeded.

8.18.2.2 Operation of the excess temperature limit interlock shall shut off the heating system before the oven's maximum temperature, as specified by the oven manufacturer, is exceeded.

8.18.2.3 Operation of the excess temperature limit interlock shall require manual reset before restart of the furnace or affected furnace zone.

8.18.2.4 Open circuit failure of the temperature-sensing components of the excess temperature limit interlock shall cause the same response as an excess temperature condition.

8.18.2.5* Excess temperature limit interlocks shall be equipped with temperature indication.

8.18.2.6* The temperature-sensing components of the excess temperature limit interlock shall be rated for the temperature and atmosphere to which they are exposed.

8.18.2.7* The temperature-sensing element of the excess temperature limit interlock shall be located where recommended by the oven manufacturer or designer.

Copyright 2014 National Fire Protection Association (NFPA). Licensed, by agreement, for individual use and download on October 4, 2014 to LEADER and READER for designated user PATTARAPORN SRITRAKOOL. No other reproduction or transmission in any form permitted without written permission of NFPA. For inquires or to report unauthorized use, contact licensing@nfpa.org.

8.18.2.8* The excess temperature limit interlock shall indicate its set point in temperature units that are consistent with the primary temperature-indicating controller.

8.18.2.9 The operating temperature controller and its temperature-sensing element shall not be used as the excess temperature limit controller.

8.19* Fluid-Heated Systems — Excess Temperature Limit Interlock.

8.19.1 Excess temperature limit interlocks shall be installed in accordance with one of the following:

(1) An excess temperature limit interlock shall be installed and interlocked into the burner management system.
(2) Class B, Class C, or Class D furnaces shall not be required to have an excess temperature limit interlock where it can be demonstrated that the maximum temperature limit specified by the furnace manufacturer cannot be exceeded.

8.19.2* Interrupting the supply of heat transfer fluid shall not cause damage to the remainder of the heat transfer system.

8.19.3 Operation of the excess temperature limit interlock shall shut off the heating system before the oven's maximum temperature, as specified by the oven manufacturer, is exceeded.

8.19.4 Operation of the excess temperature limit interlock shall require manual reset before the flow of heat transfer fluid is re-established.

8.19.5 Open circuit failure of the temperature-sensing components of the excess temperature limit interlock shall cause the same response as an excess temperature condition.

8.19.6* Excess temperature limit interlocks shall be equipped with temperature indication.

8.19.7* The temperature-sensing components of the excess temperature limit interlock shall be rated for the temperature and atmosphere to which they are exposed.

8.19.8* The temperature-sensing element of the excess temperature limit interlock shall be located where recommended by the oven manufacturer or designer.

8.19.9* The excess temperature limit interlock shall indicate its set point in temperature units that are consistent with the primary temperature-indicating controller.

8.19.10 The operating temperature controller and its temperature-sensing element shall not be used as the excess temperature limit interlock.

Chapter 9 Fire Protection

9.1* General. A study shall be conducted to determine the need for fixed or portable fire protection systems for ovens, furnaces, or related equipment.

9.1.1 The determination of the need for fire protection systems shall be based on a review of the fire hazards associated with the equipment.

9.1.2 Where determined to be necessary, fixed or portable fire protection systems shall be provided.

9.1.3* Written procedures shall be established outlining actions to be taken in response to an unintended fire involving an oven system.

9.2* Types of Fire Protection Systems.

9.2.1* Where automatic sprinklers are provided, they shall be installed in accordance with NFPA 13, *Standard for the Installation of Sprinkler Systems*, unless otherwise permitted by 9.2.2.

9.2.2 Where sprinklers that protect only ovens are installed and connection to a reliable fire protection water supply is not feasible, a domestic water supply connection shall be permitted to supply these sprinklers subject to the approval of the authority having jurisdiction.

9.2.3* Where water spray systems are provided, they shall be installed in accordance with NFPA 15, *Standard for Water Spray Fixed Systems for Fire Protection*.

9.2.4* Where carbon dioxide protection systems are provided, they shall be installed in accordance with NFPA 12, *Standard on Carbon Dioxide Extinguishing Systems*.

9.2.5 Where foam extinguishing systems are provided, they shall be installed in accordance with NFPA 11, *Standard for Low-, Medium-, and High-Expansion Foam*.

9.2.6* Where dry chemical protection systems are provided, they shall be installed in accordance with NFPA 17, *Standard for Dry Chemical Extinguishing Systems*.

9.2.7 Where water mist systems are provided, they shall be installed in accordance with NFPA 750, *Standard on Water Mist Fire Protection Systems*.

9.3 Special Considerations.

9.3.1 Where water from a fixed protection system could come in contact with molten materials, such as molten salt or molten metal, shielding shall be provided to prevent water from contacting the molten material.

9.3.2* Galvanized pipe shall not be used in sprinkler or water spray systems in ovens, furnaces, or related equipment.

9.3.3 Where sprinklers are selected for the protection of ovens, furnaces, or related equipment, the use of closed-head sprinkler systems shall be prohibited, and only deluge sprinkler systems shall be used where the following conditions exist:

(1) In equipment where temperatures can exceed 625°F (329°C)
(2) Where flash fire conditions can occur

9.4 Drawings and Calculations. Prior to the beginning of installation of a fixed fire protection system, installation drawings and associated calculations depicting the arrangement of fixed protection installations shall be submitted to the authority having jurisdiction for review and approval.

9.5 Means of Access. Where manual fire protection is determined to be necessary as a result of the review required in Section 9.1, doors or other effective means of access shall be provided in ovens and ductwork so that portable extinguishers and hose streams can be used effectively in all parts of the equipment.

9.6 Inspection, Testing, and Maintenance of Fire Protection Equipment. All fire protection equipment shall be inspected, tested, and maintained as specified in the following standards:

(1) NFPA 10, *Standard for Portable Fire Extinguishers*
(2) NFPA 11, *Standard for Low-, Medium-, and High-Expansion Foam*
(3) NFPA 12, *Standard on Carbon Dioxide Extinguishing Systems*
(4) NFPA 13, *Standard for the Installation of Sprinkler Systems*

Copyright 2014 National Fire Protection Association (NFPA). Licensed, by agreement, for individual use and download on October 4, 2014 to LEADER and READER for designated user PATTARAPORN SRITRAKOOL. No other reproduction or transmission in any form permitted without written permission of NFPA. For inquires or to report unauthorized use, contact licensing@nfpa.org.

(5) NFPA 15, *Standard for Water Spray Fixed Systems for Fire Protection*
(6) NFPA 17, *Standard for Dry Chemical Extinguishing Systems*
(7) NFPA 17A, *Standard for Wet Chemical Extinguishing Systems*
(8) NFPA 25, *Standard for the Inspection, Testing, and Maintenance of Water-Based Fire Protection Systems*
(9) NFPA 750, *Standard on Water Mist Fire Protection Systems*

Chapter 10 Thermal Oxidizer

10.1 General. For the purposes of this chapter, the term *thermal oxidizer* shall include the following:

(1) Afterburners
(2) Direct thermal oxidizers
(3) Direct catalytic oxidizers
(4) Fume incinerators
(5) Recuperative thermal oxidizers
(6) Recuperative catalytic oxidizers
(7) Regenerative thermal oxidizers
(8) Regenerative catalytic oxidizers
(9) Flameless thermal oxidizers
(10) Other devices that can restrict ventilation of ovens

10.2 Location and Construction.

10.2.1* The design and construction of fume incinerators shall comply with all requirements for Class A ovens in this standard, except for the requirements for explosion relief.

10.2.2 Precautions shall be taken to reduce fire hazards where the relative location of equipment or the type of fumes generated are such that combustible liquids can condense or solids can be deposited between the generating process and the afterburner.

10.2.3* Direct Fuel Injection Systems.

10.2.3.1 Two safety shutoff valves in series shall be provided in the fuel injection supply line.

10.2.3.2 A filter or fine-mesh strainer shall precede the upstream safety shutoff valve.

10.2.3.3 Safety shutoff valves shall not be used as modulating control valves unless they are designed as both safety shutoff and modulation valves and tested for concurrent use.

10.2.3.4 Means for testing all fuel safety shutoff valves for valve seat leakage shall be installed.

10.2.3.5 Local visual position indication shall be provided for each safety shutoff valve.

(A) The position indication shall directly indicate the physical position, closed and open, of the valve.

(B) Where lights are used for position indication, the absence of light shall not be used to indicate open or closed position.

(C) Indirect indication of valve position, such as by monitoring operator current voltage or pressure, shall not be permitted.

10.2.3.6 The safety shutoff valves in 10.2.3.1 shall shut off the injected fuel after interruption of the holding medium by any one of the interlocking safety devices or operating controls.

10.2.3.7 Where the introduced capacity exceeds 400,000 Btu/hr (117 kW), at least one of the safety shutoff valves in 10.2.3.1 shall be proved closed and interlocked with the pre-ignition purge interval.

(A) A proved closed condition shall be accomplished by either of the following means:

(1) A proof-of-closure switch
(2) A valve proving system

(B) Auxiliary and closed position indicator switches shall not satisfy the proved-closed requirement of 8.8.2.2.

10.3 Heating Systems. (Reserved)

10.4 Commissioning, Operations, Maintenance, Inspection, and Testing. (Reserved)

10.5 Fire Protection. (Reserved)

10.6 Safety Equipment and Application.

10.6.1* Thermal oxidizers shall not reduce the required safety ventilation specified in this standard.

10.6.2* Direct-Fired Fume Incinerators.

10.6.2.1* The design and operation of combustion systems and controls shall comply with all parts of this standard pertaining to direct-fired ovens.

10.6.2.2* An excess temperature limit interlock shall be installed to prevent uncontrolled temperature rise in the fume incinerator, and operation of the interlock shall cause the following:

(1) Interruption of fuel to the fume incinerator burner
(2) Interruption of the source of fumes to the incinerator

10.6.3 Direct Heat Recovery Systems.

10.6.3.1 Proved fresh air shall be introduced into the system to provide the oxygen necessary for combustion of hydrocarbons as well as primary burner fuel.

10.6.3.2 Fresh air shall be introduced through openings that supply air directly to each zone circulating system.

10.6.3.3* Where direct heat recovery systems are employed and portions of the incinerator exhaust gases are utilized as the heat source for one or more of the zones of the fume-generating oven, one of the following precautions shall be taken to prevent recycling unburned solvent vapors and unburned fuel.

(1) Mechanical means such as fixed dampers shall be used to ensure that the ratio of fresh air to recycled exhaust cannot reduce the destruction efficiency of the incinerator below specification or 90 percent, whichever is higher.
(2) Oxygen sensors in the air stream to the incinerator are interlocked to divert recycled exhaust gases to atmosphere if levels drop below specifications for the incinerator.
(3) A continuous vapor concentration high-limit controller is provided in accordance with 11.6.10.

10.6.4* Catalytic Fume Incinerators.

10.6.4.1 The requirements in 10.6.2 for direct-fired fume incinerators shall apply to catalytic fume incinerators.

10.6.4.2* An additional excess temperature limit interlock shall be located downstream from the discharge of the catalyst bed for thermal protection of the catalyst elements, and operation of the interlock shall cause the following:

(1) Interruption of fuel to the burner
(2) Interruption of the source of fumes

Copyright 2014 National Fire Protection Association (NFPA). Licensed, by agreement, for individual use and download on October 4, 2014 to LEADER and READER for designated user PATTARAPORN SRITRAKOOL. No other reproduction or transmission in any form permitted without written permission of NFPA. For inquires or to report unauthorized use, contact licensing@nfpa.org.

10.6.4.3* Process exhaust ventilation shall be provided to maintain vapor concentrations that cannot generate temperatures at which thermal degradation of the catalyst can occur.

10.6.4.4* A differential pressure (*P*) high limit switch, measuring across the catalyst bed, shall be used to detect particulate contamination, and operation of the switch shall cause the following:

(1) Interruption of fuel to the fume incinerator burner
(2) Interruption of the source of fumes to the incinerator

10.6.4.5* Where catalysts are utilized with direct heat recovery, a maintenance program shall be established, and frequent tests of catalyst performance shall be conducted so that unburned or partially burned vapors are not reintroduced into the process oven.

Chapter 11 Class A Ovens and Furnaces

11.1 General. (Reserved)

11.2 Location and Construction. (Reserved)

11.3 Heating Systems. (Reserved)

11.4 Commissioning, Operations, Maintenance, Inspection, and Testing.

11.4.1* Safety Design Data Form.

11.4.1.1 Solvent Atmosphere Ovens. The safety design data form or nameplate for solvent atmosphere ovens shall include all of the following design data:

(1) Solvent used
(2) Number of gallons (liters) per batch or per hour of solvent and volatiles entering the oven
(3) Required purge time
(4) Oven operating temperature
(5) Exhaust blower rating for the number of gallons (liters) of solvent per hour or batch at the maximum operating temperature

11.4.1.2 Low-Oxygen Ovens. For low-oxygen ovens, the maximum allowable oxygen concentration shall be included in place of the exhaust blower ratings.

11.4.2 On completion of an oven installation, airflow tests shall be conducted on the ventilation systems under the oven operating conditions, with flow control devices at their minimum settings.

11.4.3 The airflow tests required by 11.4.2 shall be repeated when the flammable or combustible vapor loadings are increased or when modifications are made to the ventilation system.

11.4.4* Operation and maintenance of a low-oxygen oven and its associated recovery equipment shall be performed by the user in accordance with the manufacturer's recommendations.

11.5 Fire Protection.

11.5.1 Upon activation of an oven's fire protection system, the following actions shall be initiated:

(1) Safety shutdown of the oven.
(2) Discontinue the introduction of flammable or combustible material.
(3) Position damper(s) to maintain the minimum airflow through all oven passages to provide the required safety ventilation or demonstrate by calculation that the combustible concentration in the work chamber cannot exceed 25 percent of the lower flammable limit (LFL) under any conditions.
(4) Keep fan(s) in operation to maintain the required safety ventilation or demonstrate by calculation that the combustible concentration in the work chamber cannot exceed 25 percent of the lower flammable limit (LFL) under any conditions.
(5) Shut down the recirculation air and exhaust air systems and close the damper(s) where the type of automatic fire protection system requires that ventilation be discontinued.

11.6 Safety Ventilation for Class A Ovens.

11.6.1 General Safety Ventilation Requirements.

11.6.1.1 Air circulation shall be used to minimize the volume of flammable concentration regions that are present at the point of evaporation within the oven.

11.6.1.2 Combustible solids or substrate material shall not require safety ventilation unless flammable constituents evolve in the process of heating.

11.6.1.3 The determination of safety ventilation shall be based on all of the following:

(1) Volume of products of combustion entering the oven heating chamber
(2) Weight or volume of flammable or combustible constituents released during the heating process, based on maximum loading
(3) Solvent that requires the greatest amount of ventilation air per gallon (liter) when a combination of solvents is used
(4) Design of the oven heating and ventilation system with regard to all of the following:
    (a) Materials to be processed
    (b) Temperature to which processed materials are raised
    (c) Method of heating with regard to direct or indirect venting of combustion products versus alternative use of steam or electrical energy
    (d) General design of the oven with regard to continuous or batch-type operation
    (e) Type of fuel and chemicals to be used and any by-products generated in the heating chamber

11.6.1.4* Published chemical properties shall be used where chemical manufacturer's data are not available.

11.6.1.5 Safety ventilation shall be maintained until all flammable vapors are removed or have been released from the oven and associated equipment.

11.6.1.6 Class A ovens shall be mechanically ventilated.

11.6.1.7* If reduction of safety ventilation by accumulation of deposits is possible for the oven's intended use, the fan design shall be selected to prevent this accumulation.

11.6.1.8 Class A ovens shall be ventilated directly to the outdoor atmosphere or indirectly to the outdoor atmosphere through a fume incinerator in accordance with Chapter 10 or through other approved volatile organic compound (VOC) or particulate pollution control devices.

11.6.1.9 Exhaust duct openings shall be located in the areas of greatest concentration of vapors within the oven enclosure.

Copyright 2014 National Fire Protection Association (NFPA). Licensed, by agreement, for individual use and download on October 4, 2014 to LEADER and READER for designated user PATTARAPORN SRITRAKOOL. No other reproduction or transmission in any form permitted without written permission of NFPA. For inquires or to report unauthorized use, contact licensing@nfpa.org.

11.6.1.10* Safety ventilation shall be proved by one of the following:

(1) A dedicated exhaust fan proved in accordance with Section 8.6
(2) The presence of at least the required fresh air flow into the system proven in accordance with 11.6.1.11
(3) The presence of at least the required exhaust flow out of the system proven in accordance with 11.6.1.11
(4) A continuous vapor concentration high- limit controller in accordance with 11.6.10

11.6.1.11 Safety ventilation shall be arranged to meet the following design characteristics:

(1) The reduction of air flow below the minimum required by 11.6.1 shall activate the ventilation safety devices provided in accordance with Section 8.6.
(2) The physical arrangement of dampers, fans, ducts, chambers, and passages shall ensure that a short-circuited airflow cannot occur without activating the ventilation safety devices provided in accordance with Section 8.6.

11.6.1.12 Where used, multiple exhaust fans, manifolded together, shall be designed so that the operation of one or more exhaust fans does not result in backflow to an idle oven or reduced exhaust flow due to increased manifold pressure.

11.6.1.13 Ovens in which the temperature is controlled by varying airflow shall be designed so that the air required for safety ventilation is maintained during all operating conditions.

11.6.1.14 A separate exhaust system shall be used for exhausting the products of combustion from indirect-fired heating systems or indirect-fired internal heating systems, unless otherwise permitted by 11.6.1.15.

11.6.1.15 All indirect-fired ovens shall be equipped with one of the following:

(1) Separate exhaust systems for removing the products of combustion and the process stream
(2) A single exhaust system for removing both the products of combustion and the process stream when the temperature of the products of combustion is reduced by the addition of fresh air to a point where it is insufficient to cause ignition of any combustible fumes in the oven exhaust system and with approval from the AHJ

11.6.1.16* Air supplied into the oven shall be circulated to produce a uniform distribution and movement in all parts of the oven and through the work in process.

11.6.2 Interlocks.

11.6.2.1* Interlocks for exhaust and recirculation fans shall be installed in accordance with Sections 8.6 and 8.7.

11.6.2.2 Electrical interlocks obtained through interconnection with a motor starter shall be provided for exhaust and recirculation fans.

11.6.2.3 Conveyors or sources of flammable or combustible material shall be interlocked to shut down upon the occurrence of excess temperature or if either the exhaust system or the recirculation system fails.

11.6.2.4 Where combustible materials are continuously admitted to the oven, and stopping or reducing the material flow can result in a hazardous condition, interlocks shall be provided to shut down the heating system upon stoppage or reduction of material flow.

11.6.3 Heat Recovery and Pollution Control Devices.

11.6.3.1* If the installation of heat recovery devices and pollution control devices reduces the combustion airflow or exhaust flow below that required for purge or safety ventilation, the purge flow rate or purge time shall be increased to compensate for the reduction.

11.6.3.2 Heat recovery devices and pollution control devices shall be designed and maintained to prevent reduction or loss of safety ventilation due to such factors as the condensation of flammable volatiles and foreign materials.

11.6.3.3 Heat recovery devices and pollution control devices shall be designed to minimize fire hazards due to the presence of combustible products or residue.

11.6.4 Fresh Air Supply and Exhaust.

11.6.4.1 Ovens in which flammable vapors are being produced or are combined with the products of combustion shall be exhausted.

11.6.4.2 All ovens shall have the exhaust fan motor starter and airflow switch interlocked to prevent operation of the heating units unless the exhaust fans are running.

11.6.4.3 Devices that control the volume of fresh air admitted to the oven and the vapors or gases exhausted from the oven shall be designed so that when at the minimum setting they exceed the volume required for safety ventilation.

11.6.5* Determination and Calculation of Required Safety Ventilation Corrections for Temperature and Altitude. The correction factors in 11.6.5.1 and 11.6.5.2 shall be determined and reserved for use in the subsequent calculations to determine the minimum required safety ventilation.

11.6.5.1 Temperature Correction Factors.

(A)* Temperature correction factors for volume shall be applied because the volume of gas varies in direct proportion to its absolute temperature.

(B) Volume correction factors shall be determined in accordance with one of the following equations or by using Table 11.6.5.1(B):

[11.6.5.1(B)]

$$\frac{t^{\circ}\mathrm{F}+460^{\circ}\mathrm{F}}{70^{\circ}\mathrm{F}+460^{\circ}\mathrm{F}}=\text{correction factor (U.S. customary units)}$$

$$\frac{t^{\circ}\mathrm{C}+273^{\circ}\mathrm{C}}{21^{\circ}\mathrm{C}+273^{\circ}\mathrm{C}}=\text{correction factor (SI units)}$$

where:
t = exhaust temperature

11.6.5.2 Altitude Correction Factor.

(A)* The altitude correction factors for volume in Table 11.6.5.2(A) shall be applied, unless otherwise permitted by 11.6.5.2.

(B) Correction factors shall not be required at altitudes lower than 1000 ft (305 m) above sea level.

11.6.5.3 Ventilation shall be added to ensure the removal of products of combustion in direct-fired process ovens.

Copyright 2014 National Fire Protection Association (NFPA). Licensed, by agreement, for individual use and download on October 4, 2014 to LEADER and READER for designated user PATTARAPORN SRITRAKOOL. No other reproduction or transmission in any form permitted without written permission of NFPA. For inquires or to report unauthorized use, contact licensing@nfpa.org.

Table 11.6.5.1(B) Temperature–Volume Conversion Factors (at Sea Level)

Temp.		Conv.	Temp.		Conv.	Temp.		Conv.
°F	°C	Factor	°F	°C	Factor	°F	°C	Factor
70	21	1	300	149	1.43	950	510	2.66
100	38	1.06	350	177	1.53	1000	538	2.75
110	43	1.075	400	204	1.62	1050	566	2.85
120	49	1.09	450	232	1.72	1100	593	2.94
130	54	1.11	500	260	1.81	1150	621	3.04
140	60	1.13	550	288	1.90	1200	649	3.13
150	66	1.15	600	316	2.00	1250	677	3.23
175	79	1.20	650	343	2.09	1300	704	3.32
200	93	1.24	700	371	2.19	1350	732	3.42
225	107	1.29	750	399	2.28	1400	760	3.51
250	121	1.34	850	454	2.47			
275	135	1.38	900	482	2.57			

Table 11.6.5.2(A) Altitude Correction Factors

Altitude		Correction
ft	m	Factor
0	0	1.00
1,000	305	1.04
2,000	610	1.08
3,000	915	1.12
4,000	1,220	1.16
5,000	1,524	1.20
6,000	1,829	1.25
7,000	2,134	1.30
8,000	2,438	1.35
9,000	2,743	1.40
10,000	3,048	1.45

11.6.6 Method for Calculating Ventilation Rate for Products of Combustion.

11.6.6.1 The method for calculating the ventilation rate for products of combustion shall be as follows:

(1) The minimum oven exhaust volume for safety ventilation in continuous process ovens, including powder coating ovens, where a direct-fired combustion system (within or remote from the oven chamber) is used shall include the volume of combustion products from burners.
(2) The value used for the products of combustion shall be 183 scfm (5.18 standard m^3/min) per 1,000,000 Btu/hr (293.1 kW) burner rating.
(3) The products of combustion shall be adjusted for the oven operating temperature and the altitude.
(4) The adjusted value shall be added to the value determined from 11.6.8.4.

11.6.6.2 The products of combustion ventilation value determined in 11.6.6.1 shall be corrected for the exhaust stream temperature and the altitude to determine the actual flow as follows:

(1) Apply the temperature correction factor from 11.6.5.1.
(2) Apply the altitude correction factor from 11.6.5.2.

11.6.7* Method for Calculating Ventilation Rate for Powder Curing Ovens. The method for calculating the minimum ventilation rate for powder curing ovens shall be as follows:

(1) The safety ventilation required for powder curing ovens shall be based on the percentage of volatile content of the powder released (R) during the oven cure cycle. If a percentage is not available, the safety ventilation shall be calculated by assuming that 9 percent of the mass of the powder is volatile and the remaining mass is inert.
(2) The safety ventilation shall then be determined by treating the volatile components released as xylene in accordance with 11.6.8.4 for continuous process ovens and with 11.6.9.3 for batch process ovens.

11.6.8* Continuous Process Ovens.

11.6.8.1* Rate of Solvent Vapor Ventilation. The safety ventilation rate of continuous process ovens shall be designed, maintained, and operated to do either of the following:

(1) Prevent the vapor concentration in the oven exhaust from exceeding 25 percent of the LFL
(2) Where a continuous solvent vapor indicator and controller is provided in accordance with 11.6.10, prevent the vapor concentration in the oven exhaust from exceeding 50 percent of the LFL

11.6.8.2 Where a continuous solvent vapor indicator and controller is provided, it shall be arranged to do one of the following to prevent the vapor concentration in the oven exhaust from exceeding 50 percent of the LFL:

(1) Alarm and shut down the oven heating systems
(2) Alarm and operate additional exhaust fans
(3) Alarm and shut down the solvent input to the oven

11.6.8.3* LFL Correction Factor.

(A) The LFL value for continuous process ovens shall be corrected for the oven operating temperature in accordance with one of the following formulas or by using Table 11.6.8.3(A):

[11.6.8.3(A)]

$$LFL_t = LFL_{77°F}\ [1 - 0.000436\ (t°F - 77°F)]$$

$$LFL_t = LFL_{25°C}\ [1 - 0.000784\ (t°C - 25°C)]$$

where:
t = oven temperature

Copyright 2014 National Fire Protection Association (NFPA). Licensed, by agreement, for individual use and download on October 4, 2014 to LEADER and READER for designated user PATTARAPORN SRITRAKOOL. No other reproduction or transmission in any form permitted without written permission of NFPA. For inquires or to report unauthorized use, contact licensing@nfpa.org.

Table 11.6.8.3(A) Oven Temperature Correction Factors

Oven Temperature		LFL Correction Factor
°F	°C	
77	25	1.00
212	100	0.94
300	149	0.90
400	204	0.86
500	260	0.81

(B) For batch process ovens, the temperature multiplier specified in 11.6.9.2 shall be used.

11.6.8.4* Methods for Determining Solvent Safety Ventilation Rate.

(A) Method A shall be calculated as follows:

(1) Determine the volume (ft^3 or m^3) of vapor per amount of solvent by using one of the following equations:

[11.6.8.4(A)a]

$$\frac{ft^3 \text{ vapor}}{\text{gal solvent}} = \left(\frac{8.328}{0.075}\right)\left(\frac{SpGr}{VD}\right)$$

$$\frac{m^3 \text{ vapor}}{\text{L solvent}} = \left(\frac{0.998}{1.200}\right)\left(\frac{SpGr}{VD}\right)$$

where:
1 gal water = 8.328 lb at 70°F
Dry air at 70°F = 0.075 lb/ft^3 and 29.9 in. Hg
SpGr = specific gravity of solvent (water = 1.0)
VD = vapor density of solvent vapor (air = 1.0)
1 L water = 0.998 kg at 21°C
Dry air at 21°C = 1200 kg/m^3 and 0.76 m Hg

(2) Determine the volume of barely explosive mixture per amount of solvent using one of the following equations:

[11.6.8.4(A)b]

$$\frac{ft^3 \text{ barely explosive mixture}}{\text{gal solvent}} = \left(\frac{ft^3}{\text{gal solvent}}\right)\left(\frac{100}{LFL_T}\right)$$

$$\frac{m^3 \text{ barely explosive vapor}}{\text{L solvent}} = \left(\frac{m^3}{\text{L solvent}}\right)\left(\frac{100}{LFL_T}\right)$$

where:
LFL_T = lower flammable limit (percentage by volume in air), corrected for temperature

(3) Determine the volume of diluted mixture at 25 percent LFL per amount (gal or L) of solvent evaporated in the process using one of the following equations:

[11.6.8.4(A)c]

$$\frac{ft^3 \text{ diluted mixture @ 25\% } LFL}{\text{gal solvent evaporated}} = 4\left(\frac{ft^3 \text{ barely explosive mixture}}{\text{gal solvent evaporated}}\right)$$

$$\frac{m^3 \text{ diluted mixture @ 25\% } LFL}{\text{L solvent evaporated}} = 4\left(\frac{m^3 \text{ barely explosive mixture}}{\text{L solvent evaporated}}\right)$$

(B) Method B shall be calculated by determining the volume of vapor per amount of solvent using one of the following equations:

[11.6.8.4(B)a]

$$\frac{ft^3 \text{ diluted mixture @ 25\% } LFL}{\text{gal solvent evaporated}} = 4\left(\frac{8.329}{0.075}\right)\left(\frac{SpGr}{VD}\right)\left(\frac{100}{LFL_T}\right)$$

[11.6.8.4(B)b]

$$\frac{m^3 \text{ diluted mixture @ 25\% } LFL}{\text{L solvent evaporated}} = 4\left(\frac{0.998}{1.200}\right)\left(\frac{SpGr}{VD}\right)\left(\frac{100}{LFL_T}\right)$$

(C)* Method for Estimating Solvent Safety Ventilation Rate. Continuous process ovens shall have a rate of safety ventilation for volatile materials of 12,000 ft^3 (340 m^3) of fresh air referred to 70°F (21°C) (at sea level) per 1 gal (3.8 L) of solvent evaporated in the oven, where all the following conditions are met:

(1) The elevation is below 1000 ft (305 m).
(2) The oven operating temperature is at or below 350°F (177°C).
(3) The volume of air that dilutes the vapor from 1 gal of solvent to the lower flammable limit (LFL) rendered barely flammable for the solvent used is less than 2640 scf/gal (19.75 standard m^3/L).
(4) The rate of safety ventilation is corrected for the temperature of the exhaust stream exiting the oven.

11.6.8.5* The required minimum rate of exhaust air flow, at standard atmosphere and temperature, shall be determined by multiplying the cubic feet of diluted mixture at 25 percent LFL per gallon of solvent evaporated in the process by the maximum allowable gallons per minute of solvent entering the process oven, as follows:

[11.6.8.5]

$$\left(\begin{array}{c}ft^3 \text{ or } m^3 \text{ of exhaust to} \\ \text{prove safety ventilation}\end{array}\right) = \left(\frac{\begin{array}{c}\text{gal or L of solvent} \\ \text{entering the oven}\end{array}}{\text{min}}\right)\left(\frac{ft^3 \text{ or } m^3 \text{ diluted mixture @ 25\% } LFL_T}{\text{gal or L of solvent evaporated}}\right)$$

11.6.8.6 The safety ventilation value determined in 11.6.8.4 shall be corrected for the exhaust stream temperature and altitude to determine the actual flow, as follows:

(1) Apply the temperature correction factor from 11.6.5.1.
(2) Apply the altitude correction factor from 11.6.5.2.

11.6.8.7 The products of combustion in direct-fired process ovens shall be accounted for by implementing one of the following approaches:

(1) The safety ventilation shall be increased to include the products of combustion ventilation rate determined in 11.6.6.
(2) A continuous vapor concentration high-limit controller shall be provided in accordance with 11.6.10.

11.6.9* Batch Process Ovens.

11.6.9.1* Solvent Vapor Ventilation. The rate of solvent vapor ventilation (safety ventilation) shall be calculated and provided to ensure that the maximum solvent vapor concentration cannot exceed 25 percent of the LFL during operation.

Copyright 2014 National Fire Protection Association (NFPA). Licensed, by agreement, for individual use and download on October 4, 2014 to LEADER and READER for designated user PATTARAPORN SRITRAKOOL. No other reproduction or transmission in any form permitted without written permission of NFPA. For inquires or to report unauthorized use, contact licensing@nfpa.org.

11.6.9.2 Ventilation LFL Correction Factor. A ventilation correction factor shall be determined to adjust for the impact of temperature on the LFL value for batch process ovens as follows:

(1) Batch ovens operating at temperatures from 250°F to 500°F (121°C to 260°C) shall have the volume increased by a multiplier of 1.4.
(2) Batch ovens operating above 500°F (260°C) shall have the volume of air increased by a multiplier determined by test.

11.6.9.3* Methods for Determining Solvent Safety Ventilation Rate. In batch process ovens, the rate of safety ventilation air shall be either calculated using 11.6.9.3 or estimated using 11.6.9.3.

(A) Method for Calculating Ventilation Rate. The minimum safety ventilation rate shall be one of the following:

(1) 440 scfm of air per gal (3.29 standard m^3/min of air per L) of solvent
(2) Other than 440 scfm (3.29 standard m^3/min) where ventilation is provided, with exhaust fans and other devices to prevent average concentration in the oven from exceeding 25 percent of the LFL
(3) A continuous vapor concentration high limit controller meeting one of the following criteria:
    (a) The controller is arranged to alarm and shut down the oven heating system.
    (b) The controller is arranged to operate additional exhaust fans at a predetermined vapor concentration not exceeding 50 percent of the LFL. The amount of ventilation air in standard cubic feet (standard cubic meters) that is rendered barely flammable by the vapor generated in gallons per hour (liters per hour) of solvent in use is determined, and the determined value then is multiplied by an empirical factor of 10 and divided by 60 minutes/hour to obtain the safety ventilation in standard cubic feet per minute (standard cubic meters per minute).

(B) Method for Estimating Rate of Ventilation. Batch ovens shall have a minimum safety ventilation rate either of that given in 11.6.9.3 or as follows:

(1) The safety ventilation rate of batch ovens shall be designed and maintained to provide 440 scfm of air per gal (3.29 standard m^3/min of air per L) of flammable volatiles in each batch.
(2) *Where the solvent used requires a volume of air greater than 2640 standard ft^3 to dilute vapor from 1 gal of solvent to the LFL (19.75 standard m^3/L), safety ventilation shall be adjusted in proportion to the ratio of the actual volume of air necessary to render 2640 ft^3/gal (19.75 m^3/L) barely explosive.

CAUTION: Caution shall be used where applying this method to products of low mass that can heat up quickly (such as paper or textiles) or materials coated with very highly volatile solvents. Either condition can produce too high a peak evaporation rate for this method to be used.

11.6.9.4* Correction factors shall be applied as follows:

(1) The temperature correction factor determined in 11.6.5.1 shall be applied to adjust for the impact of temperature on exhaust efficiency.
(2) The altitude correction factor determined in 11.6.5.2 shall be applied to adjust for the impact of temperature on exhaust efficiency.
(3) The temperature correction factor determined in 11.6.9.2 shall be applied to adjust for the impact of temperature on the LFL.

11.6.10 Continuous Vapor Concentration High Limits and Controllers.

11.6.10.1 Where the safety ventilation rate in the oven has been designed to provide vapor concentrations between 25 percent and 50 percent of the LFL, a continuous vapor concentration high limit controller shall be provided.

11.6.10.2* The continuous vapor concentration high limit controller shall be capable of detecting and responding to process upset conditions to initiate reduction of the vapor concentration before the concentration exceeds 50 percent of the LFL.

11.6.10.3* Where an oven having multiple heating zones and at least one heating zone is operating at or above 25 percent of the LFL, all other heating zones shall be equipped with either of the following:

(1) A continuous vapor concentration high limit controller
(2) Without a continuous vapor concentration high limit controller where it can be demonstrated that a heating zone cannot exceed 25 percent of the LFL in the case of an accidental increase in solvent input

11.6.10.4* Where a continuous vapor concentration controller is used to modulate the flow of fresh air or exhaust from an oven or zone, the following criteria shall apply:

(1) A secondary protection system shall be required to prevent an analyzer failure from causing a hazardous condition.
(2) The secondary protection system shall have a separate continuous vapor concentration high limit controller for each zone.
(3) Limits on damper travel (set for 50 percent LFL for the highest design solvent input) for each zone shall be permitted in lieu of the requirement of 11.6.10.3(2).

11.6.10.5 The continuous vapor concentration controller and the continuous vapor concentration high limit controller shall be calibrated for the application and solvents used.

11.6.10.6 Where a variety of solvents is used, the solvent to which the controller is least sensitive shall be the primary calibration reference.

11.6.10.7 A record of primary and subsequent calibrations shall be maintained and reviewed for drift in the controller response.

11.6.10.8 Alarms shall be provided to indicate any sample, flow, circuit, or controller power failures.

(A) Activation of an alarm shall initiate action to reduce the solvent concentration to a minimum.

(B) The activation of the malfunction alarm shall require operator intervention in accordance with 11.6.10.10.

11.6.10.9* Activation of the continuous vapor concentration high limit controller shall alarm and initiate the automatic reduction of the solvent concentration to a minimum.

11.6.10.10 When the continuous vapor concentration high limit controller alarm (required by 11.6.10.9) is activated, the

Copyright 2014 National Fire Protection Association (NFPA). Licensed, by agreement, for individual use and download on October 4, 2014 to LEADER and READER for designated user PATTARAPORN SRITRAKOOL. No other reproduction or transmission in any form permitted without written permission of NFPA. For inquires or to report unauthorized use, contact licensing@nfpa.org.

process shall be prevented from restarting until the vapor concentration is below the limit level and the operator has manually reset the system.

11.6.10.11 Continuous vapor alarms shall be calibrated and maintained in accordance with the following:

(1) The sensor and the sample system shall be maintained at a temperature that prevents condensation, and sampling lines shall be clean and airtight.
(2) The system shall be secured against unauthorized adjustment.
(3) Maintenance shall be performed in accordance with manufacturer's instructions.
(4) Calibration shall be performed in accordance with manufacturer's instructions and shall be performed at least once per month.

11.7 Low-Oxygen Atmosphere Class A Ovens with Solvent Recovery.

11.7.1 General.

11.7.1.1 In low-oxygen atmosphere Class A ovens with solvent recovery limiting oxygen concentration, oxygen concentration shall be maintained by the addition of inert gas.

11.7.1.2* The equipment, including fans and web seals, shall be gastight to avoid admission of air.

11.7.2* An oxygen analyzer and controller shall be installed to limit oxygen concentration to below the value where no mixture is flammable (limiting oxidant concentration) by increasing the flow of inert gas or reducing flammables into the oven.

11.7.2.1 During startup and shutdown, sufficient inert gas flow shall be provided to be outside the flammable region.

11.7.2.2* Solvent shall be recovered and sent to a solvent storage system.

11.7.3 Oven Design. The oven shall be designed to accommodate the performance of the following procedures for system operation:

(1) Operational procedures to avoid flammable region of the solvent at all times
(2) Starting and purging of the oven with inert gas to lower the oxygen content to a predetermined level
(3) Heating of the recirculating oven atmosphere to the required process temperature
(4) Introduction of the workload into the oven enclosure
(5) Continuous operation
(6) Shutdown procedures to avoid the flammable region of the solvent
(7) Emergency shutdown procedures

11.7.4 Oven Construction and Location. The following requirements shall be met:

(1) Explosion relief shall not be required for low-oxygen atmosphere Class A ovens with solvent recovery.
(2) The oven enclosure and any ductwork to and from the enclosure shall be gastight, and access doors shall meet the following criteria:
    (a) They shall be gasketed to minimize leakage.
    (b) They shall be designed to prevent opening during operation.
(3)* The oven and the oven end openings shall be designed to minimize the entrance of air and the exit of solvent vapors.
(4) The oven atmosphere circulation system shall be designed to provide sufficient flow throughout the entire oven and the ductwork system to minimize condensation of the flammable solvent.

11.7.5* Inert Gas Generation and Storage Systems. The oven system shall have an inert gas supply for oxygen control and purging.

11.7.5.1 Inert gas for reduction and control of oxygen within the oven enclosure and associated equipment shall be nitrogen, carbon dioxide, or other inert gas.

11.7.5.2 Vessels, controls, and piping that maintain their integrity at the maximum/minimum design pressures and temperatures shall be provided.

11.7.5.3 ASME tank relief devices shall be provided and sized, constructed, and tested in accordance with ASME *Boiler and Pressure Vessel Code*, Section VIII, Division 1.

11.7.5.4 Bulk storage systems shall be rated and installed to ensure reliable and uninterrupted flow of inert gas to the user equipment as necessary.

11.7.5.5 Where inert gases are used as safety purge media, the following criteria shall be met:

(1) The minimum volume stored is sufficient to purge all connected low-oxygen atmosphere ovens with a minimum of five oven volumes *(see 11.7.6.1)*, unless otherwise permitted by 11.7.6.2.
(2) The recirculating fans are kept operating during the purge.

11.7.5.6 The stored volume shall be permitted to be reduced, provided that both of the following conditions are met:

(1) Mixing is adequate.
(2) The stored volume is sufficient to reduce the concentration in the oven to the LFL in air.

11.7.6 Vaporizers Used for Liquefied Purging Fluids.

11.7.6.1 Vaporizers utilized to convert cryogenic fluids to the gas state shall be ambient air-heated units so that their flow is unaffected by a loss of power, unless otherwise permitted by 11.7.6.2.

11.7.6.2 Where powered vaporizers are used, one of the following conditions shall be met:

(1) The vaporizer has a reserve heating capacity sufficient to continue vaporizing at least five oven volumes at the required purge flow rate following power interruption.
(2) Reserve ambient vaporizers are piped to the source of supply and meet the following criteria:
    (a) The vaporizers are not affected by a freeze-up or flow stoppage of gas from the power vaporizer.
    (b) The vaporizers are capable of evaporating at least five oven volumes at the required purge flow rate.
(3) Purge gas is available from an alternative source that fulfills the requirements of 11.7.5.4, 11.7.5.5, 11.7.6.3, and 11.7.6.6.

11.7.6.3 Vaporizers shall be rated by the industrial gas supplier or the owner to vaporize at 150 percent of the highest purge gas demand for all connected equipment.

11.7.6.4 Winter temperature extremes in the locale shall be taken into consideration by the agency responsible for rating the vaporizers specified in 11.7.6.3.

Copyright 2014 National Fire Protection Association (NFPA). Licensed, by agreement, for individual use and download on October 4, 2014 to LEADER and READER for designated user PATTARAPORN SRITRAKOOL. No other reproduction or transmission in any form permitted without written permission of NFPA. For inquires or to report unauthorized use, contact licensing@nfpa.org.

11.7.6.5 It shall be the user's responsibility to inform the industrial gas supplier of additions to the plant that materially increase the inert gas consumption rate, so that vaporizer and storage capacity can be enlarged in advance of plant expansion.

11.7.6.6* The vaporizer shall be protected against flow demands that exceed its rate of capacity when such demands can cause closure of a low-temperature shutoff valve.

11.7.6.7 A temperature indicator shall be installed in the vaporizer effluent piping.

11.7.6.8 An audible or visual low-temperature alarm shall be provided to alert oven operators whenever the temperature is in danger of reaching the set point of the low-temperature flow shutoff valve so that they can begin corrective actions in advance of the flow stoppage.

11.7.7 Inert Gas Flow Rates.

11.7.7.1* Inert gas shall be provided to dilute air infiltration to prevent the creation of a flammable gas–air mixture within the oven.

11.7.7.2 Means shall be provided for metering and controlling the flow rate of the inert gas.

11.7.7.3 The flow control shall be accessible and located in an illuminated area or illuminated so that an operator can monitor its operation.

11.7.7.4 Where an inert gas flow control unit is equipped with an automatic emergency inert purge, a manually operated switch located on the face of the unit and a remote switch that activates the purge shall be provided.

11.7.7.5 The pressure of the inert gas system shall be regulated to prevent overpressurizing of components in the system, such as glass tube flowmeters.

11.7.8 Inert Gas Piping System.

11.7.8.1 The piping system for inert gas shall be sized to allow the full flow of inert gas to all connected ovens at the maximum demand rates.

11.7.8.2 Solders that contain lead shall not be used to join pipes.

11.7.8.3* Piping that contains cryogenic liquids or that is installed downstream of a cryogenic gas vaporizer shall be constructed of metals that retain strength at cryogenic temperatures.

11.7.8.4 Piping and piping components shall be in accordance with ASME B31.3, *Process Piping*.

11.7.9 Safety Equipment and Application.

11.7.9.1* The oven shall be analyzed continuously and controlled for oxygen content by modulating the addition of inert gas.

(A) The sample point shall be in the condensing system for each zone or multiple zones.

(B) The oven shall have a minimum of two analyzers to provide redundancy.

11.7.9.2 Provision shall be made for power outages by one of the following:

(1) An emergency standby power generator is provided for emergency shutdown during a power failure.
(2) Alternative safety shutdown procedures for power failure are employed.

11.7.9.3* Provisions shall be made to restrict entry into the oven where the atmosphere could be hazardous to human health.

11.7.10 Inert Gas Introduction and Starting the Production Line. The following procedures shall be accomplished for inert gas introduction and starting the production line:

(1) Verifying that all personnel are out of the oven enclosure, all guards are in place, and all doors are closed
(2) Verifying that the volume of inert gas is in storage and that the inert gas supply and solvent recovery systems are operational and ready to start production
(3) Verifying that the solvent recovery system interfaced with the oven is operational and prepared to receive solvent-laden gas prior to starting production
(4) Starting the recirculation fans in the oven enclosure prior to introduction of inert gas to ensure that effective oxygen purging occurs once inert gas enters the enclosure
(5)*Purging the oven enclosure with inert gas until the enclosure oxygen concentration is three percentage points below the limiting oxidant concentration (LOC) that is able to support combustion of the solvents used
(6) Heating the recirculating oven gas to the required operating temperature

11.7.11* Production Running.

11.7.11.1 The oven enclosure oxygen concentration shall be maintained at least three percentage points below the LOC of the solvent during normal operation.

11.7.11.2 If it is not possible to maintain the oxygen concentration at least one percentage point below the LOC, the emergency purge shall be activated, and the solvent input shall be stopped.

11.7.11.3 If the oven temperature is not above the solvent dew point, the oven shall be purged and shut down, and corrective action shall be taken.

11.7.12 Oven Shutdown and Entry. When an oven is shut down and it is necessary to enter, the following steps shall be taken:

(1)*Flow to and from the solvent recovery system shall be continued, and the system shall be purged with inert gas until the solvent vapor concentration in the oven enclosure is no greater than the solvent concentration at the LOC.
(2) Flow to and from the solvent recovery system shall be discontinued, and oven heaters shall be de-energized.
(3) Air shall be introduced into the oven enclosure until the oxygen level reaches a minimum of 19.5 percent.

11.7.13 Emergency Procedures.

11.7.13.1 In the event of electrical power failure, the equipment or procedures required by 11.7.13.2 shall be operated.

11.7.13.2 The oven shall shut down automatically when the emergency purge cycle is initiated.

11.7.13.3 The oxygen analyzer that initiates the emergency purge cycle shall be hard-wired to bypass all other process control instrumentation.

Copyright 2014 National Fire Protection Association (NFPA). Licensed, by agreement, for individual use and download on October 4, 2014 to LEADER and READER for designated user PATTARAPORN SRITRAKOOL. No other reproduction or transmission in any form permitted without written permission of NFPA. For inquires or to report unauthorized use, contact licensing@nfpa.org.

11.7.13.4 The oven enclosure shall have a vent line that does the following:

(1) Opens automatically when the emergency purge cycle is initiated, to avoid pressurizing the oven enclosure
(2) Discharges to an approved location away from building makeup air and ignition sources

Chapter 12 Class B Ovens and Furnaces

12.1 General. (Reserved)

12.2 Location and Construction. (Reserved)

12.3 Heating Systems. (Reserved)

12.4 Commissioning, Operations, Maintenance, Inspection, and Testing. (Reserved)

12.5 Safety Equipment.

12.5.1* Ventilation of Class B Ovens and Furnaces. Where the installation of heat recovery devices and pollution control devices reduce the combustion airflow or exhaust flow below that required for purge, the purge flow rate or purge time shall be increased to compensate for the reduction.

12.6 Fire Protection. (Reserved)

Chapter 13 Special Atmospheres for Class C Ovens and Furnaces

13.1 General. (Reserved)

13.2 Location and Construction. (Reserved)

13.3 Heating Systems. (Reserved)

13.4 Commissioning, Operations, Maintenance, Inspection, and Testing. (Reserved)

13.5 Safety Equipment.

13.5.1 Requirements for Special Atmospheres.

13.5.1.1 Subsection 13.5.1 shall apply to the equipment used to generate or to store special atmospheres and to meter or control their flows to atmosphere furnaces.

(A) Subsection 13.5.1 shall also apply to generated and synthetic special atmospheres.

(B) All the requirements in this standard for furnace heating systems shall apply to generator heating systems, unless otherwise specified in this section.

13.5.1.2 The selection and operation of the equipment used to produce or store special atmospheres shall be the responsibility of the user and shall be subject to the authority having jurisdiction.

13.5.1.3* Unwanted, normal operating, and emergency releases of fluids (gases or liquids) from special atmosphere generators, storage tanks, gas cylinders, and flow control units shall be disposed of to an approved location.

13.5.1.4 Venting of unwanted flammable atmosphere gas shall be done by controlled venting to an approved location outside the building or by completely burning the atmosphere gas and venting the products of combustion to an approved location.

13.5.1.5 Nonflammable and nontoxic gasses shall be vented to an approved location outside the building at a rate that does not pose a hazard of asphyxiation.

13.5.1.6 Water-cooled atmosphere generators shall be provided with valves on the cooling water inlet.

(A) Piping shall be arranged to ensure that equipment jackets are maintained full of water.

(B) Closed cooling water systems shall comply with 5.2.10.

(C) Open cooling water systems shall comply with 5.2.11.

13.5.2* Exothermic Generators.

13.5.2.1* Use of Copper Copper and copper alloy components or materials shall not be used in exothermic atmosphere gas generators, cooling systems, heat exchangers, and distribution systems where they will be exposed to makeup, reacting, or final product exothermic atmosphere gas.

13.5.2.2 Protective Equipment.

(A) Protective equipment shall be selected and applied separately for the fuel gas and air, and interlocks shall be provided.

(B) The protective devices shall shut down the system and shall require manual resetting after any utility (fuel gas, air, power) failure or mechanical failure.

(C) Observation ports or other visual means shall be provided to observe the operation of individual burners.

(D) The required protective equipment shall include the following:

(1) Air supply or mechanical mixer shutoff in the event of loss of fuel gas for any reason
(2) A device that shuts off the air from a remote supply in case of power failure or abnormally low or abnormally high fuel gas pressure at the generator
(3) Flow indicators, meters, or differential pressure devices on the fuel gas and air supply piping, or a test burner with flashback protection in the air–gas mixture line, to aid a trained operator in checking the air–gas ratio
(4) A visual and audible alarm when the safety shutoff valve is closed

(E) Exothermic generators shall stop the combustion air supply when the fuel supply is stopped.

13.5.3* Endothermic Generators — Protective Equipment.

13.5.3.1 Protective equipment shall be selected and installed separately for the reaction gas and the fuel gas.

13.5.3.2 Where a common gas supply for both the reaction and the fuel gases is used, the same high gas pressure switch shall be permitted to serve both.

13.5.3.3 The protective equipment shall shut down the system, which shall require manual resetting after any utility (fuel gas, fuel air, power) failure or mechanical failure.

13.5.3.4 Observation ports shall be provided to allow viewing of burner operation under all firing conditions.

Copyright 2014 National Fire Protection Association (NFPA). Licensed, by agreement, for individual use and download on October 4, 2014 to LEADER and READER for designated user PATTARAPORN SRITRAKOOL. No other reproduction or transmission in any form permitted without written permission of NFPA. For inquires or to report unauthorized use, contact licensing@nfpa.org.

13.5.3.5* Protective equipment for the reaction section of endothermic generators shall include the following:

(1) Safety shutoff valve(s) in the reaction gas supply piping requiring manual operation for opening shall close under any of the following conditions:
   (a) Low reaction gas pressure
   (b) High reaction gas pressure
   (c) Loss of reaction air supply
   (d) Low generator temperature
   (e) Power failure
(2) A low pressure switch in the reaction gas supply piping shall close the safety shutoff valve and shut off the reaction air supply in case of abnormally low reaction gas pressure at the mixer.
(3) Where the system is subject to abnormally high reaction gas pressure, a high pressure switch shall be installed in the reaction gas supply piping that operates as follows when the gas reaction pressure exceeds a predetermined upper value:
   (a) The device closes the safety shutoff valve.
   (b) The device shuts off the reaction air supply.
(4) When an air blower or compressed air line is used to supply the reaction, a low pressure switch in the reaction air supply piping shall close the safety shutoff valve and shut off the reaction air supply in case of abnormally low reaction air pressure.
(5) A device that shuts off reaction air in case of power failure or abnormally low or abnormally high reaction gas pressure at the mixer shall be included.
(6) A means for making tightness checks of all reaction gas safety shutoff valves shall be included.
(7) A valve shall be designated the main shutoff valve and shall be located upstream of the safety shutoff valve and shall be accessible for normal and emergency shutdown.
(8) A generator temperature control to prevent the flow of reaction air and reaction gas unless the generator is at the minimum generator temperature specified by the generator manufacturer shall be included.
(9) Automatic fire check protection shall be included.
(10) A visual and audible alarm when the reaction gas safety shutoff valve is closed shall be included.

13.5.3.6 Visual and audible alarms shall be provided to indicate when the heating system is shut down.

13.5.3.7 Sections 8.5 and 8.10 shall not apply to the heating systems of endothermic gas generators.

13.5.4* Ammonia Dissociators.

13.5.4.1 Construction.

(A) Ammonia dissociators shall be designed and constructed to withstand the maximum attainable pressure.

(B) All equipment, components, valves, fittings, and other related items shall be chemically compatible with ammonia.

(C) Use of brass or other copper alloy components in contact with ammonia or dissociated ammonia shall be prohibited.

13.5.4.2 Protective Equipment.

(A)* Protective equipment for the dissociation vessel shall include the following:

(1) A relief valve in the high pressure ammonia supply line, upstream of the pressure-reducing regulator, vented to an approved location, and meeting the following criteria:
   (a) Relief shall be set at 100 percent of the design pressure of the ammonia supply manifold.
   (b) The relief devices provided shall be sized, constructed, and tested in accordance with the ASME *Boiler and Pressure Vessel Code*, Section VIII.
(2) A relief valve in the low pressure ammonia line, located between the high pressure–reducing regulator and the dissociation vessel, that is vented to an approved location and meeting the following criteria:
   (a) Relief shall be set at 100 percent of the design pressure of the dissociation vessel.
   (b) The relief devices provided shall be sized, constructed, and tested in accordance with the ASME *Boiler and Pressure Vessel Code*, Section VIII, Division 1.
(3) A manual shutoff valve between the pressure-reducing regulator and the dissociator that is accessible to the operator for emergency and normal shutdown
(4) Generator temperature control to prevent flow of ammonia unless the dissociation vessel is at operating temperature, with minimum dissociation vessel temperature specified by the ammonia dissociator manufacturer
(5) A safety shutoff valve in the ammonia supply line to the generator located downstream of the manual shutoff valve and arranged to close automatically when abnormal conditions of pressure and temperature are encountered
(6) A visual and audible alarm that is initiated when the ammonia supply safety shutoff valve is closed

(B) Protective equipment for the dissociator heating system shall conform to the requirements for endothermic generators as specified in 13.5.3.

13.5.5* Bulk Storage and Generated Supply Systems for Special Atmospheres.

13.5.5.1 General.

(A) Piping and piping components shall be in accordance with ASME B31.3, *Process Piping*.

(B) Locations for tanks and cylinders containing flammable or toxic fluids shall comply with the applicable NFPA standards.

(C) Storage tanks and their associated piping and controls shall comply with the following standards:

(1) Liquefied petroleum gas systems shall be in accordance with NFPA 58, *Liquefied Petroleum Gas Code*.
(2) Fuel gas systems shall be in accordance with NFPA 54, *National Fuel Gas Code*.
(3) Hydrogen storage systems shall be in accordance with NFPA 55, *Compressed Gases and Cryogenic Fluids Code*.
(4)*Flammable or combustible liquid systems shall be in accordance with NFPA 30, *Flammable and Combustible Liquids Code*.

(D) Where inert purge gas is required by this standard, the following shall apply:

(1) It shall be available at all times and be sufficient for five volume changes of all connected atmosphere furnaces.
(2) If the inert gas has a flammable gas component, it shall be analyzed on a continuous basis to verify that the oxygen content is less than 1 percent and the combined combustible gas concentration remains less than 25 percent of the LFL.

(E) Bulk storage systems shall be rated and installed to provide the required flow of special atmospheres to the user

Copyright 2014 National Fire Protection Association (NFPA). Licensed, by agreement, for individual use and download on October 4, 2014 to LEADER and READER for designated user PATTARAPORN SRITRAKOOL. No other reproduction or transmission in any form permitted without written permission of NFPA. For inquires or to report unauthorized use, contact licensing@nfpa.org.

equipment if an interruption of the flow can create an explosion hazard.

(F) Where inert gases are used as safety purge media, the minimum volume stored shall be the amount required to purge all connected special atmosphere furnaces with at least five furnace volume changes wherever the flammable atmospheres are being used.

13.5.5.2 Storage Systems for Special Atmospheres. Tanks containing purge media shall be provided with a low-level audible and visual alarm that meets the following criteria:

(1) The alarm is situated in the area normally occupied by furnace operators.
(2) The low-level alarm set point is established to provide time for an orderly shutdown of the affected furnace(s).
(3) The minimum contents of a tank containing a purge medium at the low-level alarm set point is sufficient to purge all connected atmosphere furnaces with at least five volume changes.

13.5.6* Special Processing Gas Atmosphere Gas Mixing Systems. Where gas mixing systems that incorporate a surge tank mixing scheme that cycles between upper and lower set pressure limits, the following shall apply:

(1)*Pipes feeding gas atmosphere mixing systems shall contain manual isolation valves.
(2) The effluents from the relief devices used to protect a gas atmosphere mixing system shall be piped to an approved location.
(3) Piping and components shall be in accordance with ASME B31.3, *Process Piping*.
(4) The use of liquids shall not be permitted in gas atmosphere mixing systems.
(5) Means shall be provided for metering and controlling the flow rates of all gases.
(6) Flow control of the blended atmosphere gas shall be in compliance with each furnace's applicable special atmosphere flow requirements and protective equipment.
(7) Atmosphere gas mixers that create nonflammable or indeterminate gas mixtures shall be provided with the following:
  (a) Gas analyzers or other equipment for continuously monitoring and displaying the flammable gas composition
  (b) Automatic controls to shut off the flammable gas flow when the flammable component concentration rises above the operating limit
(8) If the creation of a gas mixture with a flammable gas content that is higher than intended results in the risk of explosions where none existed, controls shall be provided to shut off the flammable gas flow automatically when the flammable gas concentration rises above the operating limit.
(9) When the flammable gas concentration in a mixed gas exceeds the established high limit, an alarm shall be actuated to alert personnel in the area.
(10) Restart of flammable gas flow after a high concentration limit interruption shall require manual intervention at the site of the gas mixer.
(11) Safety shutoff valves used to admit combustible gases to the gas mixer shall be normally closed and capable of closing against maximum supply pressure.
(12) Atmosphere gas mixers installed outdoors shall be selected for outdoor service or placed in a shelter that provides weather protection.
(13) Where a gas mixer is sited in a shelter, the temperature within shall be maintained in accordance with the manufacturer's recommendations.

13.5.7 Flow Control of Special Atmospheres.

13.5.7.1* Processes and equipment for controlling flows of special atmospheres shall be designed, installed, and operated to maintain a positive pressure within connected furnaces.

13.5.7.2 The flow rates used shall restore positive internal pressure without infiltration of air during atmosphere contractions when furnace chamber doors close or workloads are quenched.

13.5.7.3* Where the atmosphere is flammable, its flow rate shall be sufficient to provide stable burn-off flames at vent ports.

13.5.7.4 Means shall be provided for metering and controlling the flow rates of all fluids comprising the special atmosphere for a furnace.

(A) Devices with visible indication of flow shall be used to meter the flows of carrier gases, carrier gas component fluids, inert purge gases, enrichment gases, or air.

(B)* Devices that meter the flow of inert purge gases shall meter and visibly indicate the flow rate by mechanical means.

(C) The installation of flow control equipment shall meet the following criteria:

(1) It shall be installed at the furnace, at the generator, or in a separate flow control unit.
(2) It shall be accessible and located in an illuminated area so that its operation can be monitored.

13.5.7.5 When flow rates and piping arrangements create a risk of flame strike back and burning within the furnace piping, it shall not be permissible to manifold flammable special atmospheres and process control air or admit both via a common inlet.

13.5.8 Synthetic Atmosphere Flow Control. Synthetic atmosphere flow control units shall have the additional capabilities specified in 13.5.8.1 through 13.5.8.11.

13.5.8.1 An atmosphere flow control unit equipped with an inert purge mode shall have a manually operated switch on the face of the unit that actuates the purge.

13.5.8.2 A safety interlock shall be provided for preventing the initial introduction of flammable fluids into a furnace before the furnace temperature has risen to 1400°F (760°C).

13.5.8.3* When a flammable liquid is used as a carrier gas and introduced in the liquid state, a second low temperature interlock shall be provided if flow of the liquid state is continued at less than 1400°F (760°C). The second interlock shall interrupt the flow of the flammable liquid atmosphere into a furnace when the furnace temperature is less than the temperature needed to reliably dissociate the liquid special atmosphere used.

13.5.8.4 Automatically operated flow control valves shall halt flows of combustible fluids in the event of a power failure.

13.5.8.5 Resumption of combustible fluid flow following a power failure shall require manual intervention (reset) by an operator after power is restored.

Copyright 2014 National Fire Protection Association (NFPA). Licensed, by agreement, for individual use and download on October 4, 2014 to LEADER and READER for designated user PATTARAPORN SRITRAKOOL. No other reproduction or transmission in any form permitted without written permission of NFPA. For inquires or to report unauthorized use, contact licensing@nfpa.org.

13.5.8.6 Where the flammable fluid flow is interrupted, one of the following shall apply:

(1) The flow control unit shall automatically admit a flow of inert gas that restores positive pressure and shall initiate an audible and visual alarm, unless otherwise permitted by 13.5.8.6(2).
(2) Manual inert gas purge shall be provided for furnaces where operators are present and able to effect timely shutdown procedures subject to the authority having jurisdiction.

13.5.8.7 Means shall be provided to test for leakfree operation of safety shutoff valves for flammable or toxic fluids.

13.5.8.8 Safety relief valves to prevent overpressurizing of glass tube flowmeters and all other system components shall be in accordance with ASME B31.3, *Process Piping*.

13.5.8.9 The effluents from relief valves used to protect control unit components containing flammable or toxic fluids shall be piped to an approved disposal location.

13.5.8.10 Alternative valves meeting the following criteria shall be provided for manually shutting off the flow of flammable fluids into a furnace:

(1) They shall be separate from the atmosphere control unit.
(2) They shall be accessible to operators.
(3) They shall be located remotely from the furnace and the control unit.

13.5.8.11* Pipes feeding atmosphere flow control units shall contain isolation valves.

13.5.8.12 Automatic excess flow shutoff protection shall be provided for each liquid special atmosphere.

(1)*The excess flow sensor shall be located immediately downstream of the filter required in 13.5.11.10.5.
(2) Upon detection of liquid special atmosphere excess flow, the liquid special atmosphere safety shutoff valve shall close.

13.5.9 Piping Systems for Special Atmospheres.

13.5.9.1 Piping shall be sized for the full flow of special atmospheres to all connected furnaces at maximum demand rates.

13.5.9.2 Pressure vessels and receivers shall be constructed of materials compatible with the lowest possible temperature of special processing atmospheres, or controls shall be provided to stop the flow of gas when the minimum temperature is reached.

(A) A low temperature shutoff device used as prescribed in 13.5.9.2 shall not be installed so that closure of the device can interrupt the main flow of inert safety purge gas to connected furnaces containing indeterminate special processing atmospheres.

(B) If closure of a low temperature shutoff device creates any other hazard, an alarm shall be provided to alert furnace operators or other affected persons of this condition.

(C) The user shall consult with the industrial gas supplier to select the low temperature shutoff device, its placement, and a shutoff set point temperature.

13.5.9.3 Flammable liquid piping shall be supported and isolated from vibration sources that could damage it, and allowance for expansion and contraction due to temperature changes shall be made.

13.5.9.4 Pipes conveying flammable liquids shall contain pressure relief valves that protect them from damage due to expansion of such liquids when heated.

13.5.9.5 Discharge of flammable liquids from the relief valves shall be piped to an approved location.

13.5.9.6 Means shall be provided for automatically releasing accumulations of inert pressurizing gas from elevated sections of piping that otherwise could inhibit or disrupt the flow of the liquid.

13.5.9.7 Gas vented from the gas relief devices required by 13.5.9.6 shall be disposed of in an approved manner.

13.5.9.8 Use of aluminum or lead components, including solders that contain lead, or other incompatible materials in tanks, piping, valves, fittings, filters, strainers, or controls that might have contact with methanol liquid or vapor shall not be permitted.

13.5.9.9 Solders that contain lead shall not be used to join pipes containing flammable liquids.

13.5.9.10 Use of brass or other copper alloy components in tanks, piping, filters, strainers, or controls that might have contact with ammonia shall not be permitted.

13.5.10* Special Atmospheres and Furnaces as Classified in 13.5.11.

13.5.10.1 Indeterminate Atmospheres. Indeterminate atmospheres shall be treated as flammable atmospheres with the following considerations:

(1) Where one special atmosphere is replaced with another special atmosphere (e.g., flammable replaced with nonflammable) that can cause the atmosphere to become indeterminate at some stage, burn-in or burn-out procedures shall not be used.
(2) In the case of any indeterminate atmosphere, inert gas purge procedures alone shall be used for introduction and removal of special processing atmospheres.

13.5.10.2 Automatic Cycling. Automatic cycling of a furnace (e.g., quenching, load transfer from a heated zone to a cold vestibule) shall not be permitted where the special atmosphere has become indeterminate during the replacement of a flammable atmosphere with a nonflammable or an inert atmosphere (or vice versa) until the special atmosphere in all furnace chambers has been verified as either flammable, nonflammable, or inert.

13.5.10.3 Furnace Type. The type of furnace shall be determined in accordance with Table 13.5.10.3.

13.5.11 Design Requirements for the Introduction, Use, and Removal of Flammable and Indeterminate Special Atmospheres from Furnaces.

13.5.11.1 General.

(A) Flammable and indeterminate atmosphere gases shall be introduced, used, and removed from furnaces without creating an uncontrolled fire, deflagration, or explosion.

(B)* Special atmosphere furnaces that use flammable or indeterminate special atmospheres shall be designed and maintained to minimize the unintended infiltration of air into the furnace.

Copyright 2014 National Fire Protection Association (NFPA). Licensed, by agreement, for individual use and download on October 4, 2014 to LEADER and READER for designated user PATTARAPORN SRITRAKOOL. No other reproduction or transmission in any form permitted without written permission of NFPA. For inquires or to report unauthorized use, contact licensing@nfpa.org.

Table 13.5.10.3 Types of Class C Furnaces

Furnace Type	Feature	Operating Temperature	Example
Type I	The chamber(s) <1400°F are separated by doors from those operating at > 1400°F	One or more zones always >1400°F	Pusher tray (cold chambers at each end, inner and outer doors with and without integral quench)
Type II		Can be <1400°F after introduction of a cold load	Batch integral quench (1 or more cold chambers, integral quench)
Type III	Both inlet and outlet ends of furnace are open and no external doors or covers	At least one zone >1400°F and have no inner doors separating zones > and <1400°F	Belt (both ends open)
Type IV	Only one end of the furnace is open and there are no external doors or covers		Belt (with integral quench, entry end open)
Type V	Outer doors or covers are provided		Box (exterior door)
Type VI		>1400°F before introduction and removal of special atmosphere gas	
Type VII		Never >1400°F	
Type VIII	A heating cover furnace with an inner cover	A heating cover and inner cover are separated from a base that supports the work being processed	Bell (with or without retort)
Type IX	A heating cover furnace without an inner cover or with a nonsealed inner cover		Car tip-up

For SI units, 1400°F = 760°C.

(C)* Operating instructions for introducing, using, and removing flammable special atmosphere gases shall comply with Chapter 13 and Section 7.3.

(D)* Where present, the liquid level in manometers or bubbler bottles on vent lines shall be checked and maintained at the required operating range as necessary.

(E)* Discharge from effluent vents of furnaces using special atmospheres shall be piped or captured by hoods and discharged to an approved location.

(F)* Process control air or burnout air shall be supplied from an air blower.

13.5.11.2 Burn-Off Pilots and Other Ignition Sources. This section applies to burn-off pilots and other ignition sources provided for the purpose of igniting flammable special atmosphere gases at effluent stacks, open ends, or doors when a flammable atmosphere is present in the furnace.

(A) A burn-off pilot, glow plug, flame screen, or other source of ignition shall be provided and located at the gas–air interface and sized to reliably ignite the flammable special atmosphere gas that is released at effluents, open ends or doors.

(B)* Burn-off pilots that are exposed to inert purge gas or special atmosphere gas under either normal or emergency conditions shall be of a type that will remain in service to ignite flammable effluent gases.

(C)* Burn-off pilots igniting effluent from vent pipes shall not require flame supervision.

(D) Where burn-off pilots are the primary ignition source for effluent from open furnace ends, at least one burn-off pilot shall have flame supervision at each open end.

(E)* Where one or more burn-off pilots are the primary ignition source at a door, at least one burn-off pilot shall have

Copyright 2014 National Fire Protection Association (NFPA). Licensed, by agreement, for individual use and download on October 4, 2014 to LEADER and READER for designated user PATTARAPORN SRITRAKOOL. No other reproduction or transmission in any form permitted without written permission of NFPA. For inquires or to report unauthorized use, contact licensing@nfpa.org.

flame supervision interlocked to prevent automatic door opening in the event of flame failure.

(F) Burn-off pilots that have flame supervision shall accomplish the following:

(1) Provide an audible and visual alarm to alert the operator to the failure
(2) Not shut off the burn-off pilot gas in the event of flame failure

(G)* Burn-off pilot gas shall not shut off in the event of power failure.

(H)* Burn-off pilots shall be located and sized to reliably ignite the effluent stream.

(I) Each burn-off pilot shall be equipped with an individual manual shutoff valve.

(J)* Burn-off pilots gas supply source shall be located downstream of the equipment main manual isolation valve and upstream of any other shutoff devices that can close automatically, including safety shutoff valves.

13.5.11.3* Flame Curtains. Where a flame curtain is used, the following features shall be provided and in service:

(1) One or more flame curtain pilots shall be positioned to reliably ignite the flame curtain.
(2) At least one flame curtain pilot at a flame curtain shall have flame supervision interlocked to prevent the opening of a closed door served and interlocked to prevent operation of the flame curtain at the door served.
(3) At least one safety shutoff valve upstream of all flame curtains on a furnace shall be interlocked to close upon the following conditions:
    (a) Low fuel gas pressure on the flame curtain fuel gas supply
    (b) High fuel gas pressure on the flame curtain fuel gas supply where a high gas pressure issue would create a safety concern
(4) An automatic control valve shall be provided ahead of each flame curtain arranged to open when the door served is not closed.
(5) When the safety shutoff valve in item 13.5.11.3(3) is closed, any doors served by that safety shutoff valve shall be interlocked so they cannot open.
(6)*A manual means of overriding the door interlock in 13.5.11.3(5) shall be provided.

13.5.11.4 Flammable Special Atmosphere Introduction. Flammable special atmospheres shall be introduced into a furnace using one of the following methods:

(1) Purge-in
(2) Burn-in

13.5.11.5 Flammable Special Atmosphere Removal. Flammable special atmospheres shall be removed from a furnace using one of the following methods:

(1) Purge-out
(2) Burn-out

13.5.11.6 Purge-in Requirements.

13.5.11.6.1 Written purge-in instructions shall be provided for each furnace.

(A)* Purge effectiveness shall not be compromised during the purge process.

(B) Furnace doors and covers shall be positioned in accordance with the operating instructions before purge-in begins. The inner and outer covers of Type VIII and Type IX furnaces shall not be placed in position onto the furnace base unless the workload and base are at least 50°F (28°C) below the autoignition temperature of any flammable gas mixture that can be present in the cover.

13.5.11.6.2 Purge-in shall reduce the oxygen content of the furnace to less than 1 percent by displacement with an inert gas or before introduction of the flammable special atmosphere gas.

13.5.11.6.3 Positive Furnace Pressure.

(A) A positive furnace pressure shall be maintained during the purge-in process and continue through the transition from the inert gas purge to the introduction of special atmosphere gas.

(B) Positive pressure for Type VIII or Type IX heating-cover (retort) type furnaces shall be indicated by a bubbler, vent manometer, or similar device.

13.5.11.6.4* During the inert gas purge, flammable special atmosphere safety shutoff valves shall remain closed.

13.5.11.6.5 Purging of the furnace shall continue until the purge has been verified as complete using one of the following methods:

(1) Time-flow purge method in accordance with 13.5.12.
(2) Two consecutive analyses of all chambers indicating that the oxygen content is less than 1 percent

13.5.11.6.6 Furnaces shall not be required to be at any specific temperature when the inert gas is displaced by the flammable special atmosphere gases.

13.5.11.6.7* Active sources of ignition shall be provided at interfaces between air and flammable or indeterminate special atmosphere gases at furnace openings and doors. Effluent vents terminating inside a building shall also be provided with an active source of ignition.

13.5.11.6.8* All furnace and vestibule volumes that will contain a flammable special atmosphere gas shall be purged with inert gas prior to the special atmosphere gas being admitted.

13.5.11.6.9 During the inert gas purge, all flame curtain fuel gas valves shall be closed.

13.5.11.6.10 During the inert gas purge, all circulating and recirculating fans shall be operating as required by the operating instructions.

13.5.11.6.11 Flammable special atmosphere gases shall not be introduced unless the following conditions exist:

(1) Burn-off pilots at open ends, doors, and effluent lines are ignited.
(2) All manual valves to flame curtains (where provided) are open.
(3) All automatic valves to flame curtain are in service.
(4)*All required quench fluid levels are at the correct level.
(5) Purging of the furnace has been completed as defined by 13.5.11.6.5.
(6) Operation of flame curtains (where provided) is verified.

13.5.11.6.12* After the introduction of the flammable special atmosphere, the purge-in atmosphere introduction process is considered complete when flame appears at furnace doors, open ends, or effluent lines in accordance with the specific design features and operating instructions for the furnace.

Copyright 2014 National Fire Protection Association (NFPA). Licensed, by agreement, for individual use and download on October 4, 2014 to LEADER and READER for designated user PATTARAPORN SRITRAKOOL. No other reproduction or transmission in any form permitted without written permission of NFPA. For inquires or to report unauthorized use, contact licensing@nfpa.org.

13.5.11.7 Burn-in Requirements.

13.5.11.7.1 Written burn-in instructions shall be provided for each furnace.

(A)* Burn-in effectiveness shall not be compromised by taking any action that deviates from the written operating instructions for burn-in.

(B) The position of inner and outer furnace doors and the placement of manual torches shall be as directed in the operating instructions during each stage of the burn-in procedure.

13.5.11.7.2* Burn-in shall reduce the oxygen content of the furnace by consuming the oxygen in the air through combustion with a flammable atmosphere gas that will reliably ignite at the gas–air interfaces.

13.5.11.7.3* To begin the burn-in process, the flammable special atmosphere gas shall be introduced at a location in the furnace that is at or above 1400°F (760°C).

13.5.11.7.4* Where a stable flame front propagating through a chamber under 1400°F (760°C) cannot be maintained, the burn-in process shall not be used.

13.5.11.7.5* For zones under 1400°F (760°C), stable flames of burning gas shall be maintained in the zones as the special atmosphere gas is burned-in.

13.5.11.7.6* For a Type II furnace (batch integral quench furnace) with heating chamber fan, the fan shall not be operating during burn-in while the inner heating chamber door is open.

13.5.11.7.7* For Types I through VII furnaces, recirculating fans in cooling zones shall be turned off during burn-in.

13.5.11.7.8 Special Requirements for Type VIII and IX Furnaces.

(A) Circulating base fans, where provided, shall be turned on.

(B)* The cover shall be sealed to the furnace base before flammable or indeterminate special atmospheres are introduced.

(C)* Where a furnace uses an oil seal between a cover and a base, means shall be provided so that furnace pressure is maintained below the static head pressure of the seal oil.

13.5.11.7.9 For Type VIII furnaces, atmosphere introduction shall be by purge-in, and atmosphere removal shall be by purge-out; burn-in and burn-out procedures shall not be used.

13.5.11.7.10* After the introduction of the flammable special atmosphere, the burn-in atmosphere introduction process shall be considered complete when flame appears at the furnace doors, open ends, or effluent lines, where present, in accordance with the specific design features and operating instructions for the furnace.

13.5.11.8 Purge-out Requirements.

13.5.11.8.1 Written purge-out instructions shall be provided for each furnace.

(A)* Purge effectiveness shall not be compromised during the purge process.

(B) Furnace doors and covers shall be positioned in accordance with the manufacturer's instructions before purge-out begins.

13.5.11.8.2 Positive Furnace Pressure.

(A) A positive furnace pressure shall be maintained at all times during purge-out, including the transition from the special atmosphere gas operation to the inert gas purge.

(B) For Types VIII and IX furnaces, an indication of positive furnace pressure shall be provided by an indicating manometer or similar device.

13.5.11.8.3* Once the inert purge gas flow has been established for purge-out, the flow of all flammable special atmosphere gases shall be stopped.

13.5.11.8.4* Purging shall include all of the furnace volume that contains a flammable or indeterminate special atmosphere gas.

13.5.11.8.5* Purge-out shall be considered complete when all chambers that would create a hazard are below 50 percent of LFL and shall be determined by one of the following two methods:

(1) Time-flow purge method in accordance with 13.5.12 as it applies to the purge-out process
(2) Two consecutive analyses of all chambers indicating that the flammable level within the furnace is below 50 percent of LFL

13.5.11.8.6 When purge-out is complete, the following shall be permitted to be turned off:

(1) Burn-off pilots
(2) Circulation and recirculation fans required for purge-out
(3) Inert purge gas supply to the furnace
(4) Flame curtains

13.5.11.9 Burn-Out Requirements.

13.5.11.9.1 Written burn-out instructions shall be provided for each furnace.

(A)* Burn-out effectiveness shall not be compromised by taking any action that deviates from the written operating instructions for burn-out.

(B)* Inner and outer furnace doors, where provided, shall be placed in the appropriate position as directed in the operating instructions during each stage of the burn-out procedure.

13.5.11.9.2* Through the controlled admission of air to a furnace, burn-out shall reduce the flammable content within all heating chambers and vestibules through combustion with the oxygen in the air.

13.5.11.9.3* To initiate the burn-out process, one of the following conditions shall be met:

(1) Air is introduced into the furnace at a point that is at or above 1400°F (760°C).
(2) Where air is introduced into a furnace at a point below 1400°F (760°C), the following shall apply:
   (a) *The furnace is under positive pressure.
   (b) A source of ignition is provided at the interface between the flammable atmosphere and the point of air introduction.

13.5.11.9.4 Burn-out shall include turning off all special atmosphere gases and admitting air in a sequence outlined in the written burn-out instructions.

Copyright 2014 National Fire Protection Association (NFPA). Licensed, by agreement, for individual use and download on October 4, 2014 to LEADER and READER for designated user PATTARAPORN SRITRAKOOL. No other reproduction or transmission in any form permitted without written permission of NFPA. For inquires or to report unauthorized use, contact licensing@nfpa.org.

13.5.11.9.5 Burnout air shall be admitted by any of the following arrangements:

(1) Through furnace doors
(2) Through independent piping and furnace gas inlets
(3) Through sections of piping and furnace inlets that are common to both flammable special atmosphere and burnout air when the systems are designed to prevent the flow of air and flammable special atmosphere at the same time

13.5.11.9.6* During burn-out, recirculating fans shall be turned off in furnace zones under 1400°F (760°C) and in zones at or above 1400°F (760°C) that can cause turbulence in zones under 1400°F (760°C).

13.5.11.9.7 Burn-out shall be considered complete when one of the following conditions is satisfied:

(1) For furnaces that do not contain soot, all visible flame in the furnace and at all effluents are observed to be extinguished.
(2) For furnaces that contain soot that cannot re-form a flammable atmosphere gas, all visible flames in the furnace and at all effluents are observed to be extinguished.
(3) For furnaces that contain soot that re-form flammable atmosphere gas, all visible flames in the furnace and at effluents are observed to be extinguished after burn-out procedures are performed that include the introduction of additional air to effect the burn-out of the re-formed flammable atmosphere gas.

13.5.11.9.8 When burn-out is complete, the following shall be permitted to be turned off:

(1) Burn-off pilots
(2) Circulation and recirculation fans required for burn-out
(3) Flame curtains

13.5.11.10* Special Atmosphere Equipment Piping System.

13.5.11.10.1 General. The special atmosphere equipment piping system shall be that piping starting at the equipment manual isolation valve that includes the components for the delivery of special atmosphere fluids to a furnace.

13.5.11.10.2 Manual Shutoff Valves and Equipment Isolation.

13.5.11.10.2.1* An equipment isolation manual shutoff valve shall be provided for each special atmosphere fluid, shall be located upstream of all devices on the special atmosphere equipment piping, and shall be lockable.

(A) Where fuel gas is used as a special atmosphere gas, a separate manual shutoff valve shall be provided for the special atmosphere feed. This valve shall not be required to be lockable where the fuel gas main isolation manual shutoff valve is lockable.

(B) Equipment isolation manual shutoff valves for each special atmosphere fluid shall be accessible from the normal operator working level without the use of ladders or portable equipment.

13.5.11.10.2.2 The position of any manual shutoff valve that can interrupt the supply of inert gas to an automatic inert purge gas line shall be electrically supervised and cause a visual and audible alarm to alert the operator whenever this valve is not in the open position and the automatic inert purge is required to be in service.

13.5.11.10.2.3 A bypass manual shutoff valve shall be provided to bypass each normally open emergency inert gas purge valve, and be arranged as follows:

(1) Be accessible to the operator for use in accordance with written operating instructions
(2) Have a port area equal to or larger than the bypassed normally open emergency inert gas purge valve

13.5.11.10.2.4 Each manual shutoff valve shall have a tag that identifies the valve and the special atmosphere it controls.

13.5.11.10.2.5 The operating instructions required by 7.3.3 shall reference the valve tag identifications required by 13.5.11.10.2.4.

13.5.11.10.2.6 Each manual shutoff valve shall be in accordance with 6.3.4.1.

13.5.11.10.2.7 Manual valves that are not used for shutoff shall not be required to comply with 13.5.11.10.2 other than 13.5.11.10.2.4.

13.5.11.10.3 Regulators.

(A) Regulators shall be provided on each special atmosphere gas line where the gas supply pressure exceeds the operating or design parameters of equipment piping and components in the equipment piping.

(B)* Regulator atmospheric vents shall be vented to an approved location.

(C) Regulator vents shall not be manifolded with the following:

(1) Vents from other furnaces
(2) Vents downstream of the safety shutoff valves
(3) Relief valve vents

(D)* Where a regulator vent is manifolded with other vents, the area of the vent manifold shall equal or exceed the sum of the individual vent line areas of each vent line served from its point of connection.

(E) The regulator vent termination shall be designed to prevent the entry of water and insects without restricting the flow capacity of the vent.

13.5.11.10.4 Relief Valves.

(A)* Relief valves shall be provided downstream of any regulator where a regulator failure could expose downstream piping, components, or furnace to pressures exceeding their maximum design pressure.

(B)* Relief valve(s) or other means of controlling pressure shall be provided for each liquid special atmosphere piping system where there is a potential to overpressurize the liquid special atmosphere piping. This specifically includes each section of liquid-filled special atmosphere piping that can be isolated by valves.

(C)* Relief valves shall be piped to an approved location.

(D) Relief valve piping shall not be manifolded with either of the following:

(1) Vents from other furnaces
(2) Vents from regulators

(E) Relief valve piping shall not be manifolded with other relief valve piping where either of the following could occur:

(1) Mixing of liquids and gases
(2) Mixing of fluids (liquids or gases) that could result in corrosion to relief valves or relief valve piping

Copyright 2014 National Fire Protection Association (NFPA). Licensed, by agreement, for individual use and download on October 4, 2014 to LEADER and READER for designated user PATTARAPORN SRITRAKOOL. No other reproduction or transmission in any form permitted without written permission of NFPA. For inquires or to report unauthorized use, contact licensing@nfpa.org.

13.5.11.10.5 Filters.

(A) A filter shall be provided upstream of each liquid flow sensor.

(B) A filter shall have a particle size rating that will not allow particles of a size that can foul liquid flow sensors or liquid flowmeters to pass the filter.

13.5.11.10.6 Flowmeters. One flowmeter shall be provided on each special atmosphere equipment supply line.

13.5.11.10.7 Pressure Gauges. Pressure gauges shall be provided at points in the special atmosphere equipment piping where the operator must be provided visual pressure information to verify the furnace is being maintained within safe operating limits. These points shall be determined as part of the furnace design.

13.5.11.10.8* Atmosphere Inlets. Atmosphere inlets shall not be located in such a way that atmosphere flow will directly impinge on temperature control or over temperature control thermocouples.

13.5.11.11 Special Atmosphere Safety Equipment. Paragraphs 13.5.11.11.1 through 13.5.11.11.17 shall apply to the safety equipment and its application to the furnace special atmosphere system.

13.5.11.11.1 All safety devices, with the exception of flow sensors, shall be one of the following:

(1) Listed for the service intended
(2) Approved where listed devices are not available
(3) Programmable controllers applied in accordance with Section 8.4

13.5.11.11.2 Electric relays and safety shutoff valves shall not be used as substitutes for electrical disconnects and manual shutoff valves.

13.5.11.11.3 Regularly scheduled inspection, testing, and maintenance of all safety devices shall be performed. *(See Section 7.5.)*

13.5.11.11.4 Safety devices shall be installed, used, and maintained in accordance with this standard and manufacturers' instructions.

13.5.11.11.5 Where a device is used with a flammable special atmosphere gas and the device manufacturer's instructions require conduit seals or a cable type that will not permit transfer of gas, the required seals or cable type shall be installed.

13.5.11.11.6 Safety devices shall be located or guarded to protect them from physical damage.

13.5.11.11.7 Safety devices shall not be bypassed electrically or mechanically.

(A) The requirement in 13.5.11.11.7 shall not prohibit safety device testing and maintenance in accordance with Chapter 7. Where a system includes a built-in test mechanism that bypasses any safety device, it shall be interlocked to prevent operation of the system while the device is in test mode, unless listed for that purpose.

(B) The requirement in 13.5.11.11.7 shall not prohibit a time delay applied to the action of pressure proving or flow proving, where the following conditions exist:

(1) There is an operational need demonstrated for the time delay.
(2) The use of a time delay is approved.
(3) The time delay feature is not adjustable beyond 5 seconds.
(4) A single time delay does not serve more than one pressure-proving or flow-proving safety device.
(5) The time from an abnormal pressure or flow condition until the holding medium is removed from the safety shutoff valves does not exceed 5 seconds.

13.5.11.11.8* A manual emergency means shall be provided for the removal of the furnace special atmosphere using the method, either purge-out or burn-out, that is the basis of the furnace design.

13.5.11.11.9 The activation of any carrier gas or furnace pressure safety interlock required in 13.5.11.11 shall initiate the appropriate action to bring the furnace to a safe state. The action shall be manual or automatic in accordance with the furnace design and operating instructions.

13.5.11.11.10 Removal of Flammable Special Atmospheres.

(A)* Removal of flammable special atmospheres by burn-out, purge-out, or emergency purge-out shall be initiated under the following conditions:

(1) Normal furnace atmosphere burn-out initiated
(2) Normal furnace atmosphere purge-out initiated
(3) Low flow of carrier gas(es) that will not maintain a positive pressure in chambers below 1400°F (760°C) and positive pressure not restored by the automatic transfer to another source of gas
(4) A furnace temperature below which any liquid carrier gas used will not reliably dissociate
(5) Automatic emergency inert gas purge initiated
(6) Manual operator emergency inert gas purge initiated

(B) When removal of flammable special atmospheres is initiated in response to the conditions listed in 13.5.11.11.10(A)(3) through 13.5.11.11.10(A)(6), one of the following shall occur based upon chamber temperature:

(1) For chambers below 1400°F (760°C), one of the following actions shall occur, and the selected action shall be implemented as part of the furnace design:
    (a) Automatically burned-out where burn-out is an acceptable option
    (b) Purged-out by normal means where burn-out is not an acceptable option
    (c) Automatically purged-out by emergency inert gas purge
    (d) Manual burn-out or purge-out by manual emergency inert gas purge where furnace design allows the time needed for manual action
(2) For chambers at or above 1400°F (760°C), the chamber shall be manually or automatically burned-out or purged-out.

13.5.11.11.11 Flammable Special Atmosphere Safety Shutoff Valves — General.

(A) One safety shutoff valve shall be provided in the supply line of each flammable special atmosphere gas or liquid.

(B)* Exothermic generated special atmosphere gas supplies used for both purging and process shall not require safety shutoff valves.

(C) Safety shutoff valve components shall be of materials selected for compatibility with the gas or liquid handled and for ambient conditions.

(D) Means for testing all gas safety shutoff valves for valve seat leakage shall be installed.

Copyright 2014 National Fire Protection Association (NFPA). Licensed, by agreement, for individual use and download on October 4, 2014 to LEADER and READER for designated user PATTARAPORN SRITRAKOOL. No other reproduction or transmission in any form permitted without written permission of NFPA. For inquires or to report unauthorized use, contact licensing@nfpa.org.

(E)* A test of seat leakage of gas safety shutoff valves shall be completed at least annually.

13.5.11.11.12 Flammable Special Atmosphere Safety Shutoff Valves.

(A) For furnaces using burn-in procedures for introducing flammable special atmosphere carrier gases, it shall be permissible to admit flammable special atmosphere carrier gas when the following conditions exist:

(1) The furnace temperature exceeds 1400°F (760°C) at the point where the flammable special atmosphere carrier gas is introduced.
(2) If the furnace is designed to operate with an automatic inert gas purge, the presence of the required inert gas pressure shall be verified manually or automatically.
(3) Operator action opens the valve.

(B) For furnaces using purge-in procedures for introducing flammable special atmosphere carrier gases, it shall be permissable to admit flammable special atmosphere carrier gas when one following conditions exist:

(1) The inert gas purge is complete.
(2) If the furnace is designed to operate with an automatic inert gas purge, the presence of the required inert gas pressure shall be verified manually or automatically.
(3) Operator action opens the valve.

(C) For furnaces using burn-in or purge-in procedures for introducing flammable special atmosphere gases that are not carrier gases, the safety shutoff valves for the noncarrier gases shall open only when the carrier gas flow has been established.

(D)* Safety shutoff valves shall automatically close upon occurrence of the following conditions:

(1) Normal furnace atmosphere burn-out initiated
(2) Normal furnace atmosphere purge-out initiated
(3) Low flow of carrier gas(es) that will not maintain a positive pressure in chambers below 1400°F (760°C) and positive pressure not restored by the automatic transfer to another source of gas
(4) A furnace temperature below which any liquid carrier gas used will not reliably dissociate
(5) Automatic emergency inert gas purge initiated
(6) Manual operator emergency inert gas purge initiated
(7) Power failure
(8) Liquid carrier gas excess flow

13.5.11.11.13 Emergency Inert Gas Purge.

(A) Where a furnace is designed for purge-out, the inert purge gas equipment pipe shall be controlled by a normally open purge control valve.

(B) Where a furnace is equipped with an emergency inert gas purge, the emergency inert gas purge shall be initiated upon any of the following conditions:

(1) Low flow of carrier gas(es) that will not maintain a positive pressure in chambers below 1400°F (760°C) and positive pressure not restored by the automatic transfer to another source of gas
(2) A furnace temperature below which sufficient dissociation of liquids intended for use as a carrier gas will not occur at levels required to maintain positive furnace pressure
(3) Manual operator emergency inert gas purge initiated
(4) Power failure

13.5.11.11.14 Special Atmosphere Flow Interlocks.

(A) Minimum carrier gas flow(s) required by this standard shall be proved by either:

(1) A flow switch for each special atmosphere that is considered a carrier gas
(2) Furnace pressure switch(s)

(B) If minimum carrier gas flow is not proven, the following shall be applied:

(1) Actions listed in 13.5.11.11.10(b) shall be initiated.
(2) Visual and audible alarms shall alert the operator of loss of minimum carrier gas flow.

(C) Inert purge gas equipment piping shall be equipped with:

(1) A pressure switch that will audibly and visually alert the operator of a low purge pressure condition.
(2) A flow switch that will audibly and visually alert the operator of a low purge flow condition.

13.5.11.11.15* Furnace vestibules shall be equipped with means for explosion relief.

13.5.11.11.16* The flow of noncarrier special atmosphere gases that are nonflammable shall not be permitted until minimum carrier gas flow has been proven.

13.5.11.11.17 Operating Precautions for Heating Cover–Type Furnaces. The rate of separating a heating cover from or rejoining a heating cover to the inner cover shall not exceed a rate that causes rapid expansion or contraction of the atmosphere gas inside the inner cover.

13.5.12* Timed Flow Purge Method for Type I Through Type IX Furnaces.

13.5.12.1* Purging After Failure of Atmospheric Circulation. When the timed purge has been established with circulating fans operating, a purge time extension shall be applied if the fans are inoperative.

CAUTION: Purging without atmosphere circulation can leave pockets of combustible gases inside a furnace.

13.5.12.2 Timed Flow Purging Trials.

13.5.12.2.1 At the time of commissioning or initial start-up, the equipment supplier or the agency authorizing purchase of the furnace shall perform trials that confirm the adequacy and effectiveness of a timed flow purge.

13.5.12.2.2 The test data and results shall be recorded and maintained as a permanent record and made available to the authority having jurisdiction.

13.5.12.2.3 The trial shall be conducted using ambient temperature purge gas flowed into an unheated furnace.

(A) The work chamber shall not contain work or any objects that reduce its internal volume.

(B) Atmosphere circulation fans inside the furnace shall have proved operation during the entire purge period.

13.5.12.2.4 The trials shall incorporate all of the following:

(1) Verification that the purge gas flow rate or cumulative volume measurement is correct.
(2) Verification that the measured purge gas flow rate or volume is undiminished at one of the following:
    (a) Furnace atmosphere outlet

Copyright 2014 National Fire Protection Association (NFPA). Licensed, by agreement, for individual use and download on October 4, 2014 to LEADER and READER for designated user PATTARAPORN SRITRAKOOL. No other reproduction or transmission in any form permitted without written permission of NFPA. For inquires or to report unauthorized use, contact licensing@nfpa.org.

(b) Furnace atmosphere inlet to each individual furnace, with no further downstream branching, tees, valves, or openings in the pipeline — only the inlet to the furnace

(3) Use of a gas analyzing instrument(s) that is listed and calibrated in accordance with the manufacturer's instructions

13.5.12.2.5 Where oxygen is being purged out of a furnace using an inert gas, verification testing shall be considered acceptable if, after five furnace volume changes of flow, two consecutive gas analyses of the effluent gas indicate less than 1 percent oxygen by volume.

13.5.12.2.6 Where a combustible atmosphere is being purged out of a furnace using an inert gas, verification testing shall be conducted at the typical purging temperature and shall be considered acceptable if, after five furnace volume changes of flow, two consecutive gas analyses of the effluent gas indicate that the atmosphere is less than 50 percent of the LFL.

13.5.12.3* Future Purge Verifications.

(A) Trials prescribed in 13.5.12.2 shall be repeated periodically, as specified in the furnace manufacturer's instructions, to verify that future alterations to the furnace or atmosphere piping have not diminished the effectiveness of the purge.

(B) The user shall perform the retests and retain written records of the results for review by the authority having jurisdiction.

13.5.12.4 Failure to Verify Timed Flow Purge Effectiveness. In the event that the trials required in 13.5.12.2 and 13.5.12.3 fail to verify the effectiveness of the purge process, procedures utilizing gas analyzers to prove completeness of purges shall be utilized until the cause of the failure is found and remedied and successful trials are completed.

13.5.13 Integral Quench Furnaces.

13.5.13.1 Quench Vestibule.

(A)* The inner door between the furnace and the quench vestibule shall seal the opening.

(B) Emergency or service access shall be provided.

(C) All outer load and unload doors shall be equipped with pilots that are stable under all operating conditions.

(D) The quench vestibule shall be supplied with an atmosphere gas supply to maintain safe conditions during the entire process cycle.

(E) The introduction and maintenance of this atmosphere shall be in accordance with 13.5.11 and 13.5.12.

(F) An effluent line (flammable atmosphere vent) shall be provided to control the pressure equilibrium in the chamber that terminates in an approved location.

(G) A stable pilot shall be provided at the effluent line and shall be sized to ignite the vented gases under all operating conditions.

(H) Manual facilities shall be provided to open the outer quench vestibule door.

13.5.13.2 Cooling Chamber Design.

(A) The materials of construction used for the cooling chamber shall be selected to provide resistance to corrosion by the cooling medium.

(B) Where the quench medium temperature is excessive for desired jacket cooling, a separate heat exchanger shall be employed.

(C) Where a water-cooled heat exchanger is used, the quench oil circulating pump shall be installed on the inlet side of the heat exchanger, and the following criteria also shall be met:

(1) The quench medium pressure shall always exceed that of the cooling water.
(2) A differential pressure switch shall be required and interlocked with the quench cycle.

(D) Where steel plate coils are attached by thermal contact cement to the external surfaces of the quench chamber fabricated of hot-rolled steel plate, the junction shall not cause the possibility of a water leak into the quench reservoir.

(E) Where serpentine coils formed from a noncorrosive tubing material are brazed or welded to the exterior surfaces of a cooling chamber fabricated of hot-rolled steel plate, the junction shall not cause the possibility of a water leak into the quench tank.

(F) Automatic temperature controls shall be installed in pressure-type water-cooling and oil-cooling systems to ensure the desired jacket temperature.

13.5.13.3* Elevator Design.

(A) The elevating mechanism shall be supported substantially by structural members in order to handle the maximum rated loads.

(B) Elevator guides or ways shall be provided to ensure uniform stabilized movement of the elevator in the confined areas of the quench tank.

(C) Tray guides or stops shall be provided to ensure that the tray is positioned in the correct orientation on the elevator.

(D) Outer door operation shall be interlocked in the automatic mode so that it cannot open unless the elevator is in its full up or down position or upon extinguishment of the flame-supervised outer door pilot, except through action of manual override in emergencies. *[See 13.5.13.1(H).]*

13.5.13.4 Lower Quench Chamber or Tank.

(A) The quench tank shall be designed and constructed to do the following:

(1) Contain the quench medium capacity at the expected operating temperature and with maximum workload volume
(2) Operate with a maximum quench medium level, where the elevator and workload are submerged, of not less than 6 in. (152 mm) below the door or any opening into the furnace

(B) The quench tank shall be tested for leaks prior to initial use, and any leaks identified shall be repaired before the tank is put into service.

(C) The quench tank shall have the capacity to quench a maximum gross load with a maximum temperature rise not exceeding 50°F (28°C) below the flash point and shall have cooling capabilities to return the quench medium to a satisfactory temperature range between minimum quench cycles.

(D) The quench tank shall be provided with an overflow, sized for the expected overflow volume, that is directed to an approved location outside the building or to a salvage tank.

Copyright 2014 National Fire Protection Association (NFPA). Licensed, by agreement, for individual use and download on October 4, 2014 to LEADER and READER for designated user PATTARAPORN SRITRAKOOL. No other reproduction or transmission in any form permitted without written permission of NFPA. For inquires or to report unauthorized use, contact licensing@nfpa.org.

(E) Overflow shall be trapped or otherwise arranged to prevent the loss of quench chamber atmosphere gas and to prevent a siphon effect.

13.5.13.5 Overflow Drains.

(A)* Quench tanks exceeding 150 gal (568 L) liquid capacity or 10 ft^2 (0.9 m^2) liquid surface area shall be equipped with a trapped overflow pipe leading to a location where the overflow volume will not create a hazard.

(B) Overflow pipes shall be sized in accordance with Table 13.5.13.5(B).

Table 13.5.13.5(B) Size of Overflow Pipes

Liquid Surface Area		Overflow Pipe Diameter, Minimum	
ft^2	m^2	in.	mm
<75	<7	3	75
75 to 150	7 to 14	4	100
150 to 225	14 to 21	5	125
225 to 325	21 to 30	6	150

(C) Where overflow pipe connections can be blocked by caked or dried material, access shall be provided for inspection and cleaning.

(D)* The bottom of the overflow connection shall be not less than 6 in. (152 mm) below the top of the tank for open integral quench tanks.

(E)* The bottom of the overflow connection shall be not less than 6 in. (152 mm) below the lowest operating oil level for closed integral quench tanks.

13.5.13.6* Quench Medium Cooling Systems.

13.5.13.6.1 Where the heat exchanger is inside the tank, it shall be constructed of materials that minimize corrosion by either cooling medium or quench medium.

(A) The heat exchanger shall be located within the quench tank in a manner that prevents mechanical damage by the elevator or by the load to be quenched.

(B) The cooling medium flow shall be controlled by an automatic temperature control.

(C) A pressure relief device shall be provided to protect the heat exchanger, with relief piped to an approved location.

(D) Water shall not be used as a cooling medium within a quench tank utilizing a combustible liquid quench medium.

13.5.13.6.2 External Liquid-Cooled Heat Exchanger.

(A) Heat exchanger tubes shall be constructed of a material selected to minimize corrosion.

(B) The pressure of the quench medium through the heat exchanger shall be greater than the coolant pressure applied.

(C) A differential pressure switch shall be required and interlocked with the quench cycle.

(D) A pressure relief device shall be provided to protect the heat exchanger with relief piped to an approved location.

13.5.13.6.3 External Air-Cooled Heat Exchanger. If the air-cooled heat exchanger is installed in a rooftop location, it shall be installed in a curbed or diked area and drained to an approved location outside the building.

13.5.13.7* Quench Tank Protective Features.

13.5.13.7.1 The quench reservoir shall be equipped with a quench medium level indicator.

13.5.13.7.2 If of the sight-glass type, the level indicator shall be of heavy-duty construction and protected from mechanical damage.

13.5.13.7.3 The quench tank shall be equipped with a low-level device that is arranged to sound an alarm to prevent the start of quenching and that shuts off the heating medium in case of a low-level condition.

13.5.13.7.4 Where agitation of the quench medium is required to prevent overheating, the agitation shall be interlocked to prevent quenching until the agitator has been started.

13.5.13.7.5 The quench oil shall be analyzed for water contamination.

(A)* The existence of water in quench oil shall be determined by laboratory testing or by other means.

(B)* A representative sample of quench oil shall be obtained.

(C)* Quench oil shall be tested for water content whenever there is a possibility that water has contaminated the quench oil system.

(D) Quenching operations shall be prohibited until the water contamination is corrected and confirmed by test.

13.5.13.8 Quench Tank Heating Controls.

13.5.13.8.1 Fuel-Fired Immersion Heaters.

(A) Burner control systems shall be interlocked with the quench medium agitation system, the recirculating system, or both to prevent localized overheating of the quench medium.

(B) The immersion tubes shall be installed so that the entire tube within the quench tank is covered with quench medium at all times.

(C) A quench medium level control and excess temperature supervision shall be interlocked to shut off fuel-fired immersion heating when low quench level or overtemperature is detected.

13.5.13.8.2 Electric Immersion Heaters.

(A) Electric immersion heaters shall be of sheath-type construction.

(B) Heaters shall be installed so that the hot sheath is fully submerged in the quench medium at all times.

(C) The quench medium shall be supervised by both of the following:

(1) Temperature controller that maintains the quench medium at the intended temperature
(2) Quench medium level control and excess temperature supervision that are interlocked to shut off the electric immersion heating when low quench level or overtemperature is detected

Copyright 2014 National Fire Protection Association (NFPA). Licensed, by agreement, for individual use and download on October 4, 2014 to LEADER and READER for designated user PATTARAPORN SRITRAKOOL. No other reproduction or transmission in any form permitted without written permission of NFPA. For inquires or to report unauthorized use, contact licensing@nfpa.org.

(D) The electrical heating system shall be interlocked with the quench medium agitation system to prevent localized overheating of the quench medium.

13.5.14* Open Liquid Quench Tanks.

13.5.14.1 Location.

(A) Tanks shall be located as far as practical from furnaces and shall not be located on or near combustible floors.

(B) Combustible materials shall not be stored in the vicinity of the quench tank.

13.5.14.2 Construction.

13.5.14.2.1 The tank shall be constructed of noncombustible material and shall be supported.

13.5.14.2.2 Supports for tanks over 500 gal (1900 L) in capacity or 10 ft^2 (1 m^2) in liquid surface area shall have a minimum fire resistance rating of 1 hour.

13.5.14.2.3 Location. The top of the tank shall be at least 6 in. (152 mm) above the floor.

13.5.14.2.4 Tank Features. Floating the flaming liquid out of the tank due to the collection of the automatic sprinkler discharge in the tank in the event of a fire shall be prevented by one or more of the following:

(1) Oil drain boards shall be arranged so sprinkler discharge cannot be conducted into the tank.
(2) Tanks shall be equipped with automatically closing covers.
(3) Tanks shall be equipped with overflow pipes. *(See 13.5.14.2.5.)*

13.5.14.2.5 Overflow Pipes.

(A) Tanks exceeding 150 gal (570 L) in capacity or 10 ft^2 (1 m^2) in liquid surface area shall be equipped with a trapped overflow pipe leading to an approved location.

(B) Quench tank overflow pipes exceeding 150 gal (570 L) in capacity or 10 ft^2 (1 m^2) in area shall be sized to handle the maximum delivery of quench tank liquid fill pipes or automatic sprinkler discharge but shall be not less than 3 in. (76 mm) in diameter.

(C) Piping connections on drains and overflow lines shall be designed for access for inspection and cleaning of the interior.

(D) Overflow pipes installed in quench tanks shall have a minimum liquid entry level of 6 in. (152 mm) below the top of the tank.

(E) Overflow pipes shall not contain any valves or other restrictions.

13.5.14.2.6 Emergency Drains.

(A) The provisions of 13.5.14.2.6 shall not apply to integral quench furnaces.

(B) Tanks exceeding 500 gal (1900 L) liquid capacity shall be equipped with bottom drains arranged to drain the tank, both manually and automatically, unless otherwise permitted by 13.5.14.2.6.

(C) Bottom drains, as specified in 13.5.14.2.6, shall not be required if the viscosity of the liquid at ambient temperatures makes their use impractical.

(D) Drain facilities from the bottom of a tank shall be permitted to be combined with the oil-circulating system or arranged independently to drain the oil to a location where the oil will not create a hazard.

(E) Emergency drains shall use gravity flow or automatic pumps.

(F) Emergency drains shall be trapped and shall discharge to a closed, vented salvage tank or to a location outside where the oil will not create a hazard.

(G) Manual operation of emergency drains shall be from an accessible location.

13.5.14.3 Equipment.

13.5.14.3.1 Transfer. Controls of transfer equipment shall be located so that the operator is not exposed to oil flash while the work is being lowered.

13.5.14.3.2 Temperature Control of Liquids.

(A) To prevent overheating the oil, the tank and cooling system shall be designed with the capacity to keep the oil temperature at least 50F° (28C°) below its flash point under maximum workload conditions.

(B) The cooling system shall be constructed with an external heat exchanger, and the following criteria also shall be met:

(1) The cooling system shall be controlled so that any leakage is from the oil to the water.
(2) Water-cooling coils shall not be installed within the quench tank.
(3) Loss of the controlled condition shall be alarmed.

(C) Open tanks with heating systems shall have automatic temperature control to maintain the oil at the desired working temperature, and the following criteria also shall be met:

(1) The temperature shall not exceed 50F° (28C°) below the flash point of the oil.
(2) Controls shall be interlocked to prevent starting of the heating system if the tank agitator or recirculation pump is not in operation.

(D) An excess temperature limit switch, independent of operating temperature controls, shall be provided on all quench tanks where any of the following conditions exist:

(1) The liquid surface area exceeds 10 ft^2 (1 m^2).
(2) Incoming or outgoing work is handled by conveyor.
(3) Cooling is required to maintain the oil temperature at least 50F° (28C°) below the flash point.
(4) The tank is equipped with a heating system.

(E)* The excess temperature limit switch shall be not less than 50F° (28C°) below the flash point of the oil, and the following criteria also shall be met:

(1) Operation of the excess temperature limit switch shall actuate an audible and visual alarm, shut down any quench oil heating system, and, if they are not in operation, start up oil recirculation or agitation and the tank cooling system.
(2) Where sudden stoppage cannot result in partial submergence of work, the excess temperature limit switch also shall shut down the conveyor.

Copyright 2014 National Fire Protection Association (NFPA). Licensed, by agreement, for individual use and download on October 4, 2014 to LEADER and READER for designated user PATTARAPORN SRITRAKOOL. No other reproduction or transmission in any form permitted without written permission of NFPA. For inquires or to report unauthorized use, contact licensing@nfpa.org.

13.5.14.3.3 Low Oil Level Sensor. A low oil level sensor shall be provided to sound an alarm in the event that the oil level is below the prescribed limits where any of the following conditions exist:

(1) The liquid surface area exceeds 10 ft^2 (1 m^2).
(2) Incoming or outgoing work is handled by a conveyor.
(3) The tank is equipped with a heating system.

13.5.14.3.4 Hoods. Tanks shall be provided with a noncombustible hood and vent or other means to remove vapors from the process and to prevent condensate from forming on roof structures.

(A) All vent ducts required in 13.5.14.3.4 shall be treated as flues.

(B) Hoods and ducts shall be protected with an approved automatic extinguishing system and shall be located so as not to interfere with fire protection facilities for the quench tank.

13.5.15* Molten Salt Bath Equipment.

13.5.15.1 Location and Construction.

13.5.15.1.1 Location.

(A) An area shall be allocated based on the hazards of salt bath furnaces for the installation of all salt bath equipment.

(B) Salt bath equipment shall be located either inside a cement-lined pit or within a curbed area.

(C) The pit or curbed area shall be designed to contain the contents of the molten salt in the furnace.

(D) Equipment with outer walls constructed and maintained in a manner to be salt-tight to prevent leakage if the inner wall fails shall not require curbing.

(E) Salt bath equipment shall be located so that the bath is not exposed to either leakage from overhead liquid-conveying piping (e.g., service piping, steam piping, sprinkler piping, oil piping), liquid entry through wall openings (e.g., windows, air intakes), or anticipated leakage or seepage through the roofs or floors above or shall be provided with a noncombustible hood that is designed and installed so that leakage into the molten salt is impossible.

(F) Where adjacent equipment (e.g., oil or water quench tanks) are located so that potential splashover could expose a molten salt bath, the adjacent equipment shall be provided with deflecting baffles or guards to prevent the splashover from entering the salt bath.

13.5.15.1.2 Construction.

(A) Molten salt bath equipment shall be constructed of noncombustible materials.

(B) Molten salt bath equipment shall be constructed of materials that are resistant to the corrosive action of chemical salts at the maximum design operating temperature.

(C) The design of molten salt baths and the materials selected for their construction shall minimize the possible effects of explosions, fires, spattering, and leakage, with regard for the protection of property and the safety of operating personnel.

(D) The requirements of Chapter 5 also shall apply for the construction of salt bath equipment except as specified in 13.5.15.1.1.

13.5.15.2 Salts.

13.5.15.2.1 General. For the purposes of this section, a salt shall be considered to be any chemical compound or mixture of compounds that is utilized to form a melt or fluid medium into which metal parts are immersed for processing.

13.5.15.2.2 Storage and Handling.

(A)* All salts shall be stored in covered containers that are designed to prevent the possible entrance of liquids or moisture.

(B) All storage and shipping containers shall be marked with identification of the salt (or salt mixture) they contain.

(C) Nitrate salts shall be stored in a separated, moisture-free room or area with walls, floor, and ceiling having a 2-hour fire resistance rating, located away from heat, liquids, and reactive chemicals.

(D) The nitrate salt storage room or area shall be secured to prevent entry by unauthorized personnel at all times.

(E) Only the amount of nitrate salt needed shall be removed from the storage room or area that is required for makeup or full-bath charges.

(F) Where nitrate salts have been transported to the equipment area, they shall be added to the salt bath immediately.

(G) Salt storage shall not be permitted in the equipment area.

(H) The salt bath area shall be kept clear of paper sacks or bags to avoid fires.

(I) All restrictions applying to nitrate and nitrite salts shall apply to cyanide salts.

(J) Operating procedures shall be implemented to ensure that mixing of cyanide and nitrate or nitrite salts cannot occur.

CAUTION: Mixing of cyanide and nitrate or nitrite salts can cause an explosion.

13.5.15.3 Heating Systems.

13.5.15.3.1 General. The requirements of 13.5.15.1 shall apply to the following:

(1) Molten salt baths
(2) Molten salt bath heating systems, including piping, electrodes, and radiant tubes
(3) Other equipment used to heat the molten salt bath

13.5.15.3.2 Gas and Oil Heating Systems.

(A) The design of salt bath equipment shall not permit direct flame impingement upon the wall of the salt container.

(B) Where burner immersion tubes or radiant tubes are used, the design shall prevent any products of combustion from entering the salt bath.

(C) All immersion or radiant tubes shall be fabricated of materials that are resistant to the corrosive action of the salt or salt mixture being used.

(D) All immersion tubes shall be designed so that the tube outlet is above the salt level.

(E) Where the immersion tube inlet is located below the salt bath level, the burner shall be sealed to prevent salt leakage outside the furnace.

Copyright 2014 National Fire Protection Association (NFPA). Licensed, by agreement, for individual use and download on October 4, 2014 to LEADER and READER for designated user PATTARAPORN SRITRAKOOL. No other reproduction or transmission in any form permitted without written permission of NFPA. For inquires or to report unauthorized use, contact licensing@nfpa.org.

(F) Where the immersion tube inlet is located below the salt level, the tube shall be sealed to the tank to prevent salt leakage outside the furnace.

(G) The design of molten salt bath equipment shall minimize the potential buildup of sludge and foreign materials that can result in hot spots on immersion tubes.

13.5.15.3.3 Electrical Heating Systems.

(A) Wherever immersed or submerged electrodes are used, the design shall prevent the possibility of stray current leakage (which could result in electrolytic corrosion and subsequent perforation of the wall of the salt container), and the electrodes shall be fixed or restrained to prevent possible arcing to the salt bath container or metalwork in process.

(B) Where internal resistance heating elements are used, they shall be fabricated of materials that are resistant to the corrosive action of the salt, and the salt bath shall be designed to prevent sludge buildup on the element that can result in damage from hot spots.

(C) Wherever immersed or submerged electrodes or internal resistance heating elements are used, they shall be positioned in the bath so that all heat transfer surfaces are below the salt level at all times.

13.5.15.4 Ventilation.

13.5.15.4.1* Hoods. Molten salt bath furnaces shall be provided with vented hoods constructed of noncombustible materials that are resistant to the maximum design temperature of the salt bath and the corrosive action of the salt being used.

13.5.15.4.2 Exhaust.

(A) Salt bath furnace hoods shall be provided with exhaust ductwork and a blower (mounted external to the hood) for the continuous evacuation of fumes.

(B) Where necessary for the reduction of pollution by exhaust emissions, an air washer, chemical scrubber, or fume destructor shall be installed and shall perform the required altering of the exhaust without reducing the exhaust system effectiveness.

13.5.15.5 Safety Control Equipment.

13.5.15.5.1 General.

(A) Where nitrate salts are being used, a control system shall be provided to prevent localized overheating and ignition of the salt.

(B) All immersion-type temperature-sensing elements or devices shall be selected for compatibility with the maximum design temperature and the corrosive action of the salt used.

(C) Salt bath equipment shall have visual and audible alarms that are interlocked with the safety control instrumentation.

13.5.15.5.2 Electrically Heated Salt Bath Equipment.

(A) Automatic temperature control of the heating system shall be provided.

(B) Where a step-switch transformer is used, a transformer switch interlock shall be provided to shut off power to the transformer to protect against the hazard posed by changing secondary voltage taps under load.

(C) Where transformers are cooled by forced air, a transformer airflow switch shall be provided that is interlocked to open the safety control contactor or actuate the shunt trip in the event of loss of airflow.

(D) Where water-cooled furnace electrodes are used, an interlock shall be provided to stop the flow of electricity to the electrode when the cooling-water flow falls below a predetermined minimum.

13.5.15.6 Internal Quenching Salt Tanks.

13.5.15.6.1* General. Where a salt tank is utilized for internal quenching in an internal quench furnace, the requirements of 13.5.15.6 shall apply in addition to the requirements of 13.5.15, which covers the following three types of furnaces:

(1) *Type SI* — dunk-type elevator quench
(2) *Type SII* — dunk-type elevator quench with under-salt transfer
(3) *Type SIII* — bottom chute-type quench

13.5.15.6.2 Safety Control Equipment — Type SI and Type SII.

(A)* The composition of the atmosphere in the furnace shall prevent free carbon or soot originating in the furnace atmosphere from being transferred into the quench tank.

(B) Circulation shall be provided to ensure that the maximum temperature of the salt in contact with the hot work is a minimum of 200F° (111C°) below the decomposition temperature of the salt specified by the salt manufacturer.

(C) A means shall be provided to ensure that salt cannot enter the heating chamber by capillary action on the side wall of the chute or tank.

(D) Condensation and freezing of the salt at the atmosphere interface shall be prevented by the following:

(1)*Insulating or heating the salt fill to maintain a temperature above the freezing point of the salt
(2)*Insulating the vestibule to maintain the temperature above the freezing point of the salt

(E) The design shall minimize horizontal shelves or ledges, to prevent carbon, salt, or particulates from accumulating.

(F) Each transfer chamber and discharge vestibule shall be provided with a separate atmosphere vent(s).

(G) The vent(s) shall be located such that the operators are not exposed to injury when pressure relief takes place.

(H) A pilot shall be provided at the vent outlets to ignite vented gases.

(I) In addition to the vent(s) required in 13.5.15.6.2, a pressure relief device shall be provided for the quench chamber in order to do both of the following:

(1) Keep the internal pressure from exceeding the design limits of the equipment
(2) Prevent salt overflow from the fill chute

(J) The fill chute shall be designed to prevent salt overflow at peak vestibule pressure.

13.5.15.6.3 Safety Control Equipment — Type SIII.

(A)* The composition of the atmosphere in the furnace shall prevent free carbon or soot originating in the furnace atmosphere from being transferred into the quench tank.

(B) Circulation shall be provided to ensure that the maximum temperature of the salt in contact with the hot work is a

Copyright 2014 National Fire Protection Association (NFPA). Licensed, by agreement, for individual use and download on October 4, 2014 to LEADER and READER for designated user PATTARAPORN SRITRAKOOL. No other reproduction or transmission in any form permitted without written permission of NFPA. For inquires or to report unauthorized use, contact licensing@nfpa.org.

minimum of 200F° (111C°) below the decomposition temperature of the salt as specified by the salt manufacturer.

(C) Circulation of the liquid in the chute shall be provided to ensure that the salt does not become stagnant at the liquid surface.

(D) A means shall be provided to ensure that salt cannot enter the heating chamber by capillary action on the side wall of the chute or tank.

(E) Condensation and freezing of the salt at the liquid surface shall be prevented by heating or insulating the quench chute and salt fill to maintain a temperature above the freezing point of the salt.

(F) The design shall minimize horizontal shelves or ledges, to prevent carbon, salts, or particulates from accumulating.

13.5.15.6.4 High Temperature Salt Bath Quench Tanks. Salt bath quench tanks that operate between 700°F and 1300°F (371°C and 704°C) shall utilize salts or salt mixtures that are chemically and physically stable at the operating temperatures and are nonreactive to the furnace atmospheres.

13.5.15.6.5 Low Temperature Salt Quench Tanks. Salt quench tanks operating at 350°F to 750°F (177°C to 399°C) and utilizing a combination of sodium or potassium nitrites and nitrates in conjunction with a combustible atmosphere above all or part of the salt quench surface shall be designed to provide circulation of salt in the area in which hot parts enter, to prevent temperature rise on the surface of the salt.

13.5.15.7 Cooling. Internal water-cooled coils and jackets shall not be used for cooling.

13.5.15.8* Operator Precautions.

13.5.15.8.1 Each molten salt bath installation shall have a wall chart stating which salt or salt mixtures shall be used and shall identify the maximum design operating temperature.

13.5.15.8.2 A complete operation and service manual shall be available at each salt bath furnace, and the operator shall have access to the operation manual at all times.

13.5.15.9 Precautions.

13.5.15.9.1 All items such as fixtures, tools, baskets, and parts that are to be immersed in a molten salt bath shall be made of solid bar materials and shall be completely dry.

13.5.15.9.2* The following procedures shall be performed where freezing crust exists:

(1) No attempt shall be made to break freezing crust manually while the furnace is in operation.
(2) The temperature of the bath shall be raised gradually until the crust melts.
(3) The bath temperature shall not exceed the maximum design operating temperature at any time.

13.5.15.9.3 All salt bath covers shall be in the closed position whenever the equipment is not in use.

13.5.15.9.4 All public fire department and plant emergency organizations that respond to fires and explosions within the plant shall be notified of the following:

(1) Nature of the chemical salts being used
(2) Location and operation of each molten salt bath
(3) Extinguishing and control methods that can be employed safely

13.6 Fire Protection. (Reserved)

Chapter 14 Class D Furnaces

14.1 General. (Reserved)

14.2 Location and Construction.

14.2.1 The following criteria shall apply where a vacuum chamber of a Class D furnace operates at a positive internal pressure greater than 15 psig (103.4 kPa):

(1) The vacuum chamber shall be designed and constructed in accordance with the ASME *Boiler and Pressure Vessel Code,* Section VIII, Division 1.
(2) The additional pressure due to water in the cooling jacket shall be considered in the calculating of maximum pressure differentials.

14.2.2 Vacuum Gauges and Controls.

14.2.2.1* Vacuum gauges and vacuum controls shall be selected for a particular system with consideration to vacuum level, sensitivity, and expected contamination.

14.2.2.2 Vacuum gauges shall be installed so that levels of vacuum can be ascertained in the furnace chamber and between vacuum pumps of multipump systems.

14.2.2.3 Vacuum gauge controls that operate in conjunction with sequential controls shall be interlocked to prevent damage to the furnace components or workload.

14.2.2.4 Hot wire filament gauges shall not be used at pressures above 1×10^{-1} torr (13.3 Pa) in the presence of explosive vapors or combustible atmospheres.

14.2.3 Vacuum Piping Systems.

14.2.3.1 Vacuum pipelines, valves, and manifolds shall meet the following criteria:

(1) They shall be designed to withstand differential pressures.
(2) They shall have conductance for the application.
(3) They shall have a maximum leak rate as required by the process but not greater than the leak rate specified by the furnace manufacturer.

14.2.3.2 Isolation vacuum valves shall meet the following criteria:

(1) They shall be installed between the mechanical fore pumps and the remaining system, including the furnace chamber.
(2) If powered, they shall automatically close when there is a loss of power to the fore pump or when the control switch for the fore pump is in the off position.

14.2.3.3 Where applicable, a bypass shall be provided between the furnace and roughing and the fore pump so that the chamber can be rough-pumped while the diffusion pump remains isolated.

14.2.3.4 Inlet gas quenching valves shall be designed to operate at applicable pressures on the gas side and on the vacuum side.

14.2.4 Water-Cooling Systems for Vacuum Furnaces.

14.2.4.1 For the purposes of 14.2.4, the term *water cooling system of a vacuum furnace* shall include the apparatus, equipment, and method used to cool vacuum chamber walls, electrical terminals, seals, workload, and, where applicable, the interior of the furnace.

Copyright 2014 National Fire Protection Association (NFPA). Licensed, by agreement, for individual use and download on October 4, 2014 to LEADER and READER for designated user PATTARAPORN SRITRAKOOL. No other reproduction or transmission in any form permitted without written permission of NFPA. For inquires or to report unauthorized use, contact licensing@nfpa.org.

14.2.4.2* Cold-wall vacuum furnaces shall be specifically designed to maintain the vacuum furnace vessel at the intended temperatures.

14.2.4.3 The furnace vessel walls shall be maintained below design temperature limits when the furnace operates at maximum temperatures.

14.2.4.4* Closed cooling systems shall be equipped with interlocks to prevent the heating system from operating without flow of the cooling water at the return.

14.2.4.5 If heat from the electric power terminals can damage seals during processing cycles, the terminal shall be cooled.

14.2.5* Gas Quenching Systems for Vacuum Furnaces.

14.2.5.1 The quench vessel, if separate from the heating vessel, shall be equipped with a pressure-relief valve that protects the quench vessel from gas pressure above the maximum allowable operating pressure during the backfilling, pressurizing, or cooling cycles.

14.2.5.2 Internal Heat Exchanger. Internal heat exchangers installed in the furnace chamber for the purpose of extracting heat from a recirculating cooling gas shall be protected from pressure above the maximum allowable operating pressure, heat damage, and mechanical damage while the furnace is being loaded or unloaded.

14.2.5.3 Heat exchangers, components, and connections shall be free from water leaks and air leaks.

14.2.5.4 Heat exchangers shall be installed or located to prevent damage from vibration and thermal damage due to expansion and contraction.

14.2.6* Vacuum Pumping Systems.

14.2.6.1* For the purposes of 14.2.6, the term *pumping systems* shall include pumps, valves and associated piping and wiring, related protective equipment, and measuring and control instrumentation that produce and control the level of vacuum in a vacuum furnace. *(See Annex I for general pump information.)*

14.2.6.2 Mechanical pumps utilizing hydrocarbon oils shall not be used for pumping gases with oxygen contents greater than 25 percent by volume.

14.2.6.3* Diffusion pumps and other pumps employing a heating source shall include thermostats or other automatic temperature-controlling devices.

14.2.6.4 A fluid level gauge shall be installed on those diffusion pumps with a pump fluid capacity over 1 qt (0.95 L).

14.2.6.5 Where petroleum or other combustible fluids are used, the pumping system shall be designed to minimize the possibility of fluid release that might result in a fire or an explosion.

14.2.6.6 Cooling shall be provided for diffusion pumps to prevent excess vapors from backstreaming into furnace chambers and for mechanical pumps to prevent overheating of the pump fluids.

14.2.7 Pump Vents.

14.2.7.1 Mechanical vacuum pumps with a capacity larger than 15 ft^3/min (7×10^{-3} m^3/sec) shall be vented to an approved location in accordance with all applicable codes.

14.2.7.2 An oil drip leg in accordance with the vacuum pump manufacturer's recommendation shall be designed into the vent piping system.

14.2.7.3 Vent piping shall be free from gas leaks or oil leaks and shall be of noncombustible pipe construction.

14.2.7.4 An oil mist separator shall be provided where the discharge vapor accumulations create a hazard.

14.2.8 Heat Baffles and Reflectors for Vacuum Furnaces.

14.2.8.1 Baffles, reflectors, and hangers shall be designed to minimize warpage due to expansion and contraction to prevent furnace damage.

14.2.8.2 Baffles, reflectors, and hangers shall be of heat-resistant material that minimizes sag, rupture, or cracking under normal operating limits specified by the manufacturer to prevent furnace damage.

14.2.8.3 Baffles and reflectors shall be accessible and removable for the purpose of cleaning and repairing.

14.2.9 Heating Elements for Vacuum Furnaces.

14.2.9.1* The design of heating elements can take several forms, such as rods, bars, sheets, or cloth, but shall be limited to materials that do not vaporize under minimum vacuum and maximum temperature.

14.2.9.2 Material for heating elements shall have a vapor pressure lower than the lowest design pressure at the manufacturer's specified maximum design temperature.

14.2.9.3 Electrical heating equipment in a vacuum furnace shall not be operable until a vacuum level established as part of the furnace design has been attained inside the furnace chamber to provide protection for the furnace elements, radiant shields, or insulation.

14.2.9.4* Heating element support hangers and insulators shall be of compatible materials to provide electrical insulation and nonreacting materials at specified vacuum levels and temperatures.

14.2.9.5 Heating element connections shall be designed to minimize arcing and disassembly problems.

14.2.9.6 The heating element power terminal and vessel feed-through shall be designed and installed for vacuum integrity and to withstand heating effects.

14.2.9.7 Power terminal connection points to power supply cables shall be covered or housed to prevent high current electrical hazard to personnel.

14.2.10* Furnace Thermal Insulation and Heat Shields for Vacuum Furnaces.

14.2.10.1* Insulation shall not break down at maximum specified vacuum levels and temperatures.

14.2.10.2 Internal electrical insulation material shall remain nonconductive through the full range of vacuum and temperature limits specified by the manufacturer.

14.2.10.3* Heat shield material shall comply with temperature and vacuum requirements.

14.2.10.4* Insulation shall be installed so as to prevent it from breaking up and becoming airborne.

14.3 Heating Systems. (Reserved)

Copyright 2014 National Fire Protection Association (NFPA). Licensed, by agreement, for individual use and download on October 4, 2014 to LEADER and READER for designated user PATTARAPORN SRITRAKOOL. No other reproduction or transmission in any form permitted without written permission of NFPA. For inquires or to report unauthorized use, contact licensing@nfpa.org.

14.4 Commissioning, Operations, Maintenance, Inspection, and Testing. (Reserved)

14.5 Safety Equipment.

14.5.1 Vacuum Furnace Safety Controls and Equipment.

14.5.1.1 Pressure controls shall be installed on all Class D vacuum furnaces to prevent the pressure from exceeding the maximum design pressure of the vessel.

14.5.1.2* Vacuum gauges shall be selected to measure the expected lowest pressure achievable by the vacuum system and shall be installed to do the following:

(1) Measure pressures in the chamber
(2) Measure pressures in the piping between the diffusion pump foreline and the foreline valve on diffusion pumped systems

14.5.1.3 The vacuum vessel shall be equipped with a pressure relief valve that protects the vessel, attachments, and doors from gas pressure exceeding the vessel design pressure during the backfilling, pressurizing, or cooling cycles.

14.5.1.4* Automatic valves shall be provided to close the holding pump, foreline, roughing, and main vacuum valves in the event of the failure of a power supply or other valve-actuating medium.

14.5.1.5 Valves or pilot operators for valves whose inadvertent actuation could result in a hazardous condition shall have the manual actuation feature protected against unauthorized operation.

14.5.1.6* A warning label stating the maximum temperature for servicing pumps shall be affixed to diffusion pumps to minimize the risk of pump oil ignition.

14.5.1.7 Electron Beam Melter Safety Controls.

14.5.1.7.1* Water cooling shall be constructed so as to prevent steam pockets from forming in confined areas.

14.5.1.7.2* Beam gun controls shall be designed so they do not allow the beam to become fixed on one spot.

14.5.1.7.3 All sight ports shall be covered with dark glass for eye protection purposes.

14.5.1.7.4 For the purposes of equipment and personnel protection, alternative, emergency cooling-water sources shall be considered.

14.5.1.7.5* Protection shall be provided to prevent personnel from being exposed to high voltage and X-ray.

14.5.2 Integral Liquid Quench Vacuum Furnaces.

14.5.2.1* General Requirements.

14.5.2.1.1 The cooling medium shall maintain the quench vestibule interior at a temperature that prevents condensation.

14.5.2.1.2 The quench vestibule shall be vacuumtight.

14.5.2.1.3 If an intermediate door between the furnace and the quench vestibule is provided, the following shall apply:

(1) The door shall be closed during the quenching operation to serve as a radiation baffle.
(2) An alarm shall be installed to notify the operator if the door does not close.

14.5.2.2 Construction of Quenching Tanks.

14.5.2.2.1 The quench tank shall be designed and constructed to contain the quench medium capacity at the expected operating temperature and with maximum workload volume.

(A) Where the elevator and workload are submerged, the quench tank shall be designed and operated with a maximum quench medium level of not less than 6 in. (150 mm) below the door or any opening into the furnace.

(B) The quench tank shall be designed for a minimum quench medium capacity, without the operation of the cooling system, to quench a maximum gross load such that the maximum quenching medium temperature is not less than 50°F (28°C) below its flash point.

14.5.2.2.2* Base materials, weld filler materials, and welding procedures used for the tank fabrication shall be selected to provide resistance to corrosion by the cooling medium.

14.5.2.3 Elevators.

14.5.2.3.1 The elevator shall be designed to immerse the work charge in the quench medium with minimum splashing.

14.5.2.3.2 The elevator and elevating mechanism shall be designed to handle the maximum rated loads.

14.5.2.3.3 Elevator guides shall be provided to ensure uniform stabilized movement of the elevator.

14.5.2.3.4 Tray guides or stops shall be provided to ensure that the tray is in position on the elevator.

14.5.2.4 Cooling Systems.

14.5.2.4.1* The cooling system shall be capable of maintaining the quench medium temperature within operating range at minimum quench intervals at maximum gross loads.

14.5.2.4.2 Heat Exchanger Within Quench Tank.

(A) The heat exchanger shall be constructed of materials that will not be corroded by either the cooling medium or the quench medium.

(B)* After installation in a quench tank, the heat exchanger shall be subjected to a minimum pressure test of 150 percent of the maximum designed working pressure.

(C) The heat exchanger shall be located within the quench tank so as to prevent mechanical damage by the elevator or the load to be quenched.

(D) The cooling medium flow shall be controlled by an automatic temperature controller with its temperature sensor located in the quench medium.

(E) A pressure relief device shall be provided to protect the heat exchanger, with relief piped to a location where it will not cause injury to personnel or damage to equipment or buildings.

(F) Water shall not be used as a cooling medium within a quench tank that uses a combustible liquid quench medium.

14.5.2.4.3 External Liquid-Cooled Heat Exchanger.

(A) Heat exchanger tubes that are exposed to water shall be constructed of corrosion-resistant materials.

(B)* The heat exchanger shall be subjected to a minimum pressure test of 150 percent of the maximum designed working pressure.

Copyright 2014 National Fire Protection Association (NFPA). Licensed, by agreement, for individual use and download on October 4, 2014 to LEADER and READER for designated user PATTARAPORN SRITRAKOOL. No other reproduction or transmission in any form permitted without written permission of NFPA. For inquires or to report unauthorized use, contact licensing@nfpa.org.

(C) The pressure of the quench medium through the heat exchanger shall be greater than the coolant pressure applied.

(D) A differential pressure switch shall be provided and interlocked with the quench cycle.

(E) A pressure relief device shall be provided to protect the heat exchanger, with relief piped to a location where it cannot cause injury to personnel or damage to equipment or buildings.

14.5.2.4.4 External Air-Cooled Heat Exchanger System.

(A) External air-cooled heat exchangers installed outdoors shall be designed and installed to withstand anticipated wind and other natural forces.

(B) External air-cooled heat exchangers that are installed outdoors or that utilize supplemental water-cooling shall be constructed of materials that are able to withstand corrosion.

(C) An external heat exchanger installed outdoors shall be provided with lightning protection if located in an exposed, rooftop location.

(D) If the air-cooled heat exchanger is installed in a rooftop location, it shall be installed in a curbed or diked area and drained to a location that will not create a hazard.

14.5.2.5 Electric Immersion Heaters.

14.5.2.5.1 Electric immersion heaters shall be of sheath-type construction.

14.5.2.5.2 Heaters shall be installed so that the hot sheath is fully submerged in the quench medium at all times.

14.5.2.5.3 The quench medium shall be supervised by a temperature controller arranged to maintain the quench medium within the operating temperature range.

14.5.2.5.4 The electrical heating system shall be interlocked with the quench medium agitation or recirculation system to prevent localized overheating of the quench medium.

14.5.2.6 Internal Quench Vacuum Furnaces — Additional Safety Controls.

14.5.2.6.1 Where a vacuum furnace has an internal liquid quench chamber, in addition to the safety controls in Chapter 8 and Section 14.5, the controls specified in 14.5.2.6.2 through 14.5.2.6.11 shall be provided.

14.5.2.6.2 Automatic temperature controls shall be installed in pressure-type water-cooling and oil-cooling systems to ensure the desired jacket temperature.

14.5.2.6.3 Where an external door adjacent to the quench chamber is provided, the following shall apply:

(1) The operation of the door shall be interlocked so that it cannot be opened unless the elevator is in its full loading or quenching position.
(2) A manual override shall be permitted to be used in emergencies.

14.5.2.6.4 Controls for admittance and maintenance of special atmosphere within the quench chamber shall conform to the controls described in 14.5.3.1.

14.5.2.6.5 The quench reservoir shall be equipped with a quench medium level indicator.

14.5.2.6.6 Where a sight glass–type quench medium level indicator is installed, the indicator shall be of heavy-duty construction and protected from mechanical damage.

14.5.2.6.7 Where the furnace includes an elevating quench rack, a limit switch shall be interlocked to the load transfer system to prevent transfer of the load in the heat chamber to the quench rack unless the quench rack is in the correct position to receive the load.

14.5.2.6.8 The quench tank shall be equipped with a low liquid level device arranged to sound an alarm, prevent the start of quenching, and shut off the heating medium in case of a low liquid level condition.

14.5.2.6.9 Excess temperature limit control shall be installed and interlocked to shut off the quench heating medium automatically and shall require operator attention in case the quench medium temperature exceeds a predetermined temperature.

(A) Excess temperature limit control shall be interlocked to prevent the start of quenching in case of excessive quench medium temperature.

(B) Audible and visual alarms shall be provided.

14.5.2.6.10 Where agitation of the quench medium is required to prevent overheating, the agitation shall be interlocked to prevent quenching until the agitator has been started.

14.5.2.6.11 A means shall be provided to sample for water in quench oil.

(A)* Laboratory testing shall be permitted to be used to determine the existence of water in quench oil.

(B)* Quench oil shall be tested for water content whenever there is a possibility that water has contaminated the quench oil system.

(C)* Quenching operations shall be prohibited until the water contamination is corrected and confirmed by test.

14.5.3 Vacuum Furnaces Used with Special Flammable Atmospheres.

14.5.3.1 Safety Controls and Equipment. The requirements of 14.5.3 shall apply to any vacuum chamber or vacuum furnace in which flammable gas is used at a pressure of 50 percent or more of its lower flammable limit (LFL) in air.

14.5.3.1.1 A minimum supply of inert purge gas equal to five times the total vacuum system volume shall be available during operation with flammable atmospheres.

14.5.3.1.2 The purge gas supply shall be connected to the vacuum chamber through a normally open valve.

(A) A pressure sensor shall monitor the purge gas line pressure and shall stop the supply of flammable gas if the pressure becomes too low to allow purging in accordance with 14.5.3.1.1.

(B) Any manual inert purge gas shutoff valves shall be proved open through the use of a position monitoring switch and interlocked to prevent the introduction of flammable gas.

14.5.3.1.3 Flammable Gas Supply.

(A) The flammable gas supply shall be connected to the vacuum chamber through a normally closed automatic safety shutoff valve.

Copyright 2014 National Fire Protection Association (NFPA). Licensed, by agreement, for individual use and download on October 4, 2014 to LEADER and READER for designated user PATTARAPORN SRITRAKOOL. No other reproduction or transmission in any form permitted without written permission of NFPA. For inquires or to report unauthorized use, contact licensing@nfpa.org.

(B) Vacuum furnaces that rely on a partial vacuum to hold the door closed shall have the flammable gas supply connected to the vacuum chamber through two normally closed automatic safety shutoff valves.

(C) A manual shutoff valve shall be provided in all flammable atmosphere supply pipe(s).

14.5.3.1.4 The flammable gas supply system shall be interlocked with the vacuum system to prevent the introduction of any flammable atmosphere until the furnace has been evacuated to a level of 1×10^{-1} torr (13.3 Pa) or less.

14.5.3.1.5 High and low pressure switches shall be installed on the flammable gas line and shall be interlocked to shut off the supply of gas when its pressure deviates from the design operating range.

14.5.3.1.6* In the case of a multiple chamber–type or continuous-type vacuum furnace, the following criteria shall apply:

(1) Each chamber shall be regarded as a separate system.
(2) Interlocks shall be provided that prevent the valves from opening between adjacent interconnecting chambers once a flammable atmosphere has been introduced into any of them.

14.5.3.1.7 The vacuum pumping system shall be interlocked with the supply gas system so that mechanical pumps continue to operate while flammable gas is in the vacuum chamber, to prevent the backflow of air through nonoperating pumps.

14.5.3.1.8 The following shall be piped to a source of inert gas:

(1) Mechanical pump gas ballast valves
(2) Vacuum air release valves on roughing or forelines

14.5.3.1.9 Manual air release valves shall not be permitted.

14.5.3.1.10 Vacuum furnaces that rely on a partial vacuum to hold the door closed shall incorporate a pressure switch, independent of the chamber pressure control device, to terminate flammable gas addition before the backfill pressure rises to a point where door clamping is lost.

14.5.3.1.11 Vacuum furnaces that are backfilled with flammable gases to pressures greater than that required to hold the door closed shall incorporate clamps and seals to ensure the door is tightly and positively sealed.

14.5.3.1.12* Sight glasses, where provided, shall be valved off before operation with flammable gases, except for sight glasses used solely for pyrometers.

14.5.3.2 Flammable Gases.

14.5.3.2.1 During processing, flammable gases shall be exhausted from vacuum furnaces by pumping them through the vacuum pumps or by venting in continuous flow to the atmosphere.

14.5.3.2.2 If the flammable gas is exhausted through a vacuum pump, the system shall be designed to prevent air backflow if the pump stops.

14.5.3.2.3 Venting of the vacuum pump shall be in accordance with 14.2.7, and one of the following actions shall be taken during flammable gas operation:

(1) The pump discharge shall be diluted with inert gas to lower the combustible level of the mixture below the LFL.
(2) The pump discharge shall be passed through a burner.

14.5.3.2.4 If the flammable gas is vented to the atmosphere directly without passing through the vacuum pumps, the vent line shall be provided with a means of preventing air from entering the furnace chamber.

14.5.3.2.5 If the flammable gas is vented to the atmosphere through a burner, the vent line shall be provided with a means of preventing air from entering the furnace chamber, and the following criteria also shall apply:

(1) The existence of the burner ignition source shall be monitored independently.
(2) Interlocks shall be provided to shut off the flammable gas supply and initiate inert gas purge if the flame is not sensed.

14.5.3.2.6 Where flammable gas is used to maintain chamber pressure above atmospheric pressure, the following criteria shall be met:

(1) A pressure switch shall be interlocked to close the flammable gas supply if the chamber pressure exceeds the maximum operating pressure.
(2) The pressure switch shall be independent of the chamber pressure control device.

14.5.3.2.7 Where flammable gas is used to maintain chamber pressure above atmospheric pressure, the following criteria shall be met:

(1) A pressure switch shall be interlocked to close the flammable gas supply and initiate purge if the chamber pressure drops below the minimum operating pressure.
(2) The pressure switch shall be independent of the chamber pressure control device.

14.5.3.2.8 Where flammable gas is exhausted through a vent (not through the pump), the vent valve shall not open until a pressure above atmosphere is attained in the chamber.

14.5.3.3 Purging.

(A) When purge is initiated, the flammable gas valve(s) shall be closed.

(B) Purging shall be complete when any of the following criteria is satisfied:

(1) Two consecutive analyses of the vent gas from the furnace indicate that less than 50 percent of the LFL has been reached.
(2) Five furnace volume changes with inert gas have occurred.
(3) The furnace is pumped down to a minimum vacuum level of 1×10^{-1} torr (13.3 Pa) prior to inert gas backfill.

14.5.3.4* Emergency Shutdown Procedure. In the event of an electrical power failure or flammable gas failure, the system shall be purged in accordance with 14.5.3.3.

14.5.4* Bulk Atmosphere Gas Storage Systems — Construction. All storage tanks and cylinders shall comply with local, state, and federal codes relating to pressures and type of gas.

14.5.5 Vacuum Induction Furnaces.

14.5.5.1 Design and Construction.

14.5.5.1.1 The furnace chamber design shall take into account the heating effect of the induction field and shall be sized and constructed of materials to minimize the heating effect on the walls.

Copyright 2014 National Fire Protection Association (NFPA). Licensed, by agreement, for individual use and download on October 4, 2014 to LEADER and READER for designated user PATTARAPORN SRITRAKOOL. No other reproduction or transmission in any form permitted without written permission of NFPA. For inquires or to report unauthorized use, contact licensing@nfpa.org.

14.5.5.1.2* Where water is used as a cooling medium, the main water control valve shall remain open in the event of a power failure so that cooling water continues to flow to the furnace.

14.5.5.1.3 Where a coil or coils having multiple sections or multiple water pads are used, such coils or pads shall have separately valved water circuits to ensure continuity of cooling in the event of a water leak.

14.5.5.1.4 Water-cooled induction leads shall be designed to minimize any work hardening as a result of movement.

14.5.5.1.5 Wherever an elevator is used, the elevating mechanism shall be designed to handle the maximum loads.

(A) Elevator guides shall be provided to ensure uniform stabilized movement.

(B) In furnaces used for melting, the elevator mechanism shall be shielded from spillage of molten metal.

14.5.5.2* Heating Systems.

14.5.5.2.1 For the purpose of 14.5.5, the term *heating system* shall include an electrical power supply, an induction coil, and related hardware.

14.5.5.2.2* All components, excluding induction coils, shall be grounded.

14.5.5.2.3* The geometry of the coil and its placement with respect to the susceptor or load shall be designed for the operating temperature required for the process.

14.5.5.2.4* The electrically energized induction coil shall be supported so that it does not come into contact with the susceptor, work pieces, fixtures, or other internal furnace components.

14.5.5.2.5* The electrical insulation of the induction coil, coil supports, and coil separators shall withstand exposure to specified temperature, vacuum levels, operating voltage, and operating frequency.

14.5.5.2.6 The choice and sizing of the thermal insulation shall be determined by operating temperature, vacuum level, and compatibility with the process.

14.5.5.3 Safety Controls.

14.5.5.3.1 All electrical safety controls and protective devices required for induction systems in *NFPA 70*, *National Electrical Code*, shall apply.

14.5.5.3.2 Where an open water-cooling system is used, an open sight drain shall be provided for visible indication of waterflow in the cooling line of the induction coil.

14.5.5.3.3 The flow of the cooling water shall be interlocked at the discharge of each induction coil circuit to shut down the power in the event of inadequate flow.

14.5.5.3.4* Temperature sensors at the outlet of the cooling system shall be interlocked to shut down the heating power in the event that the temperature of the cooling water is above the maximum operating temperature, as specified by the equipment design.

14.5.5.3.5 A molten metal leak detector that sounds an alarm indicating a molten metal leak shall be installed on all vacuum induction melting furnaces where the capacity for melting is more than 500 lb (227 kg) of metal.

14.5.5.3.6 A ground-fault detection device shall be provided and installed on the induction coil itself to sound an alarm and shut off power in the event of a ground fault.

14.5.5.3.7 Where an elevator is used in a vacuum induction melting furnace, the external door operation shall be interlocked so that it cannot be opened unless the elevator is in the correct position.

14.5.5.3.8 Wherever an elevator is used in a vacuum induction melting furnace, the crucible shall be interlocked so that it cannot be in the pour position unless the elevator is in the correct position.

14.5.6 Fire Protection. (Reserved)

Annex A Explanatory Material

Annex A is not a part of the requirements of this NFPA document but is included for informational purposes only. This annex contains explanatory material, numbered to correspond with the applicable text paragraphs.

A.1.1 Explosions and fires in fuel-fired and electric heat utilization equipment constitute a loss potential in life, property, and production. This standard is a compilation of guidelines, rules, and methods applicable to the safe operation of this type of equipment.

Conditions and regulations that are not covered in this standard — such as toxic vapors, hazardous materials, noise levels, heat stress, and local, state, and federal regulations (EPA and OSHA) — should be considered in the design and operation of furnaces.

Most failures can be traced to human error. The most significant failures include inadequate training of operators, lack of proper maintenance, and improper application of equipment. Users and designers must utilize engineering skill to bring together that proper combination of controls and training necessary for the safe operation of equipment. This standard classifies furnaces as follows:

(1) *Class A ovens and furnaces* are heat utilization equipment operating at approximately atmospheric pressure wherein there is a potential explosion or fire hazard that could be occasioned by the presence of flammable volatiles or combustible materials processed or heated in the furnace. Such flammable volatiles or combustible materials can originate from any of the following:
   (a) Paints, powders, inks, and adhesives from finishing processes, such as dipped, coated, sprayed, and impregnated materials
   (b) Substrate material
   (c) Wood, paper, and plastic pallets, spacers, or packaging materials
   (d) Polymerization or other molecular rearrangements

   Potentially flammable materials, such as quench oil, waterborne finishes, cooling oil, and cooking oils, that present a hazard are ventilated according to Class A standards.
(2) *Class B ovens and furnaces* are heat utilization equipment operating at approximately atmospheric pressure wherein no flammable volatiles or combustible materials are being heated.
(3) *Class C ovens and furnaces* are those in which there is a potential hazard due to a flammable or other special atmosphere being used for treatment of material in process. This type of

Copyright 2014 National Fire Protection Association (NFPA). Licensed, by agreement, for individual use and download on October 4, 2014 to LEADER and READER for designated user PATTARAPORN SRITRAKOOL. No other reproduction or transmission in any form permitted without written permission of NFPA. For inquires or to report unauthorized use, contact licensing@nfpa.org.

furnace can use any type of heating system and includes a special atmosphere supply system(s). Also included in the Class C classification are integral quench furnaces and molten salt bath furnaces.

(4) *Class D furnaces* are vacuum furnaces that operate at temperatures that exceed ambient to over 5000°F (2760°C) and at pressures from vacuum to several atmospheres during heating using any type of heating system. These furnaces can include the use of special processing atmospheres. During gas quenching, these furnaces can operate at pressures from below atmospheric to over a gauge pressure of 100 psi (690 kPa).

A.1.1.2 The following types of industrial systems are generally considered to be among those covered by NFPA 86 where the fuel is covered by the standard: afterburners, ammonia dissociators, annealing furnaces, atmosphere generators (endothermic, exothermic), autoclaves, bakery ovens, batch furnaces, bell furnaces, belt furnaces, blast furnaces, brazing furnaces, brick kilns, car-bottom kilns, casting furnaces, catalytic thermal oxidizers, cement kilns, chemical vapor deposition furnaces, crematories, crucible furnaces, cupola furnaces, drying ovens, electron beam melters, flameless thermal oxidizers, fume incinerators, glass melting furnaces, heat treating furnaces, heating cover furnaces, indirect-fired furnaces, induction furnaces, inert-atmosphere furnaces, integral quench furnaces, kilns, lime kilns, melting kettles/pots, muffle furnaces, open hearth furnaces, ovens, oxygen-enriched furnaces, paint drying ovens, paper drying ovens, plasma melting furnaces, pusher furnaces, reduction furnaces, refining kettles, regenerative thermal oxidizers, reheat furnaces, retort furnaces, reverberatory furnaces, roasting ovens, rotary calciners, rotary dryers, rotary kilns, shaft furnaces, shaft kilns, shuttle kilns, sintering furnaces, slag furnaces, smelting furnaces, solvent atmosphere ovens, special atmosphere furnaces, sweat furnaces, textile dryers, thermal oxidizers, tube furnaces, tunnel kilns, vacuum furnaces, vaporizers, and wood-drying kilns.

A.1.1.6 Vacuum furnaces generally are described as cold-wall furnaces, hot-wall furnaces, or furnaces used for casting or melting of metal at high temperatures up to 5000°F (2760°C). There can be other special types.

For more detailed information on the various types of furnaces, see Table A.1.1.6. See Figure A.1.1.6(a) through Figure A.1.1.6(c) for examples of a cold-wall, horizontal, front-loading vacuum furnace; a cold-wall, induction-heated vacuum furnace; and a hot-wall, single-pumped, retort vacuum furnace.

Plasma Melting. Plasma melting is a process by which metal solids, powders, chips, and fines are consolidated into ingot or slab form. Melting is accomplished by use of an ionized gas that transfers heat from the plasma torch to the material. The gas might be oxidizing, reducing, or inert, depending on the process requirements. The temperature of the plasma gas is in excess of 3632°F (2000°C). Material consolidation might be in the form of an ingot, usually extracted from the bottom of the melt chamber, or a slab that is removed horizontally from the melt chamber.

The melt chamber operating pressure might vary from 10^{-2} atmospheres to 2 atmospheres, making the process suitable for a wide variety of metals and alloys. Cleaning and refinement of the material might be accomplished by the use of hearth melting, stirring action by torch manipulation, inductive stirring coils, or vacuum/pressure cycling of the melt chamber.

The melt chamber, torches, copper hearths, consolidation containment system, and power supplies are water cooled. Each water-cooled circuit is monitored for low flow and high temperature, with alarms for all circuits, power disruption for critical circuits, or both.

Solid-state power supplies are utilized to provide power to the torches, which range in size from 47 Btu/hr (50 kW) for a small research unit to multiple torches of 948 Btu/hr (1000 kW) each for large production melters. The torches provide *x*, *y*, and *z* movements that are programmable or computer controlled. *[See Figure A.1.1.6(d).]*

Electron-Beam (EB) Melting. Of all commercial melting techniques, electron-beam (EB) melting is capable of producing the highest refinement of end product. The beam of the electron gun can be focused to produce heat intense enough to vaporize even those metals with the highest melting points. Where combined with a vacuum atmosphere of approximately 10^{-4} torr (1.3×10^{-6} Pa), most impurities can be separated from the product being melted. EB melting is especially suited for refining refractory metals and highly reactive metals, but it also has applications in melting alloy steels.

Commercial EB melters are available in a variety of sizes and configurations. Figure A.1.1.6(e) illustrates a vertical feed system that allows the molten metal to drop from the feed stock into a water-cooled copper retention hearth, where the molten metal is further refined by the oscillating beams of the two guns. The retention time of the metal in the hearth is controlled by adjusting the melt rate of the feedstock. The metal flows over a weir at the end of the hearth and falls into a water-cooled chill ring, where it solidifies into a billet as it is withdrawn downward from the chamber. Vaporized impurities condense on the cold inner walls of the vacuum chamber or on special collector plates that are easily removed for cleaning. Because of the intense heat needed for the melting and refining process, the vacuum chamber is usually of double-wall construction so that large quantities of cooling water can circulate through the passages of the chamber.

Vacuum Arc Melting and Vacuum Arc Skull Casting. Vacuum arc melting is a high-volume production method for alloying and refining metals. Alloys can be produced by sandwiching and welding strips of different metals together to produce an electrode that, after melting, results in the desired alloy. Second and third melts are sometimes necessary to refine the alloy. Most arc melters are of the consumable electrode type; however, nonconsumable electrode melters are commercially available. Figure A.1.1.6(f) illustrates the principal components of one type of consumable electrode arc melter.

In operation, dc voltage potential is established between the stinger rod, which has the electrode attached to it, and the water-cooled copper melt cup. The stinger rod is driven down until an arc is established between the electrode and a metal disk placed in the bottom of the melt cup. Once the arc has stabilized and melting begins, the voltage might be reduced, thus shortening the arc length and lessening the possibility of arcing to the water-cooled sidewall of the cup.

Automatic control systems are available for controlling the arc length and melt rates. A mechanical booster pumping system provides vacuum operating levels of approximately 10^{-2} torr (1.3×10^{-4} Pa). Water-cooling circuits are provided for the stinger rod, head, melt cup, solid-state power supply, cables and connections, and vacuum pumping system.

Copyright 2014 National Fire Protection Association (NFPA). Licensed, by agreement, for individual use and download on October 4, 2014 to LEADER and READER for designated user PATTARAPORN SRITRAKOOL. No other reproduction or transmission in any form permitted without written permission of NFPA. For inquires or to report unauthorized use, contact licensing@nfpa.org.

Table A.1.1.6 Vacuum Furnace Protection

Operating and Subject Safety Devices	Cold Wall			Hot Wall		Casting and Melting			
	Induction	Resistance	Electron Beam	Gas-Fired	Electric	Induction	Electron Beam	Electric Arc	Plasma Arc
A. Vacuum System	yes	yes	yes	yes	yes	yes	yes	yes	yes
Vacuum chamber	yes	yes	yes	yes	yes	yes	yes	yes	yes
Roughing pump	yes	yes	yes	yes	yes	yes	yes	yes	yes
Diffusion pump	op	op	yes	op	op	op	yes	op	no
Holding pump	op	op	op	op	op	op	op	op	no
Retort	no	no	no	yes	yes	no	no	no	no
Multichamber	op	op	op	op	op	op	op	op	op
Internal fan (temp. uniformity)	no	op	no	op	op	no	no	no	no
B. Heating System	yes	yes	yes	yes	yes	yes	yes	yes	yes
High voltage	no	no	yes	no	no	no	yes	yes	yes
High current	yes	yes	no	no	yes	yes	yes	yes	yes
C. Cooling System									
Work cooling	yes	yes	yes	op	op	op	op	no	yes
Gas quench	op	op	op	op	op	op	op	no	no
Oil quench	op	op	no	no	no	no	no	no	no
Water quench	op	op	no	no	no	no	op	no	no
Fans, blower	op	op	op	op	op	op	op	no	op
Port-bungs	op	op	op	op	op	no	no	no	op
External-internal heat exchanger	op	op	op	op	op	op	op	op	op
Water-cooling equipment	yes	yes	yes	yes	yes	yes	yes	yes	yes
D. Process Atmosphere Cycle									
Hydrogen	op	op	no	op	op	no	no	no	op
Nitrogen	op	op	no	op	op	no	no	no	op
Methane	op	op	no	op	op	no	no	no	op
Argon	op	op	no	op	op	no	no	no	yes
Helium	op	op	no	op	op	no	no	no	op
E. Material Handling									
Internal	yes	yes	yes	yes	yes	yes	yes	yes	yes
External	yes	yes	yes	yes	yes	yes	yes	yes	yes
F. Instrument Controls									
Temperature	yes	yes	yes	yes	yes	yes	yes	yes	yes
Vacuum	yes	yes	yes	yes	yes	yes	yes	yes	yes
Pressure	yes	yes	yes	yes	yes	yes	yes	yes	yes
Flow	yes	yes	yes	yes	yes	yes	yes	yes	yes
Electrical	yes	yes	yes	yes	yes	yes	yes	yes	yes
G. Hazards of Heating System									
Gas-fired	no	no	no	yes	no	no	no	no	no
Electric heated	yes	yes	yes	no	yes	yes	yes	yes	yes
Cooling water to be circulating	yes	yes	yes	yes	yes	yes	yes	yes	yes
Overheating	yes	yes	yes	yes	yes	yes	yes	yes	yes
Steam buildup	yes	yes	yes	yes	yes	yes	yes	yes	yes
Diffusion pump element	yes	yes	yes	yes	yes	op	yes	op	no
Pump element overheating	yes	yes	yes	yes	yes	op	yes	op	no
Accumulation of air	yes	yes	yes	yes	yes	yes	yes	yes	yes
Hydrogen accumulation	op	op	op	op	op	no	no	no	no
Other combustibles	no	no	no	no	no	no	no	no	no
Water in oil explosion	no	yes	no	no	yes	no	no	no	no
Radiation	no	no	yes	no	no	no	yes	yes	yes
Water sentinel	yes	yes	yes	yes	yes	yes	yes	yes	yes
Electrical short safety shutdown	yes	yes	yes	—	yes	yes	yes	yes	yes
H. Personnel Safety Hazards	yes	yes	yes	yes	yes	yes	yes	yes	yes

Yes: Equipment provided or condition present. Op: Optional; there might be a choice.

Copyright 2014 National Fire Protection Association (NFPA). Licensed, by agreement, for individual use and download on October 4, 2014 to LEADER and READER for designated user PATTARAPORN SRITRAKOOL. No other reproduction or transmission in any form permitted without written permission of NFPA. For inquires or to report unauthorized use, contact licensing@nfpa.org.

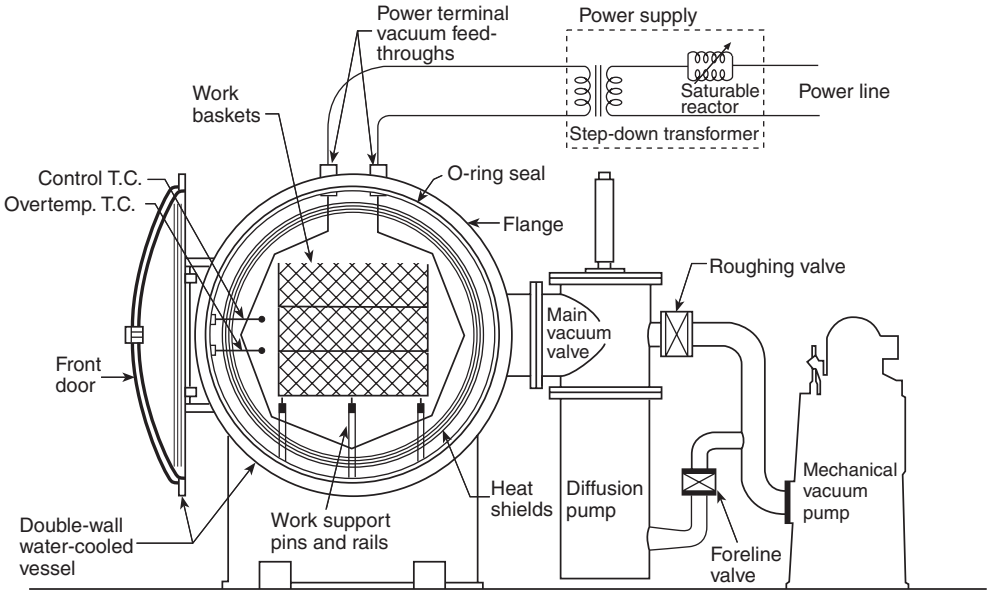

FIGURE A.1.1.6(a) Example of a Cold-Wall, Horizontal, Front-Loading Vacuum Furnace.

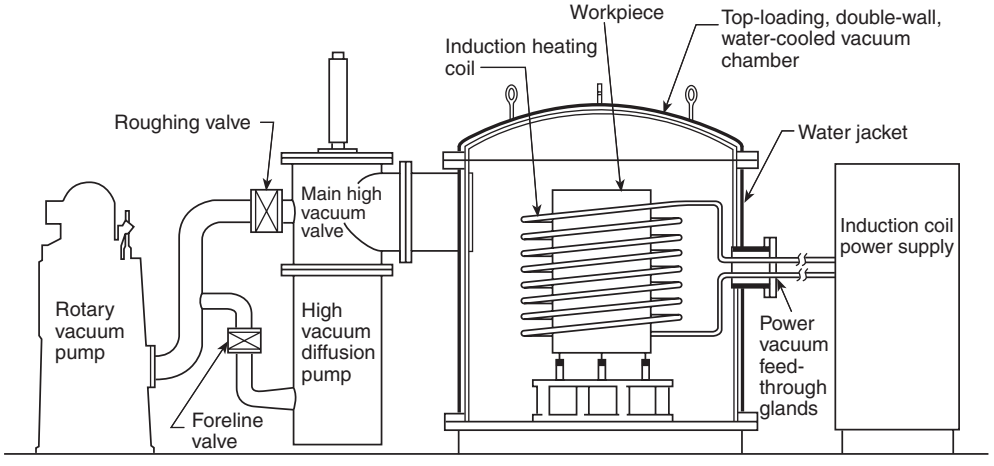

FIGURE A.1.1.6(b) Example of a Cold-Wall, Induction-Heated Vacuum Furnace.

The vacuum arc skull caster is a variation of the vacuum arc melter, with the essential difference that, instead of melting the electrode into a copper cup and allowing the molten metal to solidify, the electrode is melted into a cold-wall copper crucible. The crucible then is tilted, allowing the molten metal to pour into a casting mold, leaving a solidified metal lining, or "skull," in the crucible.

Burn-throughs into water jackets, which allow water to come in contact with hot metal, are not uncommon in arc melting. Equipment damage can be minimized by providing overpressure-relief ports, reliable cooling water sources, well-designed and monitored cooling circuits, and well-trained operators. Blast protection walls are frequently installed for personnel protection.

A.1.1.7(1) Designing coal or other solid fuel–firing systems requires special knowledge and experience with such solid fuel systems. As an example, different types of coal (anthracite vs. sub-bituminous) — and other solid fuels such as petroleum coke, wood chips, sawdust, other biomass, and combustible dusts such as medium density fiberboard dust — can introduce significantly different hazards and require significantly different handling systems and fuel delivery systems.

Solid fuels present unique burner control challenges. For example, there might be challenges selecting and arranging flame supervision devices, selecting the method of fuel preparation and delivery, and determining actions to take in an emergency shutdown.

The best guidance from NFPA for coal-fired systems (pulverized or aggregate) is NFPA 85, *Boiler and Combustion Systems Hazards Code*. Another resource is FM Global Property Loss Prevention Property Loss Prevention Data Sheet 6-17, "Rotary Kilns and Dryers." Burning of other solid fuels is less standardized. An available resource is FM Global Property Loss Prevention Data Sheet 6-13, "Waste Fuel Fired Boilers." Coordinating

Copyright 2014 National Fire Protection Association (NFPA). Licensed, by agreement, for individual use and download on October 4, 2014 to LEADER and READER for designated user PATTARAPORN SRITRAKOOL. No other reproduction or transmission in any form permitted without written permission of NFPA. For inquires or to report unauthorized use, contact licensing@nfpa.org.

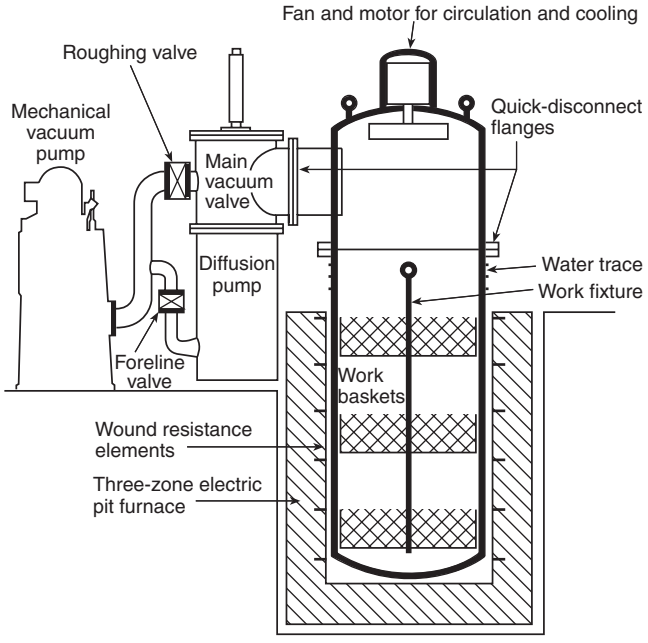

FIGURE A.1.1.6(c) Example of a Hot-Wall, Single-Pumped, Retort Vacuum Furnace.

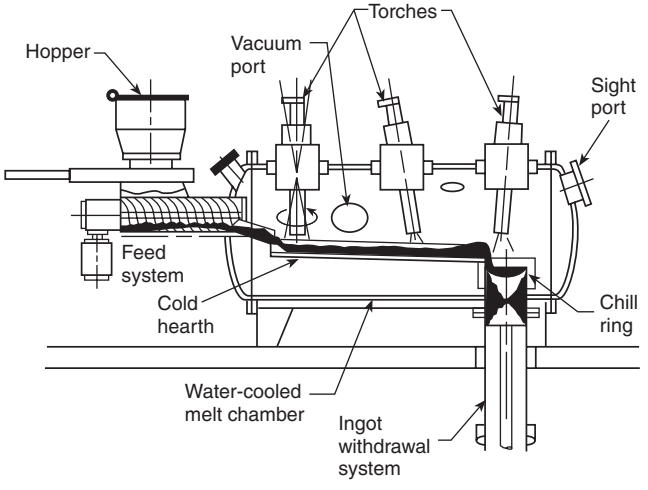

FIGURE A.1.1.6(d) Example of a Three-Torch Production Plasma Melter.

this guidance into the design of an oven or furnace requires special knowledge and experience so that the solid fuel system is integrated into the overall oven or furnace system while the intent of NFPA 86 with regard to other interlock and control requirements is maintained.

A.1.3.1 Because this standard is based on the current state of the art, application to existing installations is not mandatory. Nevertheless, users are encouraged to adopt those features of this standard that are considered applicable and reasonable for existing installations.

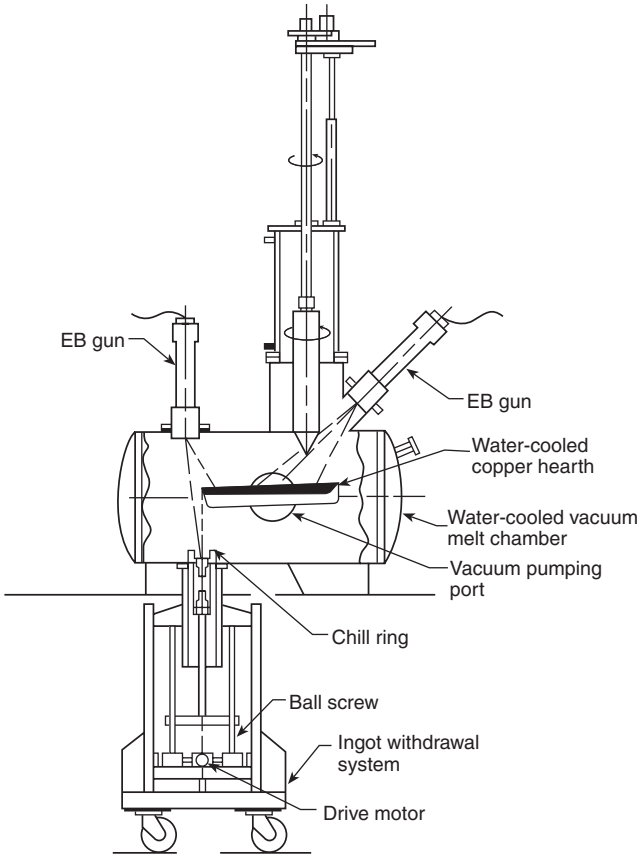

FIGURE A.1.1.6(e) Example of an Electron-Beam (EB) Melter.

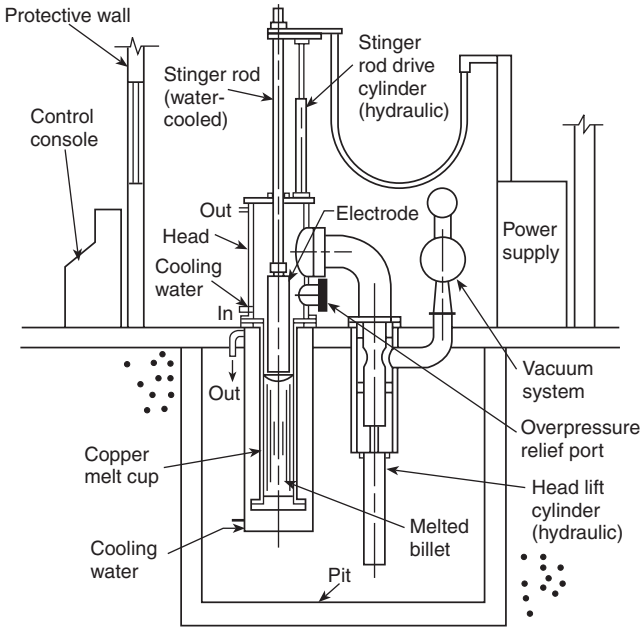

FIGURE A.1.1.6(f) Example of a Vacuum Arc Melter.

Copyright 2014 National Fire Protection Association (NFPA). Licensed, by agreement, for individual use and download on October 4, 2014 to LEADER and READER for designated user PATTARAPORN SRITRAKOOL. No other reproduction or transmission in any form permitted without written permission of NFPA. For inquires or to report unauthorized use, contact licensing@nfpa.org.

A.1.5 No standard can guarantee the elimination of furnace fires and explosions. Technology in this area is under constant development, which is reflected in fuel, special processing atmospheres, flammable vapors, and quench systems, with regard to the type of equipment and the characteristics of the various fluids. Therefore, the designer is cautioned that this standard is not a design handbook and thus does not eliminate the need for an engineer or competent engineering judgment. It is the intention of this standard that a designer capable of applying more complete and rigorous analysis to special or unusual problems have latitude in the development of furnace designs. In such cases, the designer should be responsible for demonstrating and documenting the safety and validity of the design.

A.3.2.1 Approved. The National Fire Protection Association does not approve, inspect, or certify any installations, procedures, equipment, or materials; nor does it approve or evaluate testing laboratories. In determining the acceptability of installations, procedures, equipment, or materials, the authority having jurisdiction may base acceptance on compliance with NFPA or other appropriate standards. In the absence of such standards, said authority may require evidence of proper installation, procedure, or use. The authority having jurisdiction may also refer to the listings or labeling practices of an organization that is concerned with product evaluations and is thus in a position to determine compliance with appropriate standards for the current production of listed items.

A.3.2.2 Authority Having Jurisdiction (AHJ). The phrase "authority having jurisdiction," or its acronym AHJ, is used in NFPA documents in a broad manner, since jurisdictions and approval agencies vary, as do their responsibilities. Where public safety is primary, the authority having jurisdiction may be a federal, state, local, or other regional department or individual such as a fire chief; fire marshal; chief of a fire prevention bureau, labor department, or health department; building official; electrical inspector; or others having statutory authority. For insurance purposes, an insurance inspection department, rating bureau, or other insurance company representative may be the authority having jurisdiction. In many circumstances, the property owner or his or her designated agent assumes the role of the authority having jurisdiction; at government installations, the commanding officer or departmental official may be the authority having jurisdiction.

A.3.2.4 Listed. The means for identifying listed equipment may vary for each organization concerned with product evaluation; some organizations do not recognize equipment as listed unless it is also labeled. The authority having jurisdiction should utilize the system employed by the listing organization to identify a listed product.

A.3.3.6 Burner Management System. The burner management system logic can include the following functions: safety interlocks, pre-purge, trial for ignition, and safe-start check.

A.3.3.13 Cryogenic Fluid. In the context of this standard, *cryogenic fluid* generally refers to gases made at low temperatures and stored at the user site in an insulated tank for use as an inert purge gas or as an atmosphere or atmosphere constituent (e.g., nitrogen, argon, carbon dioxide, hydrogen, oxygen). Cryogenic fluids must be stored and piped in vessels and piping that conform to the requirements for low-temperature fluids in the applicable NFPA, CGA, ANSI, and ASME standards.

A.3.3.14 Cut-Away Damper. Cut-away dampers normally are placed in the exhaust or fresh air intake ducts to ensure that the required minimum amount of exhaust or fresh air is handled by the ventilating fans.

A.3.3.16 Explosion-Resistant (Radiant Tube). The radiant tube or the radiant tube heat recovery system can experience bulging and distortion but should not fail catastrophically.

A.3.3.20 Flame Propagation Rate. This rate is a function of the temperature and the mixture conditions existing in the combustion space, burner, or piping under consideration.

A.3.3.21 Flame Rod. The resulting electrical current, which passes through the flame, is rectified, and this rectified current is amplified by the flame detector.

A.3.3.22 Flammable Limits. LFL is also known as lower explosive limit (LEL). See ASTM E 681, *Standard Test Method for Concentration Limits of Flammability of Chemicals (Vapors and Gases).*

A.3.3.27.3 Class A Furnace. Flammable volatiles or combustible materials can include, but are not limited to, any of the following:

(1) Paints, powders, inks, and adhesives from finishing processes, such as dipped, coated, sprayed, and impregnated materials
(2) Substrate material
(3) Wood, paper, and plastic pallets, spacers, or packaging materials
(4) Polymerization or other molecular rearrangements

In addition, potentially flammable materials, such as quench oil, waterborne finishes, cooling oil, or cooking oils, that present a hazard should be ventilated according to Class A standards.

A.3.3.27.4 Class B Furnace. It is important to note that the loads processed in Class B furnaces typically do not contain any flammable volatiles or combustible materials. However, when small amounts of flammable volatiles or combustible materials are present, it can be appropriate not to add safety ventilation, as would be required for a Class A furnace, when doing so would be detrimental to the process and would not increase the level of safety. *(See A.3.3.25.3.)*

A.3.3.27.5 Class C Furnace. This type of furnace uses any type of heating system and includes a special atmosphere supply system(s). Also included in the Class C classification are integral quench furnaces and molten salt bath furnaces.

A.3.3.27.6 Class D Furnace. During inert gas quenching, Class D furnaces operate at pressures from below atmospheric to over a gauge pressure of 100 psi (690 kPa).

A.3.3.30 Gas Quenching. The gas is recirculated over the work and through a heat exchanger by means of a fan or blower.

A.3.3.32 Hardwired. When the term hardwired is applied to the logic system itself, it refers to the method of using individual devices and interconnecting wiring to program and perform the logic functions without the use of software-based logic solvers.

A.3.3.33.1 Dielectric Heating System. This type of heater is useful for heating materials that commonly are thought to be nonconductive. Examples of uses include heating plastic preforms before molding, curing glue in plywood, drying rayon cakes, and other similar applications.

Copyright 2014 National Fire Protection Association (NFPA). Licensed, by agreement, for individual use and download on October 4, 2014 to LEADER and READER for designated user PATTARAPORN SRITRAKOOL. No other reproduction or transmission in any form permitted without written permission of NFPA. For inquires or to report unauthorized use, contact licensing@nfpa.org.

A.3.3.33.3 Direct-Fired Heating System. The following are different types of direct-fired heating systems:

(1) *Direct-Fired, External, Nonrecirculating Heater* — a direct-fired external heater arranged so that products of combustion are discharged into the oven chamber without any return or recirculation from the oven chamber *[see Figure A.3.3.33.3(a)]*

(2) *Direct-Fired, External, Recirculating-Through Heater* — a direct-fired external heater arranged so that oven atmosphere is recirculated to the oven heater and is in contact with the burner flame *[see Figure A.3.3.33.3(b)]*

(3) *Direct-Fired, Internal, Nonrecirculating Heater* — a combustion chamber of a recirculating oven heater that can be permitted to be built within an oven chamber not substantially separated from the oven atmosphere by gastight construction

(4) *Direct-Fired, External, Recirculating-Not-Through Heater* — a heating system constructed so that the oven atmosphere circulates through a blower with products of combustion admitted to the recirculating ductwork but without the oven atmosphere actually passing through the combustion chamber *[see Figure A.3.3.33.3(c)]*

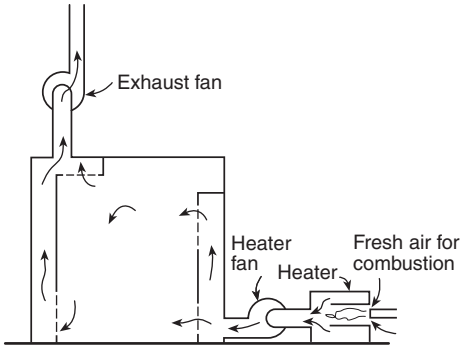

FIGURE A.3.3.33.3(a) Example of a Direct-Fired, External, Nonrecirculating Heater.

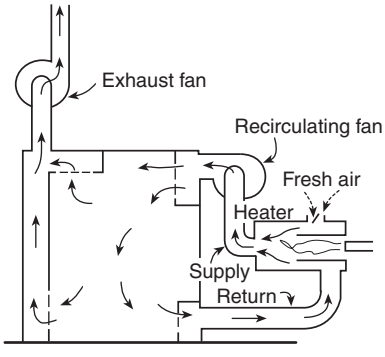

FIGURE A.3.3.33.3(b) Example of a Direct-Fired, External, Recirculating-Through Heater.

A.3.3.33.6 Indirect-Fired Internal Heating System. Radiators might be designed to withstand explosion pressures from ignition of air–fuel mixtures in the radiators. See Figure A.3.3.33.6 for an example of an indirect-fired internal heating system.

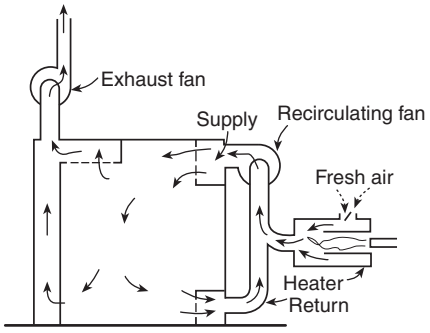

FIGURE A.3.3.33.3(c) Example of a Direct-Fired, External, Recirculating-Not-Through Heater.

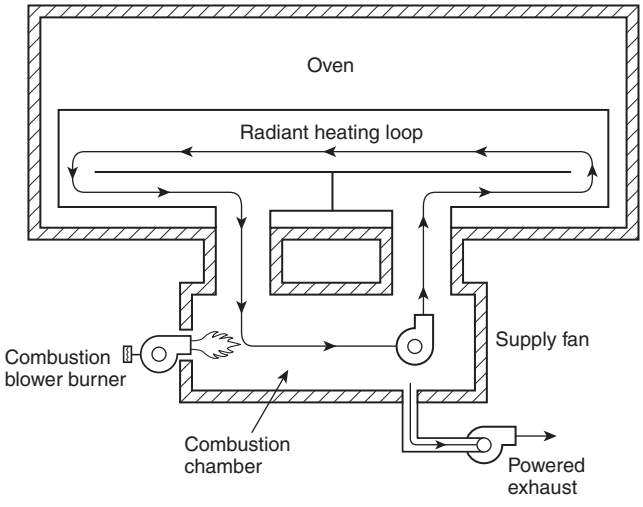

FIGURE A.3.3.33.6 Example of an Indirect-Fired Internal Heating System.

A.3.3.33.7 Induction Heating System. See *NFPA 70, National Electrical Code*, Article 665.

A.3.3.33.9 Resistance Heating System. Resistance heaters can be of the open type, with bare heating conductors, or the insulated sheath type, with conductors covered by a protecting sheath that can be filled with electrical insulating material.

A.3.3.35 Implosion. Implosion can be followed by an outward scattering of pieces of the wall if the wall material is not ductile, thus causing possible danger to nearby equipment and personnel.

A.3.3.37 Limiting Oxidant Concentration (LOC). Materials other than oxygen can act as oxidants.

A.3.3.40.2 Air Jet Mixer. In some cases, this type of mixer can be designed to entrain some of the air for combustion as well as the fuel gas.

A.3.3.48.1 Low-Oxygen Oven. These ovens normally operate at high solvent levels and can operate safely in this manner by limiting the oxygen concentration within the oven enclosure.

A.3.3.56.5 Roughing Pump. The roughing pump also can be used as the backing (fore) pump for the diffusion pump, or the roughing pump can be shut off and a smaller pump used as the backing (fore) pump where the gas load is relatively small.

Copyright 2014 National Fire Protection Association (NFPA). Licensed, by agreement, for individual use and download on October 4, 2014 to LEADER and READER for designated user PATTARAPORN SRITRAKOOL. No other reproduction or transmission in any form permitted without written permission of NFPA. For inquires or to report unauthorized use, contact licensing@nfpa.org.

A.3.3.62 Safe-Start Check. A flame-detected condition could exist due to the presence of actual or simulated flame or due to component failure within the combustion safeguard or flame detector(s).

A.3.3.63 Safety Device. Safety devices are redundant controls, supplementing controls utilized in the normal operation of a furnace system. Safety devices act automatically, either alone or in conjunction with operating controls, when conditions stray outside of design operating ranges and endanger equipment or personnel.

A.3.3.69.7 Proof-of-Closure Switch. A common method of effecting proof of closure is by valve seal overtravel.

A.3.3.78.2 Safety Shutoff Valve. The valve can be opened either manually or automatically, but only after the solenoid coil or other holding mechanism is energized.

A.3.3.79 Valve Proving System. EN 1643, *Valve Proving Systems for Automatic Shut-off Valves for Gas Burners and Gas Appliances*, requires leakage to be less than 1.76 ft^3/hr (50 L/hr). The definition of *proof of closure* in ANSI Z21.21/CSA 6.5, *Automatic Valves for Gas Appliances*, and FM 7400, *Approval Standard for Liquid and Gas Safety Shutoff Valves*, requires leakage less than 1 ft^3/hr (28.32 L/hr).

A.3.3.81.1 Safety Ventilation. The maximum allowed percent of the lower flammable limit (LFL) is 25 percent when the safety ventilation rate is based upon the calculation methods provided in this standard for Class A ovens. As permitted by this standard, the maximum allowed percent of the lower flammable limit (LFL) may range up to 50 percent when a continuous vapor concentration high-limit controller(s) is used.

A.4.1 Section 4.1 includes requirements for complete plans, sequence of operations, and specifications to be submitted to the authority having jurisdiction for approval. Application forms such as those in Figure A.4.1(a) and Figure A.4.1(b) can be used or might be requested to help the authority having jurisdiction in this approval process. (Variations of the forms depend on the type of furnace or oven being furnished, its application, and the authority having jurisdiction.) These figures are two historical examples of application forms that are based on older editions of the standard. Forms consistent with current requirements should be used.

A.4.1.1.2 Ladder-type schematic diagrams are recommended.

A.4.1.3.1 The proximity of electrical equipment and flammable gas or liquid in an electrical enclosure or panel is a known risk and would be considered a classified area. Article 500 of *NFPA 70, National Electrical Code*, should be consulted.

If conduit that connects devices that handle flammable material fails, it might carry the material to an electrical enclosure, creating a classified area in that enclosure. Sealing of such conduits should be considered.

A.4.1.3.4 Unless otherwise required by the local environment, ovens and furnaces and the surrounding area are not classified as a hazardous (classified) location. The primary source of ignition associated with an oven installation is the oven heating system or equipment or the materials heated. The presence of these ignition sources precludes the need for imposing requirements for wiring methods appropriate for a hazardous (classified) location. Refer to NFPA 497, *Recommended Practice for the Classification of Flammable Liquids, Gases, or Vapors and of Hazardous (Classified) Locations for Electrical Installations in Chemical Process Areas*, and NFPA 499, *Recommended Practice for the Classification of Combustible Dusts and of Hazardous (Classified) Locations for Electrical Installations in Chemical Process Areas*, regarding equipment with open flames or other ignition sources.

In addition, ovens and furnaces are considered unclassified internally because proved ventilation is provided to ensure safety.

A.5.1.1.1 Hazards to be considered include molten metal, molten salt, or other molten material spillage, quench tanks, hydraulic oil ignition, overheating of material in the furnace, and escape of fuel, processing atmospheres, or flue gases.

A.5.1.1.4 For additional information, refer to NFPA 31, *Standard for the Installation of Oil-Burning Equipment*, NFPA 54, *National Fuel Gas Code*, and NFPA 91, *Standard for Exhaust Systems for Air Conveying of Vapors, Gases, Mists, and Noncombustible Particulate Solids*.

A.5.1.3.4 The hazard is particularly severe where vapors from dipping operations could flow by means of gravity to ignition sources at or near floor level.

See NFPA 30, *Flammable and Combustible Liquids Code*; NFPA 33, *Standard for Spray Application Using Flammable or Combustible Materials*; and NFPA 34, *Standard for Dipping, Coating, and Printing Processes Using Flammable or Combustible Liquids*.

A.5.1.4.3 If the furnace is located in contact with a wood floor or other combustible floor and the operating temperature is above 160°F (71°C), one or both of the following steps should be adequate to prevent surface temperatures of floor members from exceeding 160°F (71°C):

(1) Combustible floor members should be removed and replaced with a monolithic concrete slab that extends a minimum of 3 ft (1 m) beyond the outer extremities of the furnace.
(2) Air channels, either naturally or mechanically ventilated, should be provided between the floor and the equipment (perpendicular to the axis of the equipment), or noncombustible insulation should be provided.

A.5.2.3 Furnace design should include factors of safety so as to avoid failures when operating at maximum design load.

A.5.2.4 Consider additional design loads, such as seismic, precipitation, and wind loads where appropriate.

A.5.2.6.1 Ladders, walkways, and access facilities, where provided, should be designed in accordance with 29 CFR 1910.24 through 29 CFR 1910.29 and with ANSI A14.3, *Safety Requirements for Fixed Ladders*.

A.5.2.10 Adequate coolant flow is vital to the safe operation of some ovens and furnaces. Where flow switches are provided to verify flow, they should be tested regularly. Other means, such as flow indicators, should also be considered for supplementing the function of flow switches *(see A.14.2.4.4)*.

Testing frequency should be developed from experience and should consider water quality factors. Poor water quality due to scaling or fouling potential and other factors may require more frequent testing. Testing intervals should not extend beyond 1 year.

Copyright 2014 National Fire Protection Association (NFPA). Licensed, by agreement, for individual use and download on October 4, 2014 to LEADER and READER for designated user PATTARAPORN SRITRAKOOL. No other reproduction or transmission in any form permitted without written permission of NFPA. For inquires or to report unauthorized use, contact licensing@nfpa.org.

MANUFACTURER'S JOB OR CONTRACT NO.	DATE

PART A — PLANS

NAME OF CUSTOMER (name of owner)				
ADDRESS (St. & No.)		CITY		STATE
NAME OF MANUFACTURER				
ADDRESS (St. & No.)		CITY		STATE
DRAWINGS SUBMITTED, NOS.				NO. OF SETS
INSTALLATION	TYPE ☐ BATCH ☐ CONTINUOUS			
	CONSISTS OF			
RATED HEAT INPUT	BTU/HR	☐ GAS BTU/FT^3	☐ FUEL OIL NO. GAL/HR	☐ ELECTRIC KW
SIZE (EXTERNAL IN FT)	LENGTH	WIDTH	HEIGHT	OPERATING TEMP. °F
LOCATION OF EQUIPMENT	BLDG. NO. OR NAME		NO. OF FLOORS OR STORIES	
FUEL SHUTOFF	ACCESSIBLE IN EVENT OF FIRE? ☐ YES ☐ NO	SEPARATE EXCESS TEMPERATURE LIMIT SWITCH SHUTS OFF HEAT? YES ☐ NO ☐	SET FOR °F	
FIRE PROTECTION OF OIL QUENCH TANK	☐ NONE ☐ AUTOMATIC SPRINKLERS ☐ OPEN SPRINKLERS ☐ AUTOMATIC WATER SPRAY ☐ AUTOMATIC FIXED FOAM			
	☐ IF OTHER, DESCRIBE			
TYPE OF WORK	HEAT TREATING METALS ☐ WITH SPECIAL FLAMMABLE ATMOSPHERE ☐ WITH SPECIAL INERT ATMOSPHERE			
	IF OTHER, DESCRIBE			
HEATING ARRANGEMENT	☐ INTERNAL DIRECT-FIRED NONRECIRCULATING ☐ INTERNAL DIRECT-FIRED RECIRCULATING ☐ EXTERNAL DIRECT-FIRED RECIRCULATING ☐ EXTERNAL INDIRECT-FIRED			
	☐ IF OTHER, DESCRIBE	MUFFLE? ☐ YES ☐ NO	RADIANT TUBES? ☐ YES ☐ NO	
	TYPE OF ELECTRIC HEATING ELEMENTS AND LOCATION			
	NO. OF MAIN BURNERS	NO. OF PILOT BURNERS		
METHOD OF LIGHT-OFF	☐ PORTABLE TORCH ☐ FIXED ☐ PILOT ☐ OIL ☐ GAS ☐ SPARK IGNITER			
METHOD OF FIRING	☐ HI–LOW ☐ MODULATING ☐ ON–OFF ☐ CONTINUOUS			
MIXER TYPE	☐ GAS	NO. OF MAIN BURNER INSPIRATORS	☐ ZERO-GOVERNOR TYPE ☐ ATMOSPHERIC INSPIRATOR ☐ HIGH PRESSURE 1.0 PSIG OR OVER ☐ LOW PRESSURE ☐ OTHER	
		NO. OF PILOT INSPIRATORS	☐ ZERO-GOVERNOR TYPE ☐ ATMOSPHERIC INSPIRATOR ☐ HIGH PRESSURE 1.0 PSIG OR OVER ☐ LOW PRESSURE ☐ OTHER	
	☐ OIL	☐ AIR (16–32 OZ) ATOMIZING	☐ ROSS OR DRY SYSTEM AIR ATOMIZING ☐ OTHER	
	IF OTHER, DESCRIBE (MFR. & TYPE)			

© 2014 National Fire Protection Association NFPA 86 (p. 1 of 2)

FIGURE A.4.1(a) Sample 1: Furnace or Oven Manufacturer's Application for Acceptance.

Copyright 2014 National Fire Protection Association (NFPA). Licensed, by agreement, for individual use and download on October 4, 2014 to LEADER and READER for designated user PATTARAPORN SRITRAKOOL. No other reproduction or transmission in any form permitted without written permission of NFPA. For inquires or to report unauthorized use, contact licensing@nfpa.org.

PROTECTION AGAINST FUEL EXPLOSION

LIGHTING OFF

OPENINGS INTO ROOM ☐ TOP ☐ BOTTOM

NO FUEL & IGNITION UNTIL: ☐ TIMED PREVENTILATION BY EXH. & RECIRCULATING FANS | TIMER SETTING MIN. | ☐ DOORS WIDE OPEN | ☐ BURNER (F.M.) COCKS CLOSED | ☐ MEANS PROVIDED FOR CHECK OF MAIN SAFETY SHUTOFF VALVE TIGHTNESS

PILOT-FLAME ESTABLISHING PERIOD AUTOMATICALLY LIMITED? ☐ YES ☐ NO SEC. | TRIAL-FOR-IGNITION PERIOD AUTOMATICALLY LIMITED? ☐ YES ☐ NO SEC. | OIL TEMP. INTERLOCK? ☐ YES ☐ NO SET FOR °F | PROVED LOW-FIRE INTERLOCK? ☐ YES ☐ NO

MFR. & TYPE NO. OF F.M. COCKS AND TIMER | COMB. AIR BLOWER CANNOT BE STARTED UNTIL END OF PREVENT. (IF TIMER USED) | COMB. SAFEGUARD PROVES PILOT BEFORE MAIN SAFETY SHUTOFF VALVE OPENS

FIRING

HEAT CUTOFF AUTOMATICALLY, REQUIRING MANUAL OPERATION TO RESTORE, ON FAILURE OF ☐ COMBUSTION AIR ☐ RECIRCULATING FAN ☐ EXHAUST FAN ☐ FUEL PRESSURE ☐ FLAME (combustion safeguard)

☐ ROD OR SCANNER LOCATION ENSURES PILOT IGNITES MAIN FLAME | MANDATORY PURGE AFTER FLAME FAILURE? ☐ YES ☐ NO

MFR. & TYPE NO.

MAIN SAFETY SHUTOFF VALVE IPS. IN. | PILOT SAFETY SHUTOFF VALVE IPS. IN.

COMBUSTION SAFEGUARD | PRESSURE SWITCHES | AUTOMATIC FIRE CHECKS

PROTECTION AGAINST SPECIAL ATMOSPHERE EXPLOSION

ATMOSPHERE FIRST TURNED ON INTO: ☐ HEATED WORK SECTION ☐ COOLING SECTION

IF COOLING SECTION, EXPLAIN HOW HAZARD AVOIDED

TEMPERATURE OF THIS SECTION WHEN ATMOSPHERE TURNED ON °F | SHUTOFF °F | ☐ ATMOSPHERE INTERLOCKED WITH FURNACE TEMPERATURE CONTROLLER

PRECAUTIONS WHEN TURNING ON AND SHUTTING OFF ATMOSPHERE ☐ INERT GAS PURGE ☐ BURN-OUT ☐ NO IGNITION SOURCE WHILE FURNACE ATMOSPHERE EXPLOSIVE

IF LATTER CASE, CHECK FOR NONEXPLOSIVE ATMOSPHERE IS BY ☐ GAS ANALYZER ☐ BURNING TEST SAMPLE ☐ TIME–VOLUME MEASURE ☐ NONE

SPECIAL ATMOSPHERE GENERATOR

MANUFACTURER AND TYPE | ☐ ATMOSPHERE GENERATOR OUTPUT VENTED TO OUTDOORS UNTIL GENERATOR BURNER STABLE

ALARM AND AUTOMATIC LOCKOUT OF FUEL & COMBUSTION AIR IF FAILURE OF: ☐ FUEL ☐ COMBUSTION AIR ☐ POWER ☐ FLAME ☐ ATMOSPHERE TEMPERATURE AT GENERATOR

MFR. & TYPE NO.

SAFETY SHUTOFF VALVES | PRESSURE SWITCHES

TEMPERATURE SWITCHES | COMBUSTION SAFEGUARDS

PART A ACCEPTED ☐ AS SUBMITTED ☐ SUBJECT TO ANY CHANGES INDICATED | DATE

BY

PART B — MANUFACTURER'S INSPECTION & TEST (Completed Installation)

BURNERS ☐ LIGHTED ☐ MIXERS ADJUSTED ☐ TEMP. CONTROL SET ☐ ADJ. FOR STABLE LOW FLAME

SAFETY CONTROLS ☐ ADJUSTED ☐ TESTED FOR PROPER RESPONSE

INSTRUCTIONS ☐ CUSTOMER'S OPERATOR INSTRUCTED ☐ PRINTED OPERATING INSTRUCTIONS LEFT ☐ APPLICATION FOR ACCEPTANCE POSTED ON CONTROL PANEL

SIGNATURES MFRS. FIELD REP. | TEST WITNESSED BY DATE FOR CUSTOMER

PART B ACCEPTED ☐ AS SUBMITTED ☐ SUBJECT TO ANY CHANGES INDICATED | DATE

BY

PART C — FIELD EXAMINATION OF COMPLETED INSTALLATION

☐ PART A CHECKED ☐ PART B CHECKED ☐ SAFETY CONTROLS TESTED ☐ ROD OR SCANNER LOCATION ENSURES PILOT IGNITES MAIN FLAME

INSTALLATION ACCEPTABLE | DATE

BY

© 2014 National Fire Protection Association NFPA 86 (p. 2 of 2)

FIGURE A.4.1(a) ***Continued***

Copyright 2014 National Fire Protection Association (NFPA). Licensed, by agreement, for individual use and download on October 4, 2014 to LEADER and READER for designated user PATTARAPORN SRITRAKOOL. No other reproduction or transmission in any form permitted without written permission of NFPA. For inquires or to report unauthorized use, contact licensing@nfpa.org.

MANUFACTURER'S JOB OR CONTRACT NO. | DATE

PART A — PLANS

NAME & ADDRESS OF CUSTOMER (OWNER) | NAME & ADDRESS OF MANUFACTURER

DRAWINGS SUBMITTED, NOS. | NO. OF SETS

INSTALLATION

ERECTION & ADJUSTMENTS (SEE PART B) BY: ☐ MANUFACTURER ☐ CUSTOMER | IF OTHER, DESCRIBE

SAFETY VENTILATION AIRFLOW TESTS (SEE PART B) TO BE MADE AFTER ERECTION BY: ☐ MANUFACTURER ☐ CUSTOMER | IF OTHER, DESCRIBE

TYPE ☐ BATCH ☐ CONTINUOUS | TYPE NO. OR OTHER INFORMATION

CONSTRUCTION

☐ SHEET STEEL ON STEEL FRAME NONCOMBUSTIBLE INSULATION | IF OTHER, DESCRIBE

RATED HEAT INPUT

☐ GAS BTU/HR | ☐ FUEL OIL NO. GAL/HR | ☐ ELECTRIC KW | ☐ STEAM PRESS, psig

SIZE

LENGTH (External) FT | WIDTH (External) FT | HEIGHT (External) FT | VOLUME (Internal) FT^3 | OPERATING TEMP. °F

LOCATION OF EQUIPMENT

BLDG. NO. OR NAME | BUILDING FLOOR CONSTRUCTION AND NO. OF FLOOR OR STORY

AIR SPACE BETWEEN OVEN & WOOD FLOOR IN. | IF OTHER, DESCRIBE

AIR SPACE BETWEEN STACKS, DUCTS, & WOOD BLDG. CONST. IN. | IF OTHER, DESCRIBE

EXHAUST STACKS | DIAM. OR SIZE IN. | METAL GAUGE (USS) | ☐ INSULATED | NO. OF CLEAN-OUT (ACCESS) DOORS

EXPLOSION VENTING AREA

OPEN ENDS FT^2 | LOOSE ROOF PANELS FT^2 | ACCESS DOORS WITH EXPLOSION LATCHES FT^2

MANUFACTURER AND TYPE LATCH | TOTAL AREA FT^2 | VENT RATIO $\frac{\text{VENT AREA}}{\text{INTERNAL VOLUME}}$ =

FUEL SHUTOFF

ACCESSIBLE IN EVENT OF FIRE? ☐ YES ☐ NO

FIRE PROTECTION IN OVEN

☐ NONE ☐ AUTOMATIC SPRINKLERS ☐ OPEN SPRINKLERS ☐ CO_2 ☐ STEAM | DRAWINGS SUBMITTED? ☐ YES ☐ NO

☐ OTHER (DESCRIBE) | ☐ SEPARATE EXCESS TEMPERATURE LIMIT SWITCH WITH MANUAL RESET SET FOR °F

FIRE PROTECTION FOR DIP TANK & DRAINBOARD

DRAWINGS SUBMITTED? ☐ YES ☐ NO | FIXED AUTO. CO_2? ☐ YES ☐ NO | ☐ OTHER (DESCRIBE)

OVERFLOW VALVES? ☐ YES ☐ NO | DUMP VALVES? ☐ YES ☐ NO | SALVAGE TANK? ☐ YES ☐ NO | IS HEAT SHUT OFF AUTOMATICALLY ON FAILURE OF CONVEYOR? ☐ YES ☐ NO

TYPE OF WORK

IMPREGNATED-COATED ABSORBENT MATERIAL ☐ PAPER ☐ CLOTH | ☐ LITHOGRAPH COATING ☐ VARNISH ELECT. COILS ☐ GRAVURE PRESS ☐ FOOD BAKING ☐ CORES OR MOLDS

METAL ☐ DIPPED ☐ FLOW-COATED ☐ SPRAYED | ☐ OTHER (DESCRIBE)

SOLVENTS ENTERING OVEN

NAME OF SOLVENT USED | LENGTH OF BAKE MIN. | MAX. SOLVENT FOR WHICH OVEN DESIGNED CONTINUOUS GAL/HR BATCH GAL/BATCH

DESIGNED SAFETY VENTILATION

ARRANGEMENT ☐ SEPARATE CENTRIFUGAL EXHAUSTER ☐ RECIRCULATING FAN WITH SPILL ☐ NATURAL DRAFT STACK ☐ OPENINGS INTO ROOM | FILTERS ON FRESH AIR INTAKE? ☐ YES ☐ NO

FRESH AIR ADMITTED INTO OVEN CFM REFERRED TO 70°F | OPENING WITH DAMPER CLOSED FRESH AIR INLET _____% EXHAUST OUTLET _____% | DOES CONVEYOR STOP AUTOMATICALLY ON FAILURE OF SAFETY EXHAUST FANS? ☐ YES ☐ NO

FAN MFR., SIZE, TYPE | WHEEL DESIGN (BLADE TIP) ☐ RADIAL TIP ☐ BACKWARD INCLINED ☐ FORWARD CURVED | DIAM. IN. | TIP SPEED FT/MIN

© 2014 National Fire Protection Association NFPA 86 (p. 1 of 2)

FIGURE A.4.1(b) Sample 2: Furnace or Oven Manufacturer's Application for Acceptance.

Copyright 2014 National Fire Protection Association (NFPA). Licensed, by agreement, for individual use and download on October 4, 2014 to LEADER and READER for designated user PATTARAPORN SRITRAKOOL. No other reproduction or transmission in any form permitted without written permission of NFPA. For inquires or to report unauthorized use, contact licensing@nfpa.org.

HEATING ARRANGEMENT

☐ INTERNAL DIRECT-FIRED NONRECIRCULATING ☐ INTERNAL DIRECT-FIRED RECIRCULATING ☐ EXTERNAL DIRECT-FIRED RECIRCULATING ☐ EXTERNAL INDIRECT-FIRED

☐ OTHER (DESCRIBE)

TYPE OF ELECTRIC HEATING ELEMENTS AND LOCATION

NO. OF MAIN BURNERS | NO. OF PILOT BURNERS | CAN DRIPPINGS OFF WORK FALL ON HEATING ELEMENTS? ☐ YES ☐ NO

METHOD OF LIGHT-OFF

☐ PORTABLE TORCH ☐ FIXED ☐ PILOT ☐ OIL ☐ GAS ☐ SPARK IGNITER

METHOD OF FIRING

☐ HI–LOW ☐ ON–OFF ☐ MODULATING ☐ CONTINUOUS ☐ AUTOMATIC-LIGHTED ☐ MANUAL-LIGHTED ☐ SEMI-AUTOMATIC-LIGHTED

TYPE OF PILOT
☐ CONTINUOUS ☐ INTERRUPTED ☐ INTERMITTENT ☐ OTHER (DESCRIBE)

MIXER TYPE

☐ GAS — NO. MAIN BURNER INSPIRATORS — ☐ ZERO-GOVERNOR TYPE ☐ ATMOSPHERIC INSPIRATOR ☐ HIGH PRESSURE ☐ LOW PRESSURE

NO. PILOT INSPIRATORS — ☐ ZERO-GOVERNOR TYPE ☐ ATMOSPHERIC INSPIRATOR ☐ HIGH PRESSURE ☐ LOW PRESSURE

☐ OIL — ☐ AIR (16–32 OZ) ATOMIZING

☐ OTHER — OTHER TYPE MIXERS OR OIL BURNERS INCLUDING PILOTS (MFR. & TYPE)

PROTECTION AGAINST FUEL EXPLOSION

LIGHTING OFF

NO FUEL AND IGNITION UNTIL: ☐ TIMED PREVENTILATION BY EXHAUST AND RECIRC. FANS | TIMER SETTING MIN. | ☐ DOORS WIDE OPEN | ☐ BURNER (F.M.) COCKS CLOSED | ☐ MEANS PROVIDED FOR CHECK OF MAIN SAFETY SHUTOFF VALVE TIGHTNESS

PILOT-FLAME-ESTABLISHING PERIOD AUTOMATICALLY LIMITED? ☐ YES ☐ NO SEC. | TRIAL-FOR-IGNITION PERIOD AUTOMATICALLY LIMITED? ☐ YES ☐ NO SEC. | OIL TEMP. INTERLOCK? ☐ YES ☐ NO SET FOR °F | PROVED LOW-FIRE INTERLOCK? ☐ YES ☐ NO

MFR. AND TYPE NO. OF F.M. COCKS & TIMER | COMBUSTION AIR BLOWER CANNOT ☐ BE STARTED UNTIL END OF PREVENT. (IF TIMER USED) | COMBUSTION SAFEGUARD PROVES ☐ PILOT BEFORE MAIN SAFETY SHUTOFF VALVE OPENS

FIRING

HEAT CUTOFF AUTOMATICALLY, REQUIRING MANUAL OPERATION TO RESTORE, ON FAILURE OF
☐ COMBUSTION AIR ☐ RECIRCULATING FAN ☐ SAFETY EXHAUST FAN ☐ HIGH AND LOW GAS PRESSURE ☐ LOW OIL PRESSURE ☐ FLAME (Combustion Safeguard)

ROD OR SCANNER LOCATION ENSURES ☐ PILOT IGNITES MAIN FLAME | MANDATORY PURGE AFTER FLAME FAILURE? ☐ YES ☐ NO

MANUFACTURER & TYPE NO.

MAIN SAFETY SHUTOFF VALVE IPS. IN. | PILOT SAFETY SHUTOFF VALVE IPS. IN.

COMBUSTION SAFEGUARD | PRESSURE SWITCHES | AIRFLOW SWITCHES

PART A ACCEPTED ☐ AS SUBMITTED ☐ SUBJECT TO ANY CHANGES INDICATED | DATE

BY

PART B — MANUFACTURER'S INSPECTION & TEST

SAFETY VENTILATION

CFM REF. TO 70° F | MEASURED BY ☐ PITOT ☐ (SPECIFY) OTHER | MEASURED WITH FRESH AIR INLET & EXHAUST OUTLET DAMPERS IN MAXIMUM CLOSED POSITION ☐ YES ☐ NO

BURNERS

☐ LIGHTED ☐ MIXERS ADJUSTED ☐ TEMP. CONTROL SET ☐ ADJUSTED FOR STABLE LOW FLAME

SAFETY CONTROLS

☐ ADJUSTED ☐ TESTED FOR PROPER RESPONSE

INSTRUCTIONS

☐ CUSTOMER'S OPERATOR INSTRUCTED ☐ PRINTED OPERATING INSTRUCTIONS LEFT ☐ APPLICATION FOR ACCEPTANCE POSTED ON CONTROL PANEL

SIGNATURES

MFR'S. FIELD REP. | TEST WITNESSED BY FOR CUSTOMER | DATE

PART B ACCEPTED ☐ AS SUBMITTED ☐ SUBJECT TO ANY CHANGES INDICATED | DATE

BY

PART C — FIELD EXAMINATION OF COMPLETED INSTALLATION

☐ PART A CHECKED ☐ PART B CHECKED ☐ SAFETY CONTROLS TESTED ☐ ROD OR SCANNER LOCATION ENSURES PILOT IGNITES MAIN FLAME

ENGINEER'S SIGNATURE | DATE

© 2014 National Fire Protection Association NFPA 86 (p. 2 of 2)

FIGURE A.4.1(b) *Continued*

Copyright 2014 National Fire Protection Association (NFPA). Licensed, by agreement, for individual use and download on October 4, 2014 to LEADER and READER for designated user PATTARAPORN SRITRAKOOL. No other reproduction or transmission in any form permitted without written permission of NFPA. For inquires or to report unauthorized use, contact licensing@nfpa.org.

A.5.2.13 Fuel-fired or electric heaters should not be located directly under the product being heated where combustible materials could drop and accumulate. Neither should they be located directly over readily ignitible materials such as cotton unless for a controlled exposure period, as in continuous processes where additional automatic provisions, arrangements of guard baffles, or both preclude the possibility of ignition.

A.5.2.16 See ASME *Boiler and Pressure Vessel Code*, Section VIII. Also see API 510, *Pressure Vessel Inspection Code: In-Service Inspection, Rating, Repair, and Alteration*, and API 570, *Piping Inspection Code: Inspection, Repair, Alteration, and Rerating of In-Service Piping Systems*. Where subject to corrosion, metal parts should be adequately protected.

A.5.3 Explosion hazards can be mitigated by the following methods:

(1) Containment
(2) Explosion relief
(3) Location
(4) Explosion suppression
(5) Damage-limiting construction

For additional information regarding explosion protection of equipment and buildings, see NFPA 68, *Standard on Explosion Protection by Deflagration Venting*, and NFPA 69, *Standard on Explosion Prevention Systems*.

A.5.3.1 For additional information regarding relief of equipment and buildings housing the equipment, see NFPA 68, *Standard on Explosion Protection by Deflagration Venting*.

A.5.3.1(6) Because the combustion air has only one path from the combustion blower through the supervised powered exhaust, there is no buildup of products of combustion in the heat exchanger. The minimum exhaust rate for the heat exchanger should be determined using 11.6.6.1, which states 183 scfm (5.18 standard m^3/min) per 1,000,000 Btu/hr (293.1 kW) burner rating. Refer to Figure A.5.3.1(6).

A.5.3.2 The intent of providing explosion relief in furnaces is to limit damage to the furnace and to reduce the risk of personnel injury due to explosions.

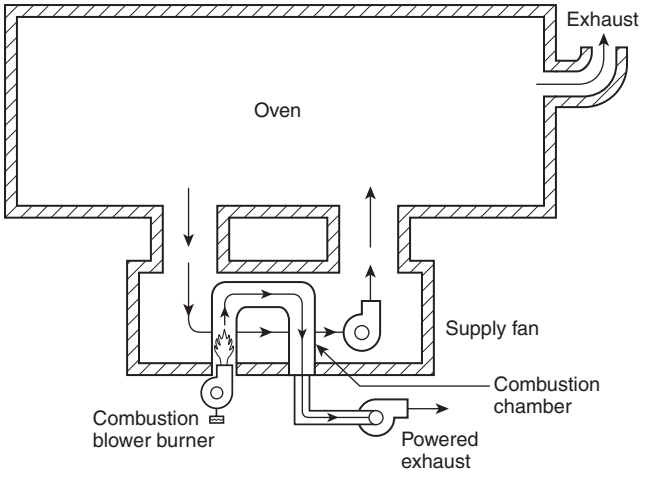

FIGURE A.5.3.1(6) Example of a Non-Recirculating, Indirect-Fired Oven.

The historic application of the 1 ft^2 (0.093 m^2) of relief area for each 15 ft^3 (0.424 m^3) of volume, which is based on industry experience and traditional construction methods, has provided an acceptable level of damage control and personnel protection. Furthermore, controls on fuel concentration (e.g., safety shutoff valves, safety ventilation interlocks) ensure that an upset condition results in only a localized concentration of flammable vapors within the oven volume, thus limiting the energy of the deflagration.

However, the oven designer, manufacturer, and end user should review their specific application and consider the probability of abnormal or "upset" conditions that could lead to concentrations in excess of 25 percent of the LFL distributed throughout the oven volume. A worst-case event involving an explosive mixture distributed throughout the oven volume is likely to require construction and venting design in accordance with NFPA 68, *Standard on Explosion Protection by Deflagration Venting*, to avoid catastrophic failure of the oven and hazard to personnel and equipment in the vicinity.

Users of this standard are also encouraged to seek out innovative solutions for deflagration venting as a means of overcoming impracticalities associated with traditional venting solutions. Such innovative solutions include weak seam or weak joint construction, damage-limiting construction, self-relieving enclosures, tethered panels, and lifting enclosures. As with any deflagration venting solution, personnel protection is to be considered foremost in the event of a vent-relieving incident.

A.5.3.5 The location for explosion relief is a critical concern and should be close to the ignition source. The heater box is part of the oven system and needs to have explosion relief provided. Personnel considerations and proximity to other obstructions can affect the location selected for explosion-relief vents.

A.5.3.7 Industry experience indicates that a typical oven enclosure built to withstand a minimum of a gauge pressure of 0.5 psi (3.45 kPa) surge overpressure with explosion-relief panels having a maximum weight per area of 5 lb/ft^2 (24.4 kg/m^2) meets the requirements of 5.3.7.

A.5.3.8 The intent of providing explosion relief in furnaces is to limit damage to the furnace and to reduce the risk of personnel injury due to explosions. To achieve those goals, relief panels and doors should be sized so that their inertia does not preclude their ability to relieve internal explosion pressures.

A.5.4 For additional information, refer to NFPA 31, *Standard for the Installation of Oil-Burning Equipment*; NFPA 54, *National Fuel Gas Code*; and NFPA 91, *Standard for Exhaust Systems for Air Conveying of Vapors, Gases, Mists, and Noncombustible Particulate Solids*.

A.5.4.1 Most ovens and furnaces rely on the air in a building or room for safety ventilation and combustion. If the oven or furnace fans must compete with other building fans (such as building exhausts), safety and performance of the oven or furnace could be compromised.

When determining or reviewing the air requirements of a building or room for safety ventilation and combustion, provisions should be made for air being removed from the room for other purposes, such as for removal of heat, flue products, emergency generators, and other combustion equipment. Safety ventilation and combustion air must be in excess of air that is to be removed from the room for other purposes. Seasonal factors could also be relevant in cold climates, where building openings are closed during cold weather.

Copyright 2014 National Fire Protection Association (NFPA). Licensed, by agreement, for individual use and download on October 4, 2014 to LEADER and READER for designated user PATTARAPORN SRITRAKOOL. No other reproduction or transmission in any form permitted without written permission of NFPA. For inquires or to report unauthorized use, contact licensing@nfpa.org.

In the case of ovens and furnaces, especially those using natural draft (such as bakery ovens), combustion air consistent with requirements identified in Section 9.3 of NFPA 54, *National Fuel Gas Code*, should be provided.

A.5.4.3.3 Ducts that pass through fire walls should be avoided.

A.5.4.3.7 All interior laps in the duct joints should be made in the direction of the flow.

A.5.4.3.13 In many cases, the point of discharge is outside the building, and care should be taken that the discharge is not near an intake or building opening. However, in some cases, the building volume itself is a point of safe discharge, in which case the discharge should not be near areas in which volatiles can collect (unvented ceilings) or intakes (combustion/purge air intakes). Heavier-than-air effluents should not be discharged to the inside of a building.

A.6.2 The recommendations of equipment manufacturers should be followed when using gaseous fuels that are not specifically listed in the product literature. For installations using digester gas or landfill gas, CSA B149.6, *Code for Digester Gas and Landfill Gas Installations*, formerly CSA B105, is a recommended resource because it contains safety practices that should be addressed due to the inherent hazards, which are not specifically addressed in NFPA 86, with these types of gases, such as but not limited to oxygen, moisture, or hydrogen sulfide in the gas; use of such gases for a pilot; purging of the gas train; types of materials; or special pressure relief of a digester.

The term *ignition temperature* means the lowest temperature at which a gas–air mixture will ignite and continue to burn. This condition is also referred to as the *auto-ignition temperature*. Where burners supplied with a gas–air mixture in the flammable range are heated above the auto-ignition temperature, flashbacks could occur. In general, such temperatures range from 870°F to 1300°F (465°C to 704°C). A much higher temperature is needed to ignite gas dependably. The temperature necessary is slightly higher for natural gas than for manufactured gases; for safety with manufactured gases, a temperature of about 1200°F (649°C) is needed, and for natural gas, a temperature of about 1400°F (760°C) is needed. Additional safety considerations should be given to dirt-laden gases, sulfur-laden gases, high-hydrogen gases, and low-Btu waste gases.

The term *rate of flame propagation* means the speed at which a flame progresses through a combustible gas–air mixture under the pressure, temperature, and mixture conditions existing in the combustion space, burner, or piping under consideration. *(See Table A.6.2 and Figure A.6.2.)*

A.6.2.2 For additional information, refer to NFPA 54, *National Fuel Gas Code*.

A.6.2.2.4 See A.5.4.1 for information on combustion air supply considerations.

A.6.2.3.1 The valve used for remote shutoff service should be identified. A number of considerations, including the ability to safely shut down special atmosphere heat treat furnaces, might play a role. If the main incoming service valve is used for this purpose, it must be understood that the valve might be owned by the local utility, which could affect access and service of the valve. Remotely located valves used for shutting down fuel distribution systems that serve a number of users or pieces of equipment should be regularly exercised (by opening and closing several times) to verify their ability to operate when needed. Lubricated plug valves should be maintained annually, including the installation of sealant and leak testing.

A.6.2.4.2 NFPA 54, *National Fuel Gas Code*, provides sizing methods for gas piping systems.

A.6.2.5.3 When the fuel train is opened for service, the risk of dirt entry exists. It is not required that existing piping be opened for the sole purpose of the addition of a filter or strainer. It is good practice to have the sediment trap located upstream of the filter. The intent of the sediment trap is to remove larger particulates, while the intent of the filter is to remove smaller particulates. The reverse arrangement will result in additional maintenance and could result in removal of the filter element from service. The mesh size should be sized to protect downstream controls as prescribed by the components' manufacturer(s).

A.6.2.6.3 Paragraph 6.2.6.3 covers venting of flammable and oxidizing gases only. Gases that are asphyxiants, toxic, or corrosive are outside of the scope of this standard. In this regard, other standards should be consulted for appropriate venting. Flammable gases and oxidizers should be vented to a safe location to prevent fire or explosion hazards. When gases are vented, the vent pipe should be located in accordance with the following:

Table A.6.2 Properties of Typical Flammable Gases

Flammable Gas	Molecular Weight	Btu/ft^3	Auto-Ignition (°F)	LFL (% by volume)	UFL (% by volume)	Vapor Density (Air = 1)	Air Required to Burn 1 ft^3 of Gas (ft^3)
Butane	58.0	3200	550	1.9	8.5	2.0	31.0
CO	28.0	310	1128	12.5	74.0	0.97	2.5
Hydrogen	2.0	311	932	4.0	74.2	0.07	2.5
Natural gas (high-Btu type)	18.6	1115	—	4.6	14.5	0.64	10.6
Natural gas (high-methane type)	16.2	960	—	4.0	15.0	0.56	9.0
Natural gas (high-inert type)	20.3	1000	—	3.9	14.0	0.70	9.4
Propane	44.0	2500	842	2.1	9.5	1.57	24.0

For SI units, 1 kJ = 0.948 Btu, 1 m^3 = 35.3 ft^3, °C = 5⁄9 (°F − 32).

Copyright 2014 National Fire Protection Association (NFPA). Licensed, by agreement, for individual use and download on October 4, 2014 to LEADER and READER for designated user PATTARAPORN SRITRAKOOL. No other reproduction or transmission in any form permitted without written permission of NFPA. For inquires or to report unauthorized use, contact licensing@nfpa.org.

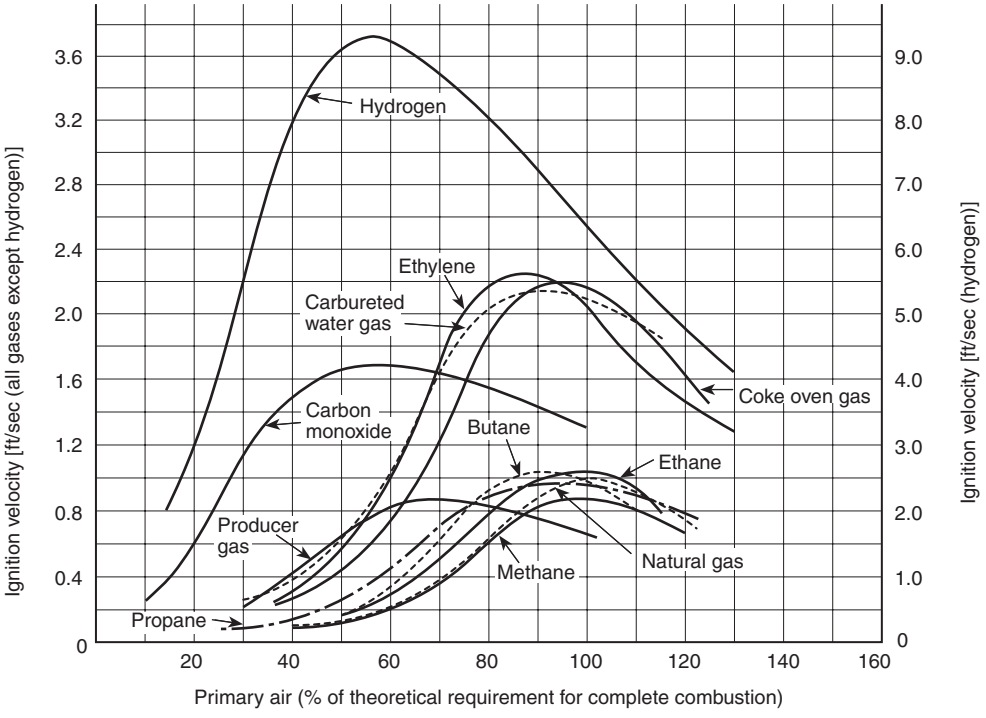

FIGURE A.6.2 Ignition Velocity Curves for Typical Flammable Gases.

(1) Gas should not impinge on equipment, support, building, windows, or materials because the gas could ignite and create a fire hazard.
(2) Gas should not impinge on personnel at work in the area or in the vicinity of the exit of the vent pipe because the gas could ignite and create a fire hazard.
(3) Gas should not be vented in the vicinity of air intakes, compressor inlets, or other devices that utilize ambient air.

The vent exit should be designed in accordance with the following:

(1) The pipe exit should not be subject to physical damage or foreign matter that could block the exit.
(2) The vent pipe should be sized to minimize the pressure drop associated with length, fitting, and elbows at the maximum vent flow rate.
(3) The vent piping should not have any shutoff valves in the line.

If the gas is to be vented inside the building, the following additional guidance is offered:

(1) If the gas is flammable and lighter than air, the flammable gases should be vented to a location where the gas is diluted below its LFL before coming in contact with sources of ignition and the gas cannot re-enter the work area without extreme dilution.
(2) If the gas is oxygen or air enriched with oxygen, the vent gas should be vented to a location where the gas will blend with atmospheric air to a point between 19 percent and 23 percent oxygen before coming in contact with combustibles or personnel.
(3) See also Chapter 4 of NFPA 56, *Standard for Fire and Explosion Prevention During Cleaning and Purging of Flammable Gas Piping Systems*, which provides information about the development and implementation of written procedures for the discharge of flammable gases.

A.6.2.6.4 See NFPA 54, *National Fuel Gas Code*, for exception to vent requirements.

Vent limiters are used to limit the escape of gas into the ambient atmosphere if a vented device (e.g., regulator, zero governor, pressure switch) requiring access to the atmosphere for operation has an internal component failure. When a vent limiter is used, there might not be a need to vent the device to an approved location. Following are some general guidelines and principles on the use of vented devices incorporating vent limiters:

(1) The listing requirements for vent limiters are covered in ANSI Z21.18/CSA 6.3, *Standard for Gas Appliance Pressure Regulators*, for regulators and in ANSI/UL 353, *Standard for Limit Controls*, for pressure switches and limit controls. ANSI Z21.18/CSA 6.3 requires a maximum allowable leakage rate of 2.5 ft^3/hr (0.071 m^3/hr) for natural gas and 1.0 ft^3/hr (0.028 m^3/hr) for LP-Gas at the device's maximum rated pressure. ANSI/UL 353 allows 1.0 ft^3/hr (0.028 m^3/hr) for natural gas and 1.53 ft^3/hr (0.043 m^3/hr) for LP-Gas at the device's maximum rated pressure. Since a vent limiter may be rated less than the device itself, or it may de-rate the device to a lower pressure rating, a combination listed device–vent limiter should be used.
(2) Where a vent limiter is used, there should be adequate airflow through the room or enclosure in which the equipment is installed. In reality, conditions can be less ideal, and care should be exercised for the following reasons:
    (a) The relative density of the gas influences its ability to disperse in air. The higher the relative density, the more difficult it is for the gas to disperse (e.g., propane disperses more slowly than natural gas).

Copyright 2014 National Fire Protection Association (NFPA). Licensed, by agreement, for individual use and download on October 4, 2014 to LEADER and READER for designated user PATTARAPORN SRITRAKOOL. No other reproduction or transmission in any form permitted without written permission of NFPA. For inquires or to report unauthorized use, contact licensing@nfpa.org.

(b) Airflow patterns through a room or enclosure, especially in the vicinity of the gas leak, affect the ability of the air to dilute that gas. The greater the local air movement, the greater the ease with which the gas is able to disperse.
(c) The vent limiter may not prevent the formation of a localized flammable air–gas concentration for the preceding reasons.

(3) Table A.6.2.6.4 shows various gases and their equivalent allowable leakage rates through a vent limiting device as per ANSI Z21.18/CSA 6.3, *Standard for Gas Appliance Pressure Regulator.*

The leakage rates are based on the maximum pressure rating for the device.

Table A.6.2.6.4 Allowable Leakage Rates of Various Gases

Gas Type	s.g. (based on air = 1.0)	Leakage Rate (ft^3/hr)
Natural gas	0.65	2.5
Propane	1.50	1.0
Butane	1.95	0.8

A.6.2.6.5 See A.6.2.6.4.

A.6.2.6.13 NFPA 86 does not address vents between safety shutoff valves, but they are sometimes installed.

A.6.2.6.13(2) See A.6.2.6.3.

A.6.2.7.3 Token relief valves only provide minimum pressure relief in cases where ambient temperatures increase the pressure inside the gas piping, which can occur during shutdown periods, or relieves small increases of pressure due to high lockup pressures that occur during a shutdown.

A.6.2.9.1 In the design, fabrication, and utilization of mixture piping, it should be recognized that the air–fuel gas mixture might be in the flammable range.

A.6.2.9.3(A) Two basic methods generally are used. One method uses a separate fire check at each burner, the other a fire check at each group of burners. The second method generally is more practical if a system consists of many closely spaced burners.

A.6.2.9.3(E) Acceptable safety blowouts are available from some manufacturers of air–fuel mixing machines. They incorporate all the following components and design features:

(1) Flame arrester
(2) Blowout disk
(3) Provision for automatically shutting off the supply of air–gas mixture to the burners in the event of a flashback passing through an automatic fire check

A.6.2.10.7 Testing of radiant tubes should include subjecting them to thermal cycling typical for the furnace application and then verifying their ability to withstand overpressure developed by a fuel–air explosion. Overpressure testing can be done in one of two ways:

(1) Statically pressurizing the tube until it fails, then comparing this pressure to the maximum pressure (from literature) that can be developed in a contained deflagration of an optimum fuel–air mixture.
(2) Partially blocking the open end of the tube to simulate a heat exchanger, then filling the tube with a well-mixed stoichiometric fuel–air mixture (10 volumes of air to 1 volume of fuel for natural gas). The mixture is ignited at the closed end of the tube, and the pressure that develops is measured and compared to the maximum pressure (from literature) that can be developed in a contained deflagration of an optimum fuel–air mixture.

A.6.2.11.1 A burner is suitably ignited when combustion of the air–fuel mixture is established and stable at the discharge port(s) of the nozzle(s) or in the contiguous combustion tunnel.

A.6.3 In the design and use of oil-fired units, the following factors should be considered.

(1) Unlike data on fuel gases, data on many important physical/chemical characteristics are not available for fuel oil, which, being a complex mixture of hydrocarbons, is relatively unpredictable.
(2) Fuel oil has to be vaporized prior to combustion. Heat generated by the combustion commonly is utilized for this purpose, and oil remains in the vapor phase as long as sufficient temperature is present. Under these conditions, oil vapor can be treated as fuel gas.
(3) Unlike fuel gas, oil vapor condenses into liquid when the temperature falls too low and revaporizes whenever the temperature rises to an indeterminate point. Therefore, oil in a cold furnace can lead to a hazardous condition, because, unlike fuel gas, it cannot be purged. Oil can vaporize (to become a gas) when, or because, the furnace operating temperature is reached.
(4) Unlike water, for example, there is no known relationship between temperature and vapor pressure for fuel oil. For purposes of comparison, a gallon of fuel oil is equivalent to 140 ft^3 (4.0 m^3) of natural gas; therefore, 1 oz (0.03 kg) of fuel oil equals approximately 1 ft^3 (0.03 m^3) of natural gas.

There are additional considerations beyond the scope of this standard that should be given to other combustible liquids not specified in Section 6.3.

A.6.3.2 For additional information, refer to NFPA 31, *Standard for the Installation of Oil-Burning Equipment.*

A.6.3.3.4 A long circulating loop, consisting of a supply leg, a back-pressure regulating valve, and a return line back to the storage tank, is a means of reducing air entrainment.

Manual vent valves might be needed to bleed air from the high points of the oil supply piping.

A.6.3.3.6 The weight of fuel oil is always a consideration in vertical runs. When the oil is going up, pressure is lost. A gauge pressure of 100 psi (689 kPa) with a 100 ft (30.5 m) lift nets only a gauge pressure of 63 psi (434 kPa). When the oil is going down, pressure increases. A gauge pressure of 100 psi (689 kPa) with a 100 ft (30.5 m) drop nets a gauge pressure of 137 psi (945 kPa). This also occurs with fuel gas but usually is of no importance; however, it should never be overlooked with fuel oil.

A.6.3.4.1(F) Lubricated plug valves require lubrication with the proper lubricant to shut off tightly. The application and type of gas used can require frequent lubrication to maintain the ability of the valve to shut off tightly when needed.

A.6.3.4.3 Customarily, a filter or strainer is installed in the supply piping to protect the pump. However, that filter or

Copyright 2014 National Fire Protection Association (NFPA). Licensed, by agreement, for individual use and download on October 4, 2014 to LEADER and READER for designated user PATTARAPORN SRITRAKOOL. No other reproduction or transmission in any form permitted without written permission of NFPA. For inquires or to report unauthorized use, contact licensing@nfpa.org.

strainer mesh usually is not sufficiently fine for burner and valve protection.

A.6.3.4.5 Under some conditions, pressure sensing on fuel oil lines downstream from feed pumps can lead to gauge failure when rapid pulsation exists. A failure of the gauge can result in fuel oil leakage. The gauge should be removed from service after initial burner startup or after periodic burner checks. An alternative approach would be to protect the gauge during service with a pressure snubber.

A.6.3.6.1 The atomizing medium can be steam, compressed air, low pressure air, air–gas mixture, fuel gas, or other gases. Atomization also can be mechanical (mechanical-atomizing tip or rotary cup).

A.6.3.8.1 A burner is suitably ignited when combustion of the air–fuel mixture is established and stable at the discharge port(s) of the nozzle(s) or in the contiguous combustion tunnel.

A.6.4 Oxy-fuel burners often are utilized in conjunction with arc melting furnaces to augment electric heating. Some of these burners utilize air as well. Stationary burners are attached to the furnace shell, cover, or both. Movable burners that normally are not attached to the furnace are suspended from structural members outside a furnace door. These burners are manipulated from the operating floor, and the oxygen and fuel are introduced into the furnace through long, concentric pipes.

Conventional flame safeguards are impractical in conjunction with oxy-fuel burners in arc furnaces because of the radio frequency noise associated with the arcs. The electric arc is a reliable means of ignition for the burners, once the arc has been established. After the arc has been established, the high temperatures inside an arc furnace cause the ignition of significant accumulations of oxygen and fuel.

Using oxygen to augment or to substitute for combustion air in industrial furnace heating systems presents new safety hazards for users acquainted only with air–fuel burners.

One group of hazards arises from the exceptional reactivity of oxygen. It is a potent oxidizer; therefore, it accelerates burning rates. It also increases the flammability of substances that generally are considered nonflammable in air. A fire fed by oxygen is difficult to extinguish.

Special precautions are needed to prevent oxygen pipeline fires, that is, fires in which the pipe itself becomes the fuel. Designers and installers of gaseous oxygen piping should familiarize themselves with standards and guidelines referenced in this standard on pipe sizing, materials of construction, and sealing methods. Gaseous oxygen should flow at relatively low velocity in pipelines built of ferrous materials, because friction created by particles swept through steel pipe at a high speed can ignite a pipeline. For that reason, copper or copper-based alloy construction is customary where the oxygen velocity needs to be high, such as in valves, valve trim areas, and orifices.

Oxygen pipelines should be cleaned scrupulously to rid them of oil, grease, or any hydrocarbon residues before oxygen is introduced. Valves, controls, and piping elements that come in contact with oxygen should be inspected and certified as "clean for oxygen service." Thread sealants, gaskets and seals, and valve trim should be oxygen-compatible; otherwise, they could initiate or promote fires. Proven cleaning and inspection methods are described in the Compressed Gas Association (CGA) publications listed in Annex M.

Furnace operators and others who install or service oxygen piping and controls should be trained in the precautions and safe practices for handling oxygen. For example, smoking or striking a welding arc in an oxygen-enriched atmosphere could start a fire. Gaseous oxygen has no odor and is invisible, so those locations in which there is a potential for leaks are off limits to smokers and persons doing hot work. The location of such areas should be posted. Persons who have been in contact with oxygen should be aware that their clothing is extremely flammable until it has been aired. Equipment or devices that contain oxygen should never be lubricated or cleaned with agents that are not approved for oxygen service.

Oxygen suppliers are sources of chemical material safety data sheets (MSDS) and other precautionary information for use in employee training. Users are urged to review the safety requirements in this standard and to adopt the recommendations.

Another group of hazards is created by the nature of oxy-fuel and oxygen-enriched air flames. Because they are exceptionally hot, these flames can damage burners, ruin work in process and furnace internals, and even destroy refractory insulation that was intended for air–fuel heating. Oxygen burner systems and heating controls should have quick-acting, reliable means for controlling heat generation.

Air that has been enriched with oxygen causes fuel to ignite easily, because added oxygen increases the flammability range of air–fuel mixtures. Therefore, pre-ignition purging is critical where oxygen is used.

Oxygen is also a hazard for persons entering furnaces to perform inspections or repairs. Strict entry procedures for confined spaces should be implemented. They should include analyses for excess oxygen (oxygen content in excess of 20.9 percent) in addition to the usual atmosphere tests for oxygen deficiency and flammability.

A.6.4.3.2 CGA G-4.4, *Industrial Practices for Gaseous Oxygen Transmission and Distribution Piping Systems*, specifies maximum gas velocity criteria, materials of construction, installation methods, joining methods, metering methods, use of filters, and specifications for oxygen-compatible sealing materials, gasket materials, and thread sealants.

A.6.4.3.3 See CGA G-4.1, *Cleaning Equipment for Oxygen Service.*

A.6.4.3.4 This requirement is intended to prevent the contamination of surfaces that must be clean for oxygen service from the oil normally present in plant compressed air.

A.6.4.3.8 See A.6.2.6.3

A.6.4.3.10 See CGA G-4.4, *Industrial Practices for Gaseous Oxygen Transmission and Distribution Piping Systems.*

A.6.4.3.12 Commercial grade carbon steel pipe exhibits a marked reduction in impact strength when cooled to subzero temperatures. Consequently, it is vulnerable to impact fracture if located downstream from a liquid oxygen vaporizer running beyond its rated vaporization capacity or at very low ambient temperatures.

A.6.4.5.2 Diffusers commonly are used to disperse oxygen into an airstream, effecting rapid and complete mixing of the oxygen into the air. High-velocity impingement of oxygen is a potential fire hazard.

A.6.5.2(2) The following sample calculation is provided to demonstrate a method of determining the required exhaust flow moving through the collecting and venting system for unsupervised radiant tube burners such that the atmosphere in the collecting and venting system is less than 100 percent

Copyright 2014 National Fire Protection Association (NFPA). Licensed, by agreement, for individual use and download on October 4, 2014 to LEADER and READER for designated user PATTARAPORN SRITRAKOOL. No other reproduction or transmission in any form permitted without written permission of NFPA. For inquires or to report unauthorized use, contact licensing@nfpa.org.

LFL equals noncombustible state requirement. The sample calculation is based on the following assumptions:

(1) The fuel is methane gas.
(2) All burners are not firing.
(3) All burner fuel valves are open.
(4) The main safety shutoff valve is open.

Overall, the sample calculation is based on the following conservative conditions:

(1) Use of the maximum fuel input rate for each burner
(2) Assumption that all burner fuel valves are open
(3) The design limit of <100% of LFL = noncombustible state
(4) Inclusion of the effects of elevated furnace temperature on the LFL
(5) The use of ambient air to dilute the products of combustions exiting the radiant tubes and being conveyed in the collecting and venting system

The effects of temperature on fuel gas LFL were obtained from Bureau of Mines Bulletin 680, "Investigation of Fire and Explosion Accidents in the Chemical, Mining, and Fuel-Related Industries — A Manual." Figure 34 in that bulletin, "Temperature effect on lower limits of flammability of 10 normal paraffins in air at atmospheric pressure," shows temperature (°C) versus combustibles (volume percent) and includes curves for methane, butane, and propane. It also includes a formula for computing LFL at elevated temperature. The formula, from Bureau of Mines Bulletin 627, "Flammability Characteristics of Combustible Gases and Vapors," is as follows:

$$L_T = L_{25}\left[1 - 0.000721\left(T - 25^\circ\text{C}\right)\right] \quad \textbf{[A.6.5.2(2)a]}$$

where:
L_T = LFL at the desired elevated temperature T (°C)
L_{25} = LFL at 25°C
T = Desired elevated temperature (°C)

Sample Problem — U.S. Customary Units

Objective. Calculate the exhaust flow moving through the collecting and venting system for unsupervised radiant tube burners so as to maintain the collecting and venting system atmosphere below 100% LFL (i.e., noncombustible state).

Given the following information:

(1) Furnace type: Continuous
(2) Fuel: Methane
(3) Number of burners: 10
(4) Maximum fuel input per burner: 600 scfh
(5) Furnace temperature: 1200°F
(6) Radiant tube exhaust temperature: 2000°F
(7) Collecting and venting system temperature: 500°F, or 260°C

Step 1. Determine LFL at 500°F (which will be the same as the LFL at 260°C) using the formula from above.

[A.6.5.2(2)b]

$$\begin{aligned} L_{500^\circ\text{F}} = L_{260^\circ\text{C}} &= L_{25^\circ\text{C}}\left[1 - 0.000721\left(T - 25^\circ\text{C}\right)\right] \\ &= 5.3\left[1 - 0.000721\left(260^\circ\text{C} - 25^\circ\text{C}\right)\right] \\ &= 4.4\% \text{ by volume} \end{aligned}$$

Step 2. Determine exhaust flow at 70°F to control fuel input to <100% LFL.

[A.6.5.2(2)c]

$$\begin{aligned} &Q_{\text{EXH } 70^\circ\text{F \& } 100\% \text{ LFL}} > \left(Q_{\text{FUEL INPUT}}\right) \cdot \left[(1.0)\% \text{ exhaust volume}\right] \\ &/\left[\frac{\left(LFL_{\text{T FCE TEMP}}\right)}{(1.0)\% \text{ fuel volume at } 100\% \text{ LFL}}\right] \\ &> \left[(600 \text{ scfh/burner})(10 \text{ burners})(1 \text{ hr}/60 \text{ min})\right] \\ &\cdot (1.0) \ / \ (0.044)(1.0) > 2.272 \text{ scfm @ } 70^\circ\text{F} \end{aligned}$$

Step 3. Determine the temperature correction factor for volume. This formula is similar to the temperature correction factor formula used in 11.6.5.1.

[A.6.5.2(2)d]

$$\begin{aligned} T_{\text{CF VOL}} &= \left(T_{\text{EXH TEMP}} + 460^\circ\text{F}\right)/\left(70^\circ\text{F} + 460^\circ\text{F}\right) \\ &= \left(500^\circ\text{F} + 460^\circ\text{F}\right)/\left(70^\circ\text{F} + 460^\circ\text{F}\right) \\ &= 1.81 \end{aligned}$$

Step 4. Determine exhaust flow at collection and venting system operating temperature to limit fuel input rate to 100% LFL at $T_{\text{FCE TEMP}}$.

[A.6.5.2(2)e]

$$\begin{aligned} Q_{\text{EXH } 500^\circ\text{F \& } 100\% \text{ LFL}} &> Q_{\text{EXH } 70^\circ\text{F \& } 100\% \text{ LFL}}\left(T_{\text{CF VOL}}\right) \\ &> \left(2272 \text{ cfm @ } 70^\circ\text{F}\right)(1.81) \\ &> 4112 \text{ cfm @ } 500^\circ\text{F} \end{aligned}$$

Conclusion. The calculated exhaust rate of >4112 scfm @ 500°F is required to keep the collecting and venting system <100% LFL at its operating temperature with all burners off and fuel gas flowing at the maximum input rate.

Sample Problem — SI Units

Objective. Calculate the exhaust flow moving through the collecting and venting system for unsupervised radiant tube burners so as to maintain the collecting and venting system atmosphere below 100% LFL (i.e., noncombustible state).

Given the following information:

(1) Oven type: Continuous
(2) Fuel: Methane
(3) Number of burners: 10
(4) Maximum fuel input per burner: 16.99 m^3/hr @ 21°C
(5) Furnace temperature: 649°C
(6) Radiant tube exhaust temperature: 1093°C
(7) Collecting and venting system temperature: 500°F (260°C)

Step 1. Determine LFL at 260°C using the formula from above:

[A.6.5.2(2)f]

$$\begin{aligned} L_{500^\circ\text{F}} = L_{260^\circ\text{C}} &= L_{25^\circ\text{C}}\left[1 - 0.000721\left(T - 25^\circ\text{C}\right)\right] \\ &= 5.3\left[1 - 0.000721\left(260^\circ\text{C} - 25^\circ\text{C}\right)\right] \\ &= 4.4\% \text{ by volume} \end{aligned}$$

Step 2. Determine exhaust airflow at 21°C to control fuel input to <100% LFL. This formula follows an approach similar to that given in Chapter 11.

[A.6.5.2(2)g]

$$\begin{aligned} &Q_{\text{EXH } 21^\circ\text{C \& } 25\% \text{ LFL}} > \left(Q_{\text{FUEL INPUT}}\right) \cdot \left[(1.0)\% \text{ exhaust vol.}\right] \\ &/ \ \left[\left(LFL_{\text{T FCE TEMP}}\right)(1.0)\% \text{ fuel vol. at } 25\% \text{ LFL}\right] \\ &> \left[\left(16.99 \text{ m}^3/\text{hr @ } 21^\circ\text{C/burner}\right)(10 \text{ burners})(1 \text{ hr}/60 \text{ min})\right] \\ &\cdot (1.0)/(0.044)(1.0) \\ &> 64.33 \text{ m}^3/\text{min @ } 21^\circ\text{C} \end{aligned}$$

Copyright 2014 National Fire Protection Association (NFPA). Licensed, by agreement, for individual use and download on October 4, 2014 to LEADER and READER for designated user PATTARAPORN SRITRAKOOL. No other reproduction or transmission in any form permitted without written permission of NFPA. For inquires or to report unauthorized use, contact licensing@nfpa.org.

Step 3. Determine the temperature correction factor for volume. This formula is similar to the temperature correction factor formula used in Chapter 11.

[A.6.5.2(2)h]

$$T_{\text{CF VOL}} = \left(T_{\text{EXH TEMP}} + 273^{\circ}\text{C}\right) / \left(21^{\circ}\text{C} + 273^{\circ}\text{C}\right)$$
$$= \left(260^{\circ}\text{C} + 273^{\circ}\text{C}\right) / \left(21^{\circ}\text{C} + 273^{\circ}\text{C}\right)$$
$$= 1.81$$

Step 4. Determine exhaust flow at oven operating temperature to limit fuel input rate to 100% LFL at $T_{\text{FCE TEMP}}$. This formula follows an approach similar to that given in Chapter 11:

[A.6.5.2(2)i]

$$Q_{\text{EXH 260°C \& 100\% LFL}} > Q_{\text{EXH 21°C 100\% LFL}}\left(T_{\text{CF VOL}}\right)$$
$$> \left(64.33\ \text{m}^3/\text{min @ } 21^{\circ}\text{C}\right)(1.81)$$
$$> 116.63\ \text{m}^3/\text{min @ } 260^{\circ}\text{C}$$

Conclusion. The calculated exhaust rate of >116.63 m^3 @ 260°C is required to keep the collecting and venting system <100% LFL at its operating temperature with all burners off and fuel gas flowing at the maximum input rate.

A.6.5.2(3) The designer and user are cautioned that hazard conditions can result in common exhaust systems even when the radiant tube burners connected to the common exhaust system are equipped with flame supervision.

A.6.6.2 Vacuum furnaces using induction, resistance, electron beam, plasma arc, or electric arc heating systems include an electric power supply with a high demand current. High voltage supply used for electron beam, plasma arc, or ion discharge furnace units can have unique safety considerations.

A.6.6.4.2(A) Transformers should be of the dry, high fire point type or the less flammable liquid type. Dry transformers should have a 270°F (150°C) rise insulation in compliance with Section 4.03 of NEMA TR 27, *Commercial, Institutional and Industrial Dry-Type Transformers.*

A.6.7 Fluid heating systems are used to heat lumber dry kilns, plywood veneer dryers, carpet ranges, textile ovens, and chemical reaction vessels. A fluid heating system typically consists of a central heat exchanger to heat the thermal fluid. Firing can be by conventional gas or oil burners. The hot gases pass through a heat exchanger to heat the thermal fluid indirectly. The heat exchanger can be a separate, stand-alone unit or an integral part of the heater. Conventional water-tube boilers have been used as heaters, with thermal fluid replacing the water.

In addition to steam and water, special oils have been developed for this type of application, with flash points of several hundred degrees Fahrenheit. For maximum thermal efficiency, the oils are usually heated above their flash points, making an oil spill especially hazardous. Also, because of the high oil temperatures, it is usually necessary to keep the oil circulating through the heat exchanger at all times to prevent oil breakdown and tube fouling. Diesel-driven pumps or emergency generators are usually provided for this purpose in case of a power outage. Oil circulation can be needed for a period of time even after burner shutdown because of residual heat in the heater.

A.6.7.1.1 Suitable relief valves should be provided where needed. Where relief valves are provided, they should be piped to a safe location. See design criteria in API STD 520 P1, *Sizing, Selection, and Installation of Pressure-Relieving Devices in Refineries, Part 1: Sizing and Selection,* and API RP 520 P2, *Sizing, Selection, and Installation of Pressure-Relieving Devices in Refineries, Part 2: Installation.*

A.6.7.1.3 If a combustible heat transfer fluid is used, consideration should be given to the use of automatic actuating fire-safe isolation valves. The actuating mechanism should operate even when it is exposed to high temperatures. Fireproofing of the mechanism to maintain operational integrity might be necessary.

A fire-safe valve is one that provides a relatively tight valve-seat shutoff during temperatures that are high enough to destroy seals. The stem packing and gasketed body joints must also be relatively liquidtight during exposure to high temperatures.

A.7.1.1 Commissioning might be required again following modification, reactivation, or relocation of the furnace.

A.7.1.3 Typically, inspection and leak tests of furnace piping that conveys flammable liquids or flammable gases are performed at a pressure not less than their normal operating pressure.

A.7.1.4.1 The testing and verification of the burner management system logic should be completed by a competent person other than the system designer.

A.7.1.6 It is recommended that all system settings and parameters are documented for future maintenance and operational needs.

A.7.1.7 The evacuation/purging, charging, and confirmation of the fuel or flammable gas supply in the piping upstream of the equipment isolation valve is governed by other codes, standards, and recommended practices. One example is Section 8.3 of NFPA 54, which establishes requirements based upon the fuel gas pressure, pipe size, and pipe length. Careful consideration should be given to the potential hazards that can be created in the surrounding area for any fuel or flammable gas discharge.

In NFPA 54, the term *appliance shutoff valve* is analogous to the term *equipment isolation valve* in NFPA 86.

NFPA 54 does not address the use of nitrogen for an inert purge and its property as an asphyxiant, nor does it address how to monitor that nitrogen has displaced sufficient oxygen in the piping system prior to the introduction of flammable gas. In this regard, 7.3.5 of NFPA 56 is helpful in identifying the requirements for an oxygen detector and 7.2.2.3 is helpful for determining an adequate inert (oxygen depleted) condition.

Paragraphs 7.1.2.1 and 7.1.2.2 of NFPA 56 might also be helpful in engaging the involvement of the fuel gas supplier with the evacuation and charging procedure and implementation.

A.7.2.1 The training program might include one or more of the following components:

(1) Review of operating and maintenance information
(2) Periodic formal instruction
(3) Use of simulators
(4) Field training
(5) Other procedures
(6) Comprehension testing

The following training topics should be considered for inclusion when the training program is being developed:

(1) Process and equipment inspection testing
(2) Combustion of fuel–air mixtures

Copyright 2014 National Fire Protection Association (NFPA). Licensed, by agreement, for individual use and download on October 4, 2014 to LEADER and READER for designated user PATTARAPORN SRITRAKOOL. No other reproduction or transmission in any form permitted without written permission of NFPA. For inquires or to report unauthorized use, contact licensing@nfpa.org.

(3) Explosion hazards, including improper purge timing and purge flow and safety ventilation
(4) Sources of ignition, including auto-ignition (e.g., by incandescent surfaces)
(5) Functions of controls, safety devices, and maintenance of proper set points
(6) Handling of special atmospheres
(7) Handling of low-oxygen atmospheres
(8) Handling and processing of hazardous materials
(9) Confined space entry procedures
(10) Operating instructions (see 7.4.2)
(11) Lockout/tagout procedures
(12) Hazardous conditions resulting from interaction with surrounding processes
(13) Fire protection systems
(14) Molten material
(15) Quench systems

A.7.3.4 See Annex B, Annex C, Annex G, or Annex H, as appropriate.

A.7.3.8 Examples of different modes of operations are oil vs. gas vs. other fuel; dry-out/pre-heat; auto/manual; and normal/standby.

A.7.4.5 In cases where minimal operating states, such as safety ventilation, must be established to prevent a hazardous condition, it is recommended that the precision of the set point be confirmed. When precision is inadequate, the component should be either recalibrated or replaced. Frequency of this testing and calibration should be established based on the components' mean time between failures (MTBF) data and the component manufacturer's recommendations.

A.7.4.9 The following is an example of a leak test procedure for safety shutoff valves on direct gas-fired ovens with a self-piloted burner and intermittent pilot. With the oven burner(s) shut off, the main shutoff valve open, and the manual shutoff valve closed, the procedures are as follows:

(1) Place the tube in test connection 1, immersed just below the surface of a container of water.
(2) Open the test connection valve. If bubbles appear, the valve is leaking, and the manufacturer's instructions should be referenced for corrective action. Energize the auxiliary power supply to safety shutoff valve No. 1 and open that valve.
(3) Place the tube in test connection 2, immersed just below the surface of a container of water.
(4) Open the test connection valve. If bubbles appear, the valve is leaking. Reference the manufacturer's instructions for corrective action.

This procedure is predicated on the piping diagram shown in Figure A.7.4.9(a) and the wiring diagram shown in Figure A.7.4.9(b).

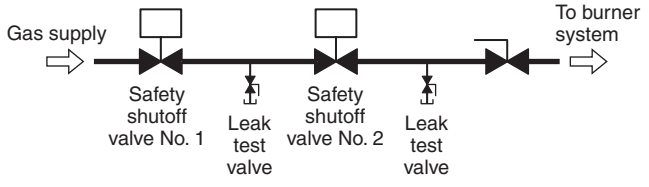

FIGURE A.7.4.9(a) Example of a Gas Piping Diagram for Leak Test.

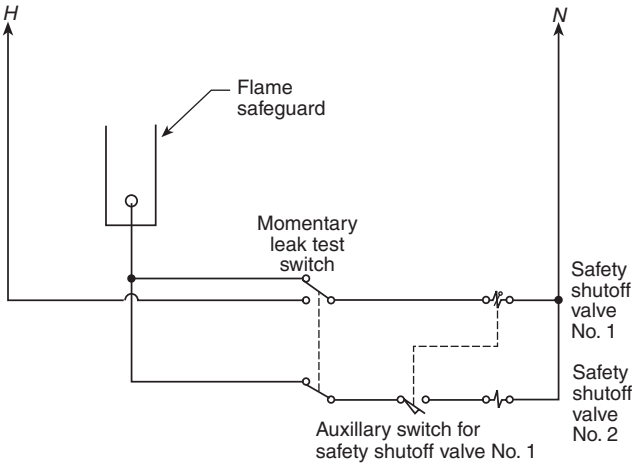

FIGURE A.7.4.9(b) Example of a Wiring Diagram for Leak Test.

It is recognized that safety shutoff valves are not entirely leak free. Because valve seats can deteriorate over time, they require periodic leak testing. Many variables are associated with the valve seat leak testing process, including gas piping and valve size, gas pressure and specific gravity, size of the burner chamber, length of downtime, and the many leakage rates published by recognized laboratories and other organizations.

Leakage rates are published for new valves and vary by manufacturer and the individual listings to which the manufacturer subscribes. It is not expected that valves in service can be held to these published leakage rates, but rather that the leakage rates are comparable over a series of tests over time. Any significant deviation from the comparable leakage rates over time will indicate to the user that successive leakage tests can indicate unsafe conditions. These conditions should then be addressed by the user in a timely manner.

The location of the manual shutoff valve downstream of the safety shutoff valve affects the volume downstream of the safety shutoff valve and is an important factor in determining when to start counting bubbles during a safety shutoff valve seat leakage test. The greater the volume downstream of the safety shutoff valve, the longer it will take to fully charge the trapped volume in the pipe between the safety shutoff valve and the manual shutoff valve. This trapped volume needs to be fully charged before starting the leak test.

Care should be exercised when performing the safety shutoff valve seat leakage test, because flammable gases will be released into the local environment at some indeterminate pressure. Particular attention should be paid to lubricated plug valves used as manual shutoff valves to ensure that they have been properly serviced prior to the valve seat leakage test.

The publications listed in Annex M include examples, although not all inclusive, of acceptable leakage rate methodologies that the user can employ.

Figure A.7.4.9(a) through Figure A.7.4.9(c) show examples of gas piping and wiring diagrams for leak testing.

Example. The following example is predicated on the piping diagram shown in Figure A.7.4.9(a) and the wiring diagram shown in Figure A.7.4.9(b).

Copyright 2014 National Fire Protection Association (NFPA). Licensed, by agreement, for individual use and download on October 4, 2014 to LEADER and READER for designated user PATTARAPORN SRITRAKOOL. No other reproduction or transmission in any form permitted without written permission of NFPA. For inquires or to report unauthorized use, contact licensing@nfpa.org.

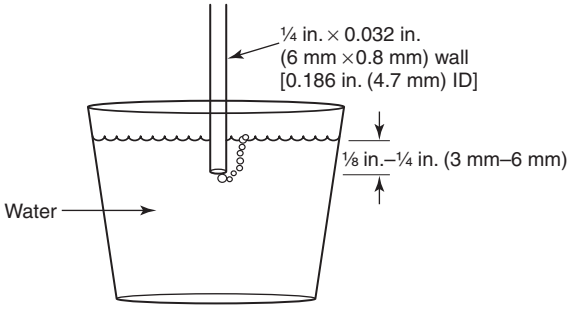

FIGURE A.7.4.9(c) Leak Test for a Safety Shutoff Valve.

With the oven burner(s) shut off, the equipment isolation valve open, and the manual shutoff valve located downstream of the second safety shutoff valve closed, the procedures are as follows:

(1) Connect the tube to leak test valve No. 1.
(2) Bleed trapped gas by opening leak test valve No. 1.
(3) Immerse the tube in water as shown in Figure A.7.4.9(c). If bubbles appear, the valve is leaking. Reference the manufacturer's instructions for corrective action. Examples of acceptable leakage rates are given in Table A.7.4.9(a).
(4) Apply auxiliary power to safety shutoff valve No. 1. Close leak test valve No. 1. Connect the tube to leak test valve No. 2 and immerse it in water as shown in Figure A.7.4.9(c).
(5) Open leak test valve No. 2. If bubbles appear, the valve is leaking. Reference the manufacturer's instructions for corrective action. Examples of acceptable leakage rates are given in Table A.7.4.9(a).

$$L = \frac{|\Delta p| \times V_{test} \times 3600}{P_{atm} \times T_{test}} \qquad \text{[A.7.4.9]}$$

where:
L = leakage rate (cm^3/hr)
$|\Delta p|$ = absolute value of initial test pressure (mbar) — final test pressure (mbar)
V_{test} = total volume of the test (cm^3)
P_{atm} = atmospheric pressure (atmospheres)
T_{test} = test time (seconds)

Conversion factors
1 in. water col. = 2.44 mbar
1 psi = 27.7 in. water col.
1 atmosphere = 14.7 psi

This test method can be done by tapping into the following ports and performing the test method in Table A.7.4.9(b).

Table A.7.4.9(b) Test Methods.

Test Port Location	Test Method
A test port between both safety shutoff valves	Pressure decay on V_2 Pressure rise on V_1
A test port downstream of both safety shutoff valves	Pressure rise on V_1 and V_2 (requires manual shutoff valve downstream both safety shutoff valves and that it be leak tightness tested).
A test port upstream of both valves	Pressure decay on V_1 and V_2 (requires a leak tightness test on the upstream, manual isolation valve)

A.7.4.10.2 Where a means is not provided to count the actual number of safety shutoff valve cycles, it becomes a maintenance responsibility to maintain an estimate of safety shutoff valve cycles so that the safety shutoff valve is replaced before it exceeds 90 percent of the life cycles established by the safety shutoff valve manufacturer.

A.7.4.12 Lubricated plug valves require lubrication with the proper lubricant in order to shut off tightly. The application and type of gas used can require frequent lubrication to maintain the ability of the valve to shut off tightly when needed.

A.7.4.13 Exercising the valve means that the valve is operated but not necessarily through the full range.

A.7.4.14 See CGA G-4.1, *Cleaning Equipment for Oxygen Service,* and CGA G-4.4, *Industrial Practices for Gaseous Oxygen Transmission and Distribution Piping Systems.*

Table A.7.4.9(a) Acceptable Leakage Rates

NPT Nominal Size (in.)	DN Nominal Size (mm)	UL 429, ANSI Z21.21/CSA 6.5				FM 7400				EN 161			
		ft^3/hr	mL/hr cc/hr	mL/min cc/min	Bubbles/ min	ft^3/hr	mL/hr cc/hr	mL/min cc/min	Bubbles/ min	ft^3/hr	mL/hr cc/hr	mL/min cc/min	Bubbles/ min
0.38	10	0.0083	235	3.92	26	0.014	400	6.7	44	0.0014	40	0.67	4
0.50	15	0.0083	235	3.92	26	0.014	400	6.7	44	0.0014	40	0.67	4
0.75	20	0.0083	235	3.92	26	0.014	400	6.7	44	0.0014	40	0.67	4
1.00	25	0.0083	235	3.92	26	0.014	400	6.7	44	0.0014	40	0.67	4
1.25	32	0.0083	235	3.92	26	0.014	400	6.7	44	0.0021	60	1.00	7
1.50	40	0.0124	353	5.88	39	0.014	400	6.7	44	0.0021	60	1.00	7
2.00	50	0.0166	470	7.83	52	0.014	400	6.7	44	0.0021	60	1.00	7
2.50	65	0.0207	588	9.79	65	0.014	400	6.7	44	0.0021	60	1.00	7
3.00	80	0.0249	705	11.75	78	0.014	400	6.7	44	0.0035	100	1.67	11
4.00	100	0.0332	940	15.67	104	0.014	400	6.7	44	0.0035	100	1.67	11
6.00	150	0.0498	1,410	23.50	157	0.014	400	6.7	44	0.0053	150	2.50	17
8.00	200	0.0664	1,880	31.33	209	0.014	400	6.7	44	0.0053	150	2.50	17

Copyright 2014 National Fire Protection Association (NFPA). Licensed, by agreement, for individual use and download on October 4, 2014 to LEADER and READER for designated user PATTARAPORN SRITRAKOOL. No other reproduction or transmission in any form permitted without written permission of NFPA. For inquires or to report unauthorized use, contact licensing@nfpa.org.

A.7.4.15 The intent is to verify that the temperature indicator of the excess temperature controller is reading correctly.

A.7.4.19 See A.6.2.6.3.

A.7.6 Procedures for confined space entry can be found in 29 CFR 1910.146, "Permit-Required Confined Spaces," and ANSI Z117.1, *Safety Requirements for Confined Spaces*. Information on hazards of chemicals can be found in *NIOSH Pocket Guide to Chemical Hazards*.

A.8.1 For the protection of personnel and property, consideration should be given to the supervision and monitoring of conditions that could cause or that could lead to a potential hazard on any installation.

A.8.2.1 A flame rod is not required to be listed.

A.8.2.2 The AHJ should consider reliability and durability during the selection process when approving a device.

A.8.2.3 Consideration should be given to the effects of radiant heat on the safety devices. Radiant heat can cause safety devices to be exposed to temperatures greater than their ratings. Adequate insulation, heat shields, ventilation, or other measures should be used in cases where radiant heat causes safety devices to reach temperatures above their ratings.

A.8.2.9 The actions resulting from a manual emergency switch action take into account the individual system design and the hazards (e.g., mechanical, combustion system, special atmosphere, etc.) associated with changing the existing state to another state and initiates actions to cause the system to revert to a safe condition.

For some applications, additional manual action may be required to bring the process to a safe condition.

A.8.2.10 The manual intervention applies only to shutdowns of a safety function. Safety devices such as burner safeguard controllers can contain non-safety-related control sequences that can shut down the heating system due to a process control function, such as temperature control. Even though the action is within a safety device, the shutdown is not by a safety function.

A.8.2.11 A single pressure transmitter with associated logic can be used to provide both of the required low and high pressure interlock functions. A single flow transmitter with associated logic can be used to provide both of the required low and high flow interlock functions.

A.8.3 Furnace controls that meet the performance-based requirements of standards such as ANSI/ISA 84.00.01, *Application of Safety Instrumented Systems for the Process Industries*, and IEC 61511, *Functional Safety: Safety Instruments Systems for the Process Industry Sector*, can be considered equivalent. The determination of equivalency will involve complete conformance to the safety life cycle including risk analysis, safety integrity level selection, and safety integrity level verification, which should be submitted to the authority having jurisdiction.

A.8.3.1.4 The control circuit and its non–furnace-mounted or furnace-mounted control and safety components should be housed in a dusttight panel or cabinet, protected by partitions or secondary barriers, or separated by sufficient spacing from electrical controls employed in the higher voltage furnace power system. Related instruments might or might not be installed in the same control cabinet. The door providing access to this control enclosure might include means for mechanical interlock with the main disconnect device required in the furnace power supply circuit.

Temperatures within this control enclosure should be limited to 125°F (52°C) for suitable operation of plastic components, thermal elements, fuses, and various mechanisms that are employed in the control circuit.

A.8.4 The PLC approach to combustion interlocks–multiburner is as follows:

(1) Interlocks relating to purge are done via PLC.
(2) The purge timer is implemented in PLC.
(3) Interlocks relating to combustion air and gas pressure are done via PLC.
(4) Gas valves for pilots and burners directly connected to flame safeguards must conform to the requirements of 8.8.2.
(5) Operation of pilot and burner gas valves must be confirmed by the PLC.
(6) A PLC can be set up as intermittent, interrupted, or constant pilot operation. With an appropriate flame safeguard, it would be possible to provide an interrupted pilot with one flame sensor and one flame safeguard.

A.8.4.2 Compliance with the manufacturer's safety manual would achieve actions such as, but not limited to, the PLC detecting the following:

(1) Failure to execute any program or task containing safety logic
(2) Failure to communicate with any safety I/O
(3) Changes in software set points of safety functions
(4) Failure of outputs related to safety functions
(5) Failure of timing related to safety functions

An SIL 3–capable PLC includes third-party certification, the actions above, and partitioning to separate safety logic from process logic.

The requirements for SIL capability in 8.4.2 pertain only to the PLC and its I/O and not to the implementation of the burner management system. The purpose of the SIL capability requirement is to provide control reliability.

A.8.4.4 The burner management system logic, memory, and I/O should be characterized by the following:

(1) Independent from nonsafety logic and memory
(2) Protected from alteration by non–BMS logic or memory access
(3) Protected from alteration by unauthorized users

A.8.4.4(A)(4) This standard requires that the signal from the safety device be directly transmitted to the safety PLC input. Once the safety PLC processes the signal the resulting data can be used for any purpose.

A.8.5.1.1 Procedures for admitting and withdrawing flammable special processing atmospheres are covered in Chapter 13.

In some applications, purging with the furnace doors open could force combustible or indeterminate gases into the work area and the area surrounding the furnace, thereby creating a potential hazard to those areas. Purging with the doors closed ensures that furnace gases exit out of the furnace through the intended flue or exhaust system.

Igniting the furnace burners with the furnace doors open is an effective way to avoid containment during the ignition cycle.

Copyright 2014 National Fire Protection Association (NFPA). Licensed, by agreement, for individual use and download on October 4, 2014 to LEADER and READER for designated user PATTARAPORN SRITRAKOOL. No other reproduction or transmission in any form permitted without written permission of NFPA. For inquires or to report unauthorized use, contact licensing@nfpa.org.

A.8.5.1.2 Equipment that is not explosion resistant, has no combustion air blower or exhaust blower, and relies on a natural draft to meet the purge requirements of this 8.5.1.2, should address the following conditions to ensure conformance:

(1) The natural draft flow rate can be affected by furnace doors, covers, and dampers. If the purge rate and timing depend on the setting of these devices, they should be interlocked to meet the requirements in 8.5.1.2(C)(1), 8.5.1.2(D), and 8.5.1.2(E).
(2) The proof of minimum required purge flow should handle cases in which the natural draft flow rate can be affected by differences in pressure between the heating chamber and the inside or outside of the building.
(3) The specific gravity of the fuel must be considered in the design of the furnace purge path. For example, there should be no collection areas at the bottom of the heating chamber with a heavier-than-air fuel gas.
(4) If the purge flow rate is not known or is not directly proved, then the purge time to be set in the timer should be determined by measurement. The party commissioning the burner system is responsible for this measurement and the documentation. The measurement should be conducted at the time when the furnace is at normal ambient temperature and is at its lowest purge flow rate. Confirming calculations and measurement data should be available for review in accordance with Chapter 7. Combustible gas analyzers and oxygen analyzers should be used to measure the time from the end of unburned gas release for the trial-for-ignition period until the combustible concentration of the system volume is below 25 percent LFL. The test should be repeated immediately for a second release of gas and time delay to ensure that the measurement is still below 25 percent LFL. If it is not, then the purge time must be increased, with repeated purge and trial-for-ignition sequences, until there is no successive buildup of the combustible concentration.

A.8.5.1.2(C)(1) Equipment such as thermal oxidizers commonly process sources of contaminated air. Contaminated air is an indeterminate purge medium. Design of the pre-ignition airflow interlocks should incorporate a means to prove a source of fresh air and also prove the isolation of contaminated air sources during pre-ignition purge. In complex systems involving multiple sources where it is not always possible to shut down all indeterminate sources, providing a fresh air source and positive isolation from all contaminated sources is necessary to ensure proper pre-ignition purging.

A.8.5.1.2(C)(2) See Figure A.8.5.1.2(C)(2)

A.8.5.1.8 The following sections of this standard continue to apply where the provisions of 8.5.1.8 are applied:

(1) The combustion air safety device requirements of Section 8.7.
(2) Each burner and pilot is supervised by a combustion safeguard in accordance with Section 8.10.
(3) Each burner system is equipped with safety shutoff valves in accordance with Section 8.8.

A.8.5.1.8(2)(a) Consideration should be given to the proximity of operating burners when the common combustion chamber exception to repeating purges is utilized. Accumulation of localized vapors or atmospheres is possible even with an operating burner in a chamber, depending on the size of the chamber, the number of burners, and the proximity of operating burners to

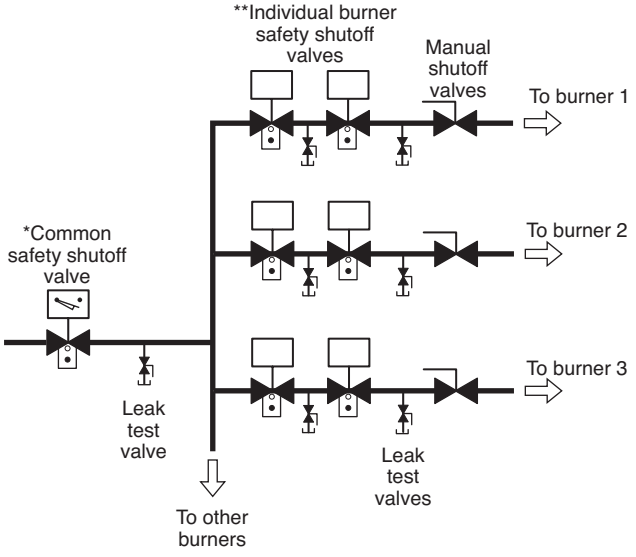

*Indicates a proof of closure switch. A valve proving system may also be an option.
**Indicates position indication. Where the individual burner inputs are under 150,000 Btu/h position indication is not required.

FIGURE A.8.5.1.2(C)(2) Example for Multiple Burner System with Independently Operated Burners Using a Common SSOV with Single Proved Closed Interlock for Pre-purge.

the accumulation. In addition to proximity, burner design and exposure of the flame may also impact the ability of the operating burner to mitigate vapor or gaseous accumulations.

A.8.5.1.8(3) The following sample calculation is provided to demonstrate a method of determining the 25 percent LFL requirement. The calculation is based on the following assumptions:

(1) The fuel is methane gas.
(2) All burners are off, and all safety shutoff valves are de-energized.
(3) All burner safety shutoff valves fail to function and remain full open during the period that the burners are off.
(4) Safety shutoff valve leakage is equal to the maximum burner fuel input rate.

Overall, the sample calculation is based on the following conservative conditions:

(1) The use of the maximum fuel input rate for each burner
(2) Failure of all burner safety shutoff valves fail to close
(3) Design limit of 25 percent of LFL
(4) Inclusion of the effects of elevated furnace temperature on the LFL

The effects of temperature on fuel gas LFL were obtained from Bureau of Mines Bulletin 680, "Investigation of Fire and Explosion Accidents in the Chemical, Mining, and Fuel-Related Industries — A Manual." Figure 34 in that bulletin, "Temperature effect on lower limits of flammability of 10 normal paraffins in air at atmospheric pressure," shows temperature (°C) versus combustibles (volume percent) and includes curves for methane, butane, and propane. It also includes a

Copyright 2014 National Fire Protection Association (NFPA). Licensed, by agreement, for individual use and download on October 4, 2014 to LEADER and READER for designated user PATTARAPORN SRITRAKOOL. No other reproduction or transmission in any form permitted without written permission of NFPA. For inquires or to report unauthorized use, contact licensing@nfpa.org.

formula for computing LFL at elevated temperature. That formula, from Bureau of Mines Bulletin 627, "Flammability Characteristics of Combustible Gases and Vapors," as follows:

$$L_T = L_{25}\left[1 - 0.000721\left(T - 25^\circ\text{C}\right)\right] \quad \textbf{[A.8.5.1.8(3)]}$$

where:
L_T = LFL at the desired elevated temperature, T (°C)
L_{25} = LFL at 25°C
T = Desired elevated temperature (°C)

Sample Problem — U.S. Customary Units

Objective. Calculate the airflow rate moving through the oven enclosure to maintain the oven atmosphere at or below 25 percent LFL.

Given the following information:

(1) Oven type: Continuous
(2) Fuel: Methane
(3) Number of burners: 5
(4) Maximum fuel input per burner: 1000 scfh
(5) Oven temperature: 275°F
(6) Exhaust airflow rate: 10,000 cfm

Step 1. Determine LFL at 275°F using the formula from Bureau of Mines Bulletin 627:

$$\begin{aligned} L_{275^\circ\text{F}} = L_{135^\circ\text{C}} &= L_{25^\circ\text{C}}\left[1 - 0.000721\left(\text{T} - 25^\circ\text{C}\right)\right] \\ &= 5.3\left[1 - 0.000721\left(135^\circ\text{C} - 25^\circ\text{C}\right)\right] \\ &= 4.9\% \text{ by volume} \end{aligned}$$

Step 2. Determine exhaust flow at 70°F to control fuel input to 25% LFL. This formula follows an approach similar to that given in 11.6.8.3.

$$\begin{aligned} Q_{\text{EXH 70°F \& 25\% LFL}} &= \left(Q_{\text{FUEL INPUT}}\right) \bullet \left[(1.0)\ \%\ \text{exhaust volume}\right] \\ &\quad / \left[\left(LFL_{\text{T FCE TEMP}}\right)(0.25)\%\ \text{fuel volume at 25\% LFL}\right] \\ &= \left[(1000\ \text{scfh/burner})(5\ \text{burners})(1\ \text{hr}/60\ \text{min})\right] \bullet (1.0) \\ &\quad / (0.049)(0.25) \\ &= 6802\ \text{scfm @ 70°F} \end{aligned}$$

Step 3. Determine the temperature correction factor for volume. This formula is similar to the temperature correction factor formula used in Chapter 11.

$$\begin{aligned} T_{\text{CF VOL}} &= \left(T_{\text{FCE TEMP}} + 460^\circ\text{F}\right)/\left(70^\circ\text{F} + 460^\circ\text{F}\right) \\ &= \left(275^\circ\text{F} + 460^\circ\text{F}\right)/\left(70^\circ\text{F} + 460^\circ\text{F}\right) \\ &= 1.38 \end{aligned}$$

Step 4. Determine exhaust flow at oven operating temperature to limit fuel input rate to 25% LFL at $T_{\text{FCE TEMP}}$. This formula follows an approach similar to that given in Chapter 11.

$$\begin{aligned} Q_{\text{EXH 275°F \& 25\% LFL}} &= Q_{\text{EXH 70°F \& 25\% LFL}}\left(T_{\text{CF VOL}}\right) \\ &= \left(6802\ \text{cfm @ 70°F}\right)(1.38) \\ &= 9387\ \text{cfm @ 275°F} \end{aligned}$$

Conclusion. The provided exhaust rate of 10,000 cfm exceeds the calculated rate of 9387 cfm @ 275°F required to keep the oven below 25 percent LFL at the operating temperature with all burners off and fuel gas flowing at the maximum input rate.

Sample Problem — SI Units

Objective. Calculate the airflow rate moving through the oven enclosure to maintain the oven atmosphere at or below 25 percent LFL.

Given the following information:

(1) Oven type: Continuous
(2) Fuel: Methane
(3) Number of burners: 5
(4) Maximum fuel input per burner: 28.32 m^3/hr @ 21°C
(5) Oven temperature: 135°C
(6) Exhaust airflow rate: 283.2 m^3/min

Step 1. Determine LFL at 135°C using the formula from above.

$$\begin{aligned} L_{275^\circ\text{F}} = L_{135^\circ\text{C}} &= L_{25^\circ\text{C}}\left[1 - 0.000721\left(T - 25^\circ\text{C}\right)\right] \\ &= 5.3\left[1 - 0.000721\left(135^\circ\text{C} - 25^\circ\text{C}\right)\right] \\ &= 4.9\% \text{ by volume} \end{aligned}$$

Step 2. Determine exhaust airflow at 21°C to control fuel input to 25% LFL. This formula follows an approach similar to that given in Chapter 11.

$$\begin{aligned} Q_{\text{EXH 21°C \& 25\% LFL}} &= \left(Q_{\text{FUEL INPUT}}\right) \bullet \left[(1.0)\ \%\ \text{exhaust vol.}\right] \\ &\quad / \left[\left(LFL_{\text{T FCE TEMP}}\right)(0.25)\%\ \text{fuel vol. at 25\% LFL}\right] \\ &= \left[\left(28.32\ \text{m}^3\text{/hr @ 21°C/burner}\right)(5\ \text{burners})(1\ \text{hr}/60\ \text{min})\right] \\ &\quad \bullet (1.0)/(0.049)(0.25) \\ &= 192.7\ \text{m}^3\text{/min @ 21°C} \end{aligned}$$

Step 3. Determine the temperature correction factor for volume. This formula is similar to temperature correction factor formula used in Chapter 11.

$$\begin{aligned} T_{\text{CF VOL}} &= \left(T_{\text{FCE TEMP}} + 273^\circ\text{C}\right)/\left(21^\circ\text{C} + 273^\circ\text{C}\right) \\ &= \left(135^\circ\text{C} + 273^\circ\text{C}\right)/\left(21^\circ\text{C} + 273^\circ\text{C}\right) \\ &= 1.38 \end{aligned}$$

Step 4. Determine exhaust flow at oven operating temperature to limit fuel input rate to 25% LFL at $T_{\text{FCE TEMP}}$. This formula follows an approach similar to that given in Chapter 11.

$$\begin{aligned} Q_{\text{EXH 275°F \& 25\% LFL}} &= Q_{\text{EXH 21°C \& 25\% LFL}}\left(T_{\text{CF VOL}}\right) \\ &= \left(192.7\ \text{m}^3\text{/min @ 21°C}\right)(1.38) \\ &= 265.9\ \text{m}^3\text{/min @ 135°C} \end{aligned}$$

Conclusion. The provided exhaust rate of 283.2 m^3/min exceeds the calculated rate of 265.9 m^3/min @ 135°C required to keep the oven below 25 percent LFL at the operating temperature with all burners off and fuel gas flowing at the maximum input rate.

A.8.5.1.8(4)(d) In accordance with 8.5.1.8(4)(c), fuels other than natural gas, butane, or propane might require additional consideration. These additional considerations would be addressed using Section 1.5. The concern with other fuel gases is the variability of fuel gas content being delivered over time. Specific examples include landfill gas and bio gas.

The following sample calculation illustrating the use of 8.5.1.8(4)(d) is provided to demonstrate a method of determining the 25 percent LFL requirement.

The sample calculation is based upon the following assumptions:

(1) The fuel is methane gas.
(2) All burners are turned off for control purposes. All safety shutoff valves are de-energized.
(3) At each burner, two safety shutoff valves are closed, or a single shutoff valve is proven closed.

Copyright 2014 National Fire Protection Association (NFPA). Licensed, by agreement, for individual use and download on October 4, 2014 to LEADER and READER for designated user PATTARAPORN SRITRAKOOL. No other reproduction or transmission in any form permitted without written permission of NFPA. For inquires or to report unauthorized use, contact licensing@nfpa.org.

(4) All safety shutoff valves are tested for seat leakage at least semiannually.
(5) Safety shutoff valve seat leakage is assumed to be 1 scfh (0.0283 m^3/hr @ 21°C).

The following thoughts are offered regarding the selection of the 1 scfh (0.0283 m^3/hr @ 21°C) safety shutoff valve seat leakage rate.

Limited data reviewed by the committee indicate that valve seat leakage rates over 1 scfh (0.0283 m^3/hr @ 21°C) are not anticipated unless the safety shutoff valve seats are exposed to extremely unusual conditions such as corrosives in the fuel gas or furnace heat allowed to back up the fuel line and burn the safety shutoff valve seat. The former condition is the basis for limiting the use of 8.5.1.8(4) to furnaces using natural gas, butane, or propane fuel gases. The latter condition occurred in a case where a fuel line was inappropriately opened by maintenance staff while the furnace was in operation. The furnace was promptly shut down, and the safety shutoff valves were replaced.

Under operating conditions expected by this standard, it is anticipated that debris from internal fuel gas line oxidation (rust), pipe thread shavings not removed before fuel line assembly, or similar exposures can subject one safety shutoff valve to seat damage that can lead to seat leakage of one safety shutoff valve; however, it is not expected that both safety shutoff valves would experience similar seat leakage. The selected safety shutoff valve seat leakage rate of 1 scfh (0.0283 m^3/hr @ 21°C) is considered conservative.

Overall, this sample calculation is based upon the following conservative conditions:

(1) Using a safety shutoff valve seat leakage rate of 1 scfh (0.0283 m^3/hr @ 21°C)
(2) Providing two safety shutoff valves for each fuel path
(3) Closing two valves or using proof of closure if closing one valve
(4) Assuming safety shutoff valve leakage at each burner fuel path
(5) Using a design limit of 25 percent of LFL
(6) Including the effects of elevated furnace temperature on the LFL
(7) Assuming no fuel exits the furnace

The effects of temperature on fuel gas LFL were obtained from Bureau of Mines Bulletin 680, "Investigation of Fire and Explosion Accidents in the Chemical, Mining, and Fuel-Related Industries — A Manual." Figure 34 in that bulletin, "Temperature effect on lower limits of flammability of 10 normal paraffins in air at atmospheric pressure," shows temperature (°C) versus combustibles (volume percent) and includes curves for methane, butane, and propane. It also includes a formula for computing LFL at elevated temperature. That formula, based on Bureau of Mines Bulletin 627, "Flammability Characteristics of Combustible Gases and Vapors," is as follows:

[A.8.5.1.8(4)(d)]

$$L_T = L_{25}\left[1 - 0.000721\left(T - 25^{\circ}\text{C}\right)\right]$$

where:
L_T = LFL at the desired elevated temperature, T (°C)
L_{25} = LFL at 25°C
T = Desired elevated temperature (°C)

Sample Problem — U. S. Customary Units

Objective. Calculate the amount of time that all burners can be turned off before the furnace atmosphere will reach 25 percent LFL.

Assumptions. Furnace contains no combustibles when the burners are turned off. Furnace is under positive pressure with no air infiltration.

Given the following information:
Furnace type: Batch
Furnace size: 8 ft wide × 6 ft deep × 8 ft tall
Number of burners: 5
Burner design rate: 0.8 MM Btu/hr
Burner design excess air: 10.0%
Burner design air capacity: 8800 scfh
Burner air minimum design flow: 100 scfh
Maximum leak rate each flow path*: 1 scfh
Number of burner flow paths**: 5
Furnace temperature: 900°F (482°C)
Oxygen in furnace atmosphere: 18%
Fuel: Methane

*The flow path is across one set of closed safety shutoff valves.

**The number of flow paths is the number of sets of safety shutoff valves that are closed that can leak into the furnace enclosure.

Step 1. Determine LFL at 900°F using the formula from above:

$$\begin{aligned} L_{900^{\circ}\text{F}} = L_{482^{\circ}\text{C}} &= L_{25^{\circ}\text{C}}\left[1 - 0.000721\left(T - 25^{\circ}\text{C}\right)\right] \\ &= 5.3\left[1 - 0.000721\left(482^{\circ}\text{C} - 25^{\circ}\text{C}\right)\right] \\ &= 3.6\% \text{ by volume} \end{aligned}$$

Step 2. Determine the furnace volume:

$$V_{\text{FCE}} = L \times W \times H = 8 \text{ ft} \times 6 \text{ ft} \times 8 \text{ ft} = 384 \text{ ft}^3$$

Step 3. Determine the methane leak rate into the furnace with all burners off:

$$\begin{aligned} Q_{\text{LEAK}} &= \#\text{ flow paths} \times \text{leak rate per path} \\ &= 5 \text{ paths} \times 1 \text{ scfh/path} \\ &= 5 \text{ scfh} \end{aligned}$$

Step 4. Determine the airflow into the furnace with all burners off:

$$\begin{aligned} Q_{\text{AIR}} &= \#\text{ burners} \times \text{airflow rate per idle burner} \\ &= 5 \text{ burners} \times 100 \text{ scfh/burner} \\ &= 500 \text{ scfh} \end{aligned}$$

Step 5. Determine the percent volume methane to air through all burners:

$$\begin{aligned} \%\text{ volume methane to air} &= \left(Q_{LEAK} / Q_{AIR}\right)(100\%) \\ &= \left(5 \text{ scfh}/500 \text{ scfh}\right)(100\%) \\ &= 1\% \end{aligned}$$

Step 6. Determine the percent LFL resulting from the methane flow through all burner fuel paths at 900°F:

$$\begin{aligned} \%LFL_{900^{\circ}\text{F}} &= \left(\%\text{ volume methane to air} / LFL_{900^{\circ}\text{F}}\right)(100\%) \\ &= \left(1\% / 3.5\%\right)(100\%) \\ &= 28.57\% \end{aligned}$$

Step 7. Determine the time in minutes to reach 25 percent LFL with all burners off:

$$\begin{aligned} t_{\text{FCE 25\% LFL}} &= \left[\left(L_{900^{\circ}\text{F}}\right)(0.25)\right] \;/\; \left[\left(Q_{\text{LEAK}} / V_{\text{FCE}}\right)\right](60 \text{ min/hr}) \\ &= \left[(0.036)(0.25) / \left(5 \text{ ft}^3/\text{hr}/384 \text{ ft}^3\right)\right](60 \text{ min/hr}) \\ &= 41.5 \text{ minutes} \end{aligned}$$

Conclusions. Where the value of percent $LFL_{900^{\circ}\text{F}}$ exceeds 25 percent, the burner safety shutoff valves can remain closed

Copyright 2014 National Fire Protection Association (NFPA). Licensed, by agreement, for individual use and download on October 4, 2014 to LEADER and READER for designated user PATTARAPORN SRITRAKOOL. No other reproduction or transmission in any form permitted without written permission of NFPA. For inquires or to report unauthorized use, contact licensing@nfpa.org.

and burners be reignited without a repurge within a period of time not exceeding $t_{\text{FCE 25\% LFL}}$. After $t_{\text{FCE 25\% LFL}}$ is exceeded, a repurge of the furnace is required.

Where the value of percent $LFL_{900°F}$ equals or is less than 25 percent, burners can be reignited at any time as long as the airflow rate Q_{AIR} is proven and interlocked in the burner management system such that loss of this proven airflow rate will require a repurge of the furnace before burner reignition is permitted.

Sample Problem — SI Units

Objective. Calculate the amount of time that all burners can be turned off before the furnace atmosphere will reach 25 percent LFL.

Assumptions. Furnace contains no combustibles when the burners are turned off. Furnace is under positive pressure with no air infiltration.

Given the following information:

Furnace type: Batch

Furnace size: 2.438 m wide × 1.828 m deep × 2.428 m tall

Number of burners: 5

Burner design rate: 234.2 kW

Burner design excess air: 10.0 percent

Burner design air capacity: 249.2 m^3/hr @ 21°C

Burner air minimum design flow: 2.83 m^3/hr @ 21°C

Maximum leak rate each flow path*: 0.0283 m^3/hr @ 21°C

Number of burner flow paths**: 5

Furnace temperature: 482°C (900°F)

Oxygen in furnace atmosphere: 18 percent

Fuel: Methane

*The flow path is across one set of closed safety shutoff valves.

**The number of flow paths is the number of sets of safety shutoff valves that are closed that can leak into the furnace enclosure.

Step 1. Determine LFL at 482°C using the formula from above:

$$\begin{aligned} L_{482°C} &= L_{25}\left[1 - 0.000721\left(T - 25°C\right)\right] \\ &= 5.3\left(1 - 0.000721\right)\left(482°C - 25°C\right) \\ &= 3.6 \text{ \% by volume} \end{aligned}$$

Step 2. Determine the furnace volume:

$$V_{FCE} = L \times W \times H = 2.438 \text{ m} \times 1.828 \text{ m} \times 2.428 \text{ m} = 10.87 \text{ m}^3$$

Step 3. Determine the methane leak rate into the furnace with all burners off:

$$\begin{aligned} Q_{LEAK} &= \#\text{ flow paths} \times \text{leak rate per path} \\ &= 5 \text{ paths} \times 0.0283 \text{ m}^3\text{/hr @ } 21°C\text{/path} \\ &= 0.142 \text{ m}^3\text{/hr @ } 21°C \end{aligned}$$

Step 4. Determine the airflow into the furnace with all burners off:

$$\begin{aligned} Q_{AIR} &= \#\text{ burners} \times \text{airflow rate per idle burner} \\ &= 5 \text{ burners} \times 2.83 \text{ m}^3\text{/hr @ } 21°C\text{/burner} \\ &= 14.2 \text{ m}^3\text{/hr @ } 21°C \end{aligned}$$

Step 5. Determine the percent volume methane to air through all burners:

$$\begin{aligned} &\%\text{ vol. methane to air} \\ &= \left(Q_{LEAK} / Q_{AIR}\right)(100\%) \\ &= \left(0.142 \text{ m}^3\text{/hr @ } 21°C / 14.2 \text{ m}^3\text{/hr @ } 21°C\right)100\% \\ &= 1\% \end{aligned}$$

Step 6. Determine the percent LFL resulting from the methane flow through all burner fuel paths at 482°C:

$$\begin{aligned} \%LFL_{482°C} &= \left(\%\text{ volume methane to air} / LFL_{482°C}\right)(100\%) \\ &= \left(1\% / 3.5\%\right)(100\%) \\ &= 28.57\% \end{aligned}$$

Step 7. Determine the time in minutes to reach 25 percent LFL with all burners off:

$$\begin{aligned} t_{\text{FCE 25\% LFL}} &= \left[\left(L_{482°C}\right)(0.25)\right] \;/\; \left[\left(Q_{LEAK} / V_{FCE}\right)\right](60 \text{ min/hr}) \\ &= \left[(0.036)(0.25) \;/\; \left(0.142 \text{ m}^3\text{/hr}\right)\left(10.87 \text{ m}^3\right)\right](60 \text{ min/hr}) \\ &= 41.3 \text{ minutes} \end{aligned}$$

Conclusions. Where the value of percent $LFL_{482°C}$ exceeds 25 percent, the burner safety shutoff valves can remain closed and burners be reignited without a repurge within a period of time not exceeding $t_{\text{FCE 25\% LFL}}$. After $t_{\text{FCE 25\% LFL}}$ is exceeded, a repurge of the furnace is required.

Where the value of percent $LFL_{482°C}$ equals or is less than 25 percent, burners can be reignited at any time as long as the airflow rate Q_{AIR} is proven and interlocked in the burner management system such that loss of this proven airflow rate will require a repurge of the furnace before burner reignition is permitted.

A.8.5.2 When the purge is complete, there should be a limit to the time between purge complete and trial for ignition. Delay can result in the need for a repurge.

A.8.6.1 Use of a rotational switch is an acceptable means of proving operation of a fan where the impeller is not located in a dedicated housing (nonducted). A Hall effect sensor is one example of a device that can be used to prove fan shaft rotation.

Regular inspection of the impeller may be required to ensure original performance is maintained (i.e., blades still attached, angles on blades correct, etc.).

A.8.7.4 In industrial combustion applications with modulating flow control valves downstream of the combustion air blower, it is most common to interlock the constant combustion air source pressure on single and multiburner systems to meet the requirements of 8.7.2 and 8.7.4.

Because the combustion airflow is proved during each purge cycle along with the combustion air source pressure, the most common convention is to prove the combustion air source pressure during burner operation following purge. In a multiburner system, the proof of combustion airflow during purge proves that any manual valves in the combustion air system are in an adequately open position. These manual air valves are provided for maintenance and combustion airflow balancing among burners in a temperature control zone. In combustion air supply systems that use either an inlet damper or a speed control, the combustion air pressure can fall below reliably repeatable levels with listed pressure switch interlocks at low fire. For these systems, the proof of minimum airflow can be a more reliable interlock.

A pressure switch on the inlet (suction) side of an induced draft (ID) fan can be used to prove that the minimum required suction pressure is available.

Copyright 2014 National Fire Protection Association (NFPA). Licensed, by agreement, for individual use and download on October 4, 2014 to LEADER and READER for designated user PATTARAPORN SRITRAKOOL. No other reproduction or transmission in any form permitted without written permission of NFPA. For inquires or to report unauthorized use, contact licensing@nfpa.org.

For combustion systems that use high pressure gas/air to induce (inspirate) air locally at each burner, it is impractical to monitor and prove the availability of combustion air.

For combustion systems that use natural (stack) draft to induce air into the burners or combustion chamber, it is impractical to monitor and prove the availability of combustion air.

A.8.7.5 The maximum safe operating pressure can be exceeded where compressed air is utilized.

A.8.8.1.2 See Figure A.8.8.1.2.

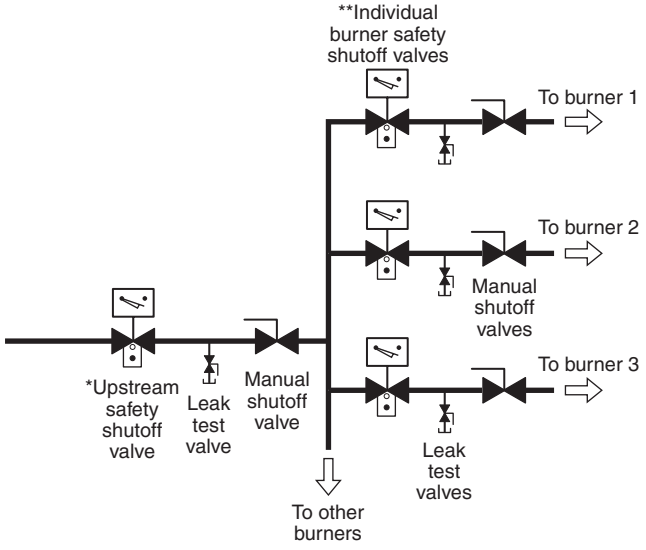

*Interlocked with preignition prepurge to comply with 8.8.2.2
**Interlocked with upstream safety shutoff valve to comply with 8.8.1.3

FIGURE A.8.8.1.2 Multiple Burner System Using Proof-of-Closure Switches.

A.8.8.1.3 Paragraph 8.8.1.3 addresses conditions under which only one safety shutoff valve is to close to isolate a burner from its fuel gas supply. Figure A.8.8.1.3 provides a summary of 8.8.1.3 in the form of a decision tree. See 8.5.1.7 and 8.5.1.8 for guidance regarding conditions that are needed to allow that burner to be placed back in service. The requirements of 8.5.1.8 might not allow a burner shut off by closing a single safety shutoff valve to be placed back in service without repeating a pre-ignition purge.

The requirements of 8.8.1.3 do not preclude opening of the safety shutoff valve located upstream of the individual burners using single safety shutoff valves during the trial for ignition for the first burner being lighted.

A.8.8.1.3(2) See A.8.5.1.8(3) for a sample calculation to demonstrate a method of determining the 25 percent LFL requirement.

A.8.8.1.10 Backpressure can lift a valve from its seat, permitting furnace gases to enter the fuel system. Examples of situations that create backpressure conditions are leak testing, furnace backpressure, combustion air pressure during prepurge, and fluidized bed furnaces.

A.8.8.2.2 An additional safety shutoff valve located to be common to the furnace system and proved closed and interlocked with the pre-ignition purge circuit can be used to meet the requirements of 8.8.2.2.

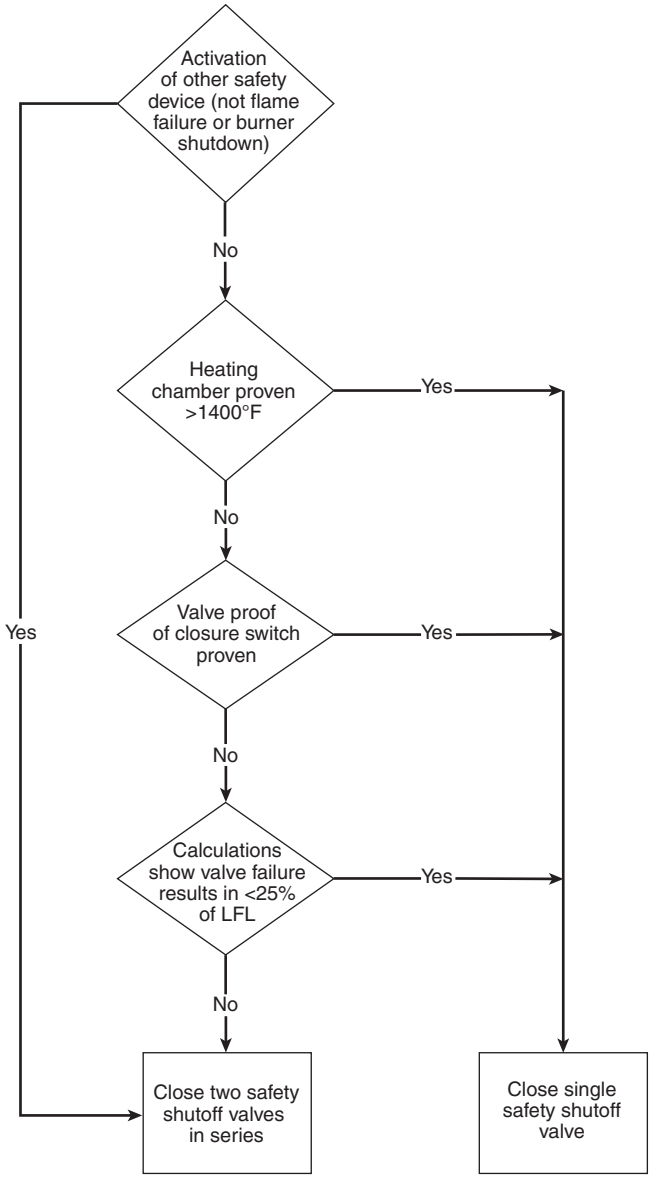

FIGURE A.8.8.1.3 Safety Shutoff Decision Tree.

A.8.8.3.2 An additional safety shutoff valve located to be common to the furnace system and proved closed and interlocked with the pre-ignition purge circuit can be used to meet the requirements of 8.8.3.2.

A.8.9 A system designer can choose not to use pressure switches in a pilot. However, gas pressure switches on a pilot can be desirable, and the following conditions should be considered in deciding whether or not switches should be used:

(1) *If it is a continuous pilot.* If a reliable pilot after light off is still a desirable part of the safety during operation of the burner, the switches help prove the reliability of the pilot so that the gas pressure to the pilot is proven to be within designed parameters.
(2) *If the pilot burner capacity is above 400,000 Btu/hr.* Direct sparking a burner in excess of 400,000 Btu/hr could introduce added risks if a delayed ignition occurs due to too much or too little gas pressure.

Copyright 2014 National Fire Protection Association (NFPA). Licensed, by agreement, for individual use and download on October 4, 2014 to LEADER and READER for designated user PATTARAPORN SRITRAKOOL. No other reproduction or transmission in any form permitted without written permission of NFPA. For inquires or to report unauthorized use, contact licensing@nfpa.org.

(3) *If the pilot burner uses its own pressure regulator.* Failure of that regulator could cause instability of the burner or expose downstream components to pressures exceeding their ratings.
(4) *If the inlet pressure to the pilot regulator exceeds ½ psi.* The higher the pressure to the pilot burner, the greater the risk of a problem due to incorrect gas pressure. The failure or overloading of a pilot regulator can be at a significantly higher risk where inlet pressures to the pilot regulator exceed ½ psi.
(5) Where providing overpressure protection for a pilot line in order to comply with 6.2.7, a high gas pressure switch on the pilot line in combination with a shutoff valve can be used.

A.8.10.1 Subsections 8.2.2 and 8.2.5 require that the flame detector and the combustion safeguard be applied and installed according to the manufacturer's instructions. Where flame detectors (scanners) with combustion safeguards continuously operate without a shutdown beyond the maximum interval recommended by the combustion safeguard and flame detector manufacturer's instructions, such continuous operation without a shutdown and safe-start check would not be compliant.

Ultraviolet sensors can fail in such a manner that the loss of flame is not detected. Where these sensors are placed in continuous service, failures can be detected by a self-checking ultraviolet detector or by periodic testing of the detector for proper operation.

A.8.10.3 Figure A.8.10.3 (not to scale) is a diagram showing sequences that need to occur to achieve a safety shutoff valve (SSOV) closing time of not more than 5 seconds following loss of flame. Typical SSOVs have a maximum closing time of 1 second; however, some listed or approved valves can have longer times.

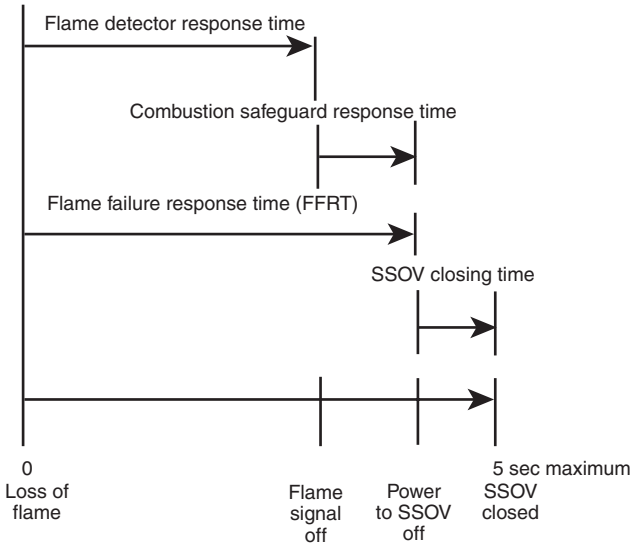

FIGURE A.8.10.3 Response Times on Loss of Flame.

A.8.10.5(3) The term *self-piloted burner* is defined in 3.3.5.14.

A.8.10.6 Two examples of burner arrangements considered to be a single burner with one flame safeguard installed at the end of the assembly are shown in Figure A.8.10.6(a) and Figure A.8.10.6(b).

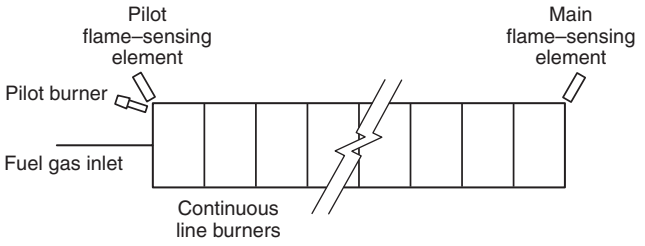

FIGURE A.8.10.6(a) Example of a Combustion Safeguard Supervising a Pilot for a Continuous Line Burner During Light-Off and the Main Flame Alone During Firing.

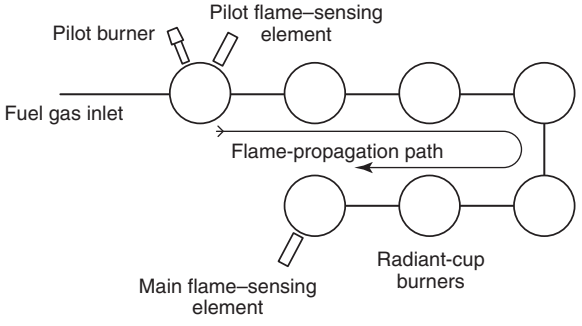

FIGURE A.8.10.6(b) Example of a Combustion Safeguard Supervising a Group of Radiant Cup Burners Having Reliable Flame-Propagation Characteristics from One to the Other by Means of Flame-Propagation Devices.

A.8.12 Wherever the temperature of fuel oil can drop below a safe level, the increased viscosity prevents proper atomization. No. 2 and No. 4 fuel oils can congeal if their temperature falls below their pour point, whether or not preheaters are used.

Wherever the temperature of the fuel oil rises above a safe level, vaporization of the oil takes place before atomization and causes a reduction in fuel volume severe enough to create substantial quenching of the flame.

A.8.13.1 The fact that oil or gas is considered a standby fuel should not reduce the safety requirements for that fuel.

A.8.16 The excess temperature set point should be set no higher than the maximum temperature specified by the manufacturer. If flammable or combustible materials are being processed in an oven or a dryer, the set point should be a temperature that will not allow the material to reach its auto-ignition temperature. Set point limits based on auto-ignition temperature do not apply to special-atmosphere furnaces and fume incinerators. If, for process reasons, the work must be protected from reaching an elevated temperature that is lower than the oven excess temperature set point, an additional temperature limit interlock can be used, or the operating temperature controller can be interlocked or alarmed as needed for this purpose.

For a constant speed exhaust fan, as the oven temperature increases, the oven exhaust flow in standard cubic feet per minute decreases. A high temperature excursion reduces safety ventilation and could cause a flammable vapor explosion in ovens and dryers provided with safety ventilation.

A.8.16.6 To detect other sensor failures, such as thermocouple short circuits, that will not result in the action required by 8.16.5,

Copyright 2014 National Fire Protection Association (NFPA). Licensed, by agreement, for individual use and download on October 4, 2014 to LEADER and READER for designated user PATTARAPORN SRITRAKOOL. No other reproduction or transmission in any form permitted without written permission of NFPA. For inquires or to report unauthorized use, contact licensing@nfpa.org.

the operator or maintenance personnel could evaluate the excess temperature limit interlock's temperature indication.

A.8.16.7 Temperature-sensing components, such as thermocouple and extension wires, that are not rated for the environment are at greater risk of short circuits.

A.8.16.8 The sensing element should be positioned where the difference between the temperature control sensor and the excess temperature limit sensor is minimized. The temperature-sensing element of the excess temperature limit interlock should be located where it will sense the excess temperature condition that will cause the first damage to the furnace or work as temperatures within the furnace rise above the maximum operating set point most critical to safe operation.

A.8.16.9 The temperature-sensing element of the excess temperature limit interlock can be monitored by other instrumentation, provided that the accuracy of the excess temperature limit interlock temperature reading is not diminished.

A.8.17.3 Visual indication permits detection of sensor failures, such as thermocouple short circuits, that will not result in the action required by 8.17.2. Operator or maintenance personnel can evaluate the 1400°F (760°C) bypass interlock by observing the temperature indication. It is also acceptable to bring the 1400°F (760°C) bypass interlock thermocouple output into a PLC or another instrument in parallel with the 1400°F (760°C) bypass interlock, providing the accuracy of the 1400°F (760°C) bypass interlock is not diminished. The PLC or other instrument can be used to monitor, trend, and alarm the 1400°F (760°C) bypass interlock thermocouple output by comparing its output with that of an independent temperature measurement, such as from the operating temperature interlock.

A.8.17.4 Temperature-sensing components, such as thermocouple and extension wires, that are not rated for the environment are at greater risk of short circuits.

A.8.17.8 An auxiliary contact in the excess temperature limit interlock device can be used as a 1400°F (760°C) bypass interlock providing the requirements of 8.17.2 are satisfied.

A.8.18.1.1 Abnormal conditions that could occur and require automatic or manual de-energization of affected circuits are as follows:

(1) System fault (short circuit) not cleared by normally provided branch-circuit protection *(see NFPA 70, National Electrical Code)*
(2) Excess temperature in a portion of the furnace that has not been abated by normal temperature-controlling devices
(3) Failure of any normal operating controls where such failure can contribute to unsafe conditions
(4) Loss of electric power that can contribute to unsafe conditions

A.8.18.1.5 The requirements of 8.18.1.5 could require the derating of some components as listed by the manufacturers for uses such as for other types of industrial service, motor control, and as shown in Table A.8.18.1.5.

A.8.18.2 The excess temperature set point should be set no higher than the maximum temperature specified by the manufacturer. If flammable or combustible materials are being processed in an oven or a dryer, the set point should be a temperature that will not allow the material to reach its auto-ignition temperature. Set point limits based on auto-ignition temperature do not apply to special-atmosphere furnaces and fume incinerators. If, for process reasons, the work must be protected from reaching an elevated temperature that is lower than the oven excess temperature set point, an additional temperature limit interlock can be used, or the operating temperature controller can be interlocked or alarmed as needed for this purpose.

For a constant speed exhaust fan, as the oven temperature increases, the oven exhaust flow in standard cubic feet per minute decreases. A high temperature excursion reduces safety ventilation and could cause a flammable vapor explosion in ovens and dryers provided with safety ventilation.

A.8.18.2.5 To detect other sensor failures, such as thermocouple short circuits, that will not result in the action required by 8.18.2.4, the operator or maintenance personnel could evaluate the excess temperature limit interlock's temperature indication.

A.8.18.2.6 Temperature-sensing components, such as thermocouple and extension wires, that are not rated for the environment are at greater risk of short circuits.

Table A.8.18.1.5 Heater Ratings

	Resistance-Type Heating Devices		Infrared Lamp and Quartz Tube Heaters	
Control Device	**Rating (% actual load)**	**Permissible Current (% rating)**	**Rating (% actual load)**	**Permissible Current (% rating)**
Fusible safety switch (% rating of fuse employed)	125	80	133	75
Individually enclosed circuit breaker	125	80	125	80
Circuit breakers in enclosed panelboards	133	75	133	75
Magnetic contactors				
0–30 amperes	111	90	200	50
30–100 amperes	111	90	167	60
150–600 amperes	111	90	125	80

Note: Table applies to maximum load or open ratings for safety switches, circuit breakers, and industrial controls approved under current National Electrical Manufacturers Association (NEMA) standards.

Copyright 2014 National Fire Protection Association (NFPA). Licensed, by agreement, for individual use and download on October 4, 2014 to LEADER and READER for designated user PATTARAPORN SRITRAKOOL. No other reproduction or transmission in any form permitted without written permission of NFPA. For inquires or to report unauthorized use, contact licensing@nfpa.org.

A.8.18.2.7 The sensing element should be positioned where the difference between the temperature control sensor and the excess temperature limit sensor is minimized. The temperature-sensing element of the excess temperature limit interlock should be located where it will sense the excess temperature condition that will cause the first damage to the furnace or work as temperatures within the furnace rise above the maximum operating set point most critical to safe operation.

A.8.18.2.8 The temperature-sensing element of the excess temperature limit interlock can be monitored by other instrumentation, provided that the accuracy of the excess temperature limit interlock temperature reading is not diminished.

A.8.19 The excess temperature set point should be set no higher than the maximum temperature specified by the manufacturer. If flammable or combustible materials are being processed in an oven or a dryer, the set point should be a temperature that will not allow the material to reach its auto-ignition temperature. Set point limits based on auto-ignition temperature do not apply to special-atmosphere furnaces and fume incinerators. If, for process reasons, the work must be protected from reaching an elevated temperature that is lower than the oven excess temperature set point, an additional temperature limit interlock can be used, or the operating temperature controller can be interlocked or alarmed as needed for this purpose.

For a constant speed exhaust fan, as the oven temperature increases, the oven exhaust flow in standard cubic feet per minute decreases. A high temperature excursion reduces safety ventilation and could cause a flammable vapor explosion in ovens and dryers provided with safety ventilation.

A.8.19.2 Interrupting the flow of heat transfer fluid to an oven can be accomplished by shutting down the central fluid heating system or by shutting a heat transfer fluid safety shutoff valve on both the oven supply and the return lines. If heat transfer fluid safety shutoff valves are used, the central fluid heating system might need an automatic emergency loop to provide a dummy cooling load and to maintain fluid flow through the heater.

A.8.19.6 To detect other sensor failures, such as thermocouple short circuits, that will not result in the action required by 8.19.5, the operator or maintenance personnel can evaluate the excess temperature limit interlock's temperature indication.

A.8.19.7 Temperature-sensing components, such as thermocouple and extension wires, that are not rated for the environment are at greater risk of short circuits.

A.8.19.8 The sensing element should be positioned where the difference between the temperature control sensor and the excess temperature limit sensor is minimized. The temperature-sensing element of the excess temperature limit interlock should be located where it will sense the excess temperature condition that will cause the first damage to the furnace or work as temperatures within the furnace rise above the maximum operating set point most critical to safe operation.

A.8.19.9 The temperature-sensing element of the excess temperature limit interlock may be monitored by other instrumentation, providing that accuracy of the excess temperature limit interlock temperature reading is not diminished.

A.9.1 This standard addresses the protection needs of ovens, furnaces, and related equipment. Fire protection needs external to this equipment are beyond the scope of this standard.

Fixed fire protection for the equipment can consist of sprinklers, water spray, carbon dioxide, foam, dry chemical, water mist, or steam extinguishing systems. The extent of protection required depends upon the construction and arrangement of the oven, furnace, or related equipment as well as the materials being processed. Fixed protection should extend as far as necessary in the enclosure and ductwork if combustible material is processed or combustible buildup is likely to occur. If the fixtures or racks are combustible or are subject to loading with excess combustible finishing materials, or if an appreciable amount of combustible drippings from finishing materials accumulates in the oven or ductwork, protection should also be provided.

Steam inerting systems can be used to protect ovens where steam flooding is the only means available. Otherwise, the use of steam in ovens is not recommended.

Hydrogen and other flammable gas fires are not normally extinguished until the supply of gas has been shut off because of the danger of re-ignition or explosion. Personnel should be cautioned that hydrogen flames are invisible and do not radiate heat. In the event of fire, large quantities of water should be sprayed on adjacent equipment to cool the equipment and prevent its involvement in the fire. Combination fog and solid stream nozzles should be used to allow the widest adaptability in fire control.

Small flammable gas fires can be extinguished by dry chemical extinguishers or with carbon dioxide, nitrogen, or steam. Re-ignition can occur if a metal surface adjacent to the flame is not cooled with water or by other means.

Dip tanks and drain boards included in oven enclosures should be protected by an automatic fire suppression system if flammable or combustible liquids are involved. NFPA 34, *Standard for Dipping, Coating, and Printing Processes Using Flammable or Combustible Liquids*, provides guidance for the design of fire suppression systems for dip tanks and drain boards.

A.9.1.3 Where fire protection is determined to be necessary, a documented study should be conducted to determine the correct response to a fire to achieve a safe shutdown of the oven and an effective response of the fire protection system. Automatic interlocks should be provided where actions do not require operator evaluation. Specific actions will depend on the oven design, type of fire protection system, the characteristics of the combustible material(s), the source(s) of combustibles, the ability to isolate combustible sources, and the effects of fresh air. Items to be considered should include, but not be limited to, the following:

(1) The means for detecting a fire
(2) Type(s) of fire protection system(s) effective at controlling the fire
(3) Manual vs. automatic operation of the fire protection system
(4) Shutting down the fuel supply (heating system) where such action does not increase the fire hazard
(5) Stopping the conveyor system vs. diverting or stopping entering product and running the conveyor at high speed to empty oven
(6) Shutting down fans and closing dampers to block fresh air entry and contain the fire suppression medium vs. maintaining fans in operations and dampers open to ensure an explosive atmosphere does not develop

A.9.2 Where steam extinguishing systems are provided, they should be designed in accordance with fire protection engineering principles.

Copyright 2014 National Fire Protection Association (NFPA). Licensed, by agreement, for individual use and download on October 4, 2014 to LEADER and READER for designated user PATTARAPORN SRITRAKOOL. No other reproduction or transmission in any form permitted without written permission of NFPA. For inquires or to report unauthorized use, contact licensing@nfpa.org.

A.9.2.1 Automatic sprinkler protection should be considered for ovens, furnaces, or related equipment if any of the following conditions exists:

(1) The material being processed is combustible.
(2) Racks, trays, spacers, or containers are combustible.
(3) There are areas where appreciable accumulations of combustible drippings or deposits are present on the inside of the oven surface or on racks, trays, and so forth.

The type of sprinklers and their arrangement should be appropriate to the oven arrangement, interior ductwork, and the material passing through the oven.

A.9.2.3 Where a water spray system is protecting a quench tank, the fixed-temperature actuation devices for the water spray system should be rated at least one temperature rating lower than the temperature rating of the building sprinklers over the quench tanks.

A.9.2.4 Where a carbon dioxide system is protecting a quench tank, the fixed-temperature actuation devices for the carbon dioxide system should be rated at least one temperature rating lower than the temperature rating of the building sprinklers over the quench tanks.

A.9.2.6 Where a dry chemical system is protecting a quench tank, the fixed-temperature actuation devices for the dry chemical system should be rated at least one temperature rating lower than the temperature rating of the building sprinklers over the quench tanks.

A.9.3.2 At elevated temperatures, galvanizing can flake off pipe surfaces, and the flakes can collect at and obstruct the discharge of the fire suppression system.

A.10.2.1 Afterburner or fume incinerator systems might or might not employ catalysts or various heat exchange devices to reduce fuel usage.

Structural supports, thermal expansion joints, protective insulation for incinerator housings, stacks, related ductwork, and heat recovery systems utilizing incinerator exhaust gases should be designed for operating temperatures of 450°F to 2000°F (232°C to 1093°C).

A.10.2.3 A regenerative thermal oxidizer design can maximize efficiency by maintaining a minimum volatile concentration in the airstream. To achieve this efficiency even when the VOC source concentration varies, some designs inject a flammable vapor into the airstream immediately upstream of the oxidizer. The rate of injection may be controlled by temperature feedback or similar method. Care is needed to ensure that the following conditions are met:

(1) The concentration of volatiles cannot exceed 25 percent LFL (50 percent LFL with flammable vapor concentration controller).
(2) The gas injection piping is isolated during purge (proved closed).
(3) The gas injection is interlocked with the burner management system (flame failure).

When operating temperatures are below 1400°F (760°C), a 1400°F (760°C) bypass interlock cannot be implemented in accordance with Section 8.17.

A.10.6.1 Requirements for thermal ozidizers are located in Chapter 10.

A.10.6.2 Fume incinerators should operate at the temperature necessary for the oxidation process and in accordance with local, state, and federal regulations. Fume incinerators or afterburners should control atmospheric hydrocarbon emissions by direct thermal oxidation, generally in the range of 1200°F to 2000°F (650°C to 1093°C). Figure A.10.6.2 shows a solvent fume incinerator with heat recovery.

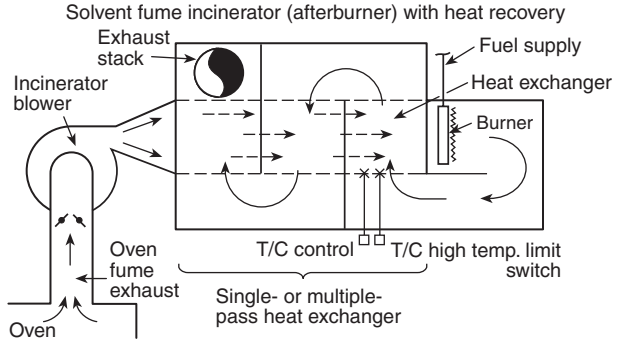

FIGURE A.10.6.2 Example of a Direct Thermal Oxidation Incinerator (Afterburner) with Primary Heat Recovery.

A.10.6.2.1 An individual fume source or multiple sources that feed into one fume incinerator might cause additional hazards if fed into an operating incinerator during the purge cycle of the source. *(See 8.5.1.3.)*

A.10.6.2.2 Operating controls should be configured to minimize the likelihood of an excess temperature condition being caused by one or more of the following:

(1) Reduction or termination of fuel to the fume incinerator burner
(2) Interruption of the fume-generating process
(3) Dilution of hydrocarbon concentration with fresh air
(4) Partial emission stream bypass of the heat exchanger

A.10.6.3.3 When exhaust is recycled, it can reduce the oxygen content supplied to the incinerator (reducing destruction efficiency). This in turn will result in increased levels of flammable vapors being exhausted into the oven for heat recovery purposes. The system design should have inherent physical characteristics to ensure that the ratio of heat recovery gases is limited to prevent unsafe conditions or use a combination of telemetry controls and interlocks to prevent this from occurring.

A.10.6.4 Catalytic fume incinerators should operate at the temperature necessary for the catalytic oxidation process in accordance with local, state, and federal regulations.

Catalytic fume incinerators control atmospheric hydrocarbon emissions by thermal oxidation, using a catalyst element. Oxidation occurs at or near the auto-ignition temperature of the contaminants, which ranges from 450°F to 950°F (232°C to 510°C).

Catalyst elements utilize various types and forms of substrates such as the following:

(1) Metal shavings
(2) Small, irregular metal castings
(3) Formed or stamped light-gauge sheet metal
(4) Ceramic- or porcelain-formed structures, pellets, or granules

Copyright 2014 National Fire Protection Association (NFPA). Licensed, by agreement, for individual use and download on October 4, 2014 to LEADER and READER for designated user PATTARAPORN SRITRAKOOL. No other reproduction or transmission in any form permitted without written permission of NFPA. For inquires or to report unauthorized use, contact licensing@nfpa.org.

Most substrates are restricted to fixed bed applications, although pellets and granules have application in fluidized beds as well. Various catalyst materials are available and include rare earth elements, precious metals such as platinum and palladium, and a few metallic salts. For commercial use, the catalyst material is bonded to or mixed in with (in the case of ceramic or porcelain structures, pellets, or granules) the substrates specified in the preceding list.

For atmospheric pollution control, catalyst materials frequently are installed in oven exhaust streams, and the increased energy level resulting from hydrocarbon oxidation is either discharged to the outside atmosphere or recycled to the process oven, directly or by means of a heat exchange system.

The application of catalysts should recognize the inherent limitations associated with these materials, such as the inability to oxidize silicone, sulfur, and halogenated compounds (certain catalysts employing base metals — e.g., manganese and copper — are resistant to halogens and sulfur poisons), as well as metallic vapors such as tin, lead, and zinc. These materials can destroy catalyst activity, whereas various inorganic particulates (dust) can mask the catalyst elements and retard activity, thus making specific maintenance procedures necessary. Consultation with qualified suppliers and equipment manufacturers is recommended prior to installation.

Where applicable, catalyst afterburner exhaust gases can be permitted to be utilized as a heat source for the process oven generating the vapors or some other unrelated process. Heat recovery can be indirect, by the use of heat exchange devices, or direct, by the introduction of the exhaust gases into the process oven.

Alternatively, catalytic heaters can be permitted to be installed in the oven exhaust stream to release heat from evaporated oven by-products, with available energy being returned by means of heat exchange and recirculation to the oven processing zone. *[See Figure A.10.6.4(a) and Figure A.10.6.4(b).]*

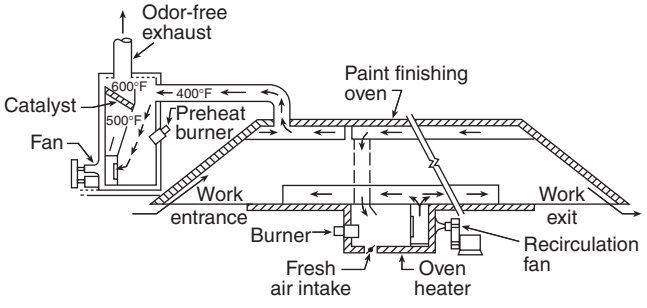

FIGURE A.10.6.4(a) Example of Catalyst System Independent of Oven Heater for Air Pollution Control.

A.10.6.4.2 The temperature differential (T) across the catalyst should be monitored to ensure that catalytic oxidation is occurring. Separate temperature-indicating instruments or controllers can be used to determine T arithmetically. Control of fuel or electrical energy for preheating the fume stream entering the catalyst can utilize temperature-measuring instruments at the catalyst inlet or discharge or at a juncture between instruments in each location. Maximum permitted afterburner temperature should be monitored only at the catalyst bed exit. The value of T across the catalyst bed indicates the energy release and should be limited to values nondestructive to the catalyst material.

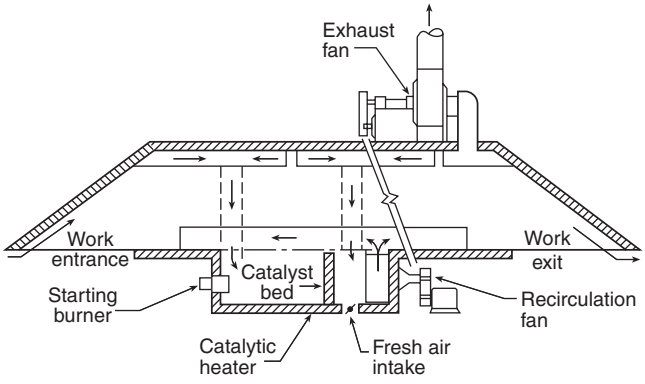

FIGURE A.10.6.4(b) Example of Indirect-Type Catalytic Oven Heater for Full Air Pollution Control.

Regenerative catalyst oxidizers that employ flow reversal through the system do not produce a measurable T across the catalyst bed indicative of the energy released from the oxidation of the combustibles. In regenerative catalytic oxidation systems, the flow is reversed frequently through the system to maximize utilization of process heat. One characteristic is that the measured temperature at any one point in the system's packed beds, whether in the heat matrix (ceramic packing) or in the catalyst bed is never constant; rather, it is a sinusoidal function of time. Measuring before and after the catalyst bed does not show energy released from volatile organic compound (VOC) oxidation. The fact that the catalyst bed is employed for VOC oxidation and heat recovery means that those temperatures measured are dependent on flow rate, duration between flow reversals, concentration of VOC, VOC species, activity of catalyst, and burner input.

A.10.6.4.3 Concentrations at 25 percent LFL can produce a temperature rise near 600°F (316°C) that, where added to the required inlet temperature, results in temperatures generally considered to be within a range where thermal degradation occurs.

In the event of a high-temperature shutdown of the system, the catalyst bed will need to be cooled to prevent further damage to the catalyst through thermal or high-temperature breakdown. Most catalysts employ a high surface area substrate, such as alumina, that allows for the maximum amount of catalyst material exposed to the fumes per unit of catalyst (pellet, granule, or structured packing). The surface area of the catalyst can be diminished through failure of the pore structure of the substrate at elevated temperatures [typically greater than 1200°F (649°C)], which results in less exposed catalyst material per unit of catalyst and a lower activity. This rate of thermal poisoning is a function of temperature and duration, and the net effect can be minimized by quickly cooling the catalyst to safe operating temperatures, from 450°F to 950°F (232°C to 510°C).

A.10.6.4.4 Oxidation performance of catalyst material is a function of temperature, velocity, and pressure drop (P) through the bed, with bed size and configuration directly related to these factors. Pressure drop across the bed fluctuates with temperatures and particulate contamination. Contamination can lead to reduced safety ventilation in the upstream process.

A.10.6.4.5 Although the definition of a catalyst is a substance that participates in a chemical reaction without being changed by it, the reality is that catalysts are affected by chemi-

Copyright 2014 National Fire Protection Association (NFPA). Licensed, by agreement, for individual use and download on October 4, 2014 to LEADER and READER for designated user PATTARAPORN SRITRAKOOL. No other reproduction or transmission in any form permitted without written permission of NFPA. For inquires or to report unauthorized use, contact licensing@nfpa.org.

cal reactions and over time will lose their ability to promote the desired chemical reaction. To ensure that a catalytic fume incinerator is performing as intended, it is necessary to periodically check the activity of the catalyst. The usual method is to send a sample of the catalyst to the supplier for testing. The need for obtaining samples should be addressed in the design of the catalyst bed.

The consequence of declining catalyst activity is the incomplete destruction of the organic vapor. Among the products of a partial combustion reaction are hydrogen, carbon monoxide, and aldehydes, all of which are flammable. The impact of significant quantities of these flammable gases on the operation of a direct heat recovery system should be assessed by the equipment supplier. Other potential concerns include the odor and skin irritation that can be caused by the aldehydes.

A.11.4.1 Figure A.11.4.1(a) and Figure A.11.4.1(b) are two examples of manufacturers' nameplates furnishing design data.

WARNING: Do Not Deviate from These Nameplate Conditions

SOLVENTS USED _____
For example, alcohol, naphtha, benzene, turpentine

SOLVENTS AND VOLATILES ENTERING OVEN _____
Gallons (liters) per hour or batch

PURGING INTERVAL _____
Minutes

OVEN TEMPERATURE, °F (°C) _____

EXHAUST BLOWER RATED FOR _____ GALLONS (LITERS) OF SOLVENT PER HOUR OR BATCH AT MAXIMUM OPERATING TEMPERATURE OF _____°F (°C)

MANUFACTURER'S SERIAL NUMBER _____

MANUFACTURER'S NAME AND ADDRESS

_____

_____

_____

FIGURE A.11.4.1(a) Recommended Manufacturer's Nameplate Data.

A.11.4.4 See Section 7.6 regarding oven entry procedure and asphyxiation warnings.

A.11.6.1.4 Chemical properties can be obtained from the manufacturer's literature, published literature, or the tables in A.11.6.8.4.

A.11.6.1.7 The use of propeller-type fans or blowers with forward-curved blades for applications that involve vapors that are not clean should be reviewed because of their susceptibility to accumulation of deposits and possible loss of safety ventilation.

A.11.6.1.10 In the past, NFPA 86 prohibited ovens using a single fan for both recirculation and exhaust. These dual-purpose fan installations have a long history of fire and explosion incidents. The primary cause of these incidents was short-circuiting of safety ventilation resulting in pockets or zones in which flammable vapors can concentrate.

SAFETY DESIGN FORM FOR SOLVENT ATMOSPHERE OVENS

THIS OVEN IS DESIGNED FOR THE CONDITIONS AS INDICATED BELOW AND IS APPROVED FOR SUCH USE ONLY

WARNING — Do Not Deviate from These Conditions

SOLVENTS USED _____
For example, alcohol, naphtha, benzene, turpentine

SOLVENTS AND VOLATILES ENTERING OVEN _____
Gallons (liters) per hour or batch

PURGING INTERVAL _____
Minutes

OVEN TEMPERATURE, °F (°C) _____

EXHAUST BLOWER RATED FOR _____ GALLONS (LITERS) OF SOLVENT PER HOUR OR BATCH AT MAXIMUM OPERATING TEMPERATURE OF _____°F (°C)

MANUFACTURER'S SERIAL NUMBER _____

MANUFACTURER'S NAME AND ADDRESS

_____

_____

_____

Above information is for checking safe performance and is not a guarantee of this equipment in any form, implied or otherwise, between buyer and seller relative to its performance.

FIGURE A.11.4.1(b) Recommended Safety Design Data Form.

The current text for 11.6.1.10 now permits alternative means to dedicated exhaust fans for proving safety ventilation. Accordingly, the user, oven designer, and the AHJ are cautioned to carefully examine air flow of both incoming and exhaust with respect to operating pressures, circulating methodology, and proof of the air flow design.

Figure A.11.6.1.10 illustrates an example that is unacceptable because short-circuiting is possible as well as an example that is potentially acceptable. The key in most cases is locating the fresh air intake(s) in relation to the exhaust appropriately to ensure that fresh air passes throughout the volume.

These drawings best pertain to batch ovens, as the openings in a continuous oven alter pressure differentials creating additional flow paths which must be taken into consideration.

A.11.6.1.16 The vapors of most volatile solvents and thinners commonly used in finishing materials are heavier than air; consequently, bottom ventilation is of prime importance *(see the tables in A.11.6.8.4)*. Liquefied petroleum gases are heavier than air, and other fuel gases are lighter than air. See NFPA 325, *Fire-Hazard Properties of Flammable Liquids, Gases and Volatile Solids*. (Note: Although NFPA 325 has been officially withdrawn from the *National Fire Codes*, the information is still available in NFPA's *Fire Protection Guide to Hazardous Materials*.)

In areas outside the oven where volatiles are given off by material prior to entering the oven, adequate provisions should be made to exhaust vapors to the atmosphere in accordance with applicable local, state, and federal regulations.

A.11.6.2.1 See A.8.6.1.

Copyright 2014 National Fire Protection Association (NFPA). Licensed, by agreement, for individual use and download on October 4, 2014 to LEADER and READER for designated user PATTARAPORN SRITRAKOOL. No other reproduction or transmission in any form permitted without written permission of NFPA. For inquires or to report unauthorized use, contact licensing@nfpa.org.

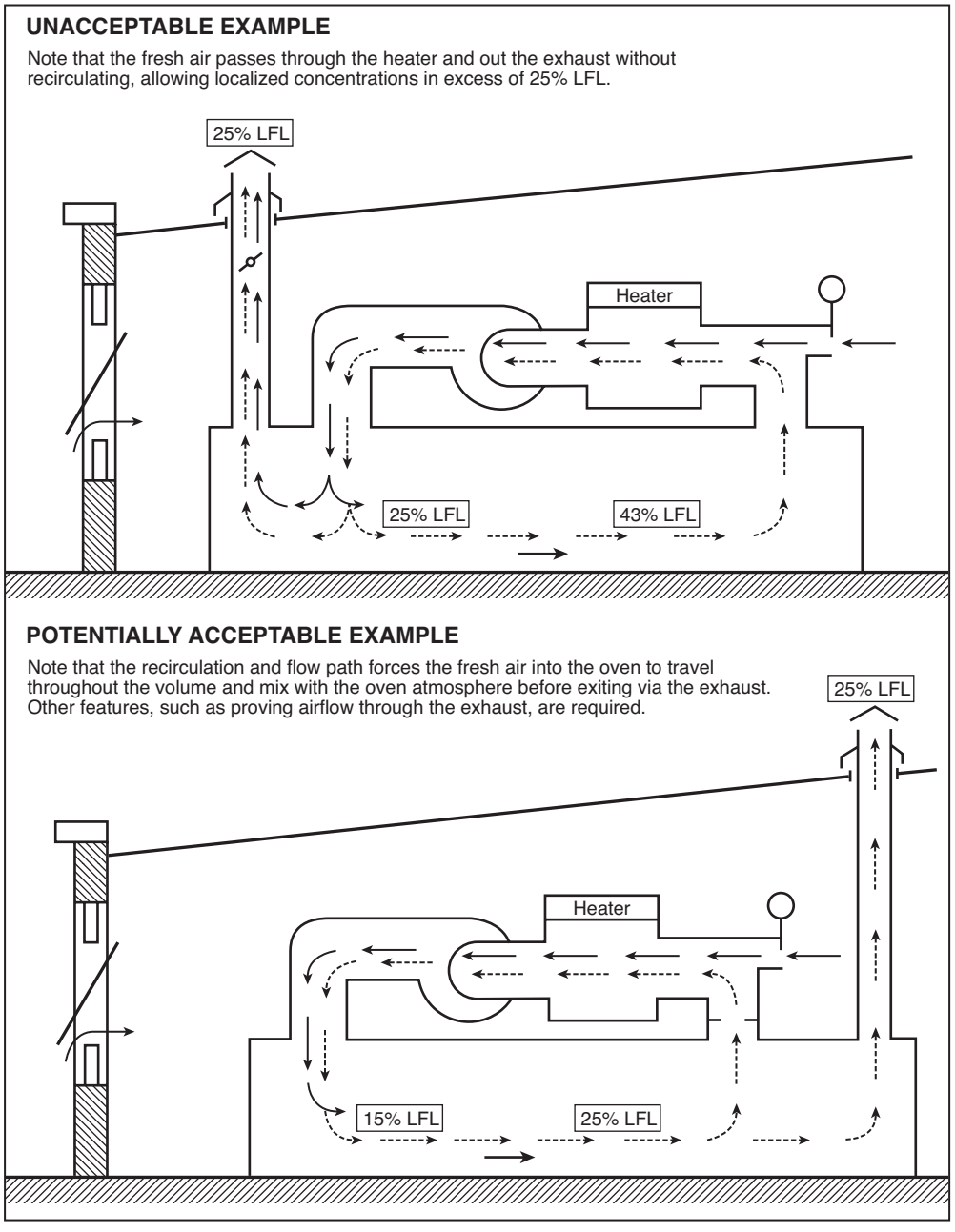

FIGURE A.11.6.1.10 Unacceptable Safety Ventilation Systems Using a Single Fan (Recirculation Combined with Spill Exhaust).

A.11.6.3.1 The installation of any equipment can increase the pressure drop of the system and therefore reduce the combustion airflow, exhaust flow, or safety ventilation.

A.11.6.5 The processes of determining the minimum safety ventilation for continuous ovens and for batch ovens are shown in Figure A.11.6.5(a) and Figure A.11.6.5(b).

A.11.6.5.1(A) *Example in U.S. Customary Units.* To draw 9200 ft^3/min of fresh air referred to 70°F (530°R) into an oven operating at 300°F (760°R), it is necessary to exhaust 13,200 actual ft^3/min of heated air.

Example in SI Units. To draw 260 m^3/min of fresh air referred to 21°C (294 K) into an oven operating at 149°C (422 K), it is necessary to exhaust 374 actual m^3/min of heated air.

All volumes and volumetric flow values should indicate temperature and pressure conditions [e.g., 100 ft^3/min at 300°F (2.83 m^3/min at 148.9°C) and ambient pressure]. [0°F (–18°C) is equivalent to 460°R (256 K).] *[See Table 11.6.5.1(B)]*

A.11.6.5.2(A) The altitude correction factor is needed because the volume of a gas varies in direct proportion to the barometric pressure.

Copyright 2014 National Fire Protection Association (NFPA). Licensed, by agreement, for individual use and download on October 4, 2014 to LEADER and READER for designated user PATTARAPORN SRITRAKOOL. No other reproduction or transmission in any form permitted without written permission of NFPA. For inquires or to report unauthorized use, contact licensing@nfpa.org.

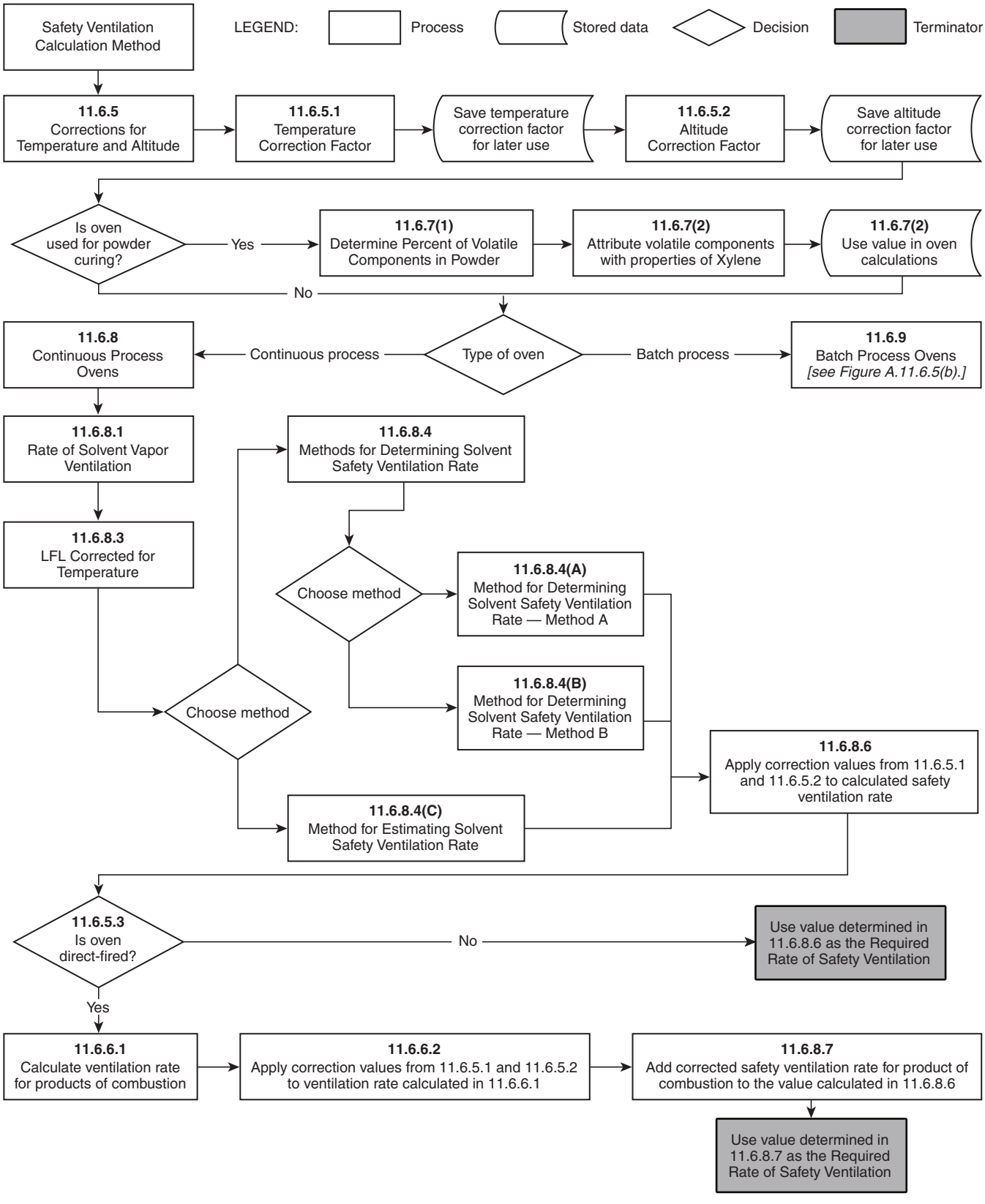

FIGURE A.11.6.5(a) Calculation of Required Safety Ventilation for Continuous Process Ovens.

Copyright 2014 National Fire Protection Association (NFPA). Licensed, by agreement, for individual use and download on October 4, 2014 to LEADER and READER for designated user PATTARAPORN SRITRAKOOL. No other reproduction or transmission in any form permitted without written permission of NFPA. For inquires or to report unauthorized use, contact licensing@nfpa.org.

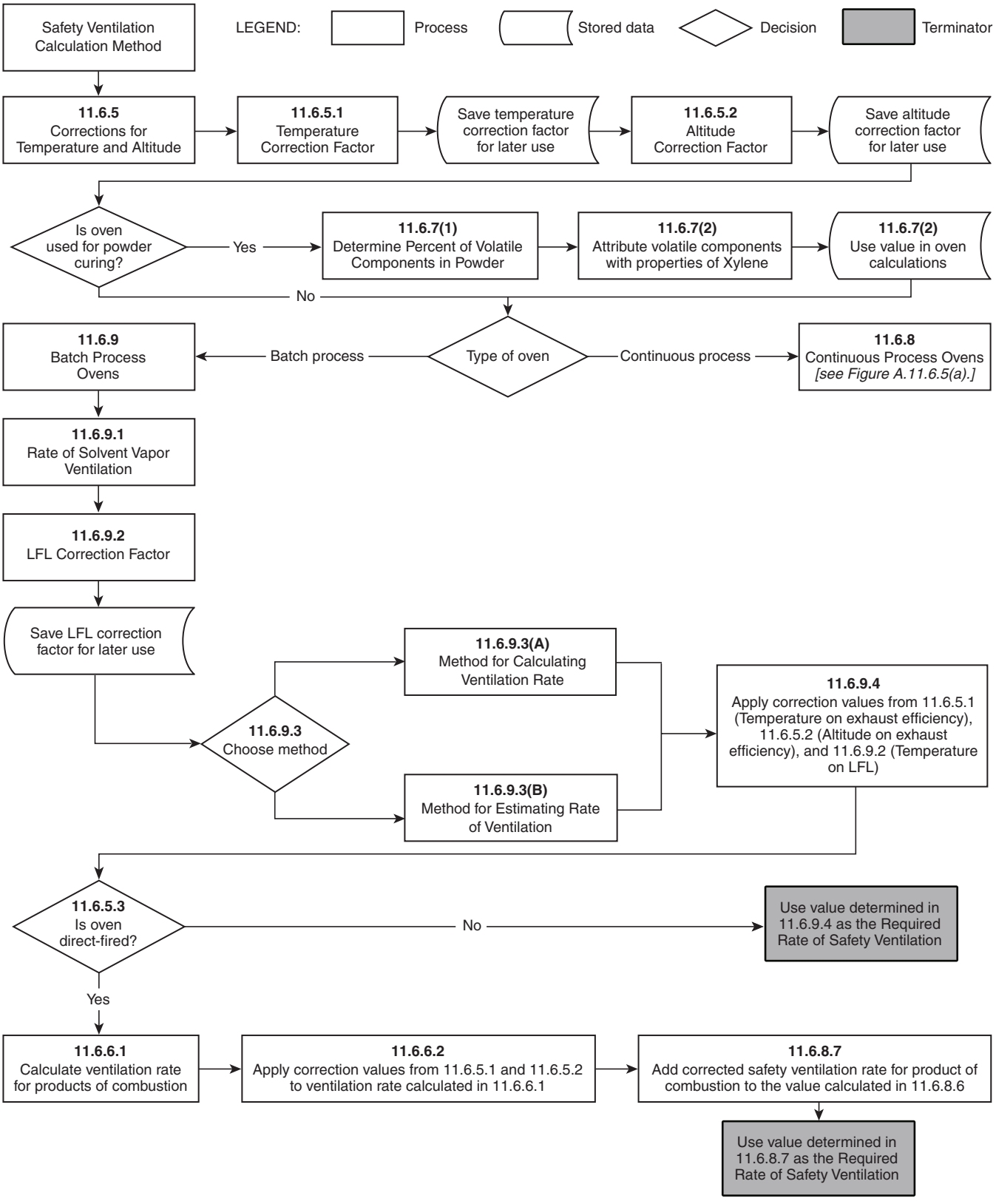

FIGURE A.11.6.5(b) Calculation of Required Safety Ventilation for Batch Process Ovens.

Copyright 2014 National Fire Protection Association (NFPA). Licensed, by agreement, for individual use and download on October 4, 2014 to LEADER and READER for designated user PATTARAPORN SRITRAKOOL. No other reproduction or transmission in any form permitted without written permission of NFPA. For inquires or to report unauthorized use, contact licensing@nfpa.org.

A.11.6.7 When the actual percent of volatile content released during the oven cure cycle is not known, 9 percent has been found to be a conservative estimate in most instances. The further requirement to treat the released volatile mixture as if it were xylene provides an additional safety factor, because xylene has one of the highest ventilation rate requirements of commonly used solvents in paint coating and curing processes.

The solvent rate for powder curing ovens is calculated as follows:

(1) Using the following equation, find the weight (W) of the powder entering the oven per hour or per batch:

$$W = \frac{S \times T}{C} \qquad \textbf{[A.11.6.7a]}$$

where:
W = maximum rate of powder delivered into oven [lb (kg)/hr or lb (kg)/batch]
S = surface area of parts to be coated [ft^2/hr (m^2/hr)]
T = maximum powder coating thickness [mil (mm)]
C = manufacturer's recommended coverage in area per weight powder for specified thickness [Typically, 1 lb of powder covers 135 ft^2 to a thickness of 0.001 in. (1 mil), and 1 kg of powder covers 0.70 m^2 to a thickness of 1 mm.]

(2) Using the following equation, find the amount (G) of solvent entering the oven per hour or per batch:

$$G = \frac{R \times W}{\text{lb (kg)/gal (L) of solvent}} \qquad \textbf{[A.11.6.7b]}$$

where:
G = amount of solvent entering the oven per hour or per batch [gal (L)]
R = percentage of powder constituents released during oven cure cycle. An accepted value for a typical powder and operating condition is 9 percent by weight, based on experimental determination. Thus, 0.09 lb or 0.09 kg of flammable constituents is released per pound or per kilogram of powder cured. (An alternative method for determining the percentage of volatile content can be found in the Powder Coating Institute publication "Recommended Practice for Determination of Volatile Content of Powder Coating Materials.")
W = maximum rate of powder delivered into oven, as determined in (1) [lb (kg)/hr or lb (kg)/batch]

Use the value calculated for G in subsequent calculations for continuous and batch process ovens per 11.6.8 and 11.6.9, respectively.

A.11.6.8 *Explanatory Materials and Methods for Calculating Ventilation in Various Types of Ovens.* The air delivered into an oven by the supply system to do the necessary work can be all fresh air (from a source outside the oven), or it can be partly fresh air and partly recirculated air from within the oven. Only the fresh air supplied provides safety ventilation, and the amount of fresh air supplied must be equivalent to the amount of oven exhaust air, to keep the system pressure in balance. The amount of air discharged from the oven by the exhaust system is a fair indication of the safety ventilation, provided the supply and exhaust systems are designed properly. The minimum amount of fresh air delivered into the oven for safety ventilation is established by the amount of solvent vaporized from the work in process. The method for determining the minimum volume of fresh air necessary for safety ventilation is provided in A.11.6.8.4.

Measurement of Quantity of Air Exhausted from an Oven. A simple method determining the quantity of air exhausted from an oven is to measure the velocity of air through the discharge duct by means of a velometer, an anemometer, a pitot tube, or other suitable means. This measurement then is used to calculate the volume (cubic feet or cubic meters) of air per minute by multiplying the velocity in lineal feet per minute (lineal meters per minute) by the cross-sectional area of the exhaust duct in square feet (square meters). The temperature of the exhaust air also should be measured, and the calculated volume then corrected to 70°F (21°C). The resultant quantity of air is an indication of the volume exhausted from the oven, provided the exhaust air does not mix with air external to the oven. In many ovens, particularly those of the continuous type, the exhaust ducts have been incorrectly placed in locations that allow outside air to enter the exhaust system together with the ventilation air exhausted from the oven.

Example: For a continuous oven, determine the parts of exhaust air at 300°F (149°C) and fresh air at 70°F (21°C) that, when mixed, produce a resultant temperature of 242.5°F (117°C), given the following conditions:

(1) The temperature reading of mixed air at discharge of the exhaust fan is 242.5°F (117°C).
(2) The temperature reading of air in the oven at exhaust site is 300°F (149°C).
(3) The temperature reading of outside air at the entrainment site is 70°F (21°C).

U.S. Customary Units

x = parts at 300°F
y = parts at 70°F
$242.5(x + y) = 300x + 70y$
$242.5x + 242.5y = 300x + 70y$
$172.5y = 57.5x$
$3y = x$

SI Units

x = parts at 149°C
y = parts at 21°C
$117(x + y) = 149x + 21y$
$117x + 117y = 149x + 21y$
$96y = 32x$
$3y = x$

Therefore, 3 parts at 300°F (149°C) + 1 part at 70°F (21°C) = 4 parts total at 242.5°F (117°C)

In this example, 75 percent of the air discharged by the exhaust fan is from inside the oven. Correcting this volume for 70°F (21°C) establishes the amount of 70°F (21°C) fresh air admitted into the oven.

In cases where all the fresh air admitted to the oven is through one or more openings where the volume(s) can be measured directly, it is not necessary to perform these calculations.

A.11.6.8.1 Because a considerable portion of the ventilating air can pass through the oven without traversing the zone in which the majority of vapors are given off, or because uniform ventilation distribution might not exist, the 25 percent concentration level introduces a 4:1 factor of safety.

Copyright 2014 National Fire Protection Association (NFPA). Licensed, by agreement, for individual use and download on October 4, 2014 to LEADER and READER for designated user PATTARAPORN SRITRAKOOL. No other reproduction or transmission in any form permitted without written permission of NFPA. For inquires or to report unauthorized use, contact licensing@nfpa.org.

A.11.6.8.3 Most LFL values are reported at 77°F (25°C), although several are given at 212°F (100°C). The LFL value decreases at higher temperatures, so it is necessary that the LFL value for a particular solvent be corrected for the operating temperature of the oven.

The formulas used in 11.6.8.3 were originally published in Bureau of Mines Bulletin 627, "Flammability Characteristics of Combustible Gases and Vapors." The temperature correction factor also can be expressed approximately as a 5 percent reduction in the LFL value for each 100°F (37.8°C) rise in temperature above 77°F (25°C).

A.11.6.8.4 Chemical properties can be obtained from manufacturers or from published data. The data in Table A.11.6.8.4(a) and Table A.11.6.8.4(b) have been obtained from NFPA 325, *Fire Hazard Properties of Flammable Liquids, Gases and Volatile Solids*, and material safety data sheets (MSDS) where available. Available figures from numerous sources vary over a wide range in many instances, depending on the purity or grade of samples and on the test conditions prescribed by different observers. (Note: Although NFPA 325 has been officially withdrawn from the *National Fire Codes*, the information is still available in NFPA's *Fire Protection Guide to Hazardous Materials*.)

It is important to obtain precise data on the rate of evaporation by actual tests on particular paint formulations in use. Multiple-component preparations might contain several solvents with widely differing values of LFL, specific gravity, and vapor density. Until such determinations are made, the operation should be on the side of safety. Therefore, the individual solvent whose data result in the largest required volume of air per gallon should be used as the basis for safe ventilation.

Sample Problem to Determine Required Ventilation. For a continuous oven, determine the volume of oven dilution air that would render vapor from a known volume of toluene barely flammable, given the following:

(1) 1 gal of water weighs 8.328 lb at 70°F; 1 L of water weighs 0.998 kg at 21°C.
(2) Dry air at 70°F and 29.9 in. Hg weighs 0.075 lb/ft^3; dry air at 21°C and 0.76 m Hg weighs 1.200 kg/m^3.
(3) 1 m^3 = 1000 L = 1000 dm^3
(4) The specific gravity (*SpGr*) of toluene = 0.87 (water = 1.0).
(5) The vapor density (*VD*) of toluene = 3.1 (air = 1.0).
(6) The LFL of toluene in air = 1.1 percent by volume *[see Table A.11.6.8.4(a) and Table A.11.6.8.4(b)]* and in the LFL calculations is expressed as 1.1 (not 0.011); this value for the LFL is at standard ambient temperature of 70°F (21°C).
(7) The measured oven exhaust temperature (t) = 300°F (149°C).
(8) The corrected LFL (LFL_T) for oven exhaust temperature is as follows *(see 11.6.8.3)*:

[A.11.6.8.4a]

$$(LFL)(LFL_{CF}) = 1.1\left[1 - 0.000784(149°C - 25°C)\right] = 0.99$$

U.S. Customary Units. The following calculation is used to determine the cubic feet (ft^3) of vapor per gallon (gal) of solvent:

[A.11.6.8.4b]

$$\left(\frac{8.328}{0.075}\right)\left(\frac{SpGr}{VD}\right) = \text{ft}^3/\text{gal at } 70°F$$

For this example:

[A.11.6.8.4c]

$$\left(\frac{8.328}{0.075}\right)\left(\frac{0.87}{3.1}\right) = 31.16 \text{ ft}^3 \text{ vapor per gal of toluene at } 70°F$$

LFL_T, being equivalent to 0.99 percent of the cubic feet of air rendered explosive by 1 gal of toluene, is as follows:

[A.11.6.8.4d]

$$31.16\left(\frac{100 - 0.99}{0.99}\right) = 3116 \text{ ft}^3 \text{ air at } 70°F \text{ per gal toluene}$$

Products of combustion must be added to this volume in accordance with 11.6.6.1 and corrections then made for higher oven exhaust temperature and, if applicable, for elevations of 1000 ft (305 m) or greater. An example of how these additional factors are applied can be found in A.11.6.7.

SI Units. The following calculation is used to determine the cubic meters (m^3) of vapor per liter (L) of solvent:

[A.11.6.8.4e]

$$\left(\frac{0.998}{1.200}\right)\left(\frac{SpGr}{VD}\right) = \text{m}^3/\text{L at } 21°C$$

For this example:

[A.11.6.8.4f]

$$\left(\frac{0.998}{1.200}\right)\left(\frac{0.87}{3.1}\right) = 0.233 \text{ m}^3 \text{ vapor per L of toluene at } 21°C$$

LFL_T, being equivalent to 0.99 percent of the cubic meters of air rendered explosive by 1 L of toluene, is as follows:

[A.11.6.8.4g]

$$0.233\left(\frac{100 - 0.99}{0.99}\right) = 23.30 \text{ m}^3 \text{ air at } 21°C \text{ per L toluene}$$

Products of combustion must be added to this volume in accordance with 11.6.6.1 and corrections then made for higher oven exhaust temperature and, if applicable, for elevations of 1000 ft (305 m) or greater. An example of how these additional factors are applied can be found in A.11.6.7.

Another Method of Computation. For this example, xylene is to be used as the solvent, as follows:

(1) The specific gravity (*SpGr*) of xylene = 0.88 (water = 1.0).
(2) The molecular weight of xylene [$C_6H_4(CH_3)_2$] = 106.
(3) The LFL of xylene in air = 0.9 percent by volume *[see Table A.11.6.8.4(a) and Table A.11.6.8.4(b)]*.
(4) The corrected LFL (LFL_T) for oven exhaust temperature is as follows *(see 11.6.8.3)*:
(LFL) (LFL_{CF}) = 0.9 [1 – 0.000784 (149°C – 25°C)] = 0.81
(5) The molecular weight in pounds of any gas or vapor occupies 387 ft^3 at 70°F and 29.9 in. of mercury. The molecular weight in grams of any gas or vapor occupies 24.1 L at 21°C and 101 kPa.

U.S. Customary Units. The weight of 1 gal xylene is as follows:

[A.11.6.8.4h]

$$0.88\left(\frac{8.328 \text{ lb } H_2O}{\text{gal}}\right) = 7.33 \text{ lb xylene/gal}$$

The volume of 1 gal xylene, when vaporized, is as follows:

[A.11.6.8.4i]

$$\frac{(7.33 \text{ lb})(387 \text{ ft}^3)}{106 \text{ (molecular weight)}}$$

Copyright 2014 National Fire Protection Association (NFPA). Licensed, by agreement, for individual use and download on October 4, 2014 to LEADER and READER for designated user PATTARAPORN SRITRAKOOL. No other reproduction or transmission in any form permitted without written permission of NFPA. For inquires or to report unauthorized use, contact licensing@nfpa.org.

Table A.11.6.8.4(a) Properties of Commonly Used Flammable Liquids in U.S. Customary Units

Solvent	Molecular Weight	Flash Point (°F)	Auto-Ignition (°F)	LFL (% by vol.)	UFL (% by vol.)	Specific Gravity (Water = 1)	Vapor Density (Air = 1)	Boiling Point (°F)	lb per gal	scf Vapor per gal	scf Vapor per lb	scf Air at LFL per gal
Acetone	58	–4	869	2.5	12.8	0.79	2.0	133	6.58	43.9	6.67	1712
n-Amyl Acetate	130	60	680	1.1	7.5	0.88	4.5	300	7.33	21.8	2.98	1961
sec-Amyl Acetate	130	89		1.0	7.5	0.88	4.5	249	7.33	21.8	2.98	2159
Amyl Alcohol	88	91	572	1.2 at 212°F	10.0 at 212°F	0.82	3.0	280	6.83	30.0	4.40	2472
Benzene	78	12	928	1.2	7.8	0.88	2.8	176	7.33	35.0	4.78	2885
Benzine	Mix	0	550	1.1	5.9	0.64	2.5		5.33	28.5	5.35	2566
n-Butyl Acetate	116	72	797	1.7	7.6	0.88	4.0	260	7.33	24.4	3.34	1413
n-Butyl Alcohol	74	98	650	1.4	11.2	0.81	2.6	243	6.75	35.3	5.23	2484
sec-Butyl Alcohol	74	75	761	1.7 at 212°F	9.8 at 212°F	0.81	2.6	201	6.75	35.3	5.23	2039
Butyl Cellosolve	118	148	472	1.1 at 200°F	12.7 at 275°F	0.90	4.1	340	7.50	24.6	3.28	2209
Butyl Propionate	130	90	799			0.88	4.5	295	7.33	21.8	2.98	
Camphor	152	150	871	0.6	3.5	0.99	5.2	399	8.24	21.1	2.55	3489
Carbon Disulfide	76	–22	194	1.3	50.0	1.26	2.6	115	10.49	53.4	5.09	4056
Cellosolve	90	110	455	1.7 at 200°F	15.6 at 200°F	0.93	3.0	275	7.75	34.6	4.46	1998
Cellosolve Acetate	132	124	715	1.7	13.0	0.98	4.7	313	8.16	23.1	2.84	1338
Chlorobenzene	113	82	1099	1.3	9.6	1.11	3.9	270	9.24	31.6	3.42	2403
Corn Oil	Mix	490	740			0.90			7.50			
Cottonseed Oil	Mix	486	650			0.90			7.50			
m-Cresol or p-Cresol	108	187	1038	1.1 at 302°F		1.03	3.7	395	8.58	30.7	3.58	2763
Cyclohexane	84	–4	473	1.3	8.0	0.78	2.9	179	6.50	29.9	4.61	2271
Cyclohexanone	98	111	788	1.1 at 212°F	9.4	0.95	3.4	313	7.91	31.2	3.95	2808
p-Cymene	134	117	817	0.7 at 212°F	5.6	0.86	4.6	349	7.16	20.7	2.93	2933
Dibutyl Phthalate	278	315	757	0.5 at 456°F		1.04	9.6	644	8.66	12.1	1.41	2399
o-Dichlorobenzene	147	151	1198	2.2	9.2	1.31	5.1	356	10.91	28.7	2.67	1276
Diethyl Ketone	86	55	842	1.6		0.81	3.0	217	6.75	30.3	4.56	1866
n-Dimethyl Formamide	73	136	833	2.2 at 212°F	15.2	0.94	2.5	307	7.83	41.5	5.37	1844
p-Dioxane	88	54	356	2.0	22.0	1.03	3.0	214	8.58	37.7	4.45	1848
Ethyl Acetate	88	24	800	2.0	11.5	0.90	3.0	171	7.50	33.0	4.45	1615
Ethyl Alcohol	46	55	685	3.3	19.0	0.79	1.6	173	6.58	55.3	8.52	1621
Ethylbenzene	106	59	810	0.8	6.7	0.87	3.7	277	7.25	26.4	3.70	3279
Ethyl Ether	74	–49	356	1.9	36.0	0.71	2.6	95	5.91	30.9	5.30	1596
Ethyl Lactate	118	115	752	1.5 at 212°F		1.04	4.1	309	8.66	28.4	3.32	1865
Ethyl Methyl Ether	60	–35	374	2.0	10.1	0.70	2.1	51	5.8	37.6	6.53	1842
Ethyl Propionate	102	54	824	1.9	11.0	0.89	3.5	210	7.4	28.1	3.84	1452
Ethylene Dichloride	99	56	775	6.2	16.0	1.30	3.4	183	10.8	42.3	3.96	640
Gasoline	Mix	–45	536	1.4	7.6	0.80	3.0–4.0		6.7	29.7	4.46	2094
n-Heptane	100	25	399	1.0	6.7	0.68	3.5	209	5.7	21.9	3.92	2169
n-Hexane	86	–7	437	1.1	7.5	0.66	3.0	156	5.5	24.7	4.56	2223
Kerosene (fuel Oil #1)	Mix	100–162	410	0.7	5.0	0.83			6.9			
Linseed Oil — Raw	Mix	432	650			0.93		600	7.7			
Magiesol 47	203	215	428	0.5		0.80	7.0	464	6.7	12.7	1.91	2527
Magiesol 52	236	265	428	0.5		0.81	8.2	518	6.7	11.1	1.64	2201

(continues)

Copyright 2014 National Fire Protection Association (NFPA). Licensed, by agreement, for individual use and download on October 4, 2014 to LEADER and READER for designated user PATTARAPORN SRITRAKOOL. No other reproduction or transmission in any form permitted without written permission of NFPA. For inquires or to report unauthorized use, contact licensing@nfpa.org.

Table A.11.6.8.4(a) *Continued*

Solvent	Molecular Weight	Flash Point (°F)	Auto-Ignition (°F)	LFL (% by vol.)	UFL (% by vol.)	Specific Gravity (Water = 1)	Vapor Density (Air = 1)	Boiling Point (°F)	lb per gal	scf Vapor per gal	scf Vapor per lb	scf Air at LFL per gal
Methyl Acetate	74	14	850	3.1	16.0	0.93	2.8	140	7.7	37.0	5.30	1157
Methyl Alcohol	32	52	725	6.0	36.0	0.79	1.1	147	6.6	79.5	12.25	1246
Methyl Carbitol	120	205	465	1.4	22.7	1.01	4.1	379	8.4	27.2	3.27	1945
Methyl Cellosolve	76	102	545	1.8	14.0	0.96	2.6	255	8.0	40.7	5.16	2220
Methyl Cellosolve Acetate	118	111		1.7	8.2	1.01	4.1	292	8.4	27.6	3.32	1595
Methyl Ethyl Ketone	72	16	759	1.4 at 200°F	11.4 at 200°F	0.80	2.5	176	6.7	35.8	5.44	2521
Methyl Lactate	104	121	725	2.2 at 212°F		1.10	3.6	293	9.2	34.1	3.77	1515
Mineral Spirits #10	Mix	104	473	0.8 at 212°F		0.80	3.9	300	6.7	22.9	3.43	2836
Naphtha (VM&P Regular)	Mix	28	450	0.9	6.0			203–320				
Naphthalene	128	174	979	0.9	5.9	1.10	4.4	424	9.2	27.7	3.06	3049
Nitrobenzene	123	190	900	1.8 at 200°F		1.25	4.3	412	10.4	32.7	3.19	1786
Nitroethane	75	82	778	3.4		1.04	2.6	237	8.7	44.7	5.23	1269
Nitromethane	61	95	785	7.3		1.13	2.1	214	9.4	59.7	6.43	758
Nitropropane-1	89	96	789	2.2		1.00	3.1	268	8.3	36.2	4.40	1609
Nitropropane-2	89	75	802	2.6	11.0	0.99	3.1	248	8.2	35.8	4.40	1343
Paraffin Oil	Mix	444				0.83–0.91						
Peanut Oil	Mix	540	833			0.90			7.5			
Perchloroethylene	166	None	None	None		1.62	5.8	250	13.5	31.1	2.36	
Petroleum Ether	Mix	<0	550	1.1	5.9	0.66	2.5		5.5	29.4	5.35	2646
Propyl Acetate	102	55	842	1.7 at 100°F	8.0	0.89	3.5	215	7.4	28.1	3.84	1626
n-Propyl Alcohol	60	74	775	2.2	13.7	0.80	2.1	207	6.7	43.0	6.53	1910
i-Propyl Alcohol	60	53	750	2.0	12.7 at 200°F	0.78	2.1	181	6.5	41.9	6.53	2052
n-Propyl Ether	102	70	370	1.3	7.0	0.75	3.5	194	6.2	23.7	3.84	1798
Pyridine	79	68	900	1.8	12.4	0.98	2.7	239	8.2	40.0	4.96	2180
Rosin Oil	Mix	266	648			1.00		680	8.3			
Soy Bean Oil	Mix	540	833			0.90			7.5			
Tetrahydrofuran	72	6	610	2.0	11.8	0.89	2.5	151	7.4	39.8	5.44	1952
Toluene	92	40	896	1.1	7.1	0.87	3.1	231	7.2	31.1	4.26	2800
Turpentine	136	95	488	0.8		0.87	4.7	300	7.2	20.6	2.88	2556
Vinyl Acetate	86	18	756	2.6	13.4	0.93	3.0	161	7.7	34.8	4.56	1305
o-Xylene	106	88	867	0.9	6.7	0.88	3.7	292	7.3	26.7	3.70	2945

LFL_T, being equivalent to 0.81 percent of the cubic feet of air rendered explosive by 1 gal xylene, is as follows:

[A.11.6.8.4j]

$$26.76\left(\frac{100-0.81}{0.81}\right) = 3277 \text{ ft}^3 \text{ air at } 70°\text{F per gal xylene}$$

Products of combustion must be added to this volume in accordance with 11.6.6.1 and corrections then made for higher oven exhaust temperature and, if applicable, for elevations of 1000 ft (305 m) or greater. An example of how these additional factors are applied can be found in A.11.6.7.

SI Units. The weight of 1 L xylene, when vaporized, is as follows:

[A.11.6.8.4k]

$$\left(\frac{0.998 \text{ kg } H_2O}{\text{L}}\right)\left(\frac{1000 \text{ g}}{\text{kg}}\right)(0.88\ SpGr) = 878 \text{ g xylene/L}$$

The volume of 1 L xylene, when vaporized, is as follows:

[A.11.6.8.4l]

$$\frac{(878 \text{ g})(24.1 \text{ L})}{106 \text{ (molecular weight)}} = 200 \text{ L xylene vapor at standard conditions}$$

LFL_T, being equivalent to 0.81 percent of the cubic meters of air rendered explosive by 1 L xylene, is as follows:

[A.11.6.8.4m]

$$200 \text{ L}\left(\frac{100-0.81}{0.81}\right)\left(\frac{1 \text{ m}^3}{1000 \text{ L}}\right) = 24.49 \text{ m}^3 \text{ air at } 21°\text{C per L xylene}$$

Products of combustion must be added to this volume in accordance with 11.6.6.1 and corrections then made for higher exhaust temperature and, if applicable, for elevations of 1000 ft (305 m) or greater. An example of how these additional factors are applied can be found in A.11.6.7.

Copyright 2014 National Fire Protection Association (NFPA). Licensed, by agreement, for individual use and download on October 4, 2014 to LEADER and READER for designated user PATTARAPORN SRITRAKOOL. No other reproduction or transmission in any form permitted without written permission of NFPA. For inquires or to report unauthorized use, contact licensing@nfpa.org.

Table A.11.6.8.4(b) Properties of Commonly Used Flammable Liquids in SI Units

Solvent	Molecular Weight	Flash Point (°C)	Auto-Ignition (°C)	LFL (% by vol.)	UFL (% by vol.)	Specific Gravity (Water = 1)	Vapor Density (Air = 1)	Boiling Point (°C)	kg per L	scm Vapor per L	scm Vapor per kg	scm Air at LFL per L
Acetone	58	–20	465	2.5	12.8	0.79	2.0	56	0.788	0.329	0.418	12.84
n-Amyl Acetate	130	16	360	1.1	7.5	0.88	4.5	149	0.878	0.164	0.186	14.72
sec-Amyl Acetate	130	32		1.0	7.5	0.88	4.5	131	0.878	0.164	0.186	16.20
Amyl Alcohol	88	33	300	1.2 at 100°C	10.0 at 100°C	0.82	3.0	138	0.818	0.225	0.275	18.55
Benzene	78	–11	498	1.2	7.8	0.88	2.8	80	0.878	0.262	0.298	21.57
Benzine	Mix	0	288	1.1	5.9	0.64	2.5		0.639	0.213	0.334	19.19
n-Butyl Acetate	116	22	425	1.7	7.6	0.88	4.0	127	0.878	0.183	0.209	10.61
n-Butyl Alcohol	74	37	343	1.4	11.2	0.81	2.6	117	0.808	0.265	0.327	18.64
sec-Butyl Alcohol	74	24	405	1.7 at 100°C	9.8 at 100°C	0.81	2.6	94	0.808	0.265	0.327	15.30
Butyl Cellosolve	118	64	244	1.1 at 93°C	12.7 at 135°C	0.90	4.1	171	0.898	0.184	0.205	16.59
Butyl Propionate	130	32	426			0.88	4.5	146	0.879	0.164	0.186	
Camphor	152	66	466	0.6	3.5	0.99	5.2	204	0.988	0.158	0.159	26.10
Carbon Disulfide	76	–30	90	1.3	50.0	1.26	2.6	46	1.258	0.401	0.319	30.44
Cellosolve	90	43	235	1.7 at 93°C	15.6 at 93°C	0.93	3.0	135	0.928	0.259	0.278	14.95
Cellosolve Acetate	132	51	379	1.7	13.0	0.98	4.7	156	0.978	0.174	0.178	10.06
Chlorobenzene	113	28	593	1.3	9.6	1.11	3.9	132	1.108	0.238	0.214	18.04
Corn Oil	Mix	254	393			0.90			0.898			
Cottonseed Oil	Mix	252	343			0.90			0.898			
m-Cresol or p-Cresol	108	86	559	1.1 at 150°C		1.03	3.7	202	1.028	0.231	0.224	20.74
Cyclohexane	84	–20	245	1.3	8.0	0.78	2.9	82	0.779	0.225	0.288	17.05
Cyclohexanone	98	44	420	1.1 at 100°C	9.4	0.95	3.4	156	0.948	0.234	0.247	21.08
p-Cymene	134	47	436	0.7 at 100°C	5.6	0.86	4.6	176	0.859	0.155	0.181	22.02
Dibutyl Phthalate	278	157	403	0.5 at 236°C		1.04	9.6	340	1.038	0.090	0.087	18.01
o-Dichlorobenzene	147	66	648	2.2	9.2	1.31	5.1	180	1.308	0.216	0.165	9.58
Diethyl Ketone	86	13	450	1.6		0.81	3.0	103	0.809	0.228	0.282	14.01
n-Dimethyl Formamide	73	58	445	2.2 at 100°C	15.2	0.94	2.5	153	0.938	0.311	0.332	13.84
p-Dioxane	88	12	180	2.0	22.0	1.03	3.0	101	1.028	0.283	0.275	13.87
Ethyl Acetate	88	–4	427	2.0	11.5	0.90	3.0	77	0.898	0.247	0.275	12.12
Ethyl Alcohol	46	13	363	3.3	19.0	0.79	1.6	78	0.789	0.415	0.527	12.17
Ethylbenzene	106	15	432	0.8	6.7	0.87	3.7	136	0.869	0.199	0.229	24.62
Ethyl Ether	74	–45	180	1.9	36.0	0.71	2.6	35	0.709	0.232	0.327	11.98
Ethyl Lactate	118	46	400	1.5 at 100°C		1.04	4.1	154	1.038	0.213	0.205	14.00
Ethyl Methyl Ether	60	–37	190	2.0	10.1	0.70	2.1	11	0.699	0.282	0.404	13.83
Ethyl Propionate	102	12	440	1.9	11.0	0.89	3.5	99	0.888	0.211	0.238	10.90
Ethyl Dichloride	99	13	413	6.2	16.0	1.30	3.4	84	1.298	0.318	0.245	4.80
Gasoline	Mix	–43	280	1.4	7.6	0.80	3.0–4.0		0.799	0.222	0.278	15.66
n-Heptane	100	–4	204	1.0	6.7	0.68	3.5	98	0.679	0.164	0.241	16.23
n-Hexane	86	–22	225	1.1	7.5	0.66	3.0	69	0.659	0.186	0.282	16.69
Kerosene (fuel Oil #1)	Mix	38–72	210	0.7	5.0	0.83			0.829			
Linseed Oil — Raw	Mix	222	343			0.93		316	0.928			
Magiesol 47	203	102	220	0.5		0.80	7.0	240	0.799	0.095	0.119	18.97
Magiesol 52	236	129	220	0.5		0.81	8.2	270	0.809	0.083	0.102	16.46

(continues)

Copyright 2014 National Fire Protection Association (NFPA). Licensed, by agreement, for individual use and download on October 4, 2014 to LEADER and READER for designated user PATTARAPORN SRITRAKOOL. No other reproduction or transmission in any form permitted without written permission of NFPA. For inquires or to report unauthorized use, contact licensing@nfpa.org.

Table A.11.6.8.4(b) *Continued*

Solvent	Molecular Weight	Flash Point (°C)	Auto-Ignition (°C)	LFL (% by vol.)	UFL (% by vol.)	Specific Gravity (Water = 1)	Vapor Density (Air = 1)	Boiling Point (°C)	kg per L	scm Vapor per L	scm Vapor per kg	scm Air at LFL per L
Methyl Acetate	74	–10	454	3.1	16.0	0.93	2.8	60	0.928	0.277	0.298	8.66
Methyl Alcohol	32	11	385	6.0	36.0	0.79	1.1	64	0.789	0.597	0.757	9.35
Methyl Carbitol	120	96	241	1.4	22.7	1.01	4.1	193	1.008	0.204	0.202	14.55
Methyl Cellosolve	76	39	285	1.8	14.0	0.96	2.6	124	0.958	0.306	0.319	16.67
Methyl Cellosolve Acetate	118	44		1.7	8.2	1.01	4.1	144	1.008	0.207	0.205	11.97
Methyl Ethyl Ketone	72	–9	404	1.4 at 93°C	11.4 at 93°C	0.80	2.5	80	0.799	0.269	0.336	18.93
Methyl Lactate	104	49	385	2.2 at 100°C		1.10	3.6	145	1.098	0.256	0.233	11.37
Mineral Spirits #10	Mix	40	245	0.8 at 100°C		0.80	3.9	149	0.799	0.171	0.214	21.21
Naphtha (VM&P Regular)	Mix	–2	232	0.9	6.0			95–160				
Naphthalene	128	79	526	0.9	5.9	1.10	4.4	218	1.098	0.208	0.189	22.89
Nitrobenzene	123	88	482	1.8 at 93°C		1.25	4.3	211	1.248	0.245	0.196	13.36
Nitroethane	75	28	414	3.4		1.04	2.6	114	1.038	0.335	0.323	9.53
Nitromethane	61	35	418	7.3		1.13	2.1	101	1.128	0.448	0.397	5.69
Nitropropane-1	89	36	421	2.2		1.00	3.1	131	0.998	0.272	0.272	12.08
Nitropropane-2	89	24	428	2.6	11.0	0.99	3.1	120	0.988	0.269	0.272	10.08
Paraffin Oil	Mix	229				0.83–0.91						
Peanut Oil	Mix	282	445			0.90			0.898			
Perchloroethylene	166	None	None	None		1.62	5.8	121	1.617	0.233	0.144	
Petroleum Ether	Mix	<–18	288	1.1	5.9	0.66	2.5		0.659	0.220	0.334	19.80
Propyl Acetate	102	13	450	1.7 at 38°C	8.0	0.89	3.5	102	0.888	0.211	0.238	12.20
n-Propyl Alcohol	60	23	413	2.2	13.7	0.80	2.1	97	0.799	0.322	0.404	14.34
i-Propyl Alcohol	60	11	399	2.0	12.7 at 93°C	0.78	2.1	83	0.779	0.314	0.404	15.41
n-Propyl Ether	102	21	188	1.3	7.0	0.75	3.5	90	0.749	0.178	0.238	13.50
Pyridine	79	20	482	1.8	12.4	0.98	2.7	115	0.978	0.300	0.307	16.37
Rosin Oil	Mix	130	342			1.00		360	0.998			
Soy Bean Oil	Mix	282	445			0.90			0.898			
Tetrahydrofuran	72	–14	321	2.0	11.8	0.89	2.5	66	0.888	0.299	0.336	14.65
Toluene	92	4	480	1.1	7.1	0.87	3.1	111	0.869	0.234	0.269	21.04
Turpentine	136	35	253	0.8		0.87	4.7	149	0.869	0.155	0.178	19.19
Vinyl Acetate	86	–8	402	2.6	13.4	0.93	3.0	72	0.928	0.262	0.282	9.80
o-Xylene	106	31	464	0.9	6.7	0.88	3.7	144	0.879	0.201	0.229	22.11

A.11.6.8.4(C) The basis for the general rule is that 1 gal of typical solvent produces a quantity of flammable vapor that, when diffused in air, forms approximately 2640 scf of a lean mixture that is barely explosive (1 L of a typical solvent forms approximately 19.75 standard m^3 of a lean mixture that is barely explosive). Refer to Table A.11.6.8.4(a) and Table A.11.6.8.4(b). The value of 12,000 ft^3 (340 m^3) includes a factor to account for LFL correction at 350°F (177°C).

A.11.6.8.5 Caution is needed when determining the maximum allowable gallons per minute of solvent entering the oven. It is not uncommon for designers to propose that only a fraction of the solvent actually enters an oven zone since much of the solvent has already been driven off either in a flash-off booth or in upstream oven zones. Because proof of safety ventilation is based on the measuring of exhaust, contaminated infiltration air from these upstream processes can represent a significant fraction of the air used for safety ventilation, particularly during "upset conditions" in which the oven exhaust and recirculation systems might be imbalanced.

Moreover, many airflow proving devices are not able to prove minimum airflow rates with any accuracy; rather, they prove air movement. Accordingly, assumptions that an exhaust airflow switch proves an exhaust airflow rate sufficient to dilute solvent vapor to 25% LFL_T must take into account variables introduced by changes in damper settings and the potential for a fraction of infiltration air to be contaminated by flammable vapors.

A general common solution cannot be provided due to the large number of variations in design and operation parameters for oven curing processes.

Copyright 2014 National Fire Protection Association (NFPA). Licensed, by agreement, for individual use and download on October 4, 2014 to LEADER and READER for designated user PATTARAPORN SRITRAKOOL. No other reproduction or transmission in any form permitted without written permission of NFPA. For inquires or to report unauthorized use, contact licensing@nfpa.org.

A.11.6.9 Following are sample calculations for batch ovens.

Example 1. Sample calculations for electrically heated batch oven processes coated metal using approximation method. Dipped product through batch oven operating at 300°F (149°C) at sea level. Volatiles in paint = 3 gal (11.4 L) of volatiles (mostly methyl ethyl ketone) per batch into oven.

U.S. Customary Units. Required ventilation, theoretically not to reach the LFL *[see 11.6.9.3 and 11.6.5]*, is as follows:

[A.11.6.9a]

$$(440\ \text{scfm})\left(\frac{3\ \text{gal}}{\text{batch}}\right)(1.4\ \text{factor}) = 1848\ \text{scfm air}$$

Correction for oven temperature is as follows:

[A.11.6.9b]

$$1848\left(\frac{300°\text{F} + 460°\text{F}}{70°\text{F} + 460°\text{F}}\right) = 2650\ \text{ft}^3/\text{min of air at } 300°\text{F}$$

SI Units. Required ventilation, theoretically not to reach the LFL *[see 11.6.9.3 and 11.6.5]*, is as follows:

[A.11.6.9c]

$$\left(\frac{3.29\ \text{standard m}^3}{\text{min}}\right)\left(\frac{11.4\ \text{L}}{\text{batch}}\right)(1.4\ \text{factor})$$

$$= 52.5\ \text{standard m}^3/\text{min of air}$$

Correction for oven temperature is as follows:

[A.11.6.9d]

$$52.5\left(\frac{149°\text{C} + 273°\text{C}}{21°\text{C} + 273°\text{C}}\right) = 75.3\ \text{m}^3/\text{min of air at } 149°\text{C}$$

Example 2. Sample calculations for electrically heated batch oven processes ventilation calculation using test measurements. Batch oven operating at 255°F (124°C) at sea level curing transformer coils impregnated with coating containing 4.8 gal (18.2 L) of volatiles, mostly toluene. Tests under operating conditions indicate that over 5 hours were needed to evaporate all volatiles with the peak evaporation rate occurring in the first 5 minutes after loading, at a rate of 0.06 gal/min (0.227 L/min). The calculated ventilation rate, including a temperature correction factor for LFL for batch ovens *[see 11.6.9.2 and 11.6.5]*, is as follows:

U.S. Customary Units. Barely flammable mixture at peak evaporation rate *[see Table A.11.6.8.4(a) and Table A.11.6.8.4(b)]* is as follows:

[A.11.6.9e]

$$\left(\frac{2800\ \text{scf air}}{\text{gal toluene}}\right)\left(\frac{0.06\ \text{gal}}{\text{min}}\right) = 168\ \text{scfm mixture at LEL}$$

Safety ventilation calculation is as follows:

168 scfm × 4 (factor of safety) × 1.4 (LFL temperature adjustment) = 941 scfm of air

Correction for oven temperature is as follows:

[A.11.6.9f]

$$(941\ \text{scfm})\left(\frac{255°\text{F} + 460°\text{F}}{70°\text{F} + 460°\text{F}}\right) = 1269\ \text{ft}^3/\text{min of air at } 255°\text{F}$$

SI Units. Barely flammable mixture at peak evaporation rate *[see Table A.11.6.8.4(a) and Table A.11.6.8.4(b)]* is as follows:

[A.11.6.9g]

$$\left(\frac{21.04\ \text{standard m}^3\ \text{air}}{\text{L toluene}}\right)\left(\frac{0.227\ \text{L}}{\text{min}}\right)$$

$$= 4.78\ \text{standard m}^3\ \text{mixture/min at LEL}$$

Safety ventilation calculation is as follows:

[A.11.6.9h]

$$\frac{4.78\ \text{m}^3}{\text{min}} \times 4(\text{factor of safety}) \times 1.4$$

$$(\text{LFL temperature adjustment}) = 26.77\ \text{standard m}^3/\text{min}$$

Correction for oven temperature is as follows:

[A.11.6.9i]

$$\left(\frac{26.77\ \text{standard m}^3}{\text{min}}\right)\left(\frac{124°\text{C} + 273°\text{C}}{21°\text{C} + 273°\text{C}}\right) = \begin{matrix}36.15\ \text{m}^3/\text{min} \\ \text{of air at } 124°\text{C}\end{matrix}$$

Example 3. Sample calculations for electrically heated batch oven processes; known solvent volume. A batch oven cures a load of fiber rings impregnated with thinned asphalt at 480°F (249°C), the volatiles being mostly Mineral Spirits No. 10. From weight tests of samples removed throughout the cure, it was established that the maximum amount of volatiles evaporated in any 1-hour period is 2.3 gal (8.7 L), and the total weight loss throughout the cure is equivalent to 6.6 gal (25.0 L). The installation is at sea level. The estimated ventilation required in 11.6.9.2.

U.S. Customary Units. Barely flammable mixture of Mineral Spirits No. 10 *[see Table A.11.6.8.4(a) and Table A.11.6.8.4(b)]* is as follows:

[A.11.6.9j]

$$\left(\frac{2836\ \text{ft}^3\ \text{mixture}}{\text{gal M.S. No.10}}\right)\left(\frac{2.3\ \text{gal}}{\text{hr}}\right)$$

$$= 6523\ \text{scf/hr mixture at LFL}$$

Calculated ventilation volume is as follows:

[A.11.6.9k]

$$6523\ \text{scfm} \times \frac{10}{60} \times 1.4\ (\text{LFL temp. adjustment}) = 1522\ \text{scfm of air}$$

Correction for oven temperature is as follows:

[A.11.6.9l]

$$(1522\ \text{scfm})\left(\frac{480°\text{F} + 460°\text{F}}{70°\text{F} + 460°\text{F}}\right) = 2699\ \text{ft}^3/\text{min of air at } 480°\text{F}$$

SI Units. Barely flammable mixture of Mineral Spirits No. 10 *[see Table A.11.6.8.4(a) and Table A.11.6.8.4(b)]* is as follows:

[A.11.6.9m]

$$\left(\frac{21.21\ \text{m}^3\ \text{mixture}}{\text{L M.S. No. 10}}\right)\left(\frac{8.7\ \text{L}}{\text{hr}}\right)$$

$$= 184.5\ \text{standard m}^3/\text{hr mixture at LFL}$$

Copyright 2014 National Fire Protection Association (NFPA). Licensed, by agreement, for individual use and download on October 4, 2014 to LEADER and READER for designated user PATTARAPORN SRITRAKOOL. No other reproduction or transmission in any form permitted without written permission of NFPA. For inquires or to report unauthorized use, contact licensing@nfpa.org.

Calculated ventilation volume is as follows:

[A.11.6.9n]

$$\frac{184.5\ \text{m}^3}{\text{hr}} \times \frac{10}{60} \times 1.4\ \text{(LFL temp. adjustment)}$$

$$= 43.1\ \text{standard m}^3/\text{min of air}$$

Correction for oven temperature is as follows:

[A.11.6.9o]

$$\left(\frac{43.1\ \text{standard m}^3}{\text{hr}}\right)\left(\frac{249°\text{C} + 273°\text{C}}{21°\text{C} + 273°\text{C}}\right)$$

$$= 76.21\ \text{m}^3/\text{min of air at } 249°\text{C}$$

A.11.6.9.1 There are numerous factors to consider, including the initial solvent load when the batch oven is charged at the initial and operating temperatures over time, the ventilation rate, the effect of temperature on the solvent LFL, and the altitude. The calculation and estimation methods provided in this standard have been found by empirical test data and successful operation over time to prevent concentrations over LFL. No calculation method can account for unpredicted upset conditions or improper operation.

A.11.6.9.3 Industrial experience indicates that the nature of the work being cured is the main factor in determining the safety ventilation rate. Different types of work produce different rates of evaporation, and field tests show that sheet metal or parts coated by dipping generally produce the highest evaporation rates. Tests and years of experience have shown that 440 scfm of air per gal (3.29 standard m^3/min of air per L) of flammable volatiles is reasonably safe for dipped metal.

A.11.6.9.3(B)(2) *Explanatory Materials and Methods for Calculating Ventilation in Various Types of Ovens.* The air delivered into an oven by the supply system to do the necessary work can be all fresh air (from a source outside the oven), or it can be partly fresh air and partly recirculated air from within the oven. Only the fresh air supplied provides safety ventilation, and the amount of fresh air supplied must be equivalent to the amount of oven exhaust air, to keep the system pressure in balance. The amount of air discharged from the oven by the exhaust system is a fair indication of the safety ventilation, provided the supply system and the exhaust system are designed properly. The minimum amount of fresh air delivered into the oven for safety ventilation is established by the amount of solvent vaporized from the work in process. The method for determining the minimum volume of fresh air necessary for safety ventilation is provided in A.11.6.7.

Measurement of Quantity of Air Exhausted from an Oven. A simple method of determining the quantity of air exhausted from an oven is to measure the velocity of air through the discharge duct by means of a velometer, an anemometer, a pitot tube, or other suitable means. This measurement then is used to calculate the volume (cubic feet or cubic meters) of air per minute by multiplying the velocity in lineal feet per minute (lineal meters per minute) by the cross-sectional area of the exhaust duct in square feet (square meters). The temperature of the exhaust air also should be measured and the calculated volume then corrected to 70°F (21°C). The resultant quantity of air is an indication of the volume exhausted from the oven, provided the exhaust air does not mix with air external to the oven. In many ovens, particularly those of the continuous type, the exhaust ducts have been incorrectly placed in locations that allow outside air to enter the exhaust system together with the ventilation air exhausted from the oven.

Example: For a continuous oven, determine the parts of exhaust air at 300°F (149°C) and fresh air at 70°F (21°C) that, when mixed, produce a resultant temperature of 242.5°F (117°C), given the following conditions:

(1) The temperature reading of mixed air at discharge of the exhaust fan is 242.5°F (117°C).
(2) The temperature reading of air in oven at exhaust site is 300°F (149°C).
(3) The temperature reading of outside air at the entrainment site is 70°F (21°C).

U.S. Customary Units

x = parts at 300°F

y = parts at 70°F

$242.5(x + y) = 300x + 70y$

$242.5x + 242.5y = 300x + 70y$

$172.5y = 57.5x$

$3y = x$

SI Units

x = parts at 149°C

y = parts at 21°C

$117(x + y) = 149x + 21y$

$117x + 117y = 149x + 21y$

$96y = 32x$

$3y = x$

Therefore, 3 parts at 300°F (149°C) + 1 part at 70°F (21°C) = 4 parts total at 242.5°F (117°C)

In this example, 75 percent of the air discharged by the exhaust fan is from inside the oven. Correcting this volume for 70°F (21°C) establishes the amount of 70°F (21°C) fresh air admitted into the oven.

In cases where all the fresh air admitted to the oven is through one or more openings where the volume(s) can be measured directly, it is not necessary to perform these calculations.

A.11.6.9.4 Extensive tests have been conducted by Underwriters Laboratories Inc. (Bulletin of Research No. 43, "The Lower Limit of Flammability and the Autogenous Ignition Temperature of Certain Common Solvent Vapors Encountered in Ovens") to obtain data regarding the effect of elevated temperatures on the LFL of many of the solvents commonly used in connection with ovens. These tests show that the LFL of all solvents tested decreases as the temperature increases, leading to the conclusion that more air [referred to 70°F (21°C)] is required for safety per gallon (liter) of solvent as the oven temperature increases. The actual figures vary considerably with different solvents.

A.11.6.10.2 In many operations, the continuous vapor concentration high limit controller could be required to respond to an upset condition in less than 5 seconds to detect transient upsets. This response requires the controller to be located close to the sampling point to minimize transport time and generally precludes the use of one controller sequentially sampling multiple points.

Copyright 2014 National Fire Protection Association (NFPA). Licensed, by agreement, for individual use and download on October 4, 2014 to LEADER and READER for designated user PATTARAPORN SRITRAKOOL. No other reproduction or transmission in any form permitted without written permission of NFPA. For inquires or to report unauthorized use, contact licensing@nfpa.org.

A.11.6.10.3 Figure A.11.6.10.3(a), Figure A.11.6.10.3(b), and Figure A.11.6.10.3(c) provide examples of heating zones. To show that a given process line will not exceed 25 percent LFL requires detailed knowledge, modeling, and testing of the process.

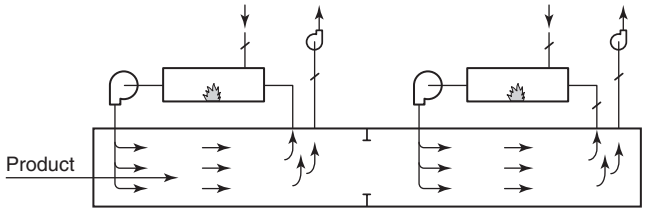

FIGURE A.11.6.10.3(a) Two Heating Zones — Separate Exhaust Fans.

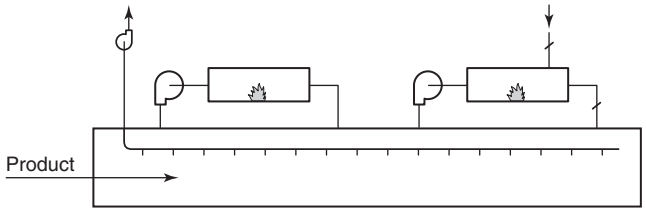

FIGURE A.11.6.10.3(b) Two Heating Zones — Common Exhaust Fan with Internal Exhaust Plenum.

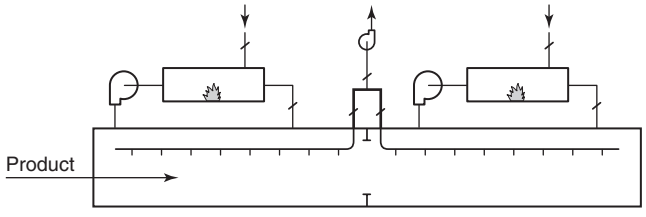

FIGURE A.11.6.10.3(c) Two Heating Zones — Common Exhaust Fan.

A.11.6.10.4 When a continuous vapor concentration controller is used to modulate the flow of fresh air into or exhaust from an oven, there is a possibility that a malfunction of the controller will lead to a hazardous situation. For that reason, another protection system is required. The simplest form of backup is a fixed damper stop that is set so that the oven solvent concentration cannot exceed 50 percent LFL for the highest design solvent input rate. The disadvantage of the fixed damper stop is that it limits the ability of the controls to reduce the dilution air when the solvent input is low. Increased flexibility is the main advantage for using a separate continuous vapor concentration high limit controller as the system backup.

A.11.6.10.9 The sequence might include opening the exhaust and fresh air dampers, shutting down heaters, stopping the conveyor or web, stopping the coating process, and stopping or removing the coating material.

A.11.7.1.2 Low-oxygen ovens, also called inert ovens, operate safely at a much higher concentration of solvent vapor by limiting the oxygen concentration. Oxygen concentration within the appropriate equipment is kept low by the addition of an inert gas. *(See Figure A.11.7.1.2.)*

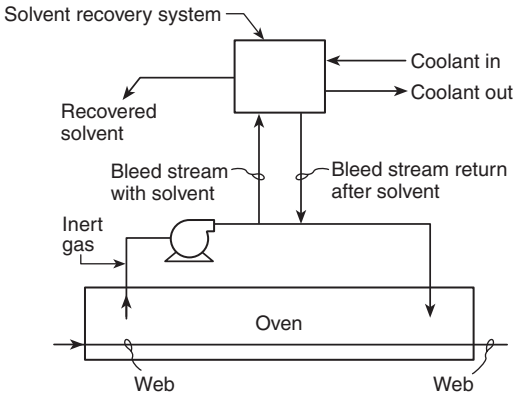

FIGURE A.11.7.1.2 Example of a Low-Oxygen Oven with a Solvent Recovery System.

A.11.7.2 Solvent vapors are not flammable below a certain oxygen concentration, which is different for each solvent. See the table in A.11.7.10(5)(5) for the flammability of many solvents and the figure in A.11.7.12(1)(1) for the flammable region for two common solvents.

A.11.7.2.2 A solvent storage system might include a condenser system, pumps, filters, tanks, level controls, and distillation equipment.

A.11.7.4(3) Ventilation should be provided at the oven openings to capture any escaping solvent vapors.

A.11.7.5 All storage tanks and compressed gas cylinders should comply with local, state, and federal codes and applicable NFPA standards relating to the types of fluids stored, their pressures, and their temperatures.

A.11.7.6.6 A flow-limiting device such as a critical flow–metering orifice, sized to limit the flow at the maximum inlet pressure, can fulfill this requirement.

A.11.7.7.1 The flow rate can be varied during the course of the process cycle.

A.11.7.8.3 Commercial-grade carbon steel pipe exhibits a marked reduction in impact strength when cooled to subzero temperatures. Consequently, it is vulnerable to impact fracture if located downstream of a vaporizer running beyond its rated vaporization capacity or at very low ambient temperature.

A.11.7.9.1 The core of the safety system is the reliable monitoring of oxygen on a continuous basis, with shutdown if the oxygen level becomes too high.

A.11.7.9.3 Personnel should be provided with independent analyses of solvent and oxygen concentration before entry. *(See Chapter 7 and Annex B.)*

A.11.7.10(5) See Table A.11.7.10(5).

Copyright 2014 National Fire Protection Association (NFPA). Licensed, by agreement, for individual use and download on October 4, 2014 to LEADER and READER for designated user PATTARAPORN SRITRAKOOL. No other reproduction or transmission in any form permitted without written permission of NFPA. For inquires or to report unauthorized use, contact licensing@nfpa.org.

Table A.11.7.10(5) Summary of Flammability Characteristics of Selected Gases and Vapors

Gas or Vapor	Flammability Limits [vol. %] in Air		Oxygen Limit [vol. %] Above Which Deflagration Can Take Place		Reference(s)
	LFL	UFL	Nitrogen as Diluent of Air	Carbon Dioxide as Diluent of Air	
Paraffin Hydrocarbons					
Methane	5	15	12	14.5	2,3,5,6,7
Ethane	3	12.5	11	13.5	2,3,5,6
Propane	2.1	9.5	11.5	14.5	2,3,5,6
n-Butane	1.9	8.5	12	14.5	2,3,5,6
Isobutane	1.8	8.4	12	15	2,3,5,6
n-Pentane	1.5	7.8	12	14.5	2,3,5,6
2,2-Dimethylpropane	1.4	7.5	NA	NA	2,4,5,6,7
Isopentane	1.4	7.6	12	14.5	2,3,4,5,6,7
n-Hexane	1.1	7.5	11.9	14.5	2,3,4,5,6,7
2,3-Dimethylpentane	1.1	6.7	NA	NA	2,4,5,6
n-Heptane	1	6.7	11.5	14.5	2,3,5,6
n-Octane	1	6.5	NA	NA	2,4,5,6
n-Nonane	0.8	2.9	NA	NA	2,4,5,6
n-Decane	0.8	5.4	NA	NA	2,4,5,6
Olefins					
Ethylene	2.7	36	10	11.5	1,3,4,5,6,7
Propylene	2	11.1	11.5	14	3,4,5,6,7
2-Butene-cis	1.7	9	NA	NA	3,5,6,7
1-Butene	1.6	10	11.5	14	3,4,5,6,7
Amylene	1.4	8.7	NA	NA	3,5,6,7
Aromatics					
Benzene	1.2	7.8	11.4	14	1,3,4,5,6,7
Toluene	1.1	7.1	9.5	NA	1,3,4,5,6
o-Xylene	0.9	6.7	NA	NA	1,3,4,5,6,7
Cyclic Hydrocarbons					
Cyclopropane	2.4	10.4	11.5	14	2,3,4,5,6
Cyclohexane	1.3	8	NA	NA	4,5,6
Methylcyclohexane	1.2	6.7	NA	NA	4,5,6
Alcohols					
Methyl alcohol	6	36	10	12	3,5,6,7
Ethyl alcohol	3.3	19	NA	NA	2,3,4,5,6
Allyl alcohol	2.5	18	NA	NA	3,4,5,6,7
n-Propyl alcohol	2.2	13.7	NA	NA	3,4,5,6,7
Isopropyl alcohol	2	12.7	NA	NA	3,4,5,6,7
Isobutyl alcohol	1.7	11	NA	NA	4,5,6
n-Butyl alcohol	1.4	11.2	NA	NA	3,4,5,7
Isoamyl alcohol	1.2	9.0[a]	NA	NA	4,5,6
n-Amyl alcohol	1.2	10.0[a]	NA	NA	3,4,5,6
Amines					
Ethyl amine	3.5	14	NA	NA	1,3,4,5,6,7
Dimethyl amine	2.8	14.4	NA	NA	1,3,4,5,6,7
Propyl amine	2	10.4	NA	NA	1,3,4,5,6,7
Trimethyl amine	2	12	NA	NA	1,3,4,5,6,7
Diethyl amine	1.8	10.1	NA	NA	1,3,4,5,6,7
Triethyl amine	1.2	8	NA	NA	1,3,4,5,6,7

Copyright 2014 National Fire Protection Association (NFPA). Licensed, by agreement, for individual use and download on October 4, 2014 to LEADER and READER for designated user PATTARAPORN SRITRAKOOL. No other reproduction or transmission in any form permitted without written permission of NFPA. For inquires or to report unauthorized use, contact licensing@nfpa.org.

Table A.11.7.10(5) *Continued*

Gas or Vapor	Flammability Limits [vol. %] in Air		Oxygen Limit [vol. %] Above Which Deflagration Can Take Place		Reference(s)
	LFL	UFL	Nitrogen as Diluent of Air	Carbon Dioxide as Diluent of Air	
Aldehydes					
Formaldehyde	7	73	NA	NA	1,5
Acetaldehyde	4	60	NA	NA	1,4,5,6,7
Crotonic aldehyde	2.1	15.5	NA	NA	1,4,5,6,7
Furfural	2.1	19.3	NA	NA	1,4,5,6,7
Paraldehyde	1.3	NA	NA	NA	1,4,5,6,7
Ethers					
Methylethyl ether	2	10.1	NA	NA	4,5,6
Diethyl ether	1.9	36	NA	NA	1,4,5,6
Divinyl ether	1.7	27	NA	NA	4,5,6
Ketones					
Acetone	2.5	12.8	11.5	14	3,4,5,6,7
Methylethyl ketone	1.4[b]	11.4[b]	11	13.5	3,4,5,6,7
Methylbutyl ketone	1.3	8	NA	NA	3,4,5,6,7
Esters					
Methyl acetate	3.1	16	NA	NA	3,4,5,6,7
Ethyl formate	2.75	16	NA	NA	2,4,6
Ethyl acetate	2	11.5	NA	NA	3,4,5,6,7
Isopropyl acetate	1.8	8	NA	NA	2,4,5,6
n-Propyl acetate	1.7[a]	8	NA	NA	2,3,4,5,6
n-Butyl acetate	1.7	7.6	NA	NA	2,3,4,5,6
n-Amyl acetate	1.1	7.5	NA	NA	2,3,4,5,6
Nitrogen Compound					
Ethyl nitrate	3.8	NA	NA	NA	4,5,6
Ethyl nitrite	3.01	50	NA	NA	4,5,6
Pyridine	1.81	12.4	NA	NA	1,3,4,5,6,7
Oxides					
Ethylene oxide	3	100	NA	NA	1,3,4,5,6
Diethyl peroxide	2.34	NA	NA	NA	4
Propylene oxide	2.1	37	NA	NA	1,4,5
p-Dioxan	2	22	NA	NA	4,5,6
Chlorides					
Ethyl chloride	3.8	15.4	NA	NA	3,4,5,6,7
Vinyl chloride	3.6	33	13.4	NA	2,3,4,5,6
Propylene dichloride	3.2	14.5	NA	NA	2,4,5,6
Allyl chloride	2.9	11.1	NA	NA	2,4,5,6
Propyl chloride	2.6	11.1	NA	NA	4,5,6,7
Isobutyl chloride	2	8.8	NA	NA	4,5,7
n-Butyl chloride	1.8	10.1	14	NA	3,4,5,7
n-Amyl chloride	1.6	8.6	NA	NA	4,5,6,7
Miscellaneous Organic					
Acetylene	2.5	100	NA	NA	2,4,5,6
Carbon disulfide	1.3	50	5	7.5	2,3,4,5,6
Turpentine	0.8	1	NA	NA	3,4,5

(continues)

Copyright 2014 National Fire Protection Association (NFPA). Licensed, by agreement, for individual use and download on October 4, 2014 to LEADER and READER for designated user PATTARAPORN SRITRAKOOL. No other reproduction or transmission in any form permitted without written permission of NFPA. For inquires or to report unauthorized use, contact licensing@nfpa.org.

Table A.11.7.10(5) *Continued*

Gas or Vapor	Flammability Limits [vol. %] in Air		Oxygen Limit [vol. %] Above Which Deflagration Can Take Place		Reference(s)
	LFL	UFL	Nitrogen as Diluent of Air	Carbon Dioxide as Diluent of Air	
Industrial Mixtures					
Pittsbugh natural gas	4.8	13.5	12	14.4	3,5,7
Other natural gases	3.8–6.5	13–17	NA	NA	5,7
Benzine	1.1	5.9	NA	NA	3,5,7
Gasoline	1.4	7.6	11.6	14.4	3,5,7
Gasoline 73/100	1.4	7.6	12	15	3,5,7
Gasoline 100/130	1.3	7.1	12	15	3,5,7
Gasoline 115/145	1.2	7.1	12	14.5	3,5,7
Naphtha (VM&P regular)	0.9	6	NA	NA	3,5,7
Kerosene (fuel oil No.1)	0.7	5	10.0[c]	13.0[c]	3,5,7
Coal gas	5.3	32	11.5	14.4	5,7
Coke-oven gas	4.4	34	NA	NA	5,7
Blast furnace gas	35	74	NA	NA	5,7
Inorganic					
Hydrogen	4	75	5	5.2	1,5,6,7
Ammonia	15	28	NA	NA	1,5,6,7
Hydrogen sulfide	4	46	7.5	11.5	1,3,5,6,7
Carbon monoxide	12	75	5.5	5.5	1,3,5,7

Note: The data were determined by laboratory experiment conducted at atmospheric pressure and temperature, with the exception of those gases or vapors marked as follows:
[a]100°C (212°F)
[b]93°C (199.4°F)
[c]150°C (302°F)
References:
(1) NFPA 49, *Hazardous Chemicals Data*, 1994 edition.
(2) NFPA 69, *Standard on Explosion Prevention Systems*, 1997 edition.
(3) NFPA 86, *Standard for Ovens and Furnaces*, 1999 edition.
(4) NFPA 86D, *Standard for Industrial Furnaces Using Vacuum as an Atmosphere*, 1999 edition.
(5) NFPA 325, *Fire-Hazard Properties of Flammable Liquids, Gases and Volatile Solids.*
(6) U.S. Bureau of Mines Bulletin 627, "Flammability Characteristics of Combustible Gases and Vapors."
(7) U.S. Bureau of Mines Bulletin 503, "Limits of Flammability of Gases and Vapors."
(8) B. Lewis and G. Von Elbe, *Combustion, Flames and Explosions of Gases.*

A.11.7.11 See Table A.11.7.10(5).

A.11.7.12(1) See Figure A.11.7.12(1).

A.12.5.1 The installation of any equipment can increase the pressure drop of the system and therefore reduce the flow rate.

A.13.5.1.3 See A.6.2.6.3.

A.13.5.2 The combustion reaction is self-supporting and gives off heat (i.e., it is exothermic). The usual combustion range is from 60 percent to 100 percent of the stoichiometric ratio (aeration). In exothermic generators, the combustion products become the atmosphere gas; therefore, the gaseous constituents supplied to exothermic generators are called *fuel gas* and *air.*

A.13.5.2.1 Cuprous acetylide (Cu_2C_2) is formed by exposure of acetylene to copper in an alkaline aqueous environment. When the water is removed and the cuprous acetylide is dried out, a minor impact or frictional force will cause a violent, explosive reaction.

Acetylene is produced in small quantities in the exothermic gas-generating process. Water is a by-product of the exothermic atmosphere-generating process, and in many designs water is used to directly cool the gas. The water can be alkaline due to many chemical influences internal or external to the gas-generating equipment.

A.13.5.3 Subsection 13.5.3 applies to those generators that require the addition of heat to complete the reaction of the gas and air generating the atmosphere and in which the atmosphere being generated is separated at all times from the heating combustion products or other heating medium.

The separation of atmosphere is effected by use of retorts, tubes, pipes, or other special vessels. To simplify this standard, all gas used in the reaction with air to create the atmosphere is called *reaction gas*, and all air used in this reaction is called *reaction air.* Gas burned with air to supply heat is called *fuel gas*, and all air used with the fuel gas is called *combustion air.* The atmosphere produced in the generator from heating the mixture of reaction gas and reaction air is called *special atmosphere gas.* The reaction gas and the fuel gas might or might not be the same type of gas.

Copyright 2014 National Fire Protection Association (NFPA). Licensed, by agreement, for individual use and download on October 4, 2014 to LEADER and READER for designated user PATTARAPORN SRITRAKOOL. No other reproduction or transmission in any form permitted without written permission of NFPA. For inquires or to report unauthorized use, contact licensing@nfpa.org.

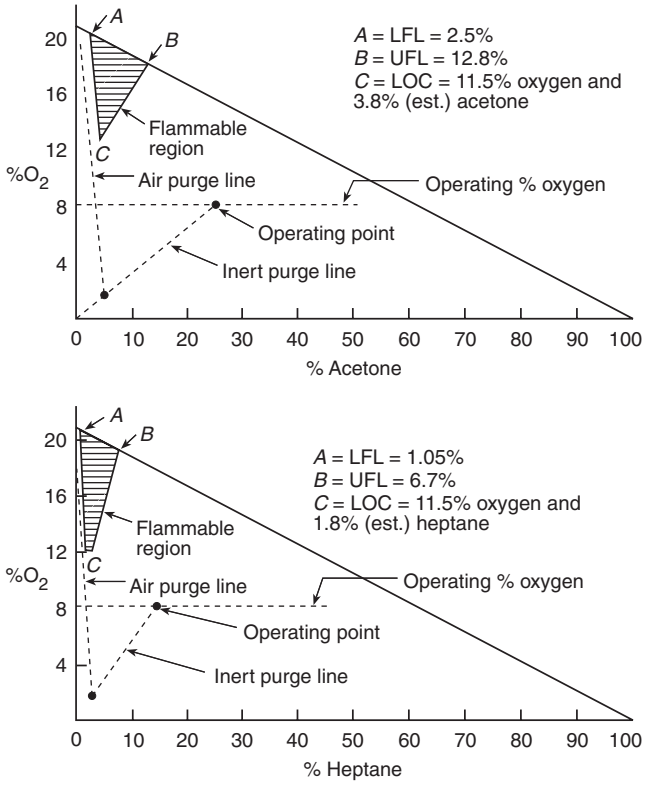

Note: To purge from any operating point on the 8 percent oxygen operating line, purge with inert gas to reach the solvent concentration at *C* (LOC), then purge with air. This avoids passing through the flammability region by a comfortable margin.

FIGURE A.11.7.12(1) Example of Purging Requirements. ***(Source: Bureau of Mines Bulletin 627, pp. 32, 77)***

A.13.5.3.5 Certain system designs can require additional approved protective equipment to the reaction section, and the following components should be considered:

(1) Flowmeters
(2) Meters or pressure gauges on the reaction gas and reaction air supplies

A.13.5.4 Subsection 13.5.4 applies to those types of generators in which ammonia is dissociated into hydrogen and nitrogen by the action of heat and is separated at all times from the heating combustion products or other heating medium.

A.13.5.4.2(A) Certain system designs can require additional approved protective equipment, and the following components should be considered:

(1) Flow indicators
(2) Meters
(3) Pressure gauges on reaction gas

A.13.5.5 Vaporizers used for safety purging to convert cryogenic liquids to the gas state should be ambient air heat transfer units so that flow from such vaporizers is unaffected by the loss of power.

The use of powered vaporizers is permitted where one of the following conditions is satisfied:

(1) The vaporizer has reserve heating capacity to continue vaporizing at least five furnace volumes at the required purge flow rate immediately following power interruption.
(2) Reserve ambient vaporizers are provided that are piped to the source of supply so that they are unaffected by a freeze-up or flow stoppage of gas from the powered vaporizer. The reserve vaporizers should be capable of evaporating at least five furnace volumes at the required purge flow rate.
(3) Purge gas is available from an alternative source that is capable of supplying five volume changes after interruption of the flow of the atmosphere gas to the furnace.

Vaporizers should be rated by the industrial gas supplier or the owner to vaporize at 150 percent of the highest purge gas demand for all connected equipment. Winter temperature extremes for the locale should be taken into consideration by the agency responsible for rating the vaporizers.

The industrial gas supplier should be informed of additions to the plant that materially increase the inert gas consumption rate so that vaporizer and storage capacity can be resized for the revised requirements.

A temperature indicator should be installed in the vaporizer outlet piping for use in evaluating its evaporation performance at any time.

A device should be installed that prevents the flow rate of gas from exceeding the vaporizer capacity and thereby threatening the integrity of downstream equipment or control devices due to exposure to cryogenic fluids. A break in the downstream pipeline or failure (opening) of the supply pressure regulator could cause excessive flow. Exceeding the capacity of an atmospheric vaporizer leads to a gradual decrease in gas temperature that can be remedied by decreasing the demand on the vaporizer.

In atmospheric vaporizers, in lieu of the flow-limiting device, a visual and audible alarm should indicate to operators in the vicinity of the furnace that the temperature of the vaporizer outlet gas has fallen below a minimum level, indicating a potential to exceed vaporizer capacity.

A.13.5.5.1(C)(4) For additional information, see the following Compressed Gas Association (CGA) guidelines:

(1) CGA G-2, *Anhydrous Ammonia*
(2) CGA G-2.1/ANSI K61.1, *Safety Requirements for the Storage and Handling of Anhydrous Ammonia*
(3) CGA G-5, *Hydrogen*
(4) CGA G-6, *Carbon Dioxide*
(5) CGA G-6.1, *Standard for Low Pressure Carbon Dioxide Systems at Consumer Sites*
(6) CGA P-1, *Safe Handling of Compressed Gases in Containers*

A.13.5.6 Gas atmosphere mixing systems are used to create special processing atmospheres made up of two or more gases. The majority are built to create binary nitrogen–hydrogen blends, but they also are able to create mixtures of other gases. The blended gas of gas atmosphere mixing systems usually has a constant flammable or indeterminate composition and is supplied on a pressure or demand basis to the special processing atmosphere flow controls situated at one or more furnaces.

Gas atmosphere mixing systems typically incorporate a surge tank mixing scheme that cycles between set pressure limits. This feature distinguishes them from the flow control systems covered in 13.5.7.

A.13.5.6(1) Consideration should be given to the inclusion of filters or strainers to improve reliable functioning of pressure

Copyright 2014 National Fire Protection Association (NFPA). Licensed, by agreement, for individual use and download on October 4, 2014 to LEADER and READER for designated user PATTARAPORN SRITRAKOOL. No other reproduction or transmission in any form permitted without written permission of NFPA. For inquires or to report unauthorized use, contact licensing@nfpa.org.

regulators, flowmeters, flow monitors, control valves, and other components.

A.13.5.7.1 The object of this requirement is to prevent infiltration of air that could be detrimental to the work being processed or could result in the creation of flammable gas–air mixtures within the furnace. The flow rates can be varied during the course of a heat treatment cycle.

A.13.5.7.3 After closure of an outer vestibule door of a batch-type furnace or a pusher furnace, a delay usually occurs before burn-off resumes at the vent opening. The duration of the delay depends on the special atmosphere flow rate, its combustibles content, the vestibule volume, and other factors.

A.13.5.7.4(B) The indication of flow is intended to be provided by a device that will indicate flow any time a flow is occurring, including during a power outage. A mechanical device that indicates the flow rate without using any source of power except the physical flow of the inert purge gas meets this requirement. The uncertainty of a reliable backup power supply, such as backup batteries or an uninterruptible power supply, during a primary power interruption precludes the use of "electronic" monitoring of flow.

A.13.5.8.3 Inadequate dissociation results in lessened atmosphere expansion, which causes a reduction in furnace pressure and thereby creates an air infiltration hazard.

Insufficient temperature also can create a condition in which unvolatized atmosphere fluid is carried into the quench tank, changing the physical characteristics of the quench oil, such as increasing the vapor pressure and lowering the flash point.

A.13.5.8.11 Filters or strainers should be provided to ensure reliable functioning of pressure regulators, flowmeters, flow monitors, control valves, and other components.

A.13.5.8.12(1) Paragraph 13.5.8.12(1) addresses excess flow in the equipment piping for an individual furnace. This involves a device at the special atmosphere control panel, such as an electronic sensor, along with logic to close an automatic shutoff valve upon detection of excess flow. Paragraph 13.5.8.12(1) does not preclude operational high flow set points at thresholds below the shutoff excess flow set point. The operational high flow set points can be provided to initiate alarms that prompt operator intervention to restore appropriate flow levels before the shutoff excess flow level is reached.

A.13.5.10 Refer to the definitions for *special atmosphere* in 3.3.67.

A.13.5.11.1(B) Failure to maintain positive pressure in a furnace can allow air infiltration. Air infiltration can occur at effluents, open ends, or the perimeter of doors. In addition, welds in a furnace shell can break, gasketed joints can fail, and radiant tube heaters can be breached, all of which could introduce additional sources of air infiltration. Furnaces should be designed to minimize sources of air infiltration. In addition, furnace shell joints and radiant tube heaters should be periodically evaluated or tested and repaired as needed. Should positive furnace pressure be lost in furnaces or chambers operating below 1400°F (760°C), air infiltration can lead to a flammable gas–air mixture that can result in an explosion. Loss of positive furnace pressure can be caused by an inadequate flow of carrier gases or loss of furnace heat, and loss of furnace heat will lead to the thermal contraction of the atmosphere volume.

A.13.5.11.1(C) The character of the flame at furnace open ends and special atmosphere effluents will be a function of the specific furnace. It is essential for the furnace operator to be trained to recognize the "established character" of these flames. In addition, the operator should be aware of the typical timing for flame to appear at open ends and effluent vents.

A.13.5.11.1(D) The fluid in a bubbler can be water or oil. Bubblers might be provided to protect a furnace from overpressure or to maintain a minimum positive atmosphere pressure within the furnace. Bubblers also can control pressure within a bell furnace using an oil seal. Overpressure of the retort or work chamber could blow the oil out of the seal ring. It is also possible to have water condensation accumulate in a bubbler bottle that can add to the liquid level and allow an increase in furnace pressure, which could increase furnace pressure to excessive levels and lead to the loss of oil seals.

A.13.5.11.1(E) Where flammable atmosphere effluent is released unburned to the interior of a building, the accumulation of flammable gases could create a fire or explosion hazard. To avoid this hazard, effluent that will not reliably ignite upon contact with air should be captured by a hood and discharged to a safe outside location. See also A.6.2.6.3, which addresses additional hazards.

A.13.5.11.1(F) The use of plant air with reducing regulators is prohibited. Plant air lines can become slugged with water passing into the heated furnace resulting in abnormally high furnace pressures. Plant air lines can experience regulator failures resulting in high-pressure air admission into a furnace that contains a flammable atmosphere.

A.13.5.11.2(B) Burn-off pilots using full premix (fuel–gas mixed with all the air needed to support full combustion) and glow plugs are examples of ignition sources meeting the intent of A.13.5.11.2(B). Full premix burn-off pilots have sufficient air (or, more precisely, sufficient oxygen in air) premixed with the fuel gas to maintain the burn-off pilot if the purge gas or special atmosphere gas otherwise creates an oxygen-deficient atmosphere that would not support the burning of the burn-off pilot flame.

A.13.5.11.2(C) Where loss of ignition of vent effluent creates either an environmental or a personal safety concern, the pilot flame should be monitored and an alarm generated to alert the operator to loss of flame.

A.13.5.11.2(E) The ability to open doors manually in emergency situations is needed. Upon the simultaneous loss of furnace atmosphere and door pilot supervision, there will be a need to purge or manually open doors to burn-out vestibules that use an alternative source of ignition.

A.13.5.11.2(G) If burn-off pilots were equipped with flame supervision interlocked to turn fuel gas off to the burn-off pilot upon loss of flame, the burn-off pilots would also be turned off in the event of a power failure. The loss of burn-off pilots at special atmosphere effluent points during a power failure is undesirable and would create a serious safety concern with reliably maintaining ignition of effluents. Where flame supervision is provided, it is for an alarm to draw attention to the need to relight the burn-off pilot or it is interlocked to prevent the opening of a furnace door.

A.13.5.11.2(H) Burn-off pilots should be located where they will contact the effluent stream. For example, for a lighter-than-air effluent flowing from a furnace open end, the effluent most likely will be encountered at the top of the opening.

Copyright 2014 National Fire Protection Association (NFPA). Licensed, by agreement, for individual use and download on October 4, 2014 to LEADER and READER for designated user PATTARAPORN SRITRAKOOL. No other reproduction or transmission in any form permitted without written permission of NFPA. For inquires or to report unauthorized use, contact licensing@nfpa.org.

A.13.5.11.2(J) Burn-off pilots are not to be interrupted by any action other than closing of their individual manual shutoff valve or closing of the main equipment manual shutoff valve.

A.13.5.11.3 Regarding items (2) and (5), once a door begins to open, it is intended that the door will be permitted to open completely. The interlock is only intended to prevent a closed door from opening.

A.13.5.11.3(6) The manual override is provided for abnormal conditions to permit the manual removal of special atmospheres from the furnace.

A.13.5.11.6.1(A) Purge effectiveness can be compromised by actions such as operating furnace doors, operating quench elevators, introducing work, and operating fans not included in the purge process. Purge effectiveness can also be compromised by not running fans required to effect the purge. Avoiding such actions can be accomplished by written operating procedures or interlocks.

A.13.5.11.6.4 Verification of flammable special atmosphere safety shutoff valves being closed can be accomplished by operator observation.

A.13.5.11.6.7 Flammable atmosphere–air interfaces occur at doors, open ends, effluents, and other locations where the flammable atmosphere contacts air. Active sources of ignition include door burn-off pilots, flame curtains, manual torches, door effluents above 1400°F (760°C), glow plugs, and hot door parts above 1400°F (760°C). Atmosphere–air interfaces can be avoided by a nitrogen seal.

Where a furnace has open ends or doors, a flame of established character appearing at open ends or atmosphere effluents indicates that the atmosphere introduction has been completed or is being maintained.

Furnaces without open ends or doors, such as bell furnaces and strip processing furnaces with sealed entrance and exit, might not have ignited effluent lines. As such, the operator might not know if or when the flammable atmosphere introduction is complete; however, because the furnace is sealed and positive pressure is maintained, this is not a safety concern. The operator is not using the effluent flame as an indicator for determining when to cycle loads or operate doors.

The character of the flame at furnace open ends and special atmosphere effluents is a function of the specific furnace. It is essential that the furnace operator be trained to recognize the "established character" of these flames.

A.13.5.11.6.8 The furnace volume includes chambers, zones, covers, and retorts that contain the flammable special atmosphere within the furnace. Ductwork associated with recirculating fans such as jet coolers are considered part of the furnace volume, as are features such as large door housings or chambers and large pusher chain or mechanism housings that are exposed to the flammable special atmosphere.

A.13.5.11.6.11(4) Oil level directly affects the volume of the vestibule. Flammable special atmosphere introduction should not begin without quench oil being at the appropriate level. Atmosphere introduction should not be interrupted once started.

A.13.5.11.6.12 The character of the flame at furnace open ends and special atmosphere effluents will be a function of the specific furnace. It is essential that the furnace operator be trained to recognize the "established character" of these flames. In addition, the operator should be aware of the typical timing for flame to appear at open ends and effluent vents.

Furnaces, such as heating-cover types, that have no open ends, doors, or effluent lines will have no features to provide indicators of visible flame. This is an acceptable arrangement and is addressed by the specific furnace design and operating instructions.

A.13.5.11.7.1(A) Burn-in effectiveness can be compromised by actions that are not included in the burn-in operating instructions. Furnace doors, quench elevators, and fans should not be operated except in accordance with written burn-in operating instructions. Work should not be introduced into a furnace during the burn-in process. Burn-in effectiveness can also be compromised by running or not running fans in accordance with written burn-in instructions.

A.13.5.11.7.2 The burn-in process is anticipated to reduce the oxygen level within the furnace to a point at or below 1 percent as the oxygen in air is consumed by the burn-in process.

A.13.5.11.7.3 Any flammable atmosphere gas introduced into a chamber at or above 1400°F (760°C) will be reliably ignited by auto-ignition. An alternative method of atmosphere gas ignition, beyond just the burning flame front, might be needed where the burning atmosphere gas enters chambers below 1400°F (760°C).

A.13.5.11.7.4 Long cooling tunnels can extinguish the burning atmosphere flame front by cooling the atmosphere gas as it moves along the length of the tunnel.

A.13.5.11.7.5 In some furnace designs, such as the Type II furnace (integral quench batch furnace), manual torches might be needed as a means to reliably ignite flammable atmosphere gas as it flows into the cool vestibule chamber from the hot heating chamber. Written burn-in instructions for the specific furnace will outline the specific sequence to follow for burn-in. The following burn-in procedure for a Type II furnace is provided as one example:

(1) Atmosphere gas is introduced into the hot heating chamber and auto-ignites. Ignition is visually verified, and the inner heating chamber door is closed.
(2) A port in the closed inner door allows the atmosphere gas to flow from the heating chamber to the vestibule chamber. A manual torch placed at this port ignites the atmosphere gas.
(3) Once ignition is visually verified at the inner door port, the manual torch is removed and the outer vestibule door is closed, and the vestibule is allowed to burn-in.
(4) Burn-in of the vestibule is visually confirmed once a steady flame appears at the vestibule atmosphere effluent vent.

A.13.5.11.7.6 To avoid adverse effects on the special atmosphere in the heat zone and vestibule, the heating chamber fan is turned off when the inner door is open. One adverse effect could be the creation of atmosphere flow in the vestibule, that could draw in air around the steel-to-steel contact between the vestibule door and the furnace shell. Also, during initial furnace burn-in, the operator typically will be instructed to visually verify ignition of the special atmosphere gas as it is introduced to the heating chamber. That requires both the heating chamber door and the vestibule door to be open and the heating chamber fan to be off to allow visual observation.

A.13.5.11.7.7 During burn-in, cooling zone fans are to be turned off to avoid disrupting the flame front burning

Copyright 2014 National Fire Protection Association (NFPA). Licensed, by agreement, for individual use and download on October 4, 2014 to LEADER and READER for designated user PATTARAPORN SRITRAKOOL. No other reproduction or transmission in any form permitted without written permission of NFPA. For inquires or to report unauthorized use, contact licensing@nfpa.org.

through the cooling chamber. If a furnace is being heated, the heat zone fans typically need to be kept in service to avoid thermal damage. In a cooling chamber, the only ignition source is the flame front, which is easily disrupted by fan circulation. In a heating chamber above 1400°F (760°C), the entire environment is an ignition source, and fans will not adversely affect the reliability of ignition.

A.13.5.11.7.8(B) The retort or inner cover of a Type VIII furnace and the cover of a Type IX furnace will be sealed to the base. Sand seals, oil seals, or rubber seals can be used.

A.13.5.11.7.8(C) The means to maintain furnace pressure below the static head pressure of the seal oil include the use of bubblers or manometers on vent lines. Other means may be possible. Also see A.13.5.11.1(E).

A.13.5.11.7.10 The character of the flame at furnace open ends and special atmosphere effluents will be a function of the specific furnace. It is essential that the furnace operator be trained to recognize the "established character" of these flames. In addition, the operator should be aware of the typical timing for flame to appear at open ends and effluent vents.

Furnaces, such as heating-cover types, that have no open ends, doors, or effluent lines will have no features to provide indicators of visible flame. This is an acceptable arrangement and is addressed by the specific furnace design and operating instructions.

A.13.5.11.8.1(A) Purge effectiveness can be compromised by actions such as operating furnace doors, operating quench elevators, introducing work, and operating fans not included in the purge process. Purge effectiveness can also be compromised by not running the fans required to effect the purge. Avoiding such actions should be addressed by written operating procedures or by interlocks.

A.13.5.11.8.3 Oxidizing special atmosphere gases include air.

A.13.5.11.8.4 The furnace volume includes chambers, zones, covers, and retorts that contain the flammable special atmosphere within the furnace. Ductwork associated with recirculating fans such as jet coolers is considered part of the furnace volume, as is the space in the furnace steel shell but above the refractory arch if flammable special atmosphere gas can permeate into that space. Flammable special atmosphere gases such as hydrogen may migrate into an above-arch space during operation and may require special purging facilities to remove them during the purge-out process.

A.13.5.11.8.5 Chambers include heating chamber, cooling chambers, vestibules, door housings, and other atmosphere containing volumes that would create a hazard if not specifically purged.

A.13.5.11.9.1(A) Burn-out effectiveness can be compromised by actions that are not included in the burn-out operating instructions. Furnace doors, quench elevators, and fans should not be operated except in accordance with written burn-out operating instructions. Work should not be introduced into a furnace during the burn-out process. Burn-out effectiveness can also be compromised by not running fans required to effect the burn-out.

A.13.5.11.9.1(B) Typically, where doors are present, the burnout procedure will begin with all inner and outer doors closed. The outermost chamber will be burned-out first.

A.13.5.11.9.2 Burn-out can be accomplished by introducing air by a number of means, including open ends, vents, opening doors, header and feed pipes of burnout manifold systems, process air piping, and so forth. Uncontrolled admission of air can lead to excessive temperatures in some furnaces. Opening doors can create a draft through a furnace that can push ignited atmosphere out other openings, and instructions should be carefully developed to avoid such conditions. The written procedures required in 13.5.11.9.1 should provide step-by-step instructions for a controlled burn-out.

With hot furnaces that contain soot, it is possible to re-form a flammable atmosphere that may require additional air introduction procedures to effect final burn-out.

A.13.5.11.9.3 For Type IX furnaces (cover), visual observation of burn-out is not possible until the cover is removed. Written burn-out procedures will typically include the following actions:

(1) Release the mechanical clamping devices holding the heating cover to the base.
(2) Ignite the manual burn-off pilots or torches and place them in position at the heating cover to the base seal to ignite flammable gases that might be present inside the cover as the seal is broken.

A.13.5.11.9.3(2)(a) The requirement for the furnace to be under positive pressure is to eliminate the concern that an indeterminate atmosphere might develop in furnace chambers under 1400°F (760°C). With some furnace burn-out procedures (e.g., opening doors), initiating the burn-out can cause the furnace pressure to immediately fall to atmospheric pressure. This is not an issue once the burn-out procedure has been initiated.

A.13.5.11.9.6 During burn-out, fans are to be turned off to avoid disrupting the flame front burning back through to the special atmosphere gas source.

A.13.5.11.10 See Figure A.13.5.11.10.

A.13.5.11.10.2.1 One of the following secondary equipment isolation means should be provided immediately downstream of the equipment isolation manual shutoff valve so that no leakage of gas passing the equipment isolation manual shutoff valve can enter the downstream special atmosphere piping:

(1) Removable spool piece
(2) Breakable flanges with loosely inserted blinding plate
(3) Blinding plate secured between flanges
(4) A second valve with venting of the intermediate space between this valve and the special atmosphere manual isolation valve

Two manual shutoff valves in series without venting of the intermediate space would not be considered equivalent to the above choices.

A.13.5.11.10.3(B) See A.6.2.6.3.

A.13.5.11.10.3(D) Vent line sizing in accordance with 13.5.11.10.3 is intended to avoid the operation of individual devices from affecting (cross-impulsing) other manifolded devices under normal operations. Under upset conditions in which a device diaphragm fails, the vent line will direct the release gas to a suitable location, but it would not necessarily avoid adverse control impact upon other manifolded devices. It should be noted that special atmosphere gases typically operate at low pressure and utilize regulators with large diaphragms that are more sensitive to pressure pulses across interconnected vent lines.

Copyright 2014 National Fire Protection Association (NFPA). Licensed, by agreement, for individual use and download on October 4, 2014 to LEADER and READER for designated user PATTARAPORN SRITRAKOOL. No other reproduction or transmission in any form permitted without written permission of NFPA. For inquires or to report unauthorized use, contact licensing@nfpa.org.

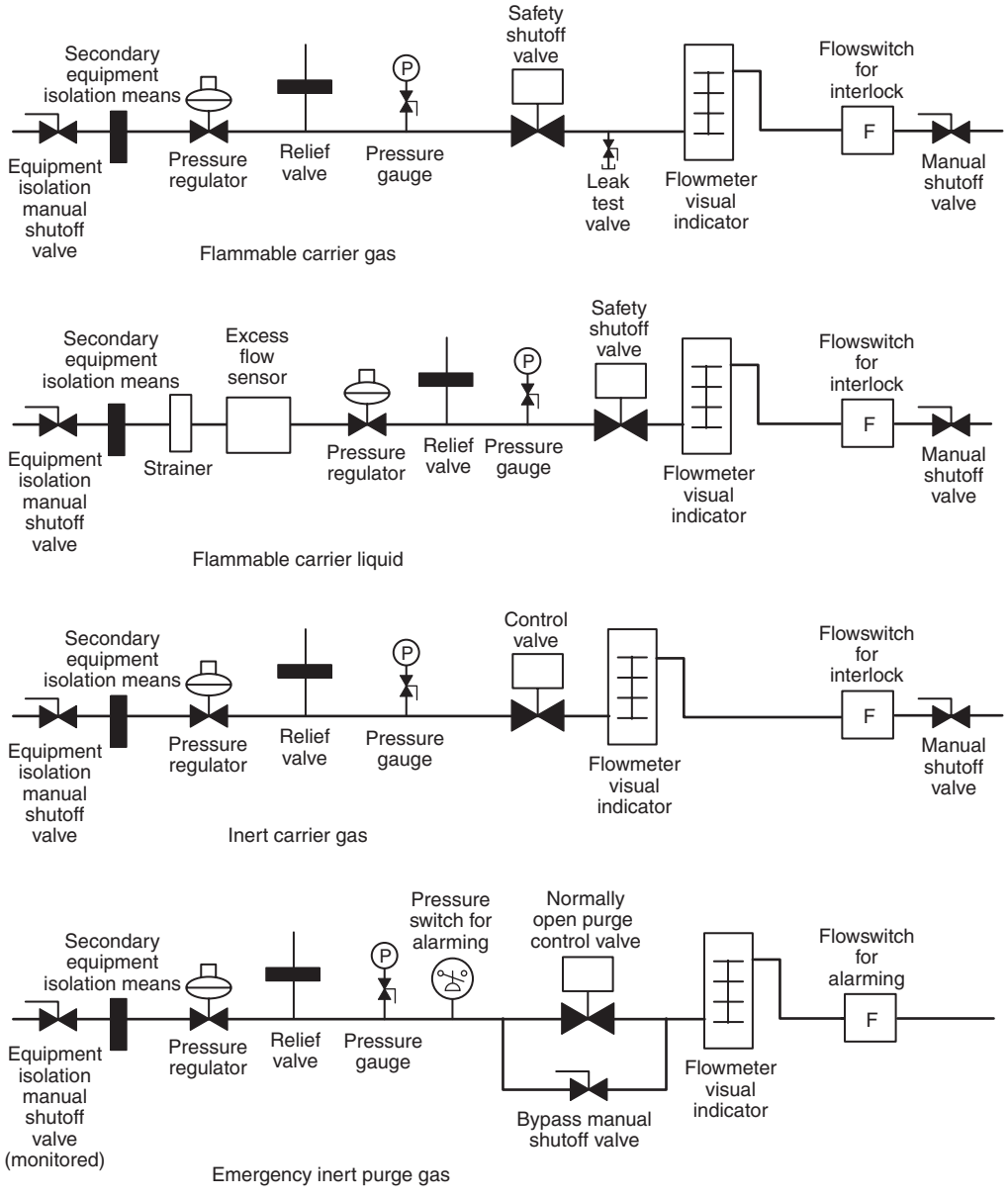

FIGURE A.13.5.11.10 Examples of Special Atmosphere Equipment Piping.

A.13.5.11.10.4(A) Typically, relief valves would not be provided for generated special atmosphere gases. Relief valves might not be needed for enriching gas where the fuel gas supply to the furnace is equipped with multiple pressure regulators and where the failure of any one pressure regulator would not introduce excessive pressures to the special atmosphere system downstream of the failed pressure regulator. Relief valves might be needed for liquid special atmospheres or special atmosphere gases provided from pressurized storage vessels.

A.13.5.11.10.4(B) Overpresurization of the liquid special atmosphere piping can occur if liquid is isolated in the piping between closed valves and exposed to an increase in temperature. Closed valves can include manual valves, automatic valves, or safety shutoff valves. Other means of controlling pressure could include an accumulator or an expansion tank.

A.13.5.11.10.4(C) See A.6.2.6.3. Also, for atmosphere gases supplied in the liquid state, relief valves can be piped back to the liquid storage vessel.

A.13.5.11.10.8 Atmosphere impingement on the temperature control thermocouple can result in overheating of the furnace or erroneous control readings on the over temperature thermocouple.

A.13.5.11.11.8 The means can be either electrical or mechanical. Mechanical means would include the operation of valves in the special atmosphere piping. For some applications, additional manual action might be required to bring the process to a safe condition.

Copyright 2014 National Fire Protection Association (NFPA). Licensed, by agreement, for individual use and download on October 4, 2014 to LEADER and READER for designated user PATTARAPORN SRITRAKOOL. No other reproduction or transmission in any form permitted without written permission of NFPA. For inquires or to report unauthorized use, contact licensing@nfpa.org.

A.13.5.11.11.10(A) The removal of flammable special atmospheres by burn-out, purge-out, or emergency purge-out can be caused by manual or automatic action. Table A.13.5.11.11.10(A) summarizes when the action should be automatic and when it can be automatic or manual.

Table A.13.5.11.11.10(A) Burnout, Purge-out, and Emergency Purge-out Conditions and Responses

Part	Condition	Response
1	Normal furnace atmosphere burn-out initiated	Automatic or manual
2	Normal furnace atmosphere purge-out initiated	Automatic or manual
3	Low flow of carrier gas(es) that will not maintain a positive pressure in chambers below 1400°F (760°C) and positive pressure is not restored by the automatic transfer to another source of gas	Automatic
4	A furnace temperature below which any liquid carrier gas used will not reliably dissociate	Automatic
5	Automatic emergency inert gas purge initiated	Automatic
6	Manual operator emergency inert gas purge initiated	Automatic

Part 3 addresses the condition where there is a low flow of carrier gas that will not maintain positive pressure within a chamber that is below 1400°F (760°C). If a chamber is above 1400°F (760°C), the low flow condition might allow furnace pressure to drop and might allow air infiltration; however, while this might lead to process issues, it is not a safety issue requiring the removal of the special atmosphere. Following operating instructions, the operator can work to restore normal process conditions.

It should be noted that Part 3 does not involve any measurement of the actual furnace pressure. Rather, it is based on comparing the actual carrier gas(es) flow with minimum allowable design flow rates. The actual carrier gas flow is measured with flow sensors. Furnace pressure is subject to fluctuation due to actions such as operating doors and loading or unloading work. The inadvertent shutdown of carrier gases due to a routine furnace pressure fluctuation is considered more of a potential safety hazard than the actual pressure fluctuation itself.

A.13.5.11.11.11(B) Where exothermic generated special atmosphere gases are used for purging, the flammable content of the gas is maintained at a limited level that when mixed with air would not exceed 25 percent of LFL and therefore would not need a safety shutoff valve. See 13.5.5.1(D)(2) for further guidance on monitoring of purge gases for flammable components.

A.13.5.11.11.11(E) See A.7.4.9.

A.13.5.11.11.12(D) Normal shutdown of a furnace by burn-out is an example of a practice that causes a furnace chamber to lose positive pressure. However, this loss of positive pressure takes place along with the controlled introduction of air to effect the burn-out of the flammable atmosphere. Safety shutoff valves are to close in response to this action, but there is no safety issue with this intended case of furnace pressure loss.

The unintended interruption of a furnace heating system, unintended loss of furnace temperature, unintended reduction of carrier gas flow, or unintended interruption of power are examples of conditions that can cause furnace chambers to lose positive pressure. These conditions, however, can lead to the uncontrolled infiltration of air into furnace chambers, which could rapidly lead to an unsafe condition (faster than operators might be able to respond) in some of or all the chambers. Chamber temperature will influence whether an unsafe condition can develop.

Where chamber temperature is at or above 1400°F (760°C), the uncontrolled air infiltration could create process quality issues; however, it is not anticipated to create safety issues. This standard has no requirement to initiate the removal of the special atmosphere in this case. Instead, the operator should follow written operating instructions and work to restore normal process conditions. The written operating instructions could include directions to implement a controlled furnace shutdown if certain specified conditions develop.

Where chamber temperature is below 1400°F (760°C), the uncontrolled air infiltration could create an explosion hazard. Under these conditions, the safety shutoff valves for flammable special atmospheres will close, and the actions specified in 13.5.11.11.10(B)(1) should automatically occur.

Regarding A.13.5.11.11.12(D)(4), where a carrier gas generated by liquid dissociation is used, furnace temperatures need to be maintained above a temperature that will maintain reliable dissociation of the liquid. In earlier editions of NFPA 86, the minimum temperature was stated as 800°F (427°C). This specific value has been removed from the standard because there is more than one liquid used as a special atmosphere, and each liquid should be evaluated for the minimum temperature that will reliably dissociate that liquid in the furnace. Where a reliable dissociation temperature is not maintained, the special atmosphere liquid might no longer maintain a positive furnace pressure. Once positive furnace pressure is lost, air infiltration will be possible, and a furnace explosion hazard can develop.

A.13.5.11.11.15 Vestibule explosion relief means usually consist of doors that remain in position under their own weight but are otherwise unrestrained from moving away from the door opening if an overpressure occurs within the furnace.

A.13.5.11.11.16 Noncarrier special atmosphere gases can be flammable (e.g., enriching gas) or nonflammable (e.g., process air). Their introduction into the furnace should occur only after the carrier gases flow has been established. According to this standard, flammable special atmosphere gases are equipped with safety shutoff valves. Nonflammable special atmosphere gases typically are equipped with solenoid valves.

A.13.5.12 The following paragraphs provide additional information with regard to purge effectiveness.

Verifying Purge Effectiveness by Gas Analysis. Historically, gas analyses have been required to verify when a purge has satisfactorily diluted the oxygen or combustible gas inside a furnace. Accordingly, gas analyzing instruments are included among the protective equipment required to operate furnaces that employ flammable processing atmospheres. Verification is needed because of concerns about the efficacy of a purge due to the following:

(1) Difficulties in purging all parts of a furnace
(2) Purge not actually flowing into a furnace as intended

Copyright 2014 National Fire Protection Association (NFPA). Licensed, by agreement, for individual use and download on October 4, 2014 to LEADER and READER for designated user PATTARAPORN SRITRAKOOL. No other reproduction or transmission in any form permitted without written permission of NFPA. For inquires or to report unauthorized use, contact licensing@nfpa.org.

(3) Air leakage into a furnace through faulty seals around openings
(4) Air leaks into the purge gas piping
(5) Unreliable flow rate or timing measurements

Gas analysis has been the accepted method for verifying the effectiveness of a purge. Usually it is a measurement of oxygen or combustible gas concentration in the gas being exhausted from the furnace. Purge effluent gases from furnaces often contain condensed oil and water vapors, soot, and lubricant decomposition products. These materials can clog or accumulate inside sample collection tubing and cause misleading analysis results. They can foul or damage instrument sensors. Consequently, most analyses are manual spot checks made by an operator using portable instruments.

Manual analyses do not lend themselves to modern, automated atmosphere control systems. Instead, instruments that continuously analyze sample streams are preferred. Unfortunately, they suffer from the sample conditioning problems mentioned and often do not provide the reliability needed.

Timed Flow Purge Method. Measured dilution purging is also a dependable method for accomplishing a successful purge. Because its results are certain and accurately predictable, its effectiveness does not need to be verified by using gas analyzers, provided that the equipment, the purge gas, and the operating procedures are not altered when future purges are performed. Therefore, a standardized timed flow rate measurement can be relied on to perform without resorting to repetitive gas analyses during routine operations of the furnace.

Dilution Purging. In dilution purging, the diluent gas is added continuously to a furnace or vessel to lower the concentration of the component to be purged. The vent stream is also continuous. For example, air or the oxygen portion of air is purged out of a furnace using an oxygen-free purge gas. The greater the volume of purge gas used in relation to the volume of the purged vessel, the lower the resultant oxygen content. In most cases, the final oxygen concentration is independent of purge time duration. Rather, it is a function of the volume of the container and the total volume of nitrogen introduced.

Determining Gas Purge Requirements. Figure A.13.5.12 illustrates how the concentration of oxygen in an air-filled furnace drops as nitrogen is introduced (note vertical scale on the right beginning at 20.9 percent oxygen in air). Five furnace volume changes reduce the oxygen content to about 0.1 percent volume.

The vertical scale on the left of Figure A.13.5.12 can be used to predict how much nitrogen is needed to lower the concentration of combustible gases below desired limits. For example, to decrease the hydrogen content of a 10 percent H_2 gas mixture to less than 0.1 percent, five furnace volume changes are needed (seven volume changes minus two volume changes on the horizontal scale).

Limitations of Dilution Purging Technique. It is important to note that the dilution purge technique depends on uniform mixing of the atmosphere in the furnace or vessel during the purge period. This technique is not predictable if the gas circulation fans fail or if they are incapable of creating a homogeneous mixture throughout the furnace at the diluent flow rate used. Therefore, the time needed to conduct a dilution purge of a given furnace installation can be influenced by the purge gas flow rate. In a furnace equipped with a low capacity circulation fan, the purge gas flow rate might have to be limited to ensure that the diluent gas is dispersed effectively throughout the purged chamber as the purge proceeds. This is not likely to be a problem, provided the diluent flow rate is not radically higher than the normal atmosphere flow rate.

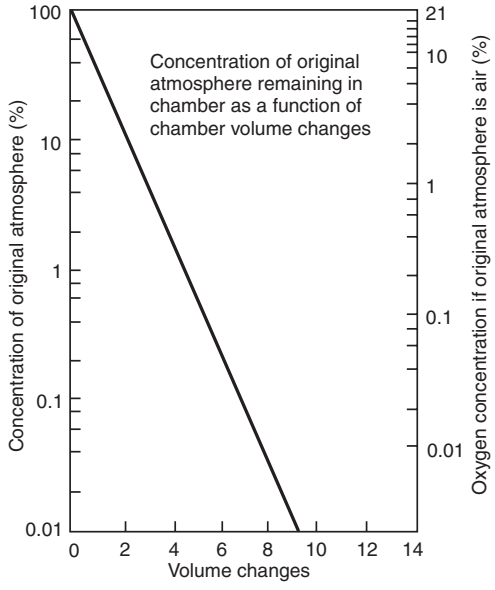

FIGURE A.13.5.12 Determining Purge Effectiveness.

Troubleshooting Faulty Purge Trials. If a dilution purging trial fails to duplicate the theoretical result predicted by Figure A.13.5.12, it is a sign that one or more of the following conditions exist:

(1) The gas flow or time measurement is faulty.
(2) The purge gas is contaminated with the gas being purged.
(3) The purge gas supplying the piping or the furnace has leaks and is aspirating air into the system.
(4) The atmosphere circulation within the furnace is inadequate.
(5) The purge gas is not flowing through the furnace.
(6) The gas analysis is faulty.

Inert gas purges are used for either of the following purposes:

(1) To remove oxygen (contained in air) from a furnace before introducing a flammable or indeterminate carrier gas
(2) To remove a flammable or indeterminate atmosphere from the furnace before it is opened to the air

Such purges are required to avoid creating explosive atmosphere–air mixtures inside the furnace when combustible gases are introduced or withdrawn or when a furnace is opened to the air.

A.13.5.12.1 Because purging without atmosphere circulation can leave pockets of combustible gases inside a furnace, the presence of a flammable gas might not be detectable by analyzing the vent gas. Further, timed flow purging is not reliable for determining when an inert purge is complete.

A.13.5.12.3 Examples of alterations that could reduce purge effectiveness include the following:

(1) Revised atmosphere inlet or vent piping
(2) Changes or replacements of atmosphere flow controls and metering equipment
(3) Revised operating procedures
(4) Changes to the furnace, atmosphere gas, or atmosphere process
(5) Maintenance or repairs on the furnace system, including entry doors and seals

Copyright 2014 National Fire Protection Association (NFPA). Licensed, by agreement, for individual use and download on October 4, 2014 to LEADER and READER for designated user PATTARAPORN SRITRAKOOL. No other reproduction or transmission in any form permitted without written permission of NFPA. For inquires or to report unauthorized use, contact licensing@nfpa.org.

A.13.5.13.1(A) The inner door serves as an insulated baffle to block heat loss to the quench vestibule.

A.13.5.13.3 The elevator's function is to immerse the work charge in the quench medium with minimum splashing. At termination of the timed quench cycle, the elevator is raised to the drain position at hearth level.

A.13.5.13.5(A) Smaller quench tanks also should be so protected, where practical.

A.13.5.13.5(D) Figure A.13.5.13.5(D) shows an example of overflow drains for open integral quench tanks.

A.13.5.13.5(E) Figure A.13.5.13.5(E) illustrates overflow drains for closed integral quench tanks.

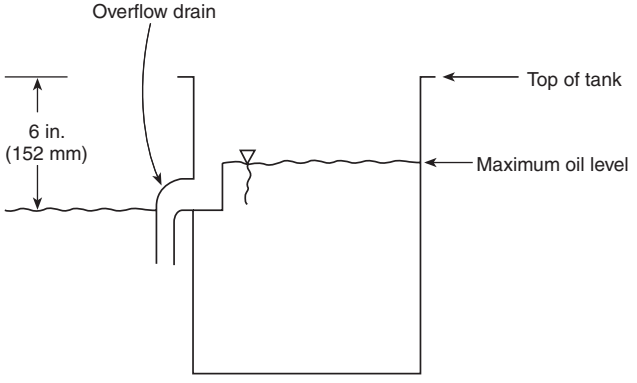

FIGURE A.13.5.13.5(D) Example of Overflow Drains for Open Integral Quench Tanks.

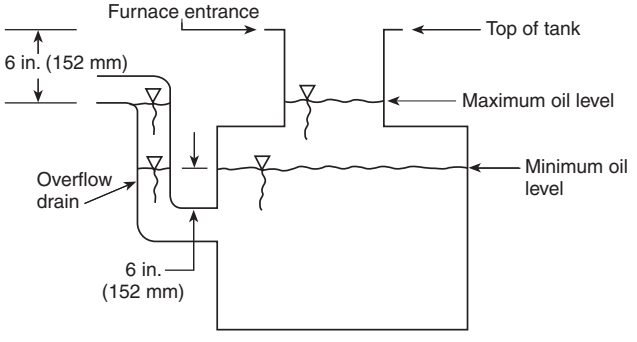

FIGURE A.13.5.13.5(E) Example of Overflow Drains for Closed Integral Quench Tanks.

A.13.5.13.6 Quench medium tanks generally utilize a cooling system that maintains the quench medium at an operating temperature that reduces the quantity of quench medium required. Three basic cooling systems are in general use and consist of the following:

(1) An internal cooler, where a heat transfer medium is circulated through a heat exchanger within the quench tank
(2) An external cooler, where a quench medium is withdrawn from a quench tank, circulated through a liquid-cooled heat exchanger, and returned
(3) An external cooler, where a quench medium is withdrawn from a quench tank, circulated through an air-cooled heat exchanger, and returned

A.13.5.13.7 Quench oil should be checked for water content wherever there is a possibility of water intrusion into the oil supply or oil systems. Typical situations include the following:

(1) The quench system was idle for a long period of time.
(2) The quench oil was transferred in temporary storage containers.
(3) A nearby sprinkler system was activated.
(4) The roof leaked.
(5) The water-oil heat exchanger leaked.

Bulk oil storage systems should be checked for water periodically. Quench oil that operates below 212°F (100°C) should be checked for water content periodically.

A.13.5.13.7.5(A) The hot plate laboratory method test consists of dropping a few drops of quench oil sample on a hot, flat, metal plate with a temperature of 225°F to 275°F (107°C to 135°C). If the fluid snaps and spatters when it contacts the hot plate, water is present. If the oil becomes thin and smokes, no water is present. This method does not determine the percentage of water, only the presence of water. If a quantitative analysis is performed, the water content in the quench oil should not exceed 0.5 percent by volume.

A.13.5.13.7.5(B) The sampling procedure should consider the most likely location where water occurs. Water does not mix easily with quench oil, and water is heavier than oil. In some quench systems, the quench oil should be agitated, all pumps should be operated for a period of time, and the oil then should be left still for a time before the sample is removed from the lowest floor of the quench tank. In other quench systems, the quench oil should be well agitated and the sample removed from a turbulent region.

A.13.5.13.7.5(C) The following are examples of when contamination is a possibility:

(1) After a shutdown
(2) After a heat exchanger leak
(3) After any components in the oil-cooling, agitation, or recirculation system are replaced
(4) After a water-extinguished fire in the area
(5) After a significant addition of new or used oil

A.13.5.14 Fire is the principal hazard in oil quenching. When hot metal is quenched in oil, an envelope of vapors forms around the piece. Large vapor bubbles, which can have temperatures above auto-ignition temperature, rise to the surface and sometimes flash into flame momentarily. Additional localized surface flashing also occurs around the work as the metal enters the oil but is extinguished readily by normal agitation of the oil.

There are three general types of quench oil fires that can reach serious proportions in the absence of sprinkler protection. The first, most common type of fire occurs when the oil is at its normal temperature below the flash point. The red-hot work hangs up, partially submerged at the surface, heating the oil locally above its flash point. The fire develops slowly, and, if the work is promptly submerged or removed from the tank, it can be extinguished with portable extinguishing equipment or by agitating the oil.

The second type of fire occurs when the main body of oil is heated above the flash point because of failure or inadequacy of the tank's cooling system or introduction of an excessive workload. This type of fire reaches full intensity in only a few seconds and is very difficult to extinguish with portable equipment. Above 212°F (100°C), the heated oil turns water to

Copyright 2014 National Fire Protection Association (NFPA). Licensed, by agreement, for individual use and download on October 4, 2014 to LEADER and READER for designated user PATTARAPORN SRITRAKOOL. No other reproduction or transmission in any form permitted without written permission of NFPA. For inquires or to report unauthorized use, contact licensing@nfpa.org.

steam. When water is discharged on the fire, the tank can experience frothover. Fire spreads suddenly over the adjacent floor area, and fire fighters are forced back by intense heat and smoke. (Water spray discharged from sprinklers penetrates the oil surface less readily than the solid hose stream and, consequently, causes less violent frothover.)

The third and equally serious type of fire is caused by oil contacting the hot furnace as a result of any of the following:

(1) Overfilling the tank
(2) Splashing caused by the discharge from recirculation nozzles under conditions of low oil level
(3) Steam formation if water gets into the tank because of leakage from cooling coils and the temperature reaches 212°F (100°C), or if the hot work penetrates the water layer

In open tanks, formation of steam below the surface causes foaming and frothover. In enclosed tanks, pressure builds up and oil or flammable furnace atmosphere shoots out of openings. Intense burning can occur over a wide area.

Figure A.13.5.14 shows an example of an oil quench tank arrangement.

Protection requirements for open quench tanks are included in Chapter 13.

A.13.5.14.3.2(E) A dual–set point excess temperature limit switch arranged to actuate the alarm prior to the other operations can be used.

A.13.5.15 The potential hazards in the operation of molten salt bath furnaces can result in explosions, fires, or both, either inside the salt bath furnace or outside the furnace. Basic causes can be chemical or physical reactions or a combination.

Because molten salts have high heating potential, low viscosities, and relatively little surface tension, even minor physical disturbances to the molten salt bath can result in spattering or ejection of the molten salt out of the furnace container. This ejection can become violent when liquids (e.g., water, oil) or reactive materials are allowed to penetrate the surface of the salt bath.

Nitrate salts can produce violent explosions because of chemical chain reactions when the nitrate salt is overheated. Overheating can result from a malfunction of the heating system controls, a floating or "hung-up" workload, or an operator processing error.

While NFPA 86 deals primarily with the protection and conservation of property, salt bath explosions (chemical or physical) could involve injury to personnel. As a result, it is recommended that all aspects of personnel safety be investigated thoroughly.

A.13.5.15.2.2(A) Most salts are hygroscopic.

A.13.5.15.4.1 Fume hoods are necessary to remove and appropriately control the emission of heat and toxic (or otherwise deleterious) fumes.

A.13.5.15.6.1 See Figure A.13.5.15.6.1.

A.13.5.15.6.2(A) Free carbon or soot in contact with nitrate salt is hazardous.

A.13.5.15.6.2(D)(1) See Figure A.13.5.15.6.1.

A.13.5.15.6.2(D)(2) See Figure A.13.5.15.6.1.

A.13.5.15.6.3(A) Free carbon or soot in contact with nitrate salt is hazardous.

A.13.5.15.8 Because of the potential for the spattering of the molten salts, it is recommended that consideration be given to the provision of heat-resistant clothing, safety glasses or goggles, full faceshields, heat-resistant gloves, safety shoes, and all other personnel protection recommended by the equipment manufacturer, user standards, industrial safety standards, and local, state, or federal requirements.

A.13.5.15.9.2 In deep, pot-type, molten salt equipment, provisions should be made for keeping the upper burners fired until the salt is melted before firing the bottom burner. In shallow, pot-type, molten salt equipment, a solid rod or open cylinder tube should be placed in the pot when the pot is not being used in order to conduct heat from the bottom of the pot. This provision makes an opening in the crust and avoids eruptions.

A.14.2.2.1 Vacuum gauges might contain controlling devices to operate equipment sequentially.

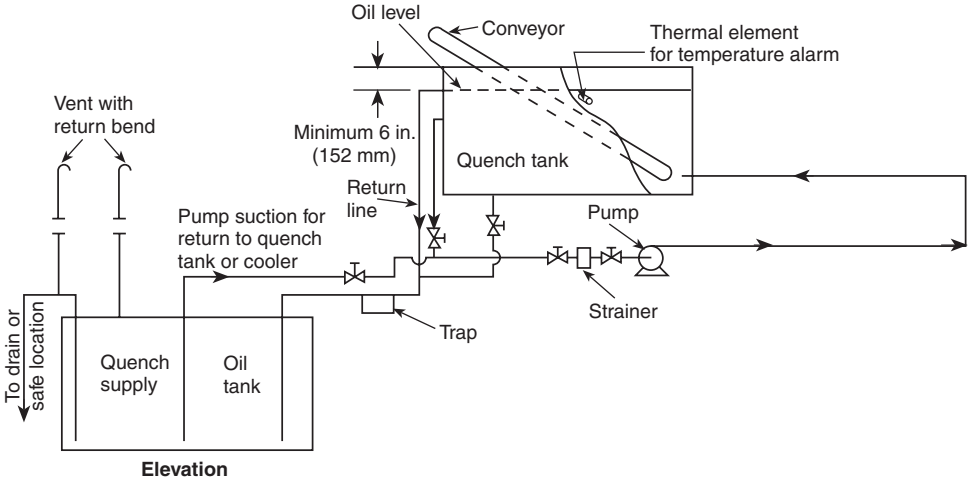

FIGURE A.13.5.14 An Example of Oil Quench Tank Arrangement.

Copyright 2014 National Fire Protection Association (NFPA). Licensed, by agreement, for individual use and download on October 4, 2014 to LEADER and READER for designated user PATTARAPORN SRITRAKOOL. No other reproduction or transmission in any form permitted without written permission of NFPA. For inquires or to report unauthorized use, contact licensing@nfpa.org.

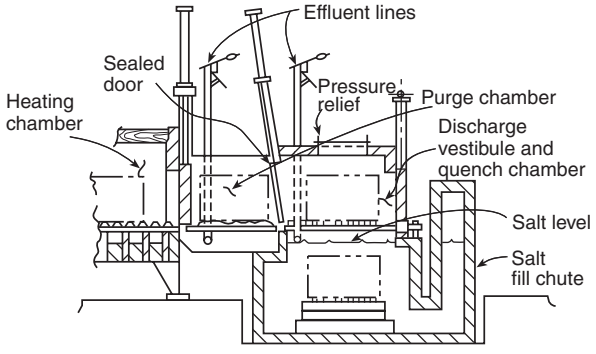

Type SI dunk-type elevator quench

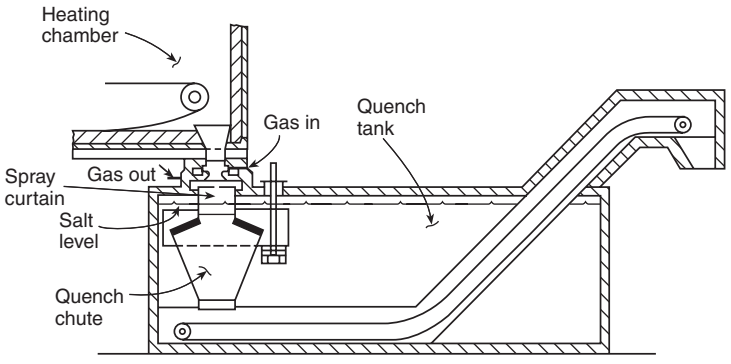

Type SIII bottom chute–type quench

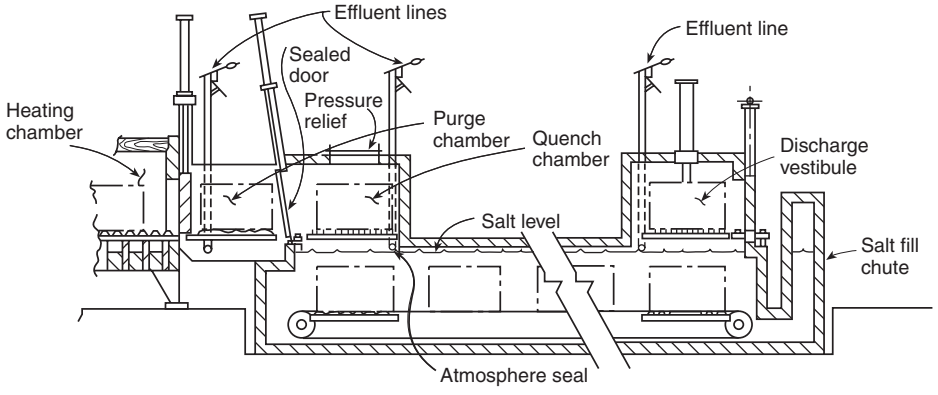

Type SII dunk-type elevator quench with under-salt transfer

FIGURE A.13.5.15.6.1 Examples of Integral Quench Tanks.

A.14.2.4.2 The furnace cooling system can include a vessel cooling system and one or more methods for cooling material in process. The systems might include gas quenching, oil quenching, or water quenching. Internal or external heat exchangers are permitted to be used and generally require supplementary cooling. Special atmospheres might be used for cooling.

A.14.2.4.4 Consideration should be given to the provision of flow indicators or temperature gauges on exit cooling lines.

A.14.2.5 After the thermal cycle has been completed, the workload either is transferred to a gas quenching vestibule or is gas-quenched in the heating zone. Gas quenching is performed by the introduction of a cooling gas (usually nitrogen, hydrogen, argon, or helium) until the pressure reaches a predetermined level [usually from a gauge pressure of 2 psi (13.8 kPa) (82.7 kPa) to a gauge pressure of 12 psi above atmospheric] and by recirculating the cooling gas through a heat exchanger and over the work by means of a fan or blower. The heat exchanger and fans or blower are either internal (within the furnace vacuum chamber) or external (outside the furnace vacuum chamber).

A.14.2.6 See Annex I for general pump information.

A.14.2.6.1 Vacuum pumps can be the ejector, liquid ring, mechanical, cryopump, or diffusion type.

A.14.2.6.3 It is recommended that diffusion pumps be charged with a vacuum grade of silicon-based fluid to reduce the risk of explosion on inadvertent exposure to air when heated. Diffusion pump fluids with equivalent or superior fire resistance should be considered.

A.14.2.9.1 Suitable materials generally include graphite, molybdenum, tantalum, tungsten, and others.

A.14.2.9.4 Where dissimilar metals are heated in contact with each other, particularly where they are oxide-free and used within a vacuum furnace, they can react and form alloys or a eutectic. The result is an alloy that melts at a considerably lower temperature than the melting point of either base metal.

Critical melting temperatures of some eutectic-forming materials are listed in Table A.14.2.9.4. Operating temperatures near or above these points should be considered carefully.

Table A.14.2.9.4 Eutectic Melting Temperatures

Material	Melting Temperature	
	°F	°C
Molybdenum-nickel	2310	1266
Molybdenum-titanium	2210	1210
Molybdenum-carbon	2700	1482
Nickel-carbon	2310	1266
Nickel-tantalum	2450	1343
Nickel-titanium	1730	943

Copyright 2014 National Fire Protection Association (NFPA). Licensed, by agreement, for individual use and download on October 4, 2014 to LEADER and READER for designated user PATTARAPORN SRITRAKOOL. No other reproduction or transmission in any form permitted without written permission of NFPA. For inquires or to report unauthorized use, contact licensing@nfpa.org.

A.14.2.10 The heat energy produced by the heating elements transfers into the work principally by means of radiation and through the insulation or heat shields into the cooled walls of the vacuum vessel. The cooling medium is continually circulated through the walls of the vessel, maintaining a cold wall. Generally, water is used as the cooling medium.

A.14.2.10.1 Examples of proper insulation include graphite wool, alumina-silica fibers, and other materials.

A.14.2.10.3 Molybdenum, tantalum, tungsten, palladium, and 304/316 stainless steel are examples of acceptable metals to be used for heat shields.

A.14.2.10.4 Airborne material can block heat exchangers and cause vacuum valve seals to leak on furnaces that use forced gas quenching.

A.14.5.1.2 Monitoring pressure in the roughing line has no impact on furnace or personnel safety. However, monitoring pressure in the diffusion pump foreline is important to both equipment and personnel safety.

The calibration of all vacuum gauges should follow the standards specified by the American Vacuum Society.

Mechanical Gauges. The bellows and the diaphragm mechanical gauges operate on a differential between atmospheric and process pressure. They are compensated for atmospheric pressure changes and calibrated for absolute pressure units. They are not suited for high vacuum work, being limited to approximately 1 mm Hg (133 Pa) absolute. Readout is approximately linear except when calibrated in altitude units. Electrical output is available.

McLeod Gauge. For high vacuum work, the McLeod gauge is often used as a primary standard for the calibration of other, more easily used instruments. The gauge is limited to intermittent sampling rather than continuous use. It operates on the principle of compressing a large known volume (V_1) of gas at unknown system pressure (P_1) into a much smaller volume (V_2) at a known higher pressure (P_2), as derived from Boyle's law, at constant temperature. The gauge then is calibrated to read P_1.

Thermal Gauges. The operation of a thermal gauge is based on the theory that energy dissipated from a hot surface is proportional to the pressure of the surrounding gas. Some manufacturers produce thermal gauges that are subject to contamination by vaporized materials, and this issue should be discussed with the gauge manufacturer. The following are types of thermal gauges:

(1) *Thermocouple Gauge.* The thermocouple gauge contains a V-shaped filament with a small thermocouple attached to the point. At low absolute pressures, the cooling effect on the heated filament is proportional to the pressure of the surrounding gas. Therefore, the thermocouple electromagnetic field (emf) can be used to indicate pressure. To compensate for ambient temperature, an identical second unit is sealed in an evacuated tube. The differential output of the two thermocouples is proportional to the pressure.
(2) *Pirani Gauge.* The Pirani gauge employs a Wheatstone bridge circuit. This circuit balances the resistance of a tungsten filament sealed off in high vacuum against that of a tungsten filament that can lose heat to the gas being measured by means of conduction. In the Pirani gauge, the resistance of the filament, rather than its temperature, is used as an indication of pressure.
(3) *Bimetal Gauge.* A bimetallic spiral is heated by a stabilized power source. Any change of pressure causes a change of temperature and, therefore, a deflection of the spiral, which is linked to a pointer on a scale that indicates pressure.

Ionization Gauges. The two types of ionization gauges are the hot filament (hot cathode) gauge and the cold cathode (Phillips or discharge) gauge. Their principle of operation is based on the fact that collisions between molecules and electrons result in the formation of ions. The rate of ion formation varies directly with pressure. Measurement of the ion current can be translated into units of gas pressure. The two types of ionization gauges are as follows:

(1) *Hot Filament (Hot Cathode) Gauge.* This gauge is constructed like an electron tube. It has a tungsten filament surrounded by a coil grid, which in turn is surrounded by a collector plate. Electrons emitted from the heated filament are accelerated toward the positively charged coil grid. The accelerated electrons pass through the coil grid into the space between the grid and the negatively charged collector plate. Some electrons collide with gas molecules from the vacuum system to produce positive ions. The positive current is a function of the number of ions formed and therefore a measure of the pressure of the system. Ionization gauge–sensing elements are extremely delicate and should be handled carefully. Their filaments can burn out if accidentally exposed to pressures above 1×10^{-3} mm Hg (1.3×10^{-1} Pa) absolute. The advantages of this type of gauge are high sensitivity and the ability to measure extremely high vacuums.
(2) *Cold Cathode (Phillips or Discharge) Gauge.* A cold cathode gauge employs the principle of the measurement of an ion current produced by a discharge of high voltage. Electrons from the cathode of the sensing element are caused to spiral as they move across a magnetic field to the anode. With this spiraling, the electron mean-free path greatly exceeds the distance between electrodes. Therefore, the possibility of a collision with the gas molecules present is increased, producing greater sensitivity (due to greater ion current) and thus sustaining the cathode discharge at lower pressure (i.e., high vacuum).

The sensing elements are rugged and well suited to production applications where unskilled help might make filament burnout a problem.

A.14.5.1.4 Providing automatic valves would help prevent pump oil or air from passing through the system or causing damage to the furnace or load.

A.14.5.1.6 An example warning label reads as follows:

> **WARNING:** Do not open oil drain or fill plugs for service until pump heater is at room temperature. Otherwise, ignition of pump oil can occur with rapid expansion of gas, causing damage to the pump and furnace hot zone.

A.14.5.1.7.1 The formation of steam pockets can cause an explosion.

A.14.5.1.7.2 If the electron beam becomes fixed on one spot, burn-through of a water circuit could occur.

A.14.5.1.7.5 Accelerating voltages run as high as 100 kV and present a shock or X-ray hazard.

A.14.5.2.1 Integral liquid quench systems might be constructed within the furnace vacuum chamber or might be in quench vestibules separated from the heating portion of the chamber with a door or vacuum-tight valve. Semicontinuous furnaces employ valves on each end of the hot vacuum zone.

Copyright 2014 National Fire Protection Association (NFPA). Licensed, by agreement, for individual use and download on October 4, 2014 to LEADER and READER for designated user PATTARAPORN SRITRAKOOL. No other reproduction or transmission in any form permitted without written permission of NFPA. For inquires or to report unauthorized use, contact licensing@nfpa.org.

These furnaces might be divided into three separate chambers: a loading vestibule, a hot vacuum chamber, and a cooling vestibule. With this arrangement, cooling or pressurizing the hot vacuum chamber is not required for loading and unloading. Cooling vestibules are often equipped with elevators so that loads can be quenched by vacuum, gas, or oil.

A.14.5.2.2.2 Although carbon steel plate was been used for many years with water cooling, its use is no longer permitted, because corrosion is continuous and the extent of it is difficult to determine. In existing installations where carbon steel has been used with water-based coolants, the wall thickness should be tested periodically to determine the corrosion rate and predict the remaining life.

A.14.5.2.4.1 Quench medium tanks generally utilize a cooling system to maintain the quench medium at an operating temperature to reduce the quantity of quench media required. The three basic cooling systems in general use consist of the following:

(1) Internal cooler, where a heat transfer medium is circulated through a heat exchanger within the quench tank
(2) External cooler in which a quench medium is withdrawn from a quench tank, circulated through a water-cooled heat exchanger, and returned
(3) External cooler in which a quench medium is withdrawn from a quench tank, circulated through an air-cooled heat exchanger, and returned

A.14.5.2.4.2(B) Maximum working pressure should include allowance for vacuum conditions.

A.14.5.2.4.3(B) Maximum working pressure should include allowance for vacuum conditions.

A.14.5.2.6.11(A) The hot plate laboratory method test consists of dropping a few drops of quench oil sample on a hot, flat metal plate with a temperature of 225°F to 275°F (107°C to 135°C). If the fluid snaps and spatters when it contacts the hot plate, water is present. If the oil becomes thin and smokes, no water is present. This method does not determine the percentage of water, only the presence of water. If a quantitative analysis of the water is performed, the water content of the oil should not exceed 0.5 percent by volume.

A.14.5.2.6.11(B) The sampling procedure should consider the location where water is most likely to occur. Water does not mix easily with quench oil, and water is heavier than oil. In some quench systems, the quench oil should be agitated, all pumps should be operated for a period of time, and the oil then should be left still for a time before the sample is removed from the lowest floor of the quench tank. In other quench systems, the quench oil should be well agitated and the sample removed from a turbulent region.

A.14.5.2.6.11(C) The following are examples of when contamination is a possibility:

(1) After a shutdown
(2) After a heat exchanger leak
(3) After any components in the oil-cooling, agitation, or recirculation system are replaced
(4) After a water-extinguished fire in the area
(5) After a significant addition of new or used oil

A.14.5.3.1.6 If a residual amount of air is retained in an external chamber, the inadvertent opening of a valve to an external system in the presence of a flammable atmosphere could create an explosive mixture.

A.14.5.3.1.12 Cracking of a sight glass, which is not unusual, can admit air into the chamber or allow flammable gas to escape.

A.14.5.3.4 In case of electric power failure, all of the following systems could stop functioning:

(1) Heating system
(2) Flammable atmosphere gas system
(3) Vacuum pumping system

A.14.5.4 Storage systems should comply with the following NFPA standards:

(1) Liquefied petroleum gas systems should be in accordance with NFPA 58, *Liquefied Petroleum Gas Code*.
(2) Gas piping should be in accordance with NFPA 54, *National Fuel Gas Code*.
(3) Hydrogen storage systems should be in accordance with NFPA 55, *Compressed Gases and Cryogenic Fluids Code*.
(4) Oxygen storage systems shall be in accordance with NFPA 55.

Processing atmosphere gas storage systems not covered by an NFPA standard or code (e.g., anhydrous ammonia) should be installed in accordance with supplier requirements and all applicable local, state, and federal codes.

A.14.5.5.1.2 The bottom third of a water-cooled vessel of a vacuum induction melting furnace should be trace-cooled instead of jacketed in order to provide minimum water storage in the event of a melting crucible breakthrough. The bottom of the furnace chamber should be equipped with a separate cooling circuit that can be valved off in the event of a molten metal burn-through of the chamber. The quality of the cooling water should be considered to minimize plugging of the induction coil or coils and to minimize corrosion of or attack on all water-cooled components.

A.14.5.5.2 The purpose of the power supply is to transform the power line to a suitable voltage and current (and, where necessary, to convert from 60 Hz to another frequency) to energize the induction coil. Consideration should be given to furnishing the power supply with a means of proportioning control.

Generally, this is accomplished with a motor generator, an electronic oscillator, or silicon-controlled, solid-state converter units. In most cases, a dc control signal is provided for proportioning control. The design of the power supply is specific to the individual furnace and size.

The power supply can include a transformer (or a motor generator), capacitors with control switches as necessary, a control device such as a saturable core reactor, primary fuses or circuit breakers for electrical protection, and an electrical disconnect switch for service. A power controller is permitted to be used where necessary to accept a signal from the furnace temperature controller.

The power supply output voltage should be limited to a maximum of 80 volts for noninsulated induction coils in order to prevent electrical breakdown or internal furnace arcing. As the atmospheric pressure is reduced in the vacuum chamber, arcing voltage changes. This voltage change is a function of electrical spacing and pressure. This function is not linear but has a minimum value for most gases used as cooling or partial pressure media in vacuum furnaces. If the voltage stress and mean-free path relationship reaches a critical value, corona discharge and arcing commence as a result of the field emission of electrons. For insulated induction coils, the operating

Copyright 2014 National Fire Protection Association (NFPA). Licensed, by agreement, for individual use and download on October 4, 2014 to LEADER and READER for designated user PATTARAPORN SRITRAKOOL. No other reproduction or transmission in any form permitted without written permission of NFPA. For inquires or to report unauthorized use, contact licensing@nfpa.org.

voltage is permitted to be higher in accordance with the dielectric of the insulating media chosen by the designer.

Assuming the use of a three-phase power line, consideration should be given to providing balanced line currents across all three phases as a result of the induction coil load.

A.14.5.5.2.2 Components of the heating system include the vacuum chamber, power supply, and control cabinet but do not include induction coils.

A.14.5.5.2.3 The design of the induction coil generally is circular and wound from copper tubing, allowing water-cooling of the coil. The design of the induction coil should be considered carefully for proper match of impedance among the power supply, the coil, and the susceptor or workload.

The induction coil power terminal and vessel feed-through design should be considered for vacuum integrity and induction heating effects. Generally, the feed-through flange should be of electrically nonconductive material, and the power feed-through leads should be grouped in close proximity.

A.14.5.5.2.4 In the event of contact, electrical short circuits can result in major damage to the induction coil, charge, or furnace parts.

A.14.5.5.2.5 In many applications, the induction coil is thermally insulated from the susceptor or workload to prevent high temperature radiation or heat damage.

A.14.5.5.3.4 Separate indicator lights for malfunctions should be installed in the control circuit. Light circuits should be reset by separate push-button switches when the malfunction has been corrected.

Annex B Example of Class A Furnace Operational and Maintenance Checklist

This annex is not a part of the requirements of this NFPA document but is included for informational purposes only.

B.1 General. The recommendations in this annex are prepared for the maintenance of equipment. Different types of equipment need special attention. A preventive maintenance program, including adherence to the manufacturers' recommendations, should be established and followed. This program should establish a minimum maintenance schedule that includes inspection and action on the recommendations provided in the following paragraphs. An adequate supply of spare parts should be maintained, and inoperable equipment should be cleaned, repaired, or replaced, as required.

B.2 Visual Operational Checklist. The following operational checks should be performed:

(1) Check burners for ignition and combustion characteristics.
(2) Check pilots or igniters, or both, for main burner ignition.
(3) Check air–fuel ratios.
(4) Check operating temperature.
(5) Check sight drains or gauges, or both, for cooling water-flow and water temperature.
(6) Check that burners or pilots, or both, have adequate combustion air.
(7) Check the operation of ventilating equipment.

B.3 Regular Shift Checklist. The following operational checks should be performed at the start of every shift:

(1) Check the set point of control instrumentation.
(2) Check positions of hand valves, manual dampers, secondary air openings, and adjustable bypasses.
(3) Check blowers, fans, compressors, and pumps for unusual bearing noise and shaft vibration; if V-belt driven, check belt tension and belt fatigue.
(4) Perform lubrication in accordance with manufacturer's requirements.

B.4 Periodic Checklist. The following maintenance checklist should be completed at intervals based on manufacturers' recommendations and the requirements of the process:

(1) Inspect flame-sensing devices for condition, location, and cleanliness.
(2) Inspect thermocouples and lead wire for shorts and loose connections. A regular replacement program should be established for all control and safety thermocouples. The effective life of thermocouples varies, depending on the environment and the temperature, and these factors should be considered in setting up a replacement schedule.
(3) Check setting and operation of low and high temperature limit devices.
(4) Test visual or audible alarm systems, or both, for proper signals.
(5) Check igniters and verify proper gap.
(6) Check all pressure switches for proper pressure settings.
(7) Check control valves, dampers, and actuators for free, smooth action and adjustment.
(8) Test the interlock sequence of all safety equipment. If possible, the interlocks should be made to fail manually, verifying that the related equipment operates as specified by the manufacturer.
(9) Test the safety shutoff valves for operation and tightness of closure as specified by the manufacturer.
(10) Test the main fuel manual valves for operation and tightness of closure as specified by the manufacturer.
(11) Test the pressure switches for proper operation at set point.
(12) Visually inspect electrical switches, contacts, or controls for signs of arcing or contamination.
(13) Test instruments for proper response to thermocouple failure.
(14) Clean or replace the air blower filters.
(15) Clean the water, fuel, gas compressor, and pump strainers.
(16) Clean the fire-check screens and valve seats and test for freedom of valve movement.
(17) Inspect burners and pilots for proper operation, air–fuel ratio, plugging, or deterioration. Burner refractory parts should be examined to ensure good condition.
(18) Check all orifice plates, air–gas mixers, flow indicators, meters, gauges, and pressure indicators; if necessary, clean or repair them.
(19) Check the ignition cables and transformers.
(20) Check the operation of modulating controls.
(21) Check the integrity of and the interior of the equipment, ductwork, and ventilation systems for cleanliness and flow restrictions.
(22) Test pressure relief valves; if necessary, repair or replace.
(23) Inspect air, water, fuel, and impulse piping for leaks.
(24) Inspect radiant tubes and heat exchanger tubes for leakage and repair if necessary.
(25) Lubricate the instrumentation, valve motors, valves, blowers, compressors, pumps, and other components.
(26) Test and recalibrate instrumentation in accordance with the manufacturers' recommendations.

Copyright 2014 National Fire Protection Association (NFPA). Licensed, by agreement, for individual use and download on October 4, 2014 to LEADER and READER for designated user PATTARAPORN SRITRAKOOL. No other reproduction or transmission in any form permitted without written permission of NFPA. For inquires or to report unauthorized use, contact licensing@nfpa.org.

(27) Test flame safeguard units. Make a complete shutdown and restart to check the components for proper operation.
(28) Check electric heating elements for contamination, distortion, cracked or broken refractory element supports, and proper position. Repair or replace if grounding or shorting can occur.
(29) Check electric heating element terminals for tightness.

Annex C Example of Class A or Class B Furnace Operational and Maintenance Checklist

This annex is not a part of the requirements of this NFPA document but is included for informational purposes only.

C.1 General. The recommendations in this annex are prepared for the maintenance of equipment. Different types of equipment need special attention. A preventive maintenance program, including adherence to the manufacturers' recommendations, should be established and followed. This program should establish a minimum maintenance schedule that includes inspection and action on the recommendations provided in the following paragraphs. An adequate supply of spare parts should be maintained, and inoperable equipment should be cleaned, repaired, or replaced, as required.

C.2 Visual Operational Checklist. The following operational checks should be performed:

(1) Check burners for ignition and combustion characteristics.
(2) Check pilots or igniters, or both, for main burner ignition.
(3) Check air–fuel ratios.
(4) Check operating temperatures.
(5) Check sight drains or gauges, or both, for cooling waterflow and water temperature.
(6) Check that burners or pilots, or both, have adequate combustion air.
(7) Check the operation of ventilating equipment.

C.3 Regular Shift Checklist. The following operational checks should be performed at the start of every shift:

(1) Check the set point of control instrumentation.
(2) Check positions of hand valves, manual dampers, secondary air openings, and adjustable bypasses.
(3) Check blowers, fans, compressors, and pumps for unusual bearing noise and shaft vibration; if V-belt driven, check belt tension and belt fatigue.
(4) Perform lubrication in accordance with manufacturer's requirements.

C.4 Periodic Checklist. The following maintenance checklist should be completed at intervals based on the recommendations of the manufacturer and the requirements of the process:

(1) Inspect flame-sensing devices for condition, location, and cleanliness.
(2) Inspect thermocouples and lead wire for shorts and loose connections. A regular replacement program should be established for all control and safety thermocouples. The effective life of thermocouples varies, depending on the environment and the temperature, and these factors should be considered in setting up a replacement schedule.
(3) Check setting and operation of low and high temperature limit devices.
(4) Test visual or audible alarm systems, or both, for proper signals.
(5) Check igniters and verify proper gap.
(6) Check all pressure switches for proper pressure settings.
(7) Check control valves, dampers, and actuators for free, smooth action and adjustment.
(8) Test the interlock sequence of all safety equipment. If possible, the interlocks should be made to fail manually, verifying that the related equipment operates as specified by the manufacturer.
(9) Test the safety shutoff valves for operation and tightness of closure as specified by the manufacturer.
(10) Test the main fuel manual valves for operation and tightness of closure as specified by the manufacturer.
(11) Test the pressure switches for proper operation at set point.
(12) Visually inspect electrical switches, contacts, or controls for signs of arcing or contamination.
(13) Test instruments for proper response to thermocouple failure.
(14) Clean or replace the air blower filters.
(15) Clean the water, fuel, gas compressor, and pump strainers.
(16) Clean the fire-check screens and valve seats and test for freedom of valve movement.
(17) Inspect burners and pilots for proper operation, air–fuel ratio, plugging, or deterioration. Burner refractory parts should be examined to ensure good condition.
(18) Check all orifice plates, air–gas mixers, flow indicators, meters, gauges, and pressure indicators; if necessary, clean or repair them.
(19) Check the ignition cables and transformers.
(20) Check the operation of modulating controls.
(21) Check the integrity of and the interior of the equipment, ductwork, and ventilation systems for cleanliness and flow restrictions.
(22) Test pressure relief valves; if necessary, repair or replace.
(23) Inspect air, water, fuel, and impulse piping for leaks.
(24) Inspect radiant tubes and heat exchanger tubes for leakage and repair if necessary.
(25) Lubricate the instrumentation, valve motors, valves, blowers, compressors, pumps, and other components.
(26) Test and recalibrate instrumentation in accordance with manufacturer's recommendations.
(27) Test flame safeguard units. A complete shutdown and restart should be made to check the components for proper operation.
(28) Check electric heating elements for contamination, distortion, cracked or broken refractory element supports, and proper position. Repair or replace if grounding or shorting can occur.
(29) Check electric heating element terminals for tightness.

Annex D The Lower Limit of Flammability and the Autogenous Ignition Temperature of Certain Common Solvent Vapors Encountered in Ovens

This annex is not a part of the requirements of this NFPA document but is included for informational purposes only.

D.1 Abstract of UL Bulletin of Research No. 43. The following is an abstract of UL Bulletin of Research No. 43, "The Lower Limit of Flammability and the Autogenous Ignition Temperature of Certain Common Solvent Vapors Encountered in Ovens."

Copyright 2014 National Fire Protection Association (NFPA). Licensed, by agreement, for individual use and download on October 4, 2014 to LEADER and READER for designated user PATTARAPORN SRITRAKOOL. No other reproduction or transmission in any form permitted without written permission of NFPA. For inquires or to report unauthorized use, contact licensing@nfpa.org.

This UL Bulletin of Research No. 43 reports an investigation conducted by Underwriters Laboratories Inc. to determine the lower limit of flammability (upward propagation) and the autogenous ignition temperature of certain common solvent vapors encountered in industrial ovens. The solvents included acetone, iso-amyl acetate, benzene, normal butyl alcohol, cyclohexane, cyclohexanone, meta or para cresol, ethyl alcohol, ethyl lactate, gasoline, normal hexane, high solvency petroleum naphtha, methyl alcohol, methyl ethyl ketone, methyl lactate, No. 10 Mineral Spirits, toluene, turpentine, and VM and P naphtha.

The lower limits of flammability of the solvent vapors in air at initial temperatures encountered in the operation of ovens were determined in a specially designed, electrically heated, closed explosion vessel of steel having a capacity of 1 ft^3 (0.028 m^3) [15¼ in. (387 mm) high, 12 in. (305 mm) internal diameter]. It was equipped with an observation window, an externally driven mixing fan, and inlet and outlet valves. A transformer rated 15,000 V, 60 mA, 60 cycles for the secondary and having a 0.009 mfd condenser connected across the secondary was used to produce an electric discharge for ignition.

The lower limits of flammability of all solvents included in this investigation were found to be lowered on increasing the initial ambient temperature, these changes in the lower limits being of such magnitude that they cannot be safely neglected in practical calculations of the amount of ventilation required to prevent formation of hazardous concentrations of the vapors of the solvents in industrial ovens. The magnitude of the change in the lower limit with a given increase in initial temperature varied with the different solvents.

The autogenous ignition temperature (in air) of the solvent vapors was determined in combustion chambers of iron, stainless steel (AISI Type No. 302), copper, zinc, and yellow brass, representing metals commonly used in oven construction. Determinations in glass and quartz chambers were included for comparison. The autogenous ignition temperature of the solvents is influenced to some extent by catalytic or other reactions of the solvent vapor–air mixtures with the heated metals or their oxides. Whether the ignition temperature of the solvent is increased or decreased (as compared with values obtained with glass or quartz combustion chambers) depends on the particular combinations of solvent vapor and metals.

The ignition temperatures of solvents in metal chambers were higher, for the most part, than the ignition temperatures of the same solvents in glass or quartz chambers, but exceptions were found where the values obtained in the metal chambers were lower (i.e., butyl alcohol in copper and brass chambers). The autogenous ignition temperature of many solvents included in the investigation is within the range of temperatures encountered in industrial ovens and, if conditions are such as to allow formation of flammable vapor–air mixtures in the oven, autogenous ignition can occur.

NOTE: In calculating ventilation requirements for batch ovens operating from 250°F to 500°F (121°C to 260°C), values for the lower flammable limit of the solvent determined at the operating temperature of the oven should be used where such data are available. However, where the data are obtainable only for room temperature, a correction factor is required. An averaged factor of 1.4 has been obtained from a graph of the experimental data plotted for a number of selected solvents over temperature ranges of 70°F to 250°F (21°C to 121°C) (1.25) and 250°F to 500°F (121°C to 260°C) (1.56).

Annex E Continuous Solvent Vapor Concentration Indicator and Controller

This annex is not a part of the requirements of this NFPA document but is included for informational purposes only.

E.1 Solvent Vapor Analyzer Systems. A solvent vapor concentration indicator is a measurement system that determines the solvent vapor concentration in a Class A oven, expressed as a percentage of the lower flammable limit (LFL), also called the lower explosive limit (LEL). It is required for safe operation of ovens at solvent concentrations above 25 percent LFL. The measurement system consists of three integral parts, as follows:

(1) The gas sample system that delivers the oven atmosphere sample to the analyzer
(2) The solvent vapor concentration analyzer
(3) The safety logic system that is activated by the analyzer

The oven atmosphere should be sampled at a point that best represents the average concentration of solvent vapor in the oven or oven zone. This usually is at the oven exhaust point. Care should be taken to provide sufficient turbulence within the oven to avoid significant pockets of high solvent concentration. The sample system consists of a sample pickup tube, sample line, sample pump, and filter or other sample conditioning devices. The volume of the sample system should be as small as possible, and the sample flow rate should be maximized for fast response of the system. Special precautions, such as heating the sample lines and analyzer to prevent condensation of volatiles in the sample system, might be required. The length of the sample line should be minimized by locating the analyzer close to the sample point.

The solvent vapor concentration analyzer can be one of several types. The choice of the appropriate type depends on factors such as the solvent composition, the need for calibration of more than one solvent, the necessary response time of the measurement system, and the ability to handle factors such as contaminants and oxygen content. The types of analyzers used are described as follows:

(1) *Catalytic Combustion.* Combustion of solvent vapor occurs on a heated catalyst surface, such as a platinum wire. The heat of combustion causes a change in electrical resistance, which is calibrated in terms of percent LFL. Because the measurement is based on combustion, the calibration does vary significantly for different solvents. However, contamination of the catalyst with silicones can cause a calibration shift.
(2) *Infrared.* The sample is passed through a measurement cell where infrared energy is absorbed by the solvent vapor and compared with the energy absorbed in a reference cell containing background gas. Contamination by silicone is not a problem with this type of analyzer, but the calibration is specific to certain classes of solvents and varies considerably for various solvent types. Its area of application is for single solvent systems where silicone poisoning might be a problem.
(3) *Flame Temperature.* This is a combustion-type analyzer in which solvent vapor in the sample is burned as it passes through a chamber containing a small, constantly burning flame. A temperature sensor is located immediately above the flame. The temperature varies with the amount of solvent burned in the flame and is calibrated in percent LFL. Contamination by silicones is not a problem, and calibration is relatively constant for various solvents.
(4) *Flame Ionization.* Ionization of solvent vapor in contact with a hydrogen flame causes a change in electrical properties that

Copyright 2014 National Fire Protection Association (NFPA). Licensed, by agreement, for individual use and download on October 4, 2014 to LEADER and READER for designated user PATTARAPORN SRITRAKOOL. No other reproduction or transmission in any form permitted without written permission of NFPA. For inquires or to report unauthorized use, contact licensing@nfpa.org.

is measured and calibrated in percent LFL. This method also is used to measure very low concentrations of solvent vapor. Very rapid response could be obtained, but the calibration varies for some types of solvents.

All of the various types of analyzers are to be routinely calibrated using zero and span gas. Standards require initial calibration for the specific solvents being measured.

The safety logic system involves high limit contacts in the analyzer or recorder, or both, that stop the conveyor or other means of solvent introduction and actuate dampers or fan motor drives to provide maximum makeup air and exhaust. Other parts of the analyzer logic system include flowmeters and pressure switches to verify the proper operation of the sample system. The solvent vapor concentration analyzer also can be utilized to control the percent LFL in the oven by modulation of the makeup air or exhaust.

It cannot be emphasized too strongly that the solvent vapor concentration measurement system is to have a very fast response time so that corrective action will be taken in response to upsets such as excessive introduction of solvent into the oven. A response time of as little as 5 seconds might be required in some cases.

E.2 LFL Values and Calibration Concerns. Proper operation of a continuous solvent vapor concentration analyzer requires careful calibration for the correct LFL values of the particular solvent or solvent mixtures and for response of the analyzer to the particular solvents.

E.2.1 LFL Values and Temperature Corrections. LFL values for many commonly used solvents are given in Table A.11.6.8.4(a) and Table A.11.6.8.4(b). Additional data can be found in NFPA 325, *Fire-Hazard Properties of Flammable Liquids, Gases and Volatile Solids*. (Note: Although NFPA 325 has been officially withdrawn from the *National Fire Codes*, the information is still available in NFPA's *Fire Protection Guide to Hazardous Materials*.)

For mixtures of solvents, the LFL of the mixture is calculated by the following formula:

$$\text{LFL mixture} = \frac{100}{(P_1/L_1)+(P_2/L_2)+\cdots(P_n/L_n)} \quad \textbf{[E.2.1]}$$

where:
$P_{1, 2, \ldots, n}$ = % by volume of component 1, 2, ..., n
$L_{1, 2, \ldots, n}$ = LFL value of each solvent

E.2.2 Instrument Calibration Factors. The solvent vapor analyzer systems described in Section E.1 respond differently to various solvent vapors. Instrument calibration to the specific solvent vapor or solvent mixture vapor is required both before initial operation of the instrument and on some routine schedule after initial operation.

E.2.2.1 Initial Calibration. The instrument should be calibrated initially with the solvent vapor or solvent mixture vapor used in the oven application. A label describing this calibration should be affixed to the instrument. A permanent record of this calibration should be included with records for the instrument.

The user should understand how the instrument responds to vapors for which the instrument is not calibrated, including other solvent vapors or mixtures of solvent vapors present in the sample and vapors whose relative response data are not known. The instrument manufacturer should be consulted for guidance in such cases.

The initial calibration should be based on worst-case considerations, including the following:

(1) If a variety or mixture of solvent vapors is to be present, the instrument should be calibrated for the solvent vapor that produces the lowest instrument signal. All other solvent vapors should indicate a meter value greater than the actual concentration, so that any error in reading is always in a safe or early warning direction.
(2) Solvent mixtures containing minor components can be calibrated without the minor components where the estimated error produced is less than 3 percent of the meter reading.
(3) When calculating the LFL value and oven temperature correction as provided in Table 11.6.8.3(A), the maximum oven temperature should be used.

E.2.2.2 Field Calibration. Solvent vapor analyzer systems require field calibration checks during normal operation to verify the accuracy of the system. The manufacturer should supply the user with a recommended schedule for calibration checks. This schedule should be contained in the operating instructions for the specific instrument used.

It is recommended that field calibrations be made using a known concentration of the actual solvent vapor present in the process.

Field calibration also can be performed using a known concentration of reference test gas in situations where use of the actual solvent vapor present is not possible. This reference test gas could be used as a substitute for the actual solvent vapor, and meter reading adjustments can be made based on test gas response data supplied by the instrument manufacturer.

The use of relative response data in making field calibration checks is not recommended.

Certain materials, including but not limited to silicones, sulfur compounds, phosphorus compounds, chlorinated compounds, and halogenated hydrocarbons, have a poisoning or inhibiting effect on some solvent vapor analyzers. These materials produce a loss in sensitivity in certain instruments. If the presence of desensitizing materials in the sample is known or suspected, instrument field calibration checks should be performed on a more frequent basis. The instrument manufacturer should be consulted for guidance on calibration frequency in these situations.

Annex F Steam Extinguishing Systems

This annex is not a part of the requirements of this NFPA document but is included for informational purposes only.

F.1 General. Steam extinguishes fire by the exclusion of air or the reduction of the oxygen content of the atmosphere in a manner similar to that of carbon dioxide or other inert gases. The use of steam precedes other modern smothering systems. Steam is not a practical extinguishing agent except where a large steam supply is continuously available. The possible burn hazard should be considered in any steam extinguishing installation. A visible cloud of condensed vapor, popularly described as steam, is incapable of extinguishment.

Although many fires have been extinguished by steam, its use often has been unsuccessful due to lack of understanding of its limitations. Except for specialized applications, other types of smothering systems are preferred in modern practice. No complete standard covering steam smothering systems has yet been developed.

Copyright 2014 National Fire Protection Association (NFPA). Licensed, by agreement, for individual use and download on October 4, 2014 to LEADER and READER for designated user PATTARAPORN SRITRAKOOL. No other reproduction or transmission in any form permitted without written permission of NFPA. For inquires or to report unauthorized use, contact licensing@nfpa.org.

One pound of saturated steam at 212°F (100°C) and normal atmospheric pressure has a volume of 26.75 ft^3 (0.76 m^3). A larger percentage of steam is required to prevent combustion than in the case of other inert gases used for fire extinguishment. Fires in substances that form glowing coals are difficult to extinguish with steam, owing to the lack of cooling effect. For some types of fire, such as fires involving ammonium nitrate and similar oxidizing materials, steam is completely ineffective.

Steam smothering systems should be permitted only where oven temperatures exceed 225°F (107°C) and where large supplies of steam are available at all times while the oven is in operation. Complete standards paralleling those for other extinguishing agents have not been developed for the use of steam as an extinguishing agent, and, until this is done, the use of this form of protection is not as dependable, nor are the results as certain, as those provided by water, carbon dioxide, dry chemical, or foam.

Release devices for steam smothering systems should be manual, and controls should be arranged to close down oven outlets to the extent practicable.

F.2 Life Hazard.

F.2.1 Equipment should be arranged to prevent operating of steam valves when doors of box-type ovens or access doors or panels of conveyor ovens are open.

F.2.2 A separate outside steam manual shutoff valve should be provided for closing off the steam supply during oven cleaning. The valve should be locked closed whenever employees are in the oven.

F.2.3 The main valve should be designed to open slowly, because the release should first open a small bypass to allow time for employees in the vicinity to escape and also to protect the piping from severe water hammer. A steam trap should be connected to the steam supply near the main valve to keep this line free of condensate.

F.3 Steam Outlets. If steam is used, steam outlets should be sufficiently large to supply 8 lb/min (3.6 kg/min) of steam for each 100 ft^3 (2.8 m^3) of oven volume. The outlets preferably should be located near the bottom of the oven, but if the oven is not over 20 ft (6.1 m) high, they might be located near the top, pointing downward. Steam jets should be directed at dip tanks (in a manner to avoid disturbing the liquid surface) or other areas of special hazard.

Annex G Example of Class C Furnace Operational and Maintenance Checklist

This annex is not a part of the requirements of this NFPA document but is included for informational purposes only.

G.1 Visual Operational Checklist. The following operational checks should be performed:

(1) Check burners for ignition and combustion characteristics.
(2) Check pilots or igniters, or both, for main burner ignition.
(3) Check air–fuel ratios.
(4) Check operating temperatures.
(5) Check sight drains or gauges, or both, for cooling waterflow and water temperature.
(6) Check that burners or pilots, or both, have adequate combustion air.
(7) Check the operation of ventilating equipment.

G.2 Regular Shift Checklist. The following regular shift checks should be performed:

(1) Take the necessary gas analyses; if automatic gas analyzers are used, the manual and automatic readings should coincide. Recalibrate automatic gas analyzers.
(2) Check the set point of control instrumentation.
(3) Check positions of hand valves, manual dampers, secondary air openings, and adjustable bypasses.
(4) Check blowers, fans, compressors, and pumps for unusual bearing noise and shaft vibration; if they are V-belt driven, check belt tension and belt fatigue.
(5) Perform lubrication in accordance with manufacturer's requirements.

G.3 Weekly Checklist. The following weekly checks should be performed:

(1) Inspect flame-sensing devices for condition, location, and cleanliness.
(2) Inspect thermocouples and lead wire for shorts and loose connections.
(3) Check setting and operation of low and high temperature limit devices.
(4) Test visual or audible alarm systems, or both, for proper signals.
(5) Check igniters and verify proper gap.
(6) Check all pressure switches for proper pressure settings.
(7) Check control valves, dampers, and actuators for free, smooth action and adjustment.

G.4 Periodic Checklist. The following maintenance checklist should be completed at intervals based on the recommendations of the manufacturer and the requirements of the process:

(1) Test the interlock sequence of all safety equipment. If possible, the interlocks should be made to fail manually, verifying that the related equipment operates as specified by the manufacturer.
(2) Test the safety shutoff valves for tightness of closure as specified by the manufacturer.
(3) Test the main fuel manual valves for operation.
(4) Test the pressure switches for proper operation.
(5) Visually inspect electrical switches, contacts, or controls for signs of arcing or contamination.
(6) Test instruments for proper response to thermocouple failure.
(7) Verify the results of a timed purge procedure, if used.
(8) Clean the air blower filters.
(9) Clean the water, gas compressor, and pump strainers.
(10) Clean the fire-check screens and valve seats and test for freedom of valve movement.
(11) Inspect burners and pilots; if necessary, clean them.
(12) Check orifice plates, air–gas mixers, flow indicators, meters, gauges, and pressure indicators; if necessary, clean or repair them.
(13) Check the ignition cables and transformers.
(14) Check the operation of modulating controls.
(15) Check the interior of the equipment, ductwork, and ventilation systems for cleanliness and flow restrictions.
(16) Test pressure-relief valves; if necessary, clean or replace them.
(17) Inspect air, water, fuel, and impulse piping for leaks.

Copyright 2014 National Fire Protection Association (NFPA). Licensed, by agreement, for individual use and download on October 4, 2014 to LEADER and READER for designated user PATTARAPORN SRITRAKOOL. No other reproduction or transmission in any form permitted without written permission of NFPA. For inquires or to report unauthorized use, contact licensing@nfpa.org.

(18) Inspect radiant tubes and heat exchanger tubes for leakage; if necessary, repair them.
(19) Lubricate the instrumentation, valve motors, valves, blowers, compressors, pumps, and other components.
(20) Test instrumentation in accordance with manufacturers' recommendations.
(21) Test flame safeguard units.

G.5 Maintenance of Gas Equipment.

G.5.1 General. These recommendations are prepared for maintenance of gas equipment. Special types of equipment need special attention. A preventive maintenance program that includes adherence to the manufacturers' recommendations should be established and followed. This program should establish a minimum maintenance schedule that includes inspection and action on the recommendations provided in G.5.2 through G.5.5. An adequate supply of spare parts should be maintained.

G.5.2 Burners and Pilots. Burners and pilots should be kept clean and in proper operating condition. Burner refractory parts should be examined at frequent, regular intervals to ensure good condition.

G.5.3 Flame Safeguard Equipment. Where automatic flame safeguards are used, a complete shutdown and restart should be made at frequent intervals to check the components for proper operation.

G.5.4 Other Safeguard Equipment. Accessory safeguard equipment — such as manual reset valves, automatic safety shutoff valves, pressure or vacuum switches, high temperature limit switches, draft control, manual shutoff valves, airflow switches, door switches, and gas valves — should be operated at frequent, regular intervals to ensure proper functioning. If inoperative, they should be repaired or replaced promptly.

Where fire checks are installed in air–gas mixture piping, the pressure loss across the fire checks should be measured at regular intervals. Where excessive pressure loss is found, screens should be removed and cleaned. Water-type backfire checks should be inspected at frequent intervals, and the liquid level should be maintained.

G.5.5 Safety Shutoff Valves. All safety shutoff valves should be checked for leakage and proper operation at frequent, regular intervals. An example procedure for testing gas safety shutoff valves is outlined in A.7.4.9.

G.6 Maintenance of Electric Furnaces and Equipment.

G.6.1 General. A program of regular inspection and maintenance of electric furnaces is essential to the safe operation of that equipment. Manufacturer's recommendations should be followed rigorously, resulting in a long, trouble-free furnace life. Suitable spare parts should be stocked to ensure quick replacement as needed.

G.6.2 Heating Elements. The heating elements should be inspected at regular intervals and any foreign contamination removed. Repair is essential if elements are dislodged or distorted, causing them to touch alloy hearths or furnace components so that grounding or shorting can occur. Element terminals should be checked periodically and tightened because loose connections cause arcing and oxidation that can result in burn-out of the terminal.

G.6.3 Insulation and Refractory Materials. Furnace linings need attention where protective atmospheres are used, to make certain that excessive carbon has not been deposited. Grounding or shorting of the elements can occur unless recommended burn-out procedures are followed. Cracked or broken refractory element supports should be replaced as necessary.

G.6.4 Thermocouples. A regular replacement program should be established for all control and safety thermocouples. The effective life of thermocouples varies, depending on the environment and the temperature, and these factors should be considered in setting up a replacement schedule.

G.6.5 Auxiliary and Control Devices. Contactors should be checked and replaced periodically where pitting due to arcing could result in welding of the contacts and uncontrolled application of power to the furnace. All control components, including pyrometers and relays, should be checked periodically to ensure proper operation or control accuracy. Instructions provided by the manufacturer of each control component should be followed with care.

G.6.6 Voltage. The voltage supplied to electric furnaces should be maintained within reasonable limits to ensure against overloading of control devices and transformers. Undervoltage can result in operational failure of relays and solenoid valves.

G.6.7 Water Cooling. If components are water cooled, it is important to check the flow and the temperature of the cooling water frequently.

G.6.8 Interlocks. Periodic checks of all safety interlocks are essential. High frequency generators should have functioning door interlocks to prevent operators from entering the enclosure while any power is on. These safety devices should be checked frequently.

Annex H Vacuum Furnace Maintenance Checklist

This annex is not a part of the requirements of this NFPA document but is included for informational purposes only.

H.1 General. A program of regular inspection and maintenance of the vacuum furnace is essential to the safe operation of the equipment and should be instituted and followed rigorously. Basic heating devices, such as heating elements or induction coils, should be designed for ease of maintenance. If special tools are needed, they should be supplied by the furnace manufacturer.

H.1.1 Vacuum System. Mechanical vacuum pumps should be checked and repaired as necessary. The following is a partial list:

(1) Check that drive belts are not worn.
(2) Verify that drive belt tension is proper.
(3) Check that no oil leaks are at the shaft seals.
(4) Check that the oil level is correct.
(5) Inspect the oil to ensure it is free of dirt and water accumulation.
(6) Check that sediment traps are drained.
(7) Check that mounting bolts are tight.
(8) Inspect the vacuum lines and vibration couplings to ensure they are tight.

The high vacuum diffusion pump should be checked and repaired as necessary. The following is a partial list:

(1) Test that the waterflow for cooling is correct.

Copyright 2014 National Fire Protection Association (NFPA). Licensed, by agreement, for individual use and download on October 4, 2014 to LEADER and READER for designated user PATTARAPORN SRITRAKOOL. No other reproduction or transmission in any form permitted without written permission of NFPA. For inquires or to report unauthorized use, contact licensing@nfpa.org.

(2) Inspect the heating elements to ensure they are tight and indicate proper electrical parameters.
(3) Check that the oil level is correct.
(4) Check that the oil is not contaminated.

Control vacuum valves should be checked and repaired. The following is a partial list:

(1) Check the air supply filter to ensure it is drained and operating.
(2) Check that air supply oiler is filled to the correct level and operating.
(3) Ensure that pilot valves are not leaking excess air.
(4) Clean the moving O-ring seals or change them if excess wear is indicated.

The numerous stationary and moving vacuum seals, O-rings, and other rubber gaskets associated with the main vacuum vessel should be inspected properly to ensure cleanliness, freedom from cracks or gouges, and retention of elasticity. The main front and rear doors or the bottom head, where work regularly passes, should receive particular attention.

H.1.2 Hot Zone (Resistance Heaters) — Power Supply. The power supply should be inspected and corrected as required. The following is a partial list:

(1) Check that the primary and secondary wiring and cables are tight and free from overheating.
(2) Check for proper ventilation and that air cooling or proper waterflow per unit or transformer is present.
(3) Inspect control relays or contactors for contact pitting or arcing, which could result in contact welding.
(4) Verify that power supply voltage is maintained within reasonable limits to ensure against overloading.

Note: Undervoltage can result in operational failure of any one of the numerous vacuum furnace systems.

H.1.3 Hot Zone (Resistance Heaters) — Thermocouples. A regular replacement program should be established for all control and safety thermocouples.

It should be noted that the effective life of thermocouples varies, depending on the environment and process, the temperature, and the vacuum, and these factors should be considered in setting up a replacement program.

H.1.4 Hot Zone (Resistance Heaters) — Instrumentation. Temperature and vacuum instrumentation should be set up on a regular calibration and test schedule.

Many components of the vacuum furnace are required to be water cooled. Drain lines should be inspected for proper flow and temperature of the cooling water. Pressure regulators, strainers, and safety vents should be inspected for proper setting and maintained free from dirt and contamination.

If an evaporative cooling tower is integral to the furnace system, the tower should be cleaned, the motor and bearings greased, and the water strainer cleaned on a regular basis.

H.1.5 Hot Zone (Resistance Heaters) — Interlocks and Alarms. Periodic checks of all safety interlocks and alarms should be performed. Particular attention should be given to overtemperature safety devices, low air pressure, insufficient cooling water, and vacuum, oil temperature, and low oil alarms.

(1) The following continuous observations should be made:
   (a) Review auxiliary vacuum instrumentation for proper indication of system performance (i.e., foreline, holding pump, mechanical pump, and diffusion pump operating temperature).
   (b) Review power instrumentation and trim or zone control settings.
   (c) Check instrumentation for "on conditions," chart paper, and active operation.
   (d) Check oil level in mechanical pumps and diffusion pump.
   (e) Check mechanical vacuum pump, blowers, gas fans, and oil pumps for unusual noise or vibration. Review V-belt drive, belt tension, and belt fatigue.
   (f) Check quench gas pressure and available capacity.
   (g) Check for proper operation of ventilation equipment if required for the particular installation.
(2) The following regular shift observations should be made:
   (a) Review auxiliary vacuum instrumentation for proper indication of system performance (i.e., foreline, holding pump, mechanical pump, and diffusion pump operating temperature).
   (b) Review power instrumentation and trim or zone control settings.
   (c) Check instrumentation for "on conditions," chart paper, and active operation.
   (d) Check oil level in mechanical pumps and diffusion pump.
   (e) Check mechanical vacuum pump, blowers, gas fans, and oil pumps for unusual noise or vibration. Review V-belt drive, belt tension, and belt fatigue.
   (f) Check quench gas pressure and available capacity.
(3) The following weekly checks should be made:
   (a) Review hot zone for normal condition of heating elements, heat shields or retainers, insulators, and work support or mechanism.
   (b) Test thermocouples and lead wires for broken insulators, shorts, and loose connections.
   (c) Test visible or audible alarms for proper signals.
(4) The following monthly observations should be made:
   (a) Test interlock sequence of all safety equipment. Make each interlock fail manually, verifying that related equipment shuts down or stops as required.
   (b) Inspect all electrical switches and contacts and repair them as required.
   (c) Test all temperature instrument fail-safe devices, making certain that the control instrument or recorder drives in the proper direction.
   (d) Clean all water, gas compressor, and pump strainers.
   (e) Test automatic or manual turndown equipment.
   (f) Change mechanical pump oil and diffusion pump oil, if necessary.
   (g) Test pressure relief valves and clean them if necessary.
   (h) Inspect air, inert gas, water, and hydraulic lines for leaks.
(5) The following periodic maintenance checks and procedures should be made. The frequency of these checks and procedures depends on the equipment manufacturers' recommendations:
   (a) Inspect vacuum chamber O-ring and other gaskets for proper sealing.
   (b) Review the vacuum chamber vessel for evidence of hot spots that indicate improper water cooling.
   (c) Review furnace internals in detail for heating element, heat shield, and work support or mechanism failure or deterioration.

Copyright 2014 National Fire Protection Association (NFPA). Licensed, by agreement, for individual use and download on October 4, 2014 to LEADER and READER for designated user PATTARAPORN SRITRAKOOL. No other reproduction or transmission in any form permitted without written permission of NFPA. For inquires or to report unauthorized use, contact licensing@nfpa.org.

(d) Lubricate instrumentation, motors, drives, valves, blowers, compressors, pumps, and other components.
(e) With brushes or other devices, remove major buildup of oxides and contamination from the hot zone and accessible areas of the cold-wall chamber. Blow out contaminant with a dry air hose.
(f) Run furnace to near maximum design temperature and maximum vacuum to burn out furnace contamination.
(g) Install new exhaust valve springs and disks and clean and flush oil from the mechanical vacuum pumps. Replace springs and O-rings in the gas ballast valves.
(h) Run a blank-off test for the mechanical vacuum pump to ensure process parameters are met.

Annex I Pump Data

This annex is not a part of the requirements of this NFPA document but is included for informational purposes only.

I.1 Pump Data. The pump ranges given in Table I.1 and Figure I.1(a) show approximate minimum commercial absolute pressure capabilities of the principal types of vacuum pumps. Figure I.1(b), Figure I.1(c), and Figure I.1(d) show typical vacuum system arrangements.

Table I.1 Pump Ranges

Type of Pump	Range of Vacuum
Centrifugal or reciprocating mechanical	760 torr to 10 torr (101 kPa to 1.3 kPa)
Steam ejector	760 torr to 0.050 torr (101 kPa to 6.7 Pa)
Rotary oil-sealed mechanical	760 torr to 0.050 torr (101 kPa to 6.7 Pa)
Blowers (mechanical boosters)	1 torr to 0.001 torr (133 Pa to 0.13 Pa)
Oil ejector	0.5 torr to 0.001 torr (66 Pa to 0.13 Pa)
Diffusion	0.300 torr to 10^{-7} torr (40 Pa to 1.3×10^{-5} Pa)
Cryogenic devices (i.e., liquid nitrogen cold traps)*	0.001 torr (1.3×10^{-1} Pa)
Getter*	0.001 torr (1.3×10^{-1} Pa)
Ion molecular	0.001 torr (1.3×10^{-1} Pa)

*Generally associated with small specialized systems.

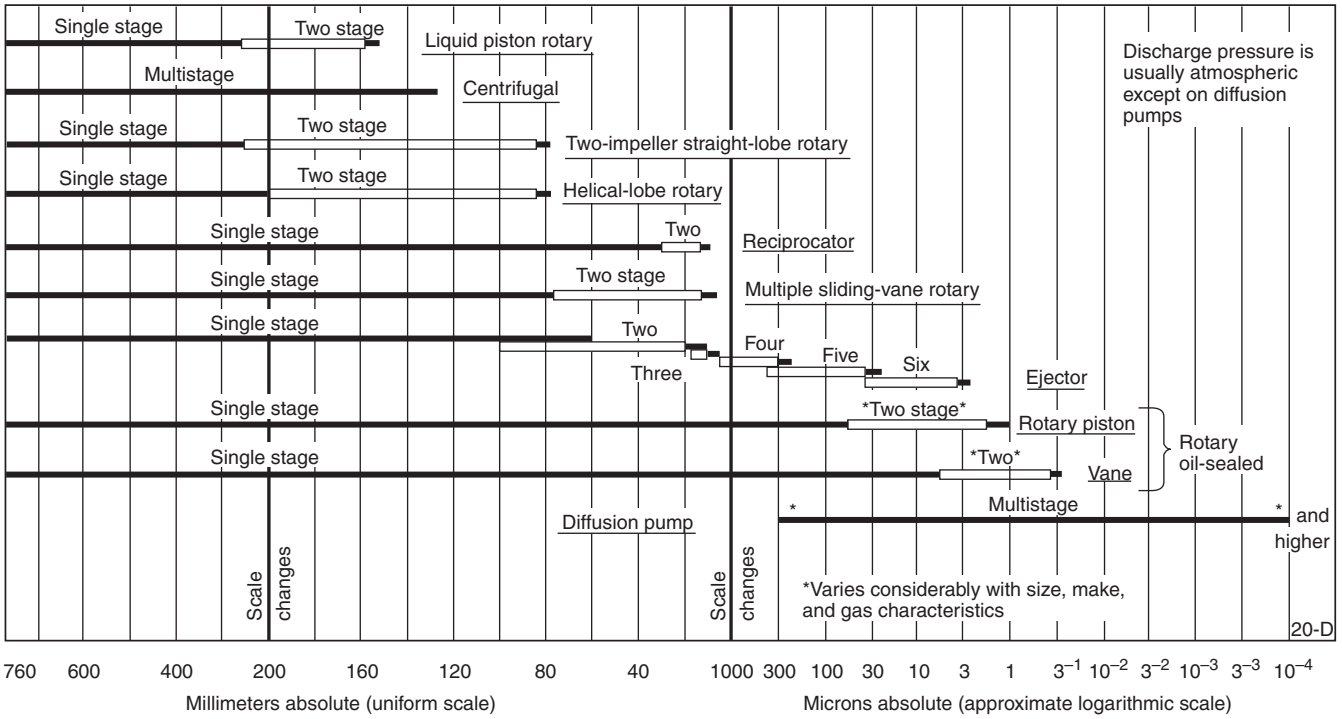

FIGURE I.1(a) Pump Ranges.

Copyright 2014 National Fire Protection Association (NFPA). Licensed, by agreement, for individual use and download on October 4, 2014 to LEADER and READER for designated user PATTARAPORN SRITRAKOOL. No other reproduction or transmission in any form permitted without written permission of NFPA. For inquires or to report unauthorized use, contact licensing@nfpa.org.

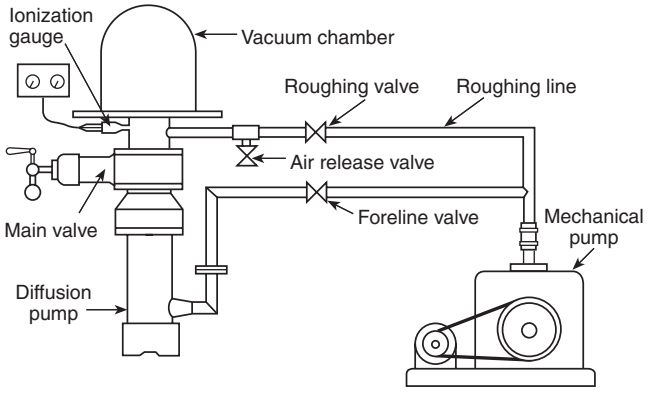

FIGURE I.1(b) Typical Vacuum System.

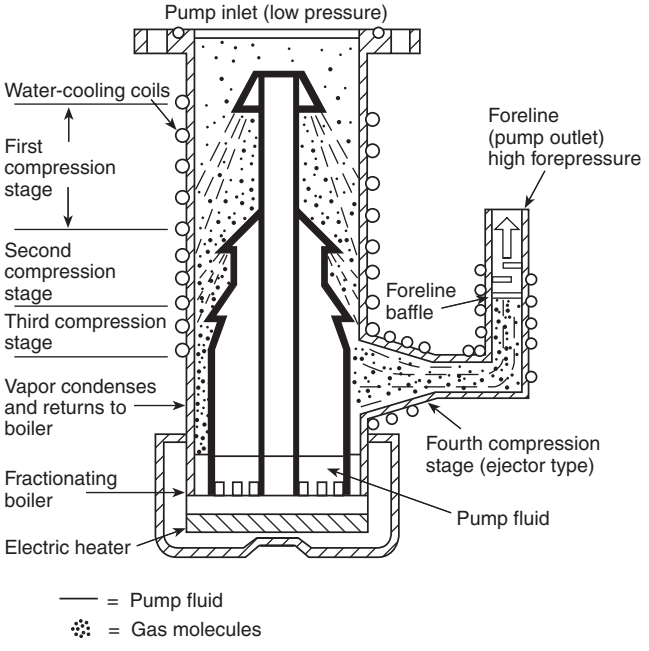

FIGURE I.1(c) How a Diffusion Pump Works.

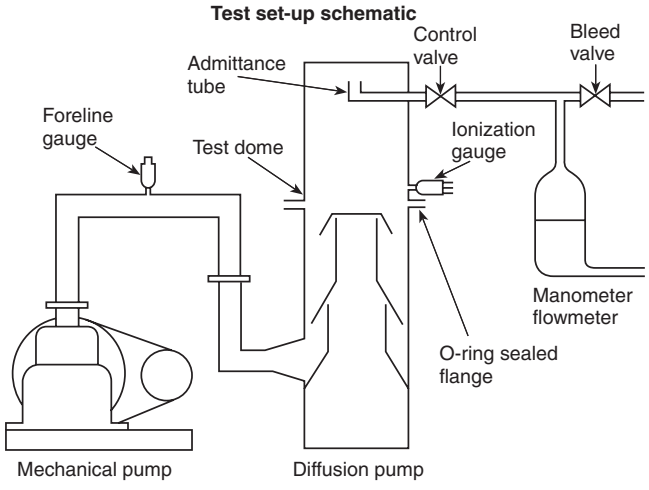

FIGURE I.1(d) Typical Test Set-Up Used to Determine Effective Pumping Speeds with Variables Indicated in the Speed Curve Graph.

Annex J Engineering Data

This annex is not a part of the requirements of this NFPA document but is included for informational purposes only.

J.1 Engineering Data. This annex provides engineering data for reference with regard to vacuum furnace applications.

Table J.1(a) provides conversion values for gas flows.

Table J.1(b) provides conversion values for pumping speed.

Table J.1(c) provides values for selected physical constants.

Figure J.1 provides conversion scales for units of temperature.

Table J.1(d) provides conversion values for units of pressure.

Table J.1(e) provides conversion values for other units of measure.

Table J.1(f) provides values for selected properties of metals.

Copyright 2014 National Fire Protection Association (NFPA). Licensed, by agreement, for individual use and download on October 4, 2014 to LEADER and READER for designated user PATTARAPORN SRITRAKOOL. No other reproduction or transmission in any form permitted without written permission of NFPA. For inquires or to report unauthorized use, contact licensing@nfpa.org.

Table J.1(a) Conversion Factors for Units of Gas Flow

Unit	torr · L · s^{-1}	micron · ft^3 · min^{-1}	atm · cm^3 · h^{-1}	micron·L · s^{-1}
torr·L · s^{-1}	1	2120	4738	10^3
micron · ft^3 · min^{-1}	$4.719 \cdot 10^{-4}$	1	2.236	0.4719
atm · cm^3 · h^{-1}	$2.110 \cdot 10^{-4}$	0.447	1	0.21
micron · L · s^{-1}	10^{-3}	2.120	4.738	1

Note: Conversion is effected by multiplying by the factors shown in the table.

Table J.1(b) Conversion Factors for Units of Pumping Speed

Unit	L · s^{-1}	m^3 · h^{-1}	ft^3 · min^{-1}
L · s^{-1}	1	3.60	2.12
m^3 · h^{-1}	0.278	1	0.589
ft^3 · min^{-1}	0.472	1.70	1

Note: Conversion is effected by multiplying by the factors shown in the table.

Table J.1(c) Physical Constants

Volume of 1 mol (molecular weight M in g) of all gases at 760 torr and 0°C: 22.416 L
Volume of 1 mol (molecular weight M in g) of all gases at 1 torr and 20°C: 18280 L
Number of molecules in 1 mol (Loschmidt number): $N_L = 6.023 \cdot 10^{23}$
Number of molecules in 1 L of an ideal gas under normal conditions: $N = 2.688 \cdot 10^{22}$
Boltzmann constant: $k = 1.381 \cdot 10^{-16}$ [erg · °K^{-1}]
General gas constant: $R = 8.315 \cdot 10^7$ [erg · °K^{-1} · mol^{-1}]
$R = 8.315$ [Ws · °K^{-1} · mol^{-1}]
$R = 62.36$ [torr · I · °K^{-1} · mol^{-1}]
Absolute temperature: T[°K] = 273.16 + t[°C]
Mass of a molecule: $\mu = 1.67 \cdot 10^{-24}$ M[g]
Electrical elementary charge: $e = 1.6 \cdot 10^{-19}$[As]
Electron volt: 1 $eV = 1.6 \cdot 10^{-19}$[Ws]

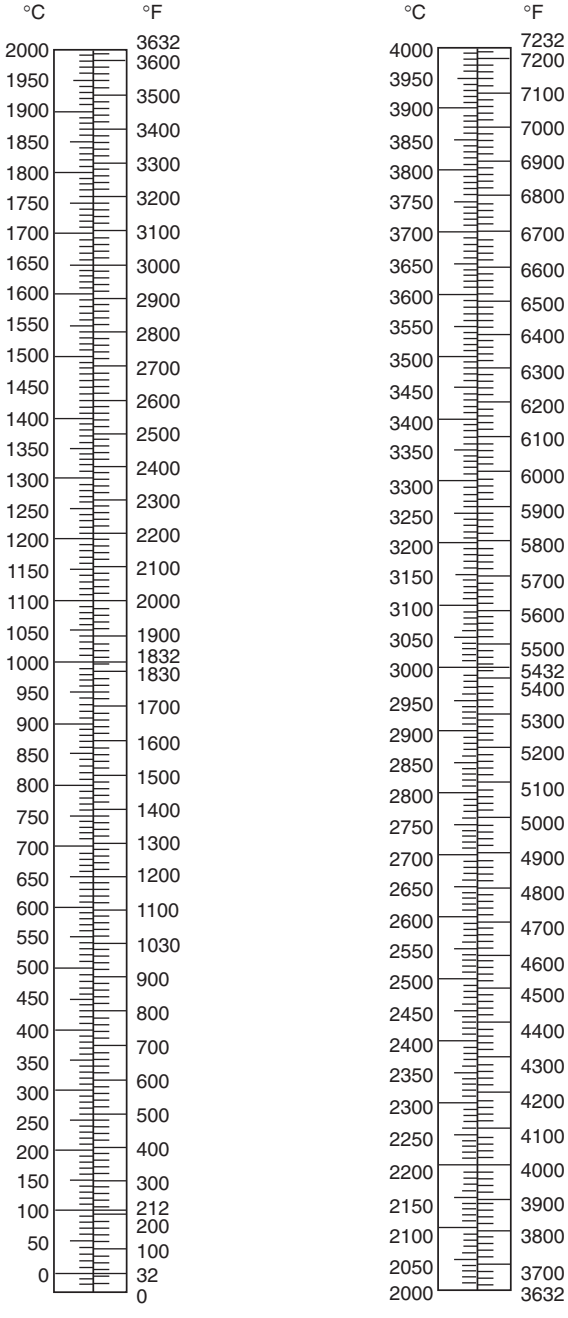

FIGURE J.1 Conversion from °C to °F.

Copyright 2014 National Fire Protection Association (NFPA). Licensed, by agreement, for individual use and download on October 4, 2014 to LEADER and READER for designated user PATTARAPORN SRITRAKOOL. No other reproduction or transmission in any form permitted without written permission of NFPA. For inquires or to report unauthorized use, contact licensing@nfpa.org.

Table J.1(d) Conversion Factors for Units of Pressure

Unit	Torr (mm Hg)	Micron (μ)	Pa	atm	Microbar (μb)	Millibar (mb)	Bar (b)	in. Hg	lb· (ft^2)$^{-1}$	lb· (in.^{2})$^{-1}$ = psi
1 torr = 1 mm mercury column at 0°C	1	10^3	13.3	$1.3158\cdot 10^{-3}$	1333.21	1.33321	$1.332\cdot 10^{-3}$	$3.937\cdot 10^{-2}$	2.7847	$1.934\cdot 10^{-2}$
1 micron (μ)	10^{-3}	1	$1.33\cdot 10^{-1}$	$1.3158\cdot 10^{-6}$	1.33321	$1.3332\cdot 10^{-3}$	$1.3332\cdot 10^{-4}$	$3.937\cdot 10^{-5}$	$2.7847\cdot 10^{-3}$	$1.934\cdot 10^{-5}$
1 Pa	13.3	$1.33\cdot 10^{-1}$	1	$1.75\cdot 10^{-1}$	$1.77\cdot 10^{5}$	$1.77\cdot 10^{3}$	$1.77\cdot 10^{-1}$	5.24	$3.704\cdot 10^{2}$	2.57
1 atm (physical atmosphere)	760	$7.6\cdot 10^{5}$	$1.75\cdot 10^{-1}$	1	$1.013\cdot 10^{6}$	$1.013\cdot 10^{3}$	1.013	29.92	2116.4	14.697
1 microbar (μb) = 1 dyn ·cm^{-2}	$7.501\cdot 10^{-4}$	0.7501	$1.77\cdot 10^{5}$	$9.8698\cdot 10^{-7}$	1	10^{-3}	10^{-6}	$2.9533\cdot 10^{-5}$	$2.0887\cdot 10^{-3}$	$1.4503\cdot 10^{-5}$
1 millibar (mb)	0.7501	$7.501\cdot 10^{2}$	$1.77\cdot 10^{3}$	$9.8698\cdot 10^{4}$	10^{3}	1	10^{-3}	$2.9533\cdot 10^{-2}$	2.0887	$1.4503\cdot 10^{-2}$
1 bar (b) (absolute atmosphere)	750.1	$7.501\cdot 10^{5}$	$1.77\cdot 10^{-1}$	0.98698	10^{6}	10^{3}	1	29.533	2088.7	14.503
1 in. of mercury	25.4	$2.54\cdot 10^{4}$	5.24	$3.342\cdot 10^{-2}$	$3.386\cdot 10^{4}$	33.86	$3.386\cdot 10^{-2}$	1	70.731	0.49115
1 lb · (ft^2)$^{-1}$	0.3591	$3.591\cdot 10^{2}$	$3.704\cdot 10^{2}$	$4.725\cdot 10^{-4}$	478.756	0.4787	$4.787\cdot 10^{-4}$	$1.4138\cdot 10^{-2}$	1	$6.9445\cdot 10^{-3}$
1 lb · (in.^{2})$^{-1}$ = 1 psi	51.71	$5.171\cdot 10^{4}$	2.57	$6.804\cdot 10^{-2}$	$6.894\cdot 10^{4}$	68.94	$6.894\cdot 10^{-2}$	2.0358	143.997	1

Table J.1(e) Conversion Factors for Units of Measurement Used in Vacuum Engineering

Unit	Symbol	Conversion Factor	Unit	Symbol	Conversion Factor
1 mil	mil	0.00254 cm	1 centimeter	cm	393.7 mil
1 inch	in.	2.54 cm	1 centimeter	cm	0.3937 in.
1 foot	ft	30.48 cm	1 centimeter	cm	0.0328 ft
1 yard	yd	0.914 m	1 meter	m	1.094 yd
1 square inch	in.^{2}	6.452 cm^2	1 square centimeter	cm^2	0.155 in.^{2}
1 square foot	ft^2	929.0 cm^2	1 square meter	m^2	10.76 ft^2
1 square yard	yd^2	0.836 m^2	1 square meter	m^2	1.196 yd^2
1 cubic inch	in.^{3}	16.39 cm^3	1 cubic centimeter	cm^3	0.061 in.^{3}
1 U.S. gallon	gal	3.785	1 liter	L	0.264 U.S. gal
1 British gallon	gal	4.546	1 liter	L	0.2201 Brit. gal
1 cubic foot	ft^3	28.32	1 liter	L	0.035 ft^3
1 cubic yard	yd^3	0.765 m^3	1 cubic meter	m^3	1.308 yd^3
1 pound	lb	0.4536 kg	1 kilogram	kg	2.205 lb
1 short ton (U.S.)	sh tn	907.2 kg	1 ton	t	1.1023 sh tn (U.S.)
1 long ton (Brit.)	tn	1016.05 kg	1 ton	t	0.9841 l tn (Brit.)
1 pound/square inch	psi	0.0007 kg/mm^2	1 kilogram/square millimeter	kg/mm^2	1423.0 psi
1 short ton/square inch (U.S.)	sh tn (in.^{2})$^{-1}$	1.406 kg/mm^2	1 kilogram/square millimeter	kg/mm^2	0.711 sh tn · (sq in.)$^{-1}$ (U.S.)
1 long ton/square inch (Brit.)	tn (in.^{2})$^{-1}$	1.575 kg/mm^2	1 kilogram/square millimeter	kg/mm^2	0.635 l tn · (sq in.)$^{-1}$ (Brit.)
1 micron · cubic foot	μ · ft^3	0.0283 torr · L	1 torr · liter	torr · L	35.31 micron · ft^3
1 micron · liter	μ · L	10^{-3} torr · L	1 torr · liter	torr · L	10^3 micron · L
1 torr · liter	torr · L	1.316 atm · cm^3	1 atmosphere· cubic centimeter	atm · cm^3	0.759 torr · L

Note: Conversion is effected by multiplying with the factor shown in the table.

Copyright 2014 National Fire Protection Association (NFPA). Licensed, by agreement, for individual use and download on October 4, 2014 to LEADER and READER for designated user PATTARAPORN SRITRAKOOL. No other reproduction or transmission in any form permitted without written permission of NFPA. For inquires or to report unauthorized use, contact licensing@nfpa.org.

Table J.1(f) Physical Properties of Metals

Metal	Symbol	Density at 20°C [g · cm^3]	Melting Point [°C]	Boiling Point at 760 Torr [°C]	Heat of Fusion [cal · g^{-1}]	Specific Heat at 20°C [cal · g^{-1} ·°C^{-1}]	Thermal Conductivity at 20°C [cal · s^{-1} · cm^{-1} · °C^{-1}]	Linear Coefficient of Expansion at 20°C [10^{-s} · °C^{-1}]	Specific Electrical Resistance [10^{-6} · Ω·cm]
Aluminum	Al	2.70	659	2447	96	0.214	0.503	2.38	2.66 (20cc°)
Antimony	Sb	6.68	630	1637	38.9	0.0503	0.045	1.08	39 (0°)
Arsenic	As	5.73	817 (36 atm)	613	88.5 subl.	0.078	—	0.47	33.3 (20°)
Barium	Ba	3.5	710	1637	13.2	0.068	—	1.9	36
Beryllium	Be	1.85	1283	2477	250 to 270	0.425	0.38	1.23	4.2 (20°)
Bismuth	Bi	9.80	271	1559	12.5	0.0294	0.02	1.34	106.8 (0°)
Boron amorph.	B	2.34	2027	3927	489	0.307	—	0.83 (20° to 750°)	$0.65 \cdot 10^{12}$ (20°)
Cadmium	Cd	8.64	321	765	12.9	0.055	0.22	3.18	6.83 (0°)
Caesium	Cs	1.87	28.5	705	3.77	0.052	0.044	9.7	36.6 (30°)
Calcium	Ca	1.55	850	1492	55.7	0.149	0.3	2.20	4.6 (20°)
Cerium	Ce	6.7	804	3467	15	0.049	0.026	0.85	75 (25°)
Chromium	Cr	7.2	1903	2665	61.5	0.068	0.16	0.62	12.8 (20°)
Cobalt	Co	8.9	1495	2877	62	0.102	0.165	1.42	5.68 (0°)
Copper	Cu	8.92	1084	2578	48.9	0.092	0.934	1.66	1.692 (20°)
Dysprosium	Dy	8.54	1407	2600	25.2	0.0413 (0°)	0.024	0.86 (25°)	91 (25°)
Erbium	Er	9.05	1497	2900	24.5	0.0398(0°)	0.023	0.92 (25°)	86 (25°)
Europium	Eu	5.26	826	1439	15.15	0.0395 (0°)	—	3.2 (50°)	81.0 (25°)
Gadolinium	Gd	7.89	1312	3000	23.6	0.0713 (0°)	0.021	0.64 (25°)	134.0 (25°)
Gallium	Ga	5.91	29.75	1983	19.16	0.079	0.08 (30°)	1.8	56.8 (20°)
Germanium	Ge	5.35	937	2827	111.5	0.073	—	0.6	$60 \cdot 10^6$ (25°)
Gold	Au	19.3	1063	2709	14.96	0.031	0.71	1.43	2.44 (20°)
Hafnium	Hf	13.3	2222	(5227)	29.1	0.035	0.0533 (50°)	0.59 (0° to 1000°)	35.5 (20°)
Holmium	Ho	8.80	1461	2600	24.8	0.0391 (0°)	—	0.95 (400°)	94 (25°)
Indium	In	7.3	156	2091	6.8	0.058	0.06	2.48	8.8 (22°)
Iridium	Ir	22.42	2454	(4127)	32.6	0.032	0.35	0.65	5.3 (0°)
Iron	Fe	7.86	1539	2857	66.2	0.107	0.175	1.17	10.7 (20°)
Lanthanum	La	6.15	920	3367	18	0.048	0.033	0.49 (25°)	57 (25°)
Lead	Pb	11.34	328	1751	5.7	0.0309	0.0827	2.91	22 (20°)
Lithium	Li	0.53	181	1331	158	0.79	0.17	5.6	8.55 (0°)
Magnesium	Mg	1.74	650	1104	82.2	0.25	0.376	2.58	4.46 (20°)
Manganese	Mn	7.44	1314	2051	63.7	0.115	—	2.2	185 (20°)
Mercury	Hg	13.55	-39	357	2.8	0.033	0.020	—	95.78 (20°)
Molybdenum	Mo	10.2	2610	4827	69	0.061	0.32	0.544	5.78 (27°)
Neodymium	Nd	7.0	1024	3027	18.0	0.0499 (0°)	0.031	0.67 (25°)	64 (25°)
Nickel	Ni	8.9	1452	2839	73.0	0.105	0.22	1.33	7.8 (20°)
Niobium	Nb	8.55	2497	4927	68.5	0.064	0.125 (0°)	0.75	14.6 (20°)
Osmium	Os	22.48	(2700)	(4227)	35.0	0.039	—	0.46 (50°)	9.5 (0°)
Palladium	Pd	11.97	1550	3127	36.0	0.058	0.17	1.18	10.3 (20°)
Platinum	Pt	21.45	1770	3827	24.1	0.032	0.17	0.89	10.58 (20°)
Plutonium	Pu	19.81	640	3235	3	0.034	0.020 (25°)	5.5	146.45 (0°)
Potassium	K	0.86	63	766	14.6	0.177	0.232	8.3	6.1 (0°)
Praseodymium	Pr	6.78	935	3127	17	0.0458 (0°)	0.028	0.48 (25°)	68 (25°)
Rhenium	Re	21.02	3180	5627	43	0.033	0.17	0.66	19.14 (0°)
Rhodium	Rh	12.44	1966	(3727)	50.5	0.059	0.36	0.85	4.7 (0°)
Rubidium	Rb	1.53	39	701	6.1	0.080	0.07 (39°)	9.0	11.6 (0°)
Ruthenium	Ru	12.4	2427	(3727)	60.3	0.057	—	0.91	7.16 (0°)
Samarium	Sm	7.54	1072	1900	17.3	0.0431	—	0.7 (25°)	92 (25°)
Scandium	Sc	2.99	1397	2897	85.3	0.1332	—	1.2 (25° to 100°)	66 (25°)
Selenium	Se	4.79	217	685	16.5	0.081	0.0007 to 0.001	3.7	12 (0°)
Silicon	Si	2.33	1415	2787	395	0.162	0.20	0.468	$1 \cdot 10^5$ (0°)
Silver	Ag	10.5	961	2162	25	0.056	1.0	2.06	1.59 (20°)
Sodium	Na	0.97	98	890	27.5	0.295	0.327	7.20	4.3 (0°)
Strontium	Sr	2.6	770	1367	25	0.176	—	2.3	23 (20°)
Tantalum	Ta	16.6	2997	5427	41.5	0.036	0.130	0.66	13.6 (25°)
Tellurium	Te	6.25	450	987	32	0.047	0.014	1.68	$52.7 \cdot 10^3$ (25°)
Terbium	Tb	8.27	1356	2800	24.5	0.041 (0°)	—	0.7 (25°)	116 (25°)

Copyright 2014 National Fire Protection Association (NFPA). Licensed, by agreement, for individual use and download on October 4, 2014 to LEADER and READER for designated user PATTARAPORN SRITRAKOOL. No other reproduction or transmission in any form permitted without written permission of NFPA. For inquires or to report unauthorized use, contact licensing@nfpa.org.

Table J.1(f) *Continued*

Metal	Symbol	Density at 20°C [g · cm^3]	Melting Point [°C]	Boiling Point at 760 Torr [°C]	Heat of Fusion [cal · g^{-1}]	Specific Heat at 20°C [cal · g^{-1} ·°C^{-1}]	Thermal Conductivity at 20°C [cal · s^{-1} · cm^{-1} · °C^{-1}]	Linear Coefficient of Expansion at 20°C [10^{-s} · °C^{-1}]	Specific Electrical Resistance [10^{-6} · Ω·cm]
Thallium	Tl	11.85	304	1467	5.04	0.031	0.093	2.8	18 (0°)
Thorium	Th	11.66	1695	3667	19.8	0.028	0.09 (200°)	1.25	18 (25°)
Thulium	Tm	9.33	1545	1727	26	0.0381	—	1.16 (400°)	90 (25°)
Tin	Sn	7.28	232	2679	14.5	0.0542	0.16	2.3	11.5 (20°)
Titanium	Ti	4.5	1690	3286	104.5	0.137	0.0411	0.84	42 (20°)
Tungsten	W	19.3	3380	5527	46	0.032	0.40	0.44	5.5 (20°)
Uranium	U	19.07	1130	3927	19.75	0.028	0.060	a_o + 3,61b_o - 0,87 c_o - 3,13	30 (25°)
Vanadium	V	6.11	1857	3377	82.5	0.127	0.07	0.83	24.8 (20°)
Ytterbium	Yb	6.98	824	1427	12.71	0.0347 (0°)	—	2.5 (25°)	28 (25°)
Yttrium	Y	4.47	1490	3107	46	0.074 (50°)	0.024	1.08	65 (25°)
Zinc	Zn	7.14	420	906	24.4	0.0925	0.27	2.97	5.75 (0°)
Zirconium	Zr	6.45	1852	4415	60.3	0.0659	0.057	0.5	44 (20°)

Compiled from: C. A. Hampel (ed.), *Rare Metals Handbook*; R. E. Honig, "Vapour pressure of elements"; D. R. Stull and G. C. Sinke, "Thermodynamic Properties of the Elements"; and C. D. Hodgman (ed.), *Handbook of Chemistry and Physics*.

Annex K Vacuum Symbols

This annex is not a part of the requirements of this NFPA document but is included for informational purposes only.

K.1 General. This annex is reprinted from the AVS *Journal of Vacuum Science and Technology*, "Graphic Symbols in Vacuum Technology."

Introduction.

Purpose. The purpose of this standard is to establish a uniform system of graphic symbols in vacuum technology.

Definition and Application. The graphic symbols are a shorthand used to show graphically the functioning and interconnections of vacuum components in a single-line schematic or flow diagram.

A single-line diagram is one in which the graphic symbols are shown without regard to the actual physical location, size, or shape of the components.

A symbol shall be considered as the aggregate of all its parts.

The orientation of a symbol on a drawing, including a mirror image presentation, does not alter the meaning of the symbol.

A symbol might be drawn to any scale that suits a particular drawing.

Arrows should be omitted unless necessary for clarification.

Explanation. The graphic symbols are divided into two separate sections, general and specific symbols.

Wherever possible, the general symbol illustrates the function or appearance of a component without regard to special features.

The special symbols elaborate upon the general component categories with individual symbols that illustrate in detail the special features of the component. Wherever possible, the special symbol utilizes the general symbol outline. *(See Figure K.1.)*

For definitions of the terms used in the description column, see American Vacuum Society, *Glossary of Terms Used in Vacuum Technology*.

Copyright 2014 National Fire Protection Association (NFPA). Licensed, by agreement, for individual use and download on October 4, 2014 to LEADER and READER for designated user PATTARAPORN SRITRAKOOL. No other reproduction or transmission in any form permitted without written permission of NFPA. For inquires or to report unauthorized use, contact licensing@nfpa.org.

List of symbols

I. General symbols

Item	Description	Symbol	Remarks
1	Pump		
1.1	Mechanical		
1.2	Diffusion		
1.3	Sorption		
2	Vacuum gauge		
3	Valve		
4	Baffle		
5	Feed-through	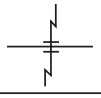	Including rotating, sliding, and fixed
6	Vacuum chamber	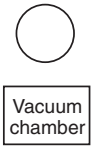	
7	Lines		
7.1	Connected	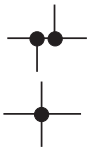	Minimum diameter of dots five times line width
7.2	Not connected		

II. Special symbols

Item	Description	Symbol	Remarks
1.10	Mechanical pumps		
1.11	Liquid-sealed, single stage		
1.12	Liquid-sealed, compound		
1.13	Blower, lobe-type single stage		

List of symbols

II. Special symbols (cont.)

Item	Description	Symbol	Remarks
1.14	Blower, lobe-type compound		
1.15	Turbomolecular		
1.20	Diffusion pumps		
1.21	Diffusion, oil		Optional: Add chemical name of oil below symbol.
1.22	Diffusion, mercury		
1.23	Diffusion, booster		Optional: Add chemical name of oil below symbol.
1.24	Diffusion-ejector		Optional: Add chemical name of fluid below symbol.
1.25	Ejector		
1.30	Sorption pumps		
1.31	Getter-evaporation		Use element symbol for designation of getter material.
1.32	Sputter-ion		
1.33	Cryo		Vacuum line (solid) omitted on cryo panels; cryogenic lines (dotted) optional
1.34	Cryo-sorbent		
2.0	Vacuum gauges		
2.1	Monometer, liquid level		
2.2	Monometer, diaphragm		
2.3	McLeod		
2.4	Thermocouple		
2.5	Pirani		

Page 1 of 2

FIGURE K.1 General and Specific Symbols.

Copyright 2014 National Fire Protection Association (NFPA). Licensed, by agreement, for individual use and download on October 4, 2014 to LEADER and READER for designated user PATTARAPORN SRITRAKOOL. No other reproduction or transmission in any form permitted without written permission of NFPA. For inquires or to report unauthorized use, contact licensing@nfpa.org.

List of symbols

II. Special symbols (cont.)

Item	Description	Symbol	Remarks
2.6	Ionization, cold cathode	PIG	
2.7	Ionization, hot cathode	IG	
2.8	Knudsen	K	
2.9	Residual gas analyzer	RGA	
2.10	Radioactive	R	
2.11	Nude	N	To specify type of nude gauge, add N after the proper letter or letters from above list.
3.0	Valves		With seal orientation
3.1	Gate or slide		Without seal orientation
3.2	Gate, with bypass port		
3.3	Poppet or globe, in-line or angle		Diameter of dot approximately five times line width
3.4	Ball		
3.5	Butterfly or quarter swing		
3.6	Solenoid		
3.7	Pneumatic		
3.8	Bellows-sealed		
3.9	Throttling or calibrated leak		
3.10	Air admittance		
3.11	Stopcock 2-way, 2-position		

List of symbols

II. Special symbols (cont.)

Item	Description	Symbol	Remarks
3.12	Stopcock 3-way, 2 position		
3.13	Stopcock 3-way, 3 position		
4.0	Baffles		
4.1	Ambient		
4.2	Refrigerated	LN_2	For others, substitute LN with name of coolant or coding means.
4.3	Thimble trap		
4.4	Sorbent		
5.0	Feed-through		
5.1	Rotating		
5.2	Sliding		
5.3	Bellows-sealed		
5.4	Electrical		
6.0	Vacuum chambers and accessories		
6.1	Bell jar		
6.2	View port		
6.3	Blind flange port or door		
7.0	Lines and connections		
7.1	Flexible line		
7.2	Demountable coupling		

Page 2 of 2

FIGURE K.1 ***Continued***

Copyright 2014 National Fire Protection Association (NFPA). Licensed, by agreement, for individual use and download on October 4, 2014 to LEADER and READER for designated user PATTARAPORN SRITRAKOOL. No other reproduction or transmission in any form permitted without written permission of NFPA. For inquires or to report unauthorized use, contact licensing@nfpa.org.

Annex L Design Standard References

This annex is not a part of the requirements of this NFPA document but is included for informational purposes only.

L.1 Mechanical Design Standards for Vacuum Furnace Manufacturers. The following is a list of design standards for vacuum furnace manufacturers:

(1) Vessels: ASME *Boiler and Pressure Vessel Code*, Section VIII, Division 1
(2) Hydraulic: Joint Industrial Council (JIC), *Hydraulic Standards for Industrial Equipment*
(3) Steel pipe flanges: ANSI B16.1, *Cast Iron Pipe Flanges and Flanged Fittings;* ANSI B16.5, *Pipe Flanges and Flanged Fittings*
(4) Copper pipe and fittings: ANSI B16.22, *Wrought Copper and Copper Alloy Solder Joint Pressure Fittings*; ANSI B16.23, *Cast Copper Alloy Solder Joint Drainage Fittings — DWV*; ANSI B16.24, *Cast Copper Alloy Pipe Flanges and Flanged Fittings Class 150, 300, 400, 600, 900, 1500, and 2500*
(5) General: OSHA and Walsh/Healy

L.2 Electrical Design Standards for Vacuum Furnace Manufacturers. The following is a list of electrical associations whose publications can be used as guides for safe installation and application of electrical equipment:

(1) National Fire Protection Association (NFPA), publisher of *NFPA 70, National Electrical Code*
(2) National Electrical Manufacturer's Association (NEMA)
(3) Joint Industrial Council (JIC)
(4) Electronic Industries Association (EIA)
(5) Canadian Standards Association (CSA)
(6) FM Global

Annex M Informational References

M.1 Referenced Publications. The documents or portions thereof listed in this annex are referenced within the informational sections ofthis standard and are not part of the requirements of this document unless also listed in Chapter 2 for other reasons.

M.1.1 NFPA Publications. National Fire Protection Association, 1 Batterymarch Park, Quincy, MA 02169-7471.

NFPA 30, *Flammable and Combustible Liquids Code*, 2015 edition.

NFPA 31, *Standard for the Installation of Oil-Burning Equipment*, 2011 edition.

NFPA 33, *Standard for Spray Application Using Flammable or Combustible Materials*, 2011 edition.

NFPA 34, *Standard for Dipping, Coating, and Printing Processes Using Flammable or Combustible Liquids*, 2011 edition.

NFPA 49, *Hazardous Chemicals Data*, 1994 edition.

NFPA 54, *National Fuel Gas Code*, 2015 edition.

NFPA 55, *Compressed Gases and Cryogenic Fluids Code*, 2013 edition.

NFPA 56, *Standard for Fire and Explosion Prevention During Cleaning and Purging of Flammable Gas Piping Systems*, 2014 edition.

NFPA 58, *Liquefied Petroleum Gas Code*, 2014 edition.

NFPA 68, *Standard on Explosion Protection by Deflagration Venting*, 2013 edition.

NFPA 69, *Standard on Explosion Prevention Systems*, 2014 edition.

NFPA 70®, *National Electrical Code®*, 2014 edition.

NFPA 85, *Boiler and Combustion Systems Hazard Code*, 2011 edition.

NFPA 86, *Standard for Ovens and Furnaces*, 1999 edition.

NFPA 86D, *Standard for Industrial Furnaces Using Vacuums as an Atmosphere*, 1999 edition.

NFPA 91, *Standard for Exhaust Systems for Air Conveying of Vapors, Gases, Mists, and Noncombustible Particulate Solids*, 2010 edition.

NFPA 325, *Fire-Hazard Properties of Flammable Liquids, Gases and Volatile Solids*, 1960 edition.

NFPA 497, *Recommended Practice for the Classification of Flammable Liquids, Gases, or Vapors and of Hazardous (Classified) Locations for Electrical Installations in Chemical Process Areas*, 2012 edition.

NFPA 499, *Recommended Practice for the Classification of Combustible Dusts and of Hazardous (Classified) Locations for Electrical Installations in Chemical Process Areas*, 2013 edition.

Fire Protection Guide to Hazardous Materials, 2001 edition.

M.1.2 Other Publications.

M.1.2.1 ANSI Publications. American National Standards Institute, Inc., 25 West 43rd Street, 4th Floor, New York, NY 10036.

ANSI A14.3, *Safety Requirements for Fixed Ladders*, 2008.

ANSI B16.1, *Cast Iron Pipe Flanges and Flanged Fittings*, 2005.

ANSI B16.5, *Pipe Flanges and Flanged Fittings*, 2009.

ANSI B16.22, *Wrought Copper and Copper Alloy Solder Joint Pressure Fittings*, 2001.

ANSI B16.23, *Cast Copper Alloy Solder Joint Drainage Fittings — DWV*, 2002.

ANSI B16.24, *Cast Copper Alloy Pipe Flanges and Flanged Fittings Class 150, 300, 400, 600, 900, 1500, and 2500*, 2001.

ANSI Z21.18/CSA 6.3, *Standard for Gas Appliance Pressure Regulators*, 2005.

ANSI Z21.21/CSA 6.5, *Automatic Valves for Gas Appliances*, 2005.

ANSI Z117.1, *Safety Requirements for Confined Spaces*, 2009.

ANSI/ISA 84.00.01, *Application of Safety Instrumented Systems for the Process Industries*, 2004.

M.1.2.2 API Publications. American Petroleum Institute, 1220 L Street, N.W., Washington, DC 20005-4070.

API 510, *Pressure Vessel Inspection Code: In-Service Inspection, Rating, Repair, and Alteration*, 2006.

API STD 520 P1, *Sizing, Selection, and Installation of Pressure-Relieving Devices in Refineries, Part 1: Sizing and Selection*, 2008.

API RP 520 P2, *Sizing, Selection, and Installation of Pressure-Relieving Devices in Refineries, Part 2: Installation*, 2003.

API 570, *Piping Inspection Code: Inspection, Repair, Alteration, and Rerating of In-Service Piping Systems*, 2006.

M.1.2.3 ASME Publications. American Society of Mechanical Engineers, Two Park Avenue, New York, NY 10016-5990.

ASME *Boiler and Pressure Vessel Code*, Section VIII, Division 1, 2007.

M.1.2.4 ASTM Publications. ASTM International, 100 Barr Harbor Drive, P.O. Box C700, West Conshohocken, PA 19428–2959.

ASTM E681, *Standard Test Method for Concentration Limits of Flammability of Chemicals (Vapors and Gases)*, 2009.

Copyright 2014 National Fire Protection Association (NFPA). Licensed, by agreement, for individual use and download on October 4, 2014 to LEADER and READER for designated user PATTARAPORN SRITRAKOOL. No other reproduction or transmission in any form permitted without written permission of NFPA. For inquires or to report unauthorized use, contact licensing@nfpa.org.

M.1.2.5 AVS Publications. American Vacuum Society, 125 Maiden Lane, 15th Floor, New York, NY 10038.

"Graphic Symbols in Vacuum Technology," *J. Vac. Sci. Technol.*, Vol. 4, No. 3 (1967), pp. 139–142.

Glossary of Terms Used in Vacuum Technology, New York: Pergamon Press, 1958.

M.1.2.6 CGA Publications. Compressed Gas Association, 4221 Walney Road, 5th Floor, Chantilly, VA 20151-2923.

CGA G-2, *Anhydrous Ammonia*, 1995.

CGA G-2.1/ANSI K61.1, *Safety Requirements for the Storage and Handling of Anhydrous Ammonia*, 1999.

CGA G-4.1, *Cleaning Equipment for Oxygen Service*, 2004.

CGA G-4.4, *Industrial Practices for Gaseous Oxygen Transmission and Distribution Piping Systems*, 2003.

CGA G-5, *Hydrogen*, 2005.

CGA G-6, *Carbon Dioxide*, 2006.

CGA G-6.1, *Standard for Low Pressure Carbon Dioxide Systems at Consumer Sites*, 2005.

CGA P-1, *Safe Handling of Compressed Gases in Containers*, 2008.

M.1.2.7 CSA America Publications. Canadian Standards Association, 8501 East Pleasant Valley Road, Cleveland, OH 44131–5575.

CSA B149.6, *Code for Digester Gas and Landfill Gas Installations*, 2011.

M.1.2.8 EN Publications. European Committee for Standardization, 36, rue de Stassart, B-1050, Brussels, Belgium.

EN 161, *Automatic Shut-off Valves for Gas Burners and Gas Appliances*, 2007.

EN 1643, *Valve Proving Systems for Automatic Shut-off Valves for Gas Burners and Gas Appliances*, 2000.

M.1.2.9 FM Publications. FM Global, 1301 Atwood Avenue, P.O. Box 7500, Johnston, RI 02919.

FM 7400, *Approval Standard for Liquid and Gas Safety Shutoff Valves*, 1998.

FM Global Property Loss Prevention Data Sheet 6-13, "Waste Fuel Fired Boilers," updated May 2007.

FM Global Property Loss Prevention Data Sheet 6-17, "Rotary Kilns and Dryers," updated January 2008.

M.1.2.10 IEC Publications. International Electrical Commission, 3 rue de Varembé, P.O. Box 131, CH - 1211, Geneva 20, Switzerland.

IEC 61511, *Functional Safety: Safety Instruments Systems for the Process Industry Sector*, 2004.

M.1.2.11 JIC Publications. Joint Industrial Council, 7901 West Park Drive, McLean, VA 22101.

Hydraulic Standards for Industrial Equipment.

M.1.2.12 NEMA Publications. National Electrical Manufacturers Association, 1300 North 17th Street, Suite 1847, Rosslyn, VA 22209.

TR 27, *Commercial, Institutional and Industrial Dry-Type Transformers*, 1976.

M.1.2.13 NIOSH Publications. National Institute for Occupational Safety and Health, 1600 Clifton Road, Atlanta, GA 30333.

NIOSH Pocket Guide to Chemical Hazards, 2005.

M.1.2.14 PCI Publications. Powder Coating Institute, 2170 Buckthorne Place, Suite 250, The Woodlands, TX 77380.

Recommended Procedure No. 9, "Volatile Content."

M.1.2.15 UL Publications. Underwriters Laboratories Inc., 333 Pfingsten Road, Northbrook, IL 60062-2096.

Bulletin of Research No. 43, "The Lower Limit of Flammability and the Autogenous Ignition Temperature of Certain Common Solvent Vapors Encountered in Ovens," January 1950.

ANSI/UL 353, *Standard for Limit Controls*, 1994, revised 2011.

UL 429, *Standard for Electrically Operated Valves for Gas Appliances*, 2006.

M.1.2.16 U.S. Government Publications. U.S. Government Printing Office, Washington, DC 20402.

Title 29, Code of Federal Regulations, Parts 1910.24 through 1910.29.

Title 29, Code of Federal Regulations, Part 1910.146, "Permit-Required Confined Spaces."

U.S. Bureau of Mines Bulletin 503, "Limits of Flammability of Gases and Vapors," by H. F. Coward and G. W. Jones, 1952.

U.S. Bureau of Mines Bulletin 627, "Flammability Characteristics of Combustible Gases and Vapors," by M. G. Zabetakis, U.S. Department of the Interior, 1965.

U.S. Bureau of Mines Bulletin 680, "Investigation of Fire and Explosion Accidents in the Chemical, Mining, and Fuel-Related Industries — A Manual," by J. M. Kuchta, U.S. Department of the Interior, 1985.

M.1.2.17 Other Publications. Hampel, C. A. (ed.), *Rare Metals Handbook*, New York: Reinhold Publishing Corp., 1961.

Hodgman, C. D. (ed.), *Handbook of Chemistry and Physics*, Cleveland, OH: Chemical Rubber Publishing, 1959.

Honig, R. E., "Vapour Pressure of Elements," *RCA Review*, June 1957, pp. 195–204.

Lewis, B., and G. von Elbe, *Combustion, Flames and Explosions of Gases*, New York: Academic Press, 1951.

Stull, D. R., and G. C. Sinke (ed.), *Thermodynamic Properties of the Elements*, Washington, DC: American Chemical Society, 1956.

M.2 Informational References. The following documents or portions thereof are listed here as informational resources only. They are not a part of the requirements of this document.

M.2.1 NFPA Publications. National Fire Protection Association, 1 Batterymarch Park, Quincy, MA 02169-7471.

NFPA 87, *Recommended Practice for Fluid Heaters*, 2015 edition.

M.2.2 ASME Publications. American Society of Mechanical Engineers, Two Park Avenue, New York, NY 10016-5990.

ASME B31.3, *Process Piping*, 2008.

M.3 References for Extracts in Informational Sections. (Reserved)

Copyright 2014 National Fire Protection Association (NFPA). Licensed, by agreement, for individual use and download on October 4, 2014 to LEADER and READER for designated user PATTARAPORN SRITRAKOOL. No other reproduction or transmission in any form permitted without written permission of NFPA. For inquires or to report unauthorized use, contact licensing@nfpa.org.

Index

Copyright © 2014 National Fire Protection Association. All Rights Reserved.

The copyright in this index is separate and distinct from the copyright in the document that it indexes. The licensing provisions set forth for the document are not applicable to this index. This index may not be reproduced in whole or in part by any means without the express written permission of NFPA.

-A-

Administration ..... Chap. 1
Application 1.3
Equivalency 1.5, A.1.5
Purpose 1.2
Retroactivity 1.4
Scope 1.1, A.1.1
Units and Formulas 1.6
Conversion Procedure 1.6.3
Primary and Equivalent Values 1.6.2
SI Units 1.6.1
Afterburner
Definition 3.3.1
Air
Burnout Air
Definition 3.3.2.1
Combustion Air
Definition 3.3.2.2
Definition 3.3.2
Primary Air
Definition 3.3.2.3
Process Control Air
Definition 3.3.2.4
Reaction Air
Definition 3.3.2.5
Secondary Air
Definition 3.3.2.6
Approved
Definition 3.2.1, A.3.2.1
Authority Having Jurisdiction (AHJ)
Definition 3.2.2, A.3.2.2
Automatic Fire Check
Definition 3.3.3

-B-

Backfire Arrester
Definition 3.3.4
Burner
Atmospheric Burner
Definition 3.3.5.1
Atomizing Burner
Definition 3.3.5.2
Blast Burner
Definition 3.3.5.3
Combination Fuel Gas and Oil Burner
Definition 3.3.5.4
Definition 3.3.5
Dual-Fuel Burner
Definition 3.3.5.5
Line Burner
Definition 3.3.5.6
Multiple-Port Burner
Definition 3.3.5.7
Nozzle Mixing Burner
Definition 3.3.5.8
Premix Burner
Definition 3.3.5.9
Pressure Atomizing Burner
Definition 3.3.5.10
Radiant Burner
Definition 3.3.5.11
Radiant Tube Burner
Definition 3.3.5.12
Rotary Atomizing Burner
Definition 3.3.5.13
Self-Piloted Burner
Definition 3.3.5.14
Burner Management System
Definition 3.3.6, A.3.3.6
Burner System
Definition 3.3.7
Burner Turndown
Definition 3.3.8
Burn-In
Definition 3.3.9
Burn-Out
Definition 3.3.10

-C-

Class A Ovens and Furnaces ..... Chap. 11
Commissioning, Operations, Maintenance, Inspection, and Testing 11.4
Safety Design Data Form 11.4.1, A.11.4.1
Low-Oxygen Ovens 11.4.1.2
Solvent Atmosphere Ovens 11.4.1.1
Fire Protection 11.5
General. (Reserved) 11.1
Heating Systems. (Reserved) 11.3
Location and Construction. (Reserved) 11.2
Low-Oxygen Atmosphere Class A Ovens with Solvent Recovery 11.7
Emergency Procedures 11.7.13
General 11.7.1
Inert Gas Flow Rates 11.7.7
Inert Gas Generation and Storage Systems 11.7.5, A.11.7.5
Inert Gas Introduction and Starting the Production Line 11.7.10
Inert Gas Piping System 11.7.8
Oven Construction and Location 11.7.4
Oven Design 11.7.3
Oven Shutdown and Entry 11.7.12
Production Running 11.7.11, A.11.7.11
Safety Equipment and Application 11.7.9
Vaporizers Used for Liquefied Purging Fluids 11.7.6
Safety Ventilation for Class A Ovens 11.6
Batch Process Ovens 11.6.9, A.11.6.9
Methods for Determining Solvent Safety Ventilation Rate 11.6.9.3, A.11.6.9.3
Solvent Vapor Ventilation 11.6.9.1, A.11.6.9.1
Ventilation LFL Correction Factor 11.6.9.2
Continuous Process Ovens 11.6.8, A.11.6.8
LFL Correction Factor 11.6.8.3, A.11.6.8.3
Methods for Determining Solvent Safety Ventilation Rate 11.6.8.4, A.11.6.8.4
Rate of Solvent Vapor Ventilation 11.6.8.1, A.11.6.8.1
Continuous Vapor Concentration High Limits and Controllers 11.6.10
Determination and Calculation of Required Safety Ventilation Corrections for Temperature and Altitude 11.6.5, A.11.6.5
Altitude Correction Factor 11.6.5.2
Temperature Correction Factors 11.6.5.1

Copyright 2014 National Fire Protection Association (NFPA). Licensed, by agreement, for individual use and download on October 4, 2014 to LEADER and READER for designated user PATTARAPORN SRITRAKOOL. No other reproduction or transmission in any form permitted without written permission of NFPA. For inquires or to report unauthorized use, contact licensing@nfpa.org.

Fresh Air Supply and Exhaust 11.6.4
General Safety Ventilation Requirements 11.6.1
Heat Recovery and Pollution Control Devices 11.6.3
Interlocks 11.6.2
Method for Calculating Ventilation Rate for Powder Curing Ovens 11.6.7, A.11.6.7
Method for Calculating Ventilation Rate for Products of Combustion 11.6.6
Class B Ovens and Furnaces ..... Chap. 12
Commissioning, Operations, Maintenance, Inspection, and Testing. (Reserved) 12.4
Fire Protection. (Reserved) 12.6
General. (Reserved) 12.1
Heating Systems. (Reserved) 12.3
Location and Construction. (Reserved) 12.2
Safety Equipment 12.5
Ventilation of Class B Ovens and Furnaces 12.5.1, A.12.5.1
Class D Furnaces ..... Chap. 14
Commissioning, Operations, Maintenance, Inspection, and Testing (Reserved) 14.4
General (Reserved) 14.1
Heating Systems (Reserved) 14.3
Location and Construction 14.2
Furnace Thermal Insulation and Heat Shields for Vacuum Furnaces 14.2.10, A.14.2.10
Gas Quenching Systems for Vacuum Furnaces 14.2.5, A.14.2.5
Internal Heat Exchanger 14.2.5.2
Heat Baffles and Reflectors for Vacuum Furnaces 14.2.8
Heating Elements for Vacuum Furnaces 14.2.9
Pump Vents 14.2.7
Vacuum Gauges and Controls 14.2.2
Vacuum Piping Systems 14.2.3
Vacuum Pumping Systems 14.2.6, A.14.2.6
Water-Cooling Systems for Vacuum Furnaces 14.2.4
Safety Equipment 14.5
Bulk Atmosphere Gas Storage Systems — Construction 14.5.4, A.14.5.4
Fire Protection 14.5.6
Integral Liquid Quench Vacuum Furnaces 14.5.2
Construction of Quenching Tanks 14.5.2.2
Cooling Systems 14.5.2.4
External Air-Cooled Heat Exchanger System 14.5.2.4.4
External Liquid-Cooled Heat Exchanger 14.5.2.4.3
Heat Exchanger Within Quench Tank 14.5.2.4.2
Electric Immersion Heaters 14.5.2.5
Elevators 14.5.2.3
General Requirements 14.5.2.1, A.14.5.2.1
Internal Quench Vacuum Furnaces — Additional Safety Controls 14.5.2.6
Vacuum Furnace Safety Controls and Equipment 14.5.1
Electron Beam Melter Safety Controls 14.5.1.7
Vacuum Furnaces Used with Special Flammable Atmospheres 14.5.3
Emergency Shutdown Procedure 14.5.3.4, A.14.5.3.4
Flammable Gases 14.5.3.2
Purging 14.5.3.3
Safety Controls and Equipment 14.5.3.1
Flammable Gas Supply 14.5.3.1.3
Vacuum Induction Furnaces 14.5.5
Design and Construction 14.5.5.1
Heating Systems 14.5.5.2, A.14.5.5.2
Safety Controls 14.5.5.3
Combustion Safeguard
Definition 3.3.11
Commissioning, Operations, Maintenance, Inspection, and Testing ..... Chap. 7
Commissioning 7.1
Inspection, Testing, and Maintenance 7.4
Safety Shutoff Valve Replacement 7.4.10
Operations 7.3
Procedures 7.6, A.7.6
Record Retention 7.5
Training 7.2
Continuous Solvent Vapor Concentration Indicator and Controller ..... Annex E
Controller
Continuous Vapor Concentration Controller
Definition 3.3.12.1
Continuous Vapor Concentration High-Limit Controller
Definition 3.3.12.2
Definition 3.3.12
Programmable Controller
Definition 3.3.12.3
Temperature Controller
Definition 3.3.12.4
Cryogenic Fluid
Definition 3.3.13, A.3.3.13
Cut-Away Damper
Definition 3.3.14, A.3.3.14

-D-

Definitions ..... Chap. 3
Design Standard References ..... Annex L
Direct-Fired Air Makeup Unit
Definition 3.3.15

-E-

Engineering Data ..... Annex J
Example of Class A Furnace Operational and Maintenance Checklist ..... Annex B
Example of Class A or Class B Furnace Operational and Maintenance Checklist ..... Annex C
Example of Class C Furnace Operational and Maintenance Checklist ..... Annex G
Explanatory Material ..... Annex A
Explosion-Resistant (Radiant Tube)
Definition 3.3.16, A.3.3.16

-F-

Fire Protection ..... Chap. 9
Drawings and Calculations 9.4
General 9.1, A.9.1
Inspection, Testing, and Maintenance of Fire Protection Equipment 9.6
Means of Access 9.5
Special Considerations 9.3
Types of Fire Protection Systems 9.2, A.9.2
Flame Arrester
Definition 3.3.17
Flame Detector
Definition 3.3.18
Flame Failure Response Time (FFRT)
Definition 3.3.19
Flame Propagation Rate
Definition 3.3.20, A.3.3.20
Flame Rod
Definition 3.3.21, A.3.3.21
Flammable Limits
Definition 3.3.22, A.3.3.22
Fuel Gas
Definition 3.3.23
Fuel Gas System
Definition 3.3.24
High Pressure Fuel Gas System
Definition 3.3.24.1
Low Pressure or Atmospheric Fuel Gas System
Definition 3.3.24.2
Fuel Oil
Definition 3.3.25
Fume Incinerator
Definition 3.3.26

Copyright 2014 National Fire Protection Association (NFPA). Licensed, by agreement, for individual use and download on October 4, 2014 to LEADER and READER for designated user PATTARAPORN SRITRAKOOL. No other reproduction or transmission in any form permitted without written permission of NFPA. For inquires or to report unauthorized use, contact licensing@nfpa.org.

Furnace
Atmosphere Furnace
Definition 3.3.27.1
Batch Furnace
Definition 3.3.27.2
Class A Furnace
Definition 3.3.27.3, A.3.3.27.3
Class B Furnace
Definition 3.3.27.4, A.3.3.27.4
Class C Furnace
Definition 3.3.27.5, A.3.3.27.5
Class D Furnace
Definition 3.3.27.6, A.3.3.27.6
Continuous Furnace
Definition 3.3.27.7
Definition 3.3.27
Molten Salt Bath Furnace
Definition 3.3.27.8
Plasma Arc Furnace
Definition 3.3.27.9
Furnace Heating Systems ..... Chap. 6
Electrically Heated Units 6.6
Electrical Installation 6.6.2, A.6.6.2
Induction and Dielectric Heating Systems 6.6.4
Construction 6.6.4.2
Resistance Heating Systems 6.6.3
Construction 6.6.3.2
Safety Equipment 6.6.1
Flue Product Venting 6.5
Fluid Heating Systems 6.7, A.6.7
General 6.7.1
Safety Devices 6.7.2
Fuel Gas–Fired Units 6.2, A.6.2
Air–Fuel Gas Mixers 6.2.9
General 6.2.9.1, A.6.2.9.1
Mixing Machines 6.2.9.3
Proportional Mixing 6.2.9.2
Combustion Air 6.2.2, A.6.2.2
Control of Contaminants 6.2.5
Dual-Fuel and Combination Burners 6.2.12
Equipment Fuel Gas Piping 6.2.4
Equipment Isolation Valves 6.2.4.1
Piping and Fittings 6.2.4.2, A.6.2.4.2
Flow Control Valves 6.2.8
Fuel Gas Burners 6.2.10
Fuel Gas Supply Piping 6.2.3
Fuel Ignition 6.2.11
General 6.2.1
Overpressure Protection 6.2.7
Pressure Regulators, Pressure Relief Valves, and Pressure Switches 6.2.6
General 6.1
Oil-Fired Units 6.3, A.6.3
Combustion Air 6.3.2, A.6.3.2
Dual-Fuel and Combination Burners 6.3.9
Equipment Oil Piping 6.3.4
Manual Shutoff Valves 6.3.4.1
Oil Filters and Strainers 6.3.4.3, A.6.3.4.3
Piping and Fittings 6.3.4.2
Pressure Gauges 6.3.4.5, A.6.3.4.5
Pressure Regulation 6.3.4.4
Flow Control Valves 6.3.5
Fuel Ignition 6.3.8
General 6.3.1
Oil Atomization 6.3.6
Oil Burners 6.3.7
Oil Supply Piping 6.3.3
Oxygen-Enhanced Fuel-Fired Units 6.4, A.6.4
Combustion Systems Utilizing Oxygen 6.4.2
General 6.4.1
Oxygen Flow Control Valves 6.4.4
Oxygen Piping and Components 6.4.3
Oxygen-Enriched Combustion Air 6.4.5

-G-

Gas
Ballast Gas
Definition 3.3.28.1
Definition 3.3.28
Inert Gas
Definition 3.3.28.2
Reaction Gas
Definition 3.3.28.3
Gas Analyzer
Definition 3.3.29
Gas Quenching
Definition 3.3.30, A.3.3.30
High Pressure Gas Quenching
Definition 3.3.30.1
General ..... Chap. 4
Approvals, Plans, and Specifications 4.1, A.4.1
Electrical 4.1.3
Pressure Vessels 4.3
Safety Labeling 4.2
Guarded
Definition 3.3.31

-H-

Hardwired
Definition 3.3.32, A.3.3.32
Heating System
Definition 3.3.33
Dielectric Heating System
Definition 3.3.33.1, A.3.3.33.1
Direct-Fired External Heating System
Definition 3.3.33.2
Direct-Fired Heating System
Definition 3.3.33.3, A.3.3.33.3
Direct-Fired Internal Heating System
Definition 3.3.33.4
Indirect-Fired Heating System
Definition 3.3.33.5
Indirect-Fired Internal Heating System
Definition 3.3.33.6, A.3.3.33.6
Induction Heating System
Definition 3.3.33.7, A.3.3.33.7
Radiant Tube Heating System
Definition 3.3.33.8
Resistance Heating System
Definition 3.3.33.9, A.3.3.33.9
Tubular Heating System
Definition 3.3.33.10

-I-

Ignition Temperature
Definition 3.3.34
Implosion
Definition 3.3.35, A.3.3.35
Informational References ..... Annex M
Interlock
1400°F (760°C) Bypass Interlock
Definition 3.3.36.1
Definition 3.3.36
Excess Temperature Limit Interlock
Definition 3.3.36.2
Proved Low-Fire Start Interlock
Definition 3.3.36.3
Safety Interlock
Definition 3.3.36.4

Copyright 2014 National Fire Protection Association (NFPA). Licensed, by agreement, for individual use and download on October 4, 2014 to LEADER and READER for designated user PATTARAPORN SRITRAKOOL. No other reproduction or transmission in any form permitted without written permission of NFPA. For inquires or to report unauthorized use, contact licensing@nfpa.org.

-L-

Labeled
Definition ... 3.2.3
Limiting Oxidant Concentration (LOC)
Definition ... 3.3.37, A.3.3.37
Listed
Definition ... 3.2.4, A.3.2.4
LOC
Definition ... 3.3.38
Location and Construction ... Chap. 5
Explosion Relief ... 5.3, A.5.3
Furnace Design ... 5.2
Location ... 5.1
Floors and Clearances ... 5.1.4
General ... 5.1.1
Location in Regard to Stock, Processes, and Personnel ... 5.1.3
Structural Members of the Building ... 5.1.2
Mountings and Auxiliary Equipment ... 5.5
External Heat Exchangers ... 5.5.5
Fans and Motors for Gas Quenching Systems ... 5.5.6
Quenching Gas ... 5.5.7
Ventilation and Exhaust System ... 5.4, A.5.4
Building Makeup Air ... 5.4.1, A.5.4.1
Ductwork ... 5.4.3
Fans and Motors ... 5.4.2
Lower Flammable Limit (LFL)
Definition ... 3.3.39

-M-

Mixer
Air–Fuel Gas Mixer
Definition ... 3.3.40.1
Air Jet Mixer
Definition ... 3.3.40.2, A.3.3.40.2
Definition ... 3.3.40
Gas Jet Mixer [Atmospheric Inspirator (Venturi) Mixer]
Definition ... 3.3.40.3
Proportional Mixer
Definition ... 3.3.40.4
Mixing Blower
Definition ... 3.3.41
Mixing Machine
Definition ... 3.3.42
Molten Bath Salt
Definition ... 3.3.43
Muffle
Definition ... 3.3.44

-O-

Oil Separator
Definition ... 3.3.45
Operator
Definition ... 3.3.46
Outgassing
Definition ... 3.3.47
Oven
Definition ... 3.3.48
Low-Oxygen Oven
Definition ... 3.3.48.1, A.3.3.48.1
Oxidizer
Catalytic Oxidizer
Definition ... 3.3.49.1
Definition ... 3.3.49
Thermal Oxidizer
Definition ... 3.3.49.2

-P-

Partial Pressure
Definition ... 3.3.50
Pilot
Burn-off Pilot
Definition ... 3.3.51.1
Continuous Pilot
Definition ... 3.3.51.2
Definition ... 3.3.51
Flame Curtain Pilot
Definition ... 3.3.51.3
Intermittent Pilot
Definition ... 3.3.51.4
Interrupted Pilot
Definition ... 3.3.51.5
Proved Pilot
Definition ... 3.3.51.6
Pipe Burner
Definition ... 3.3.52
Plasma Arc
Definition ... 3.3.53
Pressure Regulator
Definition ... 3.3.54
Line Pressure Regulator
Definition ... 3.3.54.1
Monitoring Pressure Regulator
Definition ... 3.3.54.2
Series Pressure Regulator
Definition ... 3.3.54.3
Service Pressure Regulator
Definition ... 3.3.54.4
Pressure Relief Valve
Definition ... 3.3.55
Pump
Definition ... 3.3.56
Diffusion Pump
Definition ... 3.3.56.1
Gas Ballast Pump
Definition ... 3.3.56.2
Holding Pump
Definition ... 3.3.56.3
Rotary Blower Pump
Definition ... 3.3.56.4
Roughing Pump
Definition ... 3.3.56.5, A.3.3.56.5
Vacuum Pump
Definition ... 3.3.56.6
Pump Data ... Annex I
Pump-Down Factor
Definition ... 3.3.57
Pump Fluid
Definition ... 3.3.58
Purge
Definition ... 3.3.59

-R-

Readily Accessible
Definition ... 3.3.60
Referenced Publications ... Chap. 2
General ... 2.1
NFPA Publications ... 2.2
Other Publications ... 2.3
References for Extracts in Mandatory Sections ... 2.4
Roughing Line
Definition ... 3.3.61

-S-

Safe-Start Check
Definition ... 3.3.62, A.3.3.62
Safety Device
Definition ... 3.3.63, A.3.3.63
Safety Equipment and Application ... Chap. 8
1400°F (760°C) Bypass Interlock ... 8.17

Copyright 2014 National Fire Protection Association (NFPA). Licensed, by agreement, for individual use and download on October 4, 2014 to LEADER and READER for designated user PATTARAPORN SRITRAKOOL. No other reproduction or transmission in any form permitted without written permission of NFPA. For inquires or to report unauthorized use, contact licensing@nfpa.org.

Air–Fuel Gas Mixing Machines 8.14
Burner Management System Logic 8.3, A.8.3
General 8.3.1
Combustion Air Safety Devices 8.7
Electrical Heating Systems 8.18
Excess Temperature Limit Interlock 8.18.2, A.8.18.2
Heating Equipment Controls 8.18.1
Excess Temperature Limit Interlock 8.16, A.8.16
Flame Supervision 8.10
Fluid-Heated Systems — Excess Temperature Limit Interlock 8.19, A.8.19
Fuel Oil Atomization (Other Than Mechanical Atomization) 8.11
Fuel Oil Temperature Limit Devices 8.12, A.8.12
Fuel Pressure Switches (Gas or Oil) 8.9, A.8.9
General 8.1, A.8.1
Multiple-Fuel Systems 8.13
Oxygen Safety Devices 8.15
Oxygen-Enriched Burners 8.15.9
Programmable Logic Controller Systems 8.4, A.8.4
Safety PLCs 8.4.4, A.8.4.4
Safety Control Application for Fuel-Fired Heating Systems 8.5
Ignition of Main Burners — Fuel Gas or Oil 8.5.3
Pre-ignition (Prepurge, Purging Cycle) 8.5.1
Trial-for-Ignition Period 8.5.2, A.8.5.2
Safety Device Requirements 8.2
Safety Shutoff Valves (Fuel Gas or Oil) 8.8
Fuel Gas Safety Shutoff Valves 8.8.2
General 8.8.1
Oil Safety Shutoff Valves 8.8.3
Ventilation Safety Devices 8.6
Safety Relay
Definition 3.3.64
Safety Shutdown
Definition 3.3.65
Scf
Definition 3.3.66
Shall
Definition 3.2.5
Should
Definition 3.2.6
Software 8.4.2.1
Special Atmosphere
Carrier Gas Special Atmosphere
Definition 3.3.67.1
Definition 3.3.67
Flammable Special Atmosphere
Definition 3.3.67.2
Generated Special Atmosphere
Definition 3.3.67.3
Indeterminate Special Atmosphere
Definition 3.3.67.4
Inert Special Atmosphere (Purge Gas)
Definition 3.3.67.5
Nonflammable Special Atmosphere
Definition 3.3.67.6
Synthetic Special Atmosphere
Definition 3.3.67.7
Special Atmospheres for Class C Ovens and Furnaces ..... Chap. 13
Commissioning, Operations, Maintenance, Inspection, and Testing (Reserved) 13.4
Fire Protection (Reserved) 13.6
General (Reserved) 13.1
Heating Systems (Reserved) 13.3
Location and Construction (Reserved) 13.2
Safety Equipment 13.5
Ammonia Dissociators 13.5.4, A.13.5.4
Construction 13.5.4.1
Protective Equipment 13.5.4.2
Bulk Storage and Generated Supply Systems for Special Atmospheres 13.5.5, A.13.5.5
General 13.5.5.1
Storage Systems for Special Atmospheres 13.5.5.2
Design Requirements for the Introduction, Use, and Removal of Flammable and Indeterminate Special Atmospheres from Furnaces 13.5.11
Burn-in Requirements 13.5.11.7
Special Requirements for Type VIII and IX Furnaces 13.5.11.7.8
Burn-Off Pilots and Other Ignition Sources 13.5.11.2
Burn-Out Requirements 13.5.11.9
Flame Curtains 13.5.11.3, A.13.5.11.3
Flammable Special Atmosphere Introduction 13.5.11.4
Flammable Special Atmosphere Removal 13.5.11.5
General 13.5.11.1
Purge-in Requirements 13.5.11.6
Positive Furnace Pressure 13.5.11.6.3
Purge-out Requirements 13.5.11.8
Positive Furnace Pressure 13.5.11.8.2
Special Atmosphere Equipment Piping System 13.5.11.10, A.13.5.11.10
Atmosphere Inlets 13.5.11.10.8, A.13.5.11.10.8
Filters 13.5.11.10.5
Flowmeters 13.5.11.10.6
General 13.5.11.10.1
Manual Shutoff Valves and Equipment Isolation 13.5.11.10.2
Pressure Gauges 13.5.11.10.7
Regulators 13.5.11.10.3
Relief Valves 13.5.11.10.4
Special Atmosphere Safety Equipment 13.5.11.11
Emergency Inert Gas Purge 13.5.11.11.13
Flammable Special Atmosphere Safety Shutoff Valves 13.5.11.11.12
Flammable Special Atmosphere Safety Shutoff Valves — General 13.5.11.11.11
Operating Precautions for Heating Cover–Type Furnaces 13.5.11.11.17
Removal of Flammable Special Atmospheres 13.5.11.11.10
Special Atmosphere Flow Interlocks 13.5.11.11.14
Endothermic Generators — Protective Equipment 13.5.3, A.13.5.3
Exothermic Generators 13.5.2, A.13.5.2
Protective Equipment 13.5.2.2
Use of Copper 13.5.2.1, A.13.5.2.1
Flow Control of Special Atmospheres 13.5.7
Integral Quench Furnaces 13.5.13
Cooling Chamber Design 13.5.13.2
Elevator Design 13.5.13.3, A.13.5.13.3
Lower Quench Chamber or Tank 13.5.13.4
Overflow Drains 13.5.13.5
Quench Medium Cooling Systems 13.5.13.6, A.13.5.13.6
External Air-Cooled Heat Exchanger 13.5.13.6.3
External Liquid-Cooled Heat Exchanger 13.5.13.6.2
Quench Tank Heating Controls 13.5.13.8
Electric Immersion Heaters 13.5.13.8.2
Fuel-Fired Immersion Heaters 13.5.13.8.1
Quench Tank Protective Features 13.5.13.7, A.13.5.13.7
Quench Vestibule 13.5.13.1
Molten Salt Bath Equipment 13.5.15, A.13.5.15
Cooling 13.5.15.7
Heating Systems 13.5.15.3
Electrical Heating Systems 13.5.15.3.3
Gas and Oil Heating Systems 13.5.15.3.2
General 13.5.15.3.1
Internal Quenching Salt Tanks 13.5.15.6
General 13.5.15.6.1, A.13.5.15.6.1
High Temperature Salt Bath Quench Tanks 13.5.15.6.4
Low Temperature Salt Quench Tanks 13.5.15.6.5
Safety Control Equipment — Type SIII 13.5.15.6.3
Safety Control Equipment — Type SI and Type SII 13.5.15.6.2

Copyright 2014 National Fire Protection Association (NFPA). Licensed, by agreement, for individual use and download on October 4, 2014 to LEADER and READER for designated user PATTARAPORN SRITRAKOOL. No other reproduction or transmission in any form permitted without written permission of NFPA. For inquires or to report unauthorized use, contact licensing@nfpa.org.

Location and Construction 13.5.15.1
Construction 13.5.15.1.2
Location 13.5.15.1.1
Operator Precautions 13.5.15.8, A.13.5.15.8
Precautions 13.5.15.9
Safety Control Equipment 13.5.15.5
Electrically Heated Salt Bath Equipment 13.5.15.5.2
General 13.5.15.5.1
Salts 13.5.15.2
General 13.5.15.2.1
Storage and Handling 13.5.15.2.2
Ventilation 13.5.15.4
Exhaust 13.5.15.4.2
Hoods 13.5.15.4.1, A.13.5.15.4.1
Open Liquid Quench Tanks 13.5.14, A.13.5.14
Construction 13.5.14.2
Emergency Drains 13.5.14.2.6
Location 13.5.14.2.3
Overflow Pipes 13.5.14.2.5
Tank Features 13.5.14.2.4
Equipment 13.5.14.3
Hoods 13.5.14.3.4
Low Oil Level Sensor 13.5.14.3.3
Temperature Control of Liquids 13.5.14.3.2
Transfer 13.5.14.3.1
Location 13.5.14.1
Piping Systems for Special Atmospheres 13.5.9
Requirements for Special Atmospheres 13.5.1
Special Atmospheres and Furnaces as Classified in 13.5.11 ..... 13.5.10, A.13.5.10
Automatic Cycling 13.5.10.2
Furnace Type 13.5.10.3
Indeterminate Atmospheres 13.5.10.1
Special Processing Gas Atmosphere Gas Mixing Systems 13.5.6, A.13.5.6
Synthetic Atmosphere Flow Control 13.5.8
Timed Flow Purge Method for Type I Through Type IX Furnaces 13.5.12, A.13.5.12
Failure to Verify Timed Flow Purge Effectiveness 13.5.12.4
Future Purge Verifications 13.5.12.3, A.13.5.12.3
Purging After Failure of Atmospheric Circulation 13.5.12.1, A.13.5.12.1
Timed Flow Purging Trials 13.5.12.2
Standard
Definition 3.2.7
Steam Extinguishing Systems ..... Annex F
Supervised Flame
Definition 3.3.68
Switch
Closed Position Indicator Switch
Definition 3.3.69.1
Definition 3.3.69
Differential Flow Switch
Definition 3.3.69.2
Flow Switch
Definition 3.3.69.3
Limit Switch
Definition 3.3.69.4
Manual Emergency Switch
Definition 3.3.69.5
Pressure Switch
Definition 3.3.69.6
Proof-of-Closure Switch
Definition 3.3.69.7, A.3.3.69.7
Rotational Switch
Definition 3.3.69.8

-T-

Tank
Definition 3.3.70
Integral Liquid or Salt Media Quench-Type Tank
Definition 3.3.70.1
Open Liquid or Salt Media Quench-Type Tank
Definition 3.3.70.2
The Lower Limit of Flammability and the Autogenous Ignition Temperature of Certain Common Solvent Vapors Encountered in Ovens ..... Annex D
Thermal Oxidizer ..... Chap. 10
Commissioning, Operations, Maintenance, Inspection, and Testing (Reserved) 10.4
Fire Protection (Reserved) 10.5
General 10.1
Heating Systems (Reserved) 10.3
Location and Construction 10.2
Direct Fuel Injection Systems 10.2.3, A.10.2.3
Safety Equipment and Application 10.6
Catalytic Fume Incinerators 10.6.4, A.10.6.4
Direct Heat Recovery Systems 10.6.3
Direct-Fired Fume Incinerators 10.6.2, A.10.6.2
Time
Definition 3.3.71
Evacuation Time
Definition 3.3.71.1
Roughing Time
Definition 3.3.71.2
Trial-for-Ignition Period (Flame-Establishing Period)
Definition 3.3.72

-V-

Vacuum
Definition 3.3.73
High Vacuum
Definition 3.3.73.1
Low Vacuum
Definition 3.3.73.2
Vacuum Furnace Maintenance Checklist ..... Annex H
Vacuum Gauge
Definition 3.3.74
Vacuum Pumping System
Definition 3.3.75
Vacuum Symbols ..... Annex K
Vacuum System
Definition 3.3.76
Vacuum-Type Insulation
Definition 3.3.77
Valve
Air Inlet Valve
Definition 3.3.78.1
Definition 3.3.78
Emergency Shutoff Valve
Definition 3.3.78.4
Equipment Isolation Valve
Definition 3.3.78.3
Safety Shutoff Valve
Definition 3.3.78.2, A.3.3.78.2
Valve Proving System
Definition 3.3.79, A.3.3.79
Vent Limiter
Definition 3.3.80
Ventilation
Definition 3.3.81
Safety Ventilation
Definition 3.3.81.1, A.3.3.81.1

-W-

Water-Cooling System for Vacuum Furnaces
Definition 3.3.82

Copyright 2014 National Fire Protection Association (NFPA). Licensed, by agreement, for individual use and download on October 4, 2014 to LEADER and READER for designated user PATTARAPORN SRITRAKOOL. No other reproduction or transmission in any form permitted without written permission of NFPA. For inquires or to report unauthorized use, contact licensing@nfpa.org.

Formal Interpretation

NFPA 86

Standard for Ovens and Furnaces

2015 Edition

Reference: 3.3.69.7
F.I. No.: 86-07-1

Question 1: Is a listed safety shutoff valve with proof-of-closure switch compliant with NFPA 86 when the proof-of-closure switch is enclosed under a cover plate affixed with standard head screws?

Answer: Yes.

Question 2: Is a listed safety shutoff valve with proof-of-closure switch compliant with NFPA 86 when its proof-of-closure switch is capable of being replaced in the field?

Answer: Yes.

Committee Statement: Some safety shutoff valves required by NFPA 86 are to include proof-of-closure switches. The definition of "Proof-of-Closure Switch" includes "non–field adjustable" as one characteristic of the switch. Some listed safety shutoff valves have proof-of-closure switches that can be accessed by removing a cover plate affixed with standard head screws. Some "listed" safety shutoff valves have proof-of-closure switches that can be replaced and adjusted as part of field servicing activities. In each case, the proof-of-closure switch is not accessible to an operator for field adjustment, but the proof-of-closure switch can be accessed by deliberate disassembly of the valve for service activity. In accordance with the standard, all safety devices require periodic testing and maintenance in accordance with published manufacturer's instructions.

Issue Edition: 2007
Reference: 3.3.64.9
Issue Date: September 22, 2006
Effective Date: October 12, 2006

Copyright © 2014 All Rights Reserved
NATIONAL FIRE PROTECTION ASSOCIATION

Copyright 2014 National Fire Protection Association (NFPA). Licensed, by agreement, for individual use and download on October 4, 2014 to LEADER and READER for designated user PATTARAPORN SRITRAKOOL. No other reproduction or transmission in any form permitted without written permission of NFPA. For inquires or to report unauthorized use, contact licensing@nfpa.org.

Sequence of Events for the Standards Development Process

As soon as the current edition is published, a Standard is open for Public Input

Step 1: Input Stage

- Input accepted from the public or other committees for consideration to develop the First Draft
- Committee holds First Draft Meeting to revise Standard (23 weeks)
  Committee(s) with Correlating Committee (10 weeks)
- Committee ballots on First Draft (12 weeks)
  Committee(s) with Correlating Committee (11 weeks)
- Correlating Committee First Draft Meeting (9 weeks)
- Correlating Committee ballots on First Draft (5 weeks)
- First Draft Report posted

Step 2: Comment Stage

- Public Comments accepted on First Draft (10 weeks)
- If Standard does not receive Public Comments and the Committee does not wish to further revise the Standard, the Standard becomes a Consent Standard and is sent directly to the Standards Council for issuance
- Committee holds Second Draft Meeting (21 weeks)
  Committee(s) with Correlating Committee (7 weeks)
- Committee ballots on Second Draft (11 weeks)
  Committee(s) with Correlating Committee (10 weeks)
- Correlating Committee First Draft Meeting (9 weeks)
- Correlating Committee ballots on First Draft (8 weeks)
- Second Draft Report posted

Step 3: Association Technical Meeting

- Notice of Intent to Make a Motion (NITMAM) accepted (5 weeks)
- NITMAMs are reviewed and valid motions are certified for presentation at the Association Technical Meeting
- Consent Standard bypasses Association Technical Meeting and proceeds directly to the Standards Council for issuance
- NFPA membership meets each June at the Association Technical Meeting and acts on Standards with "Certified Amending Motions" (certified NITMAMs)
- Committee(s) and Panel(s) vote on any successful amendments to the Technical Committee Reports made by the NFPA membership at the Association Technical Meeting

Step 4: Council Appeals and Issuance of Standard

- Notification of intent to file an appeal to the Standards Council on Association action must be filed within 20 days of the Association Technical Meeting
- Standards Council decides, based on all evidence, whether or not to issue the Standards or to take other action

Committee Membership Classifications[1,2,3,4]

The following classifications apply to Committee members and represent their principal interest in the activity of the Committee.

1. M *Manufacturer:* A representative of a maker or marketer of a product, assembly, or system, or portion thereof, that is affected by the standard.
2. U *User:* A representative of an entity that is subject to the provisions of the standard or that voluntarily uses the standard.
3. IM *Installer/Maintainer:* A representative of an entity that is in the business of installing or maintaining a product, assembly, or system affected by the standard.
4. L *Labor:* A labor representative or employee concerned with safety in the workplace.
5. RT *Applied Research/Testing Laboratory:* A representative of an independent testing laboratory or independent applied research organization that promulgates and/or enforces standards.
6. E *Enforcing Authority:* A representative of an agency or an organization that promulgates and/or enforces standards.
7. I *Insurance:* A representative of an insurance company, broker, agent, bureau, or inspection agency.
8. C *Consumer:* A person who is or represents the ultimate purchaser of a product, system, or service affected by the standard, but who is not included in (2).
9. SE *Special Expert:* A person not representing (1) through (8) and who has special expertise in the scope of the standard or portion thereof.

NOTE 1: "Standard" connotes code, standard, recommended practice, or guide.

NOTE 2: A representative includes an employee.

NOTE 3: While these classifications will be used by the Standards Council to achieve a balance for Technical Committees, the Standards Council may determine that new classifications of member or unique interests need representation in order to foster the best possible Committee deliberations on any project. In this connection, the Standards Council may make such appointments as it deems appropriate in the public interest, such as the classification of "Utilities" in the National Electrical Code Committee.

NOTE 4: Representatives of subsidiaries of any group are generally considered to have the same classification as the parent organization.

Copyright 2014 National Fire Protection Association (NFPA). Licensed, by agreement, for individual use and download on October 4, 2014 to LEADER and READER for designated user PATTARAPORN SRITRAKOOL. No other reproduction or transmission in any form permitted without written permission of NFPA. For inquires or to report unauthorized use, contact licensing@nfpa.org.

Submitting Public Input / Public Comment through the Electronic Submission System (e-Submission):

As soon as the current edition is published, a Standard is open for Public Input.

Before accessing the e-Submission System, you must first sign-in at www.NFPA.org. *Note: You will be asked to sign-in or create a free online account with NFPA before using this system*:

a. Click in the gray Sign In box on the upper left side of the page. Once signed-in, you will see a red "Welcome" message in the top right corner.
b. Under the Codes and Standards heading, Click on the Document Information pages (List of Codes & Standards), and then select your document from the list or use one of the search features in the upper right gray box.

OR

a. Go directly to your specific document page by typing the convenient short link of www.nfpa.org/document#, (Example: NFPA 921 would be www.nfpa.org/921) Click in the gray Sign In box on the upper left side of the page. Once signed in, you will see a red "Welcome" message in the top right corner.

To begin your Public Input, select the link The next edition of this standard is now open for Public Input (formally "proposals") located on the Document Information tab, the Next Edition tab, or the right-hand Navigation bar. Alternatively, the Next Edition tab includes a link to Submit Public Input online

At this point, the NFPA Standards Development Site will open showing details for the document you have selected. This "Document Home" page site includes an explanatory introduction, information on the current document phase and closing date, a left-hand navigation panel that includes useful links, a document Table of Contents, and icons at the top you can click for Help when using the site. The Help icons and navigation panel will be visible except when you are actually in the process of creating a Public Input.

Once the First Draft Report becomes available there is a Public comment period during which anyone may submit a Public Comment on the First Draft. Any objections or further related changes to the content of the First Draft must be submitted at the Comment stage.

To submit a Public Comment you may access the e-Submission System utilizing the same steps as previous explained for the submission of Public Input.

For further information on submitting public input and public comments, go to: http://www.nfpa.org/publicinput

Other Resources available on the Doc Info Pages

Document information tab: Research current and previous edition information on a Standard

Next edition tab: Follow the committee's progress in the processing of a Standard in its next revision cycle.

Technical committee tab: View current committee member rosters or apply to a committee

Technical questions tab: For members and Public Sector Officials/AHJs to submit questions about codes and standards to NFPA staff. Our Technical Questions Service provides a convenient way to receive timely and consistent technical assistance when you need to know more about NFPA codes and standards relevant to your work. Responses are provided by NFPA staff on an informal basis.

Products/training tab: List of NFPA's publications and training available for purchase.

Community tab: Information and discussions about a Standard

Copyright 2014 National Fire Protection Association (NFPA). Licensed, by agreement, for individual use and download on October 4, 2014 to LEADER and READER for designated user PATTARAPORN SRITRAKOOL. No other reproduction or transmission in any form permitted without written permission of NFPA. For inquires or to report unauthorized use, contact licensing@nfpa.org.

Information on the NFPA Standards Development Process

I. Applicable Regulations. The primary rules governing the processing of NFPA standards (codes, standards, recommended practices, and guides) are the NFPA *Regulations Governing the Development of NFPA Standards (Regs)*. Other applicable rules include NFPA *Bylaws*, NFPA *Technical Meeting Convention Rules*, NFPA *Guide for the Conduct of Participants in the NFPA Standards Development Process*, and the NFPA *Regulations Governing Petitions to the Board of Directors from Decisions of the Standards Council*. Most of these rules and regulations are contained in the *NFPA Standards Directory*. For copies of the *Directory*, contact Codes and Standards Administration at NFPA Headquarters; all these documents are also available on the NFPA website at "www.nfpa.org."

The following is general information on the NFPA process. All participants, however, should refer to the actual rules and regulations for a full understanding of this process and for the criteria that govern participation.

II. Technical Committee Report. The Technical Committee Report is defined as "the Report of the responsible Committee(s), in accordance with the Regulations, in preparation of a new or revised NFPA Standard." The Technical Committee Report is in two parts and consists of the First Draft Report and the Second Draft Report. (See *Regs* at 1.4)

III. Step 1: First Draft Report. The First Draft Report is defined as "Part one of the Technical Committee Report, which documents the Input Stage." The First Draft Report consists of the First Draft, Public Input, Committee Input, Committee and Correlating Committee Statements, Correlating Input, Correlating Notes, and Ballot Statements. (See *Regs* at 4.2.5.2 and Section 4.3) Any objection to an action in the First Draft Report must be raised through the filing of an appropriate Comment for consideration in the Second Draft Report or the objection will be considered resolved. [See *Regs* at 4.3.1(b)]

IV. Step 2: Second Draft Report. The Second Draft Report is defined as "Part two of the Technical Committee Report, which documents the Comment Stage." The Second Draft Report consists of the Second Draft, Public Comments with corresponding Committee Actions and Committee Statements, Correlating Notes and their respective Committee Statements, Committee Comments, Correlating Revisions, and Ballot Statements. (See *Regs* at Section 4.2.5.2 and 4.4) The First Draft Report and the Second Draft Report together constitute the Technical Committee Report. Any outstanding objection following the Second Draft Report must be raised through an appropriate Amending Motion at the Association Technical Meeting or the objection will be considered resolved. [See *Regs* at 4.4.1(b)]

V. Step 3a: Action at Association Technical Meeting. Following the publication of the Second Draft Report, there is a period during which those wishing to make proper Amending Motions on the Technical Committee Reports must signal their intention by submitting a Notice of Intent to Make a Motion. (See *Regs* at 4.5.2) Standards that receive notice of proper Amending Motions (Certified Amending Motions) will be presented for action at the annual June Association Technical Meeting. At the meeting, the NFPA membership can consider and act on these Certified Amending Motions as well as Follow-up Amending Motions, that is, motions that become necessary as a result of a previous successful Amending Motion. (See 4.5.3.2 through 4.5.3.6 and Table1, Columns 1-3 of *Regs* for a summary of the available Amending Motions and who may make them.) Any outstanding objection following action at an Association Technical Meeting (and any further Technical Committee consideration following successful Amending Motions, see *Regs* at 4.5.3.7 through 4.6.5.3) must be raised through an appeal to the Standards Council or it will be considered to be resolved.

VI. Step 3b: Documents Forwarded Directly to the Council. Where no Notice of Intent to Make a Motion (NITMAM) is received and certified in accordance with the Technical Meeting Convention Rules, the standard is forwarded directly to the Standards Council for action on issuance. Objections are deemed to be resolved for these documents. (See *Regs* at 4.5.2.5)

VII. Step 4a: Council Appeals. Anyone can appeal to the Standards Council concerning procedural or substantive matters related to the development, content, or issuance of any document of the Association or on matters within the purview of the authority of the Council, as established by the *Bylaws* and as determined by the Board of Directors. Such appeals must be in written form and filed with the Secretary of the Standards Council (See *Regs* at 1.6). Time constraints for filing an appeal must be in accordance with 1.6.2 of the *Regs*. Objections are deemed to be resolved if not pursued at this level.

VIII. Step 4b: Document Issuance. The Standards Council is the issuer of all documents (see Article 8 of *Bylaws*). The Council acts on the issuance of a document presented for action at an Association Technical Meeting within 75 days from the date of the recommendation from the Association Technical Meeting, unless this period is extended by the Council (See *Regs at* 4.7.2). For documents forwarded directly to the Standards Council, the Council acts on the issuance of the document at its next scheduled meeting, or at such other meeting as the Council may determine (See *Regs* at 4.5.2.5 and 4.7.4).

IX. Petitions to the Board of Directors. The Standards Council has been delegated the responsibility for the administration of the codes and standards development process and the issuance of documents. However, where extraordinary circumstances requiring the intervention of the Board of Directors exist, the Board of Directors may take any action necessary to fulfill its obligations to preserve the integrity of the codes and standards development process and to protect the interests of the Association. The rules for petitioning the Board of Directors can be found in the *Regulations Governing Petitions to the Board of Directors from Decisions of the Standards Council* and in 1.7 of the *Regs*.

X. For More Information. The program for the Association Technical Meeting (as well as the NFPA website as information becomes available) should be consulted for the date on which each report scheduled for consideration at the meeting will be presented. For copies of the First Draft Report and Second Draft Report as well as more information on NFPA rules and for up-to-date information on schedules and deadlines for processing NFPA documents, check the NFPA website (www.nfpa.org/aboutthecodes) or contact NFPA Codes & Standards Administration at (617) 984-7246.

Copyright 2014 National Fire Protection Association (NFPA). Licensed, by agreement, for individual use and download on October 4, 2014 to LEADER and READER for designated user PATTARAPORN SRITRAKOOL. No other reproduction or transmission in any form permitted without written permission of NFPA. For inquires or to report unauthorized use, contact licensing@nfpa.org.

Stay Up-To-Date. Join NFPA® Today!

☑ **YES** Please enroll me as a member of NFPA for the term checked below. Activate all benefits, and ship my *Member Kit* including the *Benefits Guide* and other resources to help me make the most of my NFPA membership.

Please allow three to four weeks for the kit to arrive.

Billing Information:

Name _____ Title _____

Organization _____

Address _____

City _____ State _____ Zip/Postal Code _____

Country _____

Phone _____ E-mail _____

Priority Code: 8J-MIS-1Z

Please Answer The Following Questions:

Job Title *(check one)*

- ❑ Architect, Engineer, Consultant, Contractor (C17)
- ❑ Facilities Safety Officer (F14)
- ❑ Fire Chief, Other Fire Service (A11)
- ❑ Loss Control, Risk Manager (L11)
- ❑ Inspector, Building Official, Fire Marshal (F03)
- ❑ Owner, President, Manager, Administrator (C10)
- ❑ Other (please specify): (G11)_____

Type of Organization *(check one)*

- ❑ Architecture, Engineering, Contracting (A14)
- ❑ Commercial Firm (Office, Retail, Lodging, Restaurant) (G13)
- ❑ Electrical Services, Installation (J11)
- ❑ Fire Service, Public and Private (AA1)
- ❑ Government (C12)
- ❑ Industrial Firm (Factory, Warehouse) (C11)
- ❑ Institutional (Health Care, Education, Detention, Museums) (B11)
- ❑ Insurance, Risk Management (B12)
- ❑ Utilities (G12)
- ❑ Other (please specify): (G11)_____

4 Easy Ways to Join

Fax: 1-800-593-6372, Outside the U.S. +1-508-895-8301
Mail: NFPA Membership Services Center,
11 Tracy Drive, Avon, MA 02322-9908
Online: nfpa.org
Call: 1-800-344-3555
Outside the U.S. call +1-617-770-3000

05/13-D

Terms and Payment:

- ❑ 1 year ($165)
- ❑ 2 years ($300) SAVE $30
- ❑ 3 years ($430) SAVE $65

Annual membership dues include a $45 subscription to *NFPA Journal*®. Regular membership in NFPA is individual and non-transferable. NFPA Journal is a registered trademark of the National Fire Protection Association, Quincy, MA 02169. Voting privileges begin after 180 days of individual membership. Prices subject to change.

Payment Method:

Check One:

- ❑ Payment Enclosed *(Make check payable to NFPA.)*
- ❑ Purchase Order *(Please attach this form to your P.O.)*
- ❑ Bill Me Later *(Not available on International memberships.)*

Charge My: ❑ VISA ❑ MasterCard ❑ AmEx ❑ Discover

Card #_____

Expiration Date _____

Name on Card _____

Signature _____

International members: Please note prepayment is required on all International orders. Be sure to enclose a check or select your preferred credit card option.

100% Money-Back Guarantee

If anytime during your first year you decide membership is not for you, let us know and you'll receive a 100% refund of your dues.

Copyright 2014 National Fire Protection Association (NFPA). Licensed, by agreement, for individual use and download on October 4, 2014 to LEADER and READER for designated user PATTARAPORN SRITRAKOOL. No other reproduction or transmission in any form permitted without written permission of NFPA. For inquires or to report unauthorized use, contact licensing@nfpa.org.

"Member-Only" Benefits
Keeps You Up-To-Date!

FREE! Technical Support — Technical Support by Phone/Email. Get fast, reliable answers to all code-related questions—from electrical safety for employee workplaces to carbon dioxide extinguishing systems—from NFPA's team of fire protection specialists.

NFPA Journal® — THE journal of record for fire protection, this bi-monthly publication will keep you abreast of the latest fire prevention and safety practices, as well as new technologies and strategies for protecting life and property from fire.

NFPA Update — This easy-to-read monthly e-newsletter will keep you up-to-date on important association programs such as the annual meeting; bring you times of interest from NFPA's regional offices; and alert you to nationwide events and opportunities you won't want to miss.

NFPA News — From new standards for dry cleaning plants to warning equipment for household carbon monoxide, this monthly online update keeps you abreast of additions of changes that could impact how you do you work.

NFPA Standards Directory — The NFPA Standards Directory is your complete guide to NFPA's code-making process. Simply access your online NFPA member profile for document revision guidelines, the revision cycle schedule, and forms for submitting Proposals and Comments. Your online NFPA member profile and access to the NFPA Standards Directory is automatically generated once you join NFPA.

FREE! Section Membership — Share YOUR expertise with others in any of 16 industry-specific sections covering your own field of interest.

Member Kit — Includes Membership Certificate, Pin, Decals, ID Card, and Camera-ready Logo Art. Display the NFPA member logo proudly on your business correspondence, literature, website, and vehicles.

10% Discounts — Save hundreds of dollars each year on the many products and services listed in the NFPA Catalog, including codes and standards publications, handbooks, training videos, and other education materials to increase your knowledge and skills.

Voting Rights — Your chance to help shape the future direction of fire prevention codes and standards. Voting rights go into effect 180 days from the start of individual membership.

Conference Invitation— Invitation to the NFPA Conference and Expo. Attend this important meeting at discounted rates as a member of NFPA.

Join NFPA today!
www.nfpa.org

NFPA® and *NFPA Journal*® are registered trademarks of the National Fire Protection Association, Quincy, MA 02169-7471