Copyright 2015 National Fire Protection Association (NFPA). Licensed, by agreement, for individual use and download on June 24, 2015 to LEADER AND READER for designated user PATTARAPORN SRITRAKOOL. No other reproduction or transmission in any form permitted without written permission of NFPA. For inquires or to report unauthorized use, contact licensing@nfpa.org.

NFPA® 850

Recommended Practice for Fire Protection for Electric Generating Plants and High Voltage Direct Current Converter Stations

2015 Edition



NFPA®, 1 Batterymarch Park, Quincy, MA 02169-7471, USA
An International Codes and Standards Organization

Copyright 2015 National Fire Protection Association (NFPA). Licensed, by agreement, for individual use and download on June 24, 2015 to LEADER AND READER for designated user PATTARAPORN SRITRAKOOL. No other reproduction or transmission in any form permitted without written permission of NFPA. For inquires or to report unauthorized use, contact licensing@nfpa.org.

IMPORTANT NOTICES AND DISCLAIMERS CONCERNING NFPA® STANDARDS

NOTICE AND DISCLAIMER OF LIABILITY CONCERNING THE USE OF NFPA STANDARDS

NFPA® codes, standards, recommended practices, and guides ("NFPA Standards"), of which the document contained herein is one, are developed through a consensus standards development process approved by the American National Standards Institute. This process brings together volunteers representing varied viewpoints and interests to achieve consensus on fire and other safety issues. While the NFPA administers the process and establishes rules to promote fairness in the development of consensus, it does not independently test, evaluate, or verify the accuracy of any information or the soundness of any judgments contained in NFPA Standards.

The NFPA disclaims liability for any personal injury, property or other damages of any nature whatsoever, whether special, indirect, consequential or compensatory, directly or indirectly resulting from the publication, use of, or reliance on NFPA Standards. The NFPA also makes no guaranty or warranty as to the accuracy or completeness of any information published herein.

In issuing and making NFPA Standards available, the NFPA is not undertaking to render professional or other services for or on behalf of any person or entity. Nor is the NFPA undertaking to perform any duty owed by any person or entity to someone else. Anyone using this document should rely on his or her own independent judgment or, as appropriate, seek the advice of a competent professional in determining the exercise of reasonable care in any given circumstances.

The NFPA has no power, nor does it undertake, to police or enforce compliance with the contents of NFPA Standards. Nor does the NFPA list, certify, test, or inspect products, designs, or installations for compliance with this document. Any certification or other statement of compliance with the requirements of this document shall not be attributable to the NFPA and is solely the responsibility of the certifier or maker of the statement.

REMINDER: UPDATING OF NFPA STANDARDS

Users of NFPA codes, standards, recommended practices, and guides ("NFPA Standards") should be aware that NFPA Standards may be amended from time to time through the issuance of Tentative Interim Amendments or corrected by Errata. An official NFPA Standard at any point in time consists of the current edition of the document together with any Tentative Interim Amendment and any Errata then in effect.

In order to determine whether an NFPA Standard has been amended through the issuance of Tentative Interim Amendments or corrected by Errata, visit the Document Information Pages on NFPA's website. The Document Information Pages provide up-to-date, document specific information including any issued Tentative Interim Amendments and Errata.

To access the Document Information Page for a specific NFPA Standard, go to http://www.nfpa.org/docinfo to choose from the list of NFPA Standards or use the search feature on the right to select the NFPA Standard number (e.g., NFPA 101). In addition to posting all existing Tentative Interim Amendments and Errata, the Document Information Page also includes the option to sign-up for an "Alert" feature to receive an email notification when new updates and other information are posted regarding the document.

ISBN: 978-145591059-5 (Print)
ISBN: 978-145591105-9 (PDF)

Copyright 2015 National Fire Protection Association (NFPA). Licensed, by agreement, for individual use and download on June 24, 2015 to LEADER AND READER for designated user PATTARAPORN SRITRAKOOL. No other reproduction or transmission in any form permitted without written permission of NFPA. For inquires or to report unauthorized use, contact licensing@nfpa.org.

IMPORTANT NOTICES AND DISCLAIMERS CONCERNING NFPA® STANDARDS

ADDITIONAL NOTICES AND DISCLAIMERS

Updating of NFPA Standards

Users of NFPA codes, standards, recommended practices, and guides ("NFPA Standards") should be aware that these documents may be superseded at any time by the issuance of new editions or may be amended from time to time through the issuance of Tentative Interim Amendments or corrected by Errata. An official NFPA Standard at any point in time consists of the current edition of the document together with any Tentative Interim Amendments and any Errata then in effect. In order to determine whether a given document is the current edition and whether it has been amended through the issuance of Tentative Interim Amendments or corrected through the issuance of Errata, consult appropriate NFPA publications such as the National Fire Codes® Subscription Service, visit the NFPA website at www.nfpa.org, or contact the NFPA at the address listed below.

Interpretations of NFPA Standards

A statement, written or oral, that is not processed in accordance with Section 6 of the Regulations Governing the Development of NFPA Standards shall not be considered the official position of NFPA or any of its Committees and shall not be considered to be, nor be relied upon as, a Formal Interpretation.

Patents

The NFPA does not take any position with respect to the validity of any patent rights referenced in, related to, or asserted in connection with an NFPA Standard. The users of NFPA Standards bear the sole responsibility for determining the validity of any such patent rights, as well as the risk of infringement of such rights, and the NFPA disclaims liability for the infringement of any patent resulting from the use of or reliance on NFPA Standards.

NFPA adheres to the policy of the American National Standards Institute (ANSI) regarding the inclusion of patents in American National Standards ("the ANSI Patent Policy"), and hereby gives the following notice pursuant to that policy:

> **NOTICE:** The user's attention is called to the possibility that compliance with an NFPA Standard may require use of an invention covered by patent rights. NFPA takes no position as to the validity of any such patent rights or as to whether such patent rights constitute or include essential patent claims under the ANSI Patent Policy. If, in connection with the ANSI Patent Policy, a patent holder has filed a statement of willingness to grant licenses under these rights on reasonable and nondiscriminatory terms and conditions to applicants desiring to obtain such a license, copies of such filed statements can be obtained, on request, from NFPA. For further information, contact the NFPA at the address listed below.

Law and Regulations

Users of NFPA Standards should consult applicable federal, state, and local laws and regulations. NFPA does not, by the publication of its codes, standards, recommended practices, and guides, intend to urge action that is not in compliance with applicable laws, and these documents may not be construed as doing so.

Copyrights

NFPA Standards are copyrighted. They are made available for a wide variety of both public and private uses. These include both use, by reference, in laws and regulations, and use in private self-regulation, standardization, and the promotion of safe practices and methods. By making these documents available for use and adoption by public authorities and private users, the NFPA does not waive any rights in copyright to these documents.

Use of NFPA Standards for regulatory purposes should be accomplished through adoption by reference. The term "adoption by reference" means the citing of title, edition, and publishing information only. Any deletions, additions, and changes desired by the adopting authority should be noted separately in the adopting instrument. In order to assist NFPA in following the uses made of its documents, adopting authorities are requested to notify the NFPA (Attention: Secretary, Standards Council) in writing of such use. For technical assistance and questions concerning adoption of NFPA Standards, contact NFPA at the address below.

For Further Information

All questions or other communications relating to NFPA Standards and all requests for information on NFPA procedures governing its codes and standards development process, including information on the procedures for requesting Formal Interpretations, for proposing Tentative Interim Amendments, and for proposing revisions to NFPA standards during regular revision cycles, should be sent to NFPA headquarters, addressed to the attention of the Secretary, Standards Council, NFPA, 1 Batterymarch Park, P.O. Box 9101, Quincy, MA 02269-9101; email: stds_admin@nfpa.org

For more information about NFPA, visit the NFPA website at www.nfpa.org. All NFPA codes and standards can be viewed at no cost at www.nfpa.org/freeaccess.

Copyright 2015 National Fire Protection Association (NFPA). Licensed, by agreement, for individual use and download on June 24, 2015 to LEADER AND READER for designated user PATTARAPORN SRITRAKOOL. No other reproduction or transmission in any form permitted without written permission of NFPA. For inquires or to report unauthorized use, contact licensing@nfpa.org.

Copyright © 2014 National Fire Protection Association®. All Rights Reserved.

NFPA® 850

Recommended Practice for

Fire Protection for Electric Generating Plants and High Voltage Direct Current Converter Stations

2015 Edition

This edition of NFPA 850, *Recommended Practice for Fire Protection for Electric Generating Plants and High Voltage Direct Current Converter Stations*, was prepared by the Technical Committee on Electric Generating Plants. It was issued by the Standards Council on November 11, 2014, with an effective date of December 1, 2014, and supersedes all previous editions.

This edition of NFPA 850 was approved as an American National Standard on December 1, 2014.

Origin and Development of NFPA 850

The Committee on Non-Nuclear Power Generating Plants was organized in 1979 to have primary responsibility for documents on fire protection for non-nuclear electric generating plants. Begun early in 1980, the first edition of NFPA 850 was officially released in 1986 as the *Recommended Practice for Fire Protection for Fossil Fueled Steam Electric Generating Plants.*

The second edition of NFPA 850 was issued in 1990 under the revised title of *Recommended Practice for Fire Protection for Fossil Fueled Steam and Combustion Turbine Electric Generating Plants.* This second edition incorporated a new Chapter 6 on the identification and protection of hazards for combustion turbines.

In 1991 the committee changed its name to the Technical Committee on Electric Generating Plants. This simplified name was made to reflect the committee's scope to cover all types of electric generating plants except nuclear.

The 1992 edition of NFPA 850 incorporated a new Chapter 7 on alternative fuel electric generating plants. As part of these changes, the document title was revised to the *Recommended Practice for Fire Protection for Electric Generating Plants.* Various other technical and editorial changes were also made.

The 1996 edition of the standard added a new Chapter 8 on fire protection for high voltage direct current (HVDC) converter stations. In addition, the title was changed to *Recommended Practice for Fire Protection for Electric Generating Plants and High Voltage Direct Current Converter Stations* to incorporate the new chapter.

The 2000 edition revised the application of the document to apply to existing facilities, as it is a good industry practice. Chapter 2 was reorganized to be specific to a fire risk control program. The document also clarified that a single water tank is not a reliable water supply, the spacing of hydrants, and lock-out of five suppression systems, and additional requirements were added for water mist fire suppression systems.

The 2005 edition of NFPA 850 underwent a complete revision to comply with the *Manual of Style for NFPA Technical Committee Documents.* Chapter 2 now contains mandatory references and Chapter 3 now contains definitions, and the subsequent chapters were renumbered.

Additional changes included revised figures in Chapter 5 that are intended to further clarify existing requirements and the addition of new annex material on fire protection requirements.

The 2010 edition of NFPA 850 included a chapter containing recommendations for a fire protection design process and fire protection design basis documentation (the new Chapter 4). The chapter on fire risk control program was moved to Chapter 16. New chapters on wind turbine generating facilities, solar thermal power generation, geothermal power plants, and integrated gasification combined cycle (IGCC) generating facilities (Chapters 10–13) were added.

NFPA and National Fire Protection Association are registered trademarks of the National Fire Protection Association, Quincy, Massachusetts 02169.

Copyright 2015 National Fire Protection Association (NFPA). Licensed, by agreement, for individual use and download on June 24, 2015 to LEADER AND READER for designated user PATTARAPORN SRITRAKOOL. No other reproduction or transmission in any form permitted without written permission of NFPA. For inquires or to report unauthorized use, contact licensing@nfpa.org.

The use of compressed air-foam systems and fast-depressurization systems were recognized, and recommendations for the use of these systems included.

The 2015 edition has undergone a significant revision with the merger of NFPA 851. The recommendations contained in NFPA 850 and 851 were aligned, and a new chapter (Chapter 14) was created to provide recommendations specific to hydroelectric generating plants. Recommendations for aerosol extinguishing systems have been added. Recommendations for active carbon injection systems have been added to Chapter 7, and Chapter 11 has been expanded to provide recommendations for fire and life safety involving photoelectric solar power plants.

Copyright 2015 National Fire Protection Association (NFPA). Licensed, by agreement, for individual use and download on June 24, 2015 to LEADER AND READER for designated user PATTARAPORN SRITRAKOOL. No other reproduction or transmission in any form permitted without written permission of NFPA. For inquires or to report unauthorized use, contact licensing@nfpa.org.

Technical Committee on Electric Generating Plants

William D. Snell, *Chair*
Luminant Power, TX [U]

Don Drewry, *Secretary*
HSB Professional Loss Control, NJ [I]

Steven M. Behrens, XL Global Asset Protection Services, CT [I]
Daryl C. Bessa, F. E. Moran, Inc. Special Hazard Systems, IL [IM]
Donald C. Birchler, FP&C Consultants, Inc., MO [SE]
Mark S. Boone, Dominion Resources Services Inc., VA [U]
Rep. Edison Electric Institute
Stanley J. Chingo, NISYS Corporation, GA [SE]
Tom V. Clark, AEGIS Insurance Services, Inc., NJ [I]
Lawrence M. Danner, GE Power & Water, SC [M]
Kenneth W. Dungan, Performance Design Technologies, TN [SE]
Laurie B. Florence, UL LLC, IL [RT]
Ismail M. Gosla, Fluor Corporation, CA [SE]
Daniel D. Groff, AIG Energy and Engineered Risk, PA [I]
Karen I. Hall, Fuel Cell & Hydrogen Energy Association, DC [M]
Fred L. Hildebrandt, Janus Fire Systems, IN [IM]
Rep. Fire Suppression Systems Association
David E. Kipley, AREVA NP, Inc., IL [SE]
John W. Koester, Marsh Risk Consulting, MD [I]
Steve Maurer, Fuel Cell Energy Inc., CT [M]
Amjad M. Mian, Manitoba Hydro, Canada [U]
Scot Pruett, Black & Veatch Corporation, KS [SE]
John E. Reiter, AES Corporation, VA [U]
Ronald Rispoli, Entergy Corporation, AR [U]
Richard Ryan, Rodeo/Hercules Fire Protection District, CA [E]
Daniel J. Sheridan, Wolverine Engineering & Consulting Services, MI [SE]
Michael F. Short, ClearEdge Power, CT [M]
Todd E. Stinchfield, FM Global, RI [I]
Donald Struck, Siemens Fire Safety, NJ [M]
Rep. National Electrical Manufacturers Association
Robert D. Taylor, PRB Coal Users Group, IN [U]
Robert Vincent, Shambaugh & Son, L.P., IN [IM]
Rep. National Fire Sprinkler Association
Robert P. Wichert, Robert P. Wichert Professional Engineering Inc., CA [SE]
William A. Wood, Starr Technical Risks Agency, Inc., GA [I]

Alternates

Richard O. Babb, Luminant Power, TX [U]
(Alt. to W. D. Snell)
James Bouche, F. E. Moran, Inc., IL [IM]
(Alt. to D. C. Bessa)
Hugh D. Castles, Entergy Services, Inc., MS [U]
(Alt. to R. Rispoli)
Matthew J. Daelhousen, FM Global, MA [I]
(Alt. to T. E. Stinchfield)
Russell A. Deubler, HSB Professional Loss Control, NH [I]
(Alt. to D. Drewry)
Larry Dix, XL Global Asset Protection Services, NY [I]
(Alt. to S. M. Behrens)
Kelvin Hecht, ClearEdge Power/UTC Power, CT [M]
(Voting Alt. to UTC Rep.)
Rickey L. Johnson, Marsh Risk Consulting, NY [I]
(Alt. to J. W. Koester)
Brian Johnstone, Fire Protection Industries, Inc., NJ [IM]
(Alt. to R. Vincent)
Lauren F. Kukis, General Electric, SC [M]
(Alt. to L. M. Danner)
Alan P. McCartney, Tennessee Valley Authority, TN [U]
(Voting Alt. to TVA Rep.)
Arthur M. Partin, AIG Energy & Engineered Risk, FL [I]
(Alt. to D. D. Groff)
Timothy Pope, Janus Fire Systems, IN [IM]
(Alt. to F. L. Hildebrandt)
James H. Sharp, Siemens Energy, FL [M]
(Alt. to D. Struck)
Blake M. Shugarman, UL LLC, IL [RT]
(Alt. to L. B. Florence)

Nonvoting

Thomas C. Clayton, Overland Park, KS [SE]
(Member Emeritus)
Leonard R. Hathaway, The Villages, FL [I]
(Member Emeritus)

Chad Duffy, NFPA Staff Liaison

This list represents the membership at the time the Committee was balloted on the final text of this edition. Since that time, changes in the membership may have occurred. A key to classifications is found at the back of the document.

NOTE: Membership on a committee shall not in and of itself constitute an endorsement of the Association or any document developed by the committee on which the member serves.

Committee Scope: This Committee shall have primary responsibility for documents on fire protection for electric generating plants and high voltage direct current (HVDC) converter stations, except for electric generating plants using nuclear fuel.

Copyright 2015 National Fire Protection Association (NFPA). Licensed, by agreement, for individual use and download on June 24, 2015 to LEADER AND READER for designated user PATTARAPORN SRITRAKOOL. No other reproduction or transmission in any form permitted without written permission of NFPA. For inquires or to report unauthorized use, contact licensing@nfpa.org.

Contents

Chapter 1 Administration **850–** 6
1.1 Scope **850–** 6
1.2 Purpose **850–** 6
1.3 Application **850–** 6
1.4 Equivalency **850–** 6
1.5 Units **850–** 6

Chapter 2 Referenced Publications **850–** 6
2.1 General **850–** 6
2.2 NFPA Publications **850–** 7
2.3 Other Publications **850–** 8
2.4 References for Extracts in Recommendations Sections **850–** 8

Chapter 3 Definitions **850–** 9
3.1 General **850–** 9
3.2 NFPA Official Definitions **850–** 9
3.3 General Definitions **850–** 9

Chapter 4 Fire Protection Design Process **850–**10
4.1 General **850–**10
4.2 Stakeholders **850–**10
4.3 Inputs to the Design Process **850–**11
4.4 Fire Protection Design Basis Process **850–**11
4.5 Fire Protection Design Basis Document (Deliverables) **850–**11

Chapter 5 General Plant Design **850–**12
5.1 Plant Arrangement **850–**12
5.2 Life Safety **850–**14
5.3 Building Construction Materials **850–**14
5.4 Smoke and Heat Venting, Heating, Ventilating, and Air Conditioning **850–**15
5.5 Containment and Drainage **850–**15
5.6 Emergency Lighting **850–**16
5.7 Lightning Protection **850–**16

Chapter 6 General Fire Protection Systems and Equipment **850–**16
6.1 General **850–**16
6.2 Water Supply **850–**16
6.3 Valve Supervision **850–**17
6.4 Supply Mains, Yard Mains, Hydrants, and Building Standpipes **850–**17
6.5 Portable Fire Extinguishers **850–**17
6.6 Fire Suppression Systems and Equipment— General Requirements **850–**18
6.7 Fire-Signaling Systems **850–**18

Chapter 7 Identification of and Protection Against Hazards **850–**18
7.1 General **850–**18
7.2 Fuel Handling — Gas **850–**18
7.3 Fuel Handling — Oil **850–**19
7.4 Fuel Handling — Coal **850–**19
7.5 Steam Generator **850–**22
7.6 Flue Gas **850–**22
7.7 Turbine-Generator **850–**25
7.8 Electrical Equipment **850–**27
7.9 Auxiliary Equipment and Other Structures **850–**28

Chapter 8 Identification and Protection of Hazards for Combustion Turbines and Internal Combustion Engines **850–**28
8.1 General **850–**28
8.2 Application of Chapters 4 through 7, 15, and 16 ..... **850–**28
8.3 General Design and Equipment Arrangement **850–**28
8.4 Unattended Facilities **850–**29
8.5 Combustion Turbine and Internal Combustion Engine Generators **850–**29
8.6 Electrical Equipment **850–**31
8.7 Combined Cycle Units **850–**31

Chapter 9 Alternative Fuels **850–**31
9.1 General **850–**31
9.2 Application of Chapters 4 through 7, 16, and 17 ..... **850–**32
9.3 Mass Burn Fuels **850–**32
9.4 Refuse Derived Fuels (RDF) **850–**33
9.5 Biomass Fuels **850–**34
9.6 Rubber Tires **850–**35
9.7 Other Alternative Fuels and Processes **850–**35

Chapter 10 Identification and Protection of Hazards for Wind Turbine Generating Facilities **850–**35
10.1 General **850–**35
10.2 Application of Chapters 4 through 7 and 16 and 17 ..... **850–**36
10.3 General Design and Equipment Arrangement **850–**36
10.4 Unattended Facilities **850–**36
10.5 Wind Generating Facilities **850–**36
10.6 Electrical Equipment Enclosures and Buildings **850–**38

Chapter 11 Solar Thermal Power Generation **850–**38
11.1 General **850–**38
11.2 Application of Chapters 4 through 7, 16, and 17 ..... **850–**38
11.3 Risk Considerations **850–**39
11.4 Heat Transfer Fluid (HTF) **850–**39
11.5 Fire Protection **850–**39

Copyright 2015 National Fire Protection Association (NFPA). Licensed, by agreement, for individual use and download on June 24, 2015 to LEADER AND READER for designated user PATTARAPORN SRITRAKOOL. No other reproduction or transmission in any form permitted without written permission of NFPA. For inquires or to report unauthorized use, contact licensing@nfpa.org.

Chapter 12 Geothermal Power Plants **850**–40
12.1 General **850**–40
12.2 Application of Chapters 4 through 7, 16, and 17 ..... **850**–40
12.3 Binary Plants **850**–40
12.4 Fire Protection **850**–41

Chapter 13 Identification and Protection of Hazards for Integrated Gasification Combined-Cycle Generating Facilities **850**–42
13.1 General **850**–42
13.2 Application of Chapters 4 through 7, 16, and 17 ..... **850**–42
13.3 General Design and Equipment Arrangement **850**–42
13.4 Emergency Response **850**–42
13.5 IGCC Generating Facilities **850**–43
13.6 Structures **850**–44
13.7 Control/Electrical Equipment Enclosures and Buildings **850**–44
13.8 Syngas Within Buildings and Enclosures .. **850**–44
13.9 Prevention of Internal Explosions in Combustion Turbines **850**–44

Chapter 14 Identification and Protection of Hazards for Hydroelectric Generating Plants **850**–44
14.1 General **850**–44
14.2 Application of Chapters 4 through 7 and 16 and 17 ..... **850**–45
14.3 General Design and Equipment Arrangement **850**–45
14.4 Unattended Facilities **850**–45
14.5 Identification and Protection of Hazards **850**–45
14.6 Cable Tunnels **850**–46

Chapter 15 High Voltage Direct Current (HVDC) Converter Stations **850**–46
15.1 General **850**–46
15.2 Application of Chapters 4 through 7, 16, and 17 ..... **850**–46
15.3 HVDC Converter Stations **850**–47

Chapter 16 Fire Protection for the Construction Site **850**–48
16.1 Introduction **850**–48
16.2 Administration **850**–48
16.3 Site Clearing, Excavation, Tunneling, and Construction Equipment **850**–48
16.4 Construction Warehouses, Shops, and Offices **850**–49
16.5 Construction Site Lay-Down Areas **850**–50
16.6 Temporary Construction Materials **850**–50
16.7 Underground Mains, Hydrants, and Water Supplies **850**–50
16.8 Manual Fire-Fighting Equipment **850**–50

Chapter 17 Fire Risk Control Program **850**–51
17.1 General **850**–51
17.2 Management Policy and Direction **850**–51
17.3 Fire Risk Control Program **850**–51
17.4 Fire Protection Program **850**–51
17.5 Identification of Fire Hazards of Materials **850**–53

Annex A Explanatory Material **850**–53

Annex B Sample Fire Report **850**–68

Annex C Fire Tests **850**–68

Annex D Loss Experience **850**–73

Annex E Fire Protection Design Basis Document **850**–76

Annex F Informational References **850**–77

Index **850**–79

Copyright 2015 National Fire Protection Association (NFPA). Licensed, by agreement, for individual use and download on June 24, 2015 to LEADER AND READER for designated user PATTARAPORN SRITRAKOOL. No other reproduction or transmission in any form permitted without written permission of NFPA. For inquires or to report unauthorized use, contact licensing@nfpa.org.

NFPA 850

Recommended Practice for

Fire Protection for Electric Generating Plants and High Voltage Direct Current Converter Stations

2015 Edition

IMPORTANT NOTE: This NFPA document is made available for use subject to important notices and legal disclaimers. These notices and disclaimers appear in all publications containing this document and may be found under the heading "Important Notices and Disclaimers Concerning NFPA Standards." They can also be obtained on request from NFPA or viewed at www.nfpa.org/disclaimers.

NOTICE: An asterisk (*) following the number or letter designating a paragraph indicates that explanatory material on the paragraph can be found in Annex A.

A reference in brackets [ ] following a section or paragraph indicates material that has been extracted from another NFPA document. As an aid to the user, the complete title and edition of the source documents for extracts in the recommendations sections of this document are given in Chapter 2 and those for extracts in the informational sections are given in Annex F. Extracted text may be edited for consistency and style and may include the revision of internal paragraph references and other references as appropriate. Requests for interpretations or revisions of extracted text should be sent to the technical committee responsible for the source document.

Information on referenced publications can be found in Chapter 2 and Annex F.

Chapter 1 Administration

1.1 Scope. This document provides recommendations for fire prevention and fire protection for electric generating plants and high voltage direct current converter stations, except as follows: Nuclear power plants are addressed in NFPA 805; and fuel cells are addressed in NFPA 853.

1.2 Purpose.

1.2.1 This document is prepared for the guidance of those charged with the design, construction, operation, and protection of electric generating plants and high voltage direct current converter stations that are covered by the scope of this document.

1.2.2 This document provides fire hazard control recommendations for the safety of construction and operating personnel, the physical integrity of plant components, and the continuity of plant operations. Specific concerns are generalized and categorized as shown in 1.2.2.1 through 1.2.2.4.

1.2.2.1 Protection of Plant Personnel. Risk of injury and loss of life, in the event of fire, should be controlled. Specific criteria should be established for means of egress. When for plant safety and emergency response reasons personnel are not able to evacuate immediately, specific criteria for ensuring their safety until they can evacuate and safe passage to egress routes should be established.

1.2.2.2 Assets Protection. The large capital costs of the structures, systems, and components for the facilities addressed in this recommended practice create financial risks for the owners, investors, and financiers. Specific criteria should be established for the mitigation of the risks from fires exposing these assets.

1.2.2.3 Business Interruption. The ability of these facilities to generate and transmit electricity is important not only to the owners of the facilities but also to the consumers of that energy, including the public. Specific criteria for managing the effects of fire on the ability to generate and transmit power should be developed, based on economic and societal considerations.

1.2.2.4 Environmental Protection. Fires in these facilities have the potential of creating environmental impact, by damaging pollution control systems and components and by creating unwanted releases to the environment from the fire and fire-fighting activities. Specific criteria should be established to control the impact of fire and fire-fighting activities on the environment.

1.3 Application.

1.3.1 This document is intended for use by persons knowledgeable in the application of fire protection for electric generating plants and high voltage direct current converter stations.

1.3.2 The recommendations contained in this document are intended for new installations, as the application to existing installations might not be practicable. However, the recommendations contained in this document represent good industry practice and should be considered for existing installations.

1.3.3 It should be recognized that rigid uniformity of generating station design and operating procedures does not exist and that each facility will have its own special conditions that impact on the nature of the installation. Many of the specific recommendations herein might require modification after due consideration of all applicable factors involved. This modification should be made only after following the methodology described in Chapter 4 and documented in the Fire Protection Design Basis document.

1.4 Equivalency. Nothing in this recommended practice is intended to prevent the use of systems, methods, or devices of equivalent or superior quality, strength, fire resistance, effectiveness, durability, and safety over those prescribed by this recommended practice.

1.4.1 Equivalency should be demonstrated following the methodology described in Chapter 4 and documented in the Fire Protection Design Basis document.

1.5 Units. Metric units in this document are in accordance with the International System of Units, which is officially abbreviated SI in all languages. For a full explanation, see ASTM SI 10, *Standard for Use of the International System of Units (SI): The Modern Metric System.*

Chapter 2 Referenced Publications

2.1 General. The documents or portions thereof listed in this chapter are referenced within this recommended practice and should be considered part of the recommendations of this document.

Copyright 2015 National Fire Protection Association (NFPA). Licensed, by agreement, for individual use and download on June 24, 2015 to LEADER AND READER for designated user PATTARAPORN SRITRAKOOL. No other reproduction or transmission in any form permitted without written permission of NFPA. For inquires or to report unauthorized use, contact licensing@nfpa.org.

2.2 NFPA Publications. National Fire Protection Association, 1 Batterymarch Park, Quincy, MA 02169-7471.

NFPA 1, *Fire Code,* 2015 edition.

NFPA 10, *Standard for Portable Fire Extinguishers,* 2013 edition.

NFPA 11, *Standard for Low-, Medium-, and High-Expansion Foam,* 2010 edition.

NFPA 12, *Standard on Carbon Dioxide Extinguishing Systems,* 2015 edition.

NFPA 12A, *Standard on Halon 1301 Fire Extinguishing Systems,* 2015 edition.

NFPA 13, *Standard for the Installation of Sprinkler Systems,* 2013 edition.

NFPA 14, *Standard for the Installation of Standpipe and Hose Systems,* 2013 edition.

NFPA 15, *Standard for Water Spray Fixed Systems for Fire Protection,* 2012 edition.

NFPA 16, *Standard for the Installation of Foam-Water Sprinkler and Foam-Water Spray Systems,* 2015 edition.

NFPA 17, *Standard for Dry Chemical Extinguishing Systems,* 2013 edition.

NFPA 20, *Standard for the Installation of Stationary Pumps for Fire Protection,* 2013 edition.

NFPA 22, *Standard for Water Tanks for Private Fire Protection,* 2013 edition.

NFPA 24, *Standard for the Installation of Private Fire Service Mains and Their Appurtenances,* 2013 edition.

NFPA 25, *Standard for the Inspection, Testing, and Maintenance of Water-Based Fire Protection Systems,* 2014 edition.

NFPA 30, *Flammable and Combustible Liquids Code,* 2015 edition.

NFPA 30A, *Code for Motor Fuel Dispensing Facilities and Repair Garages,* 2015 edition.

NFPA 31, *Standard for the Installation of Oil-Burning Equipment,* 2011 edition.

NFPA 37, *Standard for the Installation and Use of Stationary Combustion Engines and Gas Turbines,* 2015 edition.

NFPA 51B, *Standard for Fire Prevention During Welding, Cutting, and Other Hot Work,* 2014 edition.

NFPA 54, *National Fuel Gas Code,* 2015 edition.

NFPA 55, *Compressed Gases and Cryogenic Fluids Code,* 2013 edition.

NFPA 56, *Standard for Fire and Explosion Prevention During Cleaning and Purging of Flammable Gas Piping Systems,* 2014 edition.

NFPA 58, *Liquefied Petroleum Gas Code,* 2014 edition.

NFPA 59, *Utility LP-Gas Plant Code,* 2015 edition.

NFPA 59A, *Standard for the Production, Storage, and Handling of Liquefied Natural Gas (LNG),* 2013 edition.

NFPA 61, *Standard for the Prevention of Fires and Dust Explosions in Agricultural and Food Processing Facilities,* 2013 edition.

NFPA 68, *Standard on Explosion Protection by Deflagration Venting,* 2013 edition.

NFPA 69, *Standard on Explosion Prevention Systems,* 2014 edition.

NFPA 70®, National Electrical Code®, 2014 edition.

NFPA 72®, National Fire Alarm and Signaling Code, 2013 edition.

NFPA 75, *Standard for the Fire Protection of Information Technology Equipment,* 2013 edition.

NFPA 77, *Recommended Practice on Static Electricity,* 2014 edition.

NFPA 80, *Standard for Fire Doors and Other Opening Protectives,* 2013 edition.

NFPA 80A, *Recommended Practice for Protection of Buildings from Exterior Fire Exposures,* 2012 edition.

NFPA 85, *Boiler and Combustion Systems Hazards Code,* 2015 edition.

NFPA 86, *Standard for Ovens and Furnaces,* 2015 edition.

NFPA 90A, *Standard for the Installation of Air-Conditioning and Ventilating Systems,* 2015 edition.

NFPA 90B, *Standard for the Installation of Warm Air Heating and Air-Conditioning Systems,* 2015 edition.

NFPA 92, *Standard for Smoke Control Systems,* 2015 edition.

NFPA 96, *Standard for Ventilation Control and Fire Protection of Commercial Cooking Operations,* 2014 edition.

NFPA *101®, Life Safety Code®,* 2015 edition.

NFPA 110, *Standard for Emergency and Standby Power Systems,* 2013 edition.

NFPA 120, *Standard for Fire Prevention and Control in Coal Mines,* 2015 edition.

NFPA 204, *Standard for Smoke and Heat Venting,* 2015 edition.

NFPA 214, *Standard on Water-Cooling Towers,* 2011 edition.

NFPA 220, *Standard on Types of Building Construction,* 2015 edition.

NFPA 241, *Standard for Safeguarding Construction, Alteration, and Demolition Operations,* 2013 edition.

NFPA 252, *Standard Methods of Fire Tests of Door Assemblies,* 2012 edition.

NFPA 253, *Standard Method of Test for Critical Radiant Flux of Floor Covering Systems Using a Radiant Heat Energy Source,* 2015 edition.

NFPA 257, *Standard on Fire Test for Window and Glass Block Assemblies,* 2012 edition.

NFPA 259, *Standard Test Method for Potential Heat of Building Materials,* 2013 edition.

NFPA 497, *Recommended Practice for the Classification of Flammable Liquids, Gases, or Vapors and of Hazardous (Classified) Locations for Electrical Installations in Chemical Process Areas,* 2012 edition.

NFPA 501A, *Standard for Fire Safety Criteria for Manufactured Home Installations, Sites, and Communities,* 2013 edition.

NFPA 600, *Standard on Facility Fire Brigades,* 2015 edition.

NFPA 601, *Standard for Security Services in Fire Loss Prevention,* 2015 edition.

NFPA 654, *Standard for the Prevention of Fire and Dust Explosions from the Manufacturing, Processing, and Handling of Combustible Particulate Solids,* 2013 edition.

NFPA 664, *Standard for the Prevention of Fires and Explosions in Wood Processing and Woodworking Facilities,* 2012 edition.

NFPA 701, *Standard Methods of Fire Tests for Flame Propagation of Textiles and Films,* 2015 edition.

NFPA 704, *Standard System for the Identification of the Hazards of Materials for Emergency Response,* 2012 edition.

NFPA 750, *Standard on Water Mist Fire Protection Systems,* 2015 edition.

NFPA 780, *Standard for the Installation of Lightning Protection Systems,* 2014 edition.

NFPA 805, *Performance-Based Standard for Fire Protection for Light Water Reactor Electric Generating Plants,* 2015 edition.

NFPA 853, *Standard for the Installation of Stationary Fuel Cell Power Systems,* 2015 edition.

NFPA 1142, *Standard on Water Supplies for Suburban and Rural Fire Fighting,* 2012 edition.

NFPA 1143, *Standard for Wildland Fire Management,* 2014 edition.

NFPA 1144, *Standard for Reducing Structure Ignition Hazards from Wildland Fire,* 2013 edition.

NFPA 1221, *Standard for the Installation, Maintenance, and Use of Emergency Services Communications Systems,* 2013 edition.

NFPA 1901, *Standard for Automotive Fire Apparatus,* 2009 edition.

Copyright 2015 National Fire Protection Association (NFPA). Licensed, by agreement, for individual use and download on June 24, 2015 to LEADER AND READER for designated user PATTARAPORN SRITRAKOOL. No other reproduction or transmission in any form permitted without written permission of NFPA. For inquires or to report unauthorized use, contact licensing@nfpa.org.

NFPA 1962, *Standard for the Care, Use, Inspection, Service Testing, and Replacement of Fire Hose, Couplings, Nozzles, and Fire Hose Appliances,* 2013 edition.

NFPA 1971, *Standard on Protective Ensembles for Structural Fire Fighting and Proximity Fire Fighting,* 2013 edition.

NFPA 2001, *Standard on Clean Agent Fire Extinguishing Systems,* 2015 edition.

NFPA 2010, *Standard for Fixed Aerosol Fire-Extinguishing Systems,* 2015 edition.

NFPA 5000®, Building Construction and Safety Code®, 2015 edition.

NFPA *Fire Protection Handbook,* 2008, 20th edition.

SFPE *Engineering Guide to Fire Risk Assessment,* 2006 edition.

SFPE *Handbook of Fire Protection Engineering,* 2008, 4th edition.

2.3 Other Publications.

2.3.1 ANSI Publications. American National Standards Institute, Inc., 25 West 43rd Street, 4th Floor, New York, NY 10036.

ANSI C2, *National Electrical Safety Code*, 1981.

2.3.2 API Publications. American Petroleum Institute, 1220 L Street, NW, Washington, DC 20005-4070.

API 500, *Recommended Practice for Classification of Locations for Electrical Installations at Petroleum Facilities Classified as Class I, Division I and Division II*, 2012.

API 505, *Recommended Practice for Classification of Locations for Electrical Installations at Petroleum Facilities Classified as Class I, Zone 0 and Zone 2*, 2002.

API 537, *Flare Details for General Refinery and Petrochemical Service*, 2008.

API 2218, *Fireproofing Practices in Petroleum and Petrochemical Processing Plants*, 2010.

API RP 521, *Guide for Pressure Relieving and Depressurizing Systems*, 2007.

API RP 941, *Steels for Hydrogen Service at Elevated Temperatures and Pressures in Petroleum Refineries and Petrochemical Plants*, 2008.

2.3.3 ASME Publications. American Society of Mechanical Engineers, Two Park Avenue, New York, NY 10016-5990.

ASME B31.1, *Power Piping*, 2012.

ASME B31.3, *Process Piping*, 2012.

ASME B31.8, *Gas Transmission and Distribution Piping Systems*, 2010.

2.3.4 ASTM Publications. ASTM International, 100 Barr Harbor Drive, P.O. Box C700, West Conshohocken, PA 19428-2959.

ASTM D92, *Standard Test Method for Flash and Fire Points by Cleveland Open Cup Tester*, 2012b.

ASTM D448, *Standard Classification for Sizes of Aggregate for Road and Bridge Construction*, 2012.

ASTM E84, *Standard Test Method for Surface Burning Characteristics of Building Materials*, 2012c.

ASTM E108, *Standard Test Methods for Fire Tests of Roof Coverings*, 2011.

ASTM E119, *Standard Test Methods for Fire Tests of Building Construction and Materials*, 2012.

ASTM E136, *Standard Test Method for Behavior of Materials in a Vertical Tube Furnace at 750°C*, 2012.

ASTM E814, *Standard Test Method for Fire Tests of Penetration Firestop Systems*, 2011.

ASTM E1248, *Standard Practice for Shredder Explosion Protection*, 2009.

ASTM SI 10, *American National Standard for Metric Practice*, 2010.

2.3.5 IEC Publications. International Electrotechnical Commission, 3, rue de Varembé, P.O. Box 131, CH-1211 Geneva 20, Switzerland.

IEC 62305, *Protection Against Lightning*, 2003.

2.3.6 IEEE Publications. IEEE, Three Park Avenue, 17th Floor, New York, NY 10016-5997.

IEEE C37.20.7, *Guide for Testing Metal-Enclosed Switchgear Rated Up to 38 kV for Internal Arcing Faults*, 2007.

IEEE 484, *Recommended Practice for Installation Design and Installation of VentedLead-Acid Batteries for Stationary Applications*, 2002.

IEEE 634, *Standard for Cable-Penetration Fire Stop Qualification Test* , 2004.

IEEE 1202, *Standard for Flame-Propagation Testing of Wire and Cable*, 2006.

2.3.7 UL Publications. Underwriters Laboratories Inc., 333 Pfingsten Road, Northbrook, IL 60062-2096.

ANSI/UL 263, *Standard for Fire Tests of Building Construction and Materials*, 2011.

ANSI/UL 723, *Test for Surface Burning Characteristics of Building Materials*, 2008, revised 2010.

ANSI/UL 790, *Tests for Fire Resistance of Roof Covering Materials*, 2004, revised 2008.

ANSI/UL 900, *Standard for Safety Test Performance of Air Filters*, 2004, revised 2011.

ANSI/UL 1479, *Standard for Fire Tests of Through-Penetration Firestops*, 2003, revised 2010.

ANSI/UL 1709, *Standard for Rapid Rise Fire Tests of Protection Materials for Structural Steel*, 2011.

2.3.8 U.S. Government Publications. U.S. Government Printing Office, Washington, DC 20402.

OSHA 29 CFR 1910.146, "Permit Required Confined Space Standard," U.S. Department of Labor, 2010.

Title 29, CFR, Part 1910.156, "Fire Brigades," 2008.

2.3.9 Other Publications. *Merriam-Webster's Collegiate Dictionary*, 11th edition, Merriam-Webster, Inc., Springfield, MA, 2003.

2.4 References for Extracts in Recommendations Sections.

NFPA 30, *Flammable and Combustible Liquids Code,* 2015 edition.

NFPA 101®, Life Safety Code®, 2015 edition.

NFPA 220, *Standard on Types of Building Construction,* 2015 edition.

NFPA 801, *Standard for Fire Protection for Facilities Handling Radioactive Materials,* 2014 edition.

NFPA 5000®, Building Construction and Safety Code®, 2015 edition.

Copyright 2015 National Fire Protection Association (NFPA). Licensed, by agreement, for individual use and download on June 24, 2015 to LEADER AND READER for designated user PATTARAPORN SRITRAKOOL. No other reproduction or transmission in any form permitted without written permission of NFPA. For inquires or to report unauthorized use, contact licensing@nfpa.org.

Chapter 3 Definitions

3.1 General. The definitions contained in this chapter apply to the terms used in this recommended practice. Where terms are not defined in this chapter or within another chapter, they should be defined using their ordinarily accepted meanings within the context in which they are used. *Merriam-Webster's Collegiate Dictionary*, 11th edition, is the source for the ordinarily accepted meaning.

3.2 NFPA Official Definitions.

3.2.1* Approved. Acceptable to the authority having jurisdiction.

3.2.2* Authority Having Jurisdiction (AHJ). An organization, office, or individual responsible for enforcing the requirements of a code or standard, or for approving equipment, materials, an installation, or a procedure.

3.2.3 Labeled. Equipment or materials to which has been attached a label, symbol, or other identifying mark of an organization that is acceptable to the authority having jurisdiction and concerned with product evaluation, that maintains periodic inspection of production of labeled equipment or materials, and by whose labeling the manufacturer indicates compliance with appropriate standards or performance in a specified manner.

3.2.4* Listed. Equipment, materials, or services included in a list published by an organization that is acceptable to the authority having jurisdiction and concerned with evaluation of products or services, that maintains periodic inspection of production of listed equipment or materials or periodic evaluation of services, and whose listing states that either the equipment, material, or service meets appropriate designated standards or has been tested and found suitable for a specified purpose.

3.2.5 Recommended Practice. A document that is similar in content and structure to a code or standard but that contains only nonmandatory provisions using the word "should" to indicate recommendations in the body of the text.

3.2.6 Should. Indicates a recommendation or that which is advised but not required.

3.3 General Definitions.

3.3.1 Alternative Fuels. Solid fuels such as municipal solid waste (MSW), refuse derived fuel (RDF), biomass, rubber tires, and other combustibles that are used instead of fossil fuels (gas, oil, or coal) in a boiler to produce steam for the generation of electrical energy.

3.3.2 Biomass. A boiler fuel manufactured by means of a process that includes storing, shredding, classifying, and conveying of forest and agricultural byproducts (e.g., wood chips, rice hulls, sugar cane).

3.3.3 Combustible. Capable of undergoing combustion.

3.3.4 Combustible Material. A material that, in the form in which it is used and under the conditions anticipated, will ignite and burn; a material that does not meet the definition of noncombustible or limited-combustible.

3.3.5 Compressed Air Foam (CAF). A homogenous foam produced by the combination of water, foam concentrate, and air or nitrogen under pressure.

3.3.6 Fast Depressurization System. A passive mechanical system designed to depressurize the transformer a few milliseconds after the occurrence of an electrical fault.

3.3.7 Fire Area. An area that is physically separated from other areas by space, barriers, walls, or other means in order to contain fire within that area.

3.3.8 Fire Barrier. A continuous membrane or a membrane with discontinuities created by protected openings with a specified fire protection rating, where such membrane is designed and constructed with a specified fire resistance rating to limit the spread of fire, that also restricts the movement of smoke. [***101***, 2015]

3.3.9 Fire Loading. The amount of combustibles present in a given area, expressed in Btu/ft^2 (kJ/m^2).

3.3.10 Fire Point. The lowest temperature at which a liquid will ignite and achieve sustained burning when exposed to a test flame in accordance with ASTM D92, *Standard Test Method for Flash and Fire Points by Cleveland Open Cup Tester*. [**30,** 2015]

3.3.11 Fire Prevention. Measures directed toward avoiding the inception of fire. [**801,** 2014]

3.3.12 Fire Protection. Methods of providing for fire control or fire extinguishment. [**801,** 2014]

3.3.13 Fire Rated Penetration Seal. An opening in a fire barrier for the passage of pipe, cable, duct, and so forth, that has been sealed to maintain a barrier rating.

3.3.14 Fire Risk Evaluation. An evaluation of the plant-specific considerations regarding design, layout, and anticipated operating requirements. The evaluation should result in a list of recommended fire prevention features to be provided based on acceptable means for separation or control of common and special hazards, the control or elimination of ignition sources, and the suppression of fires.

3.3.15 Fluid.

3.3.15.1 ***Fire-Resistant Fluid.*** A listed hydraulic fluid or lubricant that is difficult to ignite due to its high fire point and autoignition temperature and that does not sustain combustion due to its low heat of combustion.

3.3.15.2 ***Nonflammable Fluid.*** A nonflammable dielectric fluid that does not have a flash point and is not flammable in air.

3.3.16 Fossil Fueled. Fuel containing chemical energy, which has been formed from animal and plant matter over many years (i.e., oil, coal, and natural gas) that are used in a boiler to produce steam for the generation of electrical energy.

3.3.17 High Voltage Direct Current (HVDC) Converter Station. A facility that functions as an electrical rectifier (ac-dc) or an inverter (dc-ac) to control and transmit power in a high voltage network. There are two types of HVDC valves — the mercury arc valve and the present-day technology solid state thyristor valve. Both types of valves present a fire risk due to high voltage equipment that consists of oil-filled converter transformers, wall bushings, and capacitors in addition to various polymeric components.

3.3.18 Interior Finish. The exposed surfaces of walls, ceilings, and floors within buildings. [**5000**, 2015]

3.3.18.1 ***Class A Interior Finish.*** Materials having a flame spread index of 0–25, and a smoke developed index of

Copyright 2015 National Fire Protection Association (NFPA). Licensed, by agreement, for individual use and download on June 24, 2015 to LEADER AND READER for designated user PATTARAPORN SRITRAKOOL. No other reproduction or transmission in any form permitted without written permission of NFPA. For inquires or to report unauthorized use, contact licensing@nfpa.org.

0–450 when tested in accordance with ASTM E84, *Standard Test Method for Surface Burning Characteristics of Building Materials*, or ANSI/UL 723, *Test for Surface Burning Characteristics of Building Materials*. Includes any material with a flame spread index of 25 or less and with a smoke developed index of 450 or less when any element thereof, when tested, does not continue to propagate fire.

3.3.18.2 ***Class B Interior Finish.*** Materials having a flame spread index of 26–75, and a smoke developed index of 0–450 when tested in accordance with ASTM E84, *Standard Test Method for Surface Burning Characteristics of Building Materials*, or ANSI/UL 723, *Test for Surface Burning Characteristics of Building Materials*. Includes any material with a flame spread index of –26 or more but not more than 75 and with a smoke developed index of 450 or less.

3.3.19 Limited Combustible. A building construction material not complying with the definition of noncombustible material that, in the form in which it is used, has a potential heat value not exceeding 8141 kJ/kg (3500 Btu/lb), where tested in accordance with NFPA 259 and complies with (a) or (b): (a) materials having a structural base of noncombustible material, with a surfacing not exceeding a thickness of 3.2 mm (0.127 in.) that has a flame spread index not greater than 50; and (b) materials, in the form and thickness used, other than as described in (a), having neither a flame spread index greater than 25 nor evidence of continued progressive combustion and of such composition that surfaces that would be exposed by cutting through the material on any plane would have neither a flame spread index greater than 25 nor evidence of continued progressive combustion. (Materials subject to increase in combustibility or flame spread index beyond the limits herein established through the effects of age, moisture, or other atmospheric condition shall be considered combustible.)

3.3.20 Liquid.

3.3.20.1 ***Combustible Liquid.*** Any liquid that has a closed-cup flash point at or above 100°F (37.8°C). *(See NFPA 30.)*

3.3.20.2 ***Flammable Liquid.*** A liquid that has a closed-cup flash point that is below 100°F (37.8°C) and a maximum vapor pressure of 40 psia (2068 mm Hg) at 100°F (37.8°C).

3.3.20.3 ***High Fire Point Liquid.*** A combustible dielectric liquid listed as having a fire point of not less than 572°F (300°C).

3.3.20.4 ***Less Flammable Liquid.*** A combustible dielectric liquid listed as having a fire point of not less than 572°F (300°C).

3.3.21 Mass Burn. A process in which municipal solid waste is hauled directly to a tipping floor or storage pit and then is used as a boiler fuel without any special processing.

3.3.22 Municipal Solid Waste (MSW). Solid waste materials consisting of commonly occurring residential and light commercial waste.

3.3.23 Noncombustible. A material that, in the form in which it is used and under the conditions anticipated, will not aid combustion or add appreciable heat to an ambient fire. Materials when tested in accordance with ASTM E136, *Standard Test Method for Behavior of Materials in a Vertical Tube Furnace at 750°C*, and conforming to the criteria contained in Section 7 of the referenced standard are considered noncombustible.

3.3.24 Rating.

3.3.24.1 ***Fire Protection Rating.*** The time, in minutes or hours, that materials and assemblies used as opening protection have withstood a fire exposure as established in accordance with test procedures of NFPA 252 and NFPA 257 as applicable.

3.3.24.2 ***Fire Resistance Rating.*** The time, in minutes or hours, that materials or assemblies have withstood a fire exposure as determined by the tests, or methods based on tests, as prescribed in *NFPA 5000*. [**5000,** 2015]

3.3.25 Refuse Derived Fuel (RDF). A boiler fuel manufactured by means of a process that includes storing, shredding, classifying, and conveying of municipal solid waste.

3.3.26 Stakeholder. An individual, a group of individuals, or an organization that is perceived to affect or be affected by the fire hazards associated with the facility being evaluated. Stakeholders include all those who have a financial, personnel safety, public safety, or regulatory interest in the fire risk, such as the public (e.g., neighbors, community groups, first responders), employees, owner/investor(s), operator, insurer, regulator(s), and design team.

Chapter 4 Fire Protection Design Process

4.1 General.

4.1.1 The fire protection design process should be initiated under the direction of someone experienced in the area of fire protection engineering and having extensive knowledge and experience in power plant operation of the type of plant under consideration.

4.1.2 The creation of the fire protection design basis should be initiated as early in the plant design process as practical to ensure that the fire prevention and fire protection recommendations as described in this document have been evaluated in view of the plant-specific consideration regarding design, layout, and anticipated operating requirements.

4.1.3 Applicable process safety management (PSM) techniques should be considered.

4.1.4 The purpose of the Fire Protection Design Basis Document (DBD) is to provide a record of the decision-making process in determining the fire prevention and fire protection for specific hazards.

4.1.5 The Fire Protection Design Basis Document should be a living document that continues to evolve, as the plant design is refined, and it should be maintained and revised for the life of the plant. The Fire Protection Design Basis Document is key to the management of change process *(see 17.4.3)*.

4.2 Stakeholders.

4.2.1 The stakeholders with an interest in the scope and applicability of the fire protection design should be identified early in the process.

4.2.2 Stakeholders establish goals and objectives and evaluate whether the recommendations of NFPA 850 are adequate to meet those goals and objectives. The criteria for acceptability of the level of fire protection should consider the perspective of the various stakeholders.

Copyright 2015 National Fire Protection Association (NFPA). Licensed, by agreement, for individual use and download on June 24, 2015 to LEADER AND READER for designated user PATTARAPORN SRITRAKOOL. No other reproduction or transmission in any form permitted without written permission of NFPA. For inquires or to report unauthorized use, contact licensing@nfpa.org.

4.3 Inputs to the Design Process.

4.3.1 General Inputs. In addition to the guidelines in this document, the following list should be reviewed for applicability:

(1) Codes
  (a) Building codes — state and local
  (b) Fire codes — state and local
(2) Standards
  (a) Industry standards
  (b) Utility company standards
  (c) Insurance requirements
  (d) Applicable NFPA documents *(See Chapter 2.)*
(3) Regulations
  (a) Environmental
  (b) OSHA
(4) Other references
  (a) SFPE *Handbook of Fire Protection Engineering* and journals
  (b) *SFPE Engineering Guide to Fire Risk Assessment* (Chapters 14 and 15)
  (c) Best Practices: EEI, EPRI, IEEE
  (d) NFPA *Fire Protection Handbook*
  (e) NFPA 805 (Performance-Based Criteria in Chapter 4)
(5) Design documents
(6) Stakeholder inputs

4.3.2 Project-Specific Inputs. Each facility will have its own special conditions that impact on the nature of the installation. Many of the specific criteria herein might require modification, due to the consideration of all project-specific factors involved. The project-specific inputs utilized in the design basis process include but are not limited to the following:

(1) Base load/peaking unit
(2) Personnel levels
  (a) Unattended
  (b) Low level of occupancy
  (c) High level of occupancy
(3) Fuel types and volatility
(4) Plant layout and geographic location
(5) Equipment availability/redundancy
(6) Availability of water supply
(7) Capability of emergency responders
(8) Storage configuration (short term and long term)
(9) Historical loss information/lessons learned/fire reports *(See Annex B and Annex D.)*

4.4 Fire Protection Design Basis Process.

4.4.1 Stakeholder establishes goals and objectives and evaluates whether the recommendations of NFPA 850 are adequate to meet those goals and objectives. The criteria for acceptability of the level of fire protection should consider the perspective of the various stakeholders.

4.4.2 The general arrangement and plant layout should be provided to clearly reflect the separation of hazards. If layout is not acceptable, a fire risk evaluation should be developed to ensure objectives are met, and then return to the review process.

4.4.3 Each hazard/area is reviewed against the goals and objectives and NFPA 850. If the hazards control is not acceptable, then a fire risk evaluation should be developed to ensure objectives are met, and then return to the review process.

4.4.4 A DBD is developed.

4.4.5 As the project evolves, the DBD should be reviewed and updated as necessary to incorporate changes and revisions. *(See Figure 4.4.5.)*

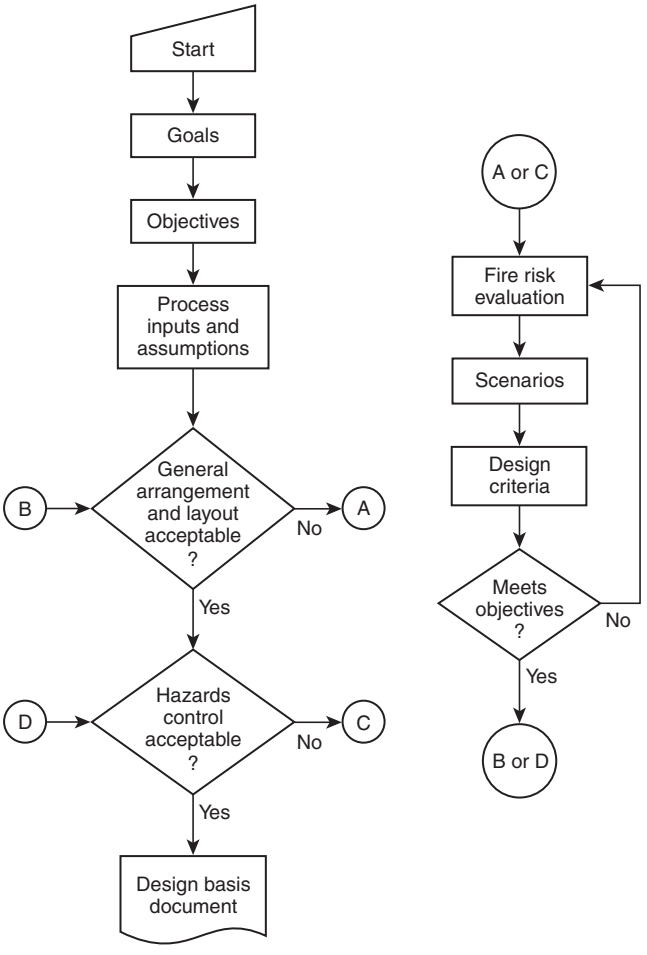

FIGURE 4.4.5 Fire Protection Design Basis Process Flow Chart.

4.5 Fire Protection Design Basis Document (Deliverables).

4.5.1 The scope of the DBD is to establish the fire protection design criteria for the facility. The development of the DBD will be an iterative process. The DBD will be revised as the design progresses, based on dialogue among the stakeholders. The DBD should outline the fire protection/prevention design basis for achieving the fire hazard control objectives agreed upon by the stakeholders, including the following:

(1) Identify assumptions (including items in 4.3.2).
(2) Identify source documents.
(3) Identify each hazard, identify which fire prevention/protection features are to be provided or omitted, and summarize the decision-making process.
(4) Identify where operational and administrative controls are assumed to be in place to mitigate the need for fire protection features.

Copyright 2015 National Fire Protection Association (NFPA). Licensed, by agreement, for individual use and download on June 24, 2015 to LEADER AND READER for designated user PATTARAPORN SRITRAKOOL. No other reproduction or transmission in any form permitted without written permission of NFPA. For inquires or to report unauthorized use, contact licensing@nfpa.org.

4.5.2 During the various stages of the design development and the development of the DBD, assumptions will be made when inadequate or insufficient information is available. These assumptions should be clearly identified and documented in accordance with Section 4.5. As additional information becomes available, the assumptions should be updated or replaced with actual design information and the DBD should be amended as necessary to reflect the more definitive information.

4.5.3 The process identified in 4.5.1 and 4.5.2 should be documented. The format of the document is a statement on general fire protection philosophy for the facility and a comparison of the facility fire protection features to the guidelines in the design chapters; for example, protection of oil hazards and also addressing containment and drainage. A sample table of contents for the DBD is contained in Annex E.

Chapter 5 General Plant Design

5.1 Plant Arrangement.

5.1.1 Fire Area Determination.

5.1.1.1 The electric generating plant and the high voltage direct current converter station should be subdivided into separate fire areas as determined by the Fire Protection Design Basis Document for the purpose of limiting the spread of fire, protecting personnel, and limiting the resultant consequential damage to the plant. Fire areas should be separated from each other by fire barriers, spatial separation, or other approved means.

5.1.1.2 Determination of fire area boundaries should be based on consideration of the following:

(1) Types, quantity, density, and locations of combustible material
(2) Location and configuration of plant equipment
(3) Consequence of losing plant equipment
(4) Location of fire detection and suppression systems

5.1.1.3* Unless consideration of the factors of 5.1.1.2 indicates otherwise or if adequate spatial separation is provided as permitted in 5.1.1.5, it is recommended that fire area boundaries be provided to separate the following:

(1) Cable spreading room(s), and cable tunnel(s) and high voltage lead shafts from adjacent areas
(2) Control room, computer room, or combined control/computer room from adjacent areas
(3) Rooms with major concentrations of electrical equipment, such as a switchgear room or relay room, from adjacent areas
(4) Battery rooms from associated battery chargers, equipment, and adjacent areas
(5) Maintenance shop(s) from adjacent areas
(6) Main fire pump(s) from reserve fire pump(s) where these pumps provide the only source of fire protection water
(7) Fire pumps from adjacent areas
(8) Warehouses from adjacent areas
(9) Emergency generators from each other and from adjacent areas
(10) Fossil fuel–fired auxiliary boiler(s) from adjacent areas
(11) Fuel oil pumping, fuel oil heating facilities, or both, used for continuous firing of the boiler from adjacent areas
(12) Storage areas for flammable and combustible liquid tanks and containers from adjacent areas
(13) Office buildings from adjacent areas
(14) Telecommunication rooms, supervisory control and data acquisition (SCADA) rooms, and remote terminal unit (RTU) rooms from adjacent areas
(15) Adjacent turbine generators beneath the underside of the operating floor
(16) Between the boiler house and the areas of the coal handling system above the bin, bunker, or silo
(17) Fan rooms and plenum chambers from adjacent areas [fire dampers might not be advisable in emergency ventilation ducts *(see Section 5.4)*]
(18) Switchgear area and sulfur hexafluoride (SF_6) switchyard area from adjacent areas

5.1.1.4 Fire barriers separating fire areas should be a minimum of 2-hour fire resistance rating.

5.1.1.5 If a fire area is defined as a detached structure, it should be separated from other structures by an appropriate distance as determined by NFPA 80A evaluation.

5.1.2 Openings in Fire Barriers.

5.1.2.1* All openings in fire barriers should be provided with fire door assemblies, fire dampers, through penetration seals (fire stops), or other approved means having a fire protection rating consistent with the designated fire resistance rating of the barrier. Windows in fire barriers (e.g., control rooms or computer rooms) should be provided with a fire shutter or automatic water curtain. Through penetration fire stops for electrical and piping openings should be listed or should meet the requirements for an "F" rating when tested in accordance with ASTM E814, *Standard Test Method for Fire Tests of Penetration Firestop Systems.* Other test methods for qualifications of penetration seals, such as IEEE 634, *Testing of Fire Rated Penetration Seals,* or ANSI/UL 1479, *Standard for Fire Tests of Through-Penetration Firestops,* are permitted to be considered for this application.

5.1.2.2 Fire door assemblies, fire dampers, and fire shutters used in 2-hour–rated fire barriers should be listed and approved for a minimum 1½ hour fire rating. *(See NFPA 80.)*

5.1.3 Hydrogen Storage. Hydrogen storage facilities should be separated from adjacent areas. *(See NFPA 55.)*

5.1.4 Outdoor Oil-Insulated Transformers.

5.1.4.1 Outdoor oil-insulated transformers should be separated from adjacent structures and from each other by firewalls, spatial separation, or other approved means for the purpose of limiting the damage and potential spread of fire from a transformer failure.

5.1.4.2 Determination of the type of physical separation to be used between transformers, control equipment, and building structures should be based on a detailed analysis of the following:

(1) Type and quantity of oil in the transformer
(2) Size of a postulated oil spill (surface area and depth)
(3) Type of construction of adjacent structures
(4) Type and amount of exposed equipment, including high line structures, motor control center (MCC) equipment, breakers, other transformers, and so forth.
(5) Power rating of the transformer
(6) Fire suppression systems provided
(7) Type of electrical protective relaying provided

Copyright 2015 National Fire Protection Association (NFPA). Licensed, by agreement, for individual use and download on June 24, 2015 to LEADER AND READER for designated user PATTARAPORN SRITRAKOOL. No other reproduction or transmission in any form permitted without written permission of NFPA. For inquires or to report unauthorized use, contact licensing@nfpa.org.

(8) Availability of replacement transformers (long lead times)
(9)*The existence of fast depressurization systems

Once this analysis has been completed, any decisions made as a result should be included as part of the Fire Protection Design Basis Document.

5.1.4.3* Unless consideration of the factors in 5.1.4.2 indicates otherwise, it is recommended that any oil-insulated transformer containing 500 gal (1893 L) or more of oil be separated from adjacent structures by a 2-hour–rated firewall or by spatial separation in accordance with Table 5.1.4.3. Where a firewall is provided between structures and a transformer, it should extend vertically and horizontally as indicated in Figure 5.1.4.3.

Table 5.1.4.3 Outdoor Oil-Insulated Transformer Separation Criteria

Transformer Oil Capacity		Minimum (Line-of-Sight) Separation Without Firewall	
gal	**L**	**ft**	**m**
<500	<1893	See 5.1.4.2	
500–5000	1893–18,925	25	7.6
>5000	>18,925	50	15

5.1.4.4 Unless consideration of the factors in 5.1.4.2 indicates otherwise, it is recommended that adjacent oil-insulated transformers containing 500 gal (1893 L) or more of oil be separated from each other by a 2 hour–rated firewall or by spatial separation in accordance with Table 5.1.4.3. When the oil containment, as shown in Figure 5.1.4.4, consists of a large, flat concrete containment area that holds several transformers and other equipment in it without the typical pit containment areas, specific containment features to keep the oil in one transformer from migrating to any other transformer or equipment should be provided. Subsection 5.5.7 can be used for guidance. Where a firewall is provided between transformers, it should extend at least 1 ft (0.31 m) above the top of the transformer casing and oil conservator tank and at least 2 ft (0.61 m) beyond the width of the transformer and cooling radiators, or to the edge of the containment area, whichever is greater. *(See Figure 5.1.4.4 for an illustration of the recommended dimensions for a firewall.)*

5.1.4.5* Where a firewall is provided, it should be designed to withstand the effects of projectiles from exploding transformer bushings or lightning arresters.

5.1.4.6 For transformers with less than 500 gal (1893 L) of oil and where a firewall is not provided, the edge of the postulated oil spill (i.e., containment basin, if provided) should be separated by a minimum of 5 ft (1.5 m) from the exposed structure to prevent direct flame impingement on the structure.

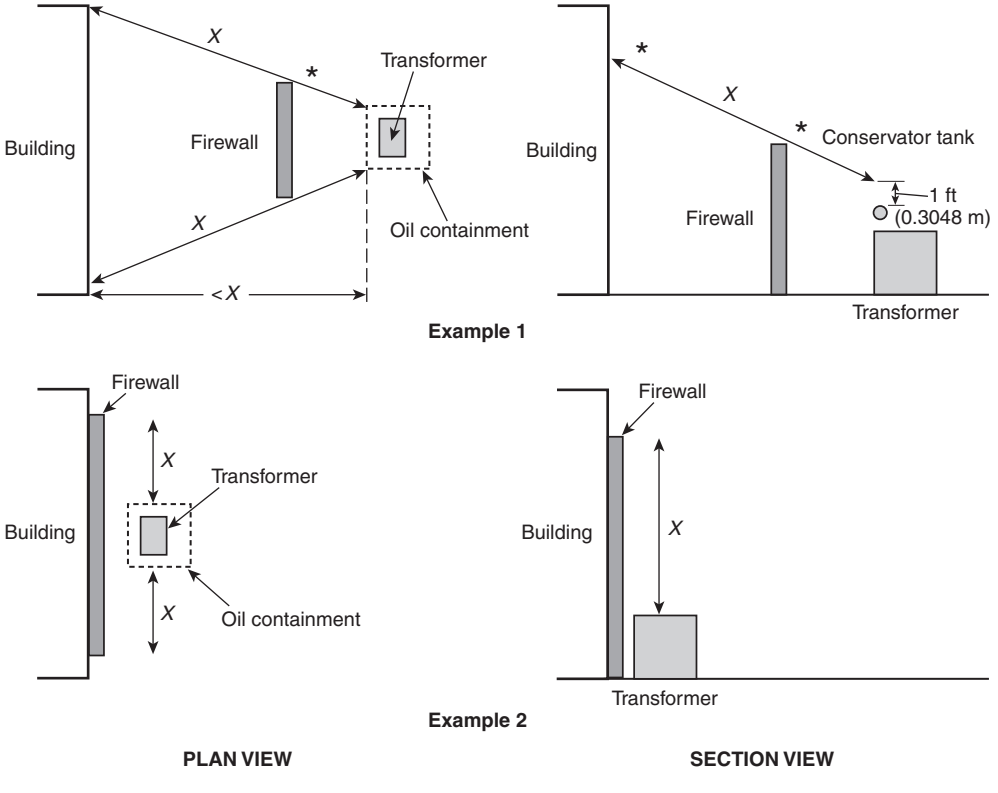

X: Minimum separation distance from Table 5.1.4.3.
*: See A.5.1.4.3.

FIGURE 5.1.4.3 Illustration of Oil-Insulated Transformer Separation Recommendations.

Copyright 2015 National Fire Protection Association (NFPA). Licensed, by agreement, for individual use and download on June 24, 2015 to LEADER AND READER for designated user PATTARAPORN SRITRAKOOL. No other reproduction or transmission in any form permitted without written permission of NFPA. For inquires or to report unauthorized use, contact licensing@nfpa.org.

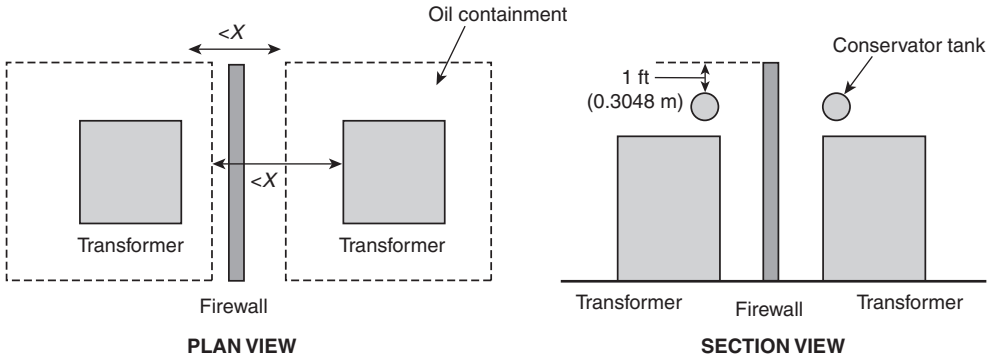

X: Minimum separation distance from Table 5.1.4.3.

FIGURE 5.1.4.4 Outdoor Oil-Insulated Transformer Separation Criteria.

5.1.4.7 Outdoor transformers insulated with a less flammable liquid should be separated from each other and from adjacent structures that are critical to power generation by firewalls or spatial separation based on consideration of the factors in 5.1.4.2 and 5.1.4.5.

5.1.5 Indoor Transformers.

5.1.5.1 Dry-type transformers are preferred for indoor installations.

5.1.5.2* Oil-insulated transformers of greater than 100 gal (379 L) oil capacity installed indoors should be separated from adjacent areas by fire barriers of 3-hour fire resistance rating.

5.1.5.3 Transformers having a rating greater than 35 kV, insulated with a less flammable liquid or nonflammable fluid, and installed indoors should be separated from adjacent areas by fire barriers of 3-hour fire resistance rating.

5.1.5.4 Where transformers are protected by an automatic fire suppression system, the fire barrier fire resistance rating is permitted to be reduced to 1 hour.

5.1.6 General Substation Arrangement.

5.2 Life Safety.

5.2.1 For life safety considerations for electric generating plants included in the scope of this document, see NFPA *101*.

5.2.2* Structures should be classified as follows, as defined in NFPA *101*:

(1) General areas should be considered as special purpose industrial occupancies.
(2) Open structures and underground structures (e.g., tunnels) should be considered as occupancies in special structures. Temporary occupancies and means of egress inside the structures and piers of large "bulb" hydroelectric units should be evaluated based on occupancies in special structures.
(3) General office structures should be considered as business occupancies.
(4) Warehouses should be considered as storage occupancies.
(5) Coal preparation and handling facilities (e.g., enclosed crusher houses, transfer houses, and conveyors) should be considered special-purpose industrial occupancies.
(6) Scrubber buildings should be considered as special-purpose industrial occupancies.

5.2.3 In the event of a plant fire, egress of occupants in control facilities can be delayed due to emergency shutdown procedures. *(See NFPA 101, 40.2.5.1.2, Ancillary Facilities with Delayed Evacuation.)* Control facilities should have a means of egress that is separated from other plant areas to facilitate a delayed egress.

5.2.4 In the event of a plant fire, explosion, or other incident that would require evacuation of a turbine hall or boiler house (or any other occupied area) during an outage, evacuation plans and emergency plans in general should be developed that would take into consideration the increased occupancy load in these areas.

5.3 Building Construction Materials.

5.3.1 Construction materials being considered for electric generating plants and high-voltage direct current converter stations should be selected based on the Fire Protection Design Basis Document and on consideration of the following standards:

(1) NFPA 220, *Standard on Types of Building Construction*
(2) ASTM E119 or ANSI/UL 263, *Standard Test Methods for Fire Tests of Building Construction and Materials*
(3) NFPA 253, *Standard Method of Test for Critical Radiant Flux of Floor Covering Systems Using a Radiant Heat Energy Source*
(4) NFPA 259, *Standard Test Method for Potential Heat of Building Materials*
(5) ASTM E84, *Standard Test Method for Surface Burning Characteristics of Building Materials*, or ANSI/UL 723, *Test for Surface Burning Characteristics of Building Materials*

5.3.2 Construction materials used in the boiler, engine, or turbine-generator buildings or other buildings critical to power generation or conversion should meet the definition of *noncombustible* or *limited combustible*, except for the following:

(1) Roof coverings, which should be as outlined in 5.3.4
(2) Limited use of translucent reinforced plastic panels as allowed by the Fire Protection Design Basis Document

5.3.3 The use of material that does not meet the definition of *noncombustible* or *limited combustible*, such as translucent reinforced plastic panels, is permitted in limited applications if the Fire Protection Design Basis Document and/or fire risk evaluation demonstrate that the material is acceptable.

5.3.4 Roof covering should be Class A in accordance with ASTM E108, *Standard Test Methods for Fire Tests of Roof Coverings*, or UL 790, *Tests for Fire Resistance of Roof Covering Materials*.

Copyright 2015 National Fire Protection Association (NFPA). Licensed, by agreement, for individual use and download on June 24, 2015 to LEADER AND READER for designated user PATTARAPORN SRITRAKOOL. No other reproduction or transmission in any form permitted without written permission of NFPA. For inquires or to report unauthorized use, contact licensing@nfpa.org.

Metal roof deck construction, where used, should be "Class I" or "fire classified."

5.3.5 Interior Finish.

5.3.5.1 Cellular or foamed plastic materials (as defined in Annex A of NFPA *101*) should not be used as interior finish.

5.3.5.2 Interior finish in buildings critical to power generation or conversion should be Class A.

5.3.5.3 Interior finish in buildings not critical to power generation or conversion should be Class A or Class B.

5.4 Smoke and Heat Venting, Heating, Ventilating, and Air Conditioning.

5.4.1 Smoke and Heat Venting.

5.4.1.1 General.

5.4.1.1.1 Smoke and heat vents are not substitutes for normal ventilation systems unless designed for dual usage and should not be used to assist such systems for comfort ventilation.

5.4.1.1.2 Smoke and heat vents should not be left open where they can sustain damage from high wind conditions.

5.4.1.1.3 Smoke and heat vents should be included in preventative maintenance or surveillance programs to ensure availability in emergency situations.

5.4.1.2 Heat Vents.

5.4.1.2.1 Heat vents should be provided for areas identified by the Fire Protection Design Basis Document. Where heat vents are provided, heat generated under fire conditions should be vented from its place of origin directly to the outdoors.

5.4.1.2.2 Heat vents in the boiler and turbine building are permitted to be provided through the use of automatic heat vents or windows at the roof eave line. Heat venting in areas of high combustible loading can reduce damage to structural components. *(See NFPA 204.)*

5.4.1.3 Smoke Vents.

5.4.1.3.1 Smoke venting should be provided for areas identified by the Fire Protection Design Basis Document. Where smoke venting is provided, smoke should be vented from its place of origin in a manner that does not interfere with the operation of the plant.

5.4.1.3.2* Separate smoke management or ventilation systems are preferred; however, smoke venting can be integrated into normal ventilation systems using automatic or manually positioned dampers and motor speed control. *(See NFPA 90A, NFPA 92, and NFPA 204.)* Smoke venting also is permitted to be accomplished through the use of portable smoke ejectors. A smoke management system should be utilized to mitigate the effects of smoke and heat during the early stages of a fire.

5.4.1.3.3 Consideration should be given to smoke venting for the following areas: control room, cable spreading room(s), switchgear room, and sensitive electronic equipment rooms.

5.4.1.3.4 In the areas with gaseous fire extinguishing systems, the smoke ventilation system should be properly interlocked to ensure the effective operation of the gaseous fire extinguishing system.

5.4.1.3.5 Smoke removal system dampers, where installed, normally are operable only from an area immediately outside of, or immediately within, the fire area served since it is desired to have entry into, and inspection of, the fire area by fire-fighting personnel prior to restoring mechanical ventilation to the fire area. Smoke removal system dampers are permitted to be operable from the control room if provisions are made to prevent premature operation, which can be accomplished using thermal interlocks or administrative controls.

5.4.1.3.6 The fan power supply wiring and controls for smoke exhaust should be located external to the fire area served by the fan or be installed in accordance with the Fire Protection Design Basis Document.

5.4.2 Normal Heating, Ventilating, and Air-Conditioning Systems.

5.4.2.1 For normal heating, ventilating, and air-conditioning systems, see NFPA 90A or NFPA 90B as appropriate.

5.4.2.2 Air conditioning for the control room should provide a pressurized environment to preclude the entry of smoke in the event of a fire outside the control room.

5.4.2.3 Plastic ducts, including listed fire-retardant types, should not be used for ventilating systems. Listed plastic fire-retardant ducts with appropriate fire protection are permitted to be used in areas with corrosive atmospheres.

5.4.2.4 Fire dampers (doors) compatible with the rating of the barrier should be provided at the duct penetrations in accordance with NFPA 90A to the fire area unless the duct is protected throughout its length by a fire barrier equal to the rating required of fire barrier(s) penetrated *(see Section 5.1)*.

5.4.2.5 Smoke dampers, where installed, should be installed in accordance with NFPA 90A.

5.4.2.6 The fresh air supply intakes to all areas should either be located so as to minimize the possibility of drawing products of combustion into the plant, or be provided with automatic closure on detection of smoke. Separation from exhaust air outlets, smoke vents from other areas, and outdoor fire hazards should all be considered.

5.5 Containment and Drainage.

5.5.1* Provisions should be made in all fire areas of the plant for removal of liquids directly to safe areas or for containment in the fire area without flooding of equipment and without endangering other areas. *(See Annex A of NFPA 15.)* Drainage and prevention of equipment flooding should be accomplished by one or more of the following:

(1) Floor drains
(2) Floor trenches
(3) Open doorways or other wall openings
(4) Curbs for containing or directing drainage
(5) Equipment pedestals
(6) Pits, sumps, and sump pumps

5.5.2* The provisions for drainage and any associated drainage facilities should be sized to accommodate all of the following:

(1) The spill of the largest single container of any flammable or combustible liquids in the area
(2) The maximum expected number of fire hose operating for a minimum of 10 minutes
(3) The maximum design discharge of fixed fire suppression systems operating for a minimum of 10 minutes

Independent of the above, the drainage systems should consider the maximum water introduced by the wash-down sys-

Copyright 2015 National Fire Protection Association (NFPA). Licensed, by agreement, for individual use and download on June 24, 2015 to LEADER AND READER for designated user PATTARAPORN SRITRAKOOL. No other reproduction or transmission in any form permitted without written permission of NFPA. For inquires or to report unauthorized use, contact licensing@nfpa.org.

tems. If this amount exceeds the drainage required for fire protection, it should govern the sizing of the drainage system. Additional precautions should be taken for belowgrade areas to prevent damage of equipment due to water buildup.

5.5.3 The drainage system for continuous fuel oil-fired boilers should consist of curbs and gutters arranged to confine the area of potential fuel oil discharge. Consideration also should be given to providing the same measures for coal-fired boilers using oil for ignition. Walking surfaces in the vicinity of burners should be made impervious to oil leakage by the use of checkered steel plate, sheet metal drip pans, or other means. Curbs in passageways should have ramps or steps or be otherwise constructed to present no obstacle to foot traffic. Gutter outlet pipes and all other drains should be trapped to prevent the passage of flames and permit the flow of oil. A clearance between the boiler front and the walk structure is required for the differential movement where the heated boiler elongates. This clearance space in the vicinity of the burners should be flashed and counter-flashed with sheet metal or otherwise arranged to allow movement and to redirect dripping oil, which can impinge on the boiler face.

5.5.4 Floor drainage from areas containing flammable or combustible liquids should be trapped to prevent the spread of burning liquids beyond the fire area.

5.5.5 Where gaseous fire suppression systems are installed, floor drains should be provided with adequate seals, or the fire suppression system should be sized to compensate for the loss of fire suppression agent through the drains.

5.5.6 Drainage facilities should be provided for outdoor oil-insulated transformers, or the ground should be sloped such that oil spills will flow away from buildings, structures, and adjacent transformers. Unless drainage from oil spills is accommodated by sloping the ground around transformers away from structures or adjacent equipment, consideration should be given to providing curbed areas or pits around transformers. The pit or drain system or both should be sized in accordance with 5.5.2. If a layer of uniformly graded stone is provided in the bottom of the curbed area or pit as a means of minimizing ground fires, the following should be addressed:

(1) Sizing of the pit should allow for the volume of the stone, keeping the highest level of oil below the top of the stone.
(2) The design should address the possible accumulation of sediment or fines in the stone.
(3) Overflow of the containment pit and/or curbing should be considered in reviewing drainage pathways away from critical structures. Common containment pits for multiple transformers should be avoided.

5.5.6.1 Rock-Filled Pits. Where rock-filled pits are used, the rock should periodically be loosened and turned as necessary to prevent filling of void spaces by dirt, dust, or silt. The frequency is dependent on area of the country and location near manufacturing facilities that generate dust or fly ash.

5.5.6.2 Open Pits. Where an open pit is used, one of the following forms of protection should be provided:

(1) Automatic sprinkler or water spray protection should be provided for the pit area designed to a discharge density of 0.15 gal/min·ft^2 (6 mm/min) over the area of the pit.
(2) A 12 in. (30 cm) thick layer of rock located between steel grating should be provided at the top of the pit. The rock used should be 1.5 in. (3.8 cm) or larger washed and uniformly sized rock (size No. 2, ASTM D 448, *Standard Classification for Sizes of Aggregate for Road and Bridge Construction*).

5.5.7 For facilities consisting of more than one generating unit that are not separated by a fire barrier *[see 5.1.1.3(15)]*, provisions such as a sloped floor, curb, or trench drain should be provided on solid floors where the potential exists for an oil spill, such that oil released from an incident in one unit will not expose an adjacent unit.

5.5.8 For environmental reasons, liquid discharges resulting from oil spills or operation of a fire suppression system might have to be treated (e.g., oil separation).

5.6 Emergency Lighting.

5.6.1 Emergency lighting should be provided for means of egress. *(See NFPA 101.)*

5.6.2 Emergency lighting should be provided for critical plant operations areas.

5.7 Lightning Protection. Lightning protection should be provided for those structures having a risk index (R) of 4 or greater when evaluated in accordance with NFPA 780.

Chapter 6 General Fire Protection Systems and Equipment

6.1 General. All fire protection systems, equipment, and installations should be dedicated to fire protection purposes.

6.2 Water Supply.

6.2.1* The water supply for the permanent fire protection installation should be based on providing a 2-hour supply for all of the following:

(1) Either of the following, whichever is greater:
  (a) The largest fixed fire suppression system demand
  (b) Any fixed fire suppression system demands that could reasonably be expected to operate simultaneously during a single event [e.g., turbine underfloor protection in conjunction with other fire protection system(s) in the turbine area, coal conveyor protection in conjunction with protection for related coal handling structures during a conveyor fire, adjacent transformers not adequately separated according to 5.1.4]
(2) The hose stream demand of not less than 500 gpm (1893 L/min)
(3) Incidental water usage for non–fire protection purposes

6.2.2* At least one reliable water supply should be provided. The Fire Protection Design Basis Document should identify the need for multiple supply sources. Factors to consider should include the following:

(1) Reliability of source
(2) Capacity of source
(3) Reliance on water-based fire protection systems
(4) Availability of alternate and backup sources
(5) Consequences of a loss in terms of property and generation

6.2.2.1* Potential sources to be considered include tanks, ponds, rivers, municipal supplies, and cooling tower basins.

Copyright 2015 National Fire Protection Association (NFPA). Licensed, by agreement, for individual use and download on June 24, 2015 to LEADER AND READER for designated user PATTARAPORN SRITRAKOOL. No other reproduction or transmission in any form permitted without written permission of NFPA. For inquires or to report unauthorized use, contact licensing@nfpa.org.

6.2.3 Each water supply should be connected to the station supply main or yard main by separate connections arranged and valve controlled to minimize the possibility of multiple supplies being impaired simultaneously.

6.2.3.1 If a single water supply is utilized, two independent connections should be provided. If a situation can arise in which the primary water supply can become unavailable (e.g., dewatering of penstocks), an auxiliary supply should be provided. Each supply should be capable of meeting the recommendations in 6.2.2.

6.2.4 Consideration of water quality can prevent long-term problems relating to fire protection water supply. For example, in some rivers and tributaries the existence of microorganisms limits the use of raw water for fire protection without treatment. Demineralized water and ash water should not be considered for use as a fire protection water source due to excessive corrosion and erosion characteristics.

6.2.5 Fire Pumps.

6.2.5.1 Where multiple fire pumps are required by the Fire Protection Design Basis Document, the pumps should not be subject to a common failure, electrical or mechanical, and should be of sufficient capacity to meet the fire flow requirements determined by 6.2.1 with the largest pump out of service.

6.2.5.2 Fire pumps should be automatic starting with manual shutdown, except as allowed in NFPA 20. The manual shutdown should be at the pump controllers only.

6.2.6 Water Supply Tanks.

6.2.6.1 If tanks are of dual-purpose use, a standpipe or similar arrangement should be provided to dedicate the amount determined by 6.2.1 for fire protection use only. *(See NFPA 22.)*

6.2.6.2 Where tanks are used, they should be filled from a source capable of replenishing the 2-hour supply for the fire protection requirement in an 8-hour period. The 8-hour (time) requirement for refilling can be permitted to be extended if the initial supply exceeds the minimum storage requirement on a volume per time ratio basis. It normally is preferred for the refilling operation to be accomplished on an automatic basis.

6.3 Valve Supervision. All fire protection water supply and system control valves should be under a periodic inspection program *(see Chapter 17)* and should be supervised by one of the following methods:

(1) Electrical supervision with audible and visual signals in the main control room or another constantly attended location.
(2) Locking valves open. Keys should be made available only to authorized personnel.
(3) Sealing valves open. This option should be followed only where valves are within fenced enclosures under the control of the property owners.

6.4 Supply Mains, Yard Mains, Hydrants, and Building Standpipes.

6.4.1 Supply Mains, Yard Mains, and Hydrants.

6.4.1.1 Supply mains, yard mains, and outdoor fire hydrants should be installed on the plant site. *(See NFPA 24.)* Hydrant spacing in main plant areas should be a maximum of 300 ft (91.4 m). Hydrant spacing in remote areas such as long-term coal storage should be a maximum of 500 ft (152.4 m).

6.4.1.2 Remotely located plant-related facilities should be reviewed on an individual basis to determine the need for fire protection. If excessively long extensions of underground fire mains are necessary for fire protection at these locations, it can be permitted to supply this need from an available service main in the immediate area. Where common supply piping is provided for service water and fire protection water supply, it should be sized to accommodate both service water and fire protection demands.

6.4.1.3 The supply mains should be looped around the main power block and should be of sufficient size to supply the flow requirements determined by 6.2.1 to any point in the yard loop considering the most direct path to be out of service. Pipe sizes should be designed to encompass any anticipated expansion and future water demands.

6.4.1.4 Indicator control valves should be installed to provide adequate sectional control of the fire main loop to minimize plant protection impairments.

6.4.1.5 Each hydrant should be equipped with a separate shutoff valve located on the branch connection to the supply main.

6.4.1.6 Interior fire protection loops are considered an extension of the yard main and should be provided with at least two valved connections to the yard main with appropriate sectional control valves on the interior loop.

6.4.1.7 It might be necessary for the fire department to draft from a body of water adjacent to the plant. However, the terrain and elevation above the water supply can make it difficult for drafting. Consideration should be given to installing a dry hydrant with adequate fire apparatus access.

6.4.2 Standpipe and Hose Systems.

6.4.2.1 Standpipe and hose systems should be installed in buildings and structures where deemed necessary by the Fire Protection Design Basis. *(See NFPA 14.)* The standpipe and hose system is an extension of the yard fire main and hydrant system. The hose stations should be capable of delivering the hose stream demand for the various hazards in buildings.

6.4.2.2 Fire main connections for standpipes should be arranged so that a fire main break can be isolated without interrupting service simultaneously to both fixed protection and hose connections protecting the same hazard or area. Choice of Class I, Class II, or Class III systems should be determined by a Fire Protection Design Basis. *(See NFPA 14.)*

6.4.2.3 The standpipe piping should be capable of providing minimum volume and pressure for the highest hose stations.

6.4.2.4 Due to the open arrangement of these plants, the locations of hose stations should take into account safe egress for personnel operating hose lines.

6.4.3 Hose Nozzles. Spray nozzles having shutoff capability and listed for use on electrical equipment should be provided on hoses located in areas near energized electrical equipment.

6.4.4 Hose Threads. Hose threads on hydrants and standpipe systems should be compatible with fire hose used by the responding fire departments.

6.5 Portable Fire Extinguishers. For first aid fire protection, suitable fire extinguishers should be provided. *(See NFPA 10.)*

Copyright 2015 National Fire Protection Association (NFPA). Licensed, by agreement, for individual use and download on June 24, 2015 to LEADER AND READER for designated user PATTARAPORN SRITRAKOOL. No other reproduction or transmission in any form permitted without written permission of NFPA. For inquires or to report unauthorized use, contact licensing@nfpa.org.

6.6 Fire Suppression Systems and Equipment— General Requirements.

6.6.1 Fire suppression systems and equipment should be provided in all areas of the plant as identified in Chapters 7 through 15 or as determined by the Fire Protection Design Basis Document. Fixed suppression systems should be designed in accordance with the following codes and standards unless specifically noted otherwise:

(1) NFPA 11, *Standard for Low-, Medium-, and High-Expansion Foam*
(2) NFPA 12, *Standard on Carbon Dioxide Extinguishing Systems*
(3) NFPA 13, *Standard for the Installation of Sprinkler Systems*
(4) NFPA 15, *Standard for Water Spray Fixed Systems for Fire Protection*
(5) NFPA 16, *Standard for the Installation of Foam-Water Sprinkler and Foam-Water Spray Systems*
(6) NFPA 17, *Standard for Dry Chemical Extinguishing Systems*
(7) NFPA 750, *Standard on Water Mist Fire Protection Systems*
(8) NFPA 2001, *Standard on Clean Agent Fire Extinguishing Systems*
(9) NFPA 2010, *Standard for Aerosol Fire Extinguishing Systems*

6.6.2 The selection of an extinguishing agent or a combination of extinguishing agents should be based on the following:

(1) The type of hazard
(2) The effect of agent discharge on equipment
(3) The health hazards

Personnel hazards created by the discharge of CO_2 should be considered in the design of the system. The design should take into account the immediate release of CO_2 into the protected area and the possibility of CO_2 leakage, migration, and settling into adjacent areas and lower elevations of the plant. See NFPA 12 for hazards to personnel. At a minimum, if CO_2 systems are provided, they should be provided with an odorizer for alerting personnel, and breathing apparatus should be provided for operators in areas that cannot be abandoned.

6.6.3 Fire Suppression System Safety Considerations.

6.6.3.1 It is imperative that safety in the use of any fire suppression system be given proper consideration and that adequate planning be done to ensure safety of personnel.

6.6.3.2 Potential safety hazards could include impingement of high velocity discharge on personnel, loss of visibility, hearing impairment, reduced oxygen levels that will not support breathing, toxic effects of the extinguishing agent, breakdown products of the extinguishing agent, and electric conductivity of water-based agents.

6.6.3.3 When working in areas (e.g., combustion turbine compartments) where actuation of the fire protection system could affect personnel safety, the fire extinguishing system should be locked out to prevent discharge of the system. A trouble indication should be provided when the system is locked out.

6.6.3.4 NFPA standards for the extinguishing systems used should be carefully studied and the personnel safety provisions followed. *(See NFPA 12.)*

6.6.3.4.1 Evacuation of a protected area is recommended before any special extinguishing system discharges.

6.6.3.4.2 Alarm systems that are audible above machinery background noise or that are visual or olfactory or a combination should be used where appropriate.

6.6.3.4.3 Personnel warning signs should be used as necessary.

6.6.3.4.4 Retroactive requirements for enhancing the safety of existing CO_2 systems are detailed in NFPA 12 paragraphs 4.3.2 (safety signs), 4.3.3.6 and 4.3.6.6.1 (lockout valves), and 4.5.6.1 (pneumatic time delays and pneumatic predischarge alarms).

6.7 Fire-Signaling Systems.

6.7.1 The type of protective signaling system for each installation and area should be determined by the Fire Protection Design Basis Document in consideration of hazards, arrangement, and fire suppression systems. Fire detection and automatic fixed fire suppression systems should be equipped with local audible and visual signals with annunciation in a constantly attended location, such as the main control room. Audible fire alarms should be distinctive from other plant system alarms. *(See NFPA 72.)*

6.7.2 Automatic fire detectors should be installed in accordance with *NFPA 72*.

6.7.3 The fire-signaling system or plant communication system should provide the following:

(1) Manual fire alarm devices (e.g., pull boxes or page party stations) installed in all occupied buildings. Manual fire alarm devices should be installed for remote yard hazards as identified by the Fire Protection Design Basis Document.
(2)*Plant-wide audible fire alarm or voice communication systems, or both, for purposes of personnel evacuation and alerting of plant emergency organization. The plant public address system, if provided, should be available on a priority basis.
(3) Two-way communications for the plant emergency organization during emergency operations.
(4) Means to notify the public fire department.

Chapter 7 Identification of and Protection Against Hazards

7.1 General. The identification and selection of fire protection systems should be based on the Fire Protection Design Basis Document. This chapter identifies fire and explosion hazards in fossil fueled electric generating stations and specifies the recommended protection criteria unless the Fire Protection Design Basis Document indicates otherwise.

7.1.1 Fire Protection Operation. With few exceptions, fire protection systems should be automatically actuated to ensure prompt operation. Manually activated systems could cause delays in response times unacceptable for most hazards.

7.2 Fuel Handling — Gas.

7.2.1* The storage and associated piping systems for gases in the gaseous or liquefied states should comply with NFPA 54, NFPA 55, NFPA 56, NFPA 58, and ASME B31.1, *Power Piping*.

7.2.2 The plant's fuel gas shutoff valve should be located in a remote area and accessible under emergency conditions. The valve should be provided with both manual and automatic closing capabilities locally, and remote closing capability from the control room. The valve should be arranged to fail closed on the loss of power or pneumatic control.

Copyright 2015 National Fire Protection Association (NFPA). Licensed, by agreement, for individual use and download on June 24, 2015 to LEADER AND READER for designated user PATTARAPORN SRITRAKOOL. No other reproduction or transmission in any form permitted without written permission of NFPA. For inquires or to report unauthorized use, contact licensing@nfpa.org.

7.2.3 Electrical equipment in areas with potentially hazardous atmospheres should be designed and installed in compliance with Articles 500 and 501 of *NFPA 70* and ANSI C2, *National Electrical Safety Code*.

7.2.4* Inerting. Prior to introducing fuel gas to, or removing fuel gas from, the fuel gas piping, inerting should be performed.

7.2.5* Maintenance, Modification, and Repair. The hazards associated with flammable gases, including those hazards arising from toxic constituents in the gas and asphyxiants, should be considered when performing maintenance, modifications, or repairs.

7.2.5.1 Fuel gas piping should be inerted in accordance with 7.2.4 prior to maintenance, modifications, or repair.

7.2.5.2 When performing maintenance, modification, or repair of piping that contains a flammable gas that has toxic constituents, or when inerting fuel gas piping with asphyxiants, the area should be ventilated or considered a confined space as regulated by U.S. Department of Labor, OSHA 29 CFR 1910.146, "Permit Required Confined Space Standard."

7.3 Fuel Handling — Oil.

7.3.1 Fuel oil storage, pumping facilities, and associated piping should comply with NFPA 30, NFPA 31, and ASME B31.1, *Power Piping*.

7.3.2 Internal tank heaters needed to maintain oil pumpability should be equipped with temperature sensing devices that alarm in a constantly attended area prior to the overheating of the oil.

7.3.3 External tank heaters should be interlocked with a flow switch to shut off the heater if oil flow is interrupted.

7.3.4 Tank filling operations should be monitored to prevent overfilling.

7.3.5 While oil unloading operations are in progress, the unloading area should be manned by personnel properly trained in the operation of pumping equipment, valving, and fire safety.

7.3.6 Pump installations should not be located within tank dikes.

7.3.7 Electrical equipment in areas with potentially hazardous atmospheres should be designed and installed in compliance with NFPA 30, Articles 500 and 501 of *NFPA 70*, and ANSI C2, *National Electrical Safety Code*.

7.3.8 To prevent hazardous accumulations of flammable vapors, ventilation for indoor pumping facilities for flammable liquids or combustible liquids at or above their flash point should provide at least 1 cfm of exhaust air per ft^2 of floor area ($0.30\ m^3/min/m^2$), but not less than 150 ft^3/min ($0.071\ m^3$/sec). Ventilation should be accomplished by mechanical or natural exhaust ventilation arranged in such a manner to include all floor areas or pits where flammable vapors can collect. Exhaust ventilation discharge should be to a safe location outside the building.

7.3.9 Fire Protection.

7.3.9.1 Indoor fuel oil pumping or heating facilities, or both, should be protected with automatic sprinklers, water spray, water mist system, foam-water sprinklers, compressed air foam systems, or gaseous total flooding system(s). Local application dry chemical systems are permitted to be used in areas that normally do not have re-ignition sources, such as steam lines or hot boiler surfaces.

7.3.9.2 The provisions of foam systems for outdoor storage tank protection should be considered in the Fire Protection Design Basis Document. The Fire Protection Design Basis Document should regard exposure to other storage tanks and important structures, product value, and resupply capability, as well as the anticipated response and capabilities of the local fire brigade.

7.3.9.3 Outdoor fuel oil handling and storage areas should be provided with hydrant protection in accordance with Section 6.4.

7.4 Fuel Handling — Coal.

7.4.1 Storage.

7.4.1.1* Coal storage piles are subject to fires caused by spontaneous heating of the coal. The coals most susceptible to self-heating are those with high pyritic content and high intrinsic moisture and oxygen content, such as low-rank coals. The mixing of high pyritic coals with high moisture and oxygen coals increases self-heating.

7.4.1.2 There are measures that can be taken to lessen the likelihood of coal pile fires. These measures are dependent on the type and rank of coal. Among the more important are the following:

(1) Short duration, active, or "live" storage piles should be worked to prevent dead pockets of coal, a potential source of spontaneous heating.
(2) Coal piles should not be located above sources of heat, such as steam lines, or sources of air, such as manholes.
(3) Coal placed in long-term storage should be piled in layers, appropriately spread, and compacted prior to the addition of subsequent layers to reduce air movement and to minimize water infiltration into the pile.
(4) Different types of coal that are not chemically compatible should not be stored in long-term storage piles.
(5) Access to coal storage piles should be provided for fire-fighting operations and for pulling out hot pockets of coal. Where coal storage barns or domes are used to enclose storage piles, the design of the structure should include dedicated space to allow small vehicles to access all areas of the coal pile. The design should prevent stored coal from encroaching on the dedicated space.

7.4.1.3 Where coal storage barns or domes are used to enclose storage piles, the fire detection, fire protection, fire alarm, dust collection, dust suppression, explosion venting, and housekeeping recommendations contained herein for coal handling areas and structures should be considered. The plant-specific features provided for the coal barn/dome should be as determined during the Fire Protection Design Process Document. *(See Chapter 4.)*

7.4.2 Bins, Bunkers, and Silos. The recommendations of 7.4.2 should be considered to reduce the probability of serious fire. *(See NFPA 85.)*

7.4.2.1* Storage structures should be of noncombustible construction and designed to minimize corners, horizontal surfaces, or pockets that cause coal to remain trapped and present a potential for spontaneous combustion. Bins, bunkers, and silos should be designed with access ports to allow manual fire-fighting activities such as the use of a piercing rod

Copyright 2015 National Fire Protection Association (NFPA). Licensed, by agreement, for individual use and download on June 24, 2015 to LEADER AND READER for designated user PATTARAPORN SRITRAKOOL. No other reproduction or transmission in any form permitted without written permission of NFPA. For inquires or to report unauthorized use, contact licensing@nfpa.org.

hand line for delivery of fire-fighting agents with water. Access ports should be provided around the bunker or silo to allow direct attack on the fire using the piercing rod. Silos greater than 50 ft (15.2 m) in height should be provided with access ports at multiple elevations.

7.4.2.2* During planned outages, coal bins, bunkers, or silos should be emptied to the extent practical.

7.4.2.3* The period of shutdown requiring emptying of the bins depends on the spontaneous heating characteristics of the coal. Spontaneous heating can be slowed by minimizing air flow through the bins by such means as inerting, filling the bins with high-expansion foam, or sealing the surface of the coal with an appropriate binder/sealer designed for this purpose.

7.4.2.4* During idle periods, flammable gas levels, CO levels, and temperatures should be monitored.

7.4.2.5 Once spontaneous heating develops to the fire stage, it becomes very difficult to extinguish the fire short of emptying the bin, bunker, or silo. Therefore, provisions for emptying the bin, bunker, or silo should be provided. This unloading process might take the form of conveyors discharging to a stacking out pile. Another method would be to use flanged openings for removing the coal if adequate planning and necessary equipment have been provided. Removing hot or burning coal can lead to a dust explosion if a dust cloud develops. Proper preplanning should be developed to prevent a dust cloud, such as covering the coal with a blanket of high-expansion foam, water mist, water spray with fire-fighting additives, dust suppression, or dust collection.

7.4.2.6* If fire occurs in a silo, it is necessary to initiate manual actions for suppression and extinguishment. The following fire-fighting strategies have been successfully employed (depending on the specific circumstances and type of coal used):

(1) Use of fire-fighting additives such as Class A foams, penetrants, or wetting agents and water additives
(2) Injection of inert gas
(3) Emptying the silo through the feeder pipe to a safe location (inside or outside the powerhouse) and trucking away the debris

7.4.2.6.1 The following fire-fighting strategies should be taken into consideration:

(1) Water has been used successfully to control bunker and silo fires. However, the possibility of an explosion exists under certain circumstances if the water reaches the coal in a hot spot. Therefore, water is not a recommended fire-fighting strategy for these types of fire events. The amount of water delivered to a silo in a stream can create structural support problems. However, use of fire-fighting additives with water can be highly effective for coal fires, especially sub-bituminous coal fires. This use of fire-fighting additives typically results in significantly less water being delivered into the silo due to the enhanced fire suppression properties of the agent and subsequent shorter delivery period.
(2) Steam-smothering has also been used to control bunker and silo fires on marine vessels. All openings need to be sealed prior to the introduction of steam, which is rarely possible at electric generating plants due to the relatively porous nature of the equipment. The use of steam introduces high temperature and moisture that could increase the possibility of spontaneous combustion; therefore, this strategy is not recommended.
(3) Locating silo hot spots and extinguishing them before the coal leaves the silo is an accepted practice. The coal hot spots are detected and extinguished. If, as the coal drops down through the silo, additional hot spots are detected, coal flow should be stopped and the hot spots extinguished. If the hot spots are exposed during the lowering of the coal, potential for dust explosions is increased.

7.4.2.7 Care should be taken where working in enclosed areas near coal bins, bunkers, or silos in confined areas since spontaneous heating of coal can generate gases that are both toxic and explosive. Fixed or portable carbon monoxide monitoring should be provided to detect spontaneous heating and hazardous conditions.

7.4.2.8 Dusttight barriers should be provided between the boiler house and the areas of the coal handling system above the bin, bunker, or silo.

7.4.2.9 It might not be practical to install explosion vents on a coal bin, bunker, and silo. Typical silo designs do not have sufficient area above the coal level for properly designed explosion vents. Vents would present an exposure hazard to any personnel in adjacent areas *(see NFPA 654.)* If explosion vents are considered, they should be designed in accordance with NFPA 68.

7.4.3* Dust Suppression and Control.

7.4.3.1* Coal dust generated due to coal handling constitutes a fire and explosion hazard that should be controlled by one or more of the following methods:

(1) A dust collection system
(2) A dust suppression system
(3) An open-air construction
(4) Passive design features of the conveyor chutes and dust hoods to minimize generation of dust and spillage of coal at the transfer points
(5) Routine cleaning of coal handling areas

The frequency of cleaning activities is plant specific based on re-fueling activities, type of coal, space construction features, et cetera. Dust accumulation on overhead beams and joists contributes significantly to the secondary dust cloud. Other surfaces, such as the tops of ducts and large equipment, can also contribute significantly to the dust cloud potential. Due consideration should be given to dust that adheres to walls, since it is easily dislodged. Attention and consideration should also be given to other projections such as light fixtures, which can provide surfaces for dust accumulation.

7.4.3.2* Where dust collection or suppression systems are installed to prevent hazardous dust concentration, appropriate electrical and mechanical interlocks should be provided to prevent the operation of coal handling systems prior to the starting and sustained operation of the dust control equipment.

7.4.3.3 Dust suppression systems usually consist of spray systems using water, surfactants, binders, or a combination of these to reduce the dust generation of coal handling operations. The sprays are normally applied at or near those locations where the coal is transferred from one conveyor to another and at stack-out points.

7.4.3.4 Dust collectors should be located outside. For dust collection systems provided for handling combustible dusts,

Copyright 2015 National Fire Protection Association (NFPA). Licensed, by agreement, for individual use and download on June 24, 2015 to LEADER AND READER for designated user PATTARAPORN SRITRAKOOL. No other reproduction or transmission in any form permitted without written permission of NFPA. For inquires or to report unauthorized use, contact licensing@nfpa.org.

see NFPA 654. Other recommendations for reducing the probability of explosion and fire from coal dust are as follows:

(1) Fans for dust collectors should be installed downstream of the collectors so that they handle only clean air.
(2) For dust collectors vented to the outside, see NFPA 68. Explosion suppression systems are permitted to be provided for dust collection systems that cannot be safely vented to the outside. *(See NFPA 69.)*
(3) Dust collection hoppers should be emptied prior to shutting down dust removal systems to reduce the likelihood of collector fires originating from spontaneous heating in the dust hopper.
(4) Dust collectors should not discharge into inactive coal storage bins, bunkers, or silos.
(5) High-level detection with an annunciator alarm should be provided for the dust hoppers.
(6) Monitoring and trending for carbon monoxide should be provided for dust collectors to detect spontaneous combustion.

7.4.3.5 Cleaning methods such as vigorous sweeping of dust or blowing down with steam or compressed air should not be used since these methods can produce an explosive atmosphere. Preferred cleaning methods would use appropriate portable or fixed pipe vacuum cleaners of a type approved for dust hazardous locations or low velocity water spray nozzles and hose.

7.4.4 Coal Conveyors.

7.4.4.1 Coal conveyor belts should be of material designed to resist ignition. U.S. Mine Safety and Health Administration and Canadian Bureau of Mines Standards for fire-retardant conveyor belt materials should be used as a guide. However, "fire-retardant" belt materials will burn and therefore might require additional fire protection.

7.4.4.2 Each conveyor system should be arranged to automatically shut off driving power in the event of belt slowdown of greater than 20 percent or misalignment of belts. In addition, a complete belt interlock shutdown system should be provided so that, if any conveyor stops, the power to all conveyor systems feeding that belt would be shut down automatically.

7.4.4.3 Hydraulic systems should use only listed fire-retardant hydraulic fluids. Where unlisted hydraulic fluids must be used, consideration should be given to protection by a fire suppression system.

7.4.4.4 Foreign materials pose a threat to crushers, pulverizers, and feeders by interrupting the flow of coal or by causing sparks capable of igniting coal dust/air mixtures. Methods of removing tramp metals and other foreign materials include magnetic separators, pneumatic separators, and screens. Means for removing such foreign material should be provided as early in the coal handling process as possible.

7.4.4.5 Prior to extended idle periods, the conveyor system should be cleared of coal.

7.4.5 Coal Conveying and Handling Structures.

7.4.5.1 Coal conveying and handling structures and supports should be of noncombustible construction.

7.4.5.2 The accumulation of coal dust in enclosed buildings can be reduced by designing structural members such that their shape or method of installation minimizes the surface area where dust can settle. Consideration should be given to installing structural members exterior to the enclosure. Access should be provided to facilitate cleaning of all areas.

7.4.5.3 For explosion venting for enclosed structures, see NFPA 68.

7.4.5.4 Provisions should be made for de-energizing both lighting and electrical power circuits without requiring personnel to enter dust-producing sections of the plant during emergencies.

7.4.5.5 Areas of the coal handling system requiring heat should use approved heaters suitable for hazardous areas. The heating equipment should be kept free of dusts and should be designed to limit surface temperature to 329°F (165°C).

7.4.5.6 Electrical equipment within coal handling areas should be approved for use in hazardous locations Class II, Division 1 or Division 2, Group F. *(See Article 502 of NFPA 70.)* Electrical equipment subject to accumulations of methane gas or carbon monoxide should also be listed and installed, as appropriate, for use in hazardous locations Class I, Division 2, Group D. *(See Articles 500 and 501 of NFPA 70 and Section 127 of ANSI C2, National Electrical Safety Code.)*

7.4.5.7 Static electricity hazards should be minimized by the permanent bonding and grounding of all conductive equipment, including duct work, pulleys, take-up reels, motor drives, dust collection equipment, and vacuum cleaning equipment. *(See NFPA 77.)*

7.4.6 Fire Protection.

7.4.6.1 Automatic sprinkler or water spray fixed systems should be provided for coal handling structures that are critical to power generation and subject to accumulations of coal or coal dust. Automatic sprinkler systems should be designed for a minimum of 0.25 gpm/ft^2 (10.2 mm/min) density over a 2500 ft^2 (232 m^2) area. If water spray fixed systems are used to protect structures, the same densities should be used.

7.4.6.2* Automatic sprinkler or water spray fixed systems should be provided for coal conveyors that are critical to continuous power generation. System coverage should include transfer points (tail dust hoods and head chutes). Sprinklers should be designed for a minimum of 0.25 gpm/ft^2 (10.2 mm/min) density over 2000 ft^2 (186 m^2) of enclosed area or the most remote 100 linear ft (30 m) of conveyor structure up to 2000 ft^2 (186 m^2). For water spray design criteria, see NFPA 15. Water spray systems should be considered for enclosed conveyors that are inclined because of the greater potential for rapid fire spread.

7.4.6.2.1 If a sprinkler system is used to protect the coal conveyor, particular care should be exercised in locating closed sprinkler heads so that they will be in the path of the heat produced by the fire and still be in a position to provide good coverage of all belt surfaces along the conveyor. See NFPA 15. The conveyor width and other sprinkler obstructions should be considered in protection of the return belt and other floor level equipment. See NFPA 13 for positioning of sprinklers to avoid obstructions. Where sprinklers cannot provide adequate coverage due to obstructions, a water spray system using above- and below- belt nozzles should be considered instead of a sprinkler system.

7.4.6.2.2 Conveyors that are below grade or enclosed are extremely hazardous to maintenance or fire-fighting personnel in the event of a fire. Automatic water spray or sprinkler systems

Copyright 2015 National Fire Protection Association (NFPA). Licensed, by agreement, for individual use and download on June 24, 2015 to LEADER AND READER for designated user PATTARAPORN SRITRAKOOL. No other reproduction or transmission in any form permitted without written permission of NFPA. For inquires or to report unauthorized use, contact licensing@nfpa.org.

should be provided for these conveyors even though they might not be critical to plant operations.

7.4.6.2.3 Actuation of water spray or sprinkler systems should shut down the conveyor belt involved and all conveyor belts feeding the involved belt.

7.4.6.2.4 The sprinkler or water system control valve should be located in an area or enclosure separate from the hazard.

7.4.6.2.5 Dust collectors and fans should automatically shut down along with other related equipment upon detection of fire.

7.4.6.2.6 Draft barriers installed at the end and midpoints of enclosed conveyors and between separate sprinkler and water spray systems where the length of the conveyor requires multiple systems should be considered in the Fire Protection Design Basis Document. Draft barriers will improve the response time of installed automatic sprinkler or detection systems and minimize the chimney effects in the event of fire.

7.4.6.3 Stacker-reclaimer and barge/ship unloader conveyors present unique fire protection concerns. Protection of the equipment and safety of the personnel is made more difficult due to the movement-in-place capabilities of the equipment and its mobility and movement along a fixed rail system. Provision of hydrants in the area might not be sufficient protection primarily due to the extreme delay in response in the event of fire emergency and the difficulty in reaching all areas involved in a fire with hand-held hose equipment.

7.4.6.4 Consideration should be given to the installation of an automatic water spray or sprinkler system over the conveyor belt and striker plate areas within the stacker-reclaimer. The water supply could be from a 3000 gal to 5000 gal (11,355 L to 18,925 L) capacity pressure tank located on-board. A fire department pumper connection should be provided so connection can be made to the fire hydrants in the area during down or repair periods to provide a more adequate water supply. Consideration should be given to protecting enclosed electrical control cabinets by a pre-engineered fixed automatic gaseous-type suppression system activated by a fixed temperature detection system.

7.4.6.5* Bag-type coal dust collectors that are located inside buildings or structures should be protected with automatic sprinkler or water spray systems inside of the collectors.

7.4.6.5.1 Sprinklers for bag-type dust collectors should be designed for ordinary hazard systems. Sprinkler and water spray systems should be designed for a density of 0.20 gpm/ft^2 (8.1 mm/min) over the projected plan area of the dust collector. Use of fire-fighting additives should be considered for sub-bituminous coal dust collectors.

7.4.6.5.2 Protection inside dust collectors should include the clean air plenum and the bag section. If the hopper is shielded from water discharge, sprinklers also should be provided in the hopper section.

7.4.6.5.3 Consideration should be given to providing automatic sprinkler systems for bag-type dust collectors located outdoors that do the following:

(1) Are in continuous operation.
(2) Process large amounts of coal dust.
(3) Have limited access for manual fire fighting.
(4) Are critical to plant operation.

7.4.6.5.3.1 An example of limited access would be collectors that have catwalks for access.

7.4.6.6 Consideration should be given to providing detection-only systems on non-critical conveyors to facilitate a manual response.

7.5 Steam Generator. For boiler-furnaces, see NFPA 85.

7.5.1 Fire Protection.

7.5.1.1 Boiler-furnaces with multiple oil-fired burners or that use oil for ignition should be protected with automatic sprinkler, water spray, foam, foam-water sprinkler systems, or compressed air foam systems covering the burner front oil hazard.

7.5.1.2 Boiler front fire protection systems should be designed to cover the fuel oil burners and igniters and adjacent fuel oil piping and cable a 20 ft (6.1 m) distance from the burner and igniter, including structural members and walkways at these levels. Additional coverage should include areas where oil can collect. Sprinkler and water spray systems should be designed for a density of 0.25 gpm/ft^2 (10.2 mm/min) over the protected area. Compressed air foam systems should be designed and installed in accordance with NFPA 11 and their listing for the specific hazards and protection objectives specified in the listing.

7.5.2 Pulverizers.

7.5.2.1 For pulverized fuel systems, see NFPA 85.

7.5.2.2 Carbon monoxide gas detection systems should be considered for pulverizers as an early warning for conditions leading to fires and explosions.

7.5.2.3 Pulverizer explosion mitigation methods to consider include inerting and temperature control.

7.5.2.4 Personnel warning systems should be considered during pulverizer startup, shutdown, and trip.

7.5.3 Boiler Feed Pumps.

7.5.3.1 Coverage of steam-driven boiler feed pumps should include oil lubrication lines, bearings, and oil reservoirs. Accidental water discharge on bearing points and hot turbine parts should be considered. If necessary, these areas are permitted to be protected by shields and casing insulation with metal covers. Boiler feed pumps that are electric motor-driven, with lubricating or hydraulic oil hazards, can require protection depending on the quantity of oil, oil pressure, or exposure to other equipment.

7.5.3.2 Hydraulic and lubricating oil hazards associated with boiler feed pumps that are driven with steam turbines should be protected in accordance with 7.7.4.1. The use of a listed fire-resistant lubricant and hydraulic fluid can eliminate the need for fire protection systems.

7.5.3.3 Curbing or drainage or both should be provided for the steam-driven boiler feed pump oil reservoirs in accordance with Section 5.5.

7.6 Flue Gas.

7.6.1 Forced Draft, Induced Draft, and Flue Gas Recirculation Fans.

7.6.1.1 Coverage of steam-driven fans should include oil lubrication lines, bearings, and oil reservoirs. Accidental water discharge on bearings points and hot turbine parts should be considered. If necessary, these areas can be permitted to be

Copyright 2015 National Fire Protection Association (NFPA). Licensed, by agreement, for individual use and download on June 24, 2015 to LEADER AND READER for designated user PATTARAPORN SRITRAKOOL. No other reproduction or transmission in any form permitted without written permission of NFPA. For inquires or to report unauthorized use, contact licensing@nfpa.org.

protected by shields and casing insulation with metal covers. Water spray systems for steam turbine–driven forced draft and induced draft fans should be designed for a density of 0.25 gpm/ft^2 (10.2 mm/min) over the oil containment equipment surface. Water spray systems should be designed for 0.25 gpm/ft^2 (10.2 mm/min) for a minimum 20 ft (6.1 m) from the hazard. Compressed air foam systems should be designed and installed in accordance with NFPA 11 and their listing for the specific hazards and protection objectives specified in the listing. Combustible oil hazards associated with forced and induced draft fans driven with steam turbines should be protected with automatic sprinkler, water spray, foam-water sprinkler systems, or compressed air foam systems.

7.6.1.2 Forced draft fans, induced draft fans, and flue gas recirculation fans should use a listed fire-resistant fluid for hydraulic drives. Where nonapproved hydraulic fluids are used, protection should be provided as described in 7.6.1.1.

7.6.2 Regenerative Air Heaters.

7.6.2.1 Fires have occurred in air heaters after the accumulation of appreciable quantities of unburned combustibles on plate surfaces resulting from incomplete combustion of fuel in the boiler. Incomplete combustion is most likely to occur during startup. Incomplete combustion also can occur during load changes, periods of low firing rate, or normal operation due to unstable or over-rich firing.

7.6.2.2 Fire-loss experience does not presently indicate the need for special protection for other than regenerative-type air heaters. Regenerative-type air heater fires have occurred when firing on all types of fuel. Fires have occurred most frequently when firing oil or shortly after changing to pulverized coal from oil.

7.6.2.3* Temperature sensors should be provided in the inlet and outlet ducts for both flue gas and air. An alarm should be provided in the control room to alarm when air or flue gas temperatures exceed 50°F (28°C) above normal operating temperature. Temperature sensors alone might not be adequate to provide early warning of a fire in an air heater. In large air heaters, air flow rates are high enough so that a fire will be well developed before the temperature increases enough to alarm and warn the operator. The length of time the operator has to take action is greatly reduced, and severe damage can occur. The installation of a special detection system can allow operators time to quickly detect a fire, isolate the air heater, open drains, and activate the water spray system.

7.6.2.4 A minimum of one observation port should be provided in the inlet and/or outlet ducts for both flue gas and air. Large air heaters can require more than one observation port. Observation ports should be placed such that they are accessible for viewing the rotor or stator surface.

7.6.2.5 A manual water spray system should be provided to protect the rotor or stator. The water spray system should be capable of being activated from the control room or from the air heater area (control valve should be easily accessible) or both. When the rotor or stator is horizontal, water spray applied to the upper surface can be expected to flow by gravity down over plate surfaces. A minimum density of 0.60 gpm/ft^2 (24.4 mm/min) is recommended. Where the rotor or stator is vertical, water spray should be applied to both sides to obtain adequate penetration. A minimum density of 0.30 gpm/ft^2 (12.2 mm/min) is recommended on both sides. Water wash systems might not be adequate to give full coverage because of rotor drive failure.

7.6.2.6 Access hatches for the use of hose streams should be provided. Hatches should be designed for quick access. A minimum of one hatch should be provided per 10 ft (3.0 m) of rotor or stator diameter. For horizontal shaft air heaters, access should be provided on both sides of the rotor or stator. For vertical shaft units, access hatches should be provided above the rotor or stator with one hatch below for units under 20 ft (6.1 m) diameter and two hatches below for units 20 ft (6.1 m) or more in diameter.

7.6.2.7 Drainage should be provided to remove suppression water to a safe area. Drains from air heaters, ducts, or both should be accessible or controlled by remotely operated valves.

7.6.2.8 A zero speed switch with alarm in the control room should be provided on the rotor shaft or on the output shaft from the fluid coupling or gear reducer. A zero speed alarm warns of stoppage of the rotor or air hoods. This stoppage could be due to failure of the drive motor or coupling that will lead to overheating of a section of the rotor or stator, which can result in a fire. Stoppage also can be caused by high temperatures generated by a fire that has caused the rotor to bind against the housing or the air hoods to bind against the stator.

7.6.3 Flue Gas Bag–Type Dust Collectors.

7.6.3.1 Flue gas bag–type dust collectors (also known as fabric filters) can be damaged by overheating or fire. Filter media can be damaged by flue gases entering at a temperature above the operating temperature of the filter media. Fires have been caused by incomplete combustion in the boiler resulting in carryover of burning particulate igniting the filter media and by maintenance operations such as cutting and welding.

7.6.3.2 Collectors equipped with bags that have an operating temperature limit exceeding 400°F (204°C) should be subdivided into compartments by noncombustible partitions. The partitions should extend through the flue gas bag area. The filter bag area provided in each compartment should be such that the fabric filter systems will not limit boiler load with one compartment fully isolated to repair damaged filter bags. The pressure drop across the fabric filter system should not increase significantly when one compartment is isolated.

7.6.3.3 Collectors equipped with other types of bags should be subdivided into compartments by partitions of 30-minute fire resistance if no automatic sprinkler protection is provided or by noncombustible partitions if sprinklers are provided. Partitions should extend from the hopper, through the bag area, to the clean air plenum. Protection inside dust collectors should include the bag area. The design density should be 0.20 gpm/ft^2 (8.1 mm/min) over the plan area of the dust collector.

7.6.3.4 If automatic sprinkler protection is provided, structural design of the collector should take into consideration maximum water loading. A method should be provided for drainage of water from the hoppers.

7.6.3.5 Each compartment should be equipped with a heat detection system, arranged to alarm in a constantly attended area at a temperature 50°F (28°C) above normal operating temperature.

7.6.3.6 One of the following should be provided to prevent high temperature inlet flue gas from damaging the bags:

(1) Where permitted for emergency conditions, an automatic isolation valve and bypass duct to divert inlet gas streams around the flue gas bag collector

Copyright 2015 National Fire Protection Association (NFPA). Licensed, by agreement, for individual use and download on June 24, 2015 to LEADER AND READER for designated user PATTARAPORN SRITRAKOOL. No other reproduction or transmission in any form permitted without written permission of NFPA. For inquires or to report unauthorized use, contact licensing@nfpa.org.

(2) A flue gas tempering water spray system in the duct between the boiler and the flue gas bag collector

7.6.3.7 Manual fire-fighting equipment should be available to personnel performing maintenance on a collector. A standpipe system should be provided such that each compartment is accessible by at least one hose system.

7.6.3.8 Access doors or hatches for manual fire-fighting and viewing ports should be provided for all compartments.

7.6.4 Electrostatic Precipitators.

7.6.4.1 Electrostatic precipitators can be damaged by heat from a fire. High temperatures can warp collecting plates, decreasing collection efficiency. Combustibles can be generated by over-rich boiler-furnace firing. Solid and liquid products of incomplete combustion can be collected on plate surfaces. Ignition can occur by arcing in the electrostatic precipitator.

7.6.4.2* Temperature sensors should be provided in the inlet and outlet ducts. Alarms should be provided in the control room to indicate abnormal operating temperatures.

7.6.4.3 Transformer-rectifier sets should use high fire point insulating fluids or should be of the dry type. If mineral oil insulating fluids are used, hydrants or standpipes should be located so that each transformer-rectifier set can be reached by at least one hose stream. In addition, either of the following should be provided:

(1) Automatic sprinkler or automatic water spray protection. Fire protection water spray systems provided for transformer-rectifier sets should be designed for a density of 0.25 gpm/ft^2 (10.2 mm/min) over the exposed surface of the transformer-rectifier set. Automatic sprinkler systems should be designed for a density of 0.25 gpm/ft^2 (10.2 mm/min) over 3500 ft^2 (325 m^2). The drain system should be capable of handling oil spillage plus the largest design water flow from the fire protection system.
(2) Fire barrier(s) or spatial separation in accordance with Chapter 5. *(See 5.1.4 and 5.1.5.)*

7.6.5* Scrubbers, Scrubber Buildings, and Exhaust Ducts.

7.6.5.1 General. Scrubbers are the main component for flue gas desulfurization (FGD) processes, which are frequently used to maintain low sulfur emissions. Auxiliary equipment associated with the FGD process is often enclosed in scrubber buildings constructed around the lower elevations of the scrubber. Some scrubbers are entirely enclosed in the scrubber building as well. Exhaust ducts provide a flow path from the scrubber outlet to the stack. Fires have occurred in scrubbers with combustible lining, combustible packing, or both. The fires occurred during outages and were caused by cutting and welding. Attempts to manually fight the fires were not successful since smoke and heat prevented access to the scrubber. Where scrubbers were located in buildings, there was extensive smoke and heat damage to the building. Fires can also occur in ductwork.

7.6.5.2 Scrubber Buildings.

7.6.5.2.1 Buildings should be constructed of materials meeting the criteria outlined in Section 5.3.

7.6.5.2.2 Where scrubbers have combustible linings, one of the following methods of protection for the building should be provided:

(1) Automatic sprinkler protection at ceiling level sized to provide 0.20 gpm/ft^2 (8.1 mm/min). The area of operation should be the area of the building or 10,000 ft^2 (930 m^2). Where draft curtains are provided, the area of operation can be reduced to the largest area subdivided by draft curtains.
(2) The roof deck and supporting steel should be protected with a 1-hour fireproof coating. Building columns should be protected with a 2-hour fireproof coating from the roof to 20 ft (6.1 m) below the roof. Columns adjacent to scrubber openings should be protected from the roof to below the scrubber opening. Automatic or remotely actuated heat venting should be provided with a vent area of 1 ft^2 (0.09 m^2) per 50 ft^2 (4.6 m^2) of floor area.

7.6.5.2.3 If a listed less flammable fluid is not used, hydraulic and lubricating oil equipment should be protected as described in 7.7.4.

7.6.5.3 Scrubbers.

7.6.5.3.1 Materials of Construction. Scrubbers, internal piping, and ducts should be constructed of noncombustible materials, or the recommendations of 7.6.5.3.2 and 7.6.5.3.3 should be incorporated. All equipment lined with combustible material should be identified with warning signs or placards.

7.6.5.3.2 During outages, all of the following should be done:

(1) Cutting, welding, and other hot work is the most likely cause of ignition. See also NFPA 51B. At a minimum, strict work controls should be enforced. Packing should be covered with fire-resistant blankets over sheet metal. Blankets should be kept wet. A charged hose and fire watch should be provided at the work area.
(2) The scrubber reservoir should be maintained full if possible or returned to service as quickly as possible during an outage.
(3) The absorber inlet and outlet damper should be closed during cutting, welding, or other hot work to reduce the induced draft. When the scrubber outlet damper is open, no hot work should be permitted in the downstream duct or stack.

7.6.5.3.3 Fire Protection. A fire protection system should be provided during outages for absorber vessels containing combustible packing or lining and should include the following:

(1) The fire protection system can be the spray system designed for normal scrubber operation or a specially designed fire protection system. Water spray systems should be designed such that spray patterns cover the lining and packing. Where scrubber spray systems are used for fire protection, system components internal to the scrubber should be noncombustible. The water supply should be from a reliable source available during the outage.
(2) Duct systems. A fire protection system should be provided during maintenance operations. A fixed protection system on the scaffolding is recommended. The system should be designed to protect the work platform and twice the area that can be reached by workers on the platform.
(3) Due to the unique design and operating features of scrubbers, fire protection designers should consult with the scrubber manufacturer for guidance as to material selection for internal fire protection systems and specific protection design features.

Copyright 2015 National Fire Protection Association (NFPA). Licensed, by agreement, for individual use and download on June 24, 2015 to LEADER AND READER for designated user PATTARAPORN SRITRAKOOL. No other reproduction or transmission in any form permitted without written permission of NFPA. For inquires or to report unauthorized use, contact licensing@nfpa.org.

(4) Standpipes should be provided such that 1½ in. (3.8 cm) hose is available at scrubber access hatches that are open during outages.
(5) The introduction of combustible materials into the scrubber should be limited and controlled during maintenance and inspection outages.

7.6.6 Conveyors Handling Noncombustible Material. Conveyors handling noncombustible materials are typically components of FGD systems and fluidized bed boiler systems. Materials typically include limestone and gypsum. These conveyors should meet the recommendations of 7.4.4.1 through 7.4.4.3, 7.4.5.1, 7.4.6.1 through 7.4.6.4, and 7.4.6.6.

7.6.7 Activated Carbon Injection Systems.

7.6.7.1 General. Activated carbon injection (ACI) systems are used on some coal-fired plants to adsorb mercury from the flue gas. Powdered activated carbon (PAC) is stored in silos and pneumatically conveyed to the flue gas duct work and injected into the flue gas stream. Residual PAC (spent) is collected with fly ash in the baghouse ash hoppers.

7.6.7.2 Types of Powdered Activated Carbon. Powdered activated carbon (PAC) for use at power plants is typically a steam-activated carbon product. The feedstock varies by manufacturer, but steam-activated carbon is not subject to spontaneous heating. Chemically activated carbon products are subject to spontaneous heating and are not typically used at power plants. The activation method should be identified and considered in the Fire Protection Design Basis Document. PAC products might or might not be combustible or explosible, and testing is recommended for the PAC products specified for the plant-specific ACI system. If the product cannot be identified and tested prior to the design of the ACI system, then the Fire Protection Design Basis Document should consider a worst-case scenario.

7.6.7.3 Storage of Powdered Activated Carbon. PAC is typically stored in outdoor silos filled pneumatically by tank truck or rail tank car. Trucks connect to fill connections at grade, and PAC is transported into the top of the silos via a blower on the truck or at the rail car unloading station. In addition to fill piping and instrumentation, there is typically a bin vent filter at the top of the silo (not typically enclosed). The skirt area of the silo below the hopper might contain fluidizing air piping, PAC day bins, piping, instrumentation, etc. Depending on the PAC test results, enclosed areas should be evaluated for the plant's combustible dust program in accordance with NFPA 654.

7.6.7.4 Effect of PAC on Fly Ash Properties. Fly ash hoppers downstream of the PAC injection point will contain spent PAC in some percentage. The percentage depends on operating conditions, whether or not the PAC is injected downstream or upstream of an electrostatic precipitator, and whether or not the unit uses other inert materials in the process such as a dry sorbent. If the PAC is determined to be combustible and/or explosible *(see 7.6.7.2)*, then the fly ash/spent PAC mixture in the collection points (e.g., baghouse hoppers) should be evaluated based on the worst-case operating conditions. This could require testing to determine if the mixture is combustible or explosible. The results should be considered in the Fire Protection Design Basis Document.

7.6.7.5 Fire Protection. Where fire detection is recommended by the Fire Protection Design Basis Document, carbon monoxide monitors should be located on the clean side of the silo bin vent filters. Upon receipt of an alarm, thermographic cameras should be used to confirm the presense of a fire in the silo. Where fire protection is recommended by the Fire Protection Design Basis Document, one of the following methods of protection should be provided:

(1) A fixed water-based (water, foam-water, water with wetting agents and/or water additives) system that is designed to protect a full silo. However, admitting water into a full PAC silo will create a sludge that is not likely to flow out of a drain connection. The silo design should accommodate removal of this sludge after a fire is suppressed. Structural design should accommodate the added weight of the water. The system could utilize a fixed water supply or be supplied via manual connections located remote from the silos. The silo should be equipped with access platforms for maintenance of nozzles.
(2) A fixed water-based (water, foam-water, water with wetting agents and/or water additives) system that is designed to wash down a nearly empty silo. In this case, the silo design should accommodate removal of the PAC prior to activation of the wash down system. The wash down nozzles could be minimized (e.g., at the top only) to minimize the number of penetrations in the silo. This method minimizes the amount of sludge created by putting water on the PAC.
(3) Low-pressure carbon dioxide (CO_2) can be used to inert the silo. This can be a fixed system with a low-pressure CO_2 storage tank, vaporizer, and distribution piping. The silo manufacturer should be consulted during design of the system to confirm that the silo design pressure is high enough for a CO_2 discharge, and to confirm how many nozzle locations are required to ensure that the CO_2 can permeate the dense PAC in the silo. As an alternate to the fixed low-pressure CO_2 storage tank, the system could utilize a dry-header and fixed vaporizer with connections for a CO_2 tank truck. The silo should be equipped with access platforms for maintenance of nozzles.
(4) Other approved means.

7.6.8 Stacks.

7.6.8.1 Noncombustible liners should be used where practical. *(See Annex C for fire tests.)*

7.6.8.2 Combustibles should not be stored in the stack unless the liner is adequately protected by a fire barrier. The barrier could be either a 2-hour fire barrier or a 1-hour fire barrier if automatic sprinkler protection is provided over the combustible material.

7.6.8.3 A fire protection system should be provided for maintenance operations inside combustible stack liners. A fixed protection system installed on scaffolding is recommended. It should be capable of both manual and automatic operation and designed to protect the work platform and twice the area that can be reached by workers on the platform.

7.6.8.4 Ignition sources should be eliminated when work is being performed on combustible liners.

7.6.8.5 Noncombustible scaffolding should be considered for work on combustible plastic liners.

7.7 Turbine-Generator.

7.7.1 Hydrogen System.

7.7.1.1 General.

7.7.1.1.1 For hydrogen storage systems, see NFPA 55.

Copyright 2015 National Fire Protection Association (NFPA). Licensed, by agreement, for individual use and download on June 24, 2015 to LEADER AND READER for designated user PATTARAPORN SRITRAKOOL. No other reproduction or transmission in any form permitted without written permission of NFPA. For inquires or to report unauthorized use, contact licensing@nfpa.org.

7.7.1.1.2 Bulk hydrogen systems supplying one or more generators should have automatic valves located at the supply and operable either by "dead man" type controls at the generator fill point(s) or operable from the control room. This would minimize the potential for a major discharge of hydrogen in the event of a leak from piping inside the plant. Alternatively, vented guard piping can be used in the building to protect runs of hydrogen piping.

7.7.1.1.3 Routing of hydrogen piping should avoid hazardous areas and areas containing critical equipment.

7.7.1.1.4 Hydrogen cylinders and generator hydrogen fill and purge manifold should be located remote from the turbine generator.

7.7.1.1.5 For electrical equipment in the vicinity of the hydrogen handling equipment, see Article 500 of *NFPA 70* and Section 127 of ANSI C2, *National Electrical Safety Code*.

7.7.1.2 Hydrogen Seal Oil Pumps.

7.7.1.2.1 Redundant hydrogen seal oil pumps with separate power supplies should be provided for adequate reliability of seal oil supply.

7.7.1.2.2 Where feasible, electrical circuits to redundant pumps should be run in buried conduit or provided with fire-retardant coating if exposed in the area of the turbine generator to minimize possibility of loss of both pumps as a result of a turbine generator fire.

7.7.1.3 Curbing or drainage or both should be provided for the hydrogen seal oil unit in accordance with Section 5.5.

7.7.1.4 A flanged spool piece or equivalent arrangement should be provided to facilitate the separation of hydrogen supply where the generator is opened for maintenance.

7.7.1.5 For electrical equipment in the vicinity of the hydrogen handling equipment, including detraining equipment, seal oil pumps, valves, and so forth, see Article 500 of *NFPA 70* and Section 127 of ANSI C2, *National Electrical Safety Code*.

7.7.1.6 Control room alarms should be provided to indicate abnormal gas pressure, temperature, and percentage of hydrogen in the generator.

7.7.1.7 Hydrogen lines should not be piped into the control room.

7.7.1.8 The generator hydrogen dump valve and hydrogen detraining equipment should be arranged to vent directly to a safe outside location. The dump valve should be remotely operable from the control room or an area accessible during a machine fire.

7.7.2 Hydraulic Control System.

7.7.2.1 The hydraulic control system should use a listed fire-resistant fluid.

7.7.2.2 If a listed fire-resistant fluid is not used, hydraulic control equipment should be protected as described in 7.7.4.

7.7.2.3 Fire extinguishing systems, where required for hydraulic control equipment, should include reservoirs and stop, intercept, and reheat valves.

7.7.3 Lubricating Oil Systems.

7.7.3.1 Use of a listed fire resistant (i.e., less hazardous or less flammable) lubricating oil should be considered.

7.7.3.2 Lubricating oil storage, pumping facilities, and associated piping should comply with NFPA 30.

7.7.3.3 Turbine lubricating oil reservoirs should be provided with a vapor extractor, vented to a safe outside location.

7.7.3.4 Curbing or drainage or both should be provided for the turbine lubricating oil reservoir in accordance with Section 5.5.

7.7.3.5 All oil piping serving the turbine-generator should be designed and installed to minimize the possibility of an oil fire in the event of severe turbine vibration. *(See NFPA 30.)*

7.7.3.6* Piping design and installation should consider the following protective measures:

(1) Welded construction
(2) Guard pipe construction with the pressure feed line located inside the return line or in a separate shield pipe drained to the oil reservoir and sized to handle the flow from all oil pumps operating at the same time
(3) Route oil piping clear of or below steam piping or metal parts
(4) Insulation with impervious lagging for steam piping or hot metal parts under or near oil piping or turbine bearing points
(5) Noncombustible coverings (flange guards) around the flange to reduce the possibility of oil spraying onto a hot surface

7.7.3.7 Remote operation from the control room of the condenser vacuum break valve and shutdown of the lubricating oil pumps should be provided. Breaking the condenser vacuum markedly reduces the rundown time for the machine and thus limits oil discharge in the event of a leak. See the discussion in 17.4.6.1 on fire emergency planning involving turbine lubricating oil fires.

7.7.3.8 Cable for operation of lube oil pumps should be protected from fire exposure. Protection can consist of separation of cable for ac and dc oil pumps or 1-hour fire resistive coating (derating of cable should be considered).

7.7.4 Fire Protection.

7.7.4.1 Turbine-Generator Area.

7.7.4.1.1* All areas beneath the turbine-generator operating floor that are subject to oil flow, oil spray, or oil accumulation should be protected by an automatic sprinkler or foam-water sprinkler system. This coverage normally includes all areas beneath the operating floor in the turbine building. The sprinkler system beneath the turbine-generator should take into consideration obstructions from structural members and piping and should be designed to a density of 0.30 gpm/ft^2 (12.2 mm/min) over a minimum application of 5000 ft^2 (464 m^2).

7.7.4.1.2 Lubricating oil lines above the turbine operating floor should be protected with an automatic sprinkler system covering those areas subject to oil accumulation including the area within the turbine lagging (skirt). The automatic sprinkler system should be designed to a density of 0.30 gpm/ft^2 (12.2 mm/min).

7.7.4.1.3* Lubricating oil reservoirs and handling equipment should be protected in accordance with 7.7.4.1.1. If the lubricating oil equipment is in a separate room enclosure, protection can be provided by a total flooding gaseous extinguishing system.

Copyright 2015 National Fire Protection Association (NFPA). Licensed, by agreement, for individual use and download on June 24, 2015 to LEADER AND READER for designated user PATTARAPORN SRITRAKOOL. No other reproduction or transmission in any form permitted without written permission of NFPA. For inquires or to report unauthorized use, contact licensing@nfpa.org.

7.7.4.1.4* Protection for pedestal-mounted turbine generators with no operating floor can be provided by recommendations 7.7.4.1 through 7.7.4.3 and by containing and drainage of oil spills and providing local automatic protection systems for the containment areas. In this type of layout, spray fires from lube oil and hydrogen seal oil conditioning equipment and from control oil systems using mineral oil, if released, could expose building steel or critical generating equipment. Additional protection such as enclosing the hazard, installing a noncombustible barrier between the hazard and critical equipment, or use of a water spray system over the hazard should be considered.

7.7.4.1.5* Foam-water sprinkler systems installed in place of automatic sprinklers described in Chapter 7 should be designed in accordance with NFPA 16, including the design densities specified in Chapter 7.

7.7.4.1.6 Electrical equipment in the area covered by a water or foam-water system should be of the enclosed type or otherwise protected to minimize water damage in the event of system operation.

7.7.4.2* Turbine-Generator Bearings.

7.7.4.2.1* Turbine-generator bearings should be protected with an automatic closed-head sprinkler system utilizing directional nozzles. Automatic actuation is more reliable than manual action. Fire protection systems for turbine-generator bearings should be designed for a density of 0.25 gpm/ft^2 (10.2 mm/min) over the protected area of all bearings.

7.7.4.2.2* Accidental water discharge on bearing points and hot turbine parts should be considered. If necessary, these areas can be permitted to be protected by shields and encasing insulation with metal covers.

7.7.4.3 Exciter. The area inside a directly connected exciter housing should be protected with a total flooding automatic carbon dioxide system.

7.7.4.4 Hydrogen Seal Oil. Hydrogen seal oil units should be protected in accordance with 7.7.4.1.

7.7.4.5 Oil Storage Areas. Clean or dirty oil storage areas should be protected based on the Fire Protection Design Basis Document. This area generally represents the largest concentrated oil storage in the plant. The designer should consider, as a minimum, the installation of fixed automatic fire protection systems and the separation, ventilation, and drainage requirements in Chapter 5.

7.7.4.6* The use of a listed fire-resistant fluid as a turbine-generator lubricating oil *(see 7.7.3.1)* could eliminate the need for fire protection beneath the operating floor, at lubricating oil lines, lubricating oil reservoir, and turbine-generator bearings to mitigate the hazard posed solely by pool and three-dimensional fires involving lubrication oil. Protection against pool and three-dimensional fires in accordance with 7.7.4.1 should be installed if the hydrogen seal oil system does not use listed fire-resistant fluids. Generator bearings for seal oil systems not using listed fire-resistant fluids should be protected in accordance with 7.7.4.2. Stakeholders should be involved in the decisionmaking process before eliminating fire protection for the turbine lubrication oil hazard.

7.8 Electrical Equipment.

7.8.1 Control, Computer, and Communication Rooms.

7.8.1.1 Control, computer, or telecommunications rooms should meet the applicable requirements of NFPA 75.

7.8.1.2 A smoke detection system should be installed throughout these rooms, including walk-in-type consoles, above suspended ceilings where combustibles are installed, and below raised floors. Where the only combustibles above the false ceiling are cables in conduit and the space is not used as a return air plenum, smoke detectors are permitted to be omitted from this area.

7.8.1.3 Automatic sprinkler protection or automatic water mist fire protection systems for computer or telecommunications rooms should be considered in the Fire Protection Design Basis Document. A preaction system can be used. In addition, total flooding gaseous fire extinguishing systems should be considered for areas above and below raised floors that contain cables or for areas or enclosures containing equipment that is of high value or is critical to power generation. Individual equipment and cabinet protection could be considered in lieu of total flooding systems.

7.8.1.4 Cable raceways not terminating in the control room should not be routed through the control room.

7.8.1.5* Fire detection systems should alarm in a constantly attended area.

7.8.2 Cable Spreading Room and Cable Tunnels.

7.8.2.1 Cable spreading rooms and cable tunnels should be protected with automatic sprinkler, water spray, water mist, or automatic gaseous extinguishing systems. Automatic sprinkler systems should be designed for a density of 0.30 gpm/ft^2 (12.2 mm/min) over 2500 ft^2 (232 m^2) or the most remote 100 linear ft (30 m) of cable tunnels up to 2500 ft^2 (232 m^2).

7.8.2.2 Cable spreading rooms and cable tunnels should be provided with an early warning fire detection system.

7.8.3 Grouped Electrical Cables.

7.8.3.1 Consideration should be given to the use of fire-retardant cable insulation such as those passing the flame propagation test in IEEE-1202, *Standard for Flame-Propagation Testing of Wire and Cable*. Grouped electrical cables should be routed away from exposure hazards or protected as required by the Fire Protection Design Basis Document. In particular, care should be taken to avoid routing cable trays near sources of ignition or flammable and combustible liquids. Where such routing is unavoidable, cable trays should be designed and arranged to prevent the spread of fire.

7.8.3.2 Cable trays subject to accumulation of coal dust and the spread of an oil spill should be covered by sheet metal. Where potential oil leakage is a problem, solid-bottom trays should be avoided. Changes in elevation can prevent oil travel along cables in a tray.

7.8.3.3 The Fire Protection Design Basis Document should consider the provision of fire suppression systems or fire-retardant cable coatings or both for protection of cable concentrations from exposure fires. Care should be exercised in the selection of fire-retardant coatings to ensure that derating of the cable is considered. Consideration also should be given to the ability to add or remove cables and to make repairs to cables protected with fire-retardant coatings.

7.8.4 Switchgear and Relay Rooms. Switchgear rooms and relay rooms should be provided with smoke detection systems.

7.8.5* Battery Rooms. Battery rooms should be provided with ventilation to limit the concentration of hydrogen to 1 percent by volume. For further information refer to ANSI/IEEE

Copyright 2015 National Fire Protection Association (NFPA). Licensed, by agreement, for individual use and download on June 24, 2015 to LEADER AND READER for designated user PATTARAPORN SRITRAKOOL. No other reproduction or transmission in any form permitted without written permission of NFPA. For inquires or to report unauthorized use, contact licensing@nfpa.org.

484, *Recommended Practice for Installation Design and Installation of Large Lead Storage Batteries for Generating Stations and Substations.*

7.8.6* Transformers. Oil-filled main, station service, and startup transformers not meeting the separation or fire barrier recommendations in 5.1.4 or as determined by the Fire Protection Design Basis Document should be protected with automatic water spray or foam-water spray systems.

7.8.7* Substations and Switchyards. Substations and switchyards located at the generating facility and utilizing combustible oil–filled equipment should be protected by the yard fire hydrant system where practical. Spatial separation of transformers and other equipment containing over 500 gal (1893 L) of oil should be in accordance with 5.1.4. Consideration should be given to water spray protection of transformers critical to the transmission of the generated power.

7.9 Auxiliary Equipment and Other Structures.

7.9.1 Emergency Generators.

7.9.1.1 The installation and operation of emergency generators should be in accordance with NFPA 37.

7.9.1.2 Fire Protection.

7.9.1.2.1 Emergency generators located within main plant structures should be protected in accordance with NFPA 37.

7.9.1.2.2 Where gaseous suppression systems are used on combustion engines that can be required to operate during the system discharges, consideration should be given to the supply of engine combustion air and outside air for equipment cooling.

7.9.2 Storage Rooms, Offices, and Shops. Automatic sprinklers should be provided for storage rooms, offices, and shops containing combustible materials that present an exposure to surrounding areas that are critical to plant operations. *(For oil storage rooms, see 7.7.4.5.)*

7.9.3 Warehouses. Automatic sprinklers should be provided for warehouses that contain high-value equipment and combustible materials that are critical to power generation or that constitute a fire exposure to other important buildings.

7.9.4 Fire Pumps. Rooms housing diesel-driven fire pumps should be protected in accordance with NFPA 20.

7.9.5 Cooling Towers. Cooling towers of combustible construction that are essential to continued plant operations should be protected by automatic sprinkler or water spray systems in accordance with NFPA 214.

7.9.6 Auxiliary Boilers.

7.9.6.1 Auxiliary boiler-furnaces, their fuel burning systems, combustion products removal systems, and related control equipment should be designed, installed, and operated in accordance with Section 7.5.

7.9.6.2 Oil-fueled auxiliary boilers installed within main plant structures should be protected by automatic sprinkler, water spray, foam-water sprinkler systems, or compressed air foam systems. A sprinkler system is preferred throughout the auxiliary boiler room on a 0.25 gpm/ft^2 (10.2 mm/min) density. As a minimum, sprinkler or water spray protection should be provided as outlined in 7.5.1. Compressed air foam systems should be designed and installed in accordance with NFPA 11 and their listing for the specific hazards and protection objectives specified in the listing.

7.9.7 Vehicle repair facilities should meet the requirements of NFPA 30A.

7.9.8 The storage and piping systems of fuels in the gaseous or liquefied state should comply with NFPA 31, NFPA 54, NFPA 58, and NFPA 85 as applicable.

Chapter 8 Identification and Protection of Hazards for Combustion Turbines and Internal Combustion Engines

8.1 General.

8.1.1 Chapter 8 identifies fire and explosion hazards of combustion turbine (CT) and internal combustion engine (ICE) electric generating units and specifies recommended protection criteria.

8.1.2 It should be recognized that some CT generating facilities consist of manufactured modules wherein construction consists of siting these modules, providing fuel supply, essential services, and interconnections to the electric system, while other facilities consist of buildings specifically designed and built or modified for the CT generator and its auxiliaries. Therefore, some recommendations might be more suitable for one type of plant than another.

8.1.3* Modern ICE generating equipment is typically provided as a complete package requiring only a fuel source and electrical connections to the system to be powered. The installations should be either fixed/permanent or installed as a portable/temporary power source. The recommendations of this chapter should be applied to fixed nonresidential installations only.

8.2 Application of Chapters 4 through 7, 15, and 16. The recommendations contained in Chapters 4 through 7, 16, and 17 can apply to combustion turbine electric generating units. The Fire Protection Design Basis Document will determine which recommendations apply to any specific CT and ICE electric generating units. This determination is done by evaluating the specific hazards that exist in the facility and evaluating the level of acceptable risk for the facility. For large CT units or combined cycle plants, it is expected that most of the recommendations will apply, but for individually packaged CT and ICE units, many of the recommendations will not apply since the hazards described might not exist (e.g., small units might not have a cable spreading room or a warehouse).

8.3 General Design and Equipment Arrangement.

8.3.1 Adequate separation should be provided, in accordance with the Fire Protection Design Basis Document, between the following:

(1) Adjacent CT and ICE units
(2) Adjacent structures or exposures
(3) Adjacent properties (e.g., tank farms or natural gas facilities that could present a severe exposure)

8.3.2 Consideration should be given to equipment layout that is adjacent to CTs and ICEs and in line with planes of turbine and compressor disks that have a higher potential for damage from flying debris.

Copyright 2015 National Fire Protection Association (NFPA). Licensed, by agreement, for individual use and download on June 24, 2015 to LEADER AND READER for designated user PATTARAPORN SRITRAKOOL. No other reproduction or transmission in any form permitted without written permission of NFPA. For inquires or to report unauthorized use, contact licensing@nfpa.org.

8.3.3 Compressors and regulating stations installed on-site should be protected in accordance with the recommendations of Chapter 8.

8.4 Unattended Facilities. Facilities that are operated unattended present special fire protection concerns.

8.4.1 Consideration should be given both to the delayed response time of the fire brigade or public fire-fighting personnel (which can be several hours) and to the lack of personnel available to alert others to a fire condition.

8.4.2 The Fire Protection Design Basis Document should address delayed response and lack of communication. This analysis can establish the need to provide additional fire protection measures to prevent a major fire spread prior to the arrival of fire-fighting personnel.

8.4.3 Remote annunciation of the fire-signaling panel to one or more constantly attended locations is critical for emergency response. The fire-signaling panel should be located at the entry to the unattended plant.

8.4.4 It is important that the responding fire brigade or public fire-fighting forces be familiar with access, plant fire protection systems, emergency lighting, specific hazards, and methods of fire control. This coordinating effort should be reflected in the plant fire emergency plan. *(See Section 17.4.)*

8.4.5 If an automatic foam system is provided for the fuel storage tanks, the system should automatically shut down when the foam concentrate supply is exhausted.

8.5 Combustion Turbine and Internal Combustion Engine Generators.

8.5.1 General.

8.5.1.1 The installation and operation of CT and ICE generators should be in accordance with this chapter and NFPA 37.

8.5.1.2 Site-specific design considerations or manufacturer's typical design will govern what equipment has enclosures or how many separate enclosures will be provided for the CTs or the ICEs. The CT generator is frequently supplied as a complete power plant package with equipment mounted on skids or pads and provided with metal enclosures forming an all-weather housing. In addition to being weathertight, the enclosures are designed to provide thermal and acoustical insulation. Smaller ICE plants might involve enclosures for equipment, but more commonly engine generators are installed in a row in an open room or hall.

8.5.1.3* The fire and explosion hazards associated with CT and ICE electric generator units are as follows:

(1) Flammable and combustible fuels
(2) Hydraulic and lubricating oils
(3) Electrical and control equipment
(4) Filter media
(5) Combustible enclosure insulation
(6) Internal explosions in CTs
(7) Crankcase explosions in ICEs

8.5.1.4 In the event of a problem with older ICEs, shutdown might be difficult. Several different methods, operating independently, should be provided. These methods can include centrifugally tripped (overspeed condition) spring-operated fuel rack closure, governor fuel rack closure, electropneumatic fuel rack closure, or air inlet guillotine–type air shutoff.

8.5.2 Prevention of Internal Explosions in Combustion Turbines.

8.5.2.1* Combustion turbines should have a proof-of-flame detection system in the combustion section to detect flameout during operation or ignition failure during startup. In the case of flameout, the fuel should be rapidly shut off. If ignition is not achieved within a normal startup time, then the control system should abort the startup and close the fuel valves.

8.5.2.2 Two safety shutoff valves in series on the main fuel line should be used to minimize the likelihood of fuel leaking into the engine. On gas systems an automatic vent to the outside atmosphere should be provided between the two valves.

8.5.3 Prevention of External Fires.

8.5.3.1 Piping systems supplying flammable and combustible liquids and gases should be designed to minimize oil and fuel piping failures as follows:

(1) If rigid metal piping is used, it should be designed with freedom to deflect with the unit, in any direction. This recommendation also should apply to hydraulic lines that are connected to accessory gearboxes or actuators mounted directly on the unit. Properly designed metallic hose is an alternative for fuel, hydraulic, and lube oil lines in high vibration areas, between rigid pipe supply lines and manifolds in and at the points of entry at the engine interface.
(2) Rigid piping connected directly to the unit should be supported such that failures will not occur due to the natural frequency of the piping coinciding with the rotational speed of the machine. Care should be taken in the design of pipe supports to avoid vibrations induced by other equipment that can excite its natural frequency.
(3) Welded pipe joints should be used where practical. Threaded couplings and flange bolts in fuel and oil piping should be assembled using a torque wrench and torqued to the manufacturer's requirements. Couplings should have a positive locking device to prevent unscrewing.
(4) Instrumentation tubing, piping, and gauges should be protected from accidental mechanical damage. Liquid level indicators should be listed and protected from impact.
(5) Where practical, lubricating oil lines should use guarded pipe construction with the pressure feed line located inside the return line. If this is not practical, piping sleeves and/or tubing and flange guards should be used to reduce the possibility of oil atomization with subsequent spray fires.
(6) If practical, fluid piping should not be routed above electrical equipment to preclude leaked fluid dripping on the equipment.

8.5.3.2* In many units the lubricating oil is used for both lubrication and hydraulic control. For combined systems, a listed fire-resistant fluid should be considered. If separate systems are used, the hydraulic control system should use a listed fire-resistive hydraulic fluid, and a listed fire-resistant fluid should be considered for the lubricating system.

8.5.3.3 Combustible gas detector(s) should be considered for the CT and ICE enclosures.

8.5.3.4 For recommendations regarding containment and drainage of liquids, see Section 5.5.

Copyright 2015 National Fire Protection Association (NFPA). Licensed, by agreement, for individual use and download on June 24, 2015 to LEADER AND READER for designated user PATTARAPORN SRITRAKOOL. No other reproduction or transmission in any form permitted without written permission of NFPA. For inquires or to report unauthorized use, contact licensing@nfpa.org.

8.5.3.5 In order to prevent conditions that could cause a fire while the unit is operating, control packages should include the parameter monitoring and shutdown capabilities described in Chapter 9 of NFPA 37.

8.5.4 Fire Protection for Combustion Turbines and Internal Combustion Electrical Generators.

8.5.4.1 General. Determination of the need for fire suppression for the combustion turbine engine should be based on consideration of the value of the unit, consequences of loss of the unit, and vulnerability of adjacent structures and equipment to damage.

8.5.4.2 Automatic Sprinkler and Water Spray Systems.

8.5.4.2.1 Automatic sprinkler and water spray systems, where provided, should follow the recommendations in Chapter 7 and the following criteria:

(1) If permitted by the turbine configuration, water spray nozzles provided to protect the combustion turbine power bearing housings behind the exhaust duct should be directed based on unit geometry to avoid possible water damage.
(2) Automatic sprinkler or water spray protection should be provided for exposed oil piping and areas on the floor under the unit where leaking oil can collect.
(3) Accidental water discharge on bearing points and hot turbine parts should be considered. If necessary, these areas can be protected by shields and encasing insulation with metal covers.
(4)*Depending on unit packaging arrangement, consideration should be given to closing the fuel valves automatically on water flow. This action should not be taken for ICE emergency power supply systems (e.g., hospital emergency power).
(5) Turbochargers on ICEs constitute a part of the hazard, and protection should be provided.

8.5.4.2.2 Lubricating oil reservoirs and handling equipment should be protected in accordance with 7.7.3.3 and 7.7.4.1.3. Where this equipment is located in open areas within a building, fire protection should be sprinklered in accordance with 7.7.4.1.1. Where lubricating oil reservoirs and handling equipment are installed outside, individual coverage is appropriate.

8.5.4.3* Total Flooding Gaseous Systems.

8.5.4.3.1 Where total flooding gaseous agent systems are used, the system should be listed and installed in accordance with NFPA 12, NFPA 12A, or NFPA 2001, and the manufacturer's installation procedures.

8.5.4.3.2 Where total flooding gaseous systems are used, the engine enclosure should be arranged for minimum leakage by automatic shutdown of fans and automatic closing of doors, ventilation dampers, and other openings. CT or ICE compartments are designed to be capable of nominally airtight closure. During operation there is, however, a need for substantial amounts of secondary cooling (compartment ventilation) air. This air can be moved through the compartments by fans or venturi action from the CT or ICE air. This air flow will not stop immediately upon shutdown, and, therefore, it should be considered in the extinguishing system design.

8.5.4.3.3* Gas design concentrations should be held as long as the hazards of hot metal surfaces above the autoignition temperature and uncontrolled combustible liquid flow exist. The length of time the hazard exists is a function of the rundown and cool down times of the turbine. It is expected that the manufacturers will assess and provide the rundown and cool down times of their units.

8.5.4.3.4 Fire system operation should be arranged to close the fuel valves except for ICE emergency power supply systems (e.g., hospital emergency power).

8.5.4.3.5 Maintenance of total flooding systems is particularly critical. The integrity of the enclosure to be flooded and the interlocks between the fire system and associated equipment, such as the ventilation system dampers, should be maintained. The enclosure's integrity should be verified whenever it has been disassembled or modified. This can be done by a door fan test or other quantified means of detecting leakage. The leakage test should be conducted at least every 5 years. Maintenance and testing of the fire protection system should be conducted as defined in the applicable suppression standard.

8.5.4.3.6 It should be noted that deep-seated fires, such as oil-soaked insulation, can be present and will require manual extinguishment after the gaseous system soak time.

8.5.4.3.7 For CTs and ICEs located indoors, provisions should be addressed for safely removing the gas and potential toxic combustion by-products from the turbine enclosure following system actuation.

8.5.4.4 Total Flooding Water Mist Systems.

8.5.4.4.1 Where total flooding water mist systems are used, the system should be installed in accordance with NFPA 750 and should be listed for the application. The system should be installed in accordance with the manufacturer's installation procedures.

8.5.4.4.2 The turbine or engine enclosure should be arranged for reduced leakage by automatic closing of the doors, ventilation dampers, and automatic shutdown of fans and other openings. Fuel valves should be arranged to close automatically on system actuation.

8.5.4.4.3 The water (and air) supply should be sized to be capable of providing protection for as long as the hazards of hot metal surfaces above the autoignition temperature and uncontrolled combustible liquid flow exist (consult manufacturer for cooldown times). This requirement can be met by cycling the mist discharge provided this is included in the listing and has shown to be effective in fire tests.

8.5.4.4.4 The system should be functionally tested at the completion of commissioning activities and any time major maintenance is conducted on the system, to verify system integrity and flow of the nozzles.

8.5.4.5 Localized Extinguishing Systems.

8.5.4.5.1 Where units are not enclosed and a first level of protection is desired that will operate before sprinklers, or where sprinklers are not installed, a localized extinguishing system might be appropriate. Such a system should be of a listed local application type such as water mist, compressed air foam, carbon dioxide, or dry chemical.

8.5.4.5.2 Discharge rates and duration of discharge should be such that cooling and shutdown occur to prevent reignition of the fire. System operation should be arranged to close fuel valves.

8.5.4.5.3 The positioning of local application nozzles should be such that maintenance access to the turbine or engine is not obstructed.

Copyright 2015 National Fire Protection Association (NFPA). Licensed, by agreement, for individual use and download on June 24, 2015 to LEADER AND READER for designated user PATTARAPORN SRITRAKOOL. No other reproduction or transmission in any form permitted without written permission of NFPA. For inquires or to report unauthorized use, contact licensing@nfpa.org.

8.5.4.6 High-Expansion Foam Systems. Where total flooding high-expansion foam systems are used for the CT or ICE enclosure, fire protection system operation should be arranged to close the fuel valves.

8.5.4.7 Compressed Air Foam Systems. Where provided, compressed air foam systems should be installed in accordance with the requirements of NFPA 11.

8.5.4.8 Fixed Aerosol Fire Extinguishing Systems. Where provided, fixed aerosol fire extinguishing systems should be installed in accordance with the requirements of NFPA 2010.

8.5.5 Inlet Air System.

8.5.5.1* Air filters and evaporative cooling media should be constructed from less flammable materials whenever practical. ANSI/UL 900, *Standard for Safety Test Performance of Air Filters,* can be used as guidance.

8.5.5.2 Manual fire-fighting equipment should be available to personnel performing maintenance on air filters.

8.5.5.3 Access doors or hatches should be provided for manual fire fighting on large air filter structures.

8.5.6 Generators.

8.5.6.1 Hydrogen systems should comply with recommendations in 7.7.1 and 7.7.4.4.

8.5.6.2 Fire protection should be provided in accordance with 8.5.4 for generator bearings and oil piping or any area where oil can flow, accumulate, or spray.

8.5.6.3* Air-cooled generators should be tightly sealed against the ingress of moisture in the event of discharge (accidental or otherwise) of a water spray system. Sealing should be positive, such as by a gasket or grouting, all around the generator housing.

8.5.7 Starting Equipment for CTs. Where ICEs or torque converters are used, fire protection should be provided based on consideration of the factors in 8.5.4.1.

8.6 Electrical Equipment.

8.6.1 Control Enclosures. Control enclosures contain control panels, switchgear, batteries, relays, and indication gauges. Auxiliary electrical equipment enclosures, where provided, normally contain static excitation equipment, switchgear, current transformers, potential transformers, grounding transformers, and other electrical equipment.

8.6.2 A smoke detection system should be installed with alarm annunciation to a constantly attended location.

8.6.3 An automatic suppression system should be considered for the enclosures.

8.7 Combined Cycle Units.

8.7.1 Heat Recovery Steam Generators. Heat recovery steam generators using supplemental firing should be designed and protected in accordance with Section 7.5. *(See NFPA 85 for additional requirements.)*

8.7.2 Steam Turbines. Steam turbines, generators, and their associated hazards should be designed and protected in accordance with Section 7.7.

Chapter 9 Alternative Fuels

9.1 General. Chapter 9 identifies fire and explosion hazards of alternative fuel [e.g., refuse derived fuel (RDF), municipal solid waste (MSW), biomass]–fired electric generating plants and specifies recommended protection criteria that are common to all plants regardless of the fuel used.

9.1.1 The major fire and explosion hazards associated with mass burn units are as follows:

(1) Sourcing, receipt, handling, and storage of large quantities of alternative fuels.
(2) Unsuitable waste entering the facility. Examples include certain hydrocarbons, flammable liquids, metal dusts, acetylene, and explosives.
(3) Hydraulic and lubricating oils associated with the processing equipment.
(4) Improperly maintained electrical equipment.
(5) Large amounts of fuel accumulating in unsuitable areas as a result of spillage or handling.
(6) Inadequate dust control.

9.1.2 Plant Arrangement.

9.1.2.1 Specific hot-load unloading areas should be designated and separated from other areas (preferably outdoors) so that loads containing smoldering or other suspect constituents can be segregated. Such areas should be properly monitored and equipped to promptly extinguish incipient fires before recombining with other MSW and RDF.

9.1.2.2 Smoke or heat vents should be considered in accordance with 5.4.1 in areas such as the tipping/receiving floor, or in fuel storage areas.

9.1.2.3 There is an inherent dust potential associated with the processing of most alternative fuels. The process should be designed to minimize the production of dust. Dust collected in a dust collection system, baghouse, or cyclone should be discharged downstream of the collection system, back to the conveying system, or back to the residue or waste stream. *(For additional guidance, see 7.4.3.)*

9.1.3 Boiler Feed Equipment.

9.1.3.1 The boiler feed equipment, such as a metering bin, should be of noncombustible material and designed to minimize pockets or corners that would cause combustible material to build up. Video monitoring should be considered for locations not readily visible to plant staff. *(Refer to* NFPA 85.*)*

9.1.3.2* Access hatches should be provided to allow operating personnel to break up accumulations of combustible material or plugages. In addition, the hatches should be placed so that the stream from a fire hose can be directed onto a fire that can occur inside the equipment.

9.1.4 Prevention of Fires and Explosions.

9.1.4.1 The facility personnel should ensure that fuel is continuously moved to the processing or storage areas. Vehicles loaded with fuel materials should not be parked in the building during idle periods.

9.1.4.2 A communication system should be provided between the floor manager and the control room to expedite assistance in the event of fire.

9.1.4.3 A regular program of housekeeping should be established to keep concentrations of combustible material and combustible dust to a minimum. Poor housekeeping increases fire frequency and results in larger fires.

9.1.4.4 Operational experience has demonstrated that roving operators and other plant personnel have been key factors

Copyright 2015 National Fire Protection Association (NFPA). Licensed, by agreement, for individual use and download on June 24, 2015 to LEADER AND READER for designated user PATTARAPORN SRITRAKOOL. No other reproduction or transmission in any form permitted without written permission of NFPA. For inquires or to report unauthorized use, contact licensing@nfpa.org.

in detection of fires and unsafe conditions. It is important that they be properly trained to observe and react to incipient fire situations. These should be reported to the control room operator for evaluation to determine what action is to be taken.

9.1.5 Fire Protection.

9.1.5.1* Hose stations designed in accordance with NFPA 14 should be located throughout fuel materials storage (tipping building), charging floor, firing floor, hydraulic area, and residue building. Due to the high frequency of use, the following points should be considered:

(1) Location and physical protection so as to avoid potential damage due to traffic patterns
(2) Size and number to be determined for unique plant geometry (e.g., push walls)
(3) Ease of use, maintenance, and storage, such as through the use of continuous-flow, noncollapsible hose reels
(4) Protection from freezing in unheated areas

9.1.5.2* Fuel handling structures and conveyors should be protected in accordance with 7.4.6.

9.1.5.3 Hydraulic equipment, reservoirs, coolers, and associated oil-filled equipment should be provided with automatic sprinkler, water spray protection, or compressed air foam systems. Protection should be over oil-containing equipment and for 20 ft (6.1 m) beyond in all directions. A density of 0.25 gpm/ft^2 (10.2 mm/min) should be provided. Compressed air foam systems should be designed and installed in accordance with NFPA 11 and their listing for the specific hazards and protection objectives specified in the listing.

Exception: Where a listed fire-resistant fluid is used, protection is not needed.

9.1.5.4 Based on the combustible loading, location, and essential use, an automatic sprinkler system should be considered for dust collectors, baghouses, and cyclone type separators. *(Refer to 7.4.6.5.)*

9.1.5.5* Automatic sprinkler protection should be provided in plastic ducts over 12 in. (300 mm) in diameter whether ducts are located inside or outside the tipping building. Sprinklers should be spaced not more than 12 ft (3.7 m) apart in horizontal ducts and no more than 24 ft (7.32 m) apart in vertical ducts. Water supply should be adequate for a flow rate of 20 gpm (1.26 L/sec) per head.

9.1.5.6 Automatic sprinklers should be corrosion resistant to withstand corrosion from products of combustion from combustion engine–driven front end loaders and from trash trucks.

9.2 Application of Chapters 4 through 7, 16, and 17. The recommendations contained in Chapters 4 through 7, 16, and 17 can apply to alternative fuel–fired electric generating station units. The Fire Protection Design Basis Document will determine which recommendations apply to any specific alternative fuel–fired unit. This is done by evaluating the specific hazards that exist in the facility and determining the level of acceptable risk for the facility. It is expected that most of the recommendations will apply to all units, except as follows:

(1) Where size and specific design eliminate certain hazards (e.g., H_2 seal oil units, cable spreading rooms, or warehouses)
(2) Where the Fire Protection Design Basis Document indicates a single source of water (e.g., a single tank) is considered adequate and reliable

9.3 Mass Burn Fuels.

9.3.1 General. Section 9.3 identifies fire and explosion hazards that are unique to the use of MSW as a boiler fuel by means of a process that includes the hauling of MSW directly to a tipping floor or storage pit and burning without any special processing. MSW is municipal solid waste consisting of commonly occurring residential and light commercial waste.

9.3.2 Plant Arrangement.

9.3.2.1 The refuse pit is normally enclosed on three sides, up to the charging level, by reinforced concrete walls. The thickness of the walls vary with facility design, but should provide a minimum of 2-hour fire separation.

9.3.2.2 Exposed steel columns located at the front of the refuse pit should be protected against structural damage caused by heat (fire). This protection could include concrete encasement, water spray, or other suitable alternatives and should extend from the base of the column to the roof of the refuse pit enclosure. Care should be taken to protect fireproofing from mechanical damage.

9.3.2.3 Overhead cranes are often used to mix and stock the refuse within the pit. Undesirable waste (large items such as refrigerators) is often separated from the waste stock by the crane operator for offsite disposal or for shredding/processing *(see 9.4.5)* prior to replacement into the waste stock. All other items are loaded directly into boiler feed hoppers without processing. In addition, the acceptable method for extinguishment of small fires is also direct loading of the smoldering refuse into the hoppers by the crane operator. The following considerations should be given with respect to the crane operator's pulpit:

(1) Locating the pulpit such that operator safety is not compromised
(2) Ability to have a clear and unobstructed view of all storage and charging areas
(3) Providing self-contained breathing apparatus for operator egress
(4) Providing direct communication with the boiler control room and floor manager
(5) Ability to activate fire protection equipment

9.3.2.4 Mass burn facilities utilizing hammermills and flailmills should refer to the criteria in 9.4.2.2.

9.3.3 Fire Protection.

9.3.3.1* The tipping/receiving building should be provided with automatic sprinkler protection throughout. Systems should be designed for a minimum of 0.25 gpm/ft^2 (10.2 mm/min) over the most remote 3000 ft^2 (279 m^2) (increase by 30 percent for dry pipe systems) of floor area with the protection area per sprinkler not to exceed 130 ft^2 (12 m^2). High-temperature sprinklers [250°F to 300°F (121°C to 149°C)] should be used. If the tipping/receiving floor is to be used as the charging storage area, additional protection should be provided in accordance with 9.3.3.2.2 .

9.3.3.2* The MSW Storage Pit, Charging Floor, and Grapple Laydown Areas.

9.3.3.2.1 Automatic sprinkler protection should be provided throughout the refuse enclosure to protect the entire roof

Copyright 2015 National Fire Protection Association (NFPA). Licensed, by agreement, for individual use and download on June 24, 2015 to LEADER AND READER for designated user PATTARAPORN SRITRAKOOL. No other reproduction or transmission in any form permitted without written permission of NFPA. For inquires or to report unauthorized use, contact licensing@nfpa.org.

area against structural damage. Systems should be designed for a minimum of 0.20 gpm/ft^2 (8.1 mm/min) over the most remote 3000 ft^2 (279 m^2) (increase by 30 percent for dry pipe systems) of pit/floor area with the protection area per sprinkler not to exceed 100 ft^2 (9.3 m^2). High-temperature sprinklers [250°F to 300°F (121°C to 149°C)] should be used. Exposed steel column protection, where provided, should be designed in accordance with NFPA 15 and can be connected to the overhead sprinkler system. Due to the distance between the bottom of the refuse pit and the sprinkler system, manual hoses and monitor nozzles should be considered as the primary means of fighting a MSW storage pit fire.

9.3.3.2.2 In addition to sprinkler protection, the storage pit should be provided with monitor nozzle protection designed to furnish a minimum of 250 gpm (946 L/min) at 100 psi (689 kPa) at the tip. Monitors should be located so as to allow for coverage of all pit areas with at least two streams operating simultaneously. Due to frequency of use and potential for operator fire exposure, oscillating monitor nozzles with manual override should be provided.

9.3.3.3 Particular care should be taken in the selection of fire detection devices in consideration of harsh and dusty environments and high air flows.

9.3.4 Explosion Suppression. Mass burn facilities utilizing hammermills and flailmills for processing of oversize bulky waste should follow the recommendations of 9.4.3.

9.4 Refuse Derived Fuels (RDF).

9.4.1 General. Section 9.4 identifies fire and explosion hazards that are unique to the processing of municipal solid waste (MSW) into refuse derived fuels (RDF). RDF is a boiler fuel manufactured by means of a process that includes storing, shredding, classifying, and conveying the waste to a fuel storage area. It is then conveyed to the boiler through a metering device.

9.4.2 Plant Arrangement.

9.4.2.1 Fire areas should be separated from each other by approved means. In addition to the applicable requirements of 5.1.1.2 and 5.1.1.3, it is recommended that, as a minimum, fire area boundaries be provided to separate the following:

(1) The tipping floor (including the MSW storage)
(2) The processing area
(3) RDF storage

9.4.2.2 There is a potential fire and explosion hazard with the use of hammermills and flailmills and associated dust collection equipment. During the size-reduction process, flammable or explosive materials in the waste stream can be ignited.

9.4.2.2.1 The primary shredder and associated dust collectors should be located within an enclosure of damage-limiting construction. It is preferable that the enclosure be detached from the main building. Other alternatives included are the following locations:

(1) Outside of, but sharing a common wall with, the main building
(2) Inside of the main building, along an outside wall
(3) Within the main building

9.4.2.2.1.1 In view of the difficulties in preventing and controlling all types of shredder explosions, it is important to isolate the shredder and surrounding enclosure from vulnerable equipment and occupied areas in the plant. Consideration should be given to the protection of operating personnel or visitors from the potential blast zone.

9.4.2.2.2 Secondary shredders do not exhibit as significant a fire and explosion potential as primary shredders. Where specific designs do not eliminate the potential for explosions in the secondary shredder, refer to 9.4.3.

9.4.2.2.3* Shredders, shredder enclosures, and openings into the enclosure should be designed so that, by a combination of venting and wall strength, they will resist a postulated worst credible case explosion. Consideration should be given to a substantial increase in explosive pressure as a result of venting of shredders into a combustible vapor–air mixture within the enclosure. It is recommended that designers seek guidance from those having specialized experience in the analysis of such hazards, including specifying and constructing of explosion venting and shredder enclosures.

9.4.2.2.4 Platforms at intermediate elevations should be of open grating to reduce obstructions to the effective vent area.

9.4.2.2.5 Electrical equipment located inside the shredder enclosure should be rated for use in both hazardous vapor and dust atmospheres in accordance with Articles 500 and 501 of *NFPA 70*.

9.4.2.2.6 Service panels or controls for the shredder should be located so as not to expose operating personnel to the blast zone.

9.4.2.2.7 Explosion venting should be sized using the hydrogen nomographs as described in NFPA 68. Where ducts are used to vent explosions to the outside, consideration should also be given to increased pressure caused by the length of the vent duct. If the vent area available is inadequate for sufficient explosion venting because of the height of the vent stack or other factors, an explosion suppression system in the shredder should be used to augment the venting arrangement. *(Refer to 9.4.5.)*

9.4.2.2.8 Where access door assemblies are provided for primary shredder enclosure, they should be kept secured to prevent unauthorized access when the equipment is operating. The access door assemblies should have the same pressure rating as the enclosure.

9.4.3 Prevention of Fires and Explosions in RDF Units.

9.4.3.1 The process should be designed to minimize the production of dust. Dust collected in a dust collection system, baghouse, or cyclone should be discharged downstream of the collection system, back to the conveying system, or back to the residue or waste stream. *(For additional guidance, see 7.4.3.4.)*

9.4.3.2* Radiation imaging equipment (e.g., x-ray) should be considered as a means to detect tanks or containers that could contain flammable materials. The detection equipment should be arranged to monitor waste on the conveyor before it enters the shredder. An image of what is seen in the waste is transmitted to an operator. If a tank-shaped object is observed, the conveyor should be stopped and the tank removed.

9.4.3.3 A combustible gas detection system should be considered as a supplemental explosion protection measure. Anticipated flammable vapors can include a wide variety of flammable materials and selected gas detection device should take this into consideration.

9.4.3.3.1 The location of sensors or sampling lines should be based on site-specific conditions, including air flow rates through the shredder and associated components located upstream and downstream of the shredder.

Copyright 2015 National Fire Protection Association (NFPA). Licensed, by agreement, for individual use and download on June 24, 2015 to LEADER AND READER for designated user PATTARAPORN SRITRAKOOL. No other reproduction or transmission in any form permitted without written permission of NFPA. For inquires or to report unauthorized use, contact licensing@nfpa.org.

9.4.3.3.2 The combustible gas detection system should be arranged with alarm annunciation at 25 percent of the calibrated lower explosive limit (LEL) and interlocks at 50 percent of the LEL. Interlocks that should be considered include area evacuation; shutdown of shredder, associated conveyors, and dust collection systems; and operation of fire or explosion suppression systems.

9.4.4 Fire Protection.

9.4.4.1* Interlocks. The actuation of a fire suppression system should cause equipment it protects to shut down. With the shutdown of the equipment, the upstream feed conveyors should also shut down to stop feeding combustible material to the fire, while downstream conveyors should be stopped to prevent the spread of the fire. A manual override should be provided.

9.4.4.2 Classifiers/trommels, such as rotating screens, should be provided with water spray protection to prevent fire from propagating downstream through the screen. Systems should be designed for a minimum of 0.25 gpm/ft^2 (10.2 mm/min) of the entire screen area with nozzles no more than 10 ft (3.0 m) on center. Consideration should be given to avoiding physical damage from mobile equipment operation in the area and from the material being processed.

9.4.4.3* The tipping/receiving building should be provided with automatic sprinkler protection throughout. Systems should be designed for a minimum of 0.25 gpm/ft^2 (10.2 mm/min) over the most remote 3000 ft^2 (279 m^2) (increase by 30 percent for dry pipe systems) of floor area, with the protection area per sprinkler not to exceed 130 ft^2 (12.0 m^2). High temperature sprinklers [250°F to 300°F (121°C to 149°C)] should be used.

9.4.4.4* The processing building should be provided with automatic sprinkler protection throughout. Systems should be designed for a minimum of 0.25 gpm/ft^2 (10.2 mm/min) over the most remote 3000 ft^2 (279 m^2) (increase by 30 percent for dry pipe systems) of floor area, with the protection area per sprinkler not to exceed 130 ft^2 (12.0 m^2).

9.4.4.5 The RDF storage building should be provided with automatic sprinkler protection throughout. Systems should be designed for a minimum of 0.35 gpm/ft^2 (14.3 mm/min) over the most remote 3000 ft^2 (279 m^2) (increase by 30 percent for dry pipe systems) of floor area, with the protection area per sprinkler not to exceed 100 ft^2 (9.3 m^2). High-temperature sprinklers [250°F to 300°F (121°C to 149°C)] should be used. Storage heights in excess of 20 ft (6.1 m) will require higher design densities.

9.4.4.6 The RDF boiler feed system area, including bins, hoppers, chutes, conveyors, and so forth, should be considered for automatic sprinkler protection. Where provided, the systems should be designed for a minimum of 0.20 gpm/ft^2 (8.1 mm/min) over the most remote 2000 ft^2 (186 m^2) (increase by 30 percent for dry pipe systems) of floor area, with the protection area per sprinkler not to exceed 130 ft^2 (12.0 m^2). Internal, as well as external, protection also should be considered depending upon specific equipment design, ceiling heights, and accessibility for manual fire fighting.

9.4.4.7 Shredder enclosures should be provided with automatic sprinkler or water spray protection. Systems should be designed for a minimum of 0.25 gpm/ft^2 (10.2 mm/min) over the most remote 3000 ft^2 (279 m^2) (increase by 30 percent for dry pipe systems) of floor area, with the protection area per sprinkler not to exceed 100 ft^2 (9.3 m^2). Water spray protection should also be provided within the shredder housings at intake and discharge chutes and within vent shafts.

9.4.4.8 The environment should be considered in selecting detection devices. Heat detection is most reliable under conditions encountered in process areas. Smoke detection should not be used in process areas. If flame detectors are used, an air sweep of the lens should be provided.

9.4.5 Explosion Suppression.

9.4.5.1 Explosion suppression systems should be considered for protection of shredders. If such systems are selected, they should be designed and installed by qualified individuals using listed components. *(See NFPA 69 and ASTM E1248, Standard Practice for Shredder Explosion Protection.)*

9.4.5.2 Explosion suppression system detectors and agent distribution should cover the entire shredder volume and all contiguous areas, including inlet and discharge conveyors, reject chutes, and dust collection systems.

9.4.5.3* The explosion suppression system equipment and associated mountings should be inspected periodically. Extinguisher and detector ports should be cleaned frequently to ensure successful operation.

9.4.5.4 Pressure sensors should be located in areas of the shredder where they will not be plugged. If there is a delay in operation of the suppression system, there could be an increase in pressure above what would be expected in an unsuppressed explosion.

9.5 Biomass Fuels.

9.5.1 General. Section 9.5 identifies fire and explosion hazards that are unique to the processing of forest and agricultural by-products (e.g., wood chips, rice hulls, sugar cane) into boiler fuel manufactured by means of a process that can include, but is not limited to, storing, shredding, classifying, and conveying the biomass to a fuel storage area and conveying it from the storage area to feed the boiler through a metering device. In general, biomass fuels are such that fires of low to moderate intensity would be expected. There can be cases, however, where fuel type and processing will present a greater fire hazard and so require a higher level of protection.

9.5.2 Plant Arrangement.

9.5.2.1 The initial biomass receiving and storage area, whether indoors or outdoors, should be designed in accordance with the following:

(1) NFPA 1, *Fire Code*
(2) NFPA 61, *Standard for the Prevention of Fires and Dust Explosions in Agricultural and Food Processing Facilities*
(3) NFPA 80A, *Recommended Practice for Protection of Buildings from Exterior Fire Exposures*
(4) NFPA 664, *Standard for the Prevention of Fires and Explosions in Wood Processing and Woodworking Facilities*
(5) NFPA 1144, *Standard for Reducing Structure Ignition Hazards from Wildland Fire*

9.5.2.2 Where process or handling equipment involves biomass materials with particle size less than 80 mesh and with moisture content less than 30 percent by volume, a potential explosion hazard exists. *(Refer to* NFPA 68, NFPA 69, and NFPA 664.*)*

9.5.2.3 Fire areas should be separated from each other by approved fire barriers, spatial separation, or other approved

Copyright 2015 National Fire Protection Association (NFPA). Licensed, by agreement, for individual use and download on June 24, 2015 to LEADER AND READER for designated user PATTARAPORN SRITRAKOOL. No other reproduction or transmission in any form permitted without written permission of NFPA. For inquires or to report unauthorized use, contact licensing@nfpa.org.

means. In addition to the requirements of 5.1.1.3, it is recommended that, as a minimum, fire area boundaries be provided to separate the following:

(1) The receiving/storage area
(2) The processing area

9.5.2.4 For biomass facilities utilizing processes described in 9.5.2.2, refer to 9.3.2.3.

9.5.3 Prevention of Fires and Explosions in Biomass Units.

9.5.3.1 Outdoor Storage. For the prevention of fires with outdoor storage of biomass, see NFPA 1.

9.5.3.2 Indoor Storage. For biomass materials subject to spontaneous ignition, the piles should be rotated on a regular basis.

9.5.4 Fire Protection.

9.5.4.1 For the fire protection of outdoor biomass material, see NFPA 1.

9.5.4.2* Biomass storage buildings should be provided with automatic sprinklers throughout. Systems should be designed for a minimum of 0.25 gpm/ft^2 (10.2 mm/min) over the most remote 3000 ft^2 (279 m^2) (increase by 30 percent for dry pipe systems) of floor area, with the protection area per sprinkler not to exceed 130 ft^2 (12.0 m^2).

9.5.5 Explosion Protection. Biomass units utilizing equipment capable of producing explosive concentrations of gases or dusts as described in 9.5.2.2 should be provided with explosion venting or explosion suppression systems. *(For further guidance, see NFPA 68, NFPA 69, and NFPA 664.)*

9.6 Rubber Tires.

9.6.1 General.

9.6.1.1* Section 9.6 identifies fire and explosion hazards that are unique to the processing of rubber tires as a primary or secondary boiler fuel by means of a process that can include but is not limited to storing, shredding, and conveying the rubber tires to a fuel storage area (and conveying it from the storage area to fuel the boiler).

9.6.1.2 There are several inherent fire hazards associated with scrap tires, whether outside or inside a building. Once tires are ignited, the fire develops rapidly, and it is difficult to extinguish. The tires will generate a large amount of black smoke. In addition, as the tires burn they generate oil that can spread and increase the size of the fire.

9.6.2 Initial Receiving and Storage Areas.

9.6.2.1 The initial receiving and storage areas should be located outdoors. The area should be secured and cleared of all vegetation within 100 ft (30 m) of tire storage. See Section 10.16 and Chapter 34 of NFPA 1 for further guidance on pile size, separation, and access.

9.6.2.2* Where overhead cranes are used to load inside feed hoppers from inside the storage pits, the following should be considered:

(1) Locating the pulpit so that operator safety is not compromised
(2) The ability to have a clear and unobstructed view of all storage and charging areas

9.6.2.3 For tire plant processes that generate dust explosion potential, refer to NFPA 68, NFPA 69, and individuals having specialized experience.

9.6.3 Fire Protection.

9.6.3.1 For the water supply and fire protection requirements of outdoor storage of scrap rubber tires, see Chapter 33 of NFPA 1.

9.6.3.2 The scrap rubber tire pit should be provided with foam-water spray protection throughout. The system(s) should be designed for a minimum of 0.24 gpm/ft^2 (9.8 mm/min) over the entire pit area, with the protection area per nozzle not to exceed 100 ft^2 (9.3 m^2). Due to the extreme hazard, clearance between the top of storage and foam water spray systems should be minimized.

9.6.3.3* In addition to the foam water spray protection, the storage pit should be provided with monitor nozzle protection designed to furnish a minimum of 250 gpm (946 L/min) at 100 psi (689 kPa) at the tip. Monitors should be located so as to allow for coverage of all pit areas with at least two streams operating simultaneously. Due to the potential for operator fire exposure, oscillating monitor nozzles with manual override should be provided.

9.6.3.4 For protection and storage of scrap rubber tires indoors, refer to Section 34.8 of NFPA 1.

9.6.3.5 The boiler's tire feed system, including bins, hoppers, and chutes, should be considered for automatic foam-water protection. Where provided, the system should be designed for a minimum of 0.30 gpm/ft^2 (12.2 mm/min) over the most remote 2500 ft^2 (232 m^2).

9.6.3.6 All water spray systems should be capable of remote actuation from the control room or other constantly attended areas. Additionally, local actuation stations should be placed adjacent to the fire areas along lines of egress and in consideration of operator safety and protection from damage due to equipment.

9.6.3.7 Particular care should be taken in the selection of detection devices in consideration of harsh and dusty environments and high air flows.

9.6.4 Explosion Protection. Scrap rubber tire units utilizing equipment capable of producing explosive concentrations of gases or dusts should be provided with explosion venting or explosion suppression systems. *(For further guidance, see NFPA 68 and NFPA 69.)*

9.7 Other Alternative Fuels and Processes. Other alternative fuels (e.g., culm, peat, gob) are used as boiler fuels. Also, other technologies exist for the utilization and processing of alternative fuels as boiler fuels. It is recommended that designers seek guidance from those having specialized experience to understand the unique characteristics of any particular fuel or technology in order to properly apply the appropriate portions of this and other applicable documents.

Chapter 10 Identification and Protection of Hazards for Wind Turbine Generating Facilities

10.1 General.

10.1.1 Chapter 10 identifies fire and explosion hazards of wind turbine electric generating units and associated wind

Copyright 2015 National Fire Protection Association (NFPA). Licensed, by agreement, for individual use and download on June 24, 2015 to LEADER AND READER for designated user PATTARAPORN SRITRAKOOL. No other reproduction or transmission in any form permitted without written permission of NFPA. For inquires or to report unauthorized use, contact licensing@nfpa.org.

generating facilities (wind farms) and specifies recommended protection criteria.

10.1.2 Most wind farms consist of a varied number of tower-mounted wind turbine generators with electrical outputs tied together with the electrical power voltage stepped up to match grid voltage. The particular design of the wind turbine generators can vary, as will that of the configuration of the power output circuitry and components. Therefore, some recommendations might be more suitable for one type of wind turbine or wind farm facility than another. Many of the specific guidelines herein might require modification after due consideration of all local factors involved. Given the geographical remoteness of the typical wind farm, the emphasis of this guideline is on prevention of fire by design with the addition of fire suppression equipment to be guided by the Fire Protection Design Basis Document as well as a cost-benefit analysis to determine the extent to which fire protection is justified.

10.2 Application of Chapters 4 through 7 and 16 and 17. The recommendations contained in Chapters 4 through 7, 16, and 17 can apply to wind generating facilities. The Fire Protection Design Basis Document should determine which recommendations apply to any specific wind generating facility. This determination is done by evaluating the specific hazards that exist in the facility and evaluating the level of acceptable risk for the facility. For most wind generating facilities, it is expected that most of the recommendations will apply, although there could be particular wind turbines and output circuit designs for which some of the recommendations will not apply since the hazards described might not exist (e.g., no transformer in the wind turbine nacelle).

10.3 General Design and Equipment Arrangement.

10.3.1 Adequate separation should be provided between the following, as determined by the Fire Protection Design Basis Document:

(1) Adjacent wind turbine units consistent with land and wind topography constraints
(2) Adjacent structures or exposures, including transformers
(3) Adjacent properties (e.g., aboveground pipelines, tank farms, or natural gas facilities that could present a severe exposure)

10.3.2 Consideration should be given to equipment layout that is adjacent to wind turbines and in line with the planes of the rotating blades and hub in typical wind conditions that have a higher potential for damage from flying debris (such as blade sections on overspeed or ice).

10.3.3 Particular care should be practiced with respect to spatial separation and protection from wildland fires as well as the control of vegetation where wind turbines and associated equipment might be located. Guidance regarding vegetation clearance, separation distance, and emergency planning can be found in NFPA 1143 and NFPA 1144.

10.4 Unattended Facilities.

10.4.1 Most wind farms are typically located in remote areas and can be expected to be unattended for long periods of time. They are normally configured in such a manner that timely access to towers and nacelles is not usually available. This situation presents special fire protection concerns applicable to both on-shore and off-shore wind power generating facilities.

10.4.2 Consideration should be given both to the delayed response time of public fire-fighting personnel (which can be several hours) and to the lack of personnel available to alert others to a fire condition.

10.4.3 The Fire Protection Design Basis Document should address delayed response, lack of communication, and lack of access. The Fire Protection Design Basis Document should establish the need to provide additional fire protection measures to prevent a major fire spread prior to the arrival of fire-fighting personnel.

10.4.4 Remote annunciation of fire-signaling systems to one or more constantly attended locations is critical for emergency response. The location and design of fire-signaling systems and their interfaces with wind generating facility control and information systems should be considered.

10.4.5 It is important that the responding public fire-fighting forces be familiar with access to and movement around the wind generating facility site as well as with specific hazards with respect to the wind turbines and the power output scheme. This coordinating effort should be reflected in the wind farm fire emergency plan.

10.5 Wind Generating Facilities.

10.5.1 General.

10.5.1.1 The installation and operation of wind turbine generating facilities should be in accordance with standard practices of the industry, except as modified by Section 10.5.

10.5.1.2* Site-specific considerations or a manufacturer's typical layout will govern wind turbine generating facility design. This will include the wind turbine design, tower design and heights, tower foundations, power output, and load control circuitry. This will dictate how many separate structures or enclosures will be provided in addition to the wind turbine towers. The wind turbines and associated towers are commonly installed in multiple rows or long strings, depending on the land and wind topography.

10.5.1.3 In the event of a problem with a wind turbine generator, automatic shutdowns should be provided that result in stopping of shaft rotation, braking, and isolation of electrical power to the tower and nacelle. Different methods of equipment shutdown and isolation, operating independently, should be provided. These can include blade pitch control and/or hydraulic braking as well as power isolation in concert with electronic control termination.

10.5.2 Prevention of Fires in Wind Turbine Generating Facilities.

10.5.2.1 In general, the principles outlined in NFPA 30 should be applied to gearboxes and lubricating oil sumps, pumps, coolers, filters, and associated piping. As a minimum, piping systems supplying flammable and combustible liquids should be designed to minimize hydraulic and lubricating oil piping failures as follows:

(1) If rigid metal piping is used, it should be designed with freedom to deflect with the gearbox, in any direction, at the interface with the gearbox. This recommendation also should apply to hydraulic lines that are connected to accessory gearboxes or actuators mounted directly in the nacelle. Properly designed metallic hose is an alternative for hydraulic and lube oil lines in high vibration areas to allow relative motion between rigid pipe supply lines and

Copyright 2015 National Fire Protection Association (NFPA). Licensed, by agreement, for individual use and download on June 24, 2015 to LEADER AND READER for designated user PATTARAPORN SRITRAKOOL. No other reproduction or transmission in any form permitted without written permission of NFPA. For inquires or to report unauthorized use, contact licensing@nfpa.org.

manifolds, and at the points of entry at the gearbox and generator interfaces.

(2) Rigid piping connected directly to the gearbox should be supported such that failures will not occur due to the natural frequency of the piping coinciding with the rotational speed of the gearbox, drive shaft and hub, and generator. Care should be taken in the design of pipe supports to avoid vibrations induced by other equipment that can excite its natural frequency.

(3) Welded pipe joints are preferred. Threaded couplings and flange bolts in oil piping should be assembled using a torque wrench and torqued to the manufacturer's requirements. Threaded fittings should have a positive locking device to prevent unscrewing.

(4) Instrumentation tubing, piping, and gauges should be protected from accidental mechanical damage. Sight glasses should be listed.

(5) Lubricating oil lines should use "guarded" pipe construction with the pressure feed line located inside the return line. Where guarded pipe construction is not used, piping sleeves should be used to reduce the possibility of oil atomization. All mechanical connections should be guarded.

(6) Containment and drainage should be provided so as to minimize the spread of oil within the nacelle or externally, which poses a risk to equipment or personnel below.

(7) Fluid piping should be routed below all electrical equipment to preclude leaked fluid dripping on the equipment.

10.5.2.2 For wind turbine generators, the following monitors and/or trip functions should be provided to monitor the operation of wind turbine generators safely, and initiate a safe shutdown of abnormal operating conditions or parameters:

(1) Grid disturbance
(2) Yaw errors or limits
(3) Braking issues
(4) Abnormal vibration
(5) Overspeed (including wind conditions)
(6) Temperature faults
(7) Oil condition (gearbox/lubrication and hydraulic)
(8) Motor protection
(9) Loss of communication between modules or with control center
(10) Blade angles and battery status
(11) Activation of smoke and/or heat detectors within the nacelle

10.5.2.3 For gearbox lubrication, a listed fire-resistant fluid should be considered. System designs should reflect a design objective to minimize the amount of oil needed and the amount of piping and associated components outside of the gearbox.

10.5.2.4 Hydraulic control systems should use a listed fire-resistive hydraulic fluid. System designs should reflect a design objective to minimize the amount of hydraulic fluid needed and the amount of piping and associated components required.

10.5.2.5 Electrical power delivery and control systems as well as communications systems, including cabling, wiring, insulation, fans/motors, and cabinetry, should meet the applicable industry design standards for the use intended and duty cycle specified. Such standards should be applied to systems within the nacelle and tower as well as those associated with moving power from the wind turbine units to the grid. As such, this includes power cables and lines, transformers, and power conditioning systems and/or components. Electrical equipment faults are the most likely source of ignition for combustible materials. Electrical equipment should consist of listed arc resistant switchgear.

10.5.2.6 Transformers are used to step-up the electrical power generated by the generator in the nacelle. These transformers can be located in the nacelle, in the tower, or on pads near the base of the tower. The plant design should include features that address the exposures posed by such transformers and, if the transformers are not dry type or filled with a listed less-flammable fluid insulating oil, should take into account transformer location, containment of oil, spacing from other objects, including the tower, and the use of barriers and fixed protection. The same principles should be applied to the step-up transformers used to connect a wind farm to the grid. The step-up transformer installations should reflect a proper evaluation of the exposure created with respect to other transformers as well as wind farm support structures. Appropriate physical separation should be observed, or barrier walls should be erected, where necessary to control such exposures.

10.5.2.7 Batteries are frequently employed to provide back-up power in the nacelle and hub of a wind turbine proper, and other support structures (e.g., control rooms). Batteries should be provided adequate ventilation and should be kept clean.

10.5.2.8 Special-purpose electrical heaters can be used in wind turbine nacelles to provide for oil sump and space heating. These heaters should be listed for the type of use in which they are employed.

10.5.2.9 Lightning protection for blades, nacelles, towers, power lines, transformers, and support structures should be provided in accordance with NFPA 780 or IEC 62305, *Protection Against Lightning*.

10.5.2.10 Materials of construction should be noncombustible or less-flammable materials whenever possible. Such principles should be applied to nacelles, towers, O&M/control buildings, and other support structures such as relay houses, switchyard control buildings, and power conditioning buildings.

10.5.2.11 High speed brakes (if used) can create a large quantity of sparks. The use of shield(s) should be considered to isolate these sparks from combustible equipment components and locations where leaked combustible fluids can accumulate.

10.5.3 Fire Protection for Wind Generating Facilities.

10.5.3.1 General.

10.5.3.1.1 Determination of the need for fire detection/suppression and associated wind turbine safe shutdown sequence for wind generating facilities should be based on the facility design and layout, including specific equipment and components used in producing power within the facility. This should be addressed in the Fire Protection Design Basis Document with regard to the wind turbine and tower as well as power delivery and control circuits. In addition, consideration should be given to the consequences of loss of a wind turbine unit or multiple units as well as the vulnerability of adjacent structures and equipment to damage.

Copyright 2015 National Fire Protection Association (NFPA). Licensed, by agreement, for individual use and download on June 24, 2015 to LEADER AND READER for designated user PATTARAPORN SRITRAKOOL. No other reproduction or transmission in any form permitted without written permission of NFPA. For inquires or to report unauthorized use, contact licensing@nfpa.org.

10.5.3.1.2 Should the Fire Protection Design Basis Document indicated in 10.5.3.1.1 determine a need for fire detection system(s), the system(s) should be arranged to activate alarms at a constantly attended location or via the provision of remote operator circuits. This applies to nacelles, towers, electrical equipment enclosures, and buildings.

10.5.3.1.3 Due to the remote location of the majority of onshore wind generating facilities and the lack of abundant water supplies, the use of water-based fire protection systems is unlikely. For off-shore facilities, the same is true because the construction of pumping and fire water distribution systems would be cost prohibitive. If the design of a particular facility does, however, permit the use of water suppression systems, these systems should follow the general recommendations in Chapter 7. If the Fire Protection Design Basis Document indicates a need for fire-fighting capability using water, NFPA 1142 should be consulted.

10.5.3.2 Total Flooding Gaseous Systems.

10.5.3.2.1 Where total flooding gaseous systems are used, electrical enclosures, cabinets, or buildings should be arranged for minimum leakage by automatic closing of ventilation dampers and doors, as applicable, and automatic shutdown of fans.

10.5.3.2.2* Maintenance and inspection of total flooding gaseous agent systems and interlocked equipment are critical.

10.5.3.2.3 For electrical enclosures or cabinetry located in buildings or other such structures, provisions should be addressed for safely removing the gas and potential toxic combustion by-products from these structures following system actuation.

10.5.3.3 Total Flooding Water Mist Systems.

10.5.3.3.1 Where total flooding water mist systems are used, the system should be installed in accordance with NFPA 750 and should be listed for the application. The system should be installed in accordance with the manufacturer's installation procedures.

10.5.3.3.2 Electrical enclosures, cabinets, and buildings should be arranged for reduced leakage by automatic closing of doors, ventilation dampers, and automatic shutdown of fans.

10.5.3.3.3 The water (and agent) supply should be sized to be capable of providing protection for as long as the hazards above the autoignition temperature exist. The system should be listed and sized for the application.

10.5.3.4 Compressed Air Foam Systems.

10.5.3.4.1 Where compressed air foam systems are used, the system should be installed in accordance with NFPA 11 and should be listed for the application. The system should be installed in accordance with the manufacturer's installation procedures.

10.5.3.4.2 The water (and agent) supply should be sized to be capable of providing protection for as long as the hazards above the autoignition temperature exist. The system should be listed and sized for the application.

10.5.3.5 Fixed Aerosol Fire Extinguishing Systems. Where provided, fixed aerosol fire extinguishing systems should be installed in accordance with the requirements of NFPA 2010.

10.5.3.6 Nacelle Fire Protection.

10.5.3.6.1 The need for automatic fixed fire protection within the nacelle of a wind turbine generator should be based on the Fire Protection Design Basis Document and associated Fire Risk Evaluation. Fire suppression within sealed electrical enclosures and cabinets is discussed in 10.5.3.2 and 10.5.3.3. A local application system is more appropriate for unsealed electrical enclosures and cabinets within the nacelle and tower. Likewise, a local application extinguishing system might be appropriate for the gearbox lubrication system or hydraulic control system. If used, fire suppression capability should be provided for oil piping or any area where oil can flow, accumulate, or spray. Fire extinguishing systems, where provided for hydraulic control equipment, should include protection of reservoirs, pumps, accumulators, piping, and actuating systems. Listed systems should be used.

10.5.3.6.2* Discharge rates and duration should be such that cooling and shutdown occur to prevent re-ignition of the fire. System operation should be arranged to coincide with automatic shutdown of the wind turbine.

10.5.3.6.3 The positioning of local application nozzles should be such that maintenance access to the wind turbine components within the nacelle is maintained.

10.6 Electrical Equipment Enclosures and Buildings.

10.6.1 The size and complexity of the wind generating facility site will determine what, if any, control enclosures are provided. Control enclosures are typically used for power conditioning and grid stability equipment and are designed to be unattended. This type of enclosure contains control panels, switchgear, batteries, relays, rectifiers, and electronic switching circuits.

10.6.2* Auxiliary electrical equipment enclosures, where provided, might contain excitation equipment, switchgear, current transformers, potential transformers, grounding transformers, and other electrical equipment.

10.6.3 A smoke detection system should be installed to provide early warning and alarm functions in the event of an electrical fire within the enclosure.

10.6.4 An automatic suppression system should be considered for the enclosures.

Chapter 11 Solar Thermal Power Generation

11.1* General. Chapter 11 covers fire hazards associated with solar power generating stations. The process used in current commercial applications typically involves one of two basic technologies:

(1) Concentrated solar power (CSP), which involves using solar radiation to heat a working fluid which, in turn, is used to generate steam to drive a steam turbine generator.
(2) Photovoltaic (PV) solar power that is associated with the use of PV panels in various arrays to convert energy from the sun to dc electrical energy that is subsequently converted to ac power for delivery to the grid.

11.2 Application of Chapters 4 through 7, 16, and 17.

11.2.1 The recommendations contained in Chapters 4 through 7, 16, and 17 apply. The Fire Protection Design Basis Document should determine which recommendations apply

Copyright 2015 National Fire Protection Association (NFPA). Licensed, by agreement, for individual use and download on June 24, 2015 to LEADER AND READER for designated user PATTARAPORN SRITRAKOOL. No other reproduction or transmission in any form permitted without written permission of NFPA. For inquires or to report unauthorized use, contact licensing@nfpa.org.

to any specific facility. This determination is done by evaluating the specific hazards that exist in the facility and evaluating the level of acceptable risk for the facility. The remaining paragraphs in this chapter provide recommendations that are beyond the scope of other chapters in this recommended practice.

11.3* Risk Considerations.

11.3.1* Photovoltaic (PV) Power. Major hazards associated with PV generating plants are as follows:

(1) Electrical fires associated with failed PV module connections or string cabling
(2) Hydraulic oil fires associated with the hydraulic oil systems used for multi-plane tracker positioning of the PV modules
(3) Inverter, switchgear, and cable fires
(4) Transformer failure fires
(5) Wildland fires around arrays of PV modules and strings

11.3.2* Concentrated Solar Power. The major hazards associated with concentrated solar generating plants are as follows:

(1) Release of large quantities of combustible HTF
(2) Shielded fires involving large quantities of HTF in the heater
(3) Lubricating and control oil fires
(4) Switchgear and cable fires
(5) Transformer failure fires
(6) Wildland fires around arrays of solar collection assemblies

11.3.3 Determination should be made with regard to damage that would be caused by a release of HTF. Spacing and design of critical equipment and structures should limit damage in the event of a fire exposure in both the solar field and power generation areas.

11.4 Heat Transfer Fluid (HTF).

11.4.1 Pumps and Piping.

11.4.1.1* ANSI/ASME B31.1, *Power Piping*, should be followed in the design of HTF piping systems. Piping and fittings should be properly designed to resist an exposure fire until protection can be achieved by water spray. Careful consideration should be given to the design, application, construction, and installation of connections (rotating ball joint, flexible hose, etc.) employed in areas such as the HTF loop connections of adjacent solar collector assemblies to prevent possible sources of HTF leaks. Gaskets and seals should be compatible with HTF. Flanges and piping connections on HTF systems should have guards.

11.4.1.2 Piping and components containing and using HTF should be located outside.

11.4.1.3 Pressure monitoring with alarm to a constantly attended area upstream of the HTF heat exchanger and on each HTF loop, and interlocks to shut down pumps or isolate a loop in the event of pressure drop, should be provided.

11.4.1.4 Consideration should be given to the use of remotely operated emergency isolation valve(s) in the piping arrangement to reduce the volume of flammable fluid released. Actuators for remotely operated emergency isolation valves should be controlled pneumatically, electrically, or both.

(1) Pneumatic operation is preferred. This method provides "fail safe valve(s)" that close on loss of instrument air or electrical power. If pneumatic power is required to close the valve(s), the air lines and fittings should be of stainless steel construction.
(2) Electrically operated valves and associated cabling should be provided with fireproofing, allowing cable to remain in service when exposed to a 30-minute UL 1709 time-temperature exposure. Cable for valves that fail in the closed position on loss of power need not be fireproofed.
(3) Remote actuation controls or devices should be located in a constantly attended control room. If not, they should be at least 50 ft (15.2 m) from anticipated leak points.

11.4.1.5 A means to direct leaking HTF away from important equipment and structures should be provided. Sloping the ground to channel leaking HTF to safe areas and curbs to prevent flow toward equipment can be used.

11.4.1.6 Stone or crushed rock surfaces could be an effective fire control measure near high value or critical process equipment *(see 5.5.6)*.

11.4.1.7 HTF piping and component relief valves should be positioned in such a way that discharges of either liquid or vapor occur at a location that will limit fire exposure to critical equipment and/or adjacent equipment or structures.

11.4.1.8 HTF piping should be insulated or routed away from combustible materials.

11.4.1.9 Use of double mechanical seals on pumps to reduce potential sources of leaks should be considered.

11.4.2 HTF Heater Protection.

11.4.2.1 An emergency dump system should be provided to carry HTF to a safe location.

11.4.2.2 An internal fixed fire extinguishing system should be provided for the heater.

11.4.2.3 Burner front fire protection systems should be provided *(see 7.5.1)*.

11.4.2.4 A means should be provided to identify tube rupture, and valving should be provided to isolate the tube or the header supplying HTF to the tube where a significant gravity flow could occur.

11.4.2.5 The fuel supply to the heater should be capable of being remotely shut off or isolated through action taken in the control room or in a constantly attended area.

11.4.2.6 Controls and instrumentation safeguards should be provided for heaters as identified in NFPA 86 and the equipment manufacturer's recommendations. Consideration should be given to include monitoring, alarms, and/or automatic shutdown for the following conditions:

(1) Low HTF flow
(2) High HTF outlet temperature
(3) Low fuel gas pressure or low liquid fuel flow
(4) Flame failure
(5) High exhaust stack temperature

11.5 Fire Protection.

11.5.1 Supports for steam generator heat exchangers, HTF heaters, and other equipment containing liquid hydrocarbon holdup should be protected to prevent structural collapse of these units in event of a pool fire. In addition, protection for supports for adjacent critical equipment, such as pipe supports, within 20 ft to 40 ft (6.1 m to 12.2 m), depending on the

Copyright 2015 National Fire Protection Association (NFPA). Licensed, by agreement, for individual use and download on June 24, 2015 to LEADER AND READER for designated user PATTARAPORN SRITRAKOOL. No other reproduction or transmission in any form permitted without written permission of NFPA. For inquires or to report unauthorized use, contact licensing@nfpa.org.

Fire Protection Design Basis Document, should be considered. Protect structural supports with either of the following:

(1) A 2-hour fire resistance rating when tested by the UL 1709 time-temperature exposure. If a coating is used for outdoor applications, it should be acceptable for outdoor use.
(2) Water spray protection in accordance with NFPA 15.

11.5.2 As solar generating stations are typically located in remote areas, NFPA 1142 should be consulted if the design basis indicates the need for water-based fire protection.

11.5.3 Equipment such as HTF pumps, surge tank areas, steam generator heat exchanger areas, HTF ullage equipment, and ground area where HTF fluid could spray, flow, or accumulate should be protected by automatic water-based or foam fire protection systems.

11.5.4 Consideration should be given to the placement of hydrants and monitors about the solar field to provide strategic coverage of all HTF piping associated with solar collection assemblies and HTF supply and distribution piping. Based on the completed Fire Protection Design Basis Document, an alternative could be the use of fire/water trucks if the site water supply so dictates. This will help in early manual fire-fighting and exposure control and must be in coincidence with site environmental concerns and plans.

11.5.5 Particular care should be practiced with respect to adequate spatial separation and protection from wildland fires as well as the control of vegetation where fields of CSP solar collection assemblies or PV panels might be located. Guidance regarding vegetation clearance, separation distance, and emergency planning can be found in NFPA 1143 and NFPA 1144.

11.5.6 Per the completed Fire Protection Design Basis Document, an automatic listed fire detection and/or protection system should be provided for the following areas (where the hazard is lube oil or hydraulic oil, a listed fire-resistant fluid is an acceptable alternative to fixed fire protection):

(1) Lubrication systems
(2) Hydraulic control systems, including those associated with solar collector assembly and solar panel/module/string tracking systems
(3) Electrical equipment rooms, including control, computer, communications, cable trays, and tunnels, in accordance with Chapter 7
(4) Inverter cabinets and associated transformers, especially if the solar plant design features a significant concentration of inverters in one location

Chapter 12 Geothermal Power Plants

12.1 General. Chapter 12 covers fire and explosion hazards and recommended protection criteria associated with geothermal power plants.

12.2 Application of Chapters 4 through 7, 16, and 17.

12.2.1* The recommendations contained in Chapters 4 through 7, 16, and 17 apply to all geothermal power plants (direct steam, flash steam, and binary). The Fire Protection Design Basis Document should determine which recommendations apply to any specific facility. This determination is done by evaluating the specific hazards that exist in the facility and evaluating the level of acceptable risk for the facility. The remainder of this chapter provides recommendations that are not included in other chapters in this recommended practice.

12.2.2 In general, risk considerations for direct steam and flash steam geothermal plants are the same as those for conventional steam turbine power plants. For binary plants, the differences are provided below in this chapter. Major hazards are as follows:

(1) Lubricating and control oil fires
(2) Combustible cooling tower construction
(3) Switchgear and cable fires

12.3 Binary Plants. Recommendations in this section apply to binary plants.

12.3.1 Risk Considerations. The major hazards associated with binary plants are as follows:

(1) Release of flammable liquid above its boiling point with potential fire exposure to other equipment or a potential vapor cloud explosion
(2) Pool fire from release of flammable liquid
(3) Combustible cooling tower construction
(4) Lubricating and control oil fires
(5) Switchgear and cable fires

12.3.1.1* Determination should be made with regard to damage that could be caused by a release of flammable organic fluid as a liquid or as a vapor cloud. Spacing and design of critical equipment and structures should be such so as to limit damage in the event of explosion or fire exposure.

12.3.2 Location.

12.3.2.1 Prevailing wind direction with regard to arrangement of major components should be considered, because this will reduce the possibility of a release exposing critical equipment or adjacent units.

12.3.2.2 Components containing flammable working fluid should be located outside or in adequately ventilated enclosures. Adequate ventilation is considered to be one that limits concentration to less than 25 percent of the LFL.

12.3.2.3 Working fluid pumps should be located so as not to expose critical equipment.

12.3.2.4 Potential fire exposures such as turbine lube oil reservoirs and working fluid storage tanks should be located so as not to expose critical equipment.

12.3.3 Fluids.

12.3.3.1 Process Structures Containing Flammable Fluids.

12.3.3.1.1 Supports for process structures to prevent collapse of these units in the event of a pool fire should be protected. One or more of the following should be considered:

(1) Steel protected with a 2-hour rated coating (listed in accordance with UL 1709, *Standard for Rapid Rise Fire Tests of Protection Materials for Structural Steel*) acceptable for outdoor use
(2) Water spray on the columns in accordance with NFPA 15
(3) Adequate drainage (structure on elevated ground with the ground sloped away from the equipment)

12.3.3.2 Pumps and Piping for Flammable Fluids.

12.3.3.2.1 ANSI/ASME B31.1, *Power Piping*, and ANSI/ASME B31.3, *Process Piping*, should be used to design geothermal fluid and hydrocarbon piping systems.

Copyright 2015 National Fire Protection Association (NFPA). Licensed, by agreement, for individual use and download on June 24, 2015 to LEADER AND READER for designated user PATTARAPORN SRITRAKOOL. No other reproduction or transmission in any form permitted without written permission of NFPA. For inquires or to report unauthorized use, contact licensing@nfpa.org.

12.3.3.2.2 Protection of pumps, associated piping, and fittings using automatic water-spray systems should be considered if either of the following applies:

(1) They are located in an area exposing other equipment.
(2) They cannot be remotely isolated.

12.3.3.2.3 Relief valves should discharge at a location that will limit fire exposure to critical equipment.

12.3.3.2.4 Use of double mechanical seals on pumps to reduce potential sources of leaks should be considered.

12.3.3.2.5 Emergency isolation valve(s) in the piping arrangement to reduce size of possible flammable fluid release should be provided. The following should be considered:

(1) Actuators for remote-operated emergency isolation valves should be pneumatically or electrically powered. The preferred method would be to provide "fail safe valve(s)" that close on loss of instrument air or electrical power.
(2) If pneumatic power is required to close the valve(s), the air lines and fittings should be of stainless steel construction and electrically operated valves and associated cabling should be provided with fireproofing having a 15-minute rating.
(3) Remote actuation stations are ideally located in a constantly attended control room but, if locating them such is not possible or practical, they should be located at least 50 ft (15.2 m) away from anticipated leak points.

12.3.3.2.6 Pressure relief should be provided for any section of the system containing a low vapor pressure flammable fluid that can be isolated between two valves.

12.3.3.3 Control of Leaking Flammable Fluids.

12.3.3.3.1 A means to direct leaking flammable fluid away from important equipment and structures should be provided. Sloping the ground to channel leaking fluid to safe areas and curbs to prevent flow toward equipment are some methods that can be used.

12.3.3.3.2 Porous ground surfaces such as stone or soil that can control surface burning could be effective fire control measures near valuable process equipment.

12.3.3.4 Vapor Detection.

12.3.3.4.1 Vapor detection should be provided for equipment subject to leaks of flammable fluid or vapors, which will allow early warning so corrective action can be taken before the leak increases to an uncontrollable level.

12.3.3.4.1.1 For attended plants, vapor detection systems should alarm at a constantly attended location such as the control room. The following should be considered:

(1) Alarm from one detector should be investigated immediately.
(2) Consideration should be given to automatic equipment shutdown in the event two detectors alarm simultaneously.

12.3.3.4.1.2 For unattended plants, vapor detection should provide for automatic shutdown and notification.

12.3.3.5 Electrical.

12.3.3.5.1 All electrical equipment located in a classified area should be Class I, Division 2 or Zone 2 and the appropriate group (see Article 500 or Article 505 of *NFPA 70* to determine the group). Alternatively, switchgear buildings, motor control centers, and control rooms should be pressurized to prevent vapor entry using air from a safe location if they could be exposed to a flammable vapor cloud. Pressure should be monitored, with alarm on loss of pressure to a constantly attended location.

12.3.3.5.2 Oil-insulated transformers should be protected as outlined in Chapter 5.

12.3.3.5.3 Battery rooms should be protected as outlined in Chapter 7.

12.3.3.5.4 Electrical power, control cabling, and instrument cabling required for safe shutdown of critical equipment during emergency plant shutdown should be routed underground or around high hazard areas. If routed above ground, cabling should be protected with fireproofing material in accordance with API Publication 2218, *Fireproofing Practices in Petroleum and Petrochemical Processing Plants.*

12.3.3.5.5 Arc resistant switchgear *(refer to IEEE C37.20.7, Guide for Testing Metal-Enclosed Switchgear Rated up to 38 kV for Internal Arcing Faults)* should be used.

12.4 Fire Protection.

12.4.1 The Fire Protection Design Basis Document should determine the need for fire detection/suppression for geothermal facilities, based on the facility design and layout, including specific equipment and components used. The Fire Protection Design Basis Document should examine the type of detection needed as well as alarms and emergency shutdown devices (ESDs).

12.4.2 An automatic listed fire protection system should be provided for the following areas based on the Fire Protection Design Basis Document (where the hazard is lube oil or hydraulic oil, a listed fire-resistant fluid is an acceptable alternative to fixed fire protection):

(1) Lubrication systems
(2) Hydraulic control systems
(3) Protection of electrical equipment rooms, including control, computer, communications, cable trays, and tunnels, in accordance with Chapter 7

12.4.3 Corrosive environments could require special attention for materials used in fire protection systems and equipment.

12.4.4 For the equipment and ground area where flammable fluids could flow and expose critical equipment, consideration should be given to protection by fixed water spray fire protection systems and/or monitor nozzles, which will help in fire fighting and exposure control.

(1) Adjustable monitor nozzles should be used with flow rates of a minimum of 500 gpm (1893 L/min) that will overlap at least one other spray pattern from another monitor nozzle.
(2) Consider the prevailing winds when locating monitor nozzles. It should be assumed that due to seasonal changes in wind direction there will be times when some monitor nozzles will be downwind and not accessible due to the vapor cloud and/or heat generated from a fire.
(3) Fixed water spray systems should be designed in accordance with NFPA 15.

Copyright 2015 National Fire Protection Association (NFPA). Licensed, by agreement, for individual use and download on June 24, 2015 to LEADER AND READER for designated user PATTARAPORN SRITRAKOOL. No other reproduction or transmission in any form permitted without written permission of NFPA. For inquires or to report unauthorized use, contact licensing@nfpa.org.

Chapter 13 Identification and Protection of Hazards for Integrated Gasification Combined-Cycle Generating Facilities

13.1* General. Chapter 13 identifies fire and explosion hazards associated with integrated gasification combined-cycle (IGCC) electric generating facilities and specifies recommended protection criteria.

13.1.1 The major fire and explosion hazards associated with IGCC facilities being designed and installed today are as follows:

(1) Combustible fuels that are stored and processed in the fuel preparation area and subsequently delivered to the combustor
(2) An uncontrolled reaction involving oxygen and synthesis fuel gas (syngas) in the gasifier or downstream equipment, often due to loss of combustible fuel without loss of oxygen or inadequate purge procedures
(3) The high temperatures and pressures produced in the gasifier
(4) Flammable and combustible liquids associated with lubrication and hydraulic oil systems (compressors, pumps, fans, turbines, etc.)
(5) Fuel gas highly enriched in hydrogen moving from the gasifier to the combustion turbine(s)
(6) Natural gas or fuel oil used as an alternative fuel for the combustion turbine(s) in the combined-cycle power plant
(7) Electrical components and wiring
(8) Contaminants in the plant oxygen systems (such as hydrocarbons, residual materials from inadequate cleaning, or inappropriate materials of construction) that result in detonations
(9) Propane or other startup/pre-heat fuels
(10) Air or oxygen introduced into the flare system

New technologies are being explored and incorporated at a rapid pace. The impact of the new technologies should be considered based on the merits of any specific new design element.

13.1.2 Due to the hazards involved in the processing, storage, and handing of flammable gas mixtures, many of the requirements of NFPA 54, NFPA 59, and NFPA 59A are applicable with respect to the following:

(1) Container, tank, piping, and valve construction safety features
(2) Instrumentation and controls
(3) Electrical equipment classification for hazardous atmospheres
(4) Loading/unloading stations
(5) Equipment spacing
(6) Building construction
(7) Diking, impounding, drainage, etc.
(8) Fire protection, including hose streams, monitor nozzles, fixed water spray, fire extinguishers, et cetera

13.2 Application of Chapters 4 through 7, 16, and 17. The recommendations contained in Chapters 4 through 7, 16, and 17 readily apply to IGCC facilities. With the addition of the different technologies involved in syngas production and the differences in syngas with respect to natural gas, the Fire Protection Design Basis Document should determine which recommendations apply to any specific IGCC facility. This determination is done by evaluating the specific hazards that exist in the facility and evaluating the level of acceptable risk for the facility. For IGCC facilities, it is expected that most of the recommendations will apply, although there could be particular plants for which some of the recommendations will not apply since the hazards described might not exist (e.g., no air separation unit). The user is responsible for determining the properties of the materials used or generated in the facility (vapor density, ignition temperature, LFL, etc.). It is recommended that designers seek guidance from those having specialized experience to understand the unique characteristics of any particular fuel or technology in order to properly apply the appropriate portions of this and other applicable documents.

13.3* General Design and Equipment Arrangement.

13.3.1 Physical separation should be provided between the following as determined by the Fire Protection Design Basis Document:

(1) The feedstock fuel preparation and storage area
(2) The power plant, including switchyard
(3) Gasification plant
(4) Air separation unit
(5) Syngas cleaning/treatment area
(6) Chemical production areas
(7) Adjacent properties (e.g., refinery, process facility, aboveground pipelines, tank farms, or natural gas facilities that could present a severe exposure)

13.3.2 Consideration should be given to the high temperatures, high pressures, and combustible gases (e.g., hydrogen) content associated with syngas developed in the gasification plant. Proper control of combustible material in and around the gasifier, syngas cooler, and associated piping and vessels is paramount, as is proper area classification and the use of listed electrical equipment.

13.3.3 For recommendations regarding containment and drainage of liquids, see Section 5.6.

13.3.4 Piping and vessels to contain syngas should be purged with inert gas on startup before introduction of syngas.

13.4 Emergency Response.

13.4.1 The combination of a gasification plant and combined-cycle power generation plant results in a facility not unlike a chemical plant, and the Fire Protection Design Basis Document should address delayed response due to uncertainty of emergency response personnel. The Fire Protection Design Basis Document can establish the need to provide additional fire protection measures to prevent a major fire spread prior to the arrival of fire-fighting personnel.

13.4.2 Given the plant size and hazards, annunciation of fire-signaling systems to a constantly attended locations is critical for emergency response. The location and design of fire-signaling systems, including emergency shutdown stations and their interfaces with IGCC facility control and information systems, should be considered.

13.4.3 It is important that the responding fire brigade and public fire department be familiar with access to and movement around the IGCC facility site and specific hazards with respect to the gasification plant and its support systems as well as the power plant. This coordinating effort is essential and should be reflected in the IGCC plant's fire emergency plan.

Copyright 2015 National Fire Protection Association (NFPA). Licensed, by agreement, for individual use and download on June 24, 2015 to LEADER AND READER for designated user PATTARAPORN SRITRAKOOL. No other reproduction or transmission in any form permitted without written permission of NFPA. For inquires or to report unauthorized use, contact licensing@nfpa.org.

13.5 IGCC Generating Facilities.

13.5.1 General.

13.5.1.1 The installation and operation of IGCC generating facilities should be in accordance with standard practices of the industry and the various chapters of this recommended practice as well as NFPA 59 and NFPA 85.

13.5.1.2 Applicable PSM techniques should be considered.

13.5.1.3 Fuel availability; type of fuel; site-specific considerations, including environmental limits; and an engineering firm's typical layout will govern IGCC facility design. This design will include the choice of fuel and the fuel preparation systems needed, the design and layout of the gasification plant, the need for an air separation unit, and the amount of by-product reclamation systems. This, in turn, will dictate how many separate structures or enclosures will be provided in addition to the power plant's gas turbine(s), HRSG(s), and steam turbine generator(s).

13.5.2 Prevention of Fires in IGCC Facilities.

13.5.2.1 Piping.

13.5.2.1.1 The principles outlined in NFPA 30 should be applied to gear boxes and lubricating oil sumps, reservoirs, pumps, coolers, filters, and associated piping that are necessary for operation of the fuel preparation systems, air separation unit and other support functions, and the combined-cycle power plant. As a minimum, piping systems supplying flammable and combustible liquids should be designed to minimize hydraulic and lubricating oil piping failures as follows:

(1) Rigid metal piping should be designed with freedom to deflect with the system/component the piping is serving, in any direction, at the interface with the component. Properly designed metallic hose is an alternative for hydraulic and lube oil lines in high vibration areas to allow relative motion between rigid pipe supply lines and manifolds, and at the associated points of entry.
(2) In syngas areas, piping and vessels should be appropriately designed with adequate corrosion allowances. Appropriate maintenance and monitoring frequencies should be identified.
(3) Rigid piping connected directly to pumps, sumps, and gearboxes should be supported such that failures will not occur due to the natural frequency of the piping coinciding with the rotational speed of the gearbox, drive shaft, prime mover, and load. Care should be taken in the design of pipe supports to avoid vibrations induced by other equipment that can excite its natural frequency.
(4) Welded pipe joints should be used where possible. Threaded couplings and flange bolts in oil piping should be assembled using a torque wrench and torqued to the manufacturer's requirements. Threaded fittings should have a positive locking device to prevent unscrewing.
(5) Instrumentation tubing, piping, and gauges should be protected from accidental mechanical damage. Sight glasses should be listed.
(6) Where practical, lubricating oil lines should use "guarded" pipe construction with the pressure feed line located inside the return line. If this not practical, piping sleeves and/or tubing and flange guards should be used to reduce the possibility of oil atomization with subsequent spray fires.
(7) If practical, fluid piping should not be routed above electrical equipment to preclude leaked fluid dripping on the equipment.

13.5.2.1.2 Piping through which syngas and natural gas is directed should be constructed in accordance with API RP 941, *Steels for Hydrogen Service at Elevated Temperatures and Pressures in Petroleum Refineries and Petrochemical Plants*, and ASME B31.3, *Process Piping*. Specific design considerations should recognize the hazards imposed by the high hydrogen concentration within the syngas that is directed to the combustion turbine(s).

13.5.2.1.3 Plant design should address the need for flare stacks as required by the various processes built into the plant design. Guidance on flare stack design can be found in ANSI/API RP 521, *Guide for Pressure Relieving and Depressurizing Systems*, and API Standard 537, *Flare Details for General Refinery and Petrochemical Service*.

13.5.2.2 Monitor and Trip Functions for IGCC Plants. The following monitors and/or trip functions should be considered where appropriate for the equipment design to safely monitor the operations and processes taking place within the facility and initiate a safe shutdown when necessary:

(1) Pressures, temperatures, and flow rates of fuel supplies, reaction enhancers, syngas, and combustion contaminant recovery systems
(2) Combustion safeguards and reaction control system in the gasifier, combustion turbine generator(s), and heat recovery steam generator(s) (if equipped with duct burners)
(3) Combustible gas detection in the event of a fuel gas leak
(4) Flame detection in the event of a fuel gas leak
(5) Carbon monoxide detectors and warning lights to signal the presence of toxic atmosphere
(6) Liquid levels in process vessels

13.5.2.3 Oil Systems.

13.5.2.3.1 Lubrication and hydraulic oil systems should minimize the amount of oil and the amount of piping and associated components needed.

13.5.2.3.2 For gearbox and bearing lubrication systems, a listed fire-resistant fluid should be considered.

13.5.2.3.3 Hydraulic control systems should use a listed fire-resistant hydraulic fluid.

13.5.2.4 Electrical.

13.5.2.4.1 Arc resistant switchgear *(see IEEE C37.20.7, Guide for Testing Metal-Enclosed Switchgear Rated Up to 38 kV for Internal Arcing Faults)* should be used.

13.5.2.4.2 Electrical power, control, and instrument cabling required for safe shutdown of critical equipment during emergency plant shutdown should be routed outside the fire area. If routed through the fire area, it should be protected with fireproofing material in accordance with API Publication 2218, *Fireproofing Practices in Petroleum and Petrochemical Processing Plants*.

13.5.2.4.3 Oil-insulated transformers should be protected as outlined in Chapter 5.

13.5.2.4.4 Battery rooms should be protected as outlined in Chapter 7.

Copyright 2015 National Fire Protection Association (NFPA). Licensed, by agreement, for individual use and download on June 24, 2015 to LEADER AND READER for designated user PATTARAPORN SRITRAKOOL. No other reproduction or transmission in any form permitted without written permission of NFPA. For inquires or to report unauthorized use, contact licensing@nfpa.org.

13.5.2.4.5 Electrical equipment in areas with potentially hazardous atmospheres should be designed and installed in compliance with Articles 500 and 501 of *NFPA 70* and ANSI C2, *National Electrical Safety Code*.

13.5.3 Fire Protection.

13.5.3.1 The Fire Protection Design Basis Document should determine the need for fire detection/suppression for IGCC facilities should be based on the facility design and lay-out, including specific equipment and components used in producing syngas as well as power within the facility. This can require separate fire risk evaluations of the gasification plant, gasifier support systems, and combined-cycle power plant. Fuel preparation and delivery systems are addressed in Chapter 7. The gasification plant analysis should examine the need for and location of gas and other types of detectors as well as alarms and ESDs. The location of a flare stack to safely release any flammable gases in the event of a process upset, gas turbine trip, or safety valve actuation should also be considered. Flash tanks/drums that allow direct venting of syngas or other combustible gases to the atmosphere should not be used.

13.5.3.2 An IGCC facility will feature many different processes and fuels in the production of syngas and its use in the combined-cycle power plant; therefore, the Fire Protection Design Basis Document should determine the use of a number of types of fire protection systems, with primary reliance on water-based systems.

13.5.3.3 An automatic fire protection system should be provided for the following areas in accordance with the Fire Protection Design Basis Document (where the hazard is lube oil or hydraulic oil, a listed fire-resistant fluid is an acceptable alternative to fixed fire protection):

(1) Lubrication systems
(2) Hydraulic control systems
(3) Catalytic agent and product storage vessels and tank areas
(4) In accordance with Chapter 7, electrical equipment rooms, including control, computer, communications, cable spreading, cable tunnels, and grouped cable
(5) Fuel unloading, storage, and transfer/delivery systems and areas

13.5.3.4 Special consideration should be given to the unique geometries associated with some gasifier and syngas cooler designs with respect to fire main and hydrant/monitor coverage.

13.6 Structures.

13.6.1 Critical structures within the gasification plant should be protected in accordance with API Publication 2218, *Fireproofing Practices in Petroleum and Petrochemical Processing Plants*.

13.6.2 Consideration should be given to any exterior insulation used on structures, vessels, and piping, to minimize any possibility of an external fire hazard on these structures.

13.7 Control/Electrical Equipment Enclosures and Buildings.

13.7.1 The size and complexity of the IGCC facility site will determine what control and support enclosures are provided, as modified by the weather protection requirements associated with the geographical area in which the IGCC facility is located.

13.7.2 A careful analysis of the facility design and layout should be made to determine the most appropriate location for the gasification plant and power plant control rooms, or an integrated control if applicable. In addition to location, consideration should be given to the need to incorporate blast resistance, building/room pressurization, and fire protection into the building/room design.

13.7.3 A smoke detection system should be installed to provide early warning and alarm functions in the event of an electrical fire within the enclosure.

13.7.4 An automatic suppression system should be considered for the enclosures.

13.8 Syngas Within Buildings and Enclosures.

13.8.1 When syngas piping and associated appliances are within a building or enclosure, ventilation should be provided. Syngas contains hydrogen. Hydrogen is more likely to leak from pipe fittings than other gases, increasing the fire and explosion hazard that would be encountered whenever such piping and associated metering and control appliances are installed within a building or enclosure.

13.8.2 Electrical classification of equipment should be in accordance with NFPA 497; API 500, *Recommended Practice for Classification of Locations for Electrical Installations at Petroleum Facilities Classified as Class I, Division I and Division II*; API 505, *Recommended Practice for Classification of Locations for Electrical Installations at Petroleum Facilities Classified as Class I, Zone 0, and Zone 2*.

13.9* Prevention of Internal Explosions in Combustion Turbines. In addition to those listed in 8.5.2, the precautions in 13.9.1 and 13.9.2 apply.

13.9.1 Where syngas has independent piping to the combustor, a dedicated inert gas purge should be provided for the piping downstream of the last block valve in the control system. Additionally, an inert gas block should be provided between the last block valve and the next valve upstream to prevent the release of unburned syngas into the turbine. This purge and block arrangement prevents possible reignition and/or explosion in the gas turbine.

13.9.2 Where common fuel piping system is used for delivering both syngas and a gaseous startup fuel to the combustor, the startup fuel will provide the necessary buffer to prevent unburned syngas from entering the turbine under normal operating conditions. However, in an emergency stop/trip situation, the shutdown occurs without a transfer to the startup fuel, which leaves syngas in the fuel delivery piping. Consequently, an inert purging system is needed to avoid the potential for releasing unburned syngas into the turbine.

Chapter 14 Identification and Protection of Hazards for Hydroelectric Generating Plants

14.1 General.

14.1.1 Chapter 14 identifies fire and explosion hazards of hydroelectric generating stations. Such facilities include both dam-type facilities using penstocks to direct water to vertical-type hydro turbine generators and run-of-the-river facilities in which river water is channeled through axial-type hydro turbine generators. In addition, pumped-storage hydro facilities operate as normal vertical (upper storage to lower storage) hydro stations to produce electrical power and pump water from the lower storage to the upper storage. This chapter specifies recommended protection criteria for all three types of hydroelectric stations.

Copyright 2015 National Fire Protection Association (NFPA). Licensed, by agreement, for individual use and download on June 24, 2015 to LEADER AND READER for designated user PATTARAPORN SRITRAKOOL. No other reproduction or transmission in any form permitted without written permission of NFPA. For inquires or to report unauthorized use, contact licensing@nfpa.org.

14.2 Application of Chapters 4 through 7 and 16 and 17. The recommendations contained in Chapters 4 through 7, 16, and 17 can apply to HVDC converter stations and SVC/SVG. The Fire Protection Design Basis Document will determine which recommendations apply to any specific HVDC or SVC/SVG facility. This determination is done by evaluating the specific hazards that exist in the facility and determining the level of acceptable risk for the facility. It is expected that most recommendations will apply to all HVDC, SVC/SVG, and VFT facilities.

14.3 General Design and Equipment Arrangement.

14.3.1 Adequate separation should be provided between the following, as determined by the Fire Protection Design Basis Document:

(1) To separate the intake hoist housing from generator floor area and from adjacent areas
(2) To separate dam and spillway hoists, including the main power and backup power bus, from adjacent areas such as spillway electrical distribution rooms
(3) To separate the tailrace service gallery from turbine/generator floors and governor hydraulic equipment

14.3.2* Ventilation exhaust systems, particularly those for subsurface portions of underground facilities, should have fans able to operate continually to exhaust smoke and chemical fumes that can result from fires or from extinguishing of fires. The design and selection of the fans and other elements of the system should take into account additional ventilation needs for removing smoke and high-temperature gases. Therefore the fan and its associated components, along with any ductwork, should be capable of handling high temperatures without deforming. The specific weight and volume of the heated air during a fire and the climatic conditions should also be considered. Total fan capacity should be provided so that ventilation requirements can be met with the largest fan out of service.

14.3.3 Fire hazards should not be located in the principal access or air supply (e.g., conduits, shafts, tunnels) in order to avoid loss of fresh air in the event of a fire.

14.3.4 An emergency power supply should be provided for principal drainage pumps in areas where flooding would be dangerous.

14.4 Unattended Facilities.

14.4.1 Hydroelectric plants that are operated unattended or with minimal staffing present special fire protection concerns.

14.4.2 Consideration should be given both to the delayed response time of the fire brigade or public fire-fighting personnel (which can be several hours) and to the lack of personnel available to alert others on site to a fire condition.

14.4.3 The fire risk evaluation should address delayed response and lack of communication. This might establish the need to provide additional fire protection measures to prevent a major fire spread prior to the arrival of fire-fighting personnel. The delayed response by personnel to the site can necessitate automatic shutoff of fire pumps.

14.4.4 If automatic water-based fire suppression systems are utilized, a cycling deluge valve should be considered. The arrangement will depend on the type of system and the hazard protected. Thermal detection is recommended. System design should be in accordance with NFPA 13 or NFPA 15.

14.4.5 Remote annunciation of the fire signaling panel to one or more constantly attended locations is critical for emergency response. The fire signaling panel should be located at the entry to the plant. Special consideration should be given to alerting personnel in confined spaces, such as in scroll/spiral cases or draft tubes, that a fire alarm system has been activated.

14.4.6 An emergency lighting system for critical operating areas that depends on batteries or fuel supplies should be manually operated from a switch at the entry to the plant. The emergency lighting can be permitted to consist either of fixed units or of portable lights *(see 5.6.2)*.

14.4.7 It is important that the responding fire brigade or public fire-fighting forces be familiar with access, plant fire protection systems, emergency lighting, specific hazards, and methods of fire control. This should be reflected in the plant fire emergency plan *(see 9.4.4)*.

14.4.8 The air supply and exhaust systems for the plant should be shut down automatically in the event of a fire. Manual override should be located at the entry to the plant so that emergency responders can activate these controls upon arrival.

14.5 Identification and Protection of Hazards.

14.5.1 General. The identification and selection of fire protection systems should be based on the fire risk evaluation. This chapter identifies fire and explosion hazards in hydroelectric generating stations and specifies the recommended protection criteria unless the fire risk evaluation indicates otherwise.

14.5.2 Turbine-Generator Hydraulic Control and Lubricating Oil Systems.

14.5.2.1 Hydraulic Control Systems.

14.5.2.1.1 Hydraulic control systems should use a listed fire-resistant fluid.

14.5.2.1.2 Determination of the need for fire-resistant fluid should be based on the quantity of fluid involved in the system, whether or not equipment that utilizes this fluid will operate hot or be exposed to external sources of ignition, and whether exposure problems are created for adjacent equipment by the use of non-fire-resistant fluid.

14.5.2.1.3 If a listed fire-resistant fluid is not used, hydraulic control equipment should be protected. Fire extinguishing systems, where installed for hydraulic control equipment, should include protection for reservoirs, other equipment, valves, and associated piping.

14.5.2.2 Wherever possible, oil piping should be welded and flanged to minimize the possibility of an oil leak due to severe vibration.

14.5.2.3 Oil piping should be routed away, or be shielded, from electrical equipment or other sources of ignition.

14.5.2.4* Fixed fire protection for this equipment, where provided, should be as follows:

(1) Automatic wet pipe sprinkler protection systems utilizing a design density of 0.25 gpm/ft^2 (10.2 mm/min) for the entire hazard area
(2) Automatic foam-water sprinkler systems providing a density of 0.16 gpm/ft^2 (6.5 mm/min)

Copyright 2015 National Fire Protection Association (NFPA). Licensed, by agreement, for individual use and download on June 24, 2015 to LEADER AND READER for designated user PATTARAPORN SRITRAKOOL. No other reproduction or transmission in any form permitted without written permission of NFPA. For inquires or to report unauthorized use, contact licensing@nfpa.org.

(3) Gaseous extinguishing systems of either the local application or total flooding types. Safety considerations associated with these systems should be evaluated prior to the selection of gas-type protection systems.
(4) Compressed air-foam systems designed and installed in accordance with NFPA 11 and their listing for the specific hazards and protection objectives specified in the listing

14.5.2.5 Consideration for protection of horizontal and vertical turbine bearings should be made based on the Fire Protection Design Basis Document.

14.5.2.6 Curbs [minimum 6 in. (0.15 m) high], drains, or both should be provided for the oil storage and oil purification areas in accordance with Chapter 5.

14.5.2.7 Fire extinguishing systems, where installed for lube oil systems employing combustible-type oil, should include protection for the reservoirs, pumps, and all oil lines, especially where unions exist on piping and beneath any shielded area where flowing oil can collect. Facilities not provided with curbs or drains should extend coverage for a distance of 20 ft (6 m) from the oil lines, when measured from the outermost oil line.

14.5.2.8 Clean or dirty oil storage areas should be protected based on the fire risk evaluation. These areas generally represent the largest concentrated oil storage in the plant. The designer should consider, at a minimum, the installation of fixed automatic fire protection systems and the ventilation and drainage requirements in Chapter 5.

14.5.3 Generator Pit and Windings.

14.5.3.1* Protection of generator windings consisting of materials that will not extinguish when de-energized should be provided by automatically actuated gaseous extinguishing systems, water spray rings, or both.

14.5.3.2 Fire detection in generator winding should be provided.

14.5.3.3 Protection of generator pits containing auxiliary circuits such as protection current transformers (CTs), neutral transformers, and grounding resistors that are associated with generator protection should be provided by an automatically actuated gaseous extinguishing system or water spray system.

14.5.3.4 Gaseous suppression systems should be actuated by protective relays, fire detection systems, or both.

14.5.3.5 Operation of water spray rings should be interlocked so that the unit will trip before the water spray system activates. Immediately after the generator has been sprayed with a water-based system, it should be mechanically run (electrically isolated and without excitation) for at least 24 hours to avoid creating stator ground faults on both types of winding materials.

14.5.4 Cable Concentrations.

14.5.4.1 Consideration should be given to the use of fire-retardant cable insulation such as those passing the flame propagation test in IEEE 1202, *Standard for Flame-Propagation Testing of Wire and Cable.*

14.5.4.2 Areas with significant concentrations of combustible cable jacketing or oil-filled cable should be protected with automatic sprinkler, water spray, or water mist systems. However, if water-type systems cannot be used, foam or gaseous extinguishing systems should be provided.

14.5.4.3 Sprinkler or water spray systems should be designed for a density of 0.30 gpm/ft^2 (12.2 mm/min) over 2500 ft^2 (232 m^2). This coverage is for area protection. Individual cable tray tier coverage could be required based on the fire risk evaluation.

14.6 Cable Tunnels.

14.6.1 Where protection is required by the fire risk evaluation, cable tunnels should be protected by automatic water spray, automatic wet pipe sprinkler, or foam-water spray systems. Automatic sprinkler systems should be designed for a density of 0.30 gpm/ft^2 (12.2 mm/min) over 2500 ft^2 (232 m^2) or the most remote 100 linear ft (30.5 m) of cable tunnel up to 2500 ft^2 (232 m^2).

14.6.2 Portable high-expansion foam generators can be permitted to be used to supplement a fixed fire protection system(s). *(See NFPA 1901.)*

14.6.3 Ventilation and drainage should be provided for these areas in accordance with Chapter 5.

14.6.4 Indoor Oil-filled Electrical Equipment. Automatic sprinkler, foam-water spray, water spray, and compressed air-foam systems should be considered for oil-filled electrical equipment. Where the hazard is not great enough to warrant a fixed fire suppression system, automatic fire detection should be considered *(see 6.7.2).*

14.6.5 Air Compressors. Automatic sprinkler protection designed for a density of 0.25 gm/ft^2 (10.2 mm/min) over the postulated oil spill or compressed air foam should be considered for air compressors containing a large quantity of oil. Compressed air foam systems should be designed and installed in accordance with NFPA 11 and their listing for the specific hazards and protection objectives specified in the listing. Where the hazard is not great enough to warrant a fixed-fire suppression system, automatic fire detection should be considered *(see 6.7.2).*

14.6.6 Hydraulic Systems for Gate and Valve Operators. Hydraulic systems for gate and valve operators should be designed in accordance with 14.5.2.1. Where the hazard is not great enough to warrant a fixed fire suppression system, automatic fire detection should be considered *(see 6.7.2).*

Chapter 15 High Voltage Direct Current (HVDC) Converter Stations

15.1 General. Chapter 15 identifies the fire hazards and specifies recommended protection criteria for high voltage direct current (HVDC) converter stations, which include both alternating and direct current converters, static var compensator/static var generator (SVC/SVG) facilities, and variable frequency transformers (VFTs).

15.2 Application of Chapters 4 through 7, 16, and 17. The recommendations contained in Chapters 4 through 7, 16, and 17 can apply to HVDC converter stations and SVC/SVG. The Fire Protection Design Basis Document will determine which recommendations apply to any specific HVDC or SVC/SVG facility. This determination is done by evaluating the specific hazards that exist in the facility and determining the level of acceptable risk for the facility. It is expected that most recommendations will apply to all HVDC, SVC/SVG, and VFT facilities.

Copyright 2015 National Fire Protection Association (NFPA). Licensed, by agreement, for individual use and download on June 24, 2015 to LEADER AND READER for designated user PATTARAPORN SRITRAKOOL. No other reproduction or transmission in any form permitted without written permission of NFPA. For inquires or to report unauthorized use, contact licensing@nfpa.org.

15.3 HVDC Converter Stations.

15.3.1 General.

15.3.1.1 Section 15.3 identifies fire hazards that are associated with the operation of HVDC and AC converter stations, SVC/SVG facilities, and VFTs. Conditions that could cause a fire in high voltage equipment include the following:

(1) Loose electrical connections
(2) Electrical insulation or resistance breakdowns
(3) Overheated components
(4) Water leakage or intrusion (e.g., cooling system malfunction, roof leak)
(5) Foreign objects (e.g., tools, metal scrap, rubbish, vermin)

15.3.1.2 The hazards that could present a fire risk at converter stations include the following:

(1) Converter valve assemblies
(2) Valve base electronics and thyristor fault monitoring controls
(3) Thyristor switched capacitors (TSC) control equipment
(4) Thyristor controlled reactor (TCR) control equipment
(5) VFT dc drive
(6) Oil-filled wall bushings
(7) Capacitors containing combustible dielectric fluid or polymers
(8) Transformers
(9) Station services and auxiliary high voltage equipment

15.3.2 Plant Arrangement.

15.3.2.1* Each thyristor valve hall, TSC/TCR valve hall, and VFT hall should be a separate fire area. Each hall should be separated from adjacent fire areas by fire area boundaries in accordance with 5.1.1.3. Unless consideration of the factors of 5.1.1.2 indicates otherwise, it is recommended that fire area boundaries be provided *(see Figure 15.3.2.1)* to separate the following:

(1) Service building
(2) Main control room
(3) Valve electronics rooms
(4) Valve control and pole control equipment room
(5) VFT rotating transformers
(6) Human–machine interface (HMI) controls room
(7) HVAC equipment rooms
(8) Relay room, SCADA room, and remote terminal unit room (RTU)
(9) Control equipment room
(10) Electrical equipment/switchgear room
(11) 125/250 V dc control relay room
(12) Cable tunnel/vault/room(s)

15.3.2.2 Converter valves and associated support equipment should use noncombustible or limited-combustible materials. Where noncombustible or limited-combustible materials are not used, fire-retardant separation barriers should be installed between the following equipment areas:

(1) Valve tier levels, by adding to the bottom tray on each level
(2) Valve modules, by adding to the side of each tray section
(3) Grading capacitors, snubber circuits, and power supplies

15.3.2.3 Smoke or heat vents should be considered in accordance with 5.4.1.

15.3.2.4 Heating, ventilating, and air-conditioning (HVAC) systems for the valve hall should be provided with fire/smoke dampers arranged to shut down to preclude the entry of smoke from sources outside the valve hall structure. Separate dedicated HVAC and smoke management systems should serve each valve hall.

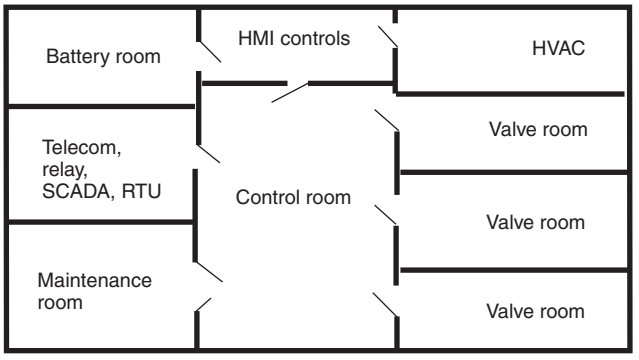

FIGURE 15.3.2.1 Typical Fire Area Separation for Converter Stations.

15.3.2.5 Outdoor converter transformers and oil-filled smoothing reactor(s) should be arranged in accordance with 5.1.4 and 5.5.6.

15.3.2.6 Drainage provisions should be provided for indoor and outdoor oil-filled wall bushings. Drainage should be arranged in accordance with Section 5.5. Indoor oil-filled wall bushings should be provided with means to prevent the spread of oil to adjacent equipment. Where the converter bushings penetrate the valve hall, provisions should be made to prevent the oil contents of the transformer from entering the valve hall.

15.3.2.7 Mercury arc converters should be arranged to minimize the effects of a hazardous material spill or airborne contamination from mercury that could impede fire-fighting efforts and restoration activities.

15.3.3 Fire Prevention.

15.3.3.1 An emergency communication system should be provided throughout the station to expedite assistance in the event of fire.

15.3.3.2 A fire emergency plan should be implemented in accordance with 17.4.4.

15.3.3.3 A regular housekeeping program should be established to maintain combustible and other materials in designated storage areas. Periodic cleaning of the valve and the valve hall structure should be performed in accordance with the manufacturer's instructions for maintaining a clean equipment and building environment.

15.3.3.4* Where stations are attended, control room operator fire emergency training should include, but not be limited to, the following:

(1) Station emergency grounding procedures
(2) Valve hall clearance procedures
(3) Electrical equipment isolation
(4) Timely communication of all fire events to the responding fire brigade and the fire department

15.3.3.4.1 Where stations are operated remotely, operators should be trained in items 15.3.3.4(3) and 15.3.3.4(4). Responding personnel should be trained in items 15.3.3.4(1) and 15.3.3.4(2).

Copyright 2015 National Fire Protection Association (NFPA). Licensed, by agreement, for individual use and download on June 24, 2015 to LEADER AND READER for designated user PATTARAPORN SRITRAKOOL. No other reproduction or transmission in any form permitted without written permission of NFPA. For inquires or to report unauthorized use, contact licensing@nfpa.org.

15.3.4 Fire Protection.

15.3.4.1 Hose stations designed in accordance with NFPA 14 should be located throughout the converter station.

15.3.4.2 Oil-filled wall bushings should be protected with automatic fire suppression system(s). The fire suppression system design should ensure that the fire suppression agent does not affect the converter valve, the arresters, or other energized electrical equipment.

15.3.4.3 Dry-type ac/dc wall bushings, which do not necessitate fire detection or suppression systems, should be considered to eliminate the fire risk associated with oil-filled equipment.

15.3.4.4 Auxiliary equipment areas and other structures should be protected with automatic protection systems in accordance with Sections 7.8 and 7.9. Converter transformers should be protected in accordance with 7.8.7.

15.3.4.5* The valve hall should be provided with a very early warning fire detection (VEWFD) system. Consideration should also be given to providing a second reliable fire detection system such as ionization, photoelectric, projected beam, flame detection, or video cameras. The interlock of VEWFD and the redundant fire detection system should be considered to initiate a fast-switch-off or emergency-switch-off of the respective valve group, TSC valves and TCR valves.

15.3.4.6 For the protection of the converter station equipment and the building, water-based or gaseous agent suppression systems should be considered. The type and design of the suppression systems should be reviewed in consultation with the equipment manufacturer.

15.3.4.7 Emergency preplanning for the fire brigade and the fire department should include manual fire-fighting equipment utilization and deployment training.

15.3.4.8 Dry-type capacitors or capacitors filled with a less flammable liquid should be considered to minimize the fire risk associated with oil-filled equipment.

15.3.4.9 Air core reactors should be considered as an alternative to oil-filled reactors to eliminate the fire risk associated with oil-filled equipment.

Chapter 16 Fire Protection for the Construction Site

16.1 Introduction.

16.1.1 Although many of the activities on electric generating plant and HVDC converter station construction sites are similar to the construction of other large industrial plants, an above average level of fire protection is justified due to life safety consideration of the large number of on-site personnel, high value of materials, and length of the construction period. Consideration of fire protection should include safety to life and potential for delays in construction schedules and plant startup, as well as protection of property.

16.1.2 Major construction projects in existing plants present many of the hazards associated with new construction while presenting additional exposures to the existing facility. The availability of the existing plant fire protection equipment and the reduction of fire exposure by construction activities are particularly important.

16.1.3 For fire protection for plants and areas under construction, see NFPA 241. Chapter 16 addresses concerns not specifically considered in NFPA 241.

16.2 Administration.

16.2.1 The responsibility for fire prevention and fire protection for the entire site during the construction period should be clearly defined. The administrative responsibilities should be to develop, implement, and periodically update the internal program as necessary using the measures outlined in this recommended practice.

16.2.2 The responsibility for fire prevention and fire protection programs among various parties on site should be clearly delineated. The fire protection program that is to be followed and the owner's right to administration and enforcement should be established.

16.2.3 The fire prevention and fire protection program should include a Fire Protection Design Basis Document of the construction site and construction activities at any construction site. *(See Chapter 4.)*

16.2.4 Written procedures should be established for the new construction site, including major construction projects in existing plants. Such procedures should be in accordance with Sections 17.3 and 17.4, and 17.4.2, 17.4.4, and 17.4.5.

16.2.5 Security guard service, including recorded rounds, should be provided through all areas of construction during times when construction activity is not in progress. *(See NFPA 601.)*

16.2.5.1 The first round should be conducted one-half hour after the suspension of work for the day. Thereafter, rounds should be made every hour.

16.2.5.2 Where partial construction activities occur on second and third shifts, the guard service rounds are permitted to be modified to include only unattended or sparsely attended areas.

16.2.5.3 In areas where automatic fire detection or extinguishing systems are in service, with alarm annunciation at a constantly attended location, or in areas of limited combustible loading, rounds are permitted to be omitted after the first round indicated in 16.2.5.1.

16.2.6 Construction schedules should be coordinated so that planned permanent fire protection systems are installed and placed in service as soon as possible, at least prior to the introduction of any major fire hazards identified in Chapter 7.

16.2.7 In-service fire detection and fire extinguishing systems provide important protection for construction materials, storage, and so forth, even before the permanent hazard is present. Temporary fire protection systems can be warranted during certain construction phases. The need and type of protection should be determined by the individual responsible for fire prevention and fire protection.

16.2.8 Construction and installation of fire barriers and protective opening devices (i.e., fire doors, dampers) should be given priority in the construction schedule.

16.3 Site Clearing, Excavation, Tunneling, and Construction Equipment.

16.3.1 Site Clearing.

16.3.1.1 Prior to clearing forest and brush-covered areas, the owner should ensure that a written fire control plan is pre-

Copyright 2015 National Fire Protection Association (NFPA). Licensed, by agreement, for individual use and download on June 24, 2015 to LEADER AND READER for designated user PATTARAPORN SRITRAKOOL. No other reproduction or transmission in any form permitted without written permission of NFPA. For inquires or to report unauthorized use, contact licensing@nfpa.org.

pared and that fire-fighting tools and equipment are made available as recommended by NFPA 1143. Contact should be made with local fire and forest agencies for current data on restrictions and fire potential, and to arrange for necessary permits.

16.3.1.2 All construction vehicles and engine-driven portable equipment should be equipped with effective spark arresters. Vehicles equipped with catalytic converters should be prohibited from wooded and heavily vegetated areas.

16.3.1.3 Fire tools and equipment should be used for fire emergencies only and should be distinctly marked and maintained in a designated area.

16.3.1.4 Each site utility vehicle should be equipped with at least a portable fire extinguisher or backpack pump filled with 4 gal to 5 gal (15 L to 19 L) of water.

16.3.1.5 Cut trees, brush, and other combustible spoil should be disposed of promptly.

16.3.1.6 Where it is necessary to dispose of combustible waste by on-site burning, designated burning areas should be established with approval by the owner and should be in compliance with federal, state, and local regulations and guidelines. The contractor should coordinate burning with the agencies responsible for monitoring fire danger in the area and should obtain all appropriate permits prior to the start of work. *(See Section 16.2.)*

16.3.1.7 Local conditions can require the establishment of fire breaks by clearing or use of selective herbicides in areas adjacent to property lines and access roads.

16.3.2 Excavation and Tunneling.

16.3.2.1 Construction activities related to tunnels, shafts, and other underground excavations are strictly regulated by federal and state agencies. Fire prevention consists of adequate ventilation, good housekeeping, and limiting the types of fuel, explosives, and combustibles underground as well as adjacent to entrances and ventilation intakes. Inspections of site conditions and the testing of air quality should be assigned to qualified personnel specifically trained in the use of those instruments specified by the regulating agency.

16.3.2.2 Pre-excavation geologic surveys should include tests for carbonaceous or oil-bearing strata, peat, and other organic deposits that can be a source of combustible dusts or explosive gases.

16.3.2.3 The use of vehicles and equipment requiring gasoline, liquefied petroleum gas, and other fuels in excavations with limited air circulation should be restricted.

16.3.2.4 A general plan of action for use in times of emergency should be prepared for every underground excavation. *(See Section 1.2.)*

16.3.2.5 Construction Equipment. Construction equipment should meet the requirements of NFPA 120.

16.4 Construction Warehouses, Shops, and Offices.

16.4.1 All structures that are to be retained as part of the completed plant should be constructed of materials as indicated in Chapter 5 and should be in accordance with other recommendations for the completed plant.

16.4.2 Construction warehouses, offices, trailers, sheds, and other facilities for the storage of tools and materials should be located with consideration of their exposure to major plant buildings or other important structures. For guidance in separation and protection, see NFPA 80A and NFPA 1144.

16.4.3 Large central office facilities can be of substantial value and contain high-value computer equipment, irreplaceable construction records, or other valuable contents, the loss of which can result in significant construction delays. An analysis of fire potential should be performed. This analysis can indicate a need for automatic sprinkler systems or other protection, fire/smoke detection, subdividing the complex to limit values exposed by one fire, or a combination of the above.

16.4.4 Warehouses that contain high value equipment (as defined by the individual responsible for fire prevention and fire protection), or where the loss of or damage to contents would cause a delay in startup dates of the completed plant, should be arranged and protected as indicated in 16.4.4 through 16.4.10. Although some of these structures are considered to be "temporary" and will be removed upon completion of the plant, the fire and loss potential should be thoroughly evaluated and protection provided where warranted.

16.4.4.1 Building construction materials should be noncombustible or limited combustible. *(See Chapter 5.)*

16.4.4.2 Automatic sprinkler systems should be designed and installed in accordance with the applicable NFPA standards. Waterflow alarms should be provided and monitored at a constantly attended location as determined by the individual responsible for fire prevention and fire protection.

16.4.4.3 Air-supported structures sometimes are used to provide temporary warehousing space. Although the fabric envelope can be a fire-retardant material, the combustibility of contents and the values should be considered, as with any other type of warehouse. Because it is impractical to provide automatic sprinkler protection for them, air-supported structures should be used only for noncombustible storage. An additional factor to consider is that relatively minor fire damage to the fabric envelope can leave the contents exposed to the elements.

16.4.5 Temporary enclosures, including trailers, inside permanent plant buildings should be prohibited except where permitted by the individual responsible for fire prevention and fire protection. Where the floor area of a combustible enclosure exceeds 100 ft^2 (9.3 m^2) or where the occupancy presents a fire exposure, the enclosure should be protected with an approved automatic fire extinguishing system.

16.4.6 Storage of construction materials, equipment, or supplies that are either combustible or in combustible packaging should be prohibited in main plant buildings unless one of the following conditions applies:

(1) An approved automatic fire extinguishing system is in service in the storage area
(2) Where loss of the materials or loss to the surrounding plant area would be minimal, as determined by the individual responsible for fire prevention and fire protection

16.4.7 Construction camps comprised of mobile buildings adjoining each other to form one large fire area should be avoided. If buildings cannot be separated adequately , consideration should be given to installing fire walls between units or installing automatic sprinklers throughout the buildings.

Copyright 2015 National Fire Protection Association (NFPA). Licensed, by agreement, for individual use and download on June 24, 2015 to LEADER AND READER for designated user PATTARAPORN SRITRAKOOL. No other reproduction or transmission in any form permitted without written permission of NFPA. For inquires or to report unauthorized use, contact licensing@nfpa.org.

16.4.7.1 Mobile buildings should be installed and located according to the requirements of NFPA 501A. Insulating materials utilized in mobile buildings should be noncombustible.

16.4.7.2 Construction camp buildings should be designed and installed in accordance with NFPA *101*.

16.4.8 Fire alarms should be connected to a constantly attended central location. All premise fire alarm systems should be installed, tested, and maintained as outlined in *NFPA 72*. An alternative to remote alarms would be audible and visual alarms that would alert site/security personnel to abnormal conditions.

16.4.8.1 The location for central alarm control should be provided with the following:

(1) Remote fire pump start button
(2) Manual siren start/stop button
(3) Provision for alerting the fire crew by radio, fire alert paging, and so forth
(4) Monitors for communication between security guard and fire crew at place of fire
(5) Radio link between security guards' office and the respective fire department

16.4.9 The handling, storage, and dispensing of flammable liquids and gases should meet the requirements of NFPA 30, NFPA 58, and NFPA 30A.

16.4.10 Vehicle repair facilities should meet the requirements of NFPA 30A.

16.4.11 Construction kitchens should be protected in accordance with NFPA 96.

16.5 Construction Site Lay-Down Areas.

16.5.1 Fire hydrant systems with an adequate water supply should be provided in lay-down areas where the need is determined by the individual responsible for fire prevention and fire protection.

16.5.2 Combustible materials should be separated by a clear space to allow access for manual fire-fighting equipment *(see Section 16.8)*. Access should be provided and maintained to all fire-fighting equipment including fire hose, extinguishers, and hydrants.

16.6 Temporary Construction Materials.

16.6.1 Noncombustible or fire-retardant scaffolds, form work, decking, and partitions should be used both inside and outside of permanent buildings where a fire could cause substantial damage or delay construction schedules. Consideration should be given to providing sprinkler protection for combustible form work where a fire could cause substantial damage or construction delays.

16.6.1.1 The use of noncombustible or fire-retardant concrete form work is especially important for large structures (e.g., turbine-generator pedestal) where large quantities of forms are used.

16.6.1.2 The use of listed pressure-impregnated fire-retardant lumber or listed fire-retardant coatings generally would be acceptable. Pressure-impregnated fire-retardant lumber should be used in accordance with its listing and manufacturer's instructions. Where exposed to the weather or moisture (e.g., concrete forms), the fire retardant used should be suitable for this exposure. Fire-retardant coatings are not acceptable on walking surfaces or surfaces subject to mechanical damage.

16.6.2 Tarpaulins and plastic films should be of listed weather-resistant materials and meet the performance criteria of NFPA 701.

16.7 Underground Mains, Hydrants, and Water Supplies.

16.7.1 General.

16.7.1.1 Where practical, the permanent underground yard system, fire hydrants, and water supply (at least one water source), as indicated in Chapter 6, should be installed during the early stages of construction. Where provision of all or part of the permanent underground system and water supply is not practical, temporary systems should be provided. Temporary water supplies should be hydrostatically tested, flushed, and arranged to maintain a high degree of reliability, including protection from freezing and loss of power. If there is a possibility that the temporary system will be used for the life of the plant, then the temporary system should meet the requirements indicated in Chapter 6.

16.7.1.2 The necessary reliability of construction water supplies, including redundant pumps, arrangement of power supplies, and use of combination service water and construction fire protection water, should be determined by the individual responsible for fire prevention and fire protection.

16.7.2 Hydrants should be installed, as indicated in Chapter 6, in the vicinity of main plant buildings, important warehouses, office or storage trailer complexes, and important outside structures with combustible construction or combustible concrete form work (e.g., cooling towers). Where practical, the underground main should be arranged to minimize the possibility that any one break will remove from service any fixed water extinguishing system or leave any area without accessible hydrant protection.

16.7.3* A fire protection water supply should be provided on the construction site and should be capable of furnishing the largest of the following for a minimum 2-hour duration:

(1) 750 gpm (2839 L/min)
(2) The in-service fixed water extinguishing system with the highest water demand and 500 gpm (1893 L/min) for hose streams

16.7.3.1 The highest water demand should be determined by the hazards present at the stage of construction, which might not correspond to the highest water demand of the completed plant.

16.7.3.2 Fixed systems should be provided as soon as construction allows, and placed in service, even when the available construction phase fire protection water supply is not adequate to meet the system design demand. The extinguishing system will at least provide some degree of protection, especially where the full hazard is not yet present. However, when the permanent hazard is introduced, the water supply should be capable of providing the designed system demand. When using construction water in permanent systems, adequate strainers should be provided to prevent clogging of the system by foreign objects and dirt.

16.7.3.3 The water supply should be sufficient to provide adequate pressure for hose connections at the highest elevation.

16.8 Manual Fire-Fighting Equipment.

16.8.1* First aid fire-fighting equipment should be provided, in accordance with NFPA 600 and NFPA 241.

Copyright 2015 National Fire Protection Association (NFPA). Licensed, by agreement, for individual use and download on June 24, 2015 to LEADER AND READER for designated user PATTARAPORN SRITRAKOOL. No other reproduction or transmission in any form permitted without written permission of NFPA. For inquires or to report unauthorized use, contact licensing@nfpa.org.

16.8.2 Portable fire extinguishers of suitable capacity should be provided in accordance with NFPA 10 as follows:

(1) Where flammable liquids are stored or handled
(2) Where combustible materials are stored
(3) Where temporary oil- or gas-fired equipment is used
(4) Where a tar or asphalt kettle is used
(5) Where welding, grinding, or open flames are in use

16.8.3 Hoses and nozzles should be available at strategic locations, such as inside hose cabinets or hose houses or on dedicated fire response vehicles.

16.8.4 If fire hose connections are not compatible with local fire-fighting equipment, adapters should be made available.

Chapter 17 Fire Risk Control Program

17.1 General.

17.1.1 This chapter provides recommended criteria for the development of a fire risk control program that contains administrative procedures and controls necessary for the execution of the fire prevention and fire protection activities and practices for electric generating plants and high voltage direct current converter stations.

17.1.2 The fire risk control program recommended in this chapter should be reviewed and updated periodically.

17.1.3 The intent of this chapter can be met by incorporating the features of this chapter in the plant's operating procedures or otherwise as determined by plant management.

17.2 Management Policy and Direction.

17.2.1 Corporate management should establish a policy and institute a comprehensive fire risk control program to promote the conservation of property, continuity of operations, and protection of safety to life by adequate fire prevention and fire protection measures at each facility.

17.2.2 Proper preventive maintenance of operating equipment and adequate operator training are critical aspects of an effective fire prevention program. See Annex D for examples of operator errors causing significant property loss.

17.3 Fire Risk Control Program. A written plant fire prevention program should be established and at a minimum should include the following:

(1) Fire safety information for all employees and contractors. This information should include, at a minimum, familiarization with fire prevention procedures, plant emergency alarms and procedures, and how to report a fire. This should be included in employee/contractor orientation.
(2) Documented, regularly scheduled plant inspections including provisions for handling remedial actions to correct conditions that increase fire hazards.
(3) A description of general housekeeping practices and the control of transient combustibles. Fire experience has shown that transient combustibles can be a significant factor during a fire situation, especially during outages.
(4) Control of flammable and combustible liquids and gases in accordance with appropriate NFPA standards.
(5) Combustible dust, as applicable, in accordance with NFPA 654.
(6) Control of ignition sources including smoking, grinding, welding, and cutting. *(See NFPA 51B.)*
(7) Fire prevention surveillance. *(See NFPA 601.)*
(8) A fire report, including an investigation and a statement on the corrective action to be taken *(see Annex B).*
(9) Fire hazards of materials located in the plant or storage areas identified in accordance with NFPA 704 and applicable material safety data sheets (MSDS).

17.4 Fire Protection Program.

17.4.1 Testing, Inspection, and Maintenance.

17.4.1.1 Upon installation, all fire protection systems should be preoperationally inspected and tested in accordance with applicable NFPA standards. Where appropriate standards do not exist, inspection and test procedures outlined in the purchase and design specifications should be followed.

17.4.1.2* All fire protection systems and equipment should be periodically inspected, tested, and maintained in accordance with applicable *National Fire Codes. (See Table 17.4.1.2 for guidance.)*

Table 17.4.1.2 Reference Guide for Fire Equipment Inspection, Testing, and Maintenance

Item	NFPA Document No.
Supervisory and fire alarm circuits	72
Fire detectors	72
Manual fire alarms	72
Sprinkler water flow alarms	25/72
Sprinkler and water spray systems	25/72
Foam systems	11/16/25
Halogenated agent, chemical and CO_2 systems	12/12A/17/2001
Fire pumps and booster pumps	25/72
Water tanks and alarms	25/72
P.I.V.s and O.S. & Y. valves	25/72
Fire hydrants and associated valves	13/24
Fire hose and standpipes and hose nozzles	1962/25
Portable fire extinguishers	10
Fire brigade equipment	1971
Fire doors and dampers	80/90A
Smoke vents	204
Emergency lighting	110
Radio communication equipment	1221
Audible and visual signals	72
Water mist fire protection systems	750

17.4.1.3 Testing, inspection, and maintenance should be documented with written procedures, results, and followup corrective actions recorded and tracked for closure.

17.4.2 Impairments.

17.4.2.1 A written procedure should be established to address impairments to fire protection systems and other plant systems that impact the level of fire hazard (e.g., dust collec-

Copyright 2015 National Fire Protection Association (NFPA). Licensed, by agreement, for individual use and download on June 24, 2015 to LEADER AND READER for designated user PATTARAPORN SRITRAKOOL. No other reproduction or transmission in any form permitted without written permission of NFPA. For inquires or to report unauthorized use, contact licensing@nfpa.org.

tion systems, HVAC systems). As a minimum this procedure should address the following:

(1) Identify equipment not available for service
(2) Identify personnel to be notified (e.g., plant fire brigade leader, public fire department, plant fire protection coordinator, control room operator)
(3) Increase fire surveillance as needed *[see 17.3(6)]*
(4) Provide additional protected measures as necessary (e.g., temporary water supplies, additional hose)

17.4.2.2 Impairment to fire protection systems should be as short in duration as practical. If the impairment is planned, all necessary parts and manpower should be assembled prior to removing the protection system(s) from service. When an impairment is not planned, or when a system has discharged, the repair work or system restoration should be expedited.

17.4.2.3 Proper reinstallation after maintenance or repair should be performed to ensure proper systems operation. Once repairs are complete, tests that will ensure proper operation and restoration of full fire protection equipment capabilities should be made. Following restoration to service, the parties previously notified of the impairment should be advised. The latest revision of the design documents reflecting as-built conditions should be available to ensure that the system is properly reinstalled (e.g., drawings showing angles of nozzles).

17.4.3 Management of Change. A system should be implemented that would ensure that the appropriate individual(s) with fire protection responsibility are made aware of new constructions, modifications to existing structures, changes to operating conditions, or other action that could impact the fire protection of the plant. The Fire Protection Design Basis Document Document and the appropriate procedures and programs discussed in this chapter might need to be revised to reflect the impact of this action.

17.4.4* Fire Emergency Plan. A written fire emergency plan should be developed, and, as a minimum, this plan should include the following:

(1) Response to fire alarms and fire systems supervisory alarms
(2) Notification of personnel identified in the plan
(3) Evacuation of employees not directly involved in fire-fighting activities from the fire area
(4) Coordination with security forces or other designated personnel to admit public fire department and control traffic and personnel
(5) Fire preplanning that defines fire extinguishment activities
(6) Periodic drills to verify viability of the plan
(7) Control room operator(s) and auxiliary operator(s) activities during fire emergencies

17.4.5 Emergency Response Personnel.

17.4.5.1 The size of the plant and its staff, the complexity of fire fighting problems, and the availability of a public fire department should determine the requirements for emergency response personnel or fire brigade.

17.4.5.2 An emergency response team can be provided to facilitate response to emergencies such as fire. Activities can include incident command, incipient fire-fighting, escorting fire department personnel, first aid, HazMat First Responder duties, et cetera. The organization and responsibilities should be clearly identified.

17.4.5.3* If a fire brigade is provided, its organization and training should be identified in written procedures. NFPA 600 and OSHA standard 29 CFR 1910.156, "Fire Brigades," should be consulted for determining operation limitations.

17.4.6 Special Fire-Fighting Conditions. Electric generating plants present unique fire-fighting challenges. This information might be useful in fire preplanning. It could also be utilized in the education and training of both on-site and off-site fire-fighting personnel who would respond in the event of a fire emergency.

17.4.6.1 Turbine Lubricating Oil Fires. A critical aspect of responding to turbine lubricating oil fires is minimizing the size and duration of the oil spill. The need for lubrication to protect the turbine-generator bearings and shaft should be balanced against the fire damage from allowing the oil leak to continue. The following steps can be useful in minimizing fire damage and should be considered during preplanning and training for emergency conditions:

(1) Tripping the turbine
(2) Breaking condenser vacuum
(3) Emergency purging of the generator
(4) Shut down main and backup oil pumps

Shutting down oil pumps can cause additional mechanical damage to the turbine depending on rotating speed. However, it can be effective in mitigating the overall damage due to fire. *(See Annex D.)* When ac oil pumps are shut down, dc or backup pumps will start on low pressure. The dc or backup oil pumps will also have to be secured, which usually requires more than operating a switch.

17.4.6.2 Regenerative Air Heaters. Since laboratory tests and reported incidents indicated a rapid increase in temperature to the 2800°F–3000°F (1537°C–1648°C) range in an air preheater fire, great care should be given to manual fire fighting. Large amounts of water will be needed to cool and extinguish a preheater fire. Fire preplanning should be accomplished to ensure use of an adequate number of access doors and safe access to the doors.

17.4.6.3 Electrostatic Precipitators. Once a fire is detected, the unit should go into emergency shutdown immediately. It should be recognized that during operation the atmosphere in the precipitator is oxygen-deficient and opening doors or running system fans following a fuel trip could cause conditions to worsen (increased potential for backdraft explosion). Once the flow of air and fuel to the fire has been stopped and the electrostatic precipitator has been shut down and de-energized, the precipitator doors can be permitted to be opened and water hoses employed if necessary.

17.4.6.4 Cable Trays. Cable tray fires should be handled like any fire involving energized electrical equipment. It might not be practical or desirable to de-energize the cables involved in the fire. Water is the most effective extinguishing agent for cable insulation fires but should be applied with an electrically safe nozzle. Some cables [polyvinyl chloride (PVC), neoprene, or Hypalon] can produce dense smoke in a very short time. In addition, PVC liberates hydrogen chloride (HCl) gas. Self-contained breathing apparatus should be used by personnel attempting to extinguish cable tray fires.

17.4.6.5 Hydrogen System. Hydrogen has a relatively large flammability range (4 to 75 percent by volume) in air. The

Copyright 2015 National Fire Protection Association (NFPA). Licensed, by agreement, for individual use and download on June 24, 2015 to LEADER AND READER for designated user PATTARAPORN SRITRAKOOL. No other reproduction or transmission in any form permitted without written permission of NFPA. For inquires or to report unauthorized use, contact licensing@nfpa.org.

explosive range (for deflagrations and detonations) is narrower than the flammability range, but hydrogen explosions can occur inside turbine halls in the event of accidental release and delayed ignition. Under most conditions, it is safer to allow a hydrogen fire to burn in a controlled manner until such time as the gas source can be shut off. Extinguishing the fire while gas is still escaping could allow an explosive mixture to be generated. The Fire Protection Design Basis Document should include provisions so that hydrogen supplies can be shut off from a readily accessible location outside the fire area if called for in an emergency situation.

17.4.6.6 Coal Storage and Handling.

17.4.6.6.1 Once the location and extent of a fire in a coal storage pile have been determined, the coal should be dug out and the heated coal removed. Since moisture accelerates oxidation, water used for fire fighting can aggravate the situation if the seat of the fire is not reached. Water additives should be considered, to break the water tension and improve penetration.

17.4.6.6.2 Clearly marked access panels in equipment should be provided for manual fire fighting. Coal dust presents both a fire and explosion hazard. Combustible, finely divided material is easily ignited. However, there is a possibility that a deep-seated hard-to-extinguish fire can occur. Application of an extinguishing agent that disturbs coal dust deposits could result in a dust explosion.

17.4.6.7 Coal Pulverizers. *(See 9.5.4 of NFPA 85.)* Additional information can be obtained from published manufacturer's instructions.

17.5 Identification of Fire Hazards of Materials. Materials located in the plant or storage areas should be identified in accordance with NFPA 704 and the applicable MSDS.

Annex A Explanatory Material

Annex A is not a part of the recommendations of this NFPA document but is included for informational purposes only. This annex contains explanatory material, numbered to correspond with the applicable text paragraphs.

A.3.2.1 Approved. The National Fire Protection Association does not approve, inspect, or certify any installations, procedures, equipment, or materials; nor does it approve or evaluate testing laboratories. In determining the acceptability of installations, procedures, equipment, or materials, the authority having jurisdiction may base acceptance on compliance with NFPA or other appropriate standards. In the absence of such standards, said authority may require evidence of proper installation, procedure, or use. The authority having jurisdiction may also refer to the listings or labeling practices of an organization that is concerned with product evaluations and is thus in a position to determine compliance with appropriate standards for the current production of listed items.

A.3.2.2 Authority Having Jurisdiction (AHJ). The phrase "authority having jurisdiction," or its acronym AHJ, is used in NFPA documents in a broad manner, since jurisdictions and approval agencies vary, as do their responsibilities. Where public safety is primary, the authority having jurisdiction may be a federal, state, local, or other regional department or individual such as a fire chief; fire marshal; chief of a fire prevention bureau, labor department, or health department; building official; electrical inspector; or others having statutory authority. For insurance purposes, an insurance inspection department, rating bureau, or other insurance company representative may be the authority having jurisdiction. In many circumstances, the property owner or his or her designated agent assumes the role of the authority having jurisdiction; at government installations, the commanding officer or departmental official may be the authority having jurisdiction.

A.3.2.4 Listed. The means for identifying listed equipment may vary for each organization concerned with product evaluation; some organizations do not recognize equipment as listed unless it is also labeled. The authority having jurisdiction should utilize the system employed by the listing organization to identify a listed product.

A.5.1.1.3 Where the control room and computer room are separated by a common wall, the wall need not have a fire resistance rating.

A.5.1.2.1 Listed penetration seals for large diameter piping might not be commercially available. In such instances the design should be similar to listed configurations.

Listed penetration seals for the internals of non-segregated phase bus ducts and isolated phase bus ducts can be excluded.

A.5.1.4.2(9) Oil-filled transformer explosions and fires can be prevented in some cases by the installation of a passive mechanical system designed to depressurize the transformer a few milliseconds after the occurrence of an electrical fault. This fast depressurization can be achieved by a quick oil evacuation triggered by the dynamic pressure peak generated by the short circuit. The protection technology activates within milliseconds before static pressure increases, therefore preventing transformer explosion and subsequent fire. However, since these devices do not eliminate a fire potential resulting from all forms of transformer failure (e.g., transformer bushing failure), they should be considered as a possible supplement to passive protection features such as physical barriers or spatial separation, not as an alternative to these features.

A.5.1.4.3 As a minimum, the firewall should extend at least 1 ft (0.31 m) above the top of the transformer casing and oil conservator tank and at least the width of the transformer oil containment. If columns supporting the turbine building roof at the exterior wall have a 2-hour fire-resistive rating above the operating floor, the firewall need not be higher than required to obtain line-of-sight protection to the height of the operating floor.

A.5.1.4.5 A higher noncombustible shield can be permitted to be provided to protect against the effects of an exploding transformer bushing.

A.5.1.5.2 Where multiple transformers of less than 100 gal (379 L) capacity each are located within close proximity, additional fire protection can be required based on the Fire Protection Design Basis Document.

A.5.2.2 It generally is recognized that boiler and turbine buildings, protected in accordance with this document, meet the intent of NFPA *101* for additional travel distances for fully sprinklered facilities.

NFPA *101* allows additional means of egress components for special-purpose industrial occupancies. These areas can be permitted to be provided with fixed industrial stairs, fixed ladders *(see ANSI A1264.1, Safety Requirements for Workplace Floor and Well Openings, Stairs, and Railing Systems, and ANSI A14.3, Stan-*

Copyright 2015 National Fire Protection Association (NFPA). Licensed, by agreement, for individual use and download on June 24, 2015 to LEADER AND READER for designated user PATTARAPORN SRITRAKOOL. No other reproduction or transmission in any form permitted without written permission of NFPA. For inquires or to report unauthorized use, contact licensing@nfpa.org.

dard for Safety Requirements for Fixed Ladders), or alternating tread devices *(see NFPA 101).* Examples of these spaces include catwalks, floor areas, or elevated platforms that are provided for maintenance and inspection of in-place equipment.

Spaces internal to equipment and machinery are excluded from the requirements of NFPA *101.* Examples of these spaces include, but are not limited to, the internals of the following:

(1) Boilers
(2) Scrubbers
(3) Pulverizers
(4) Combustion turbine enclosures
(5) Cooling towers
(6) Bunkers, silos, and hoppers
(7) Conveyor pulley take-up areas
(8) Electrostatic precipitators

Examples of these spaces within hydroelectric plants include the following:

(1) Turbine scroll cases
(2) Generators
(3) Access tunnels for dam inspections
(4) Entry into draft tubes
(5) Penstocks

A.5.4.1.3.2 Where a separate smoke management system is provided, it should be designed for areas that could be damaged indirectly in the event of a fire through either of the following two scenarios:

(1) Exposure to smoke from a fire originating within the rooms themselves
(2) Exposure to smoke in one room from a fire originating in the other room

A smoke management system (ventilation) should be designed to minimize the penetration of smoke into electrical equipment.

A.5.5.1 For hydroelectric plants, draining the space above the turbine head cover by gravity might not be possible. Both ac and dc drainage pumps discharging into piping leading to the station sump are often provided with suctions in the well where the shaft first extends above the gland seal. In addition, gravity drainage might be impossible from some of the enclosed volumes of bulb units. In such cases, accumulated liquids from oil spills and from fire suppression should be pumped to sumps or to other containment volumes.

A.5.5.2 Design discharge for the turbine building should be based on the expected time necessary to take the turbine off line and put it on turning gear, but not less than 10 minutes. The provisions are for drainage and any associated drainable facilities (pits, sumps, drains to downstream surge chamber and/or tail tunnels or tailrace, and sump pumps) for underground power plants.

A.6.2.1 While the use of fire protection systems can be an effective way of cleaning, it is strongly discouraged. The water supply for this non–fire protection activity should be supplied from a separate service water system. Where this separate supply is not available, special considerations should be made prior to using fire protection water for this non–fire demand, including separate pumps.

Operational procedures should be in place to prevent depletion of the dedicated fire protection water supply by incidental water usage for non–fire protection purposes. Procedures should terminate all incidental water usage for non–fire protection purposes upon receipt of a fire alarm.

A.6.2.2 A single water source could be designed to provide an acceptable level of reliability for the fire protection system(s). As an example, a single reliable water source could supply the fire pump(s). The need for multiple or a secondary water source is dependent on several factors and a detailed analysis of the facility, and the level of reliability needed should be part of the Fire Protection Design Basis Document.

The detailed analysis of the water supply reliability needed should include, but not be limited to, the following:

(1) Reliability of source — under normal circumstances, not including a regional event, the water source is expected to operate as designed.
(2) Capacity of source — meets all requirements pertinent to the applicable codes and standards for fixed fire protection and manual fire-fighting.
(3) Reliance on water-based fire protection systems — if the facility relies completely on water-based fixed protection systems, then the water supply reliability is paramount to the success of the overall fire protection system design. A single, credible impairment should not eliminate the water supply from the fire protection system.
(4) Availability of alternate and back-up sources — additional water sources such as connections to the public water supply, cooling tower basins, service water tanks, on-site reservoirs or ponds available for fire department pumper suction — should be available.
(5) Consequences of a loss, in terms of property and generation — this can include the size of a facility from a values standpoint (values at risk) or amount of generation at risk in an owner's generation scheme.

A.6.2.2.1 Hydroelectric, wind, and solar generating plants are commonly located in remote areas and require special consideration with respect to water supplies and their usefulness as follows:

(1) Hydroelectric plants are typically located adjacent to rivers or at the base of lakes. Fire protection water supplies can be permitted to be limited to the water from the river, lake, reservoir, or private tank(s). Consideration should be given to the special problems for this type of water supply (i.e., freezing, low flow, heavy sediment) associated with requirements for the fire protection systems, equipment, and installation.
(2) Upstream water is frequently the fire protection water supply for hydroelectric facilities. Water for fire suppression should not be taken downstream from any closure device in a penstock, flume, or forebay.

A.6.7.3(2) Special consideration should be given to alerting personnel in remote spaces, such as in scroll/spiral cases or draft tubes.

A.7.2.1 NFPA 54 provides guidance for the design, installation, and testing of applications operating at pressures less than gauge pressure of 125 psi and should be considered a good reference for these types of applications in power generating facilities (for example: hot water heaters, space heaters, cooking applications, auxiliary boilers, and emergency generators). NFPA 54 specifically excludes piping in electric utility power plants that supplies gas utilized directly as the fuel to generate electricity. These systems typically operate at pressures greater than gauge pressure of 125 psi, which are covered by NFPA 56.

A.7.2.4 It is recommended that oxidants such as air within a flammable gas system be diluted by a nonreactive (inert) gas

Copyright 2015 National Fire Protection Association (NFPA). Licensed, by agreement, for individual use and download on June 24, 2015 to LEADER AND READER for designated user PATTARAPORN SRITRAKOOL. No other reproduction or transmission in any form permitted without written permission of NFPA. For inquires or to report unauthorized use, contact licensing@nfpa.org.

such as nitrogen, carbon dioxide, or argon to low concentrations so that when a flammable gas is introduced, an ignitable mixture is not created within the system. This is known as *purging into service*. The reverse is also true: dilute the fuel before adding air, which is known as *purging out of service*.

Flammability ranges for various fuels are noted as part of Table 4.4.2 of NFPA 497. While this table addresses fire hazards, if the nonreactive gas is an asphyxiant, proper cautions are to be followed. Chapters 7 and 8 of NFPA 56 outline best practices for purging into service and purging out of service, respectively, to include the best practice for discharging the contents of the system during the purging operations.

Other considerations such as activity planning and risk assessment are provided in Chapter 4 of NFPA 56. Additionally, consideration must be given to any toxic hazards associated with the flammable gas (e.g., flammable gas mixtures that contain toxic constituents such as carbon monoxide or hydrogen sulfide). NFPA 55 contains guidance for how to handle these situations.

A.7.2.5 Maintenance, modification, and repair of fuel gas piping should be performed using written procedures developed with full recognition of the hazards involved in the intended operation. Chapter 4 of NFPA 56 provides an outline of considerations to include in assessing the risks associated with flammable gas piping when planning for maintenance modification or repair. Chapters 7 and 8 of NFPA 56 provide specific guidance for the actual removal or induction of flammable gas. NFPA 55 provides additional guidance for gases that have toxic constituents.

A.7.4.1.1 The Powder River Basin (PRB) of Montana and Wyoming has the largest reserves of low-sulfur coal in the United States (76 percent). Coal from PRB is sub-bituminous coal, which has gained popularity as an alternative to expensive scrubbers required to meet emissions standards when burning high-sulfur coal. Sub-bituminous coal has one-half to one-sixth the sulfur content of most other coals.

Sub-bituminous coal presents fire protection challenges due to spontaneous heating characteristics. Also, sub-bituminous coal is extremely friable, which contributes to higher levels of dusting and spillage. Housekeeping, preplanning, coal handling equipment design, and fire protection system design are integral components to minimizing the risks associated with a sub-bituminous coal fire. Table A.7.4.1.1 is a representative, proximate analysis of sub-bituminous coals.

Table A.7.4.1.1 Proximate Analysis of Sub-Bituminous Coals

Fixed carbon, %	32.06–40.00
Volatile matter, %	27.70–32.66
Moisture, %	23.80–31.80
Ash, %	3.80–8.45
Sodium as a percentage of ash, %	0.32–7.50
Sulfur, %	0.20–0.80
Btu/lb	8050–9500
Size	Nominal 2 in. × 0 in.
Ash fusion temperature/reducing atmosphere:	
Initial,°F	2050–2268
Initial,°C	1121–1242
Fluid,°F	2142–2348
Fluid,°C	1172–1287

Source: Guide to Coal Mines, Burlington Northern and Santa Fe Railway, courtesy PRB Coal Users' Group.

A.7.4.2.1 *Spontaneous Heating.* The chemical properties of coals that effect spontaneous combustion are oxygen content, moisture, impurities (especially sulfur in the form of pyrites), and volatiles. The physical properties are particle size and friability.

Spontaneous heating occurs due to oxidation of freshly exposed coal surfaces. For spontaneous heating to lead to ignition, sufficient air must be present and in contact with fresh (unoxidized) surfaces, yet without sufficient air movement to dissipate heat generated by oxidation. The oxidation rate of coal at ambient temperatures is determined by its rank, its exposed surface area, and the percentage of free oxygen in the atmosphere permeating the coal. Coal of low rank (soft coal) will have a higher oxidation rate than harder coal under the same conditions. Likewise, if coal is crushed to a finer particle size, more surface area will be exposed and the oxidation rate will increase. A reduction in free oxygen content in the atmosphere permeating the coal reduces the rate of oxidation (almost proportionately). Oxidation will continue at a reduced rate until the free oxygen is exhausted. Heat produced by spontaneous combustion will be absorbed by the coal, resulting in an increase in coal temperature. Due to the chimney effect, air infiltration leakage might be expected around the discharge valve or other bottom leaks of silos and bunkers or in the top 5 ft to 6 ft (1.5 m to 1.8 m) of the coal in the bunker. Therefore "hot spots" will tend to develop in the lower and upper portions of the coal in the silo and near any seams or openings that allow air infiltration. Inerting the coal with carbon dioxide or nitrogen and covering the top of the bunker to prevent air to cause spontaneous ignition is a common practice for forced and extended outage with coal in the bunker. As the coal temperature increases, the rate of oxidation will also increase. Due to the range and number of variables it is difficult to define the time to ignition of coal in storage.

Spontaneous heating can be mitigated by minimizing wetting of the coal, the duration of storage of the coal, and air movement in the silo.

Various designs can be used for piercing rod access ports for delivery of fire-fighting agents with water. A minimum 4 in. (10.16 cm) diameter access port is recommended to facilitate insertion of the piercing rod. One such design is a 4 in. (10.16 cm) flanged connection with a blind flange. The interior of the access port should be filled with expanded foam (flush with the interior silo surface) to prevent coal from collecting in the access port. When use of a given access port is required, the foam is removed from the outside to allow insertion of the piercing rod. Platform space should be provided at access port locations as required to assemble the piercing rod in 5 ft (1.5 m) sections and to operate the hand line and eductor equipment.

A.7.4.2.2 *Silo Construction.* If the plant is designed to burn a type of coal that is considered prone to spontaneous combustion or one that has a high percentage of "volatiles," silos should be cylindrical with conical hoppers. The coal's angle of repose should be considered when designing the internal slope of the silo and hopper so that coal will flow freely (normally 60 degrees from the horizontal will be sufficient) to avoid arching and voiding. Air cannons located at the throat of the silo can be used to ensure that coal continues to flow. However, caution is necessary to ensure that air cannons are not utilized during a fire or where low coal levels could result in suspended coal dust entering the explosive range.

Copyright 2015 National Fire Protection Association (NFPA). Licensed, by agreement, for individual use and download on June 24, 2015 to LEADER AND READER for designated user PATTARAPORN SRITRAKOOL. No other reproduction or transmission in any form permitted without written permission of NFPA. For inquires or to report unauthorized use, contact licensing@nfpa.org.

Experience indicates that low-sulfur Powder River Basin (PRB) coal is highly susceptible to spontaneous heating. For other coal types, experience indicates that coal volatility content above 38 percent might be conducive to spontaneous heating. The designer might consider inerting the silo if the volatiles content of the coal exceeds 38 percent or if PRB coal is used. Where the coal used has known spontaneous heating problems, special conveyors and chutes or pans can be provided to unload silos during forced outages.

A.7.4.2.3 *Silo Operations and Maintenance.* Where possible, coal silos should be operated at full capacity and coal should flow continuously. When silos are not operated at or near full volume, spontaneous combustion can occur at an increased rate.

Dependent on bin, bunker, or silo construction, the internal space might allow the build-up of coal on its walls. Removing the coal from the bin, bunker, or silo wall can be employed to minimize the risk of spontaneous combustion of the trapped coal.

During planned maintenance outages, silos should be emptied and thoroughly cleaned of coal deposits. Operating procedures should ensure that magnetic separators are in service when coal is being conveyed into the silo, to avoid introducing tramp metals. Movement of tramp metal within the silo can result in an ignition source by striking metal parts, causing sparks that might ignite coal dust.

Three fires involving coal silos at one operating electric generating station occurred at or near cracks in the bottom cone of the silo. During maintenance outages the cones should be thoroughly inspected for cracks.

A.7.4.2.4 These conditions should be monitored periodically. Monitoring can be performed at the top of the silo to monitor methane gas and carbon monoxide concentrations.

Flammable gas monitors should be arranged to alert plant operators if methane concentrations are detected or exceed 25 percent of the LEL.

Increased carbon monoxide levels can give an early indication of a hot spot or silo fire. Some experience in this area indicates that the carbon monoxide levels could rise days before fires are detected by other means. Acceptable carbon monoxide levels should be determined by plant personnel based on trends for various normal operating modes. Daily carbon monoxide samples should be taken at the top of each silo to establish a benchmark carbon monoxide level. Silos should be run empty and inspected if the carbon monoxide levels exceed twice the benchmark concentration.

Portable infrared heat detection or thermography has proven useful in locating hot spots. Typical hot spots are easily detected when they are in the size range of 2 ft (0.6 m) in diameter. Hot spots in the center and higher up might not be found until the hot spot enters the cone area as the coal level drops. Thermocouples can also be inserted to detect temperature increase due to spontaneous combustion. A long thermocouple [i.e., 10 ft (3 m)] connected to a portable instantaneous readout monitor can be employed. Pushing the thermocouple into the coal storage can detect developing hot areas or strata at different depths. Periodic monitoring of temperature change in these areas will help predict spontaneous combustion development and aid in response preplanning.

A.7.4.2.6 All signs of spontaneous combustion and fire must be eliminated prior to the movement of coal.

Manual Fire Suppression. Fire fighting in coal silos is a long and difficult activity. Some fire-fighting operations have taken several days to completely extinguish a fire.

Smoldering coal in a coal bin, bunker, or silo is a potentially dangerous situation that depends on the location of the smoldering coal. There is a risk of a flash fire or explosion if the smoldering coal is disturbed. This risk should be considered in preplanning. Personnel responding to a coal fire should have proper personal protective equipment, including SCBA and turnout gear, and training in this hazard.

The area surrounding the smoldering coal should also be considered. The potential of developing an immediately dangerous to life and health (IDLH) atmosphere is possible. This should also be considered in preplanning.

Depending on the strategy selected, resource demands will be varied but challenging. Prefire planning is an important element in successful silo fire control and should be included in the Fire Protection Design Basis Document *(see Chapter 4)* and the fire emergency plan *(see 17.4.4)*. Control room operators should be involved with the preplanning.

Use of Water Additives. Use of water additives has been successful in recent years, especially for sub-bituminous coal fires. Application of water additives is the preferred fire suppression method of the PRB Coal Users' Group for bunker, hopper, and silo fire protection *(see the PRB Coal Users' Group Recommended Practice, Coal Bunker, Hopper & Silo Fire Protection Guidelines)*.

Baseline guides and procedures for preplanning and applying water additives to these fires are included in the PRB Coal Users' Group document. These guides and procedures can be used as a starting point by the owner's structural fire brigade and local fire department to customize the approach for the specific facility. These fire-fighting activities are inherently dangerous and should not be performed by incipient fire brigades or other personnel. The document is available to members of the PRB Coal Users' Group online at www.prbcoals.com.

The application of water additives can be enhanced by using an infrared camera to search for hot spots, either on the sides or top of the silo, to facilitate injection as close as possible to the fire area. The infrared imagery can be used to evaluate performance and monitor progress of the attack. The solution must penetrate to the seat of combustion to be effective. This penetration can be affected by the degree of compaction, voids, rate of application, evaporation rate, and so forth. Runoff must be drained through feeder pipe and will require collection, cleanup, and disposal.

Use of Class A Foams and Penetrants. Use of Class A foams and penetrants has had some success, but it has been difficult to predict the resources required for successful fire control. The agents generally require mixing with water prior to application, usually in the range of 1 percent by volume, mixed in a manner similar to Class B agents. While the typical application of Class A foam is to fight wildland fires at 1 percent, many plants have reported success with using Class A foams at 0.1 percent. This causes the agent to act as a surfactant. Higher proportions have caused excessive bubble accumulation that impedes penetration into the coal.

The application of foams and penetrants can be enhanced by using an infrared camera to search for hot spots, either on the sides or top of the silo, to facilitate injection of the agent as close as possible to the fire area. The infrared imagery can be used to evaluate performance and monitor progress of the

Copyright 2015 National Fire Protection Association (NFPA). Licensed, by agreement, for individual use and download on June 24, 2015 to LEADER AND READER for designated user PATTARAPORN SRITRAKOOL. No other reproduction or transmission in any form permitted without written permission of NFPA. For inquires or to report unauthorized use, contact licensing@nfpa.org.

attack. The water/agent solution must penetrate to the seat of combustion to be effective. This penetration can be affected by the degree of compaction, voids, rate of application, evaporation rate, and so forth. Runoff must be drained through feeder pipe and will require collection, cleanup, and disposal.

Use of Inerting Gas. Carbon dioxide and nitrogen have been used successfully as gaseous inerting systems. Carbon dioxide vapor, with a density of 1.5 times that of air, has proven to be effective in quickly establishing an inert atmosphere in the space above the coal, which prevents the creation of an explosive atmosphere in that space.

At the same time the CO_2 vapor can be injected into the stored coal from the lower part of the silo, where fires are most likely to originate. This CO_2 inerts the voids between the coal pieces while filling the silo from the bottom up with CO_2 vapor. The CO_2 vapor injection rate is that needed to exceed any losses at the bottom of the silo while pushing the inert gas up through the coal at a reasonable rate. (Very tall silos require intermediate injection points for the CO_2 vapor between the top and bottom of the silo.)

Since carbon dioxide is stored as a compressed liquified gas, it must be vaporized before injection into the silo. External vaporizers are used and sized to handle the maximum anticipated CO_2 vapor flow rates.

It is common practice to monitor the carbon monoxide (CO) level while inerting with CO_2. If the CO level does not decrease, the controls on the CO_2 system are designed to allow for increasing the inerting rate. The flow can also be reduced to conserve the CO_2 supply once fire control has been established.

A large imbedded coal fire provides a heated mass that will be extremely difficult to extinguish with CO_2 alone. It is, however, important that supplemental fire fighting be done in an inert environment. The CO_2 system's primary mission is to prevent the large fire from occurring by detecting the fire early by the CO detectors while it is still small and then inerting to contain and extinguish.

Bulk liquid CO_2 units are generally used, but cylinders can be used for inerting smaller silos. (The bulk CO_2 supply is frequently used for other applications such as pulverizer inerting, generator hydrogen purge, and some fire suppression system applications in the turbine building.) The bulk CO_2 units have the capability of being refilled while they are being used. For the smaller silos, CO_2 vapor is withdrawn from manifolded cylinders without siphon tubes.

Carbon dioxide inerting has a beneficial effect as soon as it reaches the oxidizing coal. As the supporting oxygen level drops, less heat is generated, helping to limit fire spread. But to totally extinguish any large burning coal mass can require a very high CO_2 concentration held for a long time since the cooling capacity of the CO_2 is relatively small and the coal itself tends to retain heat.

The CO_2 system should be considered as a fire prevention/fire containment system. The system can be operated from a dedicated manual release station or by the plant programmable logic controller (PLC) from the control room. Plant personnel need not be involved except to adjust the CO_2 flow rates as needed to manage the inerting or fire suppression.

When carbon dioxide is used, there is a risk of oxygen depletion in the area above, around, or below a silo, bin, or bunker. Areas where gas could collect and deplete oxygen, which might include the tripper room and areas below the discharge feeder gate, should be identified with appropriate barriers and warning signs.

Nitrogen has been used successfully to inert silo fires. It is applied in a manner very similar to carbon dioxide. A notable difference is that nitrogen has about the same density as air (whereas carbon dioxide is significantly more dense). Therefore, it must be applied at numerous injection points around the silo to ensure that it displaces available oxygen, which results in the need for more injection equipment and a larger quantity of agent.

Emptying the Silo. The silo can be unloaded through the feeder pipe, but it is a dirty, messy operation. It is necessary to bypass the feeder belt and to dump the coal onto the floor of the power house at the feeder elevation. A hose crew should be available to extinguish burning coal as it is discharged from the silo. There is a risk that dust raised during this activity can ignite explosively. High-expansion foam can be applied.

Carbon monoxide produced during the combustion process will also tend to settle in the lower elevation and can be a hazard to the hose crew. Once spilled and extinguished, it is usually necessary to shovel the coal into a dump truck for transport back to the coal pile.

Manual Fire-Fighting. Regardless of the type of suppression approach selected, prefire planning is an important element of successful fire control and extinguishment. All necessary resources should be identified and in place prior to beginning fire suppression activities. If necessary materials are not stockpiled on-site, suppliers should be contacted in advance to ensure that equipment and supplies are available on relatively short notice.

The personnel requirements for this fire-fighting activity should be identified in advance. Personnel should be trained and qualified for fire-fighting in the hot, smoky environment that might accompany a silo fire. This training includes the use of self-contained breathing apparatus and personal protective equipment. Personnel engaged in this activity should be minimally trained and equipped to the structural fire brigade level as defined in NFPA 600. If station personnel are not trained in use of self-contained breathing apparatus, it will be necessary for the public fire department to perform fire-fighting in these areas. Station personnel are still needed to assist with operational advice and guidance. The public fire-fighting agency that responds to a fire at the facility should be involved in preplanning fire-fighting activities for silo fires. The public fire service might need specific instruction concerning operation and potential hazards associated with coal silo fires as well as operation in the power plant environment. It is important that the responding fire service be supplied information and guidance at every opportunity.

The resources of the station and the local fire service need to work in concert, including working with control room operators and keeping them apprised of fire control operations. Preplanning should include administrative details such as chain of command, access, and so forth. Operations should be coordinated by an established incident command system in conformance with NFPA 1561. All personnel should be familiar with and practice this system prior to the event.

A.7.4.3 *Coal Dust Hazards.* The hazard of any given coal dust is related to the ease of ignition and the severity of the ensuing explosion. The Bureau of Mines of the U.S. Department of Interior has developed an arbitrary scale, based on small scale tests, that is quite useful for measuring the potential explosion hazard of various coal dusts. The ignition sensitivity is a function of the ignition temperature and the minimum energy of ignition, whereas the explosivity is based on data developed at the Bureau of Mines. The test results are based on a standard

Copyright 2015 National Fire Protection Association (NFPA). Licensed, by agreement, for individual use and download on June 24, 2015 to LEADER AND READER for designated user PATTARAPORN SRITRAKOOL. No other reproduction or transmission in any form permitted without written permission of NFPA. For inquires or to report unauthorized use, contact licensing@nfpa.org.

Pittsburgh coal dust taken at a concentration of 0.5 oz/ft^3 (0.5 kg/m^3). The explosibility index is the product of ignition sensitivity and explosion severity. This method permits evaluation of relative hazards of various coal dusts.

When coal silos are operated with low inventory there is potential for suspended coal dust to enter the explosive range. As in spontaneous heating, the explosive range and potential for explosion are based on the above variables.

A.7.4.3.1 Constructing enclosure hoods at transfer points can minimize the amount of dust released to surrounding areas, which can reduce the need for dust collection.

A.7.4.3.2 At times when wet coal is being handled, additional dust suppression might not be desired. In these cases, the interlock between the suppression system and the conveyor should be capable of an override to allow moving coal without suppression. Overriding the dust suppression interlock should be considered to be an impairment of the overall fire protection system and should be handled per 17.4.2.

A.7.4.6.2 In many cases, coal conveyors within structures are equipped with dust collection hoods or "skirting," which makes the protection of the top conveyor belt(s) difficult by conventional placement of sprinklers and nozzles. In plants where high pyritic coals are being used, it is recommended that protection be provided inside these hoods as well as all drive pulley enclosures. Care should be taken when installing the sprinklers or nozzles to allow for easy access to these devices for inspection purposes.

Where conveyors are located in enclosed gallery structures, protection for the top belt commonly takes the form of sprinklers or nozzles at the ceiling of the gallery with a second level of protection for the return belt. In this instance, the entire width of the gallery should be included in the design area for the upper level of protection.

If a water spray system is selected for conveyor fire protection, consideration should be given to designing the conveyor structure to support the weight of wetted coal for the entire length of the conveyor.

All conveyors that present an exposure to critical facilities or processes should be considered as "critical to power generation." Fire due to an unprotected conveyor transporting materials into the powerhouse can result in fire that creates unacceptable loss of power generation.

A.7.4.6.5 Water has been successfully used to control dust collector fires. However, the amount of water delivered to a dust collector can create structural support problems for the equipment itself and for the supporting structure or building. The use of fire-fighting additives with water can be highly effective for coal fires, especially sub-bituminous coal fires. This use of fire-fighting additives can typically result in less water being delivered into the dust collector due to the enhanced fire suppression properties of the agent, subsequently shortening the delivery period. A reduction in water can assist in minimizing the potential weight issues.

A.7.6.2.3 Special detection systems currently used are the following:

(1) Infrared detection systems to monitor rotor or stator surfaces
(2) Line-type detectors between intermediate and cold-end basket layers

There has been limited fire experience with both systems to date. Low light television cameras mounted outside the air heater have a possible application in air heater fire detection.

A.7.6.4.2 Temperature sensors alone might not be adequate to provide early warning of a fire in an electrostatic precipitator.

A.7.6.5 *Scrubber Fire Loss Experience.* There have been at least three major fires involving scrubbers with plastic lining or plastic fill. They have the following factors in common:

(1) Fire occurred during an outage.
(2) Fire was detected immediately.
(3) Fire was caused by cutting and welding.
(4) Rapid fire spread prevented access to the interior of the scrubber, which made manual fire fighting ineffective.

The following are brief summaries of the losses reported to date.

Fire No. 1. The scrubber was 36 ft (11 m) in diameter and 139 ft (42 m) high. The scrubber contained two sections of polypropylene packing: one section was 4 ft (1.2 m) thick and one section was 3 ft (1 m) thick. The 3 ft (1 m) thick section was removed at the time of the fire. Both layers of packing extended across the full diameter of the tower. An outside contractor was making repairs on a turning vane at the top of the scrubber. A welding blanket had been placed over the top of the fill. Sparks from the welding operation fell through the wood work platform and ignited the polypropylene packing 30 ft (9 m) below. The fire was detected immediately. Plant employees reacted rapidly and followed procedures established in advance. They actuated the demister spray nozzles, then closed access doors and the outlet damper to isolate the scrubber. Plant employees used 1½ in. (3.8 cm) hose on the outside of the duct. The public fire department responded. Total fire duration was two minutes. Property damage was estimated at $5 million, and the outage was 41 days.

Fire No. 2. There were four scrubbers in one building. The scrubbers were 30 ft × 30 ft × 80 ft (9 m × 9 m × 24 m) high. The scrubbers had an extensive amount of plastic packing and were lined. Maintenance was being performed on one of the scrubbers. A crew planned to make repairs to the liner near the top of the scrubber. The repair work involved cutting and welding operations. Hot metal fell down inside the scrubber. A small fire was observed in the lower part of the scrubber that quickly spread and burned out the lining and packing. Fire burned through the expansion joint on the top of the scrubber and spread throughout the penthouse, with damage to building structural steel in the area above the scrubber. Property damage was estimated at $7 million, and the outage was about 8 months. This was due to the need for the replacement of the shell.

Fire No. 3. There were three absorber towers in one building. The towers were 40 ft × 65 ft × 185 ft (12.1 m × 19.7 m × 56 m) high. The scrubbers were lined with a rubber coating and had polypropylene mist eliminators. Workers were in the exhaust duct of one of the scrubbers attempting to seal small holes in the duct. Plastic sheeting was used to protect an expansion joint. Sparks from the welding operation ignited the plastic. Fire was detected immediately. Portable extinguishers were used to fight the fire. The fire quickly spread to wood scaffolding. The plant fire brigade responded but could not enter the duct due to dense smoke. Fire spread to the polypropylene mist eliminator and the rubber lining in the scrubber. Heat from the fire vented into the building, collapsing the roof. The scrubber was destroyed. Property damage was estimated at $42 million. The station was under construction, and its completion was delayed 2 years by the fire.

Copyright 2015 National Fire Protection Association (NFPA). Licensed, by agreement, for individual use and download on June 24, 2015 to LEADER AND READER for designated user PATTARAPORN SRITRAKOOL. No other reproduction or transmission in any form permitted without written permission of NFPA. For inquires or to report unauthorized use, contact licensing@nfpa.org.

A.7.7.3.6 On some turbine-generators employing the guard pipe principle, the guard piping arrangement terminates under the machine housing where feed and return piping run to pairs of bearings. Such locations are vulnerable to breakage with attendant release of oil in the event of excessive machine vibration and should be protected.

A.7.7.4.1.1 To avoid water application to hot parts or other water sensitive areas and to provide adequate coverage, designs that incorporate items such as fusible element operated directional spray nozzles can be necessary.

A.7.7.4.1.3 If the lubricating oil reservoir is elevated, sprinkler protection should be extended to protect the area beneath the reservoir.

If the lubricating oil reservoirs and handling equipment are located on the turbine operating floor and not enclosed in a separate fire area, then all areas subject to oil flow or oil accumulation should be protected by an automatic sprinkler or deluge system.

A.7.7.4.1.4 Above the operating floor, ceiling level sprinkler systems might not be effective to protect floor level equipment and components from oil fires because of the high ceilings [typically in excess of 40 ft (12 m)].

A spray fire can blow past conventional automatic sprinkler protection without operating the system and can expose structural steel or critical components of the turbine generator. The concern is that fire exposure to the roof for the rundown time of the turbine could bring down building steel and result in damage to long lead time equipment critical to operation of the turbine or that the fire could directly expose critical equipment such as the generator. Where possible, one of the following protection measures should be used:

(1) *Enclosure of the hazard.* An example would be location within a room of noncombustible construction protected with automatic sprinkler protection.
(2) *Use of a barrier.* A metal barrier could be installed between the hazard and critical equipment or the roof of the building with automatic sprinklers installed under the barrier.
(3) *Water spray protection.* Tests have shown that deluge sprinklers over the hazard can reduce the size of an oil spray fire. The tests were conducted with pendant sprinklers spaced 5 ft × 5 ft (1.5 m × 1.5 m) apart, with an orifice coefficient of K-8.0 (115) and an end head pressure of 50 psi (3.9 bar) located 6 ft (1.8 m) over the hazard. The system should be automatically activated by a listed line type heat detection or flame detection system.

A.7.7.4.1.5 Protein and aqueous film-forming foams (AFFF) are effective in control of flammable liquid pool fires in high bay buildings. FM Global conducted tests for the Air Force at the Test Campus in 1975. Flammable liquid pool fires 900 ft^2 (83.6 m^2) in area were used. Foam was applied from nozzles at ceiling level 60 ft (18.3 m) above the floor. Foam reduced the fire area by 90 percent less than 5 minutes after application started. It is effective on high flashpoint liquid fires such as mineral oil. Tests have also been conducted using foam for the protection of chemical process structures. The tests involved a three-dimensional spill of flammable liquid from a process vessel 20 ft (6.1 m) above the floor onto grade level. The process structure was 40 ft (12.2 m) high. Foam protection was provided at each floor elevation. Foam limited the size of the pool fire but had no effect on the three-dimensional spill fire.

Micelle-encapsulating agents can enhance open head water spray systems for pool fires. Research has been conducted for use of this agent on some hydrocarbon pool fires, although turbine lubricating oil has not been tested. In addition, testing has not been performed for three-dimensional fire scenarios that can occur during a turbine lubricating oil spray fire. See A.7.4.2.6 for additional information on micelle-encapsulating agents.

A.7.7.4.2 Additional information concerning turbine-generator fire protection can be found in EPRI Research Project 1843-2 report, *Turbine Generator Fire Protection by Sprinkler System.*

In February 1997 the National Institute of Standards and Technology published NIST Report Technical Note 1423, "Analysis of High Bay Hanger Facilities for Fire Detector Sensitivity and Placement." This report provides design recommendations for sprinkler and detection systems (protecting fuel pool fires) at those facilities, which can provide some design guidance if sprinkler systems are installed at the ceiling level of the turbine building.

However, turbine building hazards include pool fires and three-dimensional and spray fires. Without further testing, such systems should not be considered to provide equivalent protection to the turbine building systems recommended in the body of NFPA 850. If used in addition to those recommended systems, a properly designed ceiling level sprinkler system can provide additional protection for the turbine building roof if exposure to a large fire on the operating floor is a concern.

A.7.7.4.2.1 Automatically actuated systems have proven to actuate properly under fire conditions and are not prone to spurious actuation. If a manually operated water system is installed, consideration should be given to a supplemental automatic gaseous fire extinguishing system.

A.7.7.4.2.2 The 2000 edition of NFPA 850 allowed manual operation of bearing protection systems. In most incidents involving bearing oil releases this would be adequate. In some types of release, such as seal oil failures, that might not allow the operator time to activate the system. There are some turbine buildings where the control room is not located in the turbine building, which would also delay response.

If turbine-generator bearings are protected with a manually operated sprinkler system, the following should be provided:

(1) Manual activation should be from the control room or a readily accessible location not exposing the operator to the fire condition. Staffing of plant should be sufficient to promptly handle this function as well as other responsibilities during an emergency of this nature.
(2) Automatic fire detection should be provided over the area of each bearing and within the skirting of the turbine where a potential for oil to pool can alert operators to a fire condition.
(3) Documented procedures should be in place with authorized approval given to operators to activate the system if necessary in a fire condition.
(4) Periodic training should be given to operators regarding the need for prompt operation of the system.

A.7.7.4.6 There is limited information available detailing industry experience with fire-resistant fluids as turbine lubrication oils or in seal oil systems. The use of fire-resistant fluids in hydraulic systems is common in the utility industry. Literature is available documenting use of these fluids in Europe. Information detailing operational experience using fire-resistant

Copyright 2015 National Fire Protection Association (NFPA). Licensed, by agreement, for individual use and download on June 24, 2015 to LEADER AND READER for designated user PATTARAPORN SRITRAKOOL. No other reproduction or transmission in any form permitted without written permission of NFPA. For inquires or to report unauthorized use, contact licensing@nfpa.org.

fluids on lubrication oil systems on turbine-generators in North America is limited.

Utilizing a listed fire-resistant turbine lubricating oil potentially reduces the hazard associated with the lubricating oil system, but the remaining hazards still need to be addressed in determining the appropriate suppression systems and design densities needed in these areas (i.e., grouped cables and other mineral oil–based lubricating systems).

Given the fact that fire-resistant fluid still has the ability to burn, care should be exercised in selecting the fluid. When selecting the fluid, consideration should be given to the fluid's heat release rate, fire point, and ability to sustain a spray or cascading fire once the ignition source is removed. The autoignition temperature of the fluid used should be sufficient to minimize the potential for a fire based on common ignition and heat sources located in the turbine generator area.

A.7.8.1.5 Early detection of fire in the turbine building is important for effective emergency action. Control rooms in some plants are outside the turbine building, and operators make hourly rounds, which improves operator safety and ability of the operator to remain in the room in a fire emergency but could result in a delay in fire detection.

A.7.8.5 ANSI/IEEE 484, *Recommended Practice for Installation Design and Installation of Vented Lead-Acid Batteries for Stationary Applications*, recommends a minimum ventilation rate of 2 percent for battery rooms. However, NFPA 497 indicates that such areas should be classified if the ventilation rate is not at least 1 percent (25 percent of the lower flammable limit for hydrogen).

A.7.8.6 In recent years some transformers have been designed with relatively high design temperatures. Operation of the cooling fans can release large amounts of heat that can inadvertently trip deluge systems using rate-of-rise or rate-compensated heat detection equipment. To avoid these inadvertent trips, fixed temperature heat detection systems should be used to activate transformer deluge water spray systems.

A.7.8.7 For information pertaining to fire protection guidelines for substations, see ANSI/IEEE 979, *Guide for Substation Fire Protection.*

A.8.1.3 Although it is intended that these recommendations are to be applied to fixed, non-residential ICEs only, larger portable units (often trailer mounted) can include fire detection and suppression systems to limit damage from fire. The recommendations of this chapter can be used as guidance for these units as well.

A.8.5.1.3 In the event of a pipe failure, large amounts of oil or fuel could be released and ignite on contact with hot metal parts. In addition to external fire hazards, CTs are subject to explosions if flameout occurs and the fuel is not shut off immediately, or if fuel is admitted to a hot engine and ignition does not occur. Crankcase explosions in ICEs have caused large external fires.

A.8.5.2.1 When a flameout occurs, fuel valves should close as rapidly as possible to preclude the accumulation of unburned fuel in the combustion chamber. Loss experience documents that fires or explosions have occurred in systems where the fuel isolation was not achieved within 3 seconds.

A.8.5.3.2 Internal combustion engines do not normally have any hydraulic systems.

A.8.5.4.2.1(4) Emergency power generation for facilities such as hospitals is provided for life safety of persons who might be non-ambulatory. In such situations, the need to provide an uninterrupted power supply for essential services outweighs the desire to minimize damage to the unit and immediately adjacent facilities.

A.8.5.4.3 Fires involving only surface burning materials can often be extinguished during the gas discharge period. However, where surface temperatures of exposed equipment or installed components remain above the ignition temperature of combustibles present beyond the end of the gas discharge period, and/or where the protected enclosure is not tightly sealed, it is necessary to consider this in the design of the protection system. The common solution is by the addition of an extended gas discharge system to supplement the initial gas flooding system.

The system designer requires, for each type of installation, information on length of time required for "hot" components to cool after shutdown, plus information on gas loss rate from the enclosure.

This information is often obtained by testing prototype units. The information is the start of the proposed gas system design but does not guarantee that a particular system of that type does not have greater gas loss potential. *(See 4.4.3.3.1.4 of NFPA 12, which requires an inspection of each unit that could reveal gas loss points not originally considered.)*

Recognizing this, NFPA 12 requires a full discharge test for each CO_2 system *(see 4.3.3.4.1)* before being placed in service.

Prudent gas system designs anticipate that over a span of time, an enclosure is likely to develop more leakage points, thus making a system designed without any factor of safety potentially prone to failure in the event of a system discharge years after the original installation. Some systems require inspection of storage and components after a number of years. These often require de-pressurization of the CO_2 supply. This can be an excellent opportunity to discharge the system as a "test," checking that the system still performs as originally designed.

Additionally, during major outages (such as when the casing is removed) both the enclosure and the suppression piping system will typically undergo some degree of disassembly. After reassembly, functional testing is essential to ensure the system will operate as designed.

Only a full discharge test will ensure that adequate concentration is achieved and maintained after maintenance. Alternatively, "door fan" testing of an enclosure can be used to verify the tightness of a protected enclosure following enclosure maintenance if a baseline door fan test was conducted when the original concentration test was performed. A door fan test does not verify the suppression system integrity; a functional test is needed for that verification. However, most turbine and engine enclosures are not set up for functional testing. In addition, the amount of potential loss openings can be identified in this way, but not necessarily the location of the openings. Location of gas loss points as important as their size in enclosures protected with gas flooding systems.

It is important that documentation of the amount of gas loss that has been designed into the system and how that has become a part of the design be retained so there is a basis for determining the adequacy of the system after years of service.

A.8.5.4.3.3 Proper gaseous extinguishing system design dictates that the design concentration be held in the compartment for the cooling time necessary to ensure that all exposed

Copyright 2015 National Fire Protection Association (NFPA). Licensed, by agreement, for individual use and download on June 24, 2015 to LEADER AND READER for designated user PATTARAPORN SRITRAKOOL. No other reproduction or transmission in any form permitted without written permission of NFPA. For inquires or to report unauthorized use, contact licensing@nfpa.org.

surfaces are below the autoignition temperature (AIT) of combustibles within the protected space. Aeroderivative units have a rapid cooldown time due to their lightweight casings. Conversely, the soak time for larger turbines, which can have rundown times exceeding 30 minutes, requires an appropriately selected concentration hold time to ensure that risk of re-igniting is mitigated. It also has been shown that the initial gas discharge will not hold for the cooldown time period in most turbine or engine compartments. Therefore, the designer should determine the extended discharge rate needed to maintain agent concentration. This usually requires discharge testing to determine if design concentrations can be maintained. Where gas concentrations cannot be effectively maintained, an alternative system, such as a high-expansion foam or water extinguishing system, can be desirable.

A.8.5.5.1 The use of less flammable filter or media in the CT air inlet is recommended where not constrained by other engineering needs (such as pressure loss across the elements) and cost considerations associated with UL 900 Class I (do not contribute fuel) versus Class II fire-resistant elements.

A.8.5.6.3 ICE-powered generators are normally provided with an open drip-proof enclosure. Shielding might be needed when a water-based fire protection system is used.

A.9.1.3.2 For personnel safety considerations, see NFPA 85 for further guidance.

A.9.1.5.1 Based on plant geometry, combustible loading, and staff size, a 250 gpm (946 L/min) monitor nozzle could be needed in lieu of or in conjunction with hose.

A.9.1.5.2 Conveyors can be considered protected by overhead building protection if not enclosed or hooded.

A.9.1.5.5 Duct systems could be used for odor control by exhausting air from processing to the boiler. A fire in an unprotected plastic duct system could result in a number of fires in different areas of the processing buildings overtaxing the sprinkler system.

A.9.3.3.1 The requirements are based on storage heights not exceeding 20 ft (6.1 m).

The specified density was based on a composition of 34 percent paper, 17 percent food waste, 8 percent plastic and rubber, 10 percent glass, 11 percent metal, 14 percent leaves and grass. Solid pile storage to 20 ft (6.1 m) was used. This resulted in selecting a Class III commodity (.22/3000) for 20 ft. The decision was made to increase the density to .25/3000.

If the mix is different from above, consult NFPA 13.

A.9.3.3.2 See NIST Report Technical Note 1423, "Analysis of High Bay Hanger Facilities for Fire Detector Sensitivity and Placement."

A.9.4.2.2.3 An example of the postulated worst credible case explosion might be an acetylene tank. Explosions involving detonable material are beyond the scope of this document.

A.9.4.3.2 The radiation imaging equipment is superior to methods relying on operators standing beside the conveyor using rakes to identify tanks or other containers of flammable materials. The following factors make this method less than effective:

(1) Speed of conveyor — the faster the conveyor is moving, the less chance operators have to detect tank-shaped objects
(2) Depth of trash on the conveyor
(3) Concealment of tanks in other waste (e.g., a propane tank inside a mattress)

A.9.4.4.1 Where a facility has a rigidly enforced operating sequence and satisfies itself and the authority having jurisdiction that the operating practices and the judgment of the plant operators provide acceptable protection, this interlock with the fire protection system could be permitted to be provided through operator action in accordance with operating procedures.

A.9.4.4.3 The recommendations in 9.4.4.3 are based on storage heights not exceeding 20 ft (6.1 m).

A.9.4.4.4 Due to the large quantity of platforms, equipment, and walkways, care should be taken to include coverage under all obstructions greater than 4 ft (1.2 m) wide.

A.9.4.5.3 Automatic cleaning systems have not been practical. Manual cleaning of at least once per work shift has been found necessary in several facilities in order to be effective. Manual cleaning could also not be practical since the shredder could be in continuous operation for several days. Manufacturers have attempted to locate pressure sensors in areas where they will not be plugged. If there is a delay in operation of the suppression system, there could be an increase in pressure above what would be expected in an unsuppressed explosion.

A.9.5.4.2 Biomass fuels exhibit a wide range of burning characteristics and upon evaluation can require increased levels of protection.

A.9.6.1.1 In general, rubber tires have a Btu content of 15,000 Btu/lb (7180 J/kg), roughly two to three times that of wood or RDF.

A.9.6.2.2 For additional guidance on cranes and storage pits, refer to 9.4.2.

A.9.6.3.3 Addition of foam to the monitor nozzles should be considered.

A.10.5.1.2 The wind turbine generators are supplied typically as a packaged unit with blades and hub mounted to a shaft that turns a gearbox and generator, all of which are installed within a nacelle that is, in turn, placed at the top of the wind turbine tower. The nacelle and a tubular tower form an all-weather housing. In addition to weather protection, the nacelles are designed to provide thermal and acoustical insulation. More recent designs employ a torque converter that allows the variable speed of the rotor and drive shaft to be converted to a constant speed for rotor rotation within the generator. Other designs feature direct-drive, permanent magnet type machines in which the rotor rotation is translated directly to the generator field so that a gearbox, with its weight and oil hazards, is not required.

Control cabinetry can be mounted in the nacelle or tower, or within a pad-mounted enclosure located adjacent to the tower, or in a combination of these. Power developed by the generator is routed through cabling down the tower and then onward to join in parallel the outputs of other units before power conditioning is applied and the facility's power output voltage is stepped up for use on the grid. For large wind farms, power conditioning (i.e., harmonics, reactive and real power controls) is done in the power electronic module located at each individual wind turbine. Large wind farms have a significant effect on the stability of the power grid, so the wind turbine generator is required to exhibit voltage, power, and frequency stability at the generator terminal in a way that is similar to conventional generators.

Copyright 2015 National Fire Protection Association (NFPA). Licensed, by agreement, for individual use and download on June 24, 2015 to LEADER AND READER for designated user PATTARAPORN SRITRAKOOL. No other reproduction or transmission in any form permitted without written permission of NFPA. For inquires or to report unauthorized use, contact licensing@nfpa.org.

The wind turbine tower foundation might include a concrete or steel vault through which power and control cabling is routed. Power conditioning needs and voltage step-up requirements will dictate what other structures or enclosures might be needed.

Major fire hazards associated with wind farms are as follows:

(1) Flammable and combustible liquids
(2) Electrical components and wiring
(3) Combustible materials of construction

In the event of a pipe or fitting failure within the nacelle, significant amounts of oil could be released and ignite. In addition, faults in electrical cabinetry, cabling, and transformers in the nacelle or tower could result in fires.

Figure A.10.5.1.2(a) shows a typical wind turbine, which has the following components:

(1) *Anemometer.* Measures the wind speed and transmits wind speed data to the controller.
(2) *Blades.* Most turbines have either two or three blades. Wind blowing over the blades causes the blades to "lift" and rotate.
(3) *Brake.* A disc brake, which can be applied mechanically, electrically, or hydraulically to stop the rotor in emergencies.
(4) *Controller.* The controller starts up the machine at wind speeds of about 8 to 16 mph (13 to 26 kph) and shuts off the machine at about 55 mph (89 kph). Turbines do not operate at wind speeds above about 55 mph (89 kph) because they might be damaged by the high winds.
(5) *Gear box/torque converter.* Gears/torque converters connect the low-speed shaft to the high-speed shaft and increase the rotational speeds from typically less than 60 rotations per minute (rpm) to about 1000 to 1800 rpm, the rotational speed required by most generators to produce electricity. The gear box is a costly (and heavy) part of the wind turbine, and wind turbine manufacturers have developed "direct-drive" generators that operate at lower rotational speeds and do not need gear boxes.
(6) *Generator.* Usually an off-the-shelf induction generator that produces 60-cycle ac electricity.
(7) *High-speed shaft.* Drives the generator.
(8) *Low-speed shaft.* The rotor turns the low-speed shaft at typically less than 60 rotations per minute.
(9) *Nacelle.* The nacelle sits atop the tower and contains the gear box, low- and high-speed shafts, generator, controller, and brake. Some nacelles are large enough for a helicopter to land on.
(10) *Pitch.* Blades are turned, or pitched, out of the wind to control the rotor speed and keep the rotor from turning in winds that are too high or too low to produce electricity.
(11) *Rotor.* The blades and the hub together are called the rotor.
(12) *Tower.* Towers are made from tubular steel [as shown in Figure A.10.5.1.2(a), concrete, steel lattice, or a combination thereof. Because wind speed increases with height, tall towers enable turbines to capture more energy and generate more electricity.
(13) *Wind direction.* The turbine in Figure A.10.5.1.2(a) is an "upwind" turbine, so-called because it operates facing into the wind. Other turbines are designed to run "downwind," facing away from the wind.
(14) *Wind vane.* Measures wind direction and communicates with the yaw drive to orient the turbine properly with respect to the wind.
(15) *Yaw drive.* Upwind turbines face into the wind; the yaw drive is used to keep the rotor facing into the wind as the wind direction changes. Downwind turbines do not require a yaw drive; the wind blows the rotor downwind.
(16) *Yaw motor.* Powers the yaw drive.

See Figure A.10.5.1.2(b) for wind farm facility components.

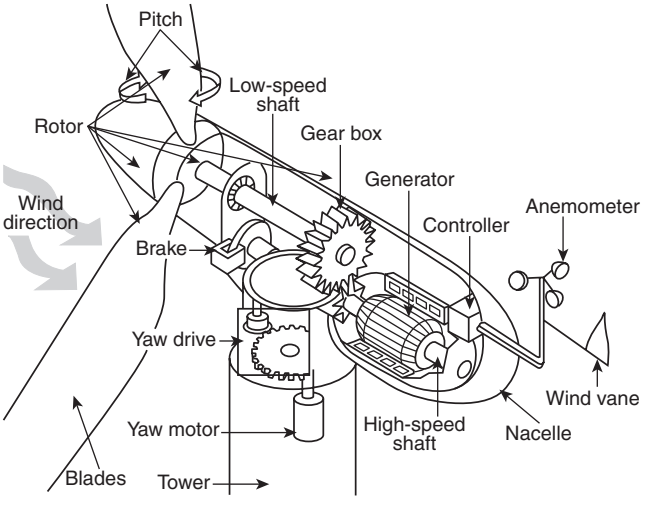

FIGURE A.10.5.1.2(a) Typical Wind Turbine Components. ***[Courtesy of U.S. DOE Energy Efficiency and Renewable Energy (EERE).]***

A.10.5.3.2.2 The integrity of the enclosure to be flooded and the interlocks between the two should be maintained. The enclosure integrity should be verified whenever it has been disassembled or modified. However, the enclosure integrity should be verified by a door fan test or other means of detecting leakage. The test should be conducted at least every 5 years.

A.10.5.3.6.2 The duration that fire suppression is maintained should be sufficient to span the particular wind turbine shutdown and cooldown times as determined by the manufacturer.

A.10.6.2 Provision of a separate excitation system is rare. For many wind farm generators, double fed induction generators are used. Here, the excitation source is from the grid and there is no separate excitation source. Where synchronous generators are used, permanent magnets can be used to avoid having a separate excitation source.

A.11.1 Solar plants use the energy of the sun to produce electrical power. The process used in current commercial utility–scale applications typically involves one of two basic technologies:

(1) Photovoltaic (PV) solar power that is associated with the use of PV panels in various arrays in which energy from the sun is converted to dc electrical energy in each of the panels that is subsequently converted to ac power for delivery to the grid.

Copyright 2015 National Fire Protection Association (NFPA). Licensed, by agreement, for individual use and download on June 24, 2015 to LEADER AND READER for designated user PATTARAPORN SRITRAKOOL. No other reproduction or transmission in any form permitted without written permission of NFPA. For inquires or to report unauthorized use, contact licensing@nfpa.org.

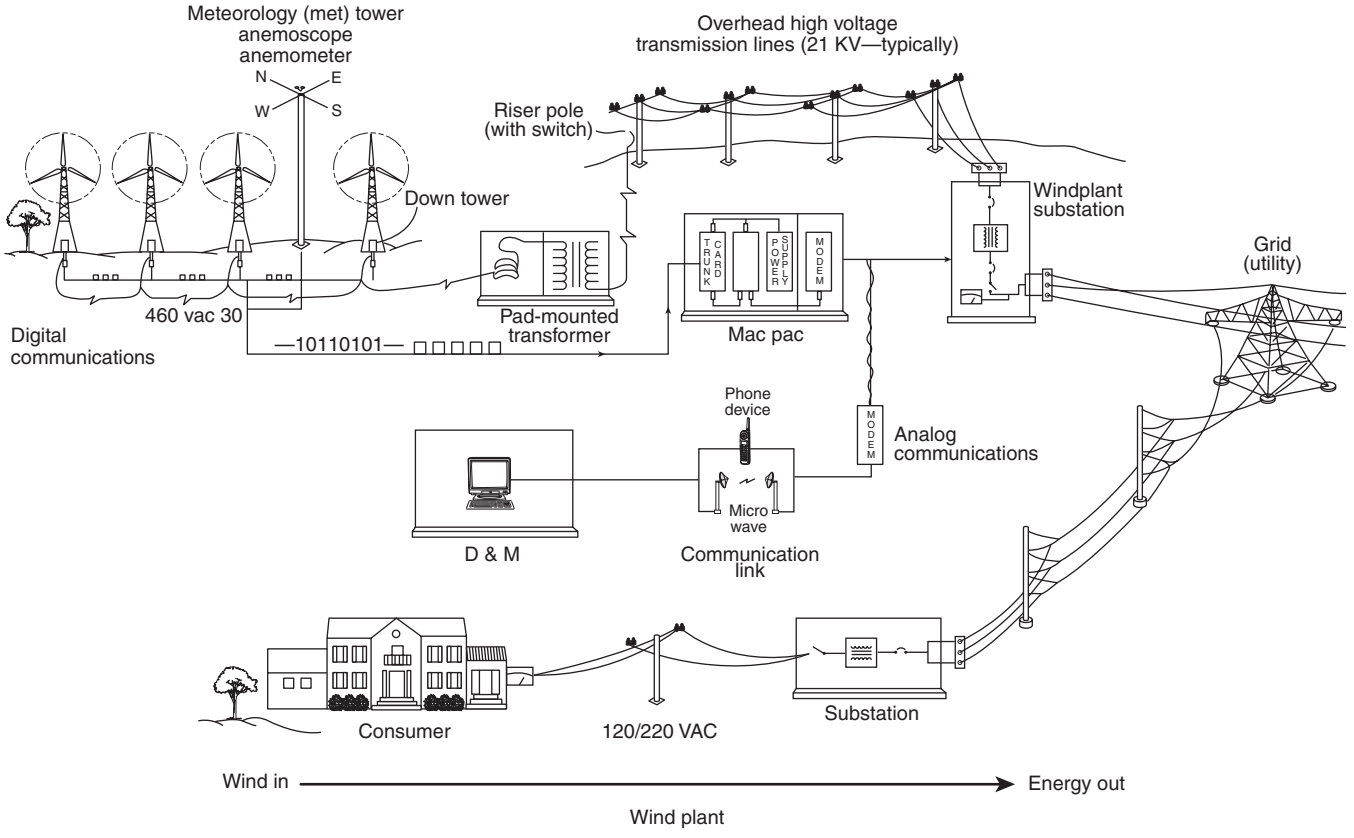

FIGURE A.10.5.1.2(b) Typical Wind Farm Facility Components.

(2) Concentrated solar power (CSP) that involves the production of steam via a heat transfer mechanism and then using the steam to drive a steam turbine generator.

A.11.3 The flammable HTF constitutes a significant fire hazard. Adequate protection in the form of hydrants and monitor nozzles, in addition to appropriate HTF piping isolation capability, is needed in the solar fields. Water-spray sprinkler protection should be provided for the HTF pumps, the ullage system, and the steam generator heat exchanger areas.

A.11.3.1 Photovoltaic (PV) technology involves the conversion of solar radiation into dc electricity using semiconductors that exhibit the photovoltaic effect. This conversion takes place in a PV solar cell that is made of various materials demonstrating photovoltaic properties and employing various technologies (e.g., crystalline silicon, thin film, etc.). Solar cells are assembled to form a solar panel, and multiple panels are put together to form a solar module. PV modules are installed on steel support structures arranged in long rows called strings that are adequately spaced to avoid "shading" of one from another. In the northern hemisphere, PV modules typically face south and are tilted according to the latitude of the PV site to maximize the solar radiation energy available to the module. Frequently, computer-controlled tracking systems are used to rotate the PV strings on a single axis as necessary to follow the movement of the sun throughout the day.

PV modules/strings are connected electrically in series and parallel and then connected by dc cabling to inverters that convert dc power into ac power. The number of inverters will depend on the size and layout of the PV site. The ac power produced in the inverters is then directed through a step-up transformer to a medium-voltage (e.g., 24 KV) ac cabling and delivered to a local substation where a plant step-up transformer raises the voltage to match that of the grid being served.

Concentrated photovoltaic (CPV) technology uses optic lenses/receptors to concentrate sunlight onto high-performance solar cells, thus increasing the electricity generated. The high-performance cells are then arranged on panels that are mounted to steel support structures that can be moved by dual-axis tracking systems to maximize the benefit of each ray of sunlight. Modules typically have their own inverter and are, otherwise, electrically connected in a manner similar to that employed in a flat-panel PV plant. The routing of electrical power out of a CPV plant is similar to that of a PV plant.

A.11.3.2 In concentrating solar plants, the heat energy of the sun is used to generate steam that will, in turn, be used in a steam turbine generator as part of a Rankine cycle similar to that employed in fossil fuel–fired steam plants.

Linear concentrating systems collect the sun's energy using long rectangular, curved (U-shaped) mirrors/reflectors referred to as solar collection assemblies that focus sunlight on tubes (or receivers) that run the length of the mirrors. The reflected sunlight heats a fluid flowing through the tubes. The hot fluid then is used to produce steam in a conventional steam generator, which is then used to turn a steam turbine generator to produce electricity. There are two major types of linear concentrator systems: 1) parabolic trough systems,

Copyright 2015 National Fire Protection Association (NFPA). Licensed, by agreement, for individual use and download on June 24, 2015 to LEADER AND READER for designated user PATTARAPORN SRITRAKOOL. No other reproduction or transmission in any form permitted without written permission of NFPA. For inquires or to report unauthorized use, contact licensing@nfpa.org.

where receiver tubes are positioned along the focal line of each parabolic mirror; 2) and linear Fresnel reflector systems, where one receiver tube is positioned above several strip-like mirrors to allow the mirrors greater mobility in tracking the sun. Such systems permit the use of more reflective surface in the same amount of space as a parabolic trough system.

A power tower system uses a large field of flat mirrors known as heliostats to focus and concentrate sunlight onto a receiver on the top of a tower. The heliostats are positioned by a dual-axis, sun-tracking system. A heat transfer fluid heated in the receiver is used to generate steam, which, in turn, is used in a conventional turbine generator to produce electricity. Some power towers use water/steam as the heat transfer fluid.

Each such system will differ from the other in thermodynamic efficiencies and the associated peak temperatures involved.

A parabolic trough system uses solar collection assemblies in which a tube-type receiver is positioned along the focus line in the middle of a trough-like parabolic mirror reflector that rotates around the receiver on a single axis as the sun moves from east to west. The tube-like receiver is filled with a working fluid that picks up heat as it flows through the receiver. The heated fluid is then used as a heat source in a steam generator that provides steam to a steam turbine generator.

Fresnel reflectors work in a similar manner in terms of focusing the sun's energy on a receiver through which a working fluid moves. Fresnel reflector technology employs many thin, flat mirror strips to concentrate sunlight onto the receiver tubes.

In concentrating solar power plants that use a "power tower," a vast array of computer-controlled mirrors/relfectors surrounds the tower. The reflectors are referred to as heliostats and use a dual-axis tracking system to focus the sun's energy on a specially designed thermal receiver at the top of a tower. The working fluid in the receiver can be water, and the water is sufficiently heated in the tower to make steam, thus eliminating the need for a separate steam generator.

With respect to the working fluid discussed above, the working fluid is frequently a specially formulated heat transfer fluid (HTF) that is heated in the solar fields to temperatures above 700°F (371°C). That heat is subsequently transferred from the HTF to water in a steam generator to produce steam. In a given solar field, there can be several hundred solar collection assemblies (SCAs) typically arranged in quadrants, with aisles between them. The HTF is moved through a given field by HTF pumps that bring the heated fluid to the power plant where, in steam generators (heat exchangers with the HTF on the primary side and water/steam on the secondary side) the hot fluid then flashes water to steam. The steam is then used to drive one or more steam turbine generators. Other than the aforementioned heat exchangers, the steam side is similar to most traditional steam turbine generator installations.

To augment the heating of the HTF, each solar generating unit is typically provided with auxiliary natural gas–fired HTF heaters. As the amount of available sunlight decreases, or during cloudy days, the heaters are operated as needed to maintain adequate HTF temperatures. Solar plants also typically have an ullage system that is used for removing impurities and water from the HTF to a separate ullage vessel. This vessel is then emptied into a truck-mounted tank for later disposal.

In some systems, the working fluid is molten salt. Such a fluid retains heat for some time and is therefore amenable to a plant design that incorporates energy storage with the ability to produce steam when the sun is over the horizon.

A.11.4.1.1 Pressurized leaks can ignite and spray burning HTF with thermal and non-thermal damage to other equipment. In one incident a valve stem failure resulted in HTF mist being carried over a large area, causing contaminate damage to a number of mirrors. A pressurized leak, even if distant from mirrors, could carry a long way due to high ambient temperature in solar plant locations.

A.12.2.1 Additional guidance for geothermal plants includes the following:

Geothermal Plants. Geothermal applications use heated fluids obtained by drilling wells in areas where there is a hydrothermal source. Most geothermal resources have temperatures from 300 to 700°F (149 to 371°C, but geothermal reservoirs can reach temperatures of nearly 1000°F (538°C). Steam or water from geothermal wells usually contains carbon dioxide, hydrogen sulfide, ammonia, and low concentrations of other constituents such as methane, ethane, propane, nitrogen, and antimony.

The energy conversion technologies are direct steam, flash steam, and binary systems. The type of conversion used depends on the state of the fluid (whether steam or water) and its temperature.

Direct Steam Systems. Direct steam systems are also called dry steam systems and direct brine steam systems. Steam taken from the ground is the working fluid. In this case, the plant is typically served by a number of production wells and injection wells.

The steam system typically comes to the turbine building directly from the production wells to supply the steam turbine. The turbine typically exhausts into a condenser. The low-energy steam is condensed back into low-pressure condensate in a contact- or surface- type condenser and is then typically redirected to the cooling tower. The overall system water balance is typically maintained by condensate injection pumps discharging the excess condensate back into the geothermal reservoir.

Because of the sulfur content (hydrogen sulfide) of the steam, this type of plant might have equipment for removal and for recovery of sulfur. Sulfur is typically converted to elemental form. Stainless steel piping is common, and titanium can be used in the turbine and condenser construction.

Special hazards include hydrogen sulfide abatement systems. Hydrogen sulfide is extracted from the condenser and can be burned in a gas-fired incinerator, depending on the constituents present in the non-condensable gas stream and the overall design characteristics of the abatement system. In addition, there could be arsenic present in the steam that precipitates on equipment components, which needs to be considered during maintenance activities. *[See Figure A.12.2.1(a).]*

Flash Steam Systems. In flash steam plants, the fluid either is pumped or flows under its own high pressure to generation equipment at the surface. The fluid enters a separator as a two-phase mixture of liquid and steam. The mixture is separated, with the vapor being directed to a steam turbine generator. Unflashed brine is typically piped to a second-stage separator, where a drop in pressure allows a second flashing of the brine. The two streams of steam (one high pressure and one lower pressure) drive the turbine generator. The spent steam from the turbine is condensed by circulating water from the cooling tower, and excess fluid from the cooling tower is either injected into the "cold" injection into system or com-

Copyright 2015 National Fire Protection Association (NFPA). Licensed, by agreement, for individual use and download on June 24, 2015 to LEADER AND READER for designated user PATTARAPORN SRITRAKOOL. No other reproduction or transmission in any form permitted without written permission of NFPA. For inquires or to report unauthorized use, contact licensing@nfpa.org.

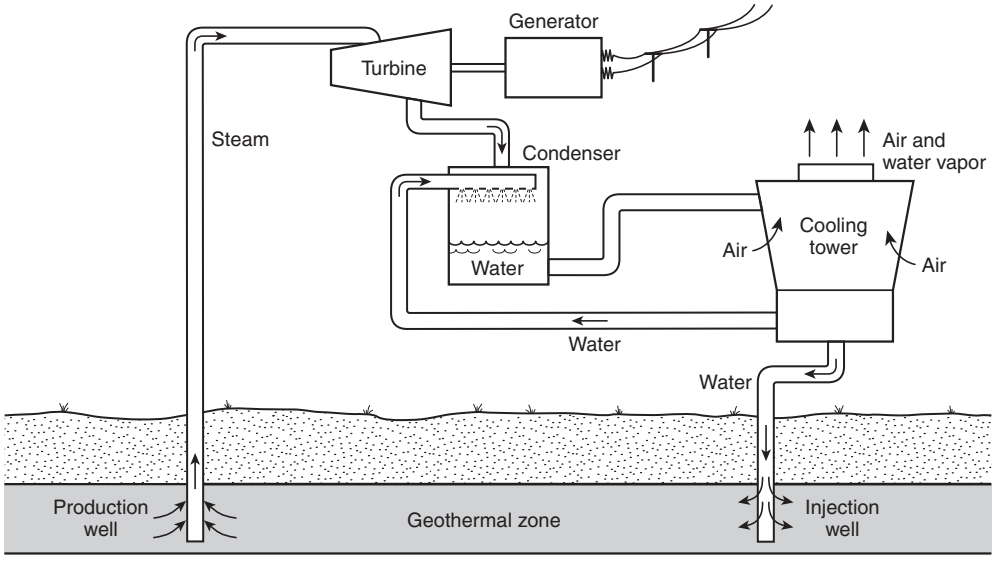

FIGURE A.12.2.1(a) Direct Brine/Steam (Dry Steam) Geothermal Power Plant. ***(Courtesy Idaho National Laboratory.)***

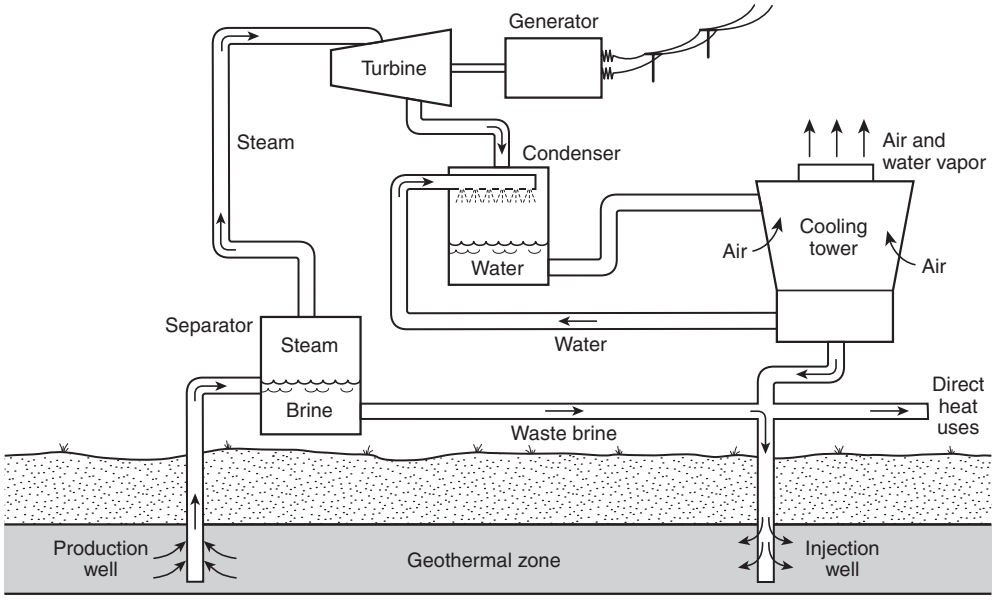

FIGURE A.12.2.1(b) Flash Steam Geothermal Power Plant. ***(Courtesy Idaho National Laboratory.)***

bined with the brine and injected into the "hot" injection system. The unflashed brine from the second-stage separator is pumped into the "hot" injection pipeline. This pipeline returns the brine to the geothermal reservoir at the outer limits of the reservoir. The injected brine provides both fluid makeup and pressure support to the reservoir. *[See Figure A.12.2.1(b).]*

Binary Cycle Systems. Binary cycle plants are plants in which moderate-temperature water from a geothermal field is used to flash a working fluid to vapor, which then drives a turbine. The working fluid is condensed and cycled back to the heat exchanger for renewal of the process. This is a closed-loop system.

The working fluid used is a low flash point flammable liquid (e.g., isobutane, isopentane, and n-pentane). Fluid selection is largely based on water temperature from the field and subsequent efficiency of the process. There could be several thousand gallons of fluid in enclosed systems depending on the size of the plant. The fluid is condensed in either a water-cooled condenser or an air-cooled condenser. The fluid is recycled to the vaporizer by a fluid cycle pump. Pressure relief

Copyright 2015 National Fire Protection Association (NFPA). Licensed, by agreement, for individual use and download on June 24, 2015 to LEADER AND READER for designated user PATTARAPORN SRITRAKOOL. No other reproduction or transmission in any form permitted without written permission of NFPA. For inquires or to report unauthorized use, contact licensing@nfpa.org.

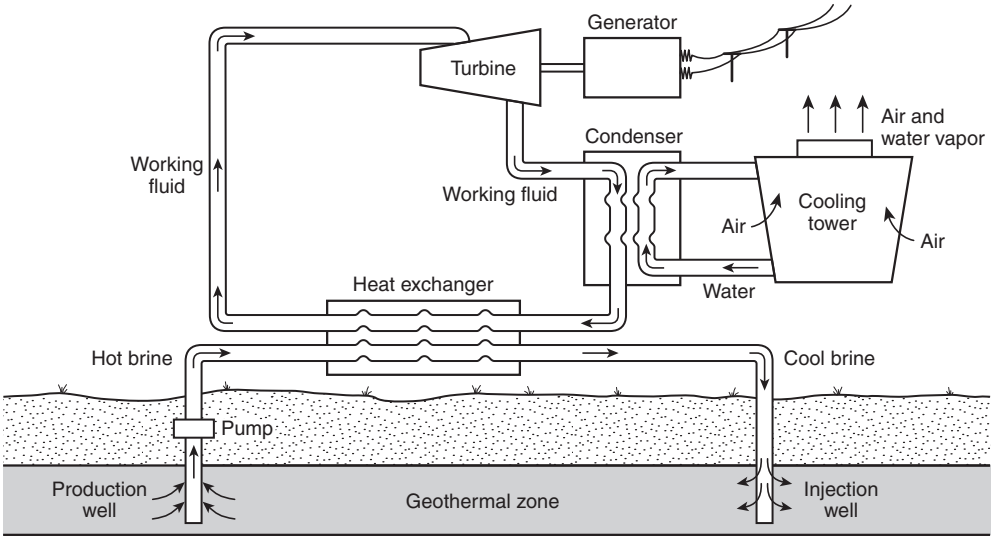

FIGURE A.12.2.1(c) Binary Cycle Geothermal Power Plant. ***(Courtesy Idaho National Laboratory.)***

valves are installed on the closed-loop piping and set to operate to prevent overpressure in case of process upset or fire exposure. In early designs, multiple small generating units (energy converters) were used to make up a typical binary plant. For modern facilities, power is produced by a limited number of turbine generator sets.

Individual power units typically comprise the following:

(1) Pumps and piping for transfer of flammable organic fluid
(2) Expander turbine(s)/converter(s) and generator(s)
(3) Heat exchangers, cooling towers, or air-cooled condenser for providing the cycle heat sink

Special hazards include the accidental release of flammable liquid above its boiling point and the formation of a vapor cloud with the potential for a vapor cloud explosion and/or fire with damage to the following:

(1) Process equipment such as turbines/energy converters, heat exchangers, and other nearby process equipment such as motor control centers
(2) Storage tanks and piping for working fluids *[See Figure A.12.2.1(c).]*

A.12.3.1.1 NFPA standards containing guidance on spacing are NFPA 30, NFPA 58, NFPA 59, NFPA 59A, NFPA 80A, and API 752, *Management of Hazards Associated with Locations of Process Plant Buildings.*

A.13.1 IGCC plants typically use one of three partial oxidation reaction processes to produce synthesis fuel gas (syngas) for subsequent combustion in gas turbines. The three methods of gasification are moving bed, fluidized bed, and entrained. IGCC technology takes advantages of the efficiencies available via combined-cycle power generation, more readily available carbon-based fuels, and more economical compliance with emission standards. In the simplest of cases, as frequently seen in refineries, derivative gases or oils with adequate heating values are sent directly to a combustion turbine that, in turn, drives an electrical generator while its exhaust gases are sent to a heat recovery steam generator (HRSG) that produces steam to be used in a steam turbine generator. The HRSG design can include reheat and a selective catalytic removal (SCR) system, as are common in many power plants. Carbon-based products such as coal, residual oils, petroleum coke, waste sludge, biomass, et cetera., can be used as feedstock in the IGCC process. The feedstock is converted into a syngas to be used as fuel in the combustion turbine. This occurs in a gasification unit. A gasification unit operates in a manner very similar to a chemical processing plant.

Syngas conversion apparatus includes the following:

(1) *Moving bed gasifier.* Oxidant is introduced at the bottom of a bed of fuel and moves downward as it is consumed by the gasification reactions at the bottom. Coal is introduced through a lockhopper at the top. These gasifiers produce tars and oils, a special hazard for plants with these types of gasifiers, because of both fire and personnel exposure to carcinogens.
(2) *Circulating fluidized bed gasifier.* Circulating fluidized-bed combustors use higher air flows to entrain and move the bed material, and nearly all of the bed material is continuously recirculated with adjacent high-volume hot cyclone separators. This approach simplifies feed design, extends the contact between the sorbent and flue gas, reduces the likelihood of heat exchanger tube erosion, and improves sulfur dioxide capture and combustion efficiency. This is the most appropriate design for use with lower-quality fuels such as biomass, lignite, and sub-bituminous coal.
Some later designs include a topping combustor in which fuel gas is combusted to add energy to the combustor's flue gas. More advanced designs can include a pressurized carbonizer that converts feed coal into fuel gas and char. The char is then burned to produce steam while the fuel gas from the carbonizer is routed through a topping combustor.
(3) *Entrained gasifier.* Another approach to converting a fuel to syngas is the use of a gasifier in which prepared feedstock is reacted with a substoichiometric amount of air or oxygen at high temperature [more than 2300°F (1260°C)] and moderate pressure in a reducing atmosphere. The gasification process produces a syngas product that is mostly carbon monoxide and hydrogen, with smaller

Copyright 2015 National Fire Protection Association (NFPA). Licensed, by agreement, for individual use and download on June 24, 2015 to LEADER AND READER for designated user PATTARAPORN SRITRAKOOL. No other reproduction or transmission in any form permitted without written permission of NFPA. For inquires or to report unauthorized use, contact licensing@nfpa.org.

quantities of carbon dioxide. For air-fired gasifiers, there is also a significant quantity of nitrogen in the resulting syngas. Entrained gasifiers are typically tall refractory-lined cylindrical vessels into which the prepared fuel is fed along with oxygen or air. Ash runs down the refractory-lined walls to a quench tank. The hot gas produced in the gasifier is then cooled in a syngas cooler. This cooler can be incorporated into the gasifier design, or it can be a stand-alone unit. In many designs, the cooling medium is water/steam that is changed to superheated steam in the cooler and then used in the power plant steam cycle or for other support functions in a refinery.

A.13.3 General Design. Depending on the plant design, a number of different IGCC support systems will be included in addition to the combined-cycle power plant, including the following:

(1) *Fuel Preparation.* In any IGCC facility, the feedstock fuel will have to be readied for use and delivered to the gasifier. Various types of feedstock could require heating, mixing, drying, etc., and will be delivered to the gasifier by various means.
(2) *Air Separation.* If oxygen is used for combustion in the gasifier, an air separation unit will typically be needed unless, in a refinery or air products process environment, the oxygen can be made available from another process. Air separation design choices are based on how many products are desired, required product purities, gaseous product delivery pressures, and whether or not products will be produced in liquid form. In most modern applications, cryogenic processes are used for air separation. In such facilities, air separation will involve large gas compressors, numerous pressure vessels, and specially designed heat exchangers and refrigeration cycles. For non-cryogenic processes, large gas compressors and numerous pressure vessels will still be found. In either case, the products are oxygen, nitrogen, and argon. Depending on the degree of integration between the air separation plant and other parts of the host facility, these products can be used in many different ways (e.g., nitrogen as a diluent in the fuel gas to the combustion turbine) or stored for commercial sales.
(3) *Fuel Gas Treatment.* In addition to being cooled, the fuel gases leaving the gasifier will be cleaned or treated before being directed to the combustion turbines to remove remaining particulates and trace contaminants. This is a significant advantage of the IGCC methodology, as environmental pollutants are removed prior to the gas being burned.
(4) *Mercury Removal.* Mercury is most typically removed by passing the fuel gas through towers containing activated carbon. Such processes can remove 90 to 95 percent of mercury in the syngas.
(5) *Sulfur Removal (often referred to as acid removal system or ARS).* A number of technologies are being investigated for the removal of sulfur compounds. The compounds are removed by either a physical solvent process or a chemical solvent process. The former allows a higher degree of sulfur removal while also being more effective in removing carbonyl sulfide (COS) and enhances the ability to add an ammonia-based SCR system at the back end for NOx control. In such systems, a COS hydrolysis reactor is employed in which the COS reacts with water in the presence of a catalyst to form carbon dioxide and hydrogen sulfide. A scrubber removes ammonia, hydrogen sulfide, and carbon dioxide. Solvents used can be amines or other combustible fluids. Refrigerated Selexol or Rectisol are common choices for removal of sulfur compounds and the selected capture of CO_2. Rectisol is basically methanol at –40°F (–40°C) operating at high pressure (up to 1000 psi [68 atm]), so there will be the possibility of jet fires that can spread to adjacent equipment. Also, acid gas removal units are likely to have refrigeration systems that use hazardous gases such as propane, propylene, or ammonia as refrigerant.
(6) *Contaminant Recovery.* Depending on plant design, the remaining plant equipment will vary, based on which of the contaminants will be used in other processes (as in a refinery) or recovered for commercial purposes. As an example, the hydrogen sulfide removed from the syngas in the scrubber could be recovered as either elemental sulfur or as sulfuric acid.

A.13.9 The turbine is typically started on natural gas and then switched to syngas. Syngas has a substantially lower heating value than natural gas, requiring four to five times the volume of fuel to deliver the same rated power. The minimum energy necessary for ignition of hydrogen-laden fuels is greatly reduced, nearly an order of magnitude compared to typical hydrocarbon fuels.

Additionally, to increase the availability of the power plant as well as to provide for the relatively long time it takes to stabilize the gas production process with respect to startup and shutdown, a "startup" fuel (typically natural gas or fuel oil) is used for startup and shutdown of the combustion turbine(s). Where the syngas has independent piping to the combustor, a dedicated inert gas purge should be provided for the piping downstream of the syngas stop valve to prevent the release of unburned syngas into the turbine. This purge prevents possible re-ignition and/or explosion in the gas turbine. Where a common fuel piping system is used for delivering both syngas and a gaseous startup fuel to the combustor, the startup fuel will provide the necessary buffer to prevent unburned syngas from entering the turbine under normal operating conditions. However, in an emergency stop/trip situation, the shutdown occurs without a transfer to the startup fuel, which leaves syngas in the fuel delivery piping. Consequently, a small purging system is needed to avoid the potential for releasing unburned syngas into the turbine.

Modifications to the combustion turbine so as to use syngas for fuel must account for the increased fuel flow rate and flame spread rate in terms of combustion dynamics and mechanical loads on the turbine blading.

When an alternative fuel is employed for combustion turbine startup and shutdown, the requisite changes in combustion control need to be accounted for as well as the fire and explosion hazards presented by the alternative fuel, including any additional requirements for combustion system purging.

A.14.3.2 When fire heats air and introduces products of combustion into the air in tunnels and in underground hydroelectric plants, the ventilation conditions that existed while the air was cold are altered. Frictional resistance to flow of heated air containing products of combustion is much greater than frictional resistance to flow of cold air that does not contain products of combustion. In the event of mild heating, increased resistance to flow would decrease the rate of ventilation. Then, after the fire is contained and the air is cooled, the air and smoke could be evacuated. Therefore, considerations for the

Copyright 2015 National Fire Protection Association (NFPA). Licensed, by agreement, for individual use and download on June 24, 2015 to LEADER AND READER for designated user PATTARAPORN SRITRAKOOL. No other reproduction or transmission in any form permitted without written permission of NFPA. For inquires or to report unauthorized use, contact licensing@nfpa.org.

health and safety of people underground should cause the designers to increase the rate of evacuating hot air containing smoke. As the fire underground increases the temperature of the air, ventilation flow can be reversed. The cooler ventilating air can flow in one direction occupying much of the lower spaces of tunnels while plumes of heated air flow rapidly outward from the area of the fire beneath the tunnel ceiling in the opposite direction from, and above, the mass of cooler air. The designer should then consider the stratification of air flow, the numerous nodes or junctures between tunnels and shafts, the likely frictional resistances with and without fire, and the placement and capacities of the fans and firestops. Some useful information is available in the proceedings of Session XI, *Fires*, of the 2nd International Mine Ventilation Congress. The designer is advised to be thoroughly familiar with Chapter 41, Fire and Smoke Control, in the *ASHRAE Handbook*.

A.14.5.2.4 When areas or rooms are located beneath areas protected by CO_2 (or other extinguishing gases), consideration should be given in the design for the possible settling of the gas to lower levels and its effect on personnel who might be in these areas.

A.14.5.3.1 Fires occurring where a generator is in operation are caused by an electrical fault in the generator. Not all faults result in fire. Electrical protection should quickly isolate the generator following detection of a fault. Generator fires are low-frequency events. Fires occurring in generators with thermoplastic insulation (i.e., asphalt, cloth ribbon, polyester) have resulted in self-supporting fires. Damage and downtime have been reduced by the use of fire suppression systems. Fires in generators with thermoset insulation (i.e., fiberglass, epoxy resin) have been less frequent. Incidents have been reported where self-sustaining fire did not occur and operation of a fire suppression system did not result in reduction of damage. There have been other incidents where generator protection schemes failed to isolate the unit electrically (the unit remained energized). This fault energy was high enough to result in a self-sustaining fire. The operation of a fire suppression system limited damage and reduced the amount of time the generator was out of service.

A.15.3.2.1 If the Relay, SCADA, or RTU equipment is located in the main control room, fire partition barriers are not required for this equipment.

A.15.3.3.4 Control room operator fire emergency training should include, but not be limited to, the following:

(1) Station emergency grounding procedures
(2) Valve hall clearance procedures
(3) Electrical equipment isolation
(4) Timely communication of all fire events to the responding fire brigade and the fire department

A.15.3.4.5 Detectors used to accomplish VEWFD are listed as being capable of providing alarm initiation at threshold levels more sensitive than conventional smoke detectors. VEWFD can be accomplished using air sampling or spot detection equipment. Smoke detection that detects products of combustion below 0.5 percent per foot obscuration (generally from 0.003 to 0.2 percent per foot obscuration) is considered as VEWFD. The object is to detect smoldering or off-gassing typically generated from an overheating condition or from low energy fires. To achieve VEWFD, it is sometimes necessary to decrease the spacing of the sensing elements. In addition to area detection, sensing elements should be placed to monitor return air from the space being protected.

Conventional (or standard) smoke detectors commonly have a default setting from 2.5 percent to 2.8 percent per foot obscuration. Listing allows them a range of between 0.5 percent and 4 percent per foot obscuration.

A.16.7.3 The highest water demand should be determined by the hazards present at the stage of construction, which might not correspond with the highest water demand of the completed plant. The water supply should be sufficient to provide adequate flow and pressure for hose connections at the highest elevation.

A.16.8.1 Mobile fire-fighting equipment can be utilized to provide necessary first aid fire-fighting equipment.

A.17.4.1.2 Inspection intervals for unattended plants can be permitted to be extended to normal plant inspections.

A.17.4.4 Emergency conditions can warrant that breathing apparatus be readily available in the control room. Self-contained breathing apparatus should be considered for activities outside the control room.

A.17.4.5.3 Recommendations contained in NFPA 600 and 29 CFR 1910, Subparts E and L should be consulted for additional information.

Annex B Sample Fire Report

This annex is not a part of the recommendations of this NFPA document but is included for informational purposes only.

B.1 Figure B.1 is one example of a typical fire report to be used by the fire brigade after an incident.

B.2 The fire report should be reviewed to determine if the event would be useful as input to the Fire Protection Design Basis Document. For example, could the impact of the event have been mitigated by the design, or did the design meet the Fire Hazard Control objectives *(see 1.2.2)*?

Annex C Fire Tests

This annex is not a part of the recommendations of this NFPA document but is included for informational purposes only.

NOTE: Numbers in brackets refer to the reference list at the end of Annex C.

C.1 Introduction. This annex summarizes the results of fire tests in which automatic sprinklers or water spray systems were used to extinguish or control fires in oil and grouped cables. Also included in this annex are results of tests conducted on fiberglass stack liners.

C.2 Combustible Oil Fire Tests.

C.2.1 General. Oils (except for crude oil) handled in bulk in power stations are limited to combustible liquids that lend themselves to control and extinguishment by water-type protective systems.

In order to ensure satisfactory results on such fires, the system design should take into account the physical nature of the expected fire, which will take one or more of three forms: a pressure jet or spray, a three-dimensional rundown of burning fuel over equipment and structures, or a spill or pool of fuel.

Copyright 2015 National Fire Protection Association (NFPA). Licensed, by agreement, for individual use and download on June 24, 2015 to LEADER AND READER for designated user PATTARAPORN SRITRAKOOL. No other reproduction or transmission in any form permitted without written permission of NFPA. For inquires or to report unauthorized use, contact licensing@nfpa.org.

SAMPLE FIRE REPORT

Name of company: _____

Date of fire: _____ Time of fire: _____ Operating facility: _____

Under construction: _____

Plant or location where fire occurred: _____

Description of facility, fire area, or equipment (include nameplate rating) involved: _____

_____

_____

Cause of fire, such as probable ignition source, initial contributing fuel, equipment failure causing ignition, etc.:

_____

_____

_____

Story of fire, events, and conditions preceding, during, and after the fire: _____

_____

_____

_____

Types and approximate quantities of portable extinguishing equipment used: _____

_____

_____

_____

Was fire extinguished with portable equipment only? _____ Public fire department called? _____

Employee fire brigade at this location? _____ Qualified for incipient fires? _____

For interior structural fires? _____

Was fixed fire extinguishing equipment installed? _____

Type of fixed extinguishing system: _____

Automatic operation: _____ , manually actuated: _____ , or both: _____

Specific type of detection devices: _____

Did fixed extinguishing system control? _____ and/or extinguish fire? _____

Did detection devices and extinguishing system function properly? _____

If no, why not? _____

_____

Estimated direct damage due to fire: $ _____ , or between $ _____ and $ _____

Estimated additional (consequential) loss: $ _____ Nature of additional loss: _____

_____

Estimated time to complete repairs/replacement of damaged equipment/structure: _____

Number of persons injured: _____ Number of fatalities: _____

What corrective or preventive suggestions would you offer to other utilities that might have similar equipment, structures, or extinguishing systems? _____

_____

_____

Submitted by: _____ Title: _____

© 2014 National Fire Protection Association NFPA 850

FIGURE B.1 Example of a Fire Report.

Copyright 2015 National Fire Protection Association (NFPA). Licensed, by agreement, for individual use and download on June 24, 2015 to LEADER AND READER for designated user PATTARAPORN SRITRAKOOL. No other reproduction or transmission in any form permitted without written permission of NFPA. For inquires or to report unauthorized use, contact licensing@nfpa.org.

Fire experience with liquid fires in power stations confirms that a fire frequently displays multiple characteristics. A turbine-generator fire frequently originates as a spray fire at a bearing with burning oil running down to lower levels of the station where a spill or pool fire results. Similarly, a leak at an oil-fired boiler produces a spray fire with burning oil running down the boiler wall to a lower floor. A hydraulic oil leak on a fan drive likewise combines spray fire and spill fire characteristics.

A protective system is expected to control or extinguish a liquid fire, as well as provide exposure protection for the structure and equipment in the vicinity of the fire. The oil fire tests summarized in C.2.2 indicate that complete extinguishment of pressure jet or spray fires can be difficult to achieve at any practical application density. The tests also show that spill or pool fires can be controlled, and equipment and structures in the general area protected, with area sprinkler protection operating at moderate densities [0.15 gpm/ft^2–0.20 gpm/ft^2 (6.1 mm/min–8.1 mm/min)]. Where the probable location of spray fires can be identified (e.g., exposed pipe runs without guard pipe or specific items of equipment), high-velocity directional spray nozzles of open or fused type operating at applied densities of approximately 0.25 gpm/ft^2 (10.2 mm/min) can radically limit the damage area resulting from a jet or spray fire.

The design specifics for water protective systems should be covered by the Fire Protection Design Basis Document based on the conditions existing in a particular plant.

C.2.2 Tests. Limited fire testing has been conducted to develop design criteria for fire suppression systems for lubricating oil fires.

C.2.2.1 The first series of tests were conducted by the Factory Mutual Research Corporation in 1957 under the sponsorship of the U.S. Atomic Energy Commission. [1] These tests included large spill fires [up to 2100 ft^2 (195 m^2)], with ceiling heights similar to those found in turbine building lower elevations [35 ft (10 m)]. The tests showed that oil spill fires could be extinguished and structural damage held to a minimum with automatic sprinklers at ceiling level delivering a discharge density as low as 0.13 gpm/ft^2 (5.3 mm/min). Also included is the result of one oil spray fire test. This test showed that ceiling level sprinklers were unsuccessful at extinguishing the spray fire even with discharge densities up to 0.36 gpm/ft^2 (14.7 mm/min). It further showed that damage caused by flame impingement of an oil spray fire on a structural column might not be prevented by ceiling sprinkler protection at a 0.36 gpm/ft^2 (14.7 mm/min) density.

These pool fire tests involved a ¼ in. (6.35 mm) deep pool of oil with normal building ventilation. Following the results of the testing described in C.2.2.3 in a larger building with better ventilation, it is believed that the results of the pool fire tests described above cannot be considered conclusive. It is believed the pool fires were oxygen limited with the result that a lower sprinkler density was needed to extinguish the fire.

C.2.2.2 A series of tests conducted in Finland in 1979 by a committee of insurance companies and utility companies showed similar results. [2] These tests on oil spray and pool fires indicated the difficulty of extinguishing oil spray fires. Densities of up to 0.66 gpm/ft^2 (26.89 mm/min) from automatic sprinklers 10 ft (3.05 m) overhead were unable to extinguish the spray fire. Water spray systems using high-velocity and medium-velocity spray nozzles were also tested on spray fires up to 1.0 gpm/ft^2 (40.7 mm/min). These tests showed the importance of nozzle placement in covering the entire oil spray to suppress a spray fire. Since the location and direction of an oil leak that could result in a spray fire is not readily predictable, the emphasis of water spray system design must be on area cooling to minimize fire damage rather than extinguishment of the spray fire. Tests showed that a density of 0.30 gpm/ft^2 (12.2 mm/min) provided adequate cooling.

The Finnish tests also included pool fires in a collection pan of approximately 130 ft^2 (12.08 m^2), 1 ft (0.30 m) deep. These tests showed that even distribution of 0.18 gpm/ft^2 (7.3 mm/min) could extinguish an oil pool fire.

The difference in densities for oil pool fires between the two test series might be the result of test conditions. The Finnish test series involved a 12 in. (30.48 cm) deep pool of oil with ventilation rates of 75,000 cfm (2,123 m^3/min) to enable filming of the test.

C.2.2.3 Tests were conducted by FM Global in 2004. [7] The test configuration included a turbine pedestal measuring 15 ft wide × 20 ft long × 18 ft high (4.6 m × 6 m × 5.5 m), with a 7.5 ft (2.3 m) grated walkway extending along one edge and an adjacent lube oil tank with a dike surrounding the tank. Twenty-three full-scale tests were conducted in the FM Global large burn laboratory. Initially, they were intended as demonstration tests to show clients potential fire risks. However, early in the planning process, the scope of the effort was expanded to include a research component. Spray fire, three-dimensional fire, and pool fire testing was conducted using various fire protection systems. Mineral oil was used with a flash point of 261°F (127°C) and a 19,080 Btu/lb (44,345 kJ/kg) heat of combustion.

Ten spray fire tests were conducted. Lube oil was pumped through a nozzle under pressure at a rate of 20 gpm (75.7 L/min). The spray fire under free burn conditions generated a heat-release rate of 40 MW. The nozzle was located above the lube oil tank and directed toward the ceiling. Protection used included ceiling sprinkler protection only and local protection near the spray: 8 × 10 (2.4 × 3.0 m) spacing with fusible link heads and 5 × 5 ft (1.5 × 1.5 m) spacing with open head sprinklers. The open head sprinkler arrangement used sprinklers with four different K factors (2.6, 5.6, 8.0, 11.2 gpm/psi ½) located 6 ft (1.8 m) above the spray. Ceiling temperatures during spray fires reached 1500°F (816°C) without sprinkler protection and slightly less with ceiling sprinklers. Closed head sprinklers on 8 × 8 ft (2.4 × 2.4 m) spacing did not operate during the spray fire portion of the test. Open head sprinklers on 5 × 5 ft (1.5 × 1.5 m) spacing with a K factor of 8.0 and a discharge pressure of 50 psi (3.5 bar) or greater did not extinguish but seemed to be most effective in controlling temperatures from the spray fires. This protection arrangement reduced gas temperatures at the ceiling from a maximum of 1500°F (816°C) to below 400°F (204°C).

Two three-dimensional fires were conducted. A flowing fire simulating a leak at a fitting on the turbine operating floor was ignited and allowed to flow off the platform into a pan on the ground floor. The flow rates varied from 6.0 to 10.5 gpm (22.7 to 39.7 L/min). Automatic sprinkler protection was provided below the operating floor and below the grated walkway around the turbine. Automatic sprinkler protection did not control the three-dimensional component but appeared to limit the size of the pool fire on the ground floor.

Copyright 2015 National Fire Protection Association (NFPA). Licensed, by agreement, for individual use and download on June 24, 2015 to LEADER AND READER for designated user PATTARAPORN SRITRAKOOL. No other reproduction or transmission in any form permitted without written permission of NFPA. For inquires or to report unauthorized use, contact licensing@nfpa.org.

Eleven pool fire tests were conducted and compared with the results of another pool fire test with sprinklers at a higher elevation. Tests were conducted with below the turbine pedestal with lube oil contained in a 81 ft^2 (7.5 m^2) pan. Sprinkler protection was about 15 ft (4.6 m) above the oil surface. Densities of 0.20 and 0.30 gpm/ft^2 (12 and 18 mm/min) were used. Closed head and open head sprinkler protection was used. Pool fires were most reliably extinguished by sprinklers with a density of 0.30 gpm/ft^2 (12 L/min · m^2). Another pool fire test series was conducted at 30 ft (9.1 m). [8] It was found at an elevation of 30 ft (9.1 m) above the oil surface that a density of 0.40 gpm/ft^2 (16 mm/min) was needed to extinguish a pool fire. It was concluded that sprinkler density needed depends on height above the pool fire.

C.3 Fire-Resistant Fluid.

C.3.1 General. In the United States, less-flammable hydraulic fluids have been used in the control oil systems of larger turbines for a number of years. In the countries formerly part of the U.S.S.R., these fluids are used for both the control oil and the lubrication oil systems of steam turbines. Loss experience where this information is available (U.S.) has been good. Incidents involving less hazardous hydraulic fluids have resulted in relatively minor fires causing little damage. In one instance, a utility indicated that a 1 in. (2.5 cm) diameter leak occurred in a control oil system with fluid sprayed onto a 1000°F (538°C) surface. A small fire resulted that was easily extinguished with a light water spray. Operators were able to isolate the line with no property damage and a 1-hour delay in startup. Plant personnel estimated that if mineral oil was involved under the same conditions, a severe fire would have occurred with no possibility of the operators accessing the area to isolate the leak, which would have resulted in major fire damage and an extended outage.

C.3.2 Tests. One of the listing organizations for less-flammable fluids conducts the following two tests to qualify less-flammable hydraulic fluids for listing. In both tests, the fluid is heated to 140°F (60°C) and discharged through an oil burner–type, 80 degree hollow cone spray nozzle at 1000 psi (6.7 MPa). The tests are as follows:

(1) *Hot Surface Ignition Test.* The fluid is sprayed onto a steel channel heated to 1300°F (704°C). The spray is directed onto the heated surface for 60 seconds from a distance of 6 in. (15.2 cm). If ignition occurs, the spray pattern is directed away from the hot surface to an open area. Local burning on the channel is acceptable. It is not acceptable if flame follows the spray pattern to the open area.
(2) *Flame Propagation Test.* A propane torch is used to ignite the spray 6 in. (15.2 cm) and at 18 in. (44.7 cm) from the nozzle. Ten tests are conducted at each location, with the torch flame moved through the spray pattern. It is not acceptable if the spray burns longer than 5 seconds after the torch is removed from the spray pattern in any of the 20 tests.

C.4 Grouped Cable Fire Tests.

C.4.1 General. The fire hazard presented by grouped cables depends on the number of trays in a given area, arrangement of trays (vertical vs. horizontal), type of cable used, arrangement of cable in the tray, and the type of tray (ladder vs. solid bottom). The tests indicated that water could penetrate densely packed ladder cable trays arranged six trays high, and although fire propagation could be limited in the horizontal direction, it would probably involve the entire array in the vertical direction. A 0.30 gpm/ft^2 (12.2 mm/min) design density from ceiling sprinklers was effective. However, lower densities were not tried on full-scale tests.

C.4.2 Tests. Three fire test programs have been carried out using water to extinguish grouped cable fires. All tests involved polyethylene insulated, PVC-jacketed cable in ladder-type cable trays. The first series of tests was carried out by a group of insurance companies in Finland in 1975. [3] The tests involved protection of cables in a 6½ ft× 6½ ft × 65 ft (1.98 m × 1.98 m × 19.82 m) long enclosure similar to a cable tunnel. Six cable trays were located along each side of the tunnel.

Protection consisted of 135°F (57.2°C) rated sprinklers spaced 13 ft (4 m) apart at ceiling level. A 0.40 gpm/ft^2 (16.3 mm/min) density was used for the sprinkler system. The tests showed the ability of a sprinkler system to prevent horizontal fire spread in the group of six trays where the fire started and to protect cables on the opposite wall of the tunnel.

The second series of tests was carried out by the Central Electricity Generating Board of the United Kingdom in 1978. [4] The purpose was to compare the effectiveness of a deluge system activated by heat detection wire with a fusible link actuated automatic sprinkler system.

Cable trays were arranged six trays high and two trays wide (12 trays). The water spray system was activated by a 160°F (71.1°C) rated heat detector wire. The wire was installed 9 in. (22.86 cm) above each cable tray and along the center of the bottom tray. Spray nozzles were positioned at 10 ft (3.05 m) intervals at ceiling level in the aisle between cable tray arrays. The automatic sprinkler system was located directly above the cable tray array with sprinkler heads spaced 10 ft (3.05 m) apart.

This test series showed that both protection systems could control a fire involving grouped cable. The water spray system responded faster with less fire damage to cable. The water spray system limited damage to cables in one or two trays. The sprinkler system limited damage to six to nine trays.

The third test program was conducted by the Factory Mutual Research Corporation under the sponsorship of the Electric Power Research Institute. [5]

One phase of the tests studied the ability of a ceiling sprinkler system to control a fire in a cable tray array. Cable trays were arranged six trays high and two trays wide with a number of vertical cable trays in the space between. The test was carried out in a room 40 ft × 40 ft× 20 ft (12.20 m × 12.20 m × 6.10 m) high. Protection consisted of 160°F (71.1°C) rated sprinklers on 10 ft × 10 ft (3.05 m× 3.05 m) spacing at ceiling level. A 0.30 gpm/ft^2 (12.2 mm/min) density was used. Ionization detectors were provided at ceiling level.

Where sprinklers actuated, from one to three sprinklers opened to control the fire. Fire propagated the entire height of vertical trays but could be contained within the 8 ft (2.44 m) length of most of the horizontal trays. Cable was damaged in most of the trays. Ionization detectors responded within 21 to 25 seconds.

C.5 Stack Liner Fire Tests.

C.5.1 General. Tests were conducted on four fire-retardant fiberglass-reinforced plastic liners by Factory Mutual Research Corporation. [6] The liners were 3 ft (0.91 m) in diameter and 30 ft (9.15 m) long. They were suspended vertically above a 10 ft^2 (0.93 m^2) pan containing 3 in. (7.62 cm) of heptane. The liners were exposed to this ignition source for 2½ minutes, at which time the pan was removed.

Copyright 2015 National Fire Protection Association (NFPA). Licensed, by agreement, for individual use and download on June 24, 2015 to LEADER AND READER for designated user PATTARAPORN SRITRAKOOL. No other reproduction or transmission in any form permitted without written permission of NFPA. For inquires or to report unauthorized use, contact licensing@nfpa.org.

C.5.2 Tests. Results were similar with all four materials tested. There was an initial moderate temperature rise due to the heat input from the heptane fire, a leveling off of temperature prior to involvement of the plastic, then a very rapid temperature increase caused by heat contribution from the burning liner, another leveling off during a period of active liner burning, then a decrease in temperature coincident with removal of the exposure fire. From a review of the test data, it appeared that once burning of the liner started, fire spread over the surface was almost instantaneous. Temperatures at different elevations in the liner interior reached 1000°F (537.8°C) almost simultaneously in each test.

C.6 Transformer Oil Containment Fire Tests. Containment systems are intended to confine and drain liquid released from a transformer in the event of a leak or a fault that ruptures the transformer casing. The containment system consists of a pit located below and extending out some distance from liquid-containing components of the transformer. In the early stage of the incident the pressure increase that results in failure of the transformer can result in liquid blown beyond the pit area. The larger the surface area of the pit, the more liquid will be captured. The pit should be equipped with a drain or pump to prevent rainwater buildup. The volume of the pit is typically sized to contain the contents of liquid in the transformer and the maximum expected discharge of water from the fixed water spray protection system and hose stream on the transformer for 10 minutes. The majority of pits used are rock-filled. Open pits are also used.

Rock-filled pits contain rock large enough in size to allow liquid to drain down through the bed and small enough to prevent propagation of fire into the pit. A size that is recommended by the IEEE for substations is 1.5 in. (3.8 cm) or larger (washed and uniformly sized) stone. This corresponds to size No. 2 by ASTM D 448, *Standard Classification for Sizes of Aggregate for Road and Bridge Construction*. The volume of the pit is calculated based on the void space of the rock. Void space is a percentage of the volume of the pit that is available for containment. The void space typically is 30 percent to 40 percent of the volume of the pit. Open pits are constructed such that the volume of the pit is available for containment of liquid. The transformer can be mounted on a pedestal in the pit or it can be supported on steel beams that span the walls of the basin. The concern with this design is that it does not provide fire suppression. A fire exposing support steel could result in failure of the steel, dropping the transformer into the pit. Some facilities' utilities have provided an automatic sprinkler system for this area. Alternatively, a layer of rock can be located at the top of the pit to act as a flame arrester and prevent burning oil from entering the pit. Testing was conducted to determine the following: the minimum rock depth, above an open pit, needed to extinguish an insulating liquid fire, the burning rate of oil above a rock surface compared to that above a compacted surface, the depth that a fire would burn before being extinguished by a rock bed, and the drainage rate of insulating oil through a rock bed. Tests were conducted with trap rock and 1½ in. (3.8 cm) washed stone, which is a fractured rock with a size range as follows: 33.8 percent by weight retained on a 1 in. (2.5 cm) screen, 47.6 percent retained on a ¾ in. (1.9 cm) screen, 15.7 percent retained on a ½ in. (1.3 cm) screen, and 2.2 percent by weight retained on a ¼ in. (0.6 cm) screen. Trap rock is a fractured rock with a size range as follows: 6.5 percent retained by a 2 in. (5.1 cm) screen, 21.0 percent retained by a 1½ in. (3.8 cm) screen, 39.9 percent retained by a 1 in. (2.5 cm) screen, 26.0 percent retained by a ¾ in. (1.9 cm) screen, 4.9 percent retained by a ½ in. (1.3 cm) screen, and 1.2 percent retained by a ¼ in. (0.6 cm) screen. The oil used in the tests was a standard transformer insulating liquid.

C.6.1 Minimum Rock Depth. The objective of this test was to determine, for open pit design containment systems, whether a layer of rock of a specific thickness sandwiched between steel grating, located near the top of the pit, would act as a flame arrester to prevent burning oil from entering the pit. For this test, burning transformer oil was flowed onto the rock surface under the test area and allowed to flow through the rock bed until burning oil was observed below the surface of the bed.

Both types of rock acted as a flame arrester for specific periods of time. The most effective was 1½ in. (3.8 cm) washed stone at a depth of 12 in. (30 cm), the maximum depth investigated, which prevented the passage of burning oil for 50 minutes. Trap rock at a depth of 12 in. (30 cm) prevented penetration of burning oil for 6 minutes to 10 minutes.

C.6.2 Depth Before Extinguishment. The objective of this test was to determine how far down into the rock bed the oil would go before the fire was extinguished, and whether there would be a change in burning rate as the depth of oil decreased to near the rock surface. This test was conducted with a rock depth of 12 in. (30 cm) and the initial oil level 2 in. (5.1 cm) above the level of the rock. The oil was ignited and allowed to burn down into the rock. While the oil level slowly receded into the rock bed as a result of controlled drainage from the bed, burning rate measurements and observations were made.

It was found that the heat release rate remained essentially unchanged while the level of oil was above the mean rock surface level (MRSL). MRSL is defined as the level at which 50 percent of the oil surface area is broken by rocks. As the level of oil dropped below the MRSL there was a decrease in heat release rate. The fire was extinguished at approximately 1 in. (2.5 cm) below the MRSL or approximately 2 in. (5.0 cm) below the top of the rock bed.

C.6.3 Drainage Rate. The objective of this test was to determine the drainage rate of oil through the rock bed. Oil drained from a 3 ft (0.9 m) diameter steel pan through a 4 ft (1.2 m) high, 12 in. (30.5 cm) diameter steel pipe containing the rock under test. Flow was measured at different oil temperatures. It was found that the oil flow rates for 1½ in. (3.8 cm) washed stone ranged from 120 gpm/ft^2 to 140 gpm/ft^2 (4.9 m/min to 6.1 m/min). The oil flow rates for trap rock were 150 gpm/ft^2 to 170 gpm/ft^2 (6.1 m/min to 6.9 m/min).

These drainage rates are valid for any depth bed where the pit is designed for the contents of the liquid in the transformer. Where the pit is smaller in size than the volume of oil in the transformer and drainage is to an oil-water separator or a remote containment pit, the drainage rate must be determined based on hydraulic head and head losses. The head loss through the rock bed can be neglected, but the head loss in the entry from the rock bed to the drain pipe can be large, unless rock is restricted from a region out to a radius of 1.5 pipe diameters from the center of the opening. If not, the design should take into account the flow restriction of the rock near the pipe entry. The effectiveness of a containment system depends on how well it is maintained. It is believed that oil will be thrown beyond the pit area when the transformer casing fails. However, in a well-designed and maintained pit, most of the liquid released should flow into the pit with oil burning on the top and sides of the transformer casing. Containment systems

Copyright 2015 National Fire Protection Association (NFPA). Licensed, by agreement, for individual use and download on June 24, 2015 to LEADER AND READER for designated user PATTARAPORN SRITRAKOOL. No other reproduction or transmission in any form permitted without written permission of NFPA. For inquires or to report unauthorized use, contact licensing@nfpa.org.

are subject to accumulation of windblown dirt and dust as, for example, in the southwest areas of the U.S. Dust accumulations can also occur near facilities where dusts are generated. If containment systems are not cleaned frequently, they will not be effective in containing the oil released. For open pit containment systems, where rock is to be used as a flame arrester, 1½ in. (3.8 cm) washed stone or size No. 5 rock per ASTM D448, *Standard Classification for Sizes of Aggregate for Road and Bridge Construction,* is most effective. For rock-filled containment pits, trap rock or size No. 24 rock would be most effective due to its greater void space and higher drainage rates. Containment systems are intended to confine fluid released in a transformer incident. The liquid volume in the transformer requiring a containment system depends on type of fluid used. If mineral oil is used, it is assumed that following a transformer failure it will ignite and burn as a pool fire on the ground around the transformer. If the ground slopes towards a building or towards other equipment or if the transformer volume exceeds 500 gal (1.9 m^3), containment is recommended. If a listed less flammable fluid is used, cleanup of the fluid is the primary concern. The size of the transformer needing containment can be increased to 1320 gal (5 m^3).

C.7 References.

(1) "Fire Tests of Automatic Sprinkler Protection for Oil Spill Fires," Factory Mutual Research Corp., September 9, 1957.
(2) "Sprinkler and Water Spray Tests on Turbine Oil Fires," Industrial Mutual Insurance Co., December 1979.
(3) "Sprinkler Tests in a Cable Duct (Tunnel) in Rautaruukki Oy's Factory in Raahe," Industrial Mutual Insurance Co., 1975.
(4) "Report on the Performance of Fire Fighting Equipment Utilizing Water Spray When Initiated by Heat Detecting Cable," Central Electricity Generating Board, February 1978.
(5) "Fire Tests in Ventilated Rooms Extinguishment of Fire in Grouped Cable Trays," Electric Power Research Institute, EPRI NP-2660, December 1982.
(6) "Tests of Candidate Glass Fiber-Reinforced Stack Liner Materials," Factory Mutual Research Corporation, July 1975.
(7) Technical Report ID 0003018250, "Turbine Fire Protection," C. Wieczorek, FM Global, April 2004.
(8) Technical Report ID 003013258, "Investigation into Protection of Flammable Liquids in Large Plastic Totes—Phases I and II," R. Dean, FM Global, December 2004.

Annex D Loss Experience

This annex is not a part of the recommendations of this NFPA document but is included for informational purposes only.

D.1 Emergency Shutdown Loss Experience. This section describes fire experience where lubricating oil supply was shut down more rapidly than normal, either intentionally or accidentally. Lubricating oil was shut off at 0 rpm for fire No. 1, at 1000 rpm for fire No. 2, from 1000 rpm to 1400 rpm for fire No. 3, and in excess of 3000 rpm for fire No. 4.

D.1.1 Fire No. 1. In August 1989, a 640 MW(e) five casing, double reheat machine with inlet steam pressure at a gauge pressure of 3675 psi (25,339 kPa) and 1000°F (537.8°C) was operating normally when a fire was discovered near the main lube oil tank. Unsuccessful attempts were made to manually fight the fire when control cable burned through and control and throttle valves started to close. At 6 minutes, the ac lube oil pump started. The operator sent an assistant to vent hydrogen from the generator and purge with carbon dioxide. A valve was then manually operated to break condenser vacuum. This action resulted in reducing the coast-down time to 30 minutes from 45 minutes to 60 minutes. When the shaft stopped rotating, the operator took the unit off turning gear and shut down the ac and emergency dc oil pumps. The fire department and plant fire brigade quickly controlled the fire with one 2½ in. (6.4 cm) and one 1½ in. (3.8 cm) hose stream.

There was no damage to the bearings as a result of the shutdown. A runout check indicated that measured clearances were well within tolerance. Steel beams supporting the operating floor sagged from 2 in. (5 cm) to 3 in. (7.6 cm) over a 1500 ft^2 (138 m^2) area in front of the front standard. Cable, in trays near the fire area, was damaged. The action taken by the operator resulted in substantially reduced damage to the turbine and the building and was credited with substantially reducing the length of time the turbine was out of service. The turbine was put back on turning gear about 26 days after the fire. The operating floor could be reinforced, and the unit operated until the next scheduled outage.

D.1.2 Fire No. 2. In July 1987, a 35 MW(e) single flow, double automatic extraction, condensing machine with inlet steam pressure at a gauge pressure of 1250 psi (8618 kPa) and 900°F (482°C) was operating normally while millwrights attempted to clean the oil cooler tubes on one of the two oil coolers. During the cleaning process, one of the tubes dropped out of the tube sheet and oil was ejected vertically at about 40 psi (275.8 kPa) through a ⅝ in. (1.6 cm) opening in the tube sheet. The oil spray ignited off a steam stop valve overhead. Approximately 20 ceiling sprinklers and 16 spray nozzles directly below the operating floor opened. Oil mist and droplets passed up through a 6 in. (15.2 cm) wide opening between the operating floor and the wall and burned above the operating floor. Approximately 15 minutes into the fire, fearing building collapse, the ac driven lubricating oil pumps were shut off. The fire intensity decreased noticeably. Approximately 15 minutes later (30 minutes into the fire) the dc pump was shut down with the turbine turning at approximately 1000 rpm. The oil fire was quickly extinguished.

The main shaft bearings were wiped, and the thrust bearing was destroyed. There were indications of minor rubbing at the high pressure end, and hangars for the main steam stop valve were cracked. There was little evidence of high temperatures in the basement area, due to the effect of the automatic sprinkler protection. However, there was a large amount of deformed structural steel above the operating floor, on the wall, and at roof level.

D.1.3 Fire No. 3. In January 1989, a 12.5 MW(e) condensing, double automatic extraction turbine with inlet steam pressure at a gauge pressure of 475 psig (3275 kPa) and 750°F (400°C) was operating normally when maintenance personnel discovered a drip-sized leak at an elbow on the control oil piping. Control room personnel were notified, and since they had difficulty reducing load, they tripped the unit by opening the breaker. A fire started in the vicinity of the hydraulic cylinder. There was no fixed protection provided, and personnel attempted to fight the fire with hand extinguishers and hose streams without success. Two minutes after the fire started, with the machine turning at between 1100 rpm and 1400 rpm, the operator was ordered to stop the main and emergency oil

Copyright 2015 National Fire Protection Association (NFPA). Licensed, by agreement, for individual use and download on June 24, 2015 to LEADER AND READER for designated user PATTARAPORN SRITRAKOOL. No other reproduction or transmission in any form permitted without written permission of NFPA. For inquires or to report unauthorized use, contact licensing@nfpa.org.

pumps. Approximately 150 gal (568 L) of oil were lost before pumps were stopped. The fire department responded 4 minutes after the fire started and using one 2½ in. (6.4 cm) and two 1¾ in. (4.4 cm) hose lines brought the fire under control 23 minutes after it started.

There was damage to turbine bearings, and the shaft ends were scored. In addition all control wiring under the turbine shroud was burned, and there was damage to gauges, indicators, and controls mounted in the turbine shroud. Structural steel was warped at the roof of the building. Repairs to the turbogenerator were estimated at two to three weeks.

D.1.4 Fire No. 4. In February 1988, two 660 MW(e) units were operating at 550 and 530 MW(e), respectively. The units were end to end. Power and control cable for the lube oil pump motors for both machines were located above a control valve servomotor enclosure for one of the units. Piping to the enclosure was guarded and contained control oil at a gauge pressure of 250 psi (1724 kPa). A leak occurred in the control oil piping within the guard pipe. The turbine tripped automatically. Oil flooded the guard pipe and backed up into the servomotor enclosure, igniting in the vicinity of the main steam stop valves. The fire damaged power and control cable for both machines, shutting down ac and dc oil pumps for both units. Both machines were rotating in excess of 3000 rpm at the time lube oil was lost.

Extensive repairs were needed to mill bearing surfaces and to straighten and balance the shafts on both units. One machine was out of service for approximately 3 months, the other for 5 months.

D.2 Other Loss Experience. The loss experiences discussed in this section were provided through the cooperation of various utilities/generating station owners, and others, and are intended to assist users of this recommended practice in understanding the type of incidents that can occur and the rationale for some of the recommendations. It is intended that this section will be expanded in future editions, as more loss details become available to the technical committee. This section is not intended to be a complete listing of all types of fires and explosions that can occur or have occurred.

D.2.1 Combined Cycle Plant — Distributed Control System (DCS). This fire incident occurred in the United States in 2008 at a combined cycle generating plant with two 52 MW gas turbines. These units have 10-minute quick-start capabilities used for peaking. The fire was limited to the DCS (printed circuit boards and wiring insulation). It was not verified if the fire was from a lightning strike power surge or a short between the 120 volt dc power conductors and 24 volt control wiring that shared the same conduit. There was no fire detection or suppression in the DCS building. The fire self-extinguished and was not discovered for several hours. Damage amount was approximately $600,000 for property damage, and the outage lasted 44 days.
Lessons Learned: Protecting electrical equipment with a smoke detection system is recommended in Section 7.8 of NFPA 850. The document also suggests that the detectors alarm to a constantly attended area. Had this DCS building been protected with a smoke detection system that alarmed to the occupied control room, the operations staff would have responded during the event and might have reduced the impact of the fire. With no detection, several hours passed before the incident was discovered.

D.2.2 Coal Plant — Lubricating Oil. This loss occurred in 2008 and involved an IP turbine on one 1325 MW base load unit at a coal-fired plant. An oil leak occurred in the turning gear casing flange. The oil leaked down the side of the casing onto the steam pipe insulation. The hot steam pipe heated the oil to flash point and a fire occurred. The unit tripped due to the oil leak and fire. The fire was extinguished using a micelle encapsulant and handlines. There was very limited physical damage to the insulation and miscellaneous electrical equipment, and the property damage loss was estimated at $85,000. However, the unit downtime was 8 days.

D.2.3 Coal Plant — Conveyor Gallery. This incident occurred in the United States in 2001 at an 800 MW western coal–fired power plant. A small pile of coal accumulated on the floor of the conveyor gallery and spontaneously ignited. The heat from the fire ignited the bottom belt. A deluge system activated by spot heat detection operated just about the time the belt broke. There was no further fire spread. Property damage was estimated at about $100,000. There was no plant outage because a secondary coal path was used.
Lessons Learned: Keep things clean; do not let coal spills sit too long.

D.2.4 Coal Plant — Electrical Switchgear. This incident occurred in the United States in 2002 at a 2× 250 MW coal-fired unit. An electrical failure in a switchgear panel caused a fire. The fire was extinguished by de-energizing the panel and using portable extinguishers. Property damage was estimated at about $100,000. There was no unit outage because power was able to be rerouted.
Lessons Learned: Test and maintain switchgear; use infrared scanning to detect potential problems.

D.2.5 Coal Plant — Pulverizer. This incident occurred in the United States in 2003 at a 2× 250 MW coal-fired plant. A hot spot developed inside a coal pulverizer during an outage. This hot spot ignited the coal dust when the pulverizer was restarted. Some duct work was damaged, resulting in a property damage loss of about $41,000. The fire was extinguished using a manual water spray system inside the pulverizer.
Lessons Learned: Make sure all coal accumulations are cleaned out of any equipment that handles or uses coal during any outage.

D.2.6 Combined Cycle Plant — Air Intake Filters. This incident occurred in the United States in 2005 in a natural gas–fired combined cycle gas turbine. The unit was in outage, and work was being done in the air intake filter plenum. A contractor's halogen lamp was unintentionally placed against the paper filter media. Heat from the lamp ignited the filter. The fire was extinguished by the local paid fire department; however, the filters were destroyed and the heat from the fire warped the enclosure. This resulted in an extended outage lasting several months and a property damage loss of about $1,000,000.
Lessons Learned: Be very careful with portable heat-producing devices.

D.2.7 Coal Plant — Conveyor. This fire occurred in the United States in 2007 at a 2 × 150 MW coal-fired plant. A hot roller on a coal conveyor ignited coal dust (western coal), resulting in a small fire on the conveyor. The automatic deluge system operated quickly (the fire originated very close to a detector) and extinguished the fire. There was minimal damage to the conveyor, with property damage estimated at about $5,000. No outage resulted.
Lessons Learned: Maintain conveyor rollers; keep galleries clean; test and maintain fire protection systems.

Copyright 2015 National Fire Protection Association (NFPA). Licensed, by agreement, for individual use and download on June 24, 2015 to LEADER AND READER for designated user PATTARAPORN SRITRAKOOL. No other reproduction or transmission in any form permitted without written permission of NFPA. For inquires or to report unauthorized use, contact licensing@nfpa.org.

D.2.8 Coal Plant — Conveyor. A fire loss occurred in 2006 at a two-unit coal-fired plant located in the United States. The plant has a total rated output of over 300 MW and has been operational since the early 1960s.

This fire occurred on a main coal conveyor supplying coal to the plant. There are several conveyors on the system; however, only one conveyor was involved. The coal conveyors had manually operated open head deluge systems. A thermal line–type detection system had been installed, but the system was not operational.

The cause of the fire was spontaneous combustion, friction, or a combination of the two, involving a buildup of coal between the table top of the conveyor, the idlers, and the conveyor belt. The fire occurred late in the evening, and high winds from a strong evening thunderstorm were a factor in the fire's development. The conveyor belt ignited and was basically the only combustible material involved. There was no coal on the belt because fueling operations had ended earlier that afternoon.

There were six conveyor sections that were installed from the crusher house up to the tripper floor of the plant. Three conveyor sections were destroyed beyond repair but did stay in place and did not collapse. The conveyor support steel and enclosure suffered severe heat damage and were severely warped and twisted. Since no detection was available, the fire was discovered by a plant employee late that night during the storm. The local fire department was called for assistance, and they extinguished the conveyor fire with hose streams. A dry pipe sprinkler system, which had been installed on the tripper floor several years earlier, operated and prevented further fire spread into the plant. Property damage to the plant conveyor systems, including demolition, removal, and new work, was approximately $2,600,000. This did not include loss of generation costs associated with the outage. Emergency provisions were incorporated to supply coal to the plant, and the plant was in an outage for almost 2 weeks.

After the conveyor sections were replaced, new automatic deluge systems with protection above and underneath the conveyor belt line were installed using dry pilot detection systems. The remaining manual fire protection systems protecting the other conveyor lines that were not involved in the fire were also replaced with new deluge systems.

Lessons Learned: Maintenance issues with belt cleaning, upgraded automatic fire protection systems, and fire protection testing/maintenance programs were identified as major improvements that would perhaps mitigate any future loss events similar to this one.

D.2.9 Gas/Oil Plant — Generator/Exciter. This fire incident occurred in 2002 in the United States at a conventional steam generating plant with gas-/oil-fired units. The event began with immediate and severe machine vibration involving the exciter enclosure bearing and the two generator bearings. The first indication of trouble was high vibration alarms in the control room along with alarms indicating exciter high temperature and loss of excitation. It is estimated that the fire started within 10 to 15 seconds following unit vibration alarm activation. The unit is provided with vibration alarms to the control room but was not equipped with high vibration trips.

Plant operators observed a fire involving the generator/exciter end of the unit. The local full-time fire department was immediately notified. In addition to shutting down the unit after an automatic turbine trip due to an electrical fault, employees secured the unit's hydrogen system. It is estimated that the unit was shut down and the hydrogen system secured within 3 to 4 minutes. It is estimated that it took approximately 12 minutes for the unit to coast down. The incident involved both a pressurized hydrogen fire and lubricating oil fire.

The steam turbine generator was an outside unit positioned on an open-sided, elevated, concrete pedestal with two open-sided, concrete-on-steel levels beneath the steam turbine generator. Both levels beneath the unit were fully protected by properly designed wet-pipe sprinklers; the steam turbine generator bearings were not provided with automatic sprinkler protection.

The initial fire was a hydrogen/lubricating oil torch–type fire at unit bearing level. It is estimated that the hydrogen/lube oil fire spread throughout the generator enclosure and also down to the mezzanine level. Following securing of the hydrogen system, the lubricating oil fire involved the mezzanine level beneath the generator/exciter section. It is estimated that approximately 15 to 20 sprinkler heads operated on this level containing and extinguishing the fire. Some lubricating oil spread from the mezzanine level to the first floor level through openings in the mezzanine floor. Approximately four sprinkler heads operated on the first, or ground, level beneath the generator/exciter section.

The unit fire was contained and extinguished by a combination of plant emergency operations (manually shutting down the unit, securing the hydrogen system, and securing the lubricating oil systems) and proper automatic sprinkler protection on both levels beneath the steam turbine generator. It is estimated that the fire was extinguished within 20 minutes. The local fire department responded; however, the fire was contained and extinguished by the time they arrived.

The exciter was completely destroyed and had to be replaced. Other damage involved the aforementioned bearings and seals. Fire damage was limited to the cabling and wiring above and at the turbine deck level. Proper operation of the below-deck sprinkler system prevented any damage from occurring on the mezzanine and grade levels; only cleanup operations were required. Total damages exceeded $10 million.

D.2.10 Coal Plant — Conveyor. A fire loss occurred in 2004 at a one-unit coal-fired plant located in the United States. The coal-fired plant has a total rated output of over 450 MW and has been operational since the early 1980s.

This fire incident occurred on an inclined coal conveyor supplying coal to a storage silo. There are several conveyors on the system; however, only one conveyor was involved. The fused head sprinklers had operated at the initial point of the fire; however, the fire moved up the conveyor ahead of the sprinkler system.

The cause of the fire could not be determined. It started at the top of the belt tensioner housing. It is assumed that hot embers fell into the tensioner area, eventually igniting the belt. The belt burned, and the fire spread up the conveyor galley. The tensioner structure acted as a chimney, aiding in combustion. The fire occurred early in the afternoon, and the conveyor belt was the only combustible material involved. The conveyor was not in operation, and there was no coal on the belt. Fueling operations had ended earlier that morning.

All fire detection systems worked as designed. The control room received an alarm, and an operator was sent to investigate. Once the fire was confirmed, the local fire department was called and all electrical systems were shut down. Due to the fire moving up the conveyor ahead of the sprinklers, it was not immediately extinguished. The fire continued up the con-

Copyright 2015 National Fire Protection Association (NFPA). Licensed, by agreement, for individual use and download on June 24, 2015 to LEADER AND READER for designated user PATTARAPORN SRITRAKOOL. No other reproduction or transmission in any form permitted without written permission of NFPA. For inquires or to report unauthorized use, contact licensing@nfpa.org.

veyor galley until hoses and sprinklers could be manually applied at the top, or head, of the conveyor.

Approximately 450 ft (137 m) of the conveyor system was damaged beyond repair. This included tables, electrical equipment, fire protection equipment, and conveyor belting. The conveyor support steel and enclosure suffered slight heat damage. Some steel siding and roof sections had to be replaced. No support structure was replaced.

Property damage to the plant conveyor systems, including demolition, removal, and new work was approximately $760,000. This did not include loss of generation costs associated with reduced load operation or emergency provisions to supply coal to the plant.

After the conveyor was replaced, an engineering study was initiated to recommend improvements to the fire protection and dust suppression systems.

D.2.11 Combined Cycle Plant — Control Oil. In 2004, in Turkey, a control oil fire incident occurred inside a steam turbine enclosure at a 791 MW combined cycle power plant that had begun operation in 2002. The steam control valves and turbine-lubricating systems utilize a turbine-grade mineral oil that is supplied from a common reservoir. Control oil pressure is normally at 40 bar. High vibration caused by a natural frequency mismatch broke a union in the IP control valve actuator piping, spraying oil, which ignited in a large fireball almost immediately. The ignition source was in contact with hot surfaces around the bearings. The fire activated the pre-action automatic sprinkler system that protected the turbine bearings. Manual fire fighting was also dispatched. Normally noncombustible insulation in the IP section became oil-soaked, resulting in a deep-seated fire, but did not spread to the rest of the equipment within the enclosure. The control oil flow was automatically shut down by pressure drop, which helped to limit the fire and the extent of damage. No injuries were recorded.

The detection and extinguishing systems were designed to protect the limited area directly over the STG bearings. However, the high pressure spray fire involved a much larger area and activated six detectors almost simultaneously, and burned cables, detectors, and sirens. It is believed that short circuits occurred on the detection loop and power supply to the sirens, causing loss of battery and ac power for the alarm control panel. Signaling and alarm function failures occurred, but the pre-action system solenoid operated automatically and alarms were recorded. The panel functioned properly after ac power was restored.

Property damage was approximately $1,000,000 and resulted in a 25-day shutdown of the unit. Following the fire, all unions on the IP control valve actuator piping were re-engineered and replaced by the manufacturer. Two additional leg supports were provided for the actuators.

D.2.12 Combined Cycle Plant — Main Transformer Failure and Fire. In 2006 at a 520 MW combined cycle plant in the United States, a sudden fault occurred within a 250 MVA generator step-up (GSU) transformer. The fault initiated in the H3 550 kV bushing due to breakdown of the condensing bushing insulation located inside the transformer tank. The plant was off-line at the time of the fault, but all three GSU transformers were energized. The bushing fault caused the internal pressure of the tank to build up, which blew the cover off of one of the 550 kV bushing wells. Burning transformer oil then poured out through the opening, resulting in a fireball reaching 20 ft (6.1 m) above the top of the transformer. Each of the three GSUs is protected by relaying and by an individual automatic deluge system designed to provide a density of 0.25 gpm/ft^2 (10.2 mm/min) over the entire surface of the transformer, plus 0.15 gpm/ft^2 (6.1 mm/min) over the surrounding containment dike. Fire walls are also provided to isolate the transformers from other GSUs and auxilliary units. The relays tripped the transformer breakers, and the deluge system for the GSU activated automatically. The deluge system could not extinguish the fire but helped to cool and protect the transformer. The fire departments had been notified immediately, and the first units arrived within 7 minutes. Approximately 9 minutes after the initial bushing rupture, a second bushing exploded due to heat, resulting in a more intense fire. Fire fighters began spraying water and foam, and the fire was extinguished about 15 minutes later.

After the fire, personnel noted severe damage to the H3 bushing. Flying debris from H3 had also caused damage to the H2 bushing and surge arrester porcelins. Gaskets, cable insulation, wireways, and control cabinet were destroyed. Initial testing of the GSU windings, after the incident, found the winding insulation in relatively good condition, although there was evidence of some contamination due to debris and carbonized oil. There was no evidence of mechanical movement in the winding, no loose blocking, and no distortion of the tank. The deluge system, fire walls, good space separation, relay actuation, and swift action by operator and fire departments helped to limit damage to just the affected transformer and its ancillary equipment. All fire-protection water discharge was captured in the site detention pond.

The value of excellent prefire planning and operator response, per the plant's Emergency Action and Facility Response Plans, was also demonstrated in this incident.

D.2.13 Hydroelectric Plant Generator. In 2006, a generator fire occurred at a 1272 MW hydroelectric generating plant in Canada. Internal arcing occurred in a 106 MW generator used for base load and export power. Fuel for the fire was the electrical insulation. The generator was protected with smoke detection and a water deluge system. The ignition source was an electrical fault caused by the fracture of a stator top core clamping finger that fractured and exited from under the core clamping plate and bounced through the air gap. This resulted in electrical short circuits between the core and the windings and ignited the circuit ring bus and asphalt-insulated windings. The generator tripped by unit differential and split phase protection. Smoke detection operated and the water deluge system tripped, which extinguished the fire.

Physical damage was $1.2 million, which included 53 out of 600 stator coils that were severely damaged, in addition to several rotor field poles. The cost of lost production due to the outage was $7.8 million.

This incident illustrates the benefit of providing automatic deluge protection for generator windings with insulation that does not self-extinguish when de-energized.

Annex E Fire Protection Design Basis Document

This annex is not a part of the recommendations of this NFPA document but is included for informational purposes only.

E.1 Information. The Fire Protection Design Basis Document should contain the following information:

(1) Plant name
(2) Plant location

Copyright 2015 National Fire Protection Association (NFPA). Licensed, by agreement, for individual use and download on June 24, 2015 to LEADER AND READER for designated user PATTARAPORN SRITRAKOOL. No other reproduction or transmission in any form permitted without written permission of NFPA. For inquires or to report unauthorized use, contact licensing@nfpa.org.

(3) Fire protection engineer
(4) Table of contents (a general outline, which is not all-inclusive)
(5) Stakeholders
(6) General fire protection philosophy (e.g., passive versus active protection)
(7) Assumptions
(8) Site-specific information (e.g., environmental conditions)
(9) Source documents (e.g., adopted codes, standards, regulations, insurance requirements)
(10) Plant layout (e.g., hazard separation, fire barriers, drainage)
(11) Water supply (e.g., fire pump(s) and tank, underground mains, hydrants)
(12) Hazards (e.g., transformers, turbine lube oil, fuels, storage, cooling towers)
(13) Operational and administrative controls (e.g., items covered in Chapter 17)

E.2 Organization and Detail. Where compliance to NFPA 850 is clear, only a brief description is needed. Where there is deviation from NFPA 850 guidance, more detail is required regarding the fire risk evaluation and decision process.

The following is a general heading index for an NFPA 850 Fire Protection Design Basis Document:

(1) Executive summary
(2) Stakeholder goals and objectives (4.2.2)
(3) Assumptions, if applicable
(4) Project description (4.3.2)
(5) Codes and standards (4.3.1)
(6) General arrangement/plant layout (5.1)

Fire areas, fire barriers/openings, hydrogen, transformers

(1) Life safety (5.2)
(2) Building construction materials (5.3)
(3) Smoke and heat venting (5.4)
(4) Containment and drainage (5.5)
(5) Emergency lighting
(6) Lightning protection
(7) General fire protection (Chapter 6)

Water supply, pumps, tanks, underground, hydrants, standpipes, fire alarm systems, etc.

(1) Hazard protection (Chapters 7 through 14)

Annex F Informational References

F.1 Referenced Publications. The documents or portions thereof listed in this annex are referenced within the informational sections of this recommended practice and are not part of the recommendations of this document unless also listed in Chapter 2 for other reasons.

F.1.1 NFPA Publications. National Fire Protection Association, 1 Batterymarch Park, Quincy, MA 02169-7471.

NFPA 12, *Standard on Carbon Dioxide Extinguishing Systems*, 2015 edition.

NFPA 13, *Standard for the Installation of Sprinkler Systems*, 2013 edition.

NFPA 30, *Flammable and Combustible Liquids Code*, 2015 edition.

NFPA 54, *National Fuel Gas Code*, 2015 edition.

NFPA 55, *Compressed Gases and Cryogenic Fluids Code*, 2013 edition.

NFPA 56, *Standard for Fire and Explosion Prevention During Cleaning and Purging of Flammable Gas Piping Systems*, 2014 edition.

NFPA 58, *Liquefied Petroleum Gas Code*, 2015 edition.

NFPA 59, *Utility LP-Gas Plant Code*, 2015 edition.

NFPA 59A, *Standard for the Production, Storage, and Handling of Liquefied Natural Gas (LNG)*, 2013 edition.

NFPA 80A, *Recommended Practice for Protection of Buildings from Exterior Fire Exposures*, 2012 edition.

NFPA 85, *Boiler and Combustion Systems Hazards Code*, 2015 edition.

NFPA *101®*, *Life Safety Code®*, 2015 edition.

NFPA 497, *Recommended Practice for the Classification of Flammable Liquids, Gases, or Vapors and of Hazardous (Classified) Locations for Electrical Installations in Chemical Process Areas*, 2012 edition.

NFPA 600, *Standard on Facility Fire Brigades*, 2015 edition.

NFPA 850, *Recommended Practice for Fire Protection for Electric Generating Plants and High Voltage Direct Current Converter Stations*, 2000 edition.

NFPA 1561, *Standard on Emergency Services Incident Management System and Command Safety*, 2014 edition.

F.1.2 Other Publications.

F.1.2.1 ANSI Publications. American National Standards Institute, 25 West 43rd Street, 4th Floor, New York, NY 10036.

ANSI A14.3, *Standard for Safety Requirements for Fixed Ladders*, 1984.

ANSI A1264.1, *Safety Requirements for Workplace Floor and Well Openings, Stairs, and Railing Systems.*

F.1.2.2 API Publications. American Petroleum Institute, 1220 L Street, NW, Washington, DC 20005-4070.

API 752, *Management of Hazards Associated with Locations of Process Plant Buildings*, 1995.

F.1.2.3 ASHRAE Publications. ASHRAE, 1791 Tullie Circle, N.E., Atlanta, GA 30329-2305.

ASHRAE Handbook — Fundamentals, Chapter 41, Fire and Smoke Control, 2013.

F.1.2.4 ASTM Publications. ASTM International, 100 Barr Harbor Drive, P.O. Box C700, West Conshohocken, PA 19428-2959.

ASTM D 448, *Standard Classification for Sizes of Aggregate for Road and Bridge Construction*, 2003.

F.1.2.5 BNSF Publications. Coal Business Unit, Burlington Northern and Santa Fe Railway, P.O. Box 961051, Fort Worth, TX, 76161-0051.

Guide to Coal Mines Served by Burlington Northern and Santa Fe Railway, 2013.

F.1.2.6 CGA Publications Compressed Gas Association, 4221 Walney Road, 5th Floor, Chantilly, VA 20151-2923.

CGA G-5.6, *Hydrogen Pipeline Systems*, 2005.

F.1.2.7 EPRI Publications. Electric Power Research Institute, 3420 Hillview Avenue, Palo Alto, CA 94304.

EPRI Research Project 1843-2, *Turbine Generator Fire Protection by Sprinkler System*, July 1985.

F.1.2.8 IEEE Publications. IEEE, Three Park Avenue, 17th Floor, New York, NY 10016-5997.

Copyright 2015 National Fire Protection Association (NFPA). Licensed, by agreement, for individual use and download on June 24, 2015 to LEADER AND READER for designated user PATTARAPORN SRITRAKOOL. No other reproduction or transmission in any form permitted without written permission of NFPA. For inquires or to report unauthorized use, contact licensing@nfpa.org.

ANSI/IEEE 484, *Recommended Practice for Installation Design and Installation of Vented Lead-Acid Batteries for Stationary Applications*, 2002.

ANSI/IEEE 979, *Guide for Substation Fire Protection*, 1994.

F.1.2.9 NIST Publications. National Institute of Standards and Technology, 100 Bureau Drive, Gaithersburg, MD, 20899-3460.

Technical Note 1423, "Analysis of High Bay Hanger Facilities for Fire Detection Sensitivity and Placement," February 1997.

F.1.2.10 PRB Coal Users' Group Publications. The Powder River Basin Coal User's Group, c/o The Tradefair Group, Inc., 11000 Richmond, Suite 690, Houston, TX 77042.

Coal Bunker, Hopper and Silo Fire Protection Guidelines.

F.1.2.11 U.S. Government Publications. U.S. Government Printing Office, Washington, DC 20402.

Title 29, Code of Federal Regulations, Part 1910, Subparts E and L.

F.1.2.12 Other Publications. "Fire Tests in Ventilated Rooms Extinguishment of Fire in Grouped Cable Trays," Electric Power Research Institute, EPRI NP-2660, December 1982.

"Fire Tests of Automatic Sprinkler Protection for Oil Spill Fires," Factory Mutual Research Corp., September 9, 1957.

Second International Mine Ventilation Congress, Society of Mining Engineers of American Institute of Mining, Metallurgical, and Petroleum Engineers, 1980.

"Report on the Performance of Fire Fighting Equipment Utilizing Water Spray When Initiated by Heat Detecting Cable," Central Electricity Generating Board, February 1978.

"Sprinkler and Water Spray Tests on Turbine Oil Fires," Industrial Mutual Insurance Co., December 1979.

"Sprinkler Tests in a Cable Duct (Tunnel) in Rautaraukki Oy's Factory in Raahe," Industrial Mutual Insurance Co., 1975.

Technical Report ID 0003018250, "Turbine Fire Protection," C. Wieczorek, FM Global, April 2004.

Technical Report ID 003013258, "Investigation into Protection of Flammable Liquids in Large Plastic Totes — Phases I and II," R. Dean, FM Global, December 2004.

"Tests of Candidate Glass Fiber-Reinforced Stack Liner Materials," Factory Mutual Research Corporation, July 1975.

F.2 Informational References. (Reserved)

F.3 References for Extracts in Informational Sections. (Reserved)

Copyright 2015 National Fire Protection Association (NFPA). Licensed, by agreement, for individual use and download on June 24, 2015 to LEADER AND READER for designated user PATTARAPORN SRITRAKOOL. No other reproduction or transmission in any form permitted without written permission of NFPA. For inquires or to report unauthorized use, contact licensing@nfpa.org.

Index

Copyright © 2014 National Fire Protection Association. All Rights Reserved.

The copyright in this index is separate and distinct from the copyright in the document that it indexes. The licensing provisions set forth for the document are not applicable to this index. This index may not be reproduced in whole or in part by any means without the express written permission of NFPA.

-A-

Administration ..... Chap. 1
Application 1.3
Equivalency 1.4
Purpose 1.2
Scope 1.1
Units 1.5
Alternative Fuels
Definition 3.3.1
Alternative Fuels ..... Chap. 9
Application of Chapters 4 through 7, 16, and 17 ..... 9.2
Biomass Fuels 9.5
Explosion Protection 9.5.5
Fire Protection 9.5.4
General 9.5.1
Plant Arrangement 9.5.2
Prevention of Fires and Explosions in Biomass Units 9.5.3
Indoor Storage 9.5.3.2
Outdoor Storage 9.5.3.1
General 9.1
Boiler Feed Equipment 9.1.3
Fire Protection 9.1.5
Plant Arrangement 9.1.2
Prevention of Fires and Explosions 9.1.4
Mass Burn Fuels 9.3
Explosion Suppression 9.3.4
Fire Protection 9.3.3
The MSW Storage Pit, Charging Floor, and Grapple Laydown Areas 9.3.3.2, A.9.3.3.2
General 9.3.1
Plant Arrangement 9.3.2
Other Alternative Fuels and Processes 9.7
Refuse Derived Fuels (RDF) 9.4
Explosion Suppression 9.4.5
Fire Protection 9.4.4
Interlocks 9.4.4.1, A.9.4.4.1
General 9.4.1
Plant Arrangement 9.4.2
Prevention of Fires and Explosions in RDF Units 9.4.3
Rubber Tires 9.6
Explosion Protection 9.6.4
Fire Protection 9.6.3
General 9.6.1
Initial Receiving and Storage Areas 9.6.2
Approved
Definition 3.2.1, A.3.2.1
Assets Protection 1.2.2.2
Authority Having Jurisdiction (AHJ)
Definition 3.2.2, A.3.2.2

-B-

Biomass
Definition 3.3.2
Business Interruption 1.2.2.3

-C-

Combustible
Definition 3.3.3
Combustible Material
Definition 3.3.4
Compressed Air Foam (CAF)
Definition 3.3.5

-D-

Definitions ..... Chap. 3

-E-

Environmental Protection 1.2.2.4
Explanatory Material ..... Annex A

-F-

Fast Depressurization System
Definition 3.3.6
Fire Area
Definition 3.3.7
Fire Barrier
Definition 3.3.8
Fire Loading
Definition 3.3.9
Fire Point
Definition 3.3.10
Fire Prevention
Definition 3.3.11
Fire Protection
Definition 3.3.12
Fire Protection Design Basis Document ..... Annex E
Fire Protection Design Process ..... Chap. 4
Fire Protection Design Basis Document (Deliverables) 4.5
Fire Protection Design Basis Process 4.4
General 4.1
Inputs to the Design Process 4.3
General Inputs 4.3.1
Project-Specific Inputs 4.3.2
Stakeholders 4.2
Fire Protection for the Construction Site ..... Chap. 16
Administration 16.2
Construction Site Lay-Down Areas 16.5
Construction Warehouses, Shops, and Offices 16.4
Introduction 16.1
Manual Fire-Fighting Equipment 16.8
Site Clearing, Excavation, Tunneling, and Construction Equipment 16.3
Excavation and Tunneling 16.3.2
Construction Equipment 16.3.2.5
Site Clearing 16.3.1
Temporary Construction Materials 16.6
Underground Mains, Hydrants, and Water Supplies 16.7
General 16.7.1
Fire Rated Penetration Seal
Definition 3.3.13
Fire Risk Control Program ..... Chap. 17
Fire Protection Program 17.4
Emergency Response Personnel 17.4.5
Fire Emergency Plan 17.4.4, A.17.4.4
Impairments 17.4.2
Management of Change 17.4.3
Special Fire-Fighting Conditions 17.4.6
Cable Trays 17.4.6.4
Coal Pulverizers 17.4.6.7
Coal Storage and Handling 17.4.6.6
Electrostatic Precipitators 17.4.6.3
Hydrogen System 17.4.6.5
Regenerative Air Heaters 17.4.6.2
Turbine Lubricating Oil Fires 17.4.6.1

Copyright 2015 National Fire Protection Association (NFPA). Licensed, by agreement, for individual use and download on June 24, 2015 to LEADER AND READER for designated user PATTARAPORN SRITRAKOOL. No other reproduction or transmission in any form permitted without written permission of NFPA. For inquires or to report unauthorized use, contact licensing@nfpa.org.

Testing, Inspection, and Maintenance 17.4.1
Fire Risk Control Program..... 17.3
General..... 17.1
Identification of Fire Hazards of Materials..... 17.5
Management Policy and Direction..... 17.2
Fire Risk Evaluation
Definition 3.3.14
Fire Tests..... Annex C
Fluid
Definition 3.3.15
Fire-Resistant Fluid
Definition 3.3.15.1
Nonflammable Fluid
Definition 3.3.15.2
Fossil Fueled
Definition 3.3.16

-G-

General Fire Protection Systems and Equipment ..... Chap. 6
Fire Suppression Systems and Equipment— General Requirements 6.6
Fire Suppression System Safety Considerations..... 6.6.3
Fire-Signaling Systems..... 6.7
General 6.1
Portable Fire Extinguishers 6.5
Supply Mains, Yard Mains, Hydrants, and Building Standpipes..... 6.4
Hose Nozzles 6.4.3
Hose Threads 6.4.4
Standpipe and Hose Systems 6.4.2
Supply Mains, Yard Mains, and Hydrants..... 6.4.1
Valve Supervision..... 6.3
Water Supply 6.2
Fire Pumps 6.2.5
Water Supply Tanks..... 6.2.6
General Plant Design ..... Chap. 5
Building Construction Materials 5.3
Interior Finish..... 5.3.5
Containment and Drainage..... 5.5
Emergency Lighting..... 5.6
Life Safety..... 5.2
Lightning Protection 5.7
Plant Arrangement..... 5.1
Fire Area Determination 5.1.1
General Substation Arrangement 5.1.6
Hydrogen Storage 5.1.3
Indoor Transformers 5.1.5
Openings in Fire Barriers..... 5.1.2
Outdoor Oil-Insulated Transformers 5.1.4
Smoke and Heat Venting, Heating, Ventilating, and Air Conditioning 5.4
Normal Heating, Ventilating, and Air-Conditioning Systems..... 5.4.2
Smoke and Heat Venting..... 5.4.1
General 5.4.1.1
Heat Vents 5.4.1.2
Smoke Vents..... 5.4.1.3
Geothermal Power Plants..... Chap. 12
Application of Chapters 4 through 7, 16, and 17..... 12.2
Binary Plants 12.3
Fluids 12.3.3
Control of Leaking Flammable Fluids..... 12.3.3.3
Electrical 12.3.3.5
Process Structures Containing Flammable Fluids..... 12.3.3.1
Pumps and Piping for Flammable Fluids 12.3.3.2
Vapor Detection 12.3.3.4
Location..... 12.3.2
Risk Considerations 12.3.1
Fire Protection..... 12.4
General..... 12.1

-H-

High Voltage Direct Current (HVDC) Converter Station
Definition 3.3.17
High Voltage Direct Current (HVDC) Converter Stations ... Chap. 15
Application of Chapters 4 through 7, 16, and 17..... 15.2
General..... 15.1
HVDC Converter Stations 15.3
Fire Prevention 15.3.3
Fire Protection..... 15.3.4
General..... 15.3.1
Plant Arrangement..... 15.3.2

-I-

Identification and Protection of Hazards for Combustion Turbines and Internal Combustion Engines..... Chap. 8
Application of Chapters 4 through 7, 15, and 16 ..... 8.2
Combined Cycle Units 8.7
Heat Recovery Steam Generators 8.7.1
Steam Turbines 8.7.2
Combustion Turbine and Internal Combustion Engine Generators..... 8.5
Fire Protection for Combustion Turbines and Internal Combustion Electrical Generators 8.5.4
Automatic Sprinkler and Water Spray Systems..... 8.5.4.2
Compressed Air Foam Systems 8.5.4.7
Fixed Aerosol Fire Extinguishing Systems..... 8.5.4.8
General 8.5.4.1
High-Expansion Foam Systems..... 8.5.4.6
Localized Extinguishing Systems..... 8.5.4.5
Total Flooding Gaseous Systems 8.5.4.3, A.8.5.4.3
Total Flooding Water Mist Systems..... 8.5.4.4
General 8.5.1
Generators..... 8.5.6
Inlet Air System 8.5.5
Prevention of External Fires 8.5.3
Prevention of Internal Explosions in Combustion Turbines 8.5.2
Starting Equipment for CTs 8.5.7
Electrical Equipment..... 8.6
Control Enclosures 8.6.1
General 8.1
General Design and Equipment Arrangement..... 8.3
Unattended Facilities..... 8.4
Identification and Protection of Hazards for Hydroelectric Generating Plants..... Chap. 14
Application of Chapters 4 through 7 and 16 and 17 ..... 14.2
Cable Tunnels 14.6
Air Compressors..... 14.6.5
Hydraulic Systems for Gate and Valve Operators..... 14.6.6
Indoor Oil-filled Electrical Equipment..... 14.6.4
General..... 14.1
General Design and Equipment Arrangement 14.3
Identification and Protection of Hazards 14.5
Cable Concentrations..... 14.5.4
General..... 14.5.1
Generator Pit and Windings..... 14.5.3
Turbine-Generator Hydraulic Control and Lubricating Oil Systems 14.5.2
Hydraulic Control Systems 14.5.2.1
Unattended Facilities 14.4
Identification and Protection of Hazards for Integrated Gasification Combined-Cycle Generating Facilities ..... Chap. 13
Application of Chapters 4 through 7, 16, and 17..... 13.2
Control/Electrical Equipment Enclosures and Buildings..... 13.7
Emergency Response..... 13.4
General 13.1, A.13.1
General Design and Equipment Arrangement..... 13.3, A.13.3
IGCC Generating Facilities 13.5
Fire Protection..... 13.5.3

Copyright 2015 National Fire Protection Association (NFPA). Licensed, by agreement, for individual use and download on June 24, 2015 to LEADER AND READER for designated user PATTARAPORN SRITRAKOOL. No other reproduction or transmission in any form permitted without written permission of NFPA. For inquires or to report unauthorized use, contact licensing@nfpa.org.

General ... 13.5.1
Prevention of Fires in IGCC Facilities ... 13.5.2
Electrical ... 13.5.2.4
Oil Systems ... 13.5.2.3
Piping ... 13.5.2.1
Prevention of Internal Explosions in Combustion Turbines ... 13.9, A.13.9
Structures ... 13.6
Syngas Within Buildings and Enclosures ... 13.8
Identification and Protection of Hazards for Wind Turbine Generating Facilities ... Chap. 10
Application of Chapters 4 through 7 and 16 and 17 ... 10.2
Electrical Equipment Enclosures and Buildings ... 10.6
General ... 10.1
General Design and Equipment Arrangement ... 10.3
Unattended Facilities ... 10.4
Wind Generating Facilities ... 10.5
Fire Protection for Wind Generating Facilities ... 10.5.3
Compressed Air Foam Systems ... 10.5.3.4
Fixed Aerosol Fire Extinguishing Systems ... 10.5.3.5
General ... 10.5.3.1
Nacelle Fire Protection ... 10.5.3.6
Total Flooding Gaseous Systems ... 10.5.3.2
Total Flooding Water Mist Systems ... 10.5.3.3
General ... 10.5.1
Prevention of Fires in Wind Turbine Generating Facilities ... 10.5.2
Identification of and Protection Against Hazards ... Chap. 7
Auxiliary Equipment and Other Structures ... 7.9
Auxiliary Boilers ... 7.9.6
Cooling Towers ... 7.9.5
Emergency Generators ... 7.9.1
Fire Protection ... 7.9.1.2
Fire Pumps ... 7.9.4
Storage Rooms, Offices, and Shops ... 7.9.2
Warehouses ... 7.9.3
Electrical Equipment ... 7.8
Battery Rooms ... 7.8.5, A.7.8.5
Cable Spreading Room and Cable Tunnels ... 7.8.2
Control, Computer, and Communication Rooms ... 7.8.1
Grouped Electrical Cables ... 7.8.3
Substations and Switchyards ... 7.8.7, A.7.8.7
Switchgear and Relay Rooms ... 7.8.4
Transformers ... 7.8.6, A.7.8.6
Flue Gas ... 7.6
Activated Carbon Injection Systems ... 7.6.7
Effect of PAC on Fly Ash Properties ... 7.6.7.4
Fire Protection ... 7.6.7.5
General ... 7.6.7.1
Storage of Powdered Activated Carbon ... 7.6.7.3
Types of Powdered Activated Carbon ... 7.6.7.2
Conveyors Handling Noncombustible Material ... 7.6.6
Electrostatic Precipitators ... 7.6.4
Flue Gas Bag–Type Dust Collectors ... 7.6.3
Forced Draft, Induced Draft, and Flue Gas Recirculation Fans ... 7.6.1
Regenerative Air Heaters ... 7.6.2
Scrubbers, Scrubber Buildings, and Exhaust Ducts ... 7.6.5, A.7.6.5
General ... 7.6.5.1
Scrubber Buildings ... 7.6.5.2
Scrubbers ... 7.6.5.3
Fire Protection ... 7.6.5.3.3
Materials of Construction ... 7.6.5.3.1
Stacks ... 7.6.8
Fuel Handling — Coal ... 7.4
Bins, Bunkers, and Silos ... 7.4.2
Coal Conveying and Handling Structures ... 7.4.5
Coal Conveyors ... 7.4.4
Dust Suppression and Control ... 7.4.3, A.7.4.3
Fire Protection ... 7.4.6
Storage ... 7.4.1
Fuel Handling — Oil ... 7.3
Fire Protection ... 7.3.9
Fuel Handling — Gas ... 7.2
Inerting ... 7.2.4, A.7.2.4
Maintenance, Modification, and Repair ... 7.2.5, A.7.2.5
General ... 7.1
Fire Protection Operation ... 7.1.1
Steam Generator ... 7.5
Boiler Feed Pumps ... 7.5.3
Fire Protection ... 7.5.1
Pulverizers ... 7.5.2
Turbine-Generator ... 7.7
Fire Protection ... 7.7.4
Exciter ... 7.7.4.3
Hydrogen Seal Oil ... 7.7.4.4
Oil Storage Areas ... 7.7.4.5
Turbine-Generator Area ... 7.7.4.1
Turbine-Generator Bearings ... 7.7.4.2, A.7.7.4.2
Hydraulic Control System ... 7.7.2
Hydrogen System ... 7.7.1
General ... 7.7.1.1
Hydrogen Seal Oil Pumps ... 7.7.1.2
Lubricating Oil Systems ... 7.7.3
Informational References ... Annex F
Interior Finish
Class A Interior Finish
Definition ... 3.3.18.1
Class B Interior Finish
Definition ... 3.3.18.2
Definition ... 3.3.18

-L-

Labeled
Definition ... 3.2.3
Limited Combustible
Definition ... 3.3.19
Liquid
Combustible Liquid
Definition ... 3.3.20.1
Definition ... 3.3.20
Flammable Liquid
Definition ... 3.3.20.2
High Fire Point Liquid
Definition ... 3.3.20.3
Less Flammable Liquid
Definition ... 3.3.20.4
Listed
Definition ... 3.2.4, A.3.2.4
Loss Experience ... Annex D

-M-

Mass Burn
Definition ... 3.3.21
Municipal Solid Waste (MSW)
Definition ... 3.3.22

-N-

Noncombustible
Definition ... 3.3.23

-O-

Open Pits ... 5.5.6.2

-P-

Protection of Plant Personnel ... 1.2.2.1

Copyright 2015 National Fire Protection Association (NFPA). Licensed, by agreement, for individual use and download on June 24, 2015 to LEADER AND READER for designated user PATTARAPORN SRITRAKOOL. No other reproduction or transmission in any form permitted without written permission of NFPA. For inquires or to report unauthorized use, contact licensing@nfpa.org.

-R-

Rating
Definition 3.3.24
Fire Protection Rating
Definition 3.3.24.1
Fire Resistance Rating
Definition 3.3.24.2
Recommended Practice
Definition 3.2.5
Referenced Publications ..... Chap. 2
General 2.1
NFPA Publications 2.2
Other Publications 2.3
References for Extracts in Recommendations Sections 2.4
Refuse Derived Fuel (RDF)
Definition 3.3.25
Rock-Filled Pits 5.5.6.1

-S-

Sample Fire Report ..... Annex B
Should
Definition 3.2.6
Solar Thermal Power Generation ..... Chap. 11
Application of Chapters 4 through 7, 16, and 17 ..... 11.2
Fire Protection 11.5
General 11.1, A.11.1
Heat Transfer Fluid (HTF) 11.4
HTF Heater Protection 11.4.2
Pumps and Piping 11.4.1
Risk Considerations 11.3, A.11.3
Concentrated Solar Power 11.3.2, A.11.3.2
Photovoltaic (PV) Power 11.3.1, A.11.3.1
Stakeholder
Definition 3.3.26

Copyright 2015 National Fire Protection Association (NFPA). Licensed, by agreement, for individual use and download on June 24, 2015 to LEADER AND READER for designated user PATTARAPORN SRITRAKOOL. No other reproduction or transmission in any form permitted without written permission of NFPA. For inquires or to report unauthorized use, contact licensing@nfpa.org.

Sequence of Events for the Standards Development Process

As soon as the current edition is published, a Standard is open for Public Input

Step 1: Input Stage

- Input accepted from the public or other committees for consideration to develop the First Draft
- Committee holds First Draft Meeting to revise Standard (23 weeks)
  Committee(s) with Correlating Committee (10 weeks)
- Committee ballots on First Draft (12 weeks)
  Committee(s) with Correlating Committee (11 weeks)
- Correlating Committee First Draft Meeting (9 weeks)
- Correlating Committee ballots on First Draft (5 weeks)
- First Draft Report posted

Step 2: Comment Stage

- Public Comments accepted on First Draft (10 weeks)
- If Standard does not receive Public Comments and the Committee does not wish to further revise the Standard, the Standard becomes a Consent Standard and is sent directly to the Standards Council for issuance
- Committee holds Second Draft Meeting (21 weeks)
  Committee(s) with Correlating Committee (7 weeks)
- Committee ballots on Second Draft (11 weeks)
  Committee(s) with Correlating Committee (10 weeks)
- Correlating Committee First Draft Meeting (9 weeks)
- Correlating Committee ballots on First Draft (8 weeks)
- Second Draft Report posted

Step 3: Association Technical Meeting

- Notice of Intent to Make a Motion (NITMAM) accepted (5 weeks)
- NITMAMs are reviewed and valid motions are certified for presentation at the Association Technical Meeting
- Consent Standard bypasses Association Technical Meeting and proceeds directly to the Standards Council for issuance
- NFPA membership meets each June at the Association Technical Meeting and acts on Standards with "Certified Amending Motions" (certified NITMAMs)
- Committee(s) and Panel(s) vote on any successful amendments to the Technical Committee Reports made by the NFPA membership at the Association Technical Meeting

Step 4: Council Appeals and Issuance of Standard

- Notification of intent to file an appeal to the Standards Council on Association action must be filed within 20 days of the Association Technical Meeting
- Standards Council decides, based on all evidence, whether or not to issue the Standards or to take other action

Committee Membership Classifications[1,2,3,4]

The following classifications apply to Committee members and represent their principal interest in the activity of the Committee.

1. M *Manufacturer:* A representative of a maker or marketer of a product, assembly, or system, or portion thereof, that is affected by the standard.
2. U *User:* A representative of an entity that is subject to the provisions of the standard or that voluntarily uses the standard.
3. IM *Installer/Maintainer:* A representative of an entity that is in the business of installing or maintaining a product, assembly, or system affected by the standard.
4. L *Labor:* A labor representative or employee concerned with safety in the workplace.
5. RT *Applied Research/Testing Laboratory:* A representative of an independent testing laboratory or independent applied research organization that promulgates and/or enforces standards.
6. E *Enforcing Authority:* A representative of an agency or an organization that promulgates and/or enforces standards.
7. I *Insurance:* A representative of an insurance company, broker, agent, bureau, or inspection agency.
8. C *Consumer:* A person who is or represents the ultimate purchaser of a product, system, or service affected by the standard, but who is not included in (2).
9. SE *Special Expert:* A person not representing (1) through (8) and who has special expertise in the scope of the standard or portion thereof.

NOTE 1: "Standard" connotes code, standard, recommended practice, or guide.

NOTE 2: A representative includes an employee.

NOTE 3: While these classifications will be used by the Standards Council to achieve a balance for Technical Committees, the Standards Council may determine that new classifications of member or unique interests need representation in order to foster the best possible Committee deliberations on any project. In this connection, the Standards Council may make such appointments as it deems appropriate in the public interest, such as the classification of "Utilities" in the National Electrical Code Committee.

NOTE 4: Representatives of subsidiaries of any group are generally considered to have the same classification as the parent organization.

Copyright 2015 National Fire Protection Association (NFPA). Licensed, by agreement, for individual use and download on June 24, 2015 to LEADER AND READER for designated user PATTARAPORN SRITRAKOOL. No other reproduction or transmission in any form permitted without written permission of NFPA. For inquires or to report unauthorized use, contact licensing@nfpa.org.

Submitting Public Input / Public Comment through the Electronic Submission System (e-Submission):

As soon as the current edition is published, a Standard is open for Public Input.

Before accessing the e-Submission System, you must first sign-in at www.NFPA.org. *Note: You will be asked to sign-in or create a free online account with NFPA before using this system*:

a. Click in the gray Sign In box on the upper left side of the page. Once signed-in, you will see a red "Welcome" message in the top right corner.
b. Under the Codes and Standards heading, Click on the Document Information pages (List of Codes & Standards), and then select your document from the list or use one of the search features in the upper right gray box.

OR

a. Go directly to your specific document page by typing the convenient short link of www.nfpa.org/document#, (Example: NFPA 921 would be www.nfpa.org/921) Click in the gray Sign In box on the upper left side of the page. Once signed in, you will see a red "Welcome" message in the top right corner.

To begin your Public Input, select the link The next edition of this standard is now open for Public Input (formally "proposals") located on the Document Information tab, the Next Edition tab, or the right-hand Navigation bar. Alternatively, the Next Edition tab includes a link to Submit Public Input online

At this point, the NFPA Standards Development Site will open showing details for the document you have selected. This "Document Home" page site includes an explanatory introduction, information on the current document phase and closing date, a left-hand navigation panel that includes useful links, a document Table of Contents, and icons at the top you can click for Help when using the site. The Help icons and navigation panel will be visible except when you are actually in the process of creating a Public Input.

Once the First Draft Report becomes available there is a Public comment period during which anyone may submit a Public Comment on the First Draft. Any objections or further related changes to the content of the First Draft must be submitted at the Comment stage.

To submit a Public Comment you may access the e-Submission System utilizing the same steps as previous explained for the submission of Public Input.

For further information on submitting public input and public comments, go to: http://www.nfpa.org/publicinput

Other Resources available on the Doc Info Pages

Document information tab: Research current and previous edition information on a Standard

Next edition tab: Follow the committee's progress in the processing of a Standard in its next revision cycle.

Technical committee tab: View current committee member rosters or apply to a committee

Technical questions tab: For members and Public Sector Officials/AHJs to submit questions about codes and standards to NFPA staff. Our Technical Questions Service provides a convenient way to receive timely and consistent technical assistance when you need to know more about NFPA codes and standards relevant to your work. Responses are provided by NFPA staff on an informal basis.

Products/training tab: List of NFPA's publications and training available for purchase.

Community tab: Information and discussions about a Standard

Copyright 2015 National Fire Protection Association (NFPA). Licensed, by agreement, for individual use and download on June 24, 2015 to LEADER AND READER for designated user PATTARAPORN SRITRAKOOL. No other reproduction or transmission in any form permitted without written permission of NFPA. For inquires or to report unauthorized use, contact licensing@nfpa.org.

Information on the NFPA Standards Development Process

I. Applicable Regulations. The primary rules governing the processing of NFPA standards (codes, standards, recommended practices, and guides) are the NFPA *Regulations Governing the Development of NFPA Standards (Regs)*. Other applicable rules include NFPA *Bylaws*, NFPA *Technical Meeting Convention Rules*, NFPA *Guide for the Conduct of Participants in the NFPA Standards Development Process*, and the NFPA *Regulations Governing Petitions to the Board of Directors from Decisions of the Standards Council*. Most of these rules and regulations are contained in the *NFPA Standards Directory*. For copies of the *Directory*, contact Codes and Standards Administration at NFPA Headquarters; all these documents are also available on the NFPA website at "www.nfpa.org."

The following is general information on the NFPA process. All participants, however, should refer to the actual rules and regulations for a full understanding of this process and for the criteria that govern participation.

II. Technical Committee Report. The Technical Committee Report is defined as "the Report of the responsible Committee(s), in accordance with the Regulations, in preparation of a new or revised NFPA Standard." The Technical Committee Report is in two parts and consists of the First Draft Report and the Second Draft Report. (See *Regs* at 1.4)

III. Step 1: First Draft Report. The First Draft Report is defined as "Part one of the Technical Committee Report, which documents the Input Stage." The First Draft Report consists of the First Draft, Public Input, Committee Input, Committee and Correlating Committee Statements, Correlating Input, Correlating Notes, and Ballot Statements. (See *Regs* at 4.2.5.2 and Section 4.3) Any objection to an action in the First Draft Report must be raised through the filing of an appropriate Comment for consideration in the Second Draft Report or the objection will be considered resolved. [See *Regs* at 4.3.1(b)]

IV. Step 2: Second Draft Report. The Second Draft Report is defined as "Part two of the Technical Committee Report, which documents the Comment Stage." The Second Draft Report consists of the Second Draft, Public Comments with corresponding Committee Actions and Committee Statements, Correlating Notes and their respective Committee Statements, Committee Comments, Correlating Revisions, and Ballot Statements. (See *Regs* at Section 4.2.5.2 and 4.4) The First Draft Report and the Second Draft Report together constitute the Technical Committee Report. Any outstanding objection following the Second Draft Report must be raised through an appropriate Amending Motion at the Association Technical Meeting or the objection will be considered resolved. [See *Regs* at 4.4.1(b)]

V. Step 3a: Action at Association Technical Meeting. Following the publication of the Second Draft Report, there is a period during which those wishing to make proper Amending Motions on the Technical Committee Reports must signal their intention by submitting a Notice of Intent to Make a Motion. (See *Regs* at 4.5.2) Standards that receive notice of proper Amending Motions (Certified Amending Motions) will be presented for action at the annual June Association Technical Meeting. At the meeting, the NFPA membership can consider and act on these Certified Amending Motions as well as Follow-up Amending Motions, that is, motions that become necessary as a result of a previous successful Amending Motion. (See 4.5.3.2 through 4.5.3.6 and Table1, Columns 1-3 of *Regs* for a summary of the available Amending Motions and who may make them.) Any outstanding objection following action at an Association Technical Meeting (and any further Technical Committee consideration following successful Amending Motions, see *Regs* at 4.5.3.7 through 4.6.5.3) must be raised through an appeal to the Standards Council or it will be considered to be resolved.

VI. Step 3b: Documents Forwarded Directly to the Council. Where no Notice of Intent to Make a Motion (NITMAM) is received and certified in accordance with the Technical Meeting Convention Rules, the standard is forwarded directly to the Standards Council for action on issuance. Objections are deemed to be resolved for these documents. (See *Regs* at 4.5.2.5)

VII. Step 4a: Council Appeals. Anyone can appeal to the Standards Council concerning procedural or substantive matters related to the development, content, or issuance of any document of the Association or on matters within the purview of the authority of the Council, as established by the *Bylaws* and as determined by the Board of Directors. Such appeals must be in written form and filed with the Secretary of the Standards Council (See *Regs* at 1.6). Time constraints for filing an appeal must be in accordance with 1.6.2 of the *Regs*. Objections are deemed to be resolved if not pursued at this level.

VIII. Step 4b: Document Issuance. The Standards Council is the issuer of all documents (see Article 8 of *Bylaws*). The Council acts on the issuance of a document presented for action at an Association Technical Meeting within 75 days from the date of the recommendation from the Association Technical Meeting, unless this period is extended by the Council (See *Regs at* 4.7.2). For documents forwarded directly to the Standards Council, the Council acts on the issuance of the document at its next scheduled meeting, or at such other meeting as the Council may determine (See *Regs* at 4.5.2.5 and 4.7.4).

IX. Petitions to the Board of Directors. The Standards Council has been delegated the responsibility for the administration of the codes and standards development process and the issuance of documents. However, where extraordinary circumstances requiring the intervention of the Board of Directors exist, the Board of Directors may take any action necessary to fulfill its obligations to preserve the integrity of the codes and standards development process and to protect the interests of the Association. The rules for petitioning the Board of Directors can be found in the *Regulations Governing Petitions to the Board of Directors from Decisions of the Standards Council* and in 1.7 of the *Regs*.

X. For More Information. The program for the Association Technical Meeting (as well as the NFPA website as information becomes available) should be consulted for the date on which each report scheduled for consideration at the meeting will be presented. For copies of the First Draft Report and Second Draft Report as well as more information on NFPA rules and for up-to-date information on schedules and deadlines for processing NFPA documents, check the NFPA website (www.nfpa.org/aboutthecodes) or contact NFPA Codes & Standards Administration at (617) 984-7246.

Copyright 2015 National Fire Protection Association (NFPA). Licensed, by agreement, for individual use and download on June 24, 2015 to LEADER AND READER for designated user PATTARAPORN SRITRAKOOL. No other reproduction or transmission in any form permitted without written permission of NFPA. For inquires or to report unauthorized use, contact licensing@nfpa.org.

Stay Up-To-Date. Join NFPA® Today!

☑ **YES** Please enroll me as a member of NFPA for the term checked below. Activate all benefits, and ship my *Member Kit* including the *Benefits Guide* and other resources to help me make the most of my NFPA membership.

Please allow three to four weeks for the kit to arrive.

Billing Information:

Name _____ Title _____

Organization _____

Address _____

City _____ State _____ Zip/Postal Code _____

Country _____

Phone _____ E-mail _____

Priority Code: 8J-MIS-1Z

Please Answer The Following Questions:

Job Title *(check one)*

- ❑ Architect, Engineer, Consultant, Contractor (C17)
- ❑ Facilities Safety Officer (F14)
- ❑ Fire Chief, Other Fire Service (A11)
- ❑ Loss Control, Risk Manager (L11)
- ❑ Inspector, Building Official, Fire Marshal (F03)
- ❑ Owner, President, Manager, Administrator (C10)
- ❑ Other (please specify): (G11)_____

Type of Organization *(check one)*

- ❑ Architecture, Engineering, Contracting (A14)
- ❑ Commercial Firm (Office, Retail, Lodging, Restaurant) (G13)
- ❑ Electrical Services, Installation (J11)
- ❑ Fire Service, Public and Private (AA1)
- ❑ Government (C12)
- ❑ Industrial Firm (Factory, Warehouse) (C11)
- ❑ Institutional (Health Care, Education, Detention, Museums) (B11)
- ❑ Insurance, Risk Management (B12)
- ❑ Utilities (G12)
- ❑ Other (please specify): (G11)_____

4 Easy Ways to Join

Fax: 1-800-593-6372, Outside the U.S. +1-508-895-8301
Mail: NFPA Membership Services Center,
11 Tracy Drive, Avon, MA 02322-9908
Online: nfpa.org
Call: 1-800-344-3555
Outside the U.S. call +1-617-770-3000

12/14-D

Terms and Payment:

- ❑ 1 year ($165)
- ❑ 2 years ($300) SAVE $30
- ❑ 3 years ($430) SAVE $65

Annual membership dues include a $45 subscription to *NFPA Journal*®. Regular membership in NFPA is individual and non-transferable. NFPA Journal is a registered trademark of the National Fire Protection Association, Quincy, MA 02169. Voting privileges begin after 180 days of individual membership. Prices subject to change.

Payment Method:

Check One:

- ❑ Payment Enclosed *(Make check payable to NFPA.)*
- ❑ Purchase Order *(Please attach this form to your P.O.)*
- ❑ Bill Me Later *(Not available on International memberships.)*

Charge My: ❑ VISA ❑ MasterCard ❑ AmEx ❑ Discover

Card #_____

Expiration Date _____

Name on Card _____

Signature _____

International members: Please note prepayment is required on all International orders. Be sure to enclose a check or select your preferred credit card option.

100% Money-Back Guarantee

If anytime during your first year you decide membership is not for you, let us know and you'll receive a 100% refund of your dues.

Copyright 2015 National Fire Protection Association (NFPA). Licensed, by agreement, for individual use and download on June 24, 2015 to LEADER AND READER for designated user PATTARAPORN SRITRAKOOL. No other reproduction or transmission in any form permitted without written permission of NFPA. For inquires or to report unauthorized use, contact licensing@nfpa.org.

"Member-Only" Benefits
Keeps You Up-To-Date!

FREE! Technical Support — Technical Support by Phone/Email. Get fast, reliable answers to all code-related questions—from electrical safety for employee workplaces to carbon dioxide extinguishing systems—from NFPA's team of fire protection specialists.

NFPA Journal® — THE journal of record for fire protection, this bi-monthly publication will keep you abreast of the latest fire prevention and safety practices, as well as new technologies and strategies for protecting life and property from fire.

NFPA Update — This easy-to-read monthly e-newsletter will keep you up-to-date on important association programs such as the annual meeting; bring you times of interest from NFPA's regional offices; and alert you to nationwide events and opportunities you won't want to miss.

NFPA News — From new standards for dry cleaning plants to warning equipment for household carbon monoxide, this monthly online update keeps you abreast of additions of changes that could impact how you do you work.

NFPA Standards Directory — The NFPA Standards Directory is your complete guide to NFPA's code-making process. Simply access your online NFPA member profile for document revision guidelines, the revision cycle schedule, and forms for submitting Proposals and Comments. Your online NFPA member profile and access to the NFPA Standards Directory is automatically generated once you join NFPA.

FREE! Section Membership — Share YOUR expertise with others in any of 16 industry-specific sections covering your own field of interest.

Member Kit — Includes Membership Certificate, Pin, Decals, ID Card, and Camera-ready Logo Art. Display the NFPA member logo proudly on your business correspondence, literature, website, and vehicles.

10% Discounts — Save hundreds of dollars each year on the many products and services listed in the NFPA Catalog, including codes and standards publications, handbooks, training videos, and other education materials to increase your knowledge and skills.

Voting Rights — Your chance to help shape the future direction of fire prevention codes and standards. Voting rights go into effect 180 days from the start of individual membership.

Conference Invitation— Invitation to the NFPA Conference and Expo. Attend this important meeting at discounted rates as a member of NFPA.

Join NFPA today!
www.nfpa.org

NFPA® and *NFPA Journal*® are registered trademarks of the National Fire Protection Association, Quincy, MA 02169-7471