Copyright 2014 National Fire Protection Association (NFPA). Licensed, by agreement, for individual use and download on October 4, 2014 to LEADER and READER for designated user PATTARAPORN SRITRAKOOL. No other reproduction or transmission in any form permitted without written permission of NFPA. For inquires or to report unauthorized use, contact licensing@nfpa.org.

NFPA® 85

Boiler and Combustion Systems Hazards Code

2011 Edition



NFPA, 1 Batterymarch Park, Quincy, MA 02169-7471
An International Codes and Standards Organization

Copyright 2014 National Fire Protection Association (NFPA). Licensed, by agreement, for individual use and download on October 4, 2014 to LEADER and READER for designated user PATTARAPORN SRITRAKOOL. No other reproduction or transmission in any form permitted without written permission of NFPA. For inquires or to report unauthorized use, contact licensing@nfpa.org.

IMPORTANT NOTICES AND DISCLAIMERS CONCERNING NFPA® DOCUMENTS
NOTICE AND DISCLAIMER OF LIABILITY CONCERNING THE USE OF NFPA DOCUMENTS

NFPA® codes, standards, recommended practices, and guides ("NFPA Documents"), of which the document contained herein is one, are developed through a consensus standards development process approved by the American National Standards Institute. This process brings together volunteers representing varied viewpoints and interests to achieve consensus on fire and other safety issues. While the NFPA administers the process and establishes rules to promote fairness in the development of consensus, it does not independently test, evaluate, or verify the accuracy of any information or the soundness of any judgments contained in NFPA Documents.

The NFPA disclaims liability for any personal injury, property or other damages of any nature whatsoever, whether special, indirect, consequential or compensatory, directly or indirectly resulting from the publication, use of, or reliance on NFPA Documents. The NFPA also makes no guaranty or warranty as to the accuracy or completeness of any information published herein.

In issuing and making NFPA Documents available, the NFPA is not undertaking to render professional or other services for or on behalf of any person or entity. Nor is the NFPA undertaking to perform any duty owed by any person or entity to someone else. Anyone using this document should rely on his or her own independent judgment or, as appropriate, seek the advice of a competent professional in determining the exercise of reasonable care in any given circumstances.

The NFPA has no power, nor does it undertake, to police or enforce compliance with the contents of NFPA Documents. Nor does the NFPA list, certify, test, or inspect products, designs, or installations for compliance with this document. Any certification or other statement of compliance with the requirements of this document shall not be attributable to the NFPA and is solely the responsibility of the certifier or maker of the statement.

ISBN: 978-161665704-8 (Print)
ISBN: 978-145590011-4 (PDF) 12/09

Copyright 2014 National Fire Protection Association (NFPA). Licensed, by agreement, for individual use and download on October 4, 2014 to LEADER and READER for designated user PATTARAPORN SRITRAKOOL. No other reproduction or transmission in any form permitted without written permission of NFPA. For inquires or to report unauthorized use, contact licensing@nfpa.org.

IMPORTANT NOTICES AND DISCLAIMERS CONCERNING NFPA DOCUMENTS

ADDITIONAL NOTICES AND DISCLAIMERS

Updating of NFPA Documents

Users of NFPA codes, standards, recommended practices, and guides ("NFPA Documents") should be aware that these documents may be superseded at any time by the issuance of new editions or may be amended from time to time through the issuance of Tentative Interim Amendments. An official NFPA Document at any point in time consists of the current edition of the document together with any Tentative Interim Amendments and any Errata then in effect. In order to determine whether a given document is the current edition and whether it has been amended through the issuance of Tentative Interim Amendments or corrected through the issuance of Errata, consult appropriate NFPA publications such as the National Fire Codes® Subscription Service, visit the NFPA website at www.nfpa.org, or contact the NFPA at the address listed below.

Interpretations of NFPA Documents

A statement, written or oral, that is not processed in accordance with Section 6 of the Regulations Governing Committee Projects shall not be considered the official position of NFPA or any of its Committees and shall not be considered to be, nor be relied upon as, a Formal Interpretation.

Patents

The NFPA does not take any position with respect to the validity of any patent rights referenced in, related to, or asserted in connection with an NFPA Document. The users of NFPA Documents bear the sole responsibility for determining the validity of any such patent rights, as well as the risk of infringement of such rights, and the NFPA disclaims liability for the infringement of any patent resulting from the use of or reliance on NFPA Documents.

NFPA adheres to the policy of the American National Standards Institute (ANSI) regarding the inclusion of patents in American National Standards ("the ANSI Patent Policy"), and hereby gives the following notice pursuant to that policy:

NOTICE: The user's attention is called to the possibility that compliance with an NFPA Document may require use of an invention covered by patent rights. NFPA takes no position as to the validity of any such patent rights or as to whether such patent rights constitute or include essential patent claims under the ANSI Patent Policy. If, in connection with the ANSI Patent Policy, a patent holder has filed a statement of willingness to grant licenses under these rights on reasonable and nondiscriminatory terms and conditions to applicants desiring to obtain such a license, copies of such filed statements can be obtained, on request, from NFPA. For further information, contact the NFPA at the address listed below.

Law and Regulations

Users of NFPA Documents should consult applicable federal, state, and local laws and regulations. NFPA does not, by the publication of its codes, standards, recommended practices, and guides, intend to urge action that is not in compliance with applicable laws, and these documents may not be construed as doing so.

Copyrights

NFPA Documents are copyrighted by the NFPA. They are made available for a wide variety of both public and private uses. These include both use, by reference, in laws and regulations, and use in private self-regulation, standardization, and the promotion of safe practices and methods. By making these documents available for use and adoption by public authorities and private users, the NFPA does not waive any rights in copyright to these documents.

Use of NFPA Documents for regulatory purposes should be accomplished through adoption by reference. The term "adoption by reference" means the citing of title, edition, and publishing information only. Any deletions, additions, and changes desired by the adopting authority should be noted separately in the adopting instrument. In order to assist NFPA in following the uses made of its documents, adopting authorities are requested to notify the NFPA (Attention: Secretary, Standards Council) in writing of such use. For technical assistance and questions concerning adoption of NFPA Documents, contact NFPA at the address below.

For Further Information

All questions or other communications relating to NFPA Documents and all requests for information on NFPA procedures governing its codes and standards development process, including information on the procedures for requesting Formal Interpretations, for proposing Tentative Interim Amendments, and for proposing revisions to NFPA documents during regular revision cycles, should be sent to NFPA headquarters, addressed to the attention of the Secretary, Standards Council, NFPA, 1 Batterymarch Park, P.O. Box 9101, Quincy, MA 02169-7471; email: stds_admin@nfpa.org

For more information about NFPA, visit the NFPA website at www.nfpa.org.

Copyright 2014 National Fire Protection Association (NFPA). Licensed, by agreement, for individual use and download on October 4, 2014 to LEADER and READER for designated user PATTARAPORN SRITRAKOOL. No other reproduction or transmission in any form permitted without written permission of NFPA. For inquires or to report unauthorized use, contact licensing@nfpa.org.

Copyright © 2010 National Fire Protection Association®. All Rights Reserved.

NFPA® 85

Boiler and Combustion Systems Hazards Code

2011 Edition

This edition of NFPA 85, *Boiler and Combustion Systems Hazards Code*, was prepared by the Technical Committees on Fluidized Bed Boilers, Fundamentals of Combustion Systems Hazards, Heat Recovery Steam Generators, Multiple Burner Boilers, Pulverized Fuel Systems, Single Burner Boilers, and Stoker Operations and released by the Technical Correlating Committee on Boiler Combustion System Hazards. It was issued by the Standards Council on December 14, 2010, with an effective date of January 3, 2011, and supersedes all previous editions.

This edition of NFPA 85 was approved as an American National Standard on January 3, 2011.

Origin and Development of NFPA 85

NFPA 85 has a long history of documents that were combined to form the present-day NFPA 85. (See Annex M, which is a flowchart depicting the complex development of NFPA 85.) The first of these documents, in 1924, was NBFU 60, "Regulations of the National Board of Fire Underwriters for the Installation of Pulverized Fuel Systems as Recommended by the National Fire Protection Association," which changed from an NBFU/NFPA document to an NFPA code in 1946.

The 2001 edition of NFPA 85 was a compilation of the following six standards:

NFPA 8501, *Standard for Single Burner Boiler Operation*

NFPA 8502, *Standard for the Prevention of Furnace Explosions/Implosions in Multiple Burner Boilers*

NFPA 8503, *Standard for Pulverized Fuel Systems*

NFPA 8504, *Standard on Atmospheric Fluidized-Bed Boiler Operation*

NFPA 8505, *Standard for Stoker Operation*

NFPA 8506, *Standard on Heat Recovery Steam Generator Systems*

In the 2001 edition, significant new material was added for multiple burner boilers, including requirements for reburn systems. For heat recovery steam generators, the minimum purge flow requirements prior to starting the combustion turbine were reduced.

The 2004 edition was reorganized to provide administrative requirements in Chapters 1, 2, and 3 and common requirements in Chapter 4, Fundamentals of Boiler Combustion Systems. Subsequent chapters covered the specific requirements for each of the boiler and combustion systems covered by the document. The 2004 edition also provided new requirements that addressed selective catalytic reduction (SCR) systems for multiple burner boilers.

In the 2007 edition, Annex M was added to assist users to better understand the complex development of what is now known as NFPA 85. The 2007 edition also included the following major changes, by chapter:

Chapter 4:

(1) The specific requirements for furnace structural design were removed from Chapter 4 and relocated as appropriate to the individual chapters.
(2) Requirements for flue gas path auxiliary systems were added, along with supporting annex material.
(3) The section previously titled "Programmable Logic Controllers" was merged into the design requirements for the logic system.
(4) New flame proving requirements were added.
(5) Commissioning and installation requirements were consolidated into a single section.

Chapter 5: The use of valve proving systems in fuel gas trains was added.

NFPA and National Fire Protection Association are registered trademarks of the National Fire Protection Association, Quincy, Massachusetts 02169.

Copyright 2014 National Fire Protection Association (NFPA). Licensed, by agreement, for individual use and download on October 4, 2014 to LEADER and READER for designated user PATTARAPORN SRITRAKOOL. No other reproduction or transmission in any form permitted without written permission of NFPA. For inquires or to report unauthorized use, contact licensing@nfpa.org.

Chapter 6:

(1) The scope of Chapter 6 was clarified as being applicable from the forced draft fan inlets to the stack inlet.
(2) Requirements for flue gas path auxiliary systems specific to multiple burner boilers were added.
(3) Purge requirements were rewritten and consolidated.
(4) Furnace structural design requirements for multiple burner boilers were added and now include the impact of booster fans. Implosion protection was clarified as not being required on units that have no fan in the flue gas stream downstream of the boiler. In conjunction with these changes, a definition of *booster fan* was added to Chapter 3.
(5) Requirements for fuel gas and fuel oil safety shutoff valves were added.
(6) Sections 6.6, 6.7, and 6.8 were modified for consistency in numbering and content.

Chapter 7:

(1) Requirements for lance and burner safety shutoff valves were added.
(2) Requirements for flue gas path auxiliary systems were added.

Chapter 8:

(1) The scope of Chapter 8 was expanded from heat recovery steam generators to include other combustion turbine exhaust systems that present similar fire and explosion hazards, including those with no heat recovery. The definition of *combustion turbine exhaust systems* was added to Chapter 3, and other changes were made throughout the code as required for consistency.
(2) Additional combustion turbine interlocks were added to ensure fuel gas in-leakage does not occur during the combustion turbine purge and that excessive fuel is not introduced during combustion turbine light-off.
(3) Specific requirements for heat recovery steam generator (HRSG) implosion protection were added.

Chapter 9: The fuels to which Chapter 9 applies were revised.

Chapter 10: Transient design pressure requirements specific to stokers were added.

The 2011 edition incorporates a renumbering and reorganization of Chapter 4 to make it easier to use and cite. In addition, Chapter 4 has expanded requirements and annex guidance for burner management systems to describe the types of signals and transmitters used to initiate safety alarms and interlocks and how those signals should be monitored for reliability. Chapter 4 also contains modified requirements for continuous trend display for single burner boilers to require only those parameters critical to operation.

A definition of *combustion turbine purge credit* was added to Chapter 3, and requirements for the credit to Chapter 8. The combustion turbine purge credit will enable designers and operators to establish and maintain a "purged" condition for HRSGs for an extended period of time between restarts.

Guidance was also added to Annex A regarding flue gas analyzers in Chapters 5, 6, and 7 concerning the potential for certain types to provide a source of ignition during startup. In Chapter 6, which addresses multiple burner boilers, the "all fan trip" purge requirements were revised for clarity and to improve the safety of that procedure.

Copyright 2014 National Fire Protection Association (NFPA). Licensed, by agreement, for individual use and download on October 4, 2014 to LEADER and READER for designated user PATTARAPORN SRITRAKOOL. No other reproduction or transmission in any form permitted without written permission of NFPA. For inquires or to report unauthorized use, contact licensing@nfpa.org.

Technical Correlating Committee on Boiler Combustion System Hazards

Michael C. Polagye, *Chair*
FM Global, MA [I]

James R. Bostick, ABB Automation, OH [M]
David Paul Cannon, Hurst Technologies, TX [SE]
William E. Cunningham, Jr., Riley Power Inc., MA [M]
Dale E. Dressel, Solutia Incorporated, MO [U]
David S. Eason, Detroit Edison Company, MI [U]
Gordon G. Gaetke, The Dow Chemical Company, TX [U]
David W. King, American Electric Power Service Corporation, OH [U]
Masaaki Kinoshita, Mitsubishi Heavy Industries Ltd., Japan [M]
Gail J. Lance, Babcock & Wilcox Company, OH [M]
Robert Malanga, Fire and Risk Engineering, NJ [SE]
Dennis P. Mason, AEGIS Insurance Services, MI [I]
Jerry J. Moskal, ALSTOM Power Incorporated, CT [M]
Jimmie J. Schexnayder, Entergy Corporation, LA [U]
Celso G. Schmidt, UTC/Forney Corporation, TX [M]
Peter J. Willse, XL Global Asset Protection Services, CT [I]
Henry K. Wong, Washington Group International, NJ [SE]
Allan J. Zadiraka, Akron, OH [SE]

Alternates

Barry J. Basile, Babcock Power, Inc., MA [M]
(Alt. to W. E. Cunningham, Jr.)
Ronald J. Fleming, ABB Incorporated, OH [M]
(Alt. to J. R. Bostick)
John P. O'Rourke, ALSTOM Power Inc., CT [M]
(Alt. to J. J. Moskal)

Nonvoting

John C. deRuyter, The DuPont Company, Inc., DE [U]
Rep. TC on Stoker Operations
John J. Eibl, The DuPont Company, Inc., TN [U]
Rep. TC on Single Burner Boilers
Dale P. Evely, Southern Company Services, Inc., AL [U]
Rep. TC on Fundamentals of Combustion Systems Hazards
Brian W. Moore, Hartford Steam Boiler Inspection & Insurance Company, CT [I]
Rep. TC on Fluidized Bed Boilers
William A. (Andy) Smith, Global Risk Consultants Corporation, GA [SE]
Rep. TC on Pulverized Fuel Systems
John Van Name, URS — Washington Division, NY [SE]
Rep. TC on Heat Recovery Steam Generators
Harold R. Yates, HRY, Inc., MI [SE]
Rep. TC on Multiple Burner Boilers

Denise Beach, NFPA Staff Liaison

This list represents the membership at the time the Committee was balloted on the final text of this edition. Since that time, changes in the membership may have occurred. A key to classifications is found at the back of the document.

NOTE: Membership on a committee shall not in and of itself constitute an endorsement of the Association or any document developed by the committee on which the member serves.

Committee Scope: This Committee shall have primary responsibility for documents on the reduction of combustion system hazards in single- and multiple-burner boilers with a heat input rate of 12,500,000 Btu/hr and above. This includes all fuels. This Committee also is responsible for documents on the reduction of hazards in pulverized fuel systems, fluidized bed boilers, heat recovery steam generators and other combustion turbine exhaust systems, and stoker-fired boilers, at any heat input rate.

Technical Committee on Fluidized Bed Boilers

Brian W. Moore, *Chair*
Hartford Steam Boiler Inspection & Insurance Company, CT [I]

P. K. Chelian, Foster Wheeler Power Group, Inc., NJ [M]
Joseph N. Darguzas, EnviroPower, LLC, IL [IM]
Carl A. Dunn, WorleyParsons, PA [SE]
Shelton Ehrlich, Palo Alto, CA [SE]
David Habenicht, Global Risk Consultants Corporation, IL [SE]
Robert M. Herdman, ABB Automation Inc., OH [M]
Vic L. Jones, Merrick Industries Incorporated, FL [M]
David L. Kraft, Babcock & Wilcox Company, OH [M]
Donald L. Lueckenotte, Burns & McDonnell Engineering Company, MO [SE]
Paul H. Miller, Southern Company Services, AL [U]
Gary E. Norman, ALSTOM Power Inc., CT [M]
Everett W. Truman, Starr Technical Risks Agency, Inc., WV [U]
Rep. Edison Electric Institute

Copyright 2014 National Fire Protection Association (NFPA). Licensed, by agreement, for individual use and download on October 4, 2014 to LEADER and READER for designated user PATTARAPORN SRITRAKOOL. No other reproduction or transmission in any form permitted without written permission of NFPA. For inquires or to report unauthorized use, contact licensing@nfpa.org.

Alternates

Kevin M. Estes, Foster Wheeler Power Group, Inc., FL [M]
(Alt. to P. K. Chelian)

John P. O'Rourke, ALSTOM Power Inc., CT [M]
(Alt. to G. E. Norman)

Denise Beach, NFPA Staff Liaison

This list represents the membership at the time the Committee was balloted on the final text of this edition. Since that time, changes in the membership may have occurred. A key to classifications is found at the back of the document.

NOTE: Membership on a committee shall not in and of itself constitute an endorsement of the Association or any document developed by the committee on which the member serves.

Committee Scope: This Committee shall have primary responsibility for documents on the operation and reduction of combustion system hazards and the prevention of boiler furnace explosions of fluidized bed boilers. This includes all fuels at any heat input rate.

Technical Committee on Fundamentals of Combustion Systems Hazards

Dale P. Evely, *Chair*
Southern Company Services, Inc., AL [U]

Barry J. Basile, Babcock Power, Inc., MA [M]
Carlton A. Bosfield, Grand Bahama Power Company, FL [U]
David A. Cowdrick, Tampa Electric Company, FL [U]
John D. Eley, GN Electronics Inc., IL [M]
Richard A. Gallagher, Zurich Services Corporation, DE [I]
John S. Gilbert, Chubb Group of Insurance Companies, NY [I]
Ted Jablkowski, Fives North American Combustion, Inc., CT [M]
Richard Kimball, HF Controls Corporation, TX [M]
Randy J. Kleen, General Electric Company, TX [M]
James E. Lemanski, XL Insurance, IL [I]
Richard T. Long, Jr., Exponent, Inc., MD [SE]
Dennis P. Mason, AEGIS Insurance Services, MI [I]
John R. Puskar, CEC Combustion Safety, Inc., OH [SE]
Glenn A. Raney, Invensys-Premier Consulting Services, TX [M]
Mark A. Ratcliffe, Jacobs Engineering Group, TX [SE]
Celso G. Schmidt, UTC/Forney Corporation, TX [M]
Bill L. Smith, Jr., Exothermic Engineering Company, LLC, MO [SE]
William A. (Andy) Smith, Global Risk Consultants Corporation, GA [SE]
Franklin R. Switzer, Jr., S-afe, Inc., IN [SE]
Michael A. Walz, Burns & McDonnell Engineering Company, MO [SE]
Harold R. Yates, HRY, Inc., MI [SE]
Todd F. Young, Progress Energy, FL [U]

Alternates

Bryan R. Baesel, CEC Combustion Safety, Inc., OH [SE]
(Alt. to J. R. Puskar)
H. Mark Ezekiel, Southern Company Generation, AL [U]
(Alt. to D. P. Evely)
Kenneth Hurlburt, Babcock Power, Inc., MA [M]
(Alt. to B. J. Basile)
Gail J. Lance, Babcock & Wilcox Company, OH [M]
(Voting Alt. to B&W Rep.)
Daniel R. May, Burns & McDonnell Engineering Company, MO [SE]
(Alt. to M. A. Walz)
William M. Rucki, Fives North American Combustion, Inc., OH [M]
(Alt. to T. Jablkowski)

Nonvoting

Carlos Lasarte, Combustion, Energia & Ambiente, C.A., Venezuela [U]

Denise Beach, NFPA Staff Liaison

This list represents the membership at the time the Committee was balloted on the final text of this edition. Since that time, changes in the membership may have occurred. A key to classifications is found at the back of the document.

NOTE: Membership on a committee shall not in and of itself constitute an endorsement of the Association or any document developed by the committee on which the member serves.

Committee Scope: This Committee shall have primary responsibility for documents or portions of documents on fundamentals, maintenance, inspection, training, and safety for the reduction of combustion system hazards. Fundamentals shall specifically include definitions, furnace explosion/implosion prevention, manufacture, design and engineering, installation, coordination of design, construction and operation, basic operating objectives, equipment requirements, and commissioning.

Copyright 2014 National Fire Protection Association (NFPA). Licensed, by agreement, for individual use and download on October 4, 2014 to LEADER and READER for designated user PATTARAPORN SRITRAKOOL. No other reproduction or transmission in any form permitted without written permission of NFPA. For inquires or to report unauthorized use, contact licensing@nfpa.org.

Technical Committee on Heat Recovery Steam Generators

John Van Name, *Chair*
URS–Washington Division, NY [SE]

Harold Honath, *Secretary*
John Zink Company, LLC, CA [M]

Donald W. Bairley, ALSTOM Power Inc., CT [M]
Robert R. Balsbaugh, Burns & McDonnell Engineering Company, MO [SE]
Alfred J. Beaty, UTC/Forney Corporation, TX [M]
Dale P. Evely, Southern Company Services, Inc., AL [U]
Gordon G. Gaetke, The Dow Chemical Company, TX [U]
David J. Hinshaw, Dynegy, Inc., NY [U]
George Y. Keller, Burns & Roe Enterprises, Inc., NJ [SE]
Randy J. Kleen, General Electric Company, TX [M]
Steven A. Lefton, Intertek-APTECH Engineering, CA [SE]
Steven A. Meierotto, Nooter Eriksen, MO [M]
Brian W. Moore, Hartford Steam Boiler Inspection & Insurance Company, CT [I]
Michael C. Polagye, FM Global, MA [I]
Jimmie J. Schexnayder, Entergy Corporation, LA [U]
Philip F. Souers, Siemens Power Generation Inc., FL [M]
John A. Stevens, Emerson Process Management, TX [M]
Joseph M. Vavrek, Sargent & Lundy, LLC, IL [SE]
James P. Walawender, Black & Veatch Corporation, KS [SE]
Ilya Yarinovsky, Bechtel Corporation, MD [SE]
Todd F. Young, Progress Energy, FL [U]

Alternates

Richard A. Brown, John Zink Company, LLC, OK [M]
(Alt. to H. Honath)
Sanda Brumaru, Burns and Roe Enterprises, NJ [SE]
(Alt. to G. Y. Keller)
Miguel Cancelado, Siemens Energy, FL [M]
(Alt. to P. F. Souers)
Steven V. Graf, Emerson Process Management, PA [M]
(Alt. to J. A. Stevens)
Joshua S. Kelly, UTC/Forney Corporation, TX [M]
(Alt. to A. J. Beaty)
Christopher J. Lech, ALSTOM Power Inc., CT [M]
(Alt. to D. W. Bairley)
Michael R. Mulherin, The Dow Chemical Company, TX [U]
(Alt. to G. G. Gaetke)
Ronald Rispoli, Entergy Corporation, AR [U]
(Alt. to J. J. Schexnayder)
Earl D. Snider, Southern Company Services, Inc., AL [U]
(Alt. to D. P. Evely)

Denise Beach, NFPA Staff Liaison

This list represents the membership at the time the Committee was balloted on the final text of this edition. Since that time, changes in the membership may have occurred. A key to classifications is found at the back of the document.

NOTE: Membership on a committee shall not in and of itself constitute an endorsement of the Association or any document developed by the committee on which the member serves.

Committee Scope: This Committee shall have primary responsibility for documents covering the operation of heat recovery steam generators and other combustion turbine exhaust systems, and the related reduction of combustion system hazards and prevention of explosions. This includes all fuels at any heat input rate.

Technical Committee on Multiple Burner Boilers

Harold R. Yates, *Chair*
HRY, Inc., MI [SE]

Bernard Hrul, *Secretary*
Allen Bradley Company, GA [U]

Frank J. Bennett, Mirant Mid-Atlantic, MD [U]
Dale E. Dressel, Solutia Incorporated, MO [U]
John J. Eibl, The DuPont Company, Inc., TN [U]
Dale P. Evely, Southern Company Services, Inc., AL [U]
Kenneth Joe Frazier, Salt River Project , AZ [U]
Gordon G. Gaetke, The Dow Chemical Company, TX [U]
Kris A. Gamble, Black & Veatch Corporation, KS [SE]
Kenneth Hurlburt, Babcock Power, Inc., MA [M]
George Y. Keller, Burns & Roe Enterprises, Inc., NJ [SE]
Richard Kimball, HF Controls Corporation, TX [M]
David W. King, American Electric Power Service Corporation, OH [U]
Daniel J. Lee, ABB Incorporated, OH [M]
W. Scott Matz, Invensys Process Systems, TX [M]
Peter McKenna, Stone & Webster, Inc., MA [SE]
Lalit M. Mehta, Iris Systems Inc., Canada [M]
Terry A. Nelson, Yokogawa Corporation of America, TX [M]
John P. O'Rourke, ALSTOM Power Inc., CT [M]
Michael C. Polagye, FM Global, MA [I]
Glenn A. Raney, Invensys-Premier Consulting Services, TX [SE]
Thomas D. Russell, Honeywell, Inc., TX [M]
Jimmie J. Schexnayder, Entergy Corporation, LA [U]
Celso G. Schmidt, UTC/Forney Corporation, TX [M]
Franklin R. Switzer, Jr., S-afe, Inc., IN [SE]
Joseph M. Vavrek, Sargent & Lundy, LLC, IL [SE]
Michael A. Walz, Burns & McDonnell Engineering Company, MO [SE]
Peter J. Willse, XL Global Asset Protection Services, CT [I]
Henry K. Wong, Washington Group International, NJ [SE]
Allan J. Zadiraka, Akron, OH [SE]

Copyright 2014 National Fire Protection Association (NFPA). Licensed, by agreement, for individual use and download on October 4, 2014 to LEADER and READER for designated user PATTARAPORN SRITRAKOOL. No other reproduction or transmission in any form permitted without written permission of NFPA. For inquires or to report unauthorized use, contact licensing@nfpa.org.

Alternates

John E. Bollinger, Babcock & Wilcox Company, OH [M]
(Voting Alt. to B&W Rep.)
John C. deRuyter, The DuPont Company, Inc., DE [U]
(Alt. to J. J. Eibl)
Ronald J. Fleming, ABB Incorporated, OH [M]
(Alt. to D. J. Lee)
Daniel R. May, Burns & McDonnell Engineering Company, MO [SE]
(Alt. to M. A. Walz)
Michael R. Mulherin, The Dow Chemical Company, TX [U]
(Alt. to G. G. Gaetke)
Gary E. Norman, ALSTOM Power Inc., CT [M]
(Alt. to J. P. O'Rourke)
Ronald Rispoli, Entergy Corporation, AR [U]
(Alt. to J. J. Schexnayder)
Steven T. Riviere, Southern Company Services, Inc., GA [U]
(Alt. to D. P. Evely)
Carlos Santos, Jr., Invensys Foxboro Systems, TX [M]
(Alt. to W. S. Matz)

Nonvoting

S. Dharmalingam, Bharat Heavy Electricals Ltd., India [M]

Denise Beach, NFPA Staff Liaison

This list represents the membership at the time the Committee was balloted on the final text of this edition. Since that time, changes in the membership may have occurred. A key to classifications is found at the back of the document.

NOTE: Membership on a committee shall not in and of itself constitute an endorsement of the Association or any document developed by the committee on which the member serves.

Committee Scope: This Committee shall have primary responsibility for documents covering the reduction of combustion system hazards and the prevention of boiler furnace explosions and implosions in multiple burner boilers with a heat input rate of 12,500,000 Btu/hr and above. This includes all fuels.

Technical Committee on Pulverized Fuel Systems

William A. (Andy) Smith, *Chair*
Global Risk Consultants Corporation, GA [SE]

David A. Cowdrick, Tampa Electric Company, FL [U]
John C. deRuyter, The DuPont Company, Inc., DE [U]
David S. Eason, Detroit Edison Company, MI [U]
Rory G. Eastman, ALSTOM Power Inc., CT [M]
Mark T. Fecke, Exponent, Inc., IL [SE]
Roderick J. Hossfeld, Jenike & Johanson, Inc., MA [SE]
William N. Martin, Babcock & Wilcox Company, OH [M]
Kiran R. Patel, Babcock Power, Inc., MA [M]
Jonathan R. Pranitis, Foster Wheeler Energy Corporation, NJ [M]
Cleveland B. Skinker, Bechtel Power Corporation, MD [SE]
Erdem A. Ural, Loss Prevention Science & Technologies, Inc., MA [SE]
Frederick H. Wehe, Luminant, Big Brown SES, TX [U]

Nonvoting

Vincent Grosskopf, Thorwesten Vent GmbH, Germany [M]

Denise Beach, NFPA Staff Liaison

This list represents the membership at the time the Committee was balloted on the final text of this edition. Since that time, changes in the membership may have occurred. A key to classifications is found at the back of the document.

NOTE: Membership on a committee shall not in and of itself constitute an endorsement of the Association or any document developed by the committee on which the member serves.

Committee Scope: This Committee shall have primary responsibility for documents on the operation and design requirements of pulverized fuel systems and reduction of hazards associated with those systems. This includes all carbonaceous solid fuels at any heat input rate.

Copyright 2014 National Fire Protection Association (NFPA). Licensed, by agreement, for individual use and download on October 4, 2014 to LEADER and READER for designated user PATTARAPORN SRITRAKOOL. No other reproduction or transmission in any form permitted without written permission of NFPA. For inquires or to report unauthorized use, contact licensing@nfpa.org.

Technical Committee on Single Burner Boilers

John J. Eibl, *Chair*
The DuPont Company, Inc., TN [U]

Carlton A. Bosfield, Grand Bahama Power Company, FL [U]
John T. Connor, Burns & McDonnell Engineering Company, MO [SE]
Dale E. Dressel, Solutia Incorporated, MO [U]
Joseph E. Fehr, Sega Inc., KS [SE]
G. F. Gilman, SIS-Tech, OH [SE]
Ted Jablkowski, Fives North American Combustion, Inc., CT [M]
Robert A. Koehler, Liberty Mutual Property, TX [I]
Rep. Property Casualty Insurers Association of America
W. Scott Matz, Invensys Process Systems, TX [M]
Peter S. Pinto, SCC, Inc., IL [M]
Gary J. Shrider, Babcock & Wilcox Company, OH [M]
Franklin R. Switzer, Jr., S-afe, Inc., IN [SE]
J. A. Wagner, UTC/Fireye, NJ [M]
Chris Wille, John Zink Company, LLC, CA [M]
Peter J. Willse, XL Global Asset Protection Services, CT [I]

Alternates

Michael Francis, John Zink Company, LLC, CA [M]
(Alt. to C. Wille)
Glenn A. Raney, Invensys-Premier Consulting Services, TX [M]
(Alt. to W. S. Matz)
William M. Rucki, Fives North American Combustion, Inc., OH [M]
(Alt. to T. Jablkowski)
Dennis Szabo, XL Global Asset Protection Services, GA [I]
(Alt. to P. J. Willse)

Denise Beach, NFPA Staff Liaison

This list represents the membership at the time the Committee was balloted on the final text of this edition. Since that time, changes in the membership may have occurred. A key to classifications is found at the back of the document.

NOTE: Membership on a committee shall not in and of itself constitute an endorsement of the Association or any document developed by the committee on which the member serves.

Committee Scope: This Committee shall have primary responsibility for documents on the reduction of combustion system hazards and the prevention of boiler furnace explosions in single burner boilers with a heat input rate of 12,500,000 Btu/hr and above. This includes all fuels.

Technical Committee on Stoker Operations

John C. deRuyter, *Chair*
The DuPont Company, Inc., DE [U]

J. Mike Cantrell, The McBurney Corporation, GA [IM]
Andrew K. Dant, Cogentrix Energy, Incorporated, NC [U]
Mark T. Fecke, Exponent, Inc., IL [SE]
John Hoh, National Board of Boiler & Pressure Vessel Inspectors, OH [E]
Robert S. Morrow, Detroit Stoker Company, MI [M]
Bill L. Smith, Jr., Exothermic Engineering Company, LLC, MO [SE]

Denise Beach, NFPA Staff Liaison

This list represents the membership at the time the Committee was balloted on the final text of this edition. Since that time, changes in the membership may have occurred. A key to classifications is found at the back of the document.

NOTE: Membership on a committee shall not in and of itself constitute an endorsement of the Association or any document developed by the committee on which the member serves.

Committee Scope: This Committee shall have primary responsibility for documents covering the operation of stokers and related fuel burning equipment. This includes all fuels at any heat input rate.

Copyright 2014 National Fire Protection Association (NFPA). Licensed, by agreement, for individual use and download on October 4, 2014 to LEADER and READER for designated user PATTARAPORN SRITRAKOOL. No other reproduction or transmission in any form permitted without written permission of NFPA. For inquires or to report unauthorized use, contact licensing@nfpa.org.

Contents

Chapter 1 Administration 85– 10
1.1 Scope. 85– 10
1.2 Purpose 85– 10
1.3 Application 85– 10
1.4 Retroactivity 85– 11
1.5 Equivalency 85– 11
1.6 Enforcement 85– 11

Chapter 2 Referenced Publications 85– 11
2.1 General 85– 11
2.2 NFPA Publications 85– 11
2.3 Other Publications 85– 11
2.4 References for Extracts in Mandatory Sections 85– 11

Chapter 3 Definitions 85– 11
3.1 General 85– 11
3.2 NFPA Official Definitions 85– 12
3.3 General Definitions 85– 12

Chapter 4 Fundamentals 85– 20
4.1 Manufacture, Design, and Engineering 85– 20
4.2 Installation and Commissioning 85– 20
4.3 Coordination of Design, Construction, and Operation 85– 21
4.4 Maintenance, Inspection, Training, and Safety. 85– 21
4.5 Basic Operating Requirements 85– 21
4.6 Structural Design 85– 22
4.7 Functional Requirements of Fuel-Burning System. 85– 22
4.8 Multiple Boilers 85– 23
4.9 Gaseous Vent System Requirements 85– 23
4.10 Fuel System Piping. 85– 24
4.11 Burner Management System Logic. 85– 24
4.12 Flame Monitoring and Tripping Systems 85– 25
4.13 Combustion Control System 85– 25
4.14 Power Supplies 85– 26
4.15 Operating Information 85– 26
4.16 Selective Catalytic Reduction 85– 26

Chapter 5 Single Burner Boilers 85– 27
5.1 Application 85– 27
5.2 Purpose 85– 27
5.3 Equipment Requirements 85– 27
5.4 Starting of a Cold Boiler 85– 29
5.5 Operating Systems 85– 30
5.6 Simultaneous Firing of Oil and Gas Fuels 85– 37
5.7 Simultaneous Firing of Oil and Gas for Fuel Transfer Only 85– 39
5.8 Dual Oil Atomizers in a Single Burner 85– 41

Chapter 6 Multiple Burner Boilers 85– 41
6.1 Application 85– 41
6.2 Purpose 85– 42
6.3 Mechanical Equipment Requirements 85– 42
6.4 Burner Management and Combustion Control Requirements 85– 42
6.5 Furnace Implosion Protection 85– 51
6.6 Fuel Gas Systems 85– 53
6.7 Fuel Oil Systems 85– 62
6.8 Pulverized Coal Systems 85– 71
6.9 Selective Catalytic Reduction (SCR) Systems with Bypass Capability 85– 80

Chapter 7 Atmospheric Fluidized Bed Boilers 85– 80
7.1 Application 85– 80
7.2 Purpose 85– 80
7.3 General 85– 80
7.4 Equipment Requirements 85– 81
7.5 Furnace Pressure Excursion Prevention ... 85– 87
7.6 Sequence of Operations 85– 89
7.7 Sequence of Operations for Gas-Fired Warm-Up Burners 85– 94
7.8 Sequence of Operations for Oil-Fired Warm-Up Burners 85– 99
7.9 Interlock System 85–106
7.10 Alarm System 85–112

Chapter 8 Heat Recovery Steam Generators and Other Combustion Turbine Exhaust Systems 85–114
8.1 Application 85–114
8.2 Purpose 85–114
8.3 Project Coordination 85–114
8.4 Equipment 85–114
8.5 HRSG Enclosure and Other Combustion Turbine Exhaust Systems 85–117
8.6 Electrical 85–117
8.7 Controls, Monitoring, Alarms, and Interlocks 85–118
8.8 Purge, Start-up, Operation, and Shutdown of HRSG and Other Combustion Turbine Exhaust Systems 85–120
8.9 Combustion Turbine Exhaust Bypass Systems 85–125
8.10 Combustion Turbine and HRSG with Fresh Air Firing Capability 85–126
8.11 Combustion Turbine Exhaust System 85–127

Chapter 9 Pulverized Fuel Systems 85–128
9.1 Application 85–128
9.2 Purpose 85–128
9.3 General 85–128

Copyright 2014 National Fire Protection Association (NFPA). Licensed, by agreement, for individual use and download on October 4, 2014 to LEADER and READER for designated user PATTARAPORN SRITRAKOOL. No other reproduction or transmission in any form permitted without written permission of NFPA. For inquires or to report unauthorized use, contact licensing@nfpa.org.

9.4 Design 85–128
9.5 Operation 85–141
9.6 Special Systems 85–143

Chapter 10 Stokers 85–148
10.1 Purpose 85–148
10.2 Fuel-Burning System 85–148
10.3 Combustion Control System 85–148
10.4 Operation 85–149
10.5 Furnace Inspection 85–151
10.6 On-Line Maintenance 85–151
10.7 Access Doors or Observation Ports 85–151
10.8 Ash Hopper Access Doors 85–151
10.9 Ash Handling 85–151

Annex A Explanatory Material 85–151

Annex B Multiple Burner Boiler Supervised Manual Systems 85–185

Annex C Multiple Burner Boiler Fundamental Principles of a Manual System 85–198

Annex D Multiple Burner Boiler Low NO_x Operation — Special Considerations 85–207

Annex E Industry Experience (Reserved) 85–208

Annex F Solid Fuel Firing in Stokers 85–208

Annex G Stoker Descriptions 85–210

Annex H Guidelines for Determining the Minimum Permitted Temperature for Feeding a Fuel into a Fluidized Bed 85–214

Annex I Sample Ordinance Adopting NFPA 85 85–215

Annex J Safety 85–216

Annex K Fuel Hazards 85–217

Annex L Personnel Hazards of Atmospheric Fluidized Bed Boilers 85–220

Annex M Origin and Development of NFPA 85 85–222

Annex N Informational References 85–223

Index 85–225

Copyright 2014 National Fire Protection Association (NFPA). Licensed, by agreement, for individual use and download on October 4, 2014 to LEADER and READER for designated user PATTARAPORN SRITRAKOOL. No other reproduction or transmission in any form permitted without written permission of NFPA. For inquires or to report unauthorized use, contact licensing@nfpa.org.

NFPA 85

Boiler and Combustion Systems Hazards Code

2011 Edition

IMPORTANT NOTE: This NFPA document is made available for use subject to important notices and legal disclaimers. These notices and disclaimers appear in all publications containing this document and may be found under the heading "Important Notices and Disclaimers Concerning NFPA Documents." They can also be obtained on request from NFPA or viewed at www.nfpa.org/disclaimers.

NOTICE: An asterisk (*) following the number or letter designating a paragraph indicates that explanatory material on the paragraph can be found in Annex A.

Changes other than editorial are indicated by a vertical rule beside the paragraph, table, or figure in which the change occurred. These rules are included as an aid to the user in identifying changes from the previous edition. Where one or more complete paragraphs have been deleted, the deletion is indicated by a bullet (•) between the paragraphs that remain.

A reference in brackets [ ] following a section or paragraph indicates material that has been extracted from another NFPA document. As an aid to the user, the complete title and edition of the source documents for extracts in mandatory sections of the document are given in Chapter 2 and those for extracts in informational sections are given in Annex N. Extracted text may be edited for consistency and style and may include the revision of internal paragraph references and other references as appropriate. Requests for interpretations or revisions of extracted text shall be sent to the technical committee responsible for the source document.

Information on referenced publications can be found in Chapter 2 and Annex N.

Chapter 1 Administration

1.1* Scope. This code applies to the following:

(1) Single burner boilers, multiple burner boilers, stokers, and atmospheric fluidized bed boilers with a fuel input rating of 3.7 MWt (12.5 million Btu/hr) or greater
(2) Pulverized fuel systems at any heat input rate
(3) Fired or unfired steam generators used to recover heat from combustion turbines [heat recovery steam generators (HRSGs)] and other combustion turbine exhaust systems at any heat input rate

1.1.1 This code covers design, installation, operation, maintenance, and training.

1.1.2 This code covers strength of the structure, operation and maintenance procedures, combustion and draft control equipment, safety interlocks, alarms, trips, and other related controls that are essential to safe equipment operation.

1.1.3 This code does not cover process heaters used in chemical and petroleum manufacture in which steam generation is incidental to the operation of a processing system.

1.1.4 Chapter 5 covers single burner boilers that fire the following fuels:

(1) Fuel gas as defined in 3.3.74.
(2)*Other gas having a calorific value and characteristics similar to natural gas
(3) Fuel oil as defined in 3.3.73.3
(4) Fuel gas and fuel oil that are fired simultaneously for fuel transfer
(5) Fuel gas and fuel oil that are fired simultaneously and continuously

1.1.5 Chapter 6 covers multiple burner boilers firing one or more of the following:

(1) Fuel gas, as defined in 3.3.74
(2) Fuel oil, as defined in 3.3.73.3
(3) Pulverized coal, as defined in 3.3.73.2.1
(4) Simultaneous firing of more than one of the fuels stated in 1.1.5(1) through 1.1.5(3)

1.1.6 Chapter 7 covers atmospheric fluidized bed boilers.

1.1.7* Chapter 8 covers HRSG systems and other combustion turbine exhaust systems.

1.1.8 Chapter 9 covers pulverized fuel systems, beginning with the raw fuel bunker, which is upstream of the pulverizer and is the point at which primary air enters the pulverizing system, and terminating at the point where pressure can be relieved by fuel being burned or collected in a device that is built in accordance with this code. The pulverized fuel system shall include the primary air ducts, which are upstream of the pulverizer, to a point where pressure can be relieved.

1.1.9 Chapter 10 covers boilers that use a stoker to fire the following fuels:

(1) Coal
(2) Wood
(3) Refuse-derived fuel (RDF)
(4) Municipal solid waste (MSW)
(5) Other solid fuels

1.1.9.1 Where solid fuel is fired simultaneously with other fuels (e.g., a solid fuel stoker fired in combination with fuel gas, fuel oil, or pulverized auxiliary fuel), additional controls and interlocks shall include those covered in Chapters 5, 6, and 9.

Exception No. 1: The purge requirements of Chapters 5 and 6 shall not be required when the stoker is firing and the boiler is on-line. In those cases, if no cooling air is being provided to the auxiliary burners, a purge of their associated air supply ducts shall be provided.

Exception No. 2: Where fuel oil or fuel gas is fired in a supervised manual system in accordance with Chapter 5, the excessive steam pressure interlock shall not be required.

1.2 Purpose.

1.2.1* The purpose of this code is to contribute to operating safety and to prevent uncontrolled fires, explosions, and implosions in equipment described in Section 1.1.

1.2.2 This code establishes minimum requirements for design, installation, operation, training, and maintenance.

1.3 Application.

1.3.1 This code shall apply to new installations and to major alterations or extensions that are contracted for subsequent to the effective date of this code.

1.3.2 This code shall not be used as a design handbook.

Copyright 2014 National Fire Protection Association (NFPA). Licensed, by agreement, for individual use and download on October 4, 2014 to LEADER and READER for designated user PATTARAPORN SRITRAKOOL. No other reproduction or transmission in any form permitted without written permission of NFPA. For inquires or to report unauthorized use, contact licensing@nfpa.org.

1.3.2.1 A designer capable of applying more complete and rigorous analysis to special or unusual problems shall have latitude in the development of such designs.

1.3.2.2 In such cases, the designer shall be responsible for demonstrating and documenting the validity of the proposed design.

1.3.3 Coordination of the design and operating procedures, control systems, interlocks, and structural design of the boiler furnace or HRSG system and any flue gas cleanup systems downstream of the postcombustion gas passes shall be required. Such coordination shall include requirements for ensuring a continuous flow path from the combustion air inlet through the stack.

1.4* Retroactivity. The provisions in this code reflect a consensus, at the time the code was issued, of what is necessary to provide an acceptable degree of protection from the hazards addressed in this code.

1.4.1 Unless otherwise specified, the provisions in this code shall not apply to facilities, equipment, structures, or installations that existed or were approved for construction or installation prior to the effective date of the code. Where specified, the provisions in this code shall be retroactive.

1.4.2 In those cases where the authority having jurisdiction determines that the existing situation presents an unacceptable degree of risk, the authority having jurisdiction shall be permitted to apply retroactively any portions of this code deemed appropriate.

1.4.3 The retroactive requirements of this code shall be permitted to be modified if their application clearly would be impractical in the judgment of the authority having jurisdiction and only where it is clearly evident that a reasonable degree of safety is provided.

1.5 Equivalency. Nothing in this code is intended to prevent the use of systems, methods, or devices of equivalent or superior quality, strength, fire resistance, effectiveness, durability, and safety over those prescribed by this code.

1.5.1 Technical documentation shall be submitted to the authority having jurisdiction to demonstrate equivalency.

1.5.2 The system, method, or device shall be approved for the intended purpose by the authority having jurisdiction.

1.6 Enforcement. This code shall be administered and enforced by the authority having jurisdiction designated by the governing authority. *(See Annex I for sample wording for enabling legislation.)*

Chapter 2 Referenced Publications

2.1 General. The documents or portions thereof listed in this chapter are referenced within this code and shall be considered part of the requirements of this document.

2.2 NFPA Publications. National Fire Protection Association, 1 Batterymarch Park, Quincy, MA 02169-7471.

NFPA 30, *Flammable and Combustible Liquids Code,* 2008 edition.

NFPA 31, *Standard for the Installation of Oil-Burning Equipment,* 2006 edition.

NFPA 54, *National Fuel Gas Code,* 2009 edition.

NFPA 69, *Standard on Explosion Prevention Systems,* 2008 edition.

NFPA 70® , *National Electrical Code®,* 2008 edition.

2.3 Other Publications.

2.3.1 ASCE Publications. American Society of Civil Engineers, 1801 Alexander Bell Drive, Reston, VA 20191-4400.

ASCE 7, *Minimum Design Loads for Buildings and Other Structures*, 2005.

2.3.2 ASME Publications. American Society of Mechanical Engineers, Three Park Avenue, New York, NY 10016-5990.

ASME B31.1, *Power Piping*, 2007.

ASME B31.3, *Process Piping*, 2006.

2.3.3 ASTM Publications. ASTM International, 100 Barr Harbor Drive, P.O. Box C700, West Conshohocken, PA 19428-2959.

ASTM D 388, *Standard Classification of Coals by Rank*, 2005.

ASTM D 396, *Standard Specification for Fuel Oils*, 2009.

ASTM D 409, *Standard Test Method for Grindability of Coal by the Hardgrove-Machine Method*, 2009.

ASTM D 1655, *Standard Specification for Aviation Turbine Fuels*, 2009.

ASTM D 2880, *Standard Specification for Gas Turbine Fuel Oils*, 2003.

2.3.4 CGA Publications. Compressed Gas Association, 4221 Walney Road, 5th floor, Chantilly, VA 20151-2923.

CGA G-2.1/ANSI K61.1, *Safety Requirements for the Storage and Handling of Anhydrous Ammonia*, 1999

2.3.5 FCI Publications. Fluid Controls Institute, 1300 Sumner Avenue, Cleveland, OH 44115.

ANSI/FCI 70-2, *Control Valve Seat Leakage*, 2006.

2.3.6 Military Specifications. Department of Defense Single Stock Point, Document Automation and Production Service, Building 4/D, 700 Robbins Avenue, Philadelphia, PA 19111-5094.

MIL-T-5624, *Turbine Fuel, Aviation, Grade JP4, JP5, and JP5/JP8 ST*, 1995.

2.3.7 Other Publications.

Merriam-Webster's Collegiate Dictionary, 11th edition, Merriam-Webster, Inc., Springfield, MA, 2003.

2.4 References for Extracts in Mandatory Sections.

NFPA 13D, *Standard for the Installation of Sprinkler Systems in One- and Two-Family Dwellings and Manufactured Homes,* 2010 edition.

NFPA 40, *Standard for the Storage and Handling of Cellulose Nitrate Film,* 2007 edition.

NFPA 72®, *National Fire Alarm and Signaling Code,* 2010 edition.

NFPA 850, *Recommended Practice for Fire Protection for Electric Generating Plants and High Voltage Direct Current Converter Stations,* 2010 edition.

Chapter 3 Definitions

3.1 General. The definitions contained in this chapter shall apply to the terms used in this code. Where terms are not defined in this chapter or within another chapter, they shall be defined using their ordinarily accepted meanings within the context in which they are used. *Merriam-Webster's Collegiate Dictionary*, 11th edition, shall be the source for the ordinarily accepted meaning.

Copyright 2014 National Fire Protection Association (NFPA). Licensed, by agreement, for individual use and download on October 4, 2014 to LEADER and READER for designated user PATTARAPORN SRITRAKOOL. No other reproduction or transmission in any form permitted without written permission of NFPA. For inquires or to report unauthorized use, contact licensing@nfpa.org.

3.2 NFPA Official Definitions.

3.2.1* Approved. Acceptable to the authority having jurisdiction.

3.2.2* Authority Having Jurisdiction (AHJ). An organization, office, or individual responsible for enforcing the requirements of a code or standard, or for approving equipment, materials, an installation, or a procedure.

3.2.3* Code. A standard that is an extensive compilation of provisions covering broad subject matter or that is suitable for adoption into law independently of other codes and standards.

3.2.4 Labeled. Equipment or materials to which has been attached a label, symbol, or other identifying mark of an organization that is acceptable to the authority having jurisdiction and concerned with product evaluation, that maintains periodic inspection of production of labeled equipment or materials, and by whose labeling the manufacturer indicates compliance with appropriate standards or performance in a specified manner.

3.2.5* Listed. Equipment, materials, or services included in a list published by an organization that is acceptable to the authority having jurisdiction and concerned with evaluation of products or services, that maintains periodic inspection of production of listed equipment or materials or periodic evaluation of services, and whose listing states that either the equipment, material, or service meets appropriate designated standards or has been tested and found suitable for a specified purpose.

3.2.6 Shall. Indicates a mandatory requirement.

3.2.7 Should. Indicates a recommendation or that which is advised but not required.

3.2.8 Standard. A document, the main text of which contains only mandatory provisions using the word "shall" to indicate requirements and which is in a form generally suitable for mandatory reference by another standard or code or for adoption into law. Nonmandatory provisions shall be located in an appendix or annex, footnote, or fine-print note and are not to be considered a part of the requirements of a standard.

3.3 General Definitions.

3.3.1 Agglomerating. A characteristic of coal that causes coking on the fuel bed during volatilization.

3.3.2 Agglomeration. Alkali compounds can attach to bed material particles. These compounds can have low melting points and cause the bed particles to stick to each other to form agglomerates.

3.3.3 Air.

3.3.3.1 ***Auxiliary Air.*** Air that is supplied from an auxiliary source to maintain a minimum fuel mixture velocity in burner piping.

3.3.3.2 ***Combustion Air.*** Air used to react with the fuel in the combustion process. For duct burners, this generally is combustion turbine exhaust.

3.3.3.3 ***Design Full Load Mass Airflow.*** The air flow required to achieve nameplate full load. For the purposes of Chapter 6, it is the flow required to achieve nameplate full load based on the original design fuel as defined by the boiler equipment manufacturer.

3.3.3.4* ***Excess Air.*** Air supplied for combustion in excess of theoretical air.

3.3.3.5 ***Overfire Air.*** Air supplied for combustion that is admitted into the furnace at a point above the burners or fuel bed.

3.3.3.6 ***Primary Air.*** Air supplied for combustion that is admitted into the furnace through a burner premixed with the fuel.

3.3.3.6.1 ***Primary Air (in a Bubbling Fluidized Bed).*** That portion of total air used to transport or inject fuel or sorbent and to recycle material to the bed.

3.3.3.6.2 ***Primary Air (in a Circulating Fluidized Bed).*** That portion of total air introduced at the base of the combustor through the air distributor.

3.3.3.6.3 ***Primary Air (in a Pulverized Fuel System).*** In a pulverized fuel system, either air or a flue gas–air mixture; can simultaneously also be pulverizer air and/or transport air.

3.3.3.6.4 ***Primary Air (for the purposes of equipment within the scope of Chapter 8).*** The air that is contained in the combustion turbine exhaust.

3.3.3.7 ***Pulverizer Air.*** Air or inert gas that is introduced into the pulverizer to dry the fuel, aid in pulverization and classification, and convey the pulverized fuel from the pulverizer.

3.3.3.8 ***Seal Air.*** Air or inert gas supplied to any device at sufficient pressure for the specific purpose of minimizing contamination.

3.3.3.9 ***Secondary Air.*** Air for combustion supplied to the burners or fuel bed in addition to the primary air.

3.3.3.9.1 ***Secondary Air (in a Bubbling Fluidized Bed).*** That portion of the air introduced through the air distributor.

3.3.3.9.2 ***Secondary Air (in a Circulating Fluidized Bed).*** That air entering the combustor at levels above the air distributor.

3.3.3.9.3 ***Secondary Air (in a Single or Multiple Burner Boiler).*** That portion of the air entering through the air registers.

3.3.3.10 ***Tempering Air.*** Cool air added to the hot primary air or gas to modify its temperature.

3.3.3.11 ***Theoretical Air.*** The chemically correct quantity of air needed for complete combustion of a given quantity of a specific fuel.

3.3.3.12 ***Transport Air.*** Air or inert gas that is used to convey pulverized fuel.

3.3.3.12.1 ***Transport Air (in a Fluidized Bed).*** The air used to convey or inject solid fuel or sorbent or to recycle material.

3.3.3.13 ***Undergrate Air.*** Combustion air introduced below the grate.

3.3.4 Air Change. A quantity of air, provided through a fuel burner, equal to the volume of furnace and boiler gas passes.

3.3.5 Air-Rich. Indicating a ratio of air to fuel supplied to a combustion chamber that provides more than the minimum excess air needed for optimum combustion of the fuel.

3.3.6 Alarm. An audible or visible signal indicating an off-standard or abnormal condition.

Copyright 2014 National Fire Protection Association (NFPA). Licensed, by agreement, for individual use and download on October 4, 2014 to LEADER and READER for designated user PATTARAPORN SRITRAKOOL. No other reproduction or transmission in any form permitted without written permission of NFPA. For inquires or to report unauthorized use, contact licensing@nfpa.org.

3.3.7 Alteration. A change or modification that results in a deviation from the original design specifications or criteria.

3.3.8 Annunciator. A device indicating an off-standard or abnormal condition by both visual and audible signals.

3.3.9 Atmospheric Fluidized-Bed Combustion. A fuel-firing technique using a fluidized bed operating at near-atmospheric pressure on the fire side.

3.3.10 Atomizer. The device in a burner that breaks down liquid fuel into a finely divided state.

3.3.10.1 ***Mechanical Atomizer.*** The device in a burner that breaks down liquid fuel into a finely divided state without using an atomizing medium.

3.3.11 Atomizing Medium. A supplementary fluid, such as steam or air, that assists in breaking down liquid fuel into a finely divided state.

3.3.12 Augmented Air Firing. Supplementary firing with the addition of air at the duct burners to support and stabilize combustion or to reduce emissions.

3.3.13* Autoignition Temperature (AIT). The minimum temperature required to initiate or cause self-sustained combustion of a solid, liquid, or gas independently of the heating or heated element.

3.3.14 Bed Compartments. Segments of a fluidized bed, which might be individually controlled with respect to combustion airflow and fuel feed.

3.3.15 Bed Drain. An opening provided in the enclosure of a fluidized bed for the removal of spent bed material and any tramp material.

3.3.16 Bed Material. Granular particles that compose a fluidized bed.

3.3.17 Bed Temperature. The average temperature of a fluidized bed.

3.3.18 Bin. An enclosure to store pulverized fuel.

3.3.19 Bin System (Storage System). A system in which the fuel is pulverized and stored in bins from which it is withdrawn through feeders, as needed, for burning.

3.3.20 Boiler. A closed vessel in which water is heated, steam is generated, steam is superheated, or any combination thereof by the application of heat from combustible fuels in a self-contained or attached furnace.

3.3.21 Boiler Enclosure. The physical boundary for the combustion process and boiler pressure parts up to the initial transition to flues as defined by the boiler manufacturer.

3.3.22 Bottom Air Admission. A method of introducing air to a chain or traveling grate stoker under the stoker.

3.3.23 Bubbling Fluidized Bed (BFB). A fluidized bed in which the fluidizing velocity is less than the terminal velocity of individual bed particles and in which part of the fluidizing gas passes through the bed as bubbles.

3.3.24 Bunker. An enclosure to store raw fuel.

3.3.25 Burner. A device or group of devices for the introduction of fuel and air into a combustion chamber at the velocity, turbulence, and concentration required to maintain ignition and combustion of fuel.

3.3.25.1 ***Auxiliary Load-Carrying Burner.*** In a fluidized bed boiler, a burner whose primary purpose is load carrying, that is located over the bed, and that has its own air supply.

3.3.25.2* ***Duct Burner.*** A burner, mounted in a duct or discharging into a duct, used to heat the air, flue gas, or combustion turbine exhaust gas in the duct.

3.3.25.3 ***Over Bed Burner.*** In a fluidized bed boiler, a warm-up burner located above the bed and firing over or into the bed.

3.3.25.4 ***Warm-Up Burner (Warm-Up Gun).*** A burner, usually smaller than the main burner, that is ignited by another ignition source and used to warm up the boiler. In cases where it is used as an igniter, its classification is verified by test.

3.3.25.4.1 ***Warm-Up Burner (in a Fluidized Bed Boiler).*** A burner having its own air supply used to warm up the bed to the ignition temperature of the main fuel. The warm-up burner also can be used for limited load carrying.

3.3.26* Burner Management System. The field devices, logic system, and final control elements dedicated to combustion safety and operator assistance in the starting and stopping of fuel preparation and burning equipment and for preventing misoperation of and damage to fuel preparation and burning equipment.

3.3.26.1 ***Automatic Burner Management System — Nonrecycling.*** A burner management system by which a furnace is purged and a burner is started, ignited, and stopped automatically but does not recycle automatically.

3.3.26.2 ***Automatic Burner Management System — Recycling.*** A burner management system by which a furnace is purged and a burner is started, ignited, and stopped automatically and recycles on a preset pressure range.

3.3.26.3 ***Manual Burner Management System.*** A burner management system by which a furnace is purged and a burner is started, ignited, and stopped manually.

3.3.26.4 ***Manual, Supervised Burner Management System.*** A burner management system by which a furnace is purged and a burner is started, ignited, and stopped manually. Interlocks are included to ensure that the operation follows established, proper procedures.

3.3.27 Bypass Stack. A stack applied in addition to and separate from the normal HRSG exhaust stack that allows combustion turbine exhaust gas to flow independently to the atmosphere.

3.3.28 Calcination. The endothermic chemical reaction that takes place when converting calcium carbonate or calcium hydroxide to calcium oxide.

3.3.29 Calcium to Sulfur Molar Ratio (Ca/S). The ratio of the total moles of calcium in the sorbent fed to the boiler to the total moles of sulfur in the fuel fed to the boiler.

3.3.30 Char. The unburned combustibles in solid form combined with a portion of the fuel ash and sorbent.

3.3.31 Cinder Return. In a stoker-fired boiler, an apparatus for the return of collected cinders to the furnace, either directly or with the fuel.

3.3.32 Circulating Fluidized Bed (CFB). A fluidized bed in which the fluidizing velocities exceed the terminal velocity of individual bed particles.

Copyright 2014 National Fire Protection Association (NFPA). Licensed, by agreement, for individual use and download on October 4, 2014 to LEADER and READER for designated user PATTARAPORN SRITRAKOOL. No other reproduction or transmission in any form permitted without written permission of NFPA. For inquires or to report unauthorized use, contact licensing@nfpa.org.

3.3.33 Classifier. A device to control pulverized fuel particle size distribution.

3.3.34 Coal. See 3.3.73.2.

3.3.35 Coking Plate. A plate adjacent to a grate through which no air passes and on which coal is placed for distilling the coal volatiles before the coal is moved onto the grate.

3.3.36 Combustion Chamber. The portion of the boiler or HRSG enclosure into which the fuel is fed, ignited, and burned.

3.3.37 Combustion Turbine. A turbine in which the rotating element is actuated by the pressure of combustion gases on curved vanes.

3.3.38* Combustion Turbine Exhaust Systems. A HRSG, a heat exchanger, or an emissions control system, alone or in combination, and associated ductwork between the combustion turbine exhaust and the stack inlet.

3.3.39 Combustion Turbine Runback. The controlled unloading of a combustion turbine to a level required by HRSG or other equipment control demands.

3.3.40 Commercial Operation. The date that the full plant capacity is formally added to the power grid.

3.3.41 Commissioning. The time period of plant testing and operation between initial operation and commercial operation.

3.3.42 Confined Space. Any work location or enclosure in which either of the following exists: (1) the dimensions are such that a person who is 1.8 m (6 ft) tall cannot stand up in the middle of the space or extend his or her arms in all directions without hitting the enclosure, or (2) access to or from the enclosure is by manhole, hatch, port, or other relatively small opening that limits ingress and egress to one person at a time. Confined spaces include but are not limited to the following: pulverizers, ducts, heaters, windboxes, cyclones, coal dust collectors, furnaces, bunkers, bins, and HRSGs.

3.3.43 Continuous Trend Display. A dedicated visual display of an operating trend(s) by any instrument such as a cathode ray tube (CRT), chart recorder, or other device to quantify changes in the measured variable(s).

3.3.44 Control System.

3.3.44.1 ***Boiler Control System.*** The group of control systems that regulates the boiler process, including the combustion control system but not the burner management system.

3.3.44.2 ***Combustion Control System.*** The control system that regulates the furnace fuel and air inputs to maintain the air-fuel ratio within the limits that are required for continuous combustion and stable flame throughout the operating range of the boiler in accordance with demand.

3.3.44.2.1 ***Combustion Control System in a Fluidized Bed.*** In a fluidized bed, the control system that regulates the furnace fuel input, furnace air input, bed inventory, and other bed heat transfer mechanisms to maintain the bed temperature and the air-fuel ratio within the limits necessary for continuous combustion and stable bed operation throughout the operating range of the boiler in accordance with demand.

3.3.44.2.2 ***Combustion Control System in HRSG Systems.*** In HRSG systems, the control system that regulates the fuel input and air, where applicable, to maintain continuous combustion and stable flame.

3.3.44.3 ***HRSG Control System.*** The group of control systems that regulate the HRSG process, including the combustion control system but not the burner management system.

3.3.44.4 ***Start-Up Combustion Control System.*** A control system used to regulate and maintain proper air-fuel ratio during the start-up period where the customary indexes, such as pressure, temperature, load, or flow, that motivate the normal automatic combustion control system are not available or suitable.

3.3.45 Crusher. A device for reducing the size of solid fuels.

3.3.46 Damper. A valve or plate for controlling draft or the flow of gases, including air.

3.3.46.1 ***Shutoff Damper.*** A close-fitting damper to prevent flow and minimize leakage of air or flue gas into any system component.

3.3.47 Design Full Load Mass Airflow. See 3.3.3.3.

3.3.48 Direct Fired System (Unit System). A system in which the fuel is pulverized and delivered in suspension directly to the burner(s).

3.3.49 Directional Blocking. An interlock that, upon detection of a significant error in furnace pressure or HRSG process variables, acts to inhibit the movement of all appropriate final control elements in the direction that would increase the error.

3.3.50 Distributor/Divider. A device that splits a single stream of pulverized coal and primary air into two or more streams.

3.3.51 Drag Seal. In a chain grate stoker, the hinged plate resting against the returning chain and used to seal the air compartments.

3.3.52 Drip Leg. A chamber of ample volume, with suitable cleanout and drain connections, over which fuel gas is passed so that liquids and solids are trapped.

3.3.53 Dump Plate. In a stoker-fired furnace, an ash-supporting plate from which ashes can be discharged from one side of the plate by rotation of the plate.

3.3.54 Dust Collector. An auxiliary separator that is used to separate the fuel dust from the air or inert gas prior to discharge of the latter from the system.

3.3.55 Elutriation. The selective removal of fine solids from a fluidized bed by entrainment in the upward flowing products of combustion.

3.3.56 Exhauster. See 3.3.60.2, Exhauster Fan.

3.3.57 Explosion Vent. A vent to relieve explosion pressures resulting from ignition of a mixture of decomposition gases and air. [**40,** 2007]

3.3.58 Explosive Mixture. A flammable or combustible mixture in a confined space.

3.3.59 False Start. A condition where the combustion turbine fails to complete its ignition sequence (failure to start) and can result in unburned fuels entering the HRSG enclosure or other combustion turbine exhaust systems.

Copyright 2014 National Fire Protection Association (NFPA). Licensed, by agreement, for individual use and download on October 4, 2014 to LEADER and READER for designated user PATTARAPORN SRITRAKOOL. No other reproduction or transmission in any form permitted without written permission of NFPA. For inquires or to report unauthorized use, contact licensing@nfpa.org.

3.3.60 Fan.

3.3.60.1 ***Booster Fan.*** A device used to assist in the supply of air to, or the removal of flue gas products from, the combustion chamber or to supplement draft capability to achieve required flow through the combustion air or flue gas flow path.

3.3.60.2 ***Exhauster Fan.*** A fan located at the pulverizer outlet used to draw the primary air through the pulverizer and to deliver the primary air–fuel mixture to the burner(s) or other apparatus.

3.3.60.3 ***Forced Draft (FD) Fan.*** A device used to pressurize and supply ambient air to the combustion chamber to support combustion. In a fluidized bed boiler, FD fans generally include both primary air and secondary air fans.

3.3.60.4 ***Induced Draft (ID) Fan.*** A device used to remove the products of combustion from the boiler or HRSG by introducing a negative pressure differential.

3.3.60.5 ***Primary Air Fan.*** A fan used to supply coal transport air to the pulverizer or to the burner lines of a storage system.

3.3.60.6 ***Seal Air Fan.*** A fan used to supply sealing air.

3.3.61 Fan Override Action. A control that, upon detection of significant error in combustion chamber pressure, acts to reposition the induced draft fan control device(s) in a direction to reduce the error.

3.3.62 Fan Test Block Capability. The point on the fan head versus flow characteristic curve at which the fan is selected. This is the calculated operating point associated with the maximum continuous rating of the boiler or HRSG, plus the head and flow margins.

3.3.63 Feed-Forward Signal. A signal used to anticipate a change in the measured variable.

3.3.64 Flame. A body or stream of gaseous material involved in the combustion process and emitting radiant energy at specific wavelength bands determined by the combustion chemistry of the fuel. In most cases, some portion of the emitted radiant energy is visible to the human eye. [***72,*** 2010]

3.3.65 Flame Detector. A device that senses the presence or absence of flame and provides a usable signal.

3.3.65.1 ***Self-Checking Flame Detector.*** A flame detector that automatically, and at regular intervals, tests the entire sensing and signal processing system of the flame detector.

3.3.66 Flame Envelope. The confines (not necessarily visible) of an independent process that converts fuel and air into products of combustion.

3.3.67 Fluidize. To maintain a bed of finely divided solid particles in a mobile suspension by blowing air or gas through the bed at such a velocity that the particles separate and behave much like a fluid.

3.3.68 Fluidized Bed. A bed of granular particles maintained in a mobile suspension by the velocity of an upward flow of air or gas.

3.3.69 Fly Carbon Reinjection. In a stoker-fired boiler, the process of removing the coarse carbon-bearing particles from the particulate matter carried over from the furnace and returning the carbonaceous material to the furnace to be combusted.

3.3.70 Freeboard. In a fluidized bed boiler, the space or volume above the upper surface of the bubbling bed and below the entrance to the convection pass.

3.3.71 Fresh Air Firing. The operation of a HRSG with air instead of combustion turbine exhaust.

3.3.72 Friability. The tendency of coal to crumble or break into small pieces.

3.3.73 Fuel.

3.3.73.1 ***Auxiliary Fuel.*** In a fluidized bed boiler, generally a gaseous or liquid fuel used to warm the bed material sufficiently to allow ignition of the main fuel upon injection into the heated bed material.

3.3.73.2 ***Coal.*** A solid fuel classified as lignite, subbituminous, bituminous, or anthracite as defined by ASTM D 388, *Standard Classification of Coals by Rank.*

3.3.73.2.1 ***Pulverized Coal.*** Coal that is reduced to a size such that at least 50 percent can pass through a 200-mesh (74 microns) sieve.

3.3.73.3 ***Fuel Oil (Oil Fuel).*** Liquid fuels defined as Grades 2, 4, 5, or 6 in ASTM D 396, *Standard Specification for Fuel Oils*, or as Grade 2GT in ASTM D 2880, *Standard Specification for Gas Turbine Fuel Oils.*

3.3.73.4 ***Hogged Fuel.*** Wood refuse that has been chipped or shredded by a machine known as a hog.

3.3.73.5 ***JP4.*** A light, volatile fuel with a boiling point between that of gasoline and of light distillate. Its properties are defined in MIL-T-5624, *Turbine Fuel, Aviation, Grade JP4, JP5, and JP5/JP8 ST*, and are similar to ASTM D 1655, *Standard Specification for Aviation Turbine Fuels* (Jet B), and ASTM D 2880, *Standard Specification for Gas Turbine Fuel Oils.*

3.3.73.6 ***Kerosene.*** A light, highly refined fuel that is slightly more volatile than No. 2 fuel oil. Its properties are defined in ASTM D 396, *Standard Specification for Fuel Oils*; ASTM D 1655, *Standard Specification for Aviation Turbine Fuels*; or ASTM D 2880, *Standard Specification for Gas Turbine Fuel Oils.*

3.3.73.7 ***LP-Gas.*** A material that is composed predominantly of any of the following hydrocarbons or mixtures thereof: propane, propylene, n-butane, isobutane, and butylenes.

3.3.73.8 ***Main Fuel.*** In a fluidized bed boiler, gaseous, liquid, or solid fuel introduced into the bed after the bed temperature has reached a value sufficient to support its combustion and that is used during the normal operation of the boiler. Main fuels necessitate the use of the fluidized hot bed as their ignition source.

3.3.73.9 ***Municipal Solid Waste (MSW).*** Solid waste materials consisting of commonly occurring residential and light commercial waste. [**850,** 2010]

3.3.73.10 ***Natural Gas.*** A gaseous fuel occurring in nature and consisting mostly of a mixture of organic compounds, normally methane, ethane, propane, and butane. The calorific value of natural gases varies between about 26.1 MJ/m^3 and 55.9 MJ/m^3 (700 Btu/ft^3 and 1500 Btu/ft^3), the majority averaging 37.3 MJ/m^3 (1000 Btu/ft^3).

3.3.73.11 ***Pulverized Fuel.*** Solid fuel that is reduced to a size such that at least 50 percent will pass through a 200-mesh (74 microns) sieve.

Copyright 2014 National Fire Protection Association (NFPA). Licensed, by agreement, for individual use and download on October 4, 2014 to LEADER and READER for designated user PATTARAPORN SRITRAKOOL. No other reproduction or transmission in any form permitted without written permission of NFPA. For inquires or to report unauthorized use, contact licensing@nfpa.org.

3.3.73.12 ***Refuse-Derived Fuel (RDF).*** A solid fuel prepared from municipal solid waste. The waste material is usually refined by shredding, air classification, magnetic separation, or other means. The fuel can be packed, chopped, pelletized, pulverized, or subject to other mechanical treatment.

3.3.73.13 ***Supplementary Fuel.*** Fuel burned to supply additional heat to the steam generator or to support combustion.

3.3.74 Fuel Gas (Gas Fuel). Gaseous fuels defined as Natural Gas (see 3.3.73.10) or LP-Gas (see 3.3.73.7).

3.3.75 Fuel-Rich. Indicating a ratio of air to fuel supplied to a furnace that provides less than the minimum excess air needed for optimum combustion of the fuel.

3.3.76 Fuel Trip. The automatic shutoff of a specific fuel as the result of an interlock or operator action.

3.3.77 Furnace. The portion of the boiler enclosure within which the combustion process takes place and wherein heat transfer occurs predominantly by radiation.

3.3.78 Gate (for Raw Fuel) (Silo Gate; Bunker Gate). A shutoff gate between the raw-fuel bunker and the raw-fuel feeder.

3.3.79 Grate. The surface on which fuel is supported and burned and through which air is passed for combustion.

3.3.79.1 ***Bars or Keys Grate.*** Those parts of the fuel-supporting surface arranged to admit air for combustion.

3.3.79.2 ***Hand-Fired Grate.*** A grate on which fuel is placed manually, usually by means of a shovel.

3.3.80 Grindability. The characteristic of solid fuel that indicates its relative ease of pulverization, as defined by ASTM D 409, *Standard Test Method for Grindability of Coal by the Hardgrove-Machine Method.*

3.3.81 Hardwired. The method of interconnecting signals or interlocks to a logic system or between logic systems using a dedicated interconnection for each individual signal. When the term *hardwired* is applied to the logic system itself, it refers to the method of using individual devices and interconnecting wiring to program and perform the logic functions without the use of software-based logic solvers.

3.3.82 Header. A pipe or duct through which liquid or gas is conveyed and supplied to or received from multiple branches.

3.3.83 Heat Recovery Steam Generator (HRSG). A heat exchanger that uses a series of heat transfer sections (e.g., superheater, evaporator, and economizer) positioned in the exhaust gas flow of a combustion turbine to recover heat and supply a rated steam flow at a required temperature and pressure.

3.3.83.1 ***HRSG Enclosure.*** All ductwork from the combustion turbine exhaust through the steam generator to the stack, including any bypass duct connection.

3.3.83.2 ***HRSG Purge.*** See 3.3.118.1, Combustion Turbine Purge; 3.3.118.3, Duct Burner (HRSG) Purge; and 3.3.119, Purge Rate.

3.3.83.3 ***HRSG System.*** The unit assembly from the combustion turbine inlet to the flue gas outlet to the atmosphere.

3.3.84 Hogged Fuel. See 3.3.73.4.

3.3.85 Igniter. A permanently installed device that provides proven ignition energy to light off the main burner.

3.3.85.1 ***Class 1 Igniter.*** An igniter that is applied to ignite the fuel input through the burner and to support ignition under any burner light-off or operating conditions. Its location and capacity are such that it will provide sufficient ignition energy, generally in excess of 10 percent of full load burner input, at its associated burner to raise any credible combination of burner inputs of both fuel and air above the minimum ignition temperature.

3.3.85.2 ***Class 2 Igniter.*** An igniter that is applied to ignite the fuel input through the burner under prescribed light-off conditions. It is also used to support ignition under low load or certain adverse operating conditions. The range of capacity of such igniters is generally 4 percent to 10 percent of full load burner fuel input.

3.3.85.3 ***Class 3 Igniter.*** A small igniter applied particularly to fuel gas and fuel oil burners to ignite the fuel input to the burner under prescribed light-off conditions. The capacity of such igniters generally does not exceed 4 percent of the full load burner fuel input.

3.3.85.4 ***Class 3 Special Igniter.*** A special Class 3 high energy electrical igniter capable of directly igniting the main burner fuel.

3.3.86 Inert Gas. Any gas that is nonflammable, chemically inactive, noncontaminating for the use intended, and oxygen deficient to the extent required.

3.3.87 Initial Operation. The first coordinated operation of the unit.

3.3.88 Interlock. A device, or an arrangement of devices, in which the operation of one part or one mechanism of the device or arrangement controls the operation of another part of another mechanism.

3.3.89 JP4. See 3.3.73.5.

3.3.90 Kerosene. See 3.3.73.6.

3.3.91 Lance. A device without its own air supply that provides fuel input directly into a fluidized bed.

3.3.92 Ledge Plate. A form of plate that is adjacent to and overlaps the edge of a stoker.

3.3.93 Light-Off Time Limit Timer. A device that is used on supervised manual burner management systems and that limits the allowable time between completion of purge and light-off.

3.3.94 Lock Hopper. A feeding device that incorporates a double pressure seal, thus enabling solids to be fed into a system with a higher pressure than the pressure existing in the solid's storage area. Also, a letdown device that incorporates a double pressure seal, thus enabling solids to be withdrawn from a system with a higher pressure than that existing downstream of the lock hopper.

3.3.95 Logic System. A system that provides outputs in a particular sequence in response to external inputs and internal decision-making elements.

3.3.96 Low Fire. The minimum fire rate that results in stable combustion.

3.3.97 LP-Gas. See 3.3.73.7.

3.3.98 Main Fuel Temperature Permit. The minimum fluidized bed temperature at which the main fuel can be introduced with resulting stable combustion.

Copyright 2014 National Fire Protection Association (NFPA). Licensed, by agreement, for individual use and download on October 4, 2014 to LEADER and READER for designated user PATTARAPORN SRITRAKOOL. No other reproduction or transmission in any form permitted without written permission of NFPA. For inquires or to report unauthorized use, contact licensing@nfpa.org.

3.3.99* Master Fuel Trip. An event resulting in the rapid shutoff of all fuel, including igniters; for HRSGs, an event resulting in the rapid shutoff of all fuel to the duct burners, including igniters.

3.3.100 Master Fuel Trip Relay. An electromechanical relay(s) utilized to trip all required equipment simultaneously when a master fuel trip is initiated.

3.3.101 Minimum Fluidization Velocity. In a fluidized bed, the lowest velocity sufficient to cause incipient fluidization.

3.3.102 Monitor. To sense and indicate a condition without initiating automatic corrective action.

3.3.103 Natural Gas. See 3.3.73.10.

3.3.104 Oil. See 3.3.73.3, Fuel Oil (Oil Fuel).

3.3.105 Open Flow Path. A continuous path for movement of an airstream from the forced draft fan inlet to the stack; in a HRSG or other combustion turbine exhaust system, a continuous path for movement of an airstream through the HRSG system or other combustion turbine exhaust systems.

3.3.106 Open Register Light-Off Procedure. A procedure for purging and lighting off a boiler under specified, controlled conditions.

3.3.107 Operating Range. The range between the maximum fuel input and minimum fuel input within which the burner flame can be maintained in a continuous and stable manner.

3.3.108 Overfire Air Port. An opening in a furnace wall to enable the introduction of an overfire airstream.

3.3.109 Partial Loss of Flame. Loss of flame at any of the separate flame envelopes or burners while flame is maintained at any of the other flame envelopes or burners.

3.3.110 Positive Means. The physical methods of satisfying a requirement.

3.3.111 Postpurge. A purge performed after the burner(s) is shut down.

3.3.112 Pressure/Air Lock. A device for transferring pulverized fuel between zones of different pressure without permitting appreciable flow of air or gas in either direction.

3.3.113 Primary Air Fan (Pulverizer Air Fan). See 3.3.60.5, Primary Air Fan.

3.3.114 Prove. To establish by measurement or test the existence of a specified condition such as flame, level, flow, pressure, or position.

3.3.115 Pulverized Fuel. See 3.3.73.11.

3.3.116 Pulverized Fuel Pump. A device or system for transporting fuel mechanically or pneumatically by utilizing minimum airflow.

3.3.117 Pulverizer. A machine for reducing the particle size of a solid fuel so that it burns in suspension.

3.3.118 Purge. A flow of air or an inert medium at a rate that will effectively remove any gaseous or suspended combustibles and replace them with the purging medium.

3.3.118.1 ***Combustion Turbine Purge.*** A flow of air at purge rate through the combustion turbine and the appropriate portion of the HRSG enclosure or other combustion turbine exhaust systems for a number of volume changes sufficient to effectively remove any gaseous or suspended combustibles and replace them with the air.

3.3.118.2 ***Combustion Turbine Purge Credit.*** A condition established by maintaining a set of parameters following a combustion turbine normal shutdown.

3.3.118.3 ***Duct Burner (HRSG) Purge.*** A flow of combustion turbine exhaust gas or air at purge rate through the HRSG enclosure for a number of volume changes sufficient to effectively remove any gaseous or suspended combustibles and replace them with the purging medium.

3.3.119 Purge Rate. A constant flow of purging medium at velocity sufficient to achieve a purge.

3.3.120 Raw Fuel Feeder. A device for supplying a controlled amount of raw fuel.

3.3.121 Reburn. The process of admitting fuel downstream of the main burners to create a fuel-rich zone where chemical reactions reduce NO_x to molecular nitrogen.

3.3.122 Reburn Injector. A device that introduces fuel without combustion air into a furnace for the purpose of reducing NO_x emissions from the furnace.

3.3.123 Recirculation (Solids or Recycle). The reintroduction of solid material extracted from the products of combustion into a fluidized bed.

3.3.124 Recycle. A single burner boiler start-up that is initiated by steam pressure or water temperature following a normal shutdown.

3.3.125 Recycle Rate. In a fluidized bed, the rate at which a mass of material is reinjected into the bed. This value is often expressed as the ratio of the amount being reinjected to the total amount being elutriated from the fluidized bed.

3.3.126 Recycle Ratio. In a fluidized bed, the mass of material being reinjected into the bed divided by the mass of fuel being fed into the bed.

3.3.127 Refuse-Derived Fuel (RDF). See 3.3.73.12.

3.3.128 Register (Burner Air). A set of dampers for a burner, or air supply system to a particular burner, used to distribute the combustion air admitted to the combustion chamber. Frequently controls the direction and velocity of the airstream for efficient mixing with the incoming fuel.

3.3.129 Reinjection. In a fluidized bed boiler, the return or recycling of material removed or carried from the furnace back to the furnace. Also refers to fly ash collected and returned to the furnace or combustion chamber, sometimes expressed as a percentage of the total collected.

3.3.130 Remote Operation. Control from a location removed from the combustion area.

3.3.131 Repair. A process that returns the combustion system or subsystem to its original design specifications or criteria.

3.3.132 Repeatability. The ability of a device to maintain a constant set point characteristic.

3.3.133 Restart. A manually initiated start-up.

3.3.134 Retort. A trough or channel in an underfeed stoker, extending within the furnace, through which fuel is forced upward into the fuel bed.

Copyright 2014 National Fire Protection Association (NFPA). Licensed, by agreement, for individual use and download on October 4, 2014 to LEADER and READER for designated user PATTARAPORN SRITRAKOOL. No other reproduction or transmission in any form permitted without written permission of NFPA. For inquires or to report unauthorized use, contact licensing@nfpa.org.

3.3.135 Safety Shutdown Trip Relay. See 3.3.100, Master Fuel Trip Relay.

3.3.136 Scavenging. The procedure by which liquid fuel left in a burner or igniter after a shutdown is cleared by admitting steam or air through the burner passages, typically through a dedicated scavenging medium valve.

3.3.137 Selective Catalytic Reduction (SCR). A method of reducing NO_x in flue gas.

3.3.138 Semifluidized. In a fluidized bed boiler, the state in which a uniform flow of air that is less than that necessary to fluidize the bed is admitted and is found to be sufficient to adequately remove gaseous combustibles.

3.3.139 Service Connection. A point at which fuel, an atomizing medium, or power is connected to the firing equipment or controlled devices.

3.3.140 Set Point. A predetermined value to which a device or system is adjusted and at which it performs its intended function.

3.3.141 Shutdown.

3.3.141.1 ***Combustion Turbine Normal Shutdown.*** The normal sequence of events that automatically provides successful shutdown of the combustion turbine with no abnormal conditions.

3.3.141.2 ***Emergency Shutdown (HRSG or other combustion turbine exhaust systems).*** An event resulting in the rapid shutoff of all fuel to the combustion turbine along with a master fuel trip.

3.3.141.3 ***Normal Shutdown.*** Stopping burner operation by shutting off all fuel and ignition energy to the combustion equipment.

3.3.141.4 ***Safety Shutdown (Single Burner Boiler).*** Stopping burner operation by shutting off all fuel and ignition energy to the furnace.

3.3.142 Side Air Admission. Admission of air to the underside of a grate from the sides of a chain or traveling grate stoker.

3.3.143 Soot Blower. A mechanical device for introducing steam, air, or water to clean heat-absorbing surfaces.

3.3.144 Sorbent. In a fluidized bed boiler, a constituent that reacts with and captures a pollutant or, more generally, a constituent that reacts with and captures another constituent.

3.3.145 Spent Bed Material. In a fluidized bed boiler, material removed from the bed generally comprising reacted sorbent, calcined limestone, ash, and solid, unburned combustibles. For some applications, the spent bed material might also contain some inert material, such as sand.

3.3.146 Stable Bed. In a fluidized bed boiler, a bed of granular material that maintains sustained combustion at a desired temperature.

3.3.147 Stable Flame. A flame envelope that retains its continuity throughout the maximum rate of change within the operating range of the boiler, burner, or HRSG.

3.3.148 Steam Generator. A pressure vessel in which water is converted to steam or steam is superheated, or in which any combination thereof takes place.

3.3.149 Steam Generator Capacity. The manufacturer's stated steam output rate over a period of time for which the steam generator is designed to operate.

3.3.150 Steam Generator Enclosure. The physical boundary for all steam generator pressure parts and the combustion process.

3.3.151 Stoker.

3.3.151.1 ***Chain Grate Stoker.*** A stoker that has a moving endless chain as a grate surface, onto which coal is fed directly from a hopper.

3.3.151.2 ***Dump Grate Stoker.*** A stoker equipped with movable ash trays, or grates, by means of which the ash is discharged at any desirable interval.

3.3.151.3 ***Forced Draft Stoker.*** A stoker in which the flow of air through the grate is caused by a pressure produced by mechanical means.

3.3.151.4 ***Front Discharge Stoker.*** A stoker so arranged that refuse is discharged from the grate surface at the same end as the coal feed.

3.3.151.5 ***Mechanical Stoker.*** A device consisting of a mechanically operated fuel feeding mechanism and a grate, used for the purpose of feeding solid fuel into a furnace, distributing it over a grate, admitting air to the fuel for the purpose of combustion, and providing a means for removal or discharge of refuse.

3.3.151.6 ***Multiple Retort Stoker.*** An underfeed stoker consisting of two or more retorts, parallel and adjacent to each other, but separated by a line of tuyeres, and arranged so that the refuse is discharged at the ends of the retorts.

3.3.151.7 ***Overfeed Stoker.*** A stoker in which fuel is fed onto grates above the point of air admission to the fuel bed. Overfeed stoker grates include the following: (1) *Front Feed, Inclined Grate* — fuel is fed from the front onto a grate inclined downward toward the rear of the stoker; (2) *Chain or Traveling Grate* — a moving endless grate that conveys fuel into and through the furnace where it is burned, after which it discharges the refuse; (3) *Vibrating Grate* — an inclined vibrating grate in which fuel is conveyed into and through the furnace where it is burned, after which it discharges the refuse.

3.3.151.8 ***Rear Discharge Stoker.*** A stoker so arranged that ash is discharged from the grate surface at the end opposite the solid fuel.

3.3.151.9 ***Reciprocating Grate Stoker.*** A grate element that has reciprocating motion, usually for the purpose of fuel agitation or ash removal.

3.3.151.10 ***Side Dump Stoker.*** A stoker so arranged that refuse is discharged from a dump plate at the side of the stoker.

3.3.151.11 ***Single Retort Stoker.*** An underfeed stoker using one retort only in the assembly of a complete stoker.

3.3.151.12 ***Spreader Stoker.*** A stoker that distributes fuel into the furnace from a location above the fuel bed with a portion of the fuel burned in suspension and a portion on the grates. Spreader stoker grates include the following: (1) *Stationary Grate* — a grate in which fuel is fed onto a fixed position grate; (2) *Dump Grate* — a grate in which fuel is fed onto a nonmoving grate that is arranged to allow intermittent discharge of refuse through tilting action of

Copyright 2014 National Fire Protection Association (NFPA). Licensed, by agreement, for individual use and download on October 4, 2014 to LEADER and READER for designated user PATTARAPORN SRITRAKOOL. No other reproduction or transmission in any form permitted without written permission of NFPA. For inquires or to report unauthorized use, contact licensing@nfpa.org.

the grate bars; and (3) *Continuous Discharge or Traveling Grate* — a grate that continuously discharges the refuse from the end after burning the fuel.

3.3.151.13 ***Traveling Grate Stoker.*** A stoker similar to a chain grate stoker with the exception that the grate is separate from but is supported on and driven by chains.

3.3.151.14 ***Underfeed Stoker.*** A stoker in which fuel is introduced through retorts at a level below the location of air admission to the fuel bed. Underfeed stokers are divided into three general classes.

3.3.151.14.1 ***Continuous Ash Discharge Underfeed Stoker.*** A stoker in which the refuse is discharged continuously from the normally stationary stoker ash tray to the ash pit, without the use of mechanical means other than the normal action of the coal feeding and agitating mechanism.

3.3.151.14.2 ***Rear Discharge Underfeed Stoker.*** A stoker having a grate composed of transversely spaced underfeed retorts that feed and distribute solid fuel to intermediate rows of tuyeres through which air is admitted for combustion. The ash is discharged from the stoker across the rear end.

3.3.151.14.3 ***Side Ash Discharge Underfeed Stoker.*** A stoker having one or more retorts that feed and distribute fuel onto side tuyeres or a grate through which air is admitted for combustion and over which the ash is discharged at the side parallel to the retorts.

3.3.151.15 ***Water Cooled Stoker.*** A stoker having tubes in or near the grate surface through which water is passed for cooling the grates.

3.3.152 Stoker Gate. An element of a stoker placed at the point of entrance of fuel into the furnace and by means of which the depth of fuel on the stoker grate is controlled. It is generally used in connection with chain or traveling grate stokers and has the form of a guillotine.

3.3.153 Sulfation. The exothermic chemical reaction that takes place when calcium oxide unites with oxygen and sulfur dioxide to form calcium sulfate.

3.3.154 Sulfur Capture. The molar fraction of sulfur in the fuel input that is "captured" by calcium oxide to form calcium sulfate.

3.3.155 Sulfur Reacted. In a fluidized bed, the fraction of the total sulfur in the fuel fed to the bed that is converted to sulfur dioxide or calcium sulfate.

3.3.156 Sulfur Retention. The molar ratio of the total sulfur in the fuel minus the sulfur leaving the unit as sulfur dioxide to the total sulfur in the fuel.

3.3.157 Supervise. To sense and indicate a condition requiring attention and to automatically initiate corrective action.

3.3.158 Supplementary Firing. The provision of duct burners in a HRSG to increase the temperature of the combustion turbine exhaust gases.

3.3.159 Switch. Any set of contacts that interrupts or controls current flow through an electrical circuit.

3.3.159.1 ***Normal Shutdown, High Steam Pressure Switch.*** A pressure-actuated device that is arranged to effect a normal burner shutdown when the steam pressure exceeds a preset pressure.

3.3.159.2 ***Normal Shutdown, High Water Temperature Switch.*** A temperature-actuated device that is arranged to effect a normal burner shutdown when the water temperature exceeds a preset temperature.

3.3.159.3 ***Process Monitoring, High Oil Temperature Switch.*** A temperature-actuated device that initiates a signal when oil temperature rises above the limits that are required to maintain the viscosity range recommended by the burner manufacturer.

3.3.159.4 ***Process Monitoring, Low Oil Temperature Switch.*** A temperature-actuated device that initiates a signal when the oil temperature falls below the limits that are required to maintain the viscosity range recommended by the burner manufacturer.

3.3.159.5 ***Proof of Closure Switch.*** A device that provides feedback that a piece of equipment is in the closed position.

3.3.159.6 ***Safety Shutdown, Excessive Steam Pressure Switch.*** A pressure-actuated device that is arranged to effect a safety shutdown of the burner when the steam pressure exceeds a preset pressure.

3.3.159.7 ***Safety Shutdown, Excessive Water Temperature Switch.*** A temperature-actuated device that is arranged to effect a safety shutdown of the burner when the water temperature exceeds a preset temperature.

3.3.159.8 ***Safety Shutdown, High Gas Pressure Switch.*** A pressure-actuated device that is arranged to effect a safety shutdown or to prevent starting when the gas pressure exceeds the preset value.

3.3.159.9 ***Safety Shutdown, Low Gas Pressure Switch.*** A pressure-actuated device that is arranged to effect a safety shutdown or to prevent starting when the gas pressure falls below the preset value.

3.3.159.10 ***Safety Shutdown, Low Oil Pressure Switch.*** A pressure-actuated device that is arranged to effect a safety shutdown or to prevent starting when the oil pressure falls below the preset value.

3.3.159.11 ***Safety Shutdown, Low Water Cutout Auxiliary Switch.*** On single burner boilers, a device that is arranged to effect a safety shutdown of the burner when the water level in the boiler falls to a predetermined low level.

3.3.159.12 ***Safety Shutdown, Low Water Cutout Switch.*** A device that is arranged to effect a safety shutdown or master fuel trip when the water level in the boiler or HRSG falls to a predetermined low level.

3.3.160 Transmitter. Any device that converts process measurements from a sensor into a variable signal to be received by a display, control, or protective device.

3.3.161 Trial for Ignition Period (Igniter). The interval of time during light-off in which a safety control circuit permits the igniter fuel safety shutoff valve(s) to be opened before the flame detection system is required to supervise the igniter flame.

3.3.162 Trial for Ignition Period (Main Burner). The interval of time during light-off in which a safety control circuit permits the main burner fuel safety shutoff valve(s) to be opened before the flame detection system is required to supervise the main burner flame only.

3.3.163 Tuyeres. Forms of grates, located adjacent to a retort, feeders, or grate seals through which air is introduced.

Copyright 2014 National Fire Protection Association (NFPA). Licensed, by agreement, for individual use and download on October 4, 2014 to LEADER and READER for designated user PATTARAPORN SRITRAKOOL. No other reproduction or transmission in any form permitted without written permission of NFPA. For inquires or to report unauthorized use, contact licensing@nfpa.org.

3.3.164 Unattended Operation. A means of operation where the operator is not in view of operating instrumentation (local or remote) nor in a position to operate control systems.

3.3.165 Unit. The combined spaces of the furnace and the associated boiler passes, ducts, and fans that convey the gases of combustion to the stack; for HRSGs, the combined spaces of the combustion turbine, the HRSG, and the associated ducts that convey the air and combustion gases from the air intake to the stack; for other combustion turbine exhaust systems, the combined spaces of the combustion turbine, and the associated ducts that convey the air and combustion gases from the air intake to the stack.

3.3.166 Valve.

3.3.166.1 ***Barrier Valve.*** A valve, not necessarily dusttight, used to inhibit hot gases from traveling back into any system component open for inspection or maintenance.

3.3.166.2 ***Burner Shutoff Valve.*** In a pulverized fuel system, a valve that is installed in the fuel line between the pulverizer and the burner.

3.3.166.3 ***Charging Valve.*** In a gaseous or liquid fuel system, a small valve bypassing the main safety shutoff valve used for purging and charging the fuel headers and piping and for testing for leaks.

3.3.166.4 ***Check Valve.*** A valve that allows flow in one direction only. [**13D,** 2010]

3.3.166.5 ***Dusttight Valve.*** In a pulverized fuel system, a tight-seating valve installed in the fuel supply pipe to the burner to allow or stop flow.

3.3.166.6 ***Flow Control Valve.*** A valve capable of regulating quantity of throughput to a controlled range.

3.3.166.7 ***Safety Shutoff Valve (Safety Trip Valve).*** A fast-closing valve that automatically shuts off the gaseous or liquid fuel supply in response to a normal, emergency, or safety shutdown signal.

3.3.166.8 ***Supervisory Shutoff Valve.*** In a gaseous or liquid fuel system, a manually operated shutoff valve with a means to provide a "valve closed" position signal.

3.3.166.9 ***Vent Control Valve.*** A controllable valve for regulating the flow of vented air or gas from the system.

3.3.166.10 ***Vent Valve.*** A valve used to allow venting of air or gas from the system to the atmosphere.

3.3.167 Valve-Proving System. In a gaseous or liquid fuel system, a system that proves the leak tightness of all safety shutoff valves and prevents main burner or igniter light-off if the test is not satisfied.

3.3.168 Volatile Matter. The portion of mass, except water vapor, that is driven off in a gaseous form when solid fuels are heated.

3.3.169 Watch-Dog Timer. A timer external to a microprocessor-based control that is used to compare the microprocessor cycle timing against itself and that fails safely if the microprocessor timing stops or exceeds the watch-dog time interval.

Chapter 4 Fundamentals

4.1* Manufacture, Design, and Engineering.

4.1.1 The owner or the owner's representative shall, in cooperation with the manufacturer, ensure that the unit is not deficient in apparatus that is necessary for operation with respect to pressure parts, fuel-burning equipment, air and fuel metering, light-off, and maintenance of stable flame.

4.1.2 All fuel systems shall include provisions to prevent foreign substances from interfering with the fuel supply.

4.1.3* An evaluation shall be made to determine the optimum integration of manual and automatic safety features.

4.1.4 Although this code requires a minimum degree of automation, more complex plants, plants with increased automation, and plants designed for remote operation shall require additional provisions for the following:

(1) Information regarding significant operating events that allow the operator to make a rapid evaluation of the operating situation
(2) Continuous and usable displays of variables that allow the operator to avoid hazardous conditions
(3) In-service maintenance and checking of system functions without impairment of the reliability of the overall control system
(4) An environment conducive to timely and correct decisions and actions

4.1.5* The burner or fuel feed piping and equipment shall be designed and constructed to prevent the formation of hazardous concentrations of combustible gases that exist under normal operating conditions.

4.2 Installation and Commissioning.

4.2.1 The boiler, heat recovery steam generator (HRSG), combustion turbine exhaust system, or pulverized fuel system shall not be released for operation before the installation and checkout of the required safeguards and instrumentation system have been successfully completed.

4.2.2 The party responsible for the erection and installation of the equipment shall ensure that all pertinent apparatus is installed and connected in accordance with the system design.

4.2.3 The owner or owner's representative, the engineering consultant, the equipment manufacturer, and the operating company shall prohibit operation until the safeguards have been tested for correct operation as a system.

4.2.3.1 If temporary interlocks and instrumentation are necessary to meet these requirements, any such temporary system shall be reviewed by the purchaser, the engineering consultant, the equipment manufacturer, and the operating company, and agreement shall be reached on the system's ability to protect equipment and personnel in advance of start-up.

4.2.3.2 All temporary modifications shall be documented, and permanent resolutions shall be accomplished prior to commercial operation.

4.2.4 The safety interlock system and protective devices shall be tested jointly by the organization responsible for the system design and by those who operate and maintain such a system and devices.

Copyright 2014 National Fire Protection Association (NFPA). Licensed, by agreement, for individual use and download on October 4, 2014 to LEADER and READER for designated user PATTARAPORN SRITRAKOOL. No other reproduction or transmission in any form permitted without written permission of NFPA. For inquires or to report unauthorized use, contact licensing@nfpa.org.

4.2.5 After installation but before initial operation, coordinated tests of all systems shall be accomplished.

4.2.6 Documentation of the plant equipment, the system, and maintenance activities shall be updated to reflect changes in the status of equipment and operating procedures.

4.3 Coordination of Design, Construction, and Operation.

4.3.1* During the planning and engineering phases of plant construction, the design shall be coordinated with operating personnel.

4.3.2* The integration of the various components, including boiler or HRSG, burner, fuel and air supply equipment, controls, interlocks and safety devices, operator and maintenance functions, and communication and training, shall be the responsibility of the owner and the operating company.

4.4* Maintenance, Inspection, Training, and Safety.

4.4.1 Maintenance and Equipment Inspection. See also Annex J.

4.4.1.1* A program shall be provided for inspection and maintenance of equipment at intervals consistent with the type of equipment used, service requirements, and manufacturers' recommendations.

4.4.1.2 As a minimum, the maintenance program shall include the following:

(1) In-service inspections to identify conditions that need corrective action
(2) Well-defined planning for making repairs or modifications using qualified personnel and tools and instruments designed for the work
(3) Equipment history and record of dates of service, conditions found, maintenance performed, and changes made
(4) Written comprehensive maintenance procedures incorporating the manufacturer's instructions to define the tasks and skills required
(5) Nondestructive examination requirements; tasks needing special tools; special environmental factors such as temperature limitations, dusts, contaminated or oxygen-deficient atmospheres, and limited access or confined space restrictions
(6) Equipment condition assessment before and after maintenance
(7) Supply of well-maintained spare parts to perform required maintenance
(8) Housekeeping essential for safe operation and prevention of fires or explosions that includes the following:
    (a) Provisions for cleaning of horizontal ledges or surfaces of buildings and equipment to prevent the accumulation of dust deposits greater than the minimum required to create an explosion hazard
    (b) Water washing or vacuum cleaning methods to reduce the possibility of creating dust clouds
    (c) Prohibition of the use of compressed air for cleaning

4.4.1.3* Operation, set points, and adjustments shall be verified by testing at specified intervals, and the results shall be documented.

4.4.1.4 Defects shall be reported and corrected, and the changes or repairs documented.

4.4.1.5 System configuration, including logic, set points, and sensing hardware, shall not be changed without detailed engineering review and documentation.

4.4.1.6 System operation shall be tested and verified for compliance with the design criteria whenever a controller is replaced, repaired, reprogrammed, or updated before returning it to service.

4.4.1.7 When a unit that fires liquid fuel is out of service and available for inspection, personnel shall check for any accumulation of unburned fuel in the boiler or HRSG enclosure, especially in the fin-tube area of a HRSG.

4.4.2 Training.

4.4.2.1 Operator Training.

4.4.2.1.1* The owner or the owner's representative shall be responsible for establishing a formal training program that is consistent with the type of equipment and hazards involved to prepare personnel to operate equipment.

4.4.2.1.2 Operating procedures shall be established that cover normal and emergency conditions.

4.4.2.1.2.1 Start-up, shutdown, and lockout procedures shall all be covered in detail.

4.4.2.1.2.2 Where different modes of operation are possible, procedures shall be prepared for each operating mode.

4.4.2.1.2.3 Procedures also shall be prepared for switching from one mode to another.

4.4.2.1.3 The owner or owner's representative shall verify that operators are trained and competent to operate the equipment under all conditions prior to their operation of such equipment.

4.4.2.1.4 The owner or owner's representative shall be responsible for retraining operators, including reviewing their competence, at intervals determined by the owner.

4.4.2.1.5 The training program and operating and maintenance manuals shall be kept current with changes in equipment and operating procedures and shall be available for reference and use at all times.

4.4.2.1.6 Operating procedures shall be directly applicable to the equipment involved and shall be consistent with safety requirements and the manufacturer's recommendations.

4.4.2.2 Maintenance Training.

4.4.2.2.1* The owner or owner's representative shall be responsible for establishing a formal and ongoing program, consistent with the equipment and hazards involved, for training maintenance personnel to perform all required maintenance tasks.

4.4.2.2.2 Maintenance procedures and their associated training programs shall be established to cover routine and special techniques.

4.4.2.2.3 Environmental factors such as temperature, dusts, contaminated or oxygen-deficient atmospheres, internal pressures, and limited access or confined space requirements shall be included in the maintenance procedures.

4.4.2.2.4 Maintenance procedures shall be consistent with safety requirements and the manufacturer's recommendations and shall be kept current with changes in equipment and personnel.

4.5 Basic Operating Requirements.

4.5.1 Operating procedures with a minimum number of manual operations shall be established.

Copyright 2014 National Fire Protection Association (NFPA). Licensed, by agreement, for individual use and download on October 4, 2014 to LEADER and READER for designated user PATTARAPORN SRITRAKOOL. No other reproduction or transmission in any form permitted without written permission of NFPA. For inquires or to report unauthorized use, contact licensing@nfpa.org.

4.5.2 Standard operating procedures that result in well-defined and controlled operations shall be established.

4.5.3 Interlocks shall be provided to ensure correct operating sequences and to interrupt sequences when conditions are not correct for continuation.

4.5.4 No interlocks shall be bypassed during start-up or operation of the unit unless the bypass is tagged and is governed by operating procedures.

4.5.5 Purge and start-up procedures with necessary interlocks shall be established.

4.5.6 Written operating procedures and detailed checklists for operator guidance shall be provided for achieving all automatic and manual operating functions.

4.6* Structural Design. The furnace shall be capable of withstanding transient design pressures and normal operating pressures without permanent deformation due to yield or buckling of any support member. Transient pressures to be considered shall include, but shall not necessarily be limited to, misoperation of fans or dampers and a master fuel trip while operating at maximum design load. *(Refer to individual chapters for additional guidance.)*

4.7 Functional Requirements of Fuel-Burning System. See also Annex K.

4.7.1 Function. The fuel-burning system shall function to convert continuously any ignitible input into unreactive products of combustion at the same rate that the fuel(s) and air reactants enter the combustion chamber.

4.7.2 Compatibility. The fuel-burning system shall be sized to meet the operating requirements of the unit, shall be compatible with other component systems, and shall be capable of being controlled for the full operating range of the unit.

4.7.3 System Requirements.

4.7.3.1* The fuel-burning system shall provide means for start-up, operation, and shutdown of the combustion process, including openings and configurations in the component assemblies to allow observation, measurement, and control of the combustion process.

4.7.3.2 The fuel-burning system shall consist of the boiler or HRSG enclosure and the following subsystems, as applicable: air supplies, fuel supplies, main fuel burning, ignition, and combustion products removal and re-injection. Each shall be sized and interconnected to meet the requirements of 4.7.4 through 4.7.8.

4.7.4 Enclosures. The boiler enclosure or HRSG enclosure shall meet the requirements of 4.7.4.1 through 4.7.4.3.

4.7.4.1 The enclosure shall be sized and arranged with respect to the main fuel-burning subsystem so that stable flame is maintained.

4.7.4.2 The enclosure shall be free from "dead pockets" when prescribed purge procedures are followed.

4.7.4.3 Observation ports shall be provided to allow visual inspection of the combustion chamber, igniter and burner flames (including the ignition zone), overfire air ports, reburn injectors, and stoker grates.

4.7.5 Air Supply Subsystem. The air supply subsystem shall meet the requirements of 4.7.5.1 through 4.7.5.4.

4.7.5.1 The air supply equipment shall be sized and arranged to ensure a continuous airflow for all operating conditions on the unit.

4.7.5.2* The arrangement of air inlets, ductwork, and air preheaters shall be designed to minimize contamination of the air supply by flue gas, water, fuel(s), and other materials as a result of either intentional or accidental discharges.

4.7.5.3 Drain and access openings shall be provided and shall be accessible.

4.7.5.4 The air supply equipment shall be capable of continuing the required airflow during anticipated combustion chamber pressure pulsations.

4.7.6 Fuel Supply Subsystem. Fuel supplies and main fuel-burning subsystems shall meet the applicable requirements in Chapters 5 through 10 for specific systems.

4.7.7* Ignition Subsystem. The ignition subsystem shall meet the requirements of 4.7.7.1 through 4.7.7.13.

4.7.7.1 The ignition subsystem shall be sized and arranged to ignite the main burner input within the limitation of the igniter classification as follows:

(1) It shall be verified through testing that the igniters furnished meet the requirements of the class specified in the design.
(2) Igniters shall be designated as Class 1, Class 2, or Class 3 as defined in 3.3.85.1, 3.3.85.2, and 3.3.85.3 and as verified by test.

4.7.7.2 Class 1 igniters shall be permitted to be used as Class 2 or Class 3 igniters. Class 2 igniters shall be permitted to be used as Class 3 igniters.

4.7.7.3 Where Class 2 igniters are used, the burner shall be operated under controlled conditions to limit the potential for abnormal operation, as well as to limit the charge of fuel in the event that ignition does not occur during light-off.

4.7.7.4 Class 2 igniters shall not be used to ignite the main fuel under uncontrolled or abnormal conditions.

4.7.7.5 Where Class 3 igniters are used, the igniter shall be turned off as a part of the burner light-off procedure when the time trial for ignition of the main burner has expired, to ensure that the main flame is not dependent on ignition support from the igniter.

4.7.7.6 Class 2 igniters shall not be used to extend the turndown range but shall be permitted to be used to support ignition under low-load or adverse operating conditions.

4.7.7.7 Class 3 igniters shall not be used to support ignition or to extend the burner turndown range.

4.7.7.8 Except for periods when the main burner is being scavenged, Class 3 special igniters shall not be used unless supervision of the individual main burner flame is provided.

4.7.7.9* Where Class 1 and Class 2 igniters are used, the tests described in 6.6.3.2.2, 6.7.3.2.2, and 6.8.3.2.2 shall also be performed with the ignition subsystem in service to verify that the igniters furnished meet the requirements of the class specified in the design.

4.7.7.10 Tests shall be performed to determine transient limits in the ignition air and fuel supplies or in the main air and fuel supplies that do not extinguish the igniter flame or

Copyright 2014 National Fire Protection Association (NFPA). Licensed, by agreement, for individual use and download on October 4, 2014 to LEADER and READER for designated user PATTARAPORN SRITRAKOOL. No other reproduction or transmission in any form permitted without written permission of NFPA. For inquires or to report unauthorized use, contact licensing@nfpa.org.

reduce the igniter's ability to perform its intended function or adversely affect other burners and igniters in operation.

4.7.7.11 Igniters shall be permanently installed under the following conditions:

(1) They shall be supervised to verify that the requirements of 4.7.7.1 and 4.7.7.2 are met.
(2) This supervision shall include igniter capacity and individual igniter flame monitoring.
(3) The capacity shall be measured by igniter header pressure as a minimum.
(4) On single burner boilers, igniters shall not require supervision of igniter capacity.

4.7.7.12 The ignition equipment shall be located in an environment free of excessive heat and accessible for maintenance.

4.7.7.13 All igniter safety shutoff valves shall be located to minimize the volume of fuel that is downstream of the valve in the individual igniter fuel lines or that could flow by gravity into the combustion chamber after an emergency shutdown or a burner shutdown.

4.7.8 Combustion Products Removal Subsystem. The combustion products removal subsystem shall meet the requirements of 4.7.8.1 through 4.7.8.5.

4.7.8.1 The flue gas ducts, fans, and stack shall be sized and arranged to remove the products of combustion at the same rate at which they are generated by the fuel-burning process during operation of the unit.

4.7.8.2 Drain and access openings shall be provided and shall be accessible.

4.7.8.3 The flue gas ducts shall be designed so that they do not contribute to combustion chamber pulsations.

4.7.8.4* Components common to more than one boiler or HRSG shall not limit the rate of removal of products of combustion generated during the operation of all boilers or HRSGs.

4.7.8.5 Boilers that share a common component between the furnace outlet and the stack shall have provisions to bypass the common component for unit purge when the common component contains a possible ignition source.

4.8 Multiple Boilers.

4.8.1 Where multiple boilers are supplied from the same fuel supply source, there shall be a means of manual isolation for each boiler.

4.8.2 Dedicated safety shutoff valving, with related alarm, interlock, and control instrumentation, shall be provided for each boiler.

4.9 Gaseous Vent System Requirements.

4.9.1* The discharge from atmospheric vents shall be located so that there is no possibility of the discharged gas being drawn into a combustion air intake, the ventilating system, or the windows of the boiler or HRSG room or adjacent buildings and shall be extended above the boiler or HRSG and adjacent structures so that gaseous discharge does not present a hazard.

4.9.2 Vent line sizes and vent valve port diameters shall not be less than the values shown in Table 4.9.2.

4.9.3 Manifolding of Vents.

4.9.3.1 Vents from systems operating at different pressure levels shall not be manifolded together.

4.9.3.2 Vents from systems served from different pressure-reducing stations shall not be manifolded together.

4.9.3.3 Vents from different boilers or HRSGs shall not be manifolded together.

4.9.3.4 Vents from systems using different fuel sources shall not be manifolded together.

4.9.3.5 Header vents shall be permitted to be manifolded together only with other header vents and only when operated and tripped in parallel.

4.9.3.6 Burner vents shall be permitted to be manifolded together only with other burner vents.

4.9.3.7 Igniter vents shall be permitted to be manifolded together only with other igniter vents.

4.9.3.8 Lance vents shall be permitted to be manifolded together only with other lance vents.

Table 4.9.2 Vent Sizes

Fuel Line Size		Minimum Vent Line Size	
DN (mm)	**NPS (in.)**	**DN (mm)**	**NPS (in.)**
≤40	≤1½	20	¾
50	2	25	1
65 to 80	2½ to 3	32	1¼
90	3½	40	1½
100 to 125	4 to 5	50	2
150	6	65	2½
175	7	80	3
200	8	90	3½
>200	>8	Vent internal cross-sectional area ≥15% of the fuel line internal cross-sectional area	

Copyright 2014 National Fire Protection Association (NFPA). Licensed, by agreement, for individual use and download on October 4, 2014 to LEADER and READER for designated user PATTARAPORN SRITRAKOOL. No other reproduction or transmission in any form permitted without written permission of NFPA. For inquires or to report unauthorized use, contact licensing@nfpa.org.

4.9.4 The cross-sectional area of the manifold line shall not be less than the greater of the following:

(1) The cross-sectional area of the largest vent plus 50 percent of the sum of the cross-sectional areas of the additional vent lines
(2) The sum of the cross-sectional areas of the two largest vent lines

4.10 Fuel System Piping.

4.10.1 Fuel Gas Piping Systems. Fuel gas piping material and system design shall be in accordance with NFPA 54, *National Fuel Gas Code* (for fuel gas piping inside industrial and institutional buildings), ASME B31.1, *Power Piping* (for fuel gas piping in power applications), or ASME B31.3, *Process Piping* (for fuel gas piping in process applications).

4.10.2 Fuel Oil Piping Systems. Fuel oil piping materials and system design shall be in accordance with NFPA 31, *Standard for the Installation of Oil-Burning Equipment* (for fuel oil piping inside industrial or institutional buildings), ASME B31.1, *Power Piping* (for fuel oil piping in power applications), or ASME B31.3, *Process Piping* (for fuel oil piping in process applications).

4.10.3* Flue Gas Path Auxiliary Systems — Fuel and Feedstock Piping. Positive means to prevent leakage of fuel or feedstock into an idle furnace or flue gas path shall be provided.

4.10.3.1 For gaseous fuels or feedstocks, provisions shall include a double block and vent valve arrangement on the fuel or feedstock supply, separate from any other double block and vent valve arrangements for other systems.

4.10.3.2 For gaseous fuels or feedstocks, a double block and vent valve arrangement shall be provided in the fuel or feedstock line associated with each flue gas path injection point.

4.10.3.3 For liquid or blown-in powder fuels or feedstocks, provisions shall include a double block valve arrangement on the fuel or feedstock supply, separate from any other double block valve arrangements for other systems.

4.11* Burner Management System Logic.

4.11.1* As a minimum, the requirements of 4.11.2 through 4.11.10 shall be included in the design to ensure that a logic system for burner management meets the intent of those requirements.

4.11.2 The logic system for burner management shall be designed specifically so that a single failure in that system does not prevent an appropriate shutdown.

4.11.3 The burner management system interlock and alarm functions shall be initiated by one or more of the following:

(1) One or more switches or transmitters that are dedicated to the burner management system
(2) One or both signals from two transmitters exceeding a preset value
(3) The median signal from three transmitters exceeding a preset value

4.11.3.1 When signals from multiple switches or transmitters are provided to initiate interlock or alarm functions, those signals shall be monitored in comparison to each other by divergence or other fault diagnostic alarms.

4.11.3.2 When signals from multiple switches or transmitters are provided to initiate interlock or alarm functions, the provided signals shall be generated by individual sensing devices connected to separate process taps.

4.11.4* Alarms shall be generated to indicate equipment malfunction, hazardous conditions, and misoperation.

4.11.5 The burner management system designer shall evaluate the failure modes of components, and as a minimum the following failures shall be evaluated and addressed:

(1) Interruptions, excursions, dips, recoveries, transients, and partial losses of power
(2) Memory corruption and losses
(3) Information transfer corruption and losses
(4) Inputs and outputs (fail-on, fail-off)
(5) Signals that are unreadable or not being read
(6) Failure to address errors
(7) Processor faults
(8) Relay coil failure
(9) Relay contact failure (fail-on, fail-off)
(10) Timer failure

4.11.6* The design of the logic system for burner management shall include and accommodate the following requirements:

(1) Diagnostics shall be included in the design to monitor processor logic function.
(2) Logic system failure shall not preclude proper operator intervention.
(3) Logic shall be protected from unauthorized changes.
(4) Logic shall not be changed while the associated equipment is in operation.
(5) System response time (through-put) shall be short to prevent negative effects on the application.
(6) Protection from the effects of noise shall prevent false operation.
(7) No single component failure within the logic system shall prevent a mandatory master fuel trip.
(8) The operator shall be provided with a dedicated manual switch(es) that shall actuate the master fuel trip relay independently and directly.
(9) At least one manual switch referenced in 4.11.6(8) shall be identified and located remotely where it can be reached in case of emergency.
(10)*The logic system shall be monitored for failure.
(11) Failure of the logic system shall require a fuel trip for all equipment supervised by the failed logic system.
(12) Logic shall be maintained either in nonvolatile storage or in other memory that retains information on the loss of system power.

4.11.7* Requirement for Independence.

4.11.7.1 Except as noted in 4.11.7.2, the burner management system shall be provided with independent logic, independent logic solving hardware, independent input/output systems, and independent power supplies and shall be a device functionally and physically separate from other logic systems.

4.11.7.2 For single burner boilers, the boiler control system shall be permitted to be combined with the burner management system under one of the following conditions:

(1)*If the fuel-air ratio is controlled externally from the boiler control system
(2) If the combined boiler control and burner management system is specifically listed or labeled for the application

Copyright 2014 National Fire Protection Association (NFPA). Licensed, by agreement, for individual use and download on October 4, 2014 to LEADER and READER for designated user PATTARAPORN SRITRAKOOL. No other reproduction or transmission in any form permitted without written permission of NFPA. For inquires or to report unauthorized use, contact licensing@nfpa.org.

4.11.7.3 The burner management safety functions shall include but shall not be limited to purge interlocks and timing, mandatory safety shutdowns, trial timing for ignition, and flame monitoring.

4.11.7.4 The logic system shall be limited to one boiler or HRSG.

4.11.7.5 The same hardware type used for burner management systems shall be permitted to be used for other logic systems.

4.11.7.6 Network communications between the burner management system and other systems shall be permitted. The network communicating with other systems shall not be the same network that the burner management system uses to communicate with its input/output hardware.

4.11.7.7* Signals and the manually operated devices specified in 4.11.6(8) that initiate mandatory master fuel trips shall be hardwired.

4.11.8 Momentary Closing of Fuel Valves.

4.11.8.1 Logic sequences or devices intended to cause a safety shutdown, once initiated, shall cause a burner or master fuel trip, as applicable, and shall require operator action prior to resuming operation of the affected burner(s).

4.11.8.2 No logic sequence or device shall be permitted that allows momentary closing and subsequent inadvertent reopening of the main or ignition fuel valves.

4.11.9 Circuit Devices. No momentary contact or automatic resetting device, control, or switch that can cause chattering or cycling of the safety shutoff valves shall be installed in the wiring between the load side (terminal) of the primary or programming control and the main or ignition fuel valves.

4.11.10 Documentation. Documentation shall be provided to the owner and the operator indicating that all safety devices and logic meet the requirements of the application.

4.12 Flame Monitoring and Tripping Systems. Additional requirements concerning flame detection associated with each type of steam generator covered by this code are given in the respective chapters.

4.12.1 Functional Requirements. The basic requirements of any flame monitoring and tripping system shall be as follows:

(1) Combustion instability situations shall be brought to the attention of the operator for remedial action.
(2) An emergency shutdown of the involved equipment shall be automatically initiated upon detection of serious combustion problems that will lead to the accumulation of unburned fuel.

4.12.2 System Objectives.

4.12.2.1 System objectives shall be developed that include those requirements that are specifically related to the combustion conditions typical for particular combustion chamber configurations, burner or firing systems, and fuel characteristics.

4.12.2.2 Such objectives shall be consistent with the individual manufacturer's design philosophy.

4.12.3 Flame Detection.

4.12.3.1 Flame Detector Sighting.

4.12.3.1.1 Flame detector sighting shall be a factor in the initial design.

4.12.3.1.2 Field tests shall be required to establish optimum sighting angles of burners or nozzles and to check the effective angular range of flame detectors in relation to burners or nozzles.

4.12.3.2 Clean Air Supply. Clean air, where necessary, shall be supplied to minimize problems with dirty detector lenses.

4.12.3.3 Self-Checking of Flame Detectors. Where flame-sensing detectors can fail in the flame-proven mode, self-checking features shall be provided to ensure that the failure of any single component cannot result in a false indication of flame.

4.12.3.4* Reduced Emissions Control Effects.

4.12.3.4.1 Flame detector selection, sighting, and location shall be re-evaluated in accordance with 4.12.2 following implementation of methods or installation of equipment to reduce the emission of air pollutants.

4.12.3.4.2 When changes made to reduce the emission of air pollutants affect flame characteristics, main burners shall be tested for the limits of stable flame.

4.12.3.5 Flame Proving.

4.12.3.5.1 A flame detector shall not use any mechanical, electrical, or electronic means to force the flame detector into a "flame not detected" mode as part of the igniter and/or burner starting sequence.

4.12.3.5.2 A flame detector shall prove ignition of the associated fuel by proving both igniter "flame not detected" and burner "flame not detected" prior to introduction of the fuel to the igniter or burner and proving "flame detected" after introduction of that fuel to that igniter or burner.

4.12.3.5.3 An igniter flame detector shall not be required to prove "flame not detected" if the associated burner is proven in service and the associated igniter is out of service.

4.12.3.5.4 A burner flame detector shall not be required to prove "flame not detected" if an associated Class 1 igniter is proven in service.

4.12.3.5.5 The igniter flame detector(s) and/or the burner flame detector(s) shall not be required to prove "flame not detected" after the boiler load has been elevated to the point that it is no longer possible to achieve individual flame discrimination.

4.12.3.5.6 The boiler load specified in 4.12.3.5.5 shall be proven by test to be the load level at which individual igniters and/or burner flame discrimination is no longer possible, but in no case shall the boiler load be less than that for which tests show that complete combustion will occur.

4.13* Combustion Control System.

4.13.1 Functional Requirements.

4.13.1.1 The combustion control system shall regulate the inputs into the combustion chamber to ensure continuous combustion and stable flame under all operating conditions.

4.13.1.2 Draft control, where applicable, shall be coordinated with the combustion control system.

4.13.1.3* On multiple burner boilers, equipment shall be provided and procedures shall be established to maintain the air-fuel ratio within design limits at each burner.

Copyright 2014 National Fire Protection Association (NFPA). Licensed, by agreement, for individual use and download on October 4, 2014 to LEADER and READER for designated user PATTARAPORN SRITRAKOOL. No other reproduction or transmission in any form permitted without written permission of NFPA. For inquires or to report unauthorized use, contact licensing@nfpa.org.

4.13.1.3.1 The equipment and procedures shall not be required to be a part of the combustion control system.

4.13.1.4 Boiler or HRSG control systems shall be permitted to be combined for more than one boiler or HRSG where the control system is separated from the burner management system.

4.13.2 System Requirements.

4.13.2.1* Except as noted in 4.13.2.2, under no circumstances shall airflow demand be less than the minimum purge rate established by the designer.

4.13.2.2 For single burner boilers, airflow demand shall not be reduced below the low limit of the fuel-burning system as determined by the burner manufacturer and verified by operating test.

4.13.2.3 The fuel demand shall not increase the fuel input(s) above the available airflow.

4.13.2.4 Airflow demand shall not reduce airflow below that required by the actual fuel input(s).

4.13.2.5 The fuel demand shall not exceed the capability of the operating draft fans.

4.13.2.6 If the loss or shutdown of a draft fan causes the fuel demand to be greater than the capacity of the fans in service, the fuel(s) shall be rapidly reduced to a value that can be accommodated.

4.13.2.7 Measurements.

4.13.2.7.1 Measurements used in the combustion control system shall be accurate and reproducible to maintain stable firing conditions.

4.13.2.7.2 Pressure, temperature, density, and/or viscosity corrections shall be employed, as applicable, to meet the requirement of 4.13.2.7.1.

4.13.2.8 Where multiple fuels are fired, the fuel inputs shall be totalized on the basis of their relative heat values.

4.13.2.9 The total heat input to a given burner or combustion zone shall not exceed the maximum limits specified by the boiler or HRSG manufacturer.

4.13.2.10* Means shall be provided to enable the operator to adjust the air-fuel ratio for all boilers consistent with the fuel(s) being fired.

4.13.2.11 The equipment selection and the design of the combustion control system shall facilitate the on-line calibration, testing, and maintenance requirements described in 4.4.1.

4.13.2.12 The rate of increase of reburn fuel injection shall not exceed the response capability of the main combustion control system.

4.13.3 Additional Requirements.

4.13.3.1 Any logic commands from the burner management system shall take precedence over the combustion control system.

4.13.3.2 Where applicable, automatic control of airflow shall not be permitted unless the draft control is maintained in automatic control.

4.13.3.3* Automatic Control.

4.13.3.3.1 Except as noted in 4.13.3.3.2, automatic control of the fuel input(s) shall not be permitted unless the airflow is maintained in automatic control.

4.13.3.3.2 For HRSGs designed and operated in accordance with Chapter 8, automatic control of fuel inputs shall be permitted without automatic control of airflow.

4.13.3.4 The combustion control system shall neither automatically increase nor automatically decrease a fuel input beyond the fuel-burning system's operating range as determined by the manufacturer and verified by operating test.

4.13.3.5 The combustion control system shall not reduce the fuel feed to a pulverizer below the minimum feed rate established by the pulverizer manufacturer for the manufacturer's specified design fuel.

4.13.3.5.1 For fuels with ignition characteristics different from those of the manufacturer's design fuel, the combustion control system shall not reduce the fuel feed rate below the value that ensures stable and self-sustaining combustion at the burners served by the pulverizer.

4.13.3.5.2 The minimum feed rate for fuels not conforming to the fuel specifications used by the manufacturer in the design of the pulverizer system shall be determined by operational tests.

4.14 Power Supplies. Precautions shall be taken to ensure the availability of a failure-free power supply (electric or pneumatic) to all control and safety devices.

4.15 Operating Information.

4.15.1 Except as noted in 4.15.1.1, continuous trend display of steam flow, feed water flow rate, total fuel flow rate, and total airflow rate as a percentage of the maximum unit load, drum level, final steam temperature, main steam pressure, and furnace or combustion chamber draft shall be simultaneously available at the operating location.

4.15.1.1* For single burner boilers, continuous trend display of operating parameters critical to operation shall be provided.

4.15.2 Alarms and indicators shall be grouped operationally and shall be visible to the operator to allow access to operational devices.

4.15.3 All emergency alarm indicators, push buttons, and selector switches shall be visible to the operator, labeled clearly, and protected to avoid inadvertent actuation.

4.15.4 All control functions shall be grouped for accessibility and in proximity to their associated alarm and indication devices.

4.15.5* Where video display units (VDUs) are used, data shall be displayed on monitor screens in a logical, operational grouping to minimize the number of keystroke operations needed to respond to system upsets.

4.15.6 Where VDUs are used, alarm functions shall be prioritized to appear on the monitor screen upon being sensed, regardless of any information already displayed.

4.16* Selective Catalytic Reduction.

4.16.1 Where selective catalytic reduction (SCR) systems are selected for NO_x emission control, they shall be integrated

Copyright 2014 National Fire Protection Association (NFPA). Licensed, by agreement, for individual use and download on October 4, 2014 to LEADER and READER for designated user PATTARAPORN SRITRAKOOL. No other reproduction or transmission in any form permitted without written permission of NFPA. For inquires or to report unauthorized use, contact licensing@nfpa.org.

into the design of the boiler system, HRSG, or combustion turbine exhaust system to operate in the flue gas temperature range required.

4.16.2 Areas in which either anhydrous or aqueous ammonia is stored or piped shall be ventilated to preclude toxic or flammable concentrations.

4.16.3 Areas in which anhydrous ammonia is stored or piped shall meet the requirements of CGA G-2.1/ANSI K61.1, *Safety Requirements for the Storage and Handling of Anhydrous Ammonia.*

Chapter 5 Single Burner Boilers

5.1 Application.

5.1.1 This chapter shall be used in conjunction with Chapters 1 through 4 and requires the coordination of operation procedures, control systems, interlocks, and structural design.

5.1.2 Where conflicts exist, the requirements of Chapter 5 shall apply.

5.1.3 All safety shutoff valves, safety interlock devices, valve-proving systems, and flame detection systems shall be listed or approved. A safety shutoff valve proof of closure switch shall be an original design component of the valve or actuator assembly and shall activate only after the valve is fully closed.

5.2 Purpose. The purpose of this chapter shall be to establish minimum requirements for the design, installation, operation, and maintenance of single burner boilers, their fuel-burning systems, and related systems to contribute to safe operation and, in particular, to the prevention of furnace explosions.

5.3 Equipment Requirements.

5.3.1* Fuel Supply — Oil.

5.3.1.1 Fuel shall be stored, prepared, and delivered to the oil service connection under anticipated operating conditions in accordance with the applicable portions of NFPA 31, *Standard for the Installation of Oil-Burning Equipment.*

5.3.1.2 Operation of the burner shall not be attempted until a continuous fuel supply is ensured.

5.3.1.3 Fuel shall be delivered continuously to the combustion chamber in a finely atomized form that can be ignited readily and consumed.

5.3.1.4 All equipment that is associated with pumping, heating, and straining the fuel from storage to the service connection shall be designed, sized, and interconnected so as to provide a suitable fuel supply over a full range of conditions.

5.3.1.5 Relief valves shall be installed after the pump to prevent overpressure in the system.

5.3.1.6 Fuel being burned shall be delivered to the burner at the temperature and pressure specified by the burner manufacturer.

5.3.1.7 Where the fuel must be heated, the interlocks and instruments shall reflect the correct values of the variable being measured, particularly in dead-end lines, where heavy oil will tend to solidify.

5.3.1.8 Oil Supply.

5.3.1.8.1 The operation of a burner system that has the capability to burn heated and unheated oils shall include a procedure to ensure that the specified grade of oil, compatible with the selected mode of operation, is being supplied to the burner.

5.3.1.8.2 Precautions shall include the intended routing of recirculated oil.

5.3.1.9 Two safety shutoff valves in series, each with a proof of closure switch, shall be provided in the oil line to the main burner.

5.3.1.10 Where pressure can develop in excess of the valve or piping rated pressure(s), the piping design shall include a means to prevent or relieve excess pressure between the valves.

5.3.1.11 Oil piping materials and system design shall be in accordance with NFPA 31, *Standard for the Installation of Oil-Burning Equipment* (for oil piping inside industrial or institutional buildings), ASME B31.1, *Power Piping* (for oil piping in power applications), or ASME B31.3, *Process Piping* (for oil piping in process applications).

5.3.2* Fuel Supply — Gas.

5.3.2.1 The gas supply at the gas service connection shall be controlled at the pressure for which the fuel-burning system had been designed.

5.3.2.2 Gas piping shall be sized to maintain the desired constant pressure for maximum burner flow.

5.3.2.3* Two safety shutoff valves in series, each with a proof of closure switch, shall be provided in the fuel gas line to the main burner, and an automatic vent valve shall be provided between the two valves. When a listed automatic valve-proving system is used with two safety shutoff valves in series, each with a proof of closure switch, the automatic vent valve shall be permitted to be omitted.

5.3.2.3.1* Valve proving shall be performed either after every burner shutdown or prior to every burner light-off.

5.3.2.4 Foreign matter such as welding beads, chips, scale, dust, and debris shall be removed from the gas piping.

5.3.2.5 A drip leg shall be provided in the gas piping. *(See A.5.3.2.3 and A.5.3.4.1.)*

5.3.2.6 Gas piping material and system design shall be in accordance with NFPA 54, *National Fuel Gas Code* (for gas piping inside industrial and institutional buildings), ASME B31.1, *Power Piping* (for gas piping in power applications), or ASME B31.3, *Process Piping* (for gas piping in process applications).

5.3.2.7 Valve Leakage Test.

5.3.2.7.1 Permanent means shall be provided for making valve leakage tests of the main burner gas safety shutoff valves.

5.3.2.7.2 Valve leakage tests of the main safety shutoff valves shall be conducted at least annually.

5.3.3 Alternate Fuel Firing.

5.3.3.1 Manual Fuel Selection. Where oil and gas are to be burned alternately, a manual fuel selector switch shall be provided to permit operation of the necessary interlocks, fuel safety shutoff valves, and controls for the fuel to be fired.

Copyright 2014 National Fire Protection Association (NFPA). Licensed, by agreement, for individual use and download on October 4, 2014 to LEADER and READER for designated user PATTARAPORN SRITRAKOOL. No other reproduction or transmission in any form permitted without written permission of NFPA. For inquires or to report unauthorized use, contact licensing@nfpa.org.

5.3.3.2 Automatic Fuel Selection.

5.3.3.2.1 Where oil and gas are to be burned alternately, an automatic change from one fuel to the other shall be accomplished only after a shutdown.

5.3.3.2.2 Provisions for manual changeover of the system shall be provided in accordance with 5.3.3.1 and Section 5.7.

5.3.3.2.3 For simultaneous firing of oil and gas fuels, Section 5.6 shall apply.

5.3.4 Fuel-Burning Equipment.

5.3.4.1* Ignition.

5.3.4.1.1 The main burner shall be equipped with a permanently installed igniter.

5.3.4.1.1.1 Class 1 Igniter.

(A) Where a Class 1 igniter is used, the main burner flame shall be proven by a flame detector.

(B) Either the main flame or the igniter flame shall be proven.

5.3.4.1.1.2 Class 2 Igniter.

(A) Where a Class 2 igniter is used, it shall not be used to ignite main fuel under uncontrolled or abnormal conditions.

(B) The burner shall be operated under controlled conditions to limit the potential for abnormal operation as well as to limit the charge of fuel to the furnace in the event that ignition does not occur during light-off.

(C) If the Class 2 igniter is not shut down once the main flame sequence is successfully completed, then the main burner flame shall be proven by a flame scanner independently of the igniter.

5.3.4.1.1.3 Class 3 Igniter.

(A)* Where a Class 3 igniter is used, the igniter shall be shut down as part of the burner light-off procedure when the time trial for ignition of the main burner has expired.

(B) The use of such igniters to support ignition or to extend the burner control range shall be prohibited.

(C) The main flame shall be proven by a flame scanner.

5.3.4.1.1.4 Class 3 Special Igniter. Where a Class 3 special igniter is used, the main burner flame shall be proven by a flame scanner.

5.3.4.1.2 The igniter flame or arc shall impinge on the main burner air-fuel mixture and shall supply sufficient ignition energy to provide immediate ignition of all fuel discharge from the main burner under light-off conditions.

5.3.4.1.3* Igniter Safety Shutoff Valves. Two safety shutoff valves in series shall be provided in the fuel gas line to the igniter, and an automatic vent valve shall be provided between the two valves. When a listed automatic valve-proving system is used with two safety shutoff valves in series, the automatic vent valve shall be permitted to be omitted.

5.3.4.1.3.1* Valve-proving shall be performed either after every burner shutdown or prior to every burner light-off.

5.3.4.1.4 The igniter shall be designed for periodic removal, cleaning, and maintenance.

5.3.4.2 Main Burner.

5.3.4.2.1 The main burner shall direct the fuel and air into the furnace so as to provide a stable flame and efficient combustion over its entire operating range.

5.3.4.2.2 The limits of stable flame for the burner shall be determined by tests.

5.3.4.2.2.1 These tests shall be performed without the igniter in service and shall include the intended range and grade of fuel(s).

5.3.4.2.2.2* The tests shall verify that transients that are generated in the fuel and air systems do not adversely affect burner operation.

5.3.4.2.3 Each manual adjustment feature on the burner shall be provided with means for securing it in its intended position.

5.3.4.2.4 The atomizing equipment for oil burners shall be designed for periodic removal, cleaning, and maintenance.

5.3.4.2.5 Any procedure for clearing the atomizer and piping into the furnace prior to shutdown shall be accomplished while the fan is operating and the igniter is re-established or the main flame is proven continuously during this operation.

5.3.4.2.6 Clearing of the oil passages of the atomizer into the furnace immediately after a shutdown shall be prohibited.

5.3.4.3 Atomizing Medium for Oil Burners.

5.3.4.3.1 Where the fuel is to be atomized with the assistance of another medium, this atomizing medium shall be supplied free of contaminants that could cause an interruption of service.

5.3.4.3.2 The atomizing medium shall be provided at the pressure and temperature specified by the burner manufacturer.

5.3.4.3.3 Provisions shall be made to ensure that fuel cannot enter the atomizing medium line during or after operation.

5.3.4.4 Combustion Air Supply.

5.3.4.4.1 The combustion air supply equipment shall be capable of supplying combustion air for the optimum air-fuel ratio over the entire operating range of the burner.

5.3.4.4.2 Provisions shall be made for periodic cleaning of the combustion air supply equipment.

5.3.4.4.3 The requirements for the availability of combustion air shall be determined from NFPA 31, *Standard for the Installation of Oil-Burning Equipment*, and NFPA 54, *National Fuel Gas Code*.

5.3.4.4.3.1 Louvers and grilles shall be fixed in the open position or interlocked with the equipment so that they are opened automatically or manually during equipment operation. The interlock shall be placed on the driven member.

5.3.4.4.3.2 Fans supplying air to the boiler room for combustion shall be interlocked with the burner so that airflow is proven during equipment operation.

5.3.4.5 Furnace. The furnace shall be designed to promote main burner stability while minimizing zones that cannot be purged.

5.3.4.6 Combustion Products Removal.

5.3.4.6.1* The outlet draft equipment shall be capable of removing combustion products without adversely affecting stable flame conditions.

Copyright 2014 National Fire Protection Association (NFPA). Licensed, by agreement, for individual use and download on October 4, 2014 to LEADER and READER for designated user PATTARAPORN SRITRAKOOL. No other reproduction or transmission in any form permitted without written permission of NFPA. For inquires or to report unauthorized use, contact licensing@nfpa.org.

5.3.4.6.2 Where two or more boilers are connected to a common stack, each connection shall be equipped with a damper system.

5.3.4.6.2.1 All boiler outlet dampers shall be equipped with accessible operating and locking devices.

5.3.4.6.2.2 This equipment shall be compatible with the combustion control system of the boiler.

5.3.4.6.2.3 Interlocks shall be provided to prevent firing against a closed damper.

5.3.4.6.2.4 To prevent the interlock from being rendered nonfunctional if the linkage becomes disconnected, one of the following means shall be provided:

(1) Placing the interlock on the driven member
(2) Utilizing a furnace pressure switch
(3) Other approved means

5.3.4.6.2.5 Dampers shall not be required on the outlet of boilers of a type in which maintenance operations are performed from outside the boiler.

5.3.4.6.3* Permanently installed flue gas analyzers shall not present an ignition source hazard to the flue gas stream being sampled.

5.3.5* Combustion Control System.

5.3.5.1 The combustion control system shall be installed in accordance with the requirements of 4.13.1.

5.3.5.2 The combustion control system shall maintain air-fuel mixtures at pre-established ratios throughout the operating range of the burner and during changes in the firing rate.

5.3.5.3* The system shall provide limits on fuel and air to prevent furnace input from being reduced below the point of stable burner operation.

5.3.5.4 The minimum and maximum points of stable burner operation shall be defined by the burner manufacturer and verified by operational tests.

5.3.6 Interlock System.

5.3.6.1 The system shall be equipped with a method of determining the operating state of each interlock without disassembling any of the interlock devices.

5.3.6.2 Each interlock shall be provided with a method of establishing the set point.

5.3.6.3 Interlock devices shall be designed for anticipated environmental conditions, such as temperature, humidity, vibration, and corrosive agents.

5.3.6.4 Bypass.

5.3.6.4.1 The interlocks on the low water cutouts shall be permitted to be bypassed for blowdown purposes only.

5.3.6.4.2 The bypass of 5.3.6.4.1 shall be of a type that is temporarily held during blowdown.

5.3.6.4.3 Interlocks shall not be bypassed manually at any time during normal operation.

5.3.6.4.3.1 Interlocks shall be permitted to be bypassed as allowed by 5.3.6.4, 5.4.3.2.1(4), and 5.4.3.3.1(4).

5.3.6.5* Each safety control ac circuit shall be two wires, one side grounded, and shall be protected with a suitable fuse or circuit breaker in the hot side only.

5.3.6.6 Safety Control dc Circuits.

5.3.6.6.1 Safety control dc circuits shall be arranged as called for in 5.3.6.5 where grounding is possible.

5.3.6.6.2 Where grounding is not possible and the circuit voltage exceeds 50 volts, the circuit shall have switching contacts in one side of the line and shall be provided with ground-fault circuit interrupters.

5.3.7 Flame Safety Shutdown System.

5.3.7.1 The response time from flame failure to de-energization of the safety shutoff valves shall not exceed 4 seconds.

5.3.7.2 The response time from de-energization of the safety shutoff valves to full closure shall not exceed 1 second.

5.3.7.3 Where flame-sensing detectors can fail in the flame-proven mode, self-checking features shall be provided unless the burner is operated for periods less than 24 hours and the burner management system includes a safe-start component checking feature.

5.3.7.4 A safe-start component checking feature shall include a circuit incorporated in the burner management system that prevents light-off if the flame-sensing relay is in the flame-present position due to component failure or due to the presence of actual or simulated flame.

5.3.8 Electrical Equipment.

5.3.8.1* All electrical equipment and wiring shall conform to *NFPA 70, National Electrical Code*.

5.3.8.2 Special fuels or applications could require components for hazardous location and shall be reviewed during the design of the system.

5.3.9* Gas and Oil Firing: Special Problems. Systems installed or designed to reduce NO_x emissions shall be evaluated to ensure that the performance of flame safety and combustion control systems are not impaired.

5.4 Starting of a Cold Boiler.

5.4.1 General.

5.4.1.1 Starting of a cold boiler shall be accomplished in conformance with the manufacturer's recommendations.

5.4.1.2 In no case shall a boiler that has been taken out of service for maintenance, repair, or extended shutdown be started from a cold condition without a trained operator present.

5.4.1.3 Start-Up Procedures.

5.4.1.3.1 Applicable start-up procedures for the provided boiler shall be followed.

5.4.1.3.2 The firing rate shall be limited in accordance with the boiler manufacturer's instructions.

5.4.2 Gas-Fired Boilers. The procedures of Section 5.5 shall be followed for starting a cold gas-fired boiler.

5.4.3 Oil-Fired Burners. When steam is not available for heating oil, as an atomizing medium, or for driving auxiliary equipment, one of the starting methods described in 5.4.3.1, 5.4.3.2, or 5.4.3.3 shall be used.

5.4.3.1 Auxiliary Air Atomizing of Oil. When auxiliary air atomizing of oil is used for a cold start-up, all the equipment, facilities, and procedures listed in 5.4.3.1.1, 5.4.3.1.2, and 5.4.3.1.3 shall be required.

Copyright 2014 National Fire Protection Association (NFPA). Licensed, by agreement, for individual use and download on October 4, 2014 to LEADER and READER for designated user PATTARAPORN SRITRAKOOL. No other reproduction or transmission in any form permitted without written permission of NFPA. For inquires or to report unauthorized use, contact licensing@nfpa.org.

5.4.3.1.1 Required Equipment. The following equipment shall be required:

(1) Forced draft (FD) fan
(2) Approved auxiliary oil heater for start-up fuel flow with a capacity not less than that required for minimum fire with stable flame (only for fuel oils that require heating)
(3) Check valves in steam and air lines to the atomizer

5.4.3.1.2* Required Facility. An alternate atomizing air supply shall be required.

5.4.3.1.3 Starting Procedure. The following procedural steps shall be followed:

(1) Circulate and heat oil, using auxiliary heater and recirculating system, to satisfy all interlocks, where included.
(2) Follow the prefiring and light-off cycles as described in Section 5.5, using air as the atomizing medium.
(3) Set combustion control at the light-off firing rate.
(4) When steam pressure has reached the point required for heating and atomizing the oil, shut down in accordance with the normal shutdown procedure described in Section 5.5.
(5) Close the atomizing air supply and open the atomizing steam supply, making certain that dry steam is available.
(6) Change over from auxiliary oil heater to steam oil heater.
(7) Continue the boiler start-up sequence.

5.4.3.2 Auxiliary Mechanical Atomizing of Heavy Oil. When auxiliary mechanical atomizing of heavy oil is used for a cold start-up, all the equipment, facilities, and procedures in 5.4.3.2.1 and 5.4.3.2.2 shall be required.

5.4.3.2.1 Required Equipment. The following equipment and facilities shall be required:

(1) FD fan.
(2) Approved auxiliary oil heater for start-up fuel flow with a capacity not less than that required for minimum fire with stable flame.
(3) Mechanical atomizer.
(4) Means to bypass atomizing medium interlocks. The bypassed interlocks shall be made evident to the operator by means of warning devices.

5.4.3.2.2 Starting Procedure. The following procedural steps shall be followed:

(1) Circulate and heat oil using auxiliary heater and recirculating systems to satisfy oil interlocks, where included.
(2) Bypass atomizing medium interlocks. *[See 5.4.3.2.1(4).]*
(3) Insert mechanical atomizer.
(4) Follow the prefiring and light-off cycles as described in Section 5.5.
(5) Set combustion control at the light-off firing rate.
(6) When steam pressure has reached the point required for heating and atomizing the oil, shut down in accordance with the normal shutdown procedure as described in Section 5.5.
(7) Remove the mechanical atomizer.
(8) Insert the steam atomizer.
(9) Make the atomizing medium interlocks operable and place into service.
(10) Change over from auxiliary oil heater to steam oil heater.
(11) Continue the boiler start-up sequence.

5.4.3.3 Auxiliary Mechanical Atomizing of Light (Unheated) Oil. When auxiliary mechanical atomizing of light (unheated) oil is used for a cold start-up, all the equipment, facilities, and procedures in 5.4.3.3.1 through 5.4.3.3.3 shall be required.

5.4.3.3.1 Required Equipment. The following equipment shall be required:

(1) FD fan.
(2) Mechanical atomizer.
(3) Check valves in the heavy and light oil lines.
(4) Means to bypass atomizing medium interlocks. The bypassed interlocks shall be made evident to the operator by means of warning devices.

5.4.3.3.2 Required Facility. A light oil supply shall be required.

5.4.3.3.3 Starting Procedure. The following procedural steps shall be followed:

(1) Shut off heavy oil to the system.
(2) Insert the mechanical atomizer.
(3) Bypass oil and atomizing medium interlocks. *[See 5.4.3.3.1(4).]*
(4) Open the light oil supply into the system.
(5) Follow prefiring and light-off cycles described in Section 5.5.
(6) Set combustion control at the light-off rate.
(7) When steam pressure has reached the point required for heating and atomizing the oil, shut down in accordance with the normal shutdown procedure as described in Section 5.5.
(8) Shut off the light oil supply to the system.
(9) Remove the mechanical atomizer.
(10) Insert the steam atomizer.
(11) Make the oil and atomizing medium interlocks operable by removing bypasses.
(12) Open the heavy oil supply to the system.
(13) Continue the boiler start-up sequence.

5.5 Operating Systems.

5.5.1* General. This section shall be used to define requirements for automatic recycling and automatic nonrecycling operating systems.

5.5.1.1 Manual systems shall not be installed for new installations or major alterations.

5.5.1.2 Different arrangements shall be permitted if they provide protection and meet the intent of this code. *(See Figure A.5.3.1, Figure A.5.3.2.3, and Figure A.5.3.4.1 for typical arrangements.)*

5.5.2 Automatic (Recycling) Systems for Watertube Boilers.

5.5.2.1 An automatic (i.e., recycling) unit shall not be started from a cold condition unless a trained operator is present.

5.5.2.2 Underlying all the requirements of 5.5.2 shall be the premise that the unit is hot and that steam pressure and operating water level shall have been established.

5.5.2.3 The fuel to be fired shall have been manually selected.

5.5.2.4 The alternate fuel system shall be placed in a nonfiring condition, and the manual burner valve(s) shall be closed.

5.5.2.5 An igniter as specified in 5.3.4.1.1 shall be provided.

5.5.2.6 An automatic (i.e., recycling) unit shall recycle on high steam pressure, high water temperature, or low water level (not determined by the auxiliary low water cutout) and

Copyright 2014 National Fire Protection Association (NFPA). Licensed, by agreement, for individual use and download on October 4, 2014 to LEADER and READER for designated user PATTARAPORN SRITRAKOOL. No other reproduction or transmission in any form permitted without written permission of NFPA. For inquires or to report unauthorized use, contact licensing@nfpa.org.

perform four major functions as given in 5.5.2.6.1 through 5.5.2.6.4.4.

5.5.2.6.1 Prefiring Cycle. The prefiring cycle shall accomplish the following steps in the listed order, except that the order of steps (5), (6), and (7) in the sequence shall be permitted to vary:

(1) Prove the main fuel safety shutoff valves are closed.
(2) Prove no flame is present at the burner.
(3) Start the fan.
(4) Satisfy the fan interlock.
(5) Where an atomizing medium is used and if not already on, admit medium to main burner.
(6) Where an atomizing medium is used, satisfy the atomizing medium interlocks.
(7) Satisfy fuel interlocks.
(8) Prove the purge airflow by satisfying one of the following items:
    (a) Air pressure and "open damper" interlocks for all dampers in the flow path
    (b) Airflow interlock
(9) Purge airflow must reach no less than 70 percent of the airflow required at maximum continuous capacity of the unit.
(10) The purge must be for at least eight air changes. Airflow during the period of opening the damper and returning it to light-off position is permitted to be included in computing the time for eight air changes.
(11) Set controls to light-off position.
(12) Prove the dampers and fuel control valve are in light-off position.
(13) If a flue gas recirculation system is supplied, then it shall be purged per the manufacturer's instructions.

5.5.2.6.2 Light-Off Cycle.

5.5.2.6.2.1 Class 3 Igniter. The light-off cycle for a burner with a Class 3 igniter shall accomplish the following in the listed order:

(1)*Energize the ignition transformer and igniter fuel valves.
(2) Prove igniter flame within 10 seconds of the energization of the igniter fuel valves; for a Class 3 special igniter, proof of igniter operation is not required.
    (a) If proven, admit fuel to main burner. For an oil burner other than a return flow type, simultaneously shut off oil-recirculating flow.
    (b) If not proven, establish safety shutdown.
(3) After a maximum of 10 seconds for gas and Nos. 2 and 4 oils or 15 seconds for Nos. 5 and 6 oils, shut off igniter.
(4) Prove main flame *(see 5.3.4.1.1.3 and 5.3.4.1.1.4)* and proceed as follows:
    (a) If proven, release to modulating control where provided.
    (b) If not proven, establish safety shutdown.

5.5.2.6.2.2 Class 2 Igniter. The light-off cycle for a burner with a Class 2 igniter shall accomplish the following in the listed order:

(1)*Energize the ignition transformer and igniter fuel valves.
(2) Prove igniter flame within 10 seconds of the energization of the igniter fuel valves and proceed as follows:
    (a) If proven, admit fuel to the main burner. For an oil burner other than a return flow type, simultaneously shut off the recirculating flow.
    (b) If not proven, establish safety shutdown.
(3) After a maximum of 10 seconds for gas and Nos. 2 and 4 oils or 15 seconds for Nos. 5 and 6 oils, prove the main flame *(see 5.3.4.1.1.2)* and proceed as follows:
    (a) If proven, release to combustion control for modulation, where provided.
    (b) If not proven, establish safety shutdown.

5.5.2.6.2.3 Class 1 Igniter. The light-off cycle for a burner with a Class 1 igniter shall accomplish the following in the listed order:

(1)*Energize the ignition transformer and igniter fuel valves.
(2) Prove igniter flame within 10 seconds of the energization of the igniter fuel valves and proceed as follows:
    (a) If proven, admit fuel to the main burner. For an oil burner other than a return flow type, simultaneously shut off recirculating flow.
    (b) If not proven, establish safety shutdown.
(3) After a maximum of 10 seconds for gas and Nos. 2 and 4 oils or 15 seconds for Nos. 5 and 6 oils, prove the main flame *(see 5.3.4.1.1.1)* and proceed as follows:
    (a) If proven, release to combustion control for modulation, where provided.
    (b) If not proven, establish safety shutdown.

5.5.2.6.3 Modulation. Modulation, where provided, shall be accomplished by a combustion control system.

5.5.2.6.4 Shutdown.

5.5.2.6.4.1 Normal Shutdown. For automatic (i.e., recycling) boilers, high steam pressure, high water temperature, or low water level (not determined by the auxiliary low water cutout) shall accomplish a normal shutdown, and the burner shall be allowed to recycle when steam pressure, water temperature, or water level has returned to within the preset operating range.

5.5.2.6.4.2 Normal Shutdown Cycle. The normal shutdown cycle shall accomplish the following in the listed order:

(1) Shut off the fuel supply to the main burner.
(2) For oil, proceed as follows:
    (a) If a Class 1 igniter is used, use the manufacturer's instructions to purge the main burner oil gun prior to continuing the normal shutdown.
    (b) Where used, open the recirculating valve.
    (c) Shut off atomizing medium, if required by operating procedures.
(3) Shut off the fuel supply to the igniter if in operation.
(4) Perform a postpurge of the furnace and boiler gas passes; the duration of the postpurge must be no less than 15 seconds at an airflow rate not exceeding that at which the unit was shut down.
(5) Shut down the fan, if required by operating procedures.

5.5.2.6.4.3* Safety Shutdown. Any of the conditions in 5.5.2.6.4.3(A) or 5.5.2.6.4.3(B) shall accomplish a safety shutdown, and the burner shall not be allowed to recycle until a trained operator determines the cause of the shutdown and takes the necessary corrective action to ensure that conditions are within specified operating limits prior to restarting.

(A) Oil conditions shall include the following:

(1) Low fuel pressure
(2) Low temperature of heated oils
(3) Loss of combustion air supply
(4) Loss of or failure to establish flame

Copyright 2014 National Fire Protection Association (NFPA). Licensed, by agreement, for individual use and download on October 4, 2014 to LEADER and READER for designated user PATTARAPORN SRITRAKOOL. No other reproduction or transmission in any form permitted without written permission of NFPA. For inquires or to report unauthorized use, contact licensing@nfpa.org.

(5) Loss of control system actuating energy
(6) Power failure
(7) Low water level as determined by the auxiliary low water cutout
(8) Loss of atomizing medium, where used, as interlocked by flow or two pressure switches (one located at the service connection and the other at the burner, either one of which shall initiate a safety shutdown on low pressure)
(9) Excessive steam pressure or water temperature
(10) High temperature of heated oil

(B) Gas conditions shall include the following:

(1) High gas pressure
(2) Low gas pressure
(3) Loss of combustion air supply
(4) Loss of or failure to establish flame
(5) Loss of control system actuating energy
(6) Power failure
(7) Low water level as determined by the auxiliary low water cutout
(8) Excessive steam pressure or water temperature

5.5.2.6.4.4 Safety Shutdown Cycle. The safety shutdown cycle shall accomplish the following in the listed order and shall activate an alarm:

(1) Shut off the fuel supply to the main burner.
(2) Shut off the fuel supply and interrupt spark to the igniter if in operation.
(3) For oil, proceed as follows:
  (a) Where used, open the recirculating valve.
  (b) Where used, shut off the atomizing medium, if required by operating procedures.
(4) Where the inerting system is used, energize it simultaneously with 5.5.2.6.4.4(1).
(5) Perform a postpurge of the furnace and boiler gas passes. The duration of the postpurge must be no less than 15 seconds at an airflow rate not exceeding that at which the unit was shut down.
(6) After postpurge, shut down the fan, if desired.
(7) Require manual reset.

5.5.3 Automatic (Nonrecycling) Systems for Watertube Boilers.

5.5.3.1 The provisions of 5.5.2.1, 5.5.2.3, 5.5.2.5, and 5.5.2.6 shall apply.

5.5.3.2 The provisions of 5.5.2.6.4.1 shall not apply.

5.5.3.3 When high steam pressure, high water temperature, or low water level establishes a normal shutdown, the burner shall not be allowed to recycle.

5.5.3.4 A trained operator shall initiate the restart.

5.5.4 Automatic (Recycling) Systems for Firetube Boilers.

5.5.4.1 Underlying all the requirements of 5.5.4 shall be the premise that the equipment is in accordance with Section 5.3, that the boiler has been placed in service in accordance with Section 5.5, and that the operating water level has been established.

5.5.4.2 An automatic (i.e., recycling) unit shall recycle on high steam pressure, high water temperature, or low water level (not determined by the auxiliary low water cutout) and perform four major functions as given in 5.5.4.2.1 through 5.5.4.2.4.4(B).

5.5.4.2.1 Prefiring Cycle. The prefiring cycle shall accomplish the following steps in the listed order, except that the order of steps (5), (6), and (7) in the sequence shall be permitted to vary:

(1) Prove the fuel safety shutoff valves are closed.
(2) Prove no flame is present at burner.
(3) Start the fan.
(4) Satisfy the fan interlock.
(5) Where an atomizing medium is used and if not already on, admit the medium to the main burner.
(6) Where an atomizing medium is used, satisfy the atomizing medium interlocks.
(7) Satisfy the fuel interlocks.
(8) Prove purge airflow by satisfying one of the following two items:
  (a) Air pressure and "open damper" interlocks for all dampers in the flow path
  (b) Airflow interlock
(9) Purge airflow must reach no less than 70 percent of the airflow required at maximum continuous capacity of the unit.
(10) The purge of the furnace and boiler gas passes must be for at least four air changes and under the following conditions:
  (a) During the purge, the air damper must be driven to the full open position.
  (b) Airflow during the time to open the damper and return it to light-off position is permitted to be included in computing the time for four air changes.
(11) Prove the control system is in light-off position.
(12) If a flue gas recirculation system is supplied, then it shall be purged per the manufacturer's instructions.

5.5.4.2.2 Light-Off Cycle. The light-off cycle shall accomplish the following in the listed order:

(1)*Energize the ignition transformer and igniter fuel valves.
(2) Prove the igniter flame within 10 seconds of the energization of the igniter fuel valves and proceed as follows (for a Class 3 special igniter, proof of igniter operation is not required):
  (a) If proven, admit fuel to main burner.
  (b) If not proven, establish safety shutdown.
(3) After a maximum of 10 seconds for gas and Nos. 2 and 4 oils or 15 seconds for Nos. 5 and 6 oils, shut off the igniter.
(4) Prove the main flame and proceed as follows:
  (a) If proven, release to modulating control where provided.
  (b) If not proven, establish safety shutdown.

5.5.4.2.3 Modulation. Modulation, where provided, shall be accomplished by a combustion control system.

5.5.4.2.4 Shutdown.

5.5.4.2.4.1 Normal Shutdown Cycle. The normal shutdown cycle shall accomplish the following in the listed order:

(1) Shut off the fuel supply to the main burner.
(2) For oil, proceed as follows:
  (a) Where used, open the recirculating valve.
  (b) Where the manufacturer's instructions permit, purging the main burner oil gun in conjunction with the operation of its igniter is permitted.
  (c) Where used, shut off the atomizing medium, if required by operating procedures.

Copyright 2014 National Fire Protection Association (NFPA). Licensed, by agreement, for individual use and download on October 4, 2014 to LEADER and READER for designated user PATTARAPORN SRITRAKOOL. No other reproduction or transmission in any form permitted without written permission of NFPA. For inquires or to report unauthorized use, contact licensing@nfpa.org.

(3) Perform a postpurge of the furnace and boiler gas passes. The duration of the postpurge must be no less than 15 seconds at an airflow rate not exceeding that at which the unit was shut down.
(4) After postpurge, shut down the fan, if required by operating procedures.

5.5.4.2.4.2 Normal Shutdown. High steam pressure, high water temperature, or low water (not determined by the auxiliary low water cutoff) shall accomplish a normal shutdown, and the burner shall be allowed to recycle when steam pressure, water temperature, or water level has returned to within the preset operating range.

5.5.4.2.4.3 Safety Shutdown Cycle. The safety shutdown cycle shall accomplish the following in the listed order:

(1) Shut off the fuel supply to the main burner.
(2) Shut off the fuel supply and interrupt the spark to the igniter, if in operation.
(3) For oil, proceed as follows:
  (a) Where used, open the recirculating valve.
  (b) Where used, shut off the atomizing medium, if required by operating procedures.
(4) Where the inerting system is used, energize it simultaneously with 5.5.4.2.4.3(1).
(5) Perform a postpurge of the furnace and boiler gas passes. The duration of the postpurge must be no less than 15 seconds at an airflow rate not exceeding that at which the unit was shut down.
(6) After postpurge, shut down the fan, if required by operating procedures.
(7) Require manual reset.

5.5.4.2.4.4* Safety Shutdown. Any of the conditions in 5.5.4.2.4.4(A) or 5.5.4.2.4.4(B) shall accomplish a safety shutdown, and the burner shall not be allowed to recycle until a trained operator determines the cause of the shutdown and takes the necessary corrective action to ensure that conditions are within specified operating limits prior to restarting.

(A) Oil conditions shall include the following:

(1) Low oil pressure
(2) Low temperature of heated oils
(3) Loss of combustion air supply
(4) Loss of or failure to establish flame
(5) Loss of control system actuating energy
(6) Low water level as determined by the auxiliary low water cutout
(7) Loss of atomizing medium where used
(8) Excessive steam pressure or water temperature
(9) Power failure
(10) High temperature of heated oil

(B) Gas conditions shall include the following:

(1) High gas pressure
(2) Low gas pressure
(3) Loss of combustion air supply
(4) Loss of or failure to establish flame
(5) Loss of control system actuating energy
(6) Low water level as determined by the auxiliary low water cutout
(7) Excessive steam pressure or water temperature
(8) Power failure

5.5.5 Automatic (Nonrecycling) Systems for Firetube Boilers.

5.5.5.1 The provisions of 5.5.4.1 and 5.5.4.2 shall apply, except that 5.5.4.2.4.2 shall not apply.

5.5.5.2 When high steam pressure, high water temperature, or low water level establishes a normal shutdown, the burner shall not be allowed to recycle.

5.5.5.3 A trained operator shall initiate the restart.

5.5.6 Supervised Manual Systems for Oil-Fired Watertube Boilers.

5.5.6.1 For oil-fired watertube boilers, the steps listed in Table 5.5.6.1(a) through Table 5.5.6.1(d) shall be taken by a trained operator when starting a supervised manual unit, and the indicated interlocks shall be satisfied at each step.

5.5.6.1.1 Fuel pressure and temperature, atomizing medium, control system energy, power, and water level shall have been established.

5.5.6.1.2 When interlocks have been satisfied, this fact shall be indicated to the operator.

5.5.6.2 The fuel to be fired shall be selected.

5.5.6.2.1 The alternate fuel system shall be placed in a nonfiring condition.

5.5.6.2.2 The supervisory or safety shutoff valve(s) shall be closed.

5.5.6.3 An igniter as specified in 5.3.4.1.1 shall be provided.

5.5.6.4* Any of the following conditions shall accomplish a safety shutdown, and the burner shall not be restarted until a trained operator goes out to the boiler, determines the cause of the shutdown, and takes the necessary corrective action to ensure that conditions are within specified operating limits prior to restarting:

(1) Low pressure in the fuel supply
(2) Loss of combustion air supply
(3) Loss or failure to establish flame
(4) Loss of control system actuating energy
(5) Power failure
(6) Low water level as determined by the auxiliary low water cutout
(7) Loss of atomizing medium
(8) Excessive steam pressure or water temperature

5.5.6.5 Where oil heating is provided, either of the following conditions shall cause alarms to sound:

(1) Low oil temperature
(2) High oil temperature

5.5.7 Supervised Manual Systems for Gas-Fired Watertube Boilers.

5.5.7.1 For gas-fired watertube boilers, the steps listed in Table 5.5.7.1(a) through Table 5.5.7.1(d) shall be taken by a trained operator when starting a supervised manual unit, and the indicated interlocks shall be satisfied at each step.

5.5.7.1.1 Control system energy, power, and water level shall have been established.

5.5.7.1.2 When interlocks have been satisfied, this fact shall be indicated to the operator.

5.5.7.2 The fuel to be fired shall be selected.

5.5.7.2.1 The alternate fuel system shall be placed in a nonfiring condition.

5.5.7.2.2 The supervisory or safety shutoff valve(s) shall be closed.

Copyright 2014 National Fire Protection Association (NFPA). Licensed, by agreement, for individual use and download on October 4, 2014 to LEADER and READER for designated user PATTARAPORN SRITRAKOOL. No other reproduction or transmission in any form permitted without written permission of NFPA. For inquires or to report unauthorized use, contact licensing@nfpa.org.

Table 5.5.6.1(a) Oil-Fired Watertube Boilers: Prefiring Cycle

Operator Actions*	Interlock Functions
(1) Check that fuel safety or supervisory shutoff valve is closed.	(1) Fuel safety or supervisory shutoff valve is closed.
(2) Start fan.	(2) Fan is on.
(3) Where used, open atomizing medium valve.	(3) Atomizing medium supply is available.
(4) Open damper(s) to purge position.	(4) (a) Air pressure and open damper(s) or (b) airflow. *[See 5.5.2.6.1(9) and 5.5.2.6.1(10).]*
(5) Start purge timer.	(5) Purge is complete.
(6) Place damper and fuel control valve in light-off position.	(6) Damper and fuel control valve are in light-off position. If light-off airflow is less than purge airflow rate, start light-off time limit timer.
(7) None.	(7) Spark, igniter, and main safety shutoff valves are ready for operation.

*In listed order.

Table 5.5.6.1(b) Oil-Fired Watertube Boilers: Light-Off Cycle

Operator Actions*	Interlock Functions
(1) Energize ignition transformer and igniter safety shutoff valves.	(1) Prove igniter flame within 10 seconds of energization of igniter fuel valves. (For Class 3 special igniter, proof of igniter operation is not required.)
(2) Open fuel safety shutoff valve to main burner.	(2) None.
(3) Close recirculating valve, where used.	(3) None.
(4) Open manual fuel shutoff valve.	(4) Prove main flame within 10 seconds for Nos. 2 and 4 oils or 15 seconds for Nos. 5 and 6 oils. Close igniter safety shutoff valve(s).
(5) Bring unit to present operating pressure at rate specified by manufacturer, maintaining air-fuel ratios as established by tests.	(5) None.
(6) On reaching preset pressure range, change to automatic combustion control.	(6) None.

*In listed order.

Copyright 2014 National Fire Protection Association (NFPA). Licensed, by agreement, for individual use and download on October 4, 2014 to LEADER and READER for designated user PATTARAPORN SRITRAKOOL. No other reproduction or transmission in any form permitted without written permission of NFPA. For inquires or to report unauthorized use, contact licensing@nfpa.org.

Table 5.5.6.1(c) Oil-Fired Watertube Boilers: Normal Shutdown Cycle

Operator Actions*	Interlock Functions
(1) Shut off fuel supply to main burner.	(1) Fuel safety shutoff valve(s) to main burner is closed.
(2) Open fuel recirculating valve, where used.	(2) None.
(3) Shut off atomizing medium, where used.	(3) None.
(4) Remove fuel atomizer.	(4) None.
(5) Perform postpurge of furnace and boiler gas passes. Duration of postpurge must be no less than 15 seconds at airflow rate not exceeding that at which unit was shut down.	(5) None.
(6) After postpurge, fan can be permitted to be shut down.	(6) None.

*In listed order.

Table 5.5.6.1(d) Oil-Fired Watertube Boilers: Safety Shutdown Cycle

Operator Actions*	Interlock Functions
(1) None.	(1) Shut off fuel supply to main burner; shut off fuel supply and interrupt spark to igniter, if in operation.
(2) Perform postpurge of furnace and boiler gas passes. Duration of postpurge must be no less than 15 seconds at airflow rate not exceeding that at which unit was shut down.	(2) None.
(3) After postpurge, fan can be permitted to be shut down.	(3) None.

*In listed order.

Table 5.5.7.1(a) Gas-Fired Watertube Boilers: Prefiring Cycle

Operator Actions*	Interlock Functions
(1) Check that gas safety shutoff valves are closed.	(1) Gas safety shutoff valves are closed.
(2) Start fan.	(2) Fan motor is on.
(3) Open damper(s) to purge position.	(3) (a) Air pressure and open damper(s) or (b) airflow. *[See 5.5.2.6.1(9) and 5.5.2.6.1(10).]*
(4) Start purge timer.	(4) Purge is complete.
(5) Place damper and gas control valve in light-off position.	(5) Damper and fuel control valve are in light-off position. If light-off airflow is less than purge airflow rate, start light-off time limit timer.
(6) None.	(6) Spark and igniter and main safety shutoff valves are ready for operation.

*In listed order.

Copyright 2014 National Fire Protection Association (NFPA). Licensed, by agreement, for individual use and download on October 4, 2014 to LEADER and READER for designated user PATTARAPORN SRITRAKOOL. No other reproduction or transmission in any form permitted without written permission of NFPA. For inquires or to report unauthorized use, contact licensing@nfpa.org.

Table 5.5.7.1(b) Gas-Fired Watertube Boilers: Light-Off Cycle

Operator Actions*	Interlock Functions
(1) Energize ignition transformer and igniter safety shutoff valve(s).	(1) Prove igniter flame within 10 seconds of the energization of igniter fuel valves. (For Class 3 special igniter, proof of igniter operation is not required.)
(2) Open gas safety shutoff valves to main burner.	(2) Prove main flame is within 10 seconds. Close igniter safety shutoff valve(s).
(3) Bring unit to preset operating pressure at rate specified by manufacturer, maintaining air-fuel ratios as established by tests.	(3) None.
(4) On reaching preset range, change to automatic combustion control.	(4) None.

*In listed order.

Table 5.5.7.1(c) Gas-Fired Watertube Boilers: Normal Shutdown Cycle

Operator Actions*	Interlock Functions
(1) Shut off gas supply to main burner and to igniter, if in operation, and interrupt spark.	(1) None.
(2) Perform postpurge of furnace and boiler gas passes. Duration of postpurge must be no less than 15 seconds at airflow rate not exceeding that at which unit was shut down.	(2) None.
(3) After postpurge, fan can be permitted to be shut down.	(3) None.

*In listed order.

Table 5.5.7.1(d) Gas-Fired Watertube Boilers: Safety Shutdown Cycle

Operator Actions*	Interlock Functions
(1) None.	(1) Shut off gas supply to main burner, shut off fuel supply, and interrupt spark to igniter, if in operation. Where used, simultaneously energize inerting system.
(2) Perform postpurge of furnace and boiler gas passes. Duration of postpurge must be no less than 15 seconds at an airflow rate not exceeding that at which unit was shut down.	(2) None.
(3) After postpurge, fan can be permitted to be shut down.	(3) None.

*In listed order.

Copyright 2014 National Fire Protection Association (NFPA). Licensed, by agreement, for individual use and download on October 4, 2014 to LEADER and READER for designated user PATTARAPORN SRITRAKOOL. No other reproduction or transmission in any form permitted without written permission of NFPA. For inquires or to report unauthorized use, contact licensing@nfpa.org.

5.5.7.3 An igniter as specified in 5.3.4.1.1 shall be provided.

5.5.7.4 Any of the following conditions shall accomplish a safety shutdown, and the burner shall not be restarted until a trained operator goes out to the boiler, determines the cause of the shutdown, and takes the necessary corrective action to ensure that conditions are within specified operating limits prior to restarting:

(1) High gas pressure
(2) Low gas pressure
(3) Loss of combustion air supply
(4) Loss of or failure to establish flame
(5) Loss of control systems actuating energy
(6) Power failure
(7) Low water level as determined by the auxiliary low water cutout
(8) Excessive steam pressure or water temperature

5.5.8 Soot Blowing. Where soot blowers are used, the following shall apply:

(1) Soot blowing at nonoptimum air-fuel ratios has been known to lead to explosive formations of air-soot clouds within the boiler and shall be avoided.
(2) Soot blowers shall be operated only while burners are firing at rates such that the burner flame cannot be extinguished.
(3) Boilers that are equipped with automatic soot-blowing equipment shall have their controls interlocked to prevent operation when the burner is shut down or in the prefiring or light-off cycles.

5.6 Simultaneous Firing of Oil and Gas Fuels.

5.6.1* General. The equipment and procedures required in 5.6.1.1 through 5.6.1.3 shall be used to avoid a hazardous furnace condition when firing oil and gas simultaneously in a single burner boiler on a continuous basis.

5.6.1.1 Class 1 or Class 2 igniters shall be used during the light-off of the second fuel as required by the manufacturer or as established by test.

5.6.1.2 Each boiler shall be tested during initial start-up to determine whether any modifications to the procedures specified in Section 5.5 are required to establish ignition or to satisfy other design limitations during light-off, warm-up, or normal operation.

5.6.1.3 The initial prefiring cycle, light-off cycle, and normal shutdown cycles for the initial fuel to be fired and for single fuel operation shall be completed in accordance with Section 5.5.

5.6.2 Equipment Requirements. The following equipment shall be provided for continuous firing of both oil and gas:

(1) A burner that is capable of burning either oil or gas fuel individually or both fuels simultaneously
(2) A combustion control system that is capable of performing the following functions:
    (a) Metering and totaling the inputs from both gas and oil fuels alone or in any combination
    (b) Proportioning the total fuel input of each fuel individually or in any combination to total airflow in order to maintain the air-fuel ratio within design limits
    (c) Limiting fuel demand to be less than measured airflow and limiting air demand to be greater than measured fuel flow
    (d) For items 5.6.2(2)(a) through 5.6.2(2)(c), a control system that is designed to accommodate a fixed amount of secondary fuel without metering and totaling all fuels shall be permitted, provided the system maintains air-fuel ratios within design limits throughout the entire operating range of the burner
    (e) Limiting total fuel input to the maximum capacity of the boiler
    (f) Controlling and maintaining a minimum airflow rate that takes into account simultaneous fuel inputs
    (g) Controlling and maintaining minimum input rates of each fuel
    (h) Requiring a stable return to design air-fuel ratio after the trip or shutdown of either fuel
(3) A safety interlock system with the following capabilities:
    (a) Meets the requirements of 5.3.6 for each fuel being fired
    (b) Requires, on an interlock action specific to only one of the fuels being fired, that this particular fuel automatically shut down with operation continuing on the unaffected fuel in a stable manner; shutdown of both fuels permitted
    (c) Requires that both the first and second fuels be introduced with their flow control valves in light-off positions
    (d) Provides for the introduction of the second fuel without requiring a boiler purge
    (e) Requires a manual reset following any interlock shutdown
    (f) Prohibits the simultaneous light-off of both fuels
    (g) Requires flame detector(s) in accordance with 5.3.4 to supervise any of the following conditions:
        i. Igniter flame as permitted by igniter class
        ii. Gas firing
        iii. Oil firing
        iv. Combined gas and oil firing
    (h) Burner flame detectors permitted to supervise multiple fuels

5.6.3 Simultaneous Firing of Oil and Gas Fuels (Automated Second Fuel Start). This subsection shall define the requirements and procedures for an automated light-off and subsequent operation on a continuous basis of a second fuel.

5.6.3.1 Equipment Requirements. Equipment requirements shall be in accordance with 5.6.2 and 5.6.3.2.

5.6.3.2 A fuel transfer mode with the following functions shall be provided:

(1) A gas-firing mode in which oil cannot be fired
(2) An oil-firing mode in which gas cannot be fired
(3) A gas-oil-firing mode that permits simultaneous firing of both fuels
(4) The capability to signal the combustion control system to bias up the airflow, to position the control valve for the second fuel to light-off, and to open the safety shutoff valve(s) of the fuel being introduced
(5) The capability to bias up the airflow by a preset value in response to a fuel transfer signal while the airflow remains in automatic mode

5.6.3.3 Subsequent Fuel Light-Off — Oil. When oil is introduced as the second fuel, the light-off cycle for the oil shall accomplish the following in the listed order:

(1) Place fuel gas flow and airflow control loops in automatic mode.

Copyright 2014 National Fire Protection Association (NFPA). Licensed, by agreement, for individual use and download on October 4, 2014 to LEADER and READER for designated user PATTARAPORN SRITRAKOOL. No other reproduction or transmission in any form permitted without written permission of NFPA. For inquires or to report unauthorized use, contact licensing@nfpa.org.

(2) Satisfy oil fuel system interlocks.
(3) Install oil atomizer.
(4) Open atomizing medium shutoff valve.
(5) Select dual fuel firing.
(6) Set oil control valve in light-off position.
(7) Prove fuel oil control valve in light-off position.
(8) With airflow in automatic mode, gradually bias up airflow by a preset amount corresponding to fuel input of fuel oil in light-off.
(9) Establish ignition energy in accordance with manufacturer's instructions. Where an igniter is required, see 5.5.2.6.2, 5.5.2.6.2.2, or 5.5.2.6.2.3 for operating requirements.
(10) Open oil safety shutoff valves and establish oil flow through the burner.
(11) Gradually remove airflow bias.
(12) Verify stable flame and that the air-fuel ratio is within design limits.
(13) Place the combustion control system into the desired mode for controlling input rate of each fuel.
(14) Shut down igniter as required.

5.6.3.4 Subsequent Fuel Light-Off — Gas. When gas is introduced as the second fuel, the light-off cycle for the gas shall accomplish the following in the listed order:

(1) Place fuel oil flow and airflow control loops in automatic mode.
(2) Satisfy gas fuel system interlocks.
(3) Select dual fuel firing.
(4) Set gas control valve in light-off position.
(5) Prove fuel gas control valve in light-off position.
(6) With airflow in automatic mode, gradually bias up airflow by a preset amount corresponding to fuel input of fuel gas in light-off.
(7) Establish ignition energy in accordance with manufacturer's instructions. Where an igniter is required, see 5.5.2.6.2, 5.5.2.6.2.2, or 5.5.2.6.2.3 for operating requirements.
(8) Close the vent valve (where used), open the gas safety shutoff valves, and establish gas flow to the burner.
(9) Gradually remove airflow bias.
(10) Verify stable flame and that the air-fuel ratio is within design limits.
(11) Place the combustion control system into the desired mode for controlling input rate of each fuel.
(12) Shut down igniter as required.

5.6.4 Simultaneous Firing of Oil and Gas Fuels (Manual Second-Fuel Start). This subsection shall define the requirements and procedures required for the manual light-off and subsequent operation on a continuous basis of a second fuel.

5.6.4.1 Equipment Requirements. Equipment requirements shall be in accordance with 5.6.2 and 5.6.4.2.

5.6.4.2 The combustion control system shall have the capability to manually bias up the airflow while the airflow remains in automatic mode.

5.6.4.2.1 Either the oxygen trim or airflow control station shall be permitted to be used.

5.6.4.3 Subsequent Fuel Light-Off — Oil. When oil is introduced as the second fuel, the light-off cycle for the oil shall accomplish the following in the order listed:

(1) Verify that fuel gas flow and airflow control loops are in automatic mode.
(2) Satisfy oil fuel system interlocks.
(3) Install oil atomizer.
(4) Open atomizing medium shutoff valve.
(5) Place oil control valve in light-off position.
(6) With airflow in automatic mode, gradually bias up airflow by a preset amount corresponding to fuel input of fuel oil in light-off.
(7) Establish ignition energy in accordance with manufacturer's instructions. Where an igniter is required, see 5.5.2.6.2, 5.5.2.6.2.2, or 5.5.2.6.2.3 for operating requirements.
(8) Open oil safety shutoff valves and establish oil flow through the burner.
(9) Gradually remove airflow bias.
(10) Verify stable flame and that the air-fuel ratio is within design limits.
(11) Place the combustion control system into the desired mode for controlling the input rate of each fuel.
(12) Shut down igniter as required.

5.6.4.4 Subsequent Fuel Light-Off — Gas. When gas is introduced as the second fuel, the procedure shall be in the following order:

(1) Verify that fuel oil flow and airflow control are in the automatic mode.
(2) Satisfy gas fuel system interlocks.
(3) Place the gas control valve in light-off position.
(4) With airflow in automatic mode, gradually bias up airflow by a preset amount corresponding to fuel input of fuel oil in light-off.
(5) Establish ignition energy in accordance with manufacturers' instructions. Where an igniter is required, see 5.5.2.6.2, 5.5.2.6.2.2, or 5.5.2.6.2.3 for operating requirements.
(6) Close the vent valve (where used), open the gas safety shutoff valves, and establish gas flow to the burner.
(7) Gradually remove airflow bias.
(8) Verify stable flame and that the air-fuel ratio is within design limits.
(9) Place the combustion control system into the desired mode for controlling input rate of each fuel.
(10) Shut down igniter as required.

5.6.5 Shutdown Cycle.

5.6.5.1 Normal Oil Shutdown Cycle. The normal shutdown procedure for oil while continuing to fire gas shall be in the following order:

(1) Reduce the oil flow to the light-off rate.
(2) Shut off the oil supply to the burner and open the oil recirculating valve, where used.
(3) Verify stable flame and adjust air-fuel ratio in preparation for purging the oil atomizer.
(4) Purge oil passages of the oil atomizer.
(5) Shut off the atomizing medium, if required.
(6) Remove the oil atomizer from the burner, if required.
(7) Verify stable flame and that the air-fuel ratio of the gas fire is within design limits.

5.6.5.2 Normal Gas Shutdown Cycle. The normal shutdown procedure for gas while continuing to fire oil shall be in the following order:

(1) Reduce the gas flow to the light-off rate.
(2) Shut off the gas supply to the burner.
(3) Verify stable flame and that the air-fuel ratio of the oil fire is within design limits./List

Copyright 2014 National Fire Protection Association (NFPA). Licensed, by agreement, for individual use and download on October 4, 2014 to LEADER and READER for designated user PATTARAPORN SRITRAKOOL. No other reproduction or transmission in any form permitted without written permission of NFPA. For inquires or to report unauthorized use, contact licensing@nfpa.org.

5.6.5.3* Oil Safety Shutdowns.

5.6.5.3.1 Any of the following operating conditions shall accomplish a safety shutdown of the oil supply to the burner (i.e., fuel trip):

(1) Low fuel pressure
(2) Low temperature of heated oils
(3) Loss of atomizing medium, where used, as interlocked by flow or two pressure switches, one located at the service connection and the other at the burner, either one of which shall initiate a safety shutdown on low pressure
(4) High temperature of heated oil

5.6.5.3.2 A complete boiler safety shutdown shall occur if oil is the only fuel being fired.

5.6.5.4 Gas Safety Shutdowns.

5.6.5.4.1 Either of the following conditions shall accomplish a safety shutdown of the gas supply to the burner (i.e., fuel trip):

(1) High gas pressure
(2) Low gas pressure

5.6.5.4.2 A complete boiler safety shutdown shall occur if gas is the only fuel being fired.

5.6.5.5 Boiler Safety Shutdowns. Any of the following conditions shall accomplish a complete safety shutdown of the boiler:

(1) Loss of combustion air supply
(2) Loss of or failure to establish flame
(3) Loss of control system actuating energy
(4) Power failure
(5) Excessive steam pressure or water temperature
(6) Low water level as determined by the auxiliary low water cutout
(7) The occurrence of either an oil or a gas fuel trip when only that fuel is being fired

5.7 Simultaneous Firing of Oil and Gas for Fuel Transfer Only.

5.7.1* General. The equipment and procedures of 5.7.1.1 through 5.7.1.4 shall be used to avoid a hazardous furnace condition when operation of the boiler is transferred from fuel oil to fuel gas or from fuel gas to fuel oil without requiring a shutdown of the boiler.

5.7.1.1 Simultaneous Firing for Fuel Transfer on a Continuous Basis. When the combustion control system and the burner management system are both designed for fuel transfer and simultaneous firing of oil and gas fuels on a continuous basis, the requirements of Section 5.6 shall apply.

5.7.1.2 Class 1 or Class 2 igniters shall be used during the fuel transfer as required by the manufacturer or established by test.

5.7.1.3 Each boiler shall be tested during initial start-up to determine whether any modifications to the procedures specified in Section 5.5 are required to establish ignition or to satisfy other design limitations during light-off, warm-up, or normal operation.

5.7.1.4 The initial prefiring cycle, light-off cycle, and normal shutdown cycles for the initial fuel to be fired and for single fuel operation shall be completed in accordance with Section 5.5.

5.7.2 Required Equipment. The following equipment shall be required:

(1) A burner that is capable of firing the two fuels simultaneously during the transfer period
(2) A combustion control system that is capable of performing the following functions:
  (a) Proportioning fuel flow for each fuel individually
  (b) Limiting total fuel input to the maximum capacity of the boiler
  (c) Controlling a minimum airflow rate
  (d) Controlling minimum input rates of each fuel
  (e) Providing a stable return to design air-fuel ratio after the trip or shutdown of either fuel
(3) A fuel transfer mode that includes the following:
  (a) A gas-firing mode in which oil cannot be fired
  (b) An oil-firing mode in which gas cannot be fired
  (c) A gas-oil-firing mode that permits simultaneous firing of both fuels, provided all interlocks for both fuels are satisfied, including light-off position for both fuel valves
  (d) A control device, transfer timer, and an alarm for 5.7.2(3)(c), to limit continuous operation in this mode
(4) A safety interlock system with the following capabilities:
  (a) Meets the requirements of 5.3.6 for each fuel being fired
  (b) Provides, on an interlock action peculiar to only one of the fuels being fired, that this particular fuel automatically shuts down with operation continuing on the unaffected fuel in a stable manner; shutdown of both fuels permitted
  (c) Provides that both the first and second fuels be introduced with their flow control valves in light-off positions
  (d) Provides an interlock action that will trip either fuel should its respective flow control valve leave a predetermined setting during fuel transfer
  (e) Provides for the introduction of the second fuel without requiring a boiler purge
  (f) Requires a manual reset following any interlock shutdown
  (g) Prohibits the simultaneous light-off of both fuels
  (h) Provides detector(s) to supervise any of the following conditions:
    i. Igniter flame as permitted by igniter class
    ii. Gas firing
    iii. Oil firing
    iv. Combined gas and oil firing
  (i) Burner flame detectors shall be permitted to supervise multiple fuels.

5.7.3 Simultaneous Firing of Oil and Gas for Fuel Transfer Only (Automated Transfer). This subsection shall define the requirements and procedures to be used for an automated transfer of operation from one fuel to a second fuel without requiring a shutdown of the burner.

5.7.3.1 Required Equipment. Equipment requirements shall be in accordance with 5.7.2 and 5.7.3.1.1 through 5.7.3.1.3.

5.7.3.1.1 The combustion control system shall have the capability to automatically increase the airflow by a preset value in response to a fuel transfer signal.

5.7.3.1.2 The airflow shall be held in a fixed position for the transfer period.

5.7.3.1.3 The fuel transfer mode shall have the capability to signal the combustion control system to increase airflow and open the safety shutoff valve(s) of the fuel being introduced.

Copyright 2014 National Fire Protection Association (NFPA). Licensed, by agreement, for individual use and download on October 4, 2014 to LEADER and READER for designated user PATTARAPORN SRITRAKOOL. No other reproduction or transmission in any form permitted without written permission of NFPA. For inquires or to report unauthorized use, contact licensing@nfpa.org.

5.7.3.2 Subsequent Fuel Light-Off — Oil. When oil is introduced as the second fuel, the transfer cycle from gas to oil shall be in the following order:

(1) Satisfy oil fuel system interlocks.
(2) Install an oil atomizer.
(3) Open the atomizing medium shutoff valve.
(4) Select dual fuel firing.
(5) Set the gas-firing rate to light-off flow.
(6) Set the oil control valve in the light-off position.
(7) Prove fuel gas and fuel oil control valves are in light-off position.
(8) Gradually increase airflow by a preset amount corresponding to fuel input of fuel oil in light-off.
(9) Establish ignition energy in accordance with the manufacturer's instructions. Where an igniter is required, see 5.5.2.6.2.2 or 5.5.2.6.2.3 for operating requirements.
(10) Open the oil safety shutoff valves and establish oil flow to the burner.
(11) Verify stable flame and that the air-fuel ratio is within design limits.
(12) Select the oil firing mode, which automatically trips the gas safety shutoff valves.
(13) Gradually remove airflow increase.
(14) Return the combustion control system and burner firing rate to automatic operation.
(15) Shut down igniter as required.

5.7.3.3 Subsequent Fuel Light-Off — Gas. When gas is introduced as the second fuel, the transfer cycle from oil to gas shall be in the following order:

(1) Establish the gas fuel system to satisfy interlocks.
(2) Select the dual fuel firing mode.
(3) Set the oil-firing rate to light-off flow.
(4) Set the gas control valve to the light-off position.
(5) Prove fuel gas and fuel oil control valves are in light-off position.
(6) Increase airflow by a preset amount corresponding to fuel input of fuel gas in light-off.
(7) Establish ignition energy in accordance with the manufacturer's instructions. Where an igniter is required, see 5.5.2.6.2.2 or 5.5.2.6.2.3 for operating requirements.
(8) Close the vent valve (where used), open the gas safety shutoff valves, and establish gas flow to the burner.
(9) Verify stable flame and that the air-fuel ratio is within design limits.
(10) Select the gas-firing mode, which automatically trips the oil safety shutoff valves.
(11) Gradually remove airflow increase.
(12) Return the combustion control system and burner-firing rate to automatic operation.
(13) Purge the oil gun into furnace, if required.
(14) Close atomizing medium shutoff valve, if required.
(15) Remove oil atomizer, if required.
(16) Shut down igniter as required.

5.7.4 Simultaneous Firing of Oil and Gas for Fuel Transfer Only (Manual Transfer). This subsection shall define the requirements and procedures to be used for a manual transfer of operation from one fuel to a second fuel without requiring a shutdown of the burner.

5.7.4.1 Required Equipment. Equipment requirements shall be in accordance with 5.7.2 and 5.7.4.1.1 through 5.7.4.1.3.

5.7.4.1.1 The combustion control system shall have the capability to manually adjust the airflow.

5.7.4.1.2 Manual shutoff valves shall be provided at the burner, downstream of the safety shutoff valves for each fuel.

5.7.4.1.3 A pressure gauge shall be provided in each fuel line downstream of the manual shutoff valve.

5.7.4.2 Subsequent Fuel Light-Off — Oil. When oil is introduced as the second fuel, the procedure to transfer from gas to oil shall be as follows:

(1) Where a Class 1 or Class 2 igniter is available, place it in service in accordance with the manufacturer's instructions as required.
(2) Confirm that the manual oil valve at the burner is closed.
(3) Satisfy oil fuel system interlocks.
(4) Install an oil atomizer.
(5) Open the atomizing medium shutoff valve.
(6) Place the combustion control system in manual mode.
(7) Reduce the gas-firing rate to light-off flow.
(8) Place the oil control valve in the light-off position.
(9) Place the fuel transfer in oil/gas mode, with the following results:
    (a) When the oil safety interlocks are satisfied, the oil safety shutoff valves open.
    (b) Fuel oil pressure now will be upstream of the manual oil valve at the burner.
(10) Slowly close the manual gas shutoff valve while observing the gas pressure downstream of the valve until the gas pressure starts to drop. At this point, the gas flow rate is controlled by the manual valve instead of by the control valve.
(11) Slowly close the manual gas valve while simultaneously opening the manual oil valve to light the oil flame from the gas flame and proceed as follows:
    (a) Continue to increase the oil-firing rate while cutting back on the gas-firing rate to maintain a constant heat input of the combined fuels to the burner, until the manual gas valve is closed and the manual oil valve is fully open.
    (b) Excess air must be maintained at all times by continuously observing the burner flame or by observing the air-fuel ratio, oxygen indicator, or opacity indicator, if provided.
    (c) During this period, airflow must be maintained at a constant rate with only the manual fuel valves operated.
(12) Place the fuel transfer mode in the oil position.
(13) Return the combustion control system and burner-firing rate to automatic operation.
(14) Shut down igniter as required.

5.7.4.3 Subsequent Fuel Light-Off — Gas. When gas is introduced as the second fuel, the procedure to transfer from oil to gas shall be as follows:

(1) Where a Class 1 or Class 2 igniter is available, place it in service in accordance with the manufacturer's instructions.
(2) Confirm that the manual gas valve at the burner is closed.
(3) Satisfy gas fuel system interlocks.
(4) Place the combustion control system in manual mode.
(5) Reduce the oil-firing rate to light-off flow.
(6) Place the gas control valve in the light-off position.
(7) Place fuel transfer in the gas/oil mode, with the following results:
    (a) When the gas safety interlocks are satisfied, the gas safety shutoff valves open.

Copyright 2014 National Fire Protection Association (NFPA). Licensed, by agreement, for individual use and download on October 4, 2014 to LEADER and READER for designated user PATTARAPORN SRITRAKOOL. No other reproduction or transmission in any form permitted without written permission of NFPA. For inquires or to report unauthorized use, contact licensing@nfpa.org.

(b) Gas pressure now will be upstream of manual gas valve at the burner.

(8) Slowly close the manual oil valve while observing the oil pressure downstream of the valve until the oil pressure starts to drop. At this point, the oil flow is controlled by the manual valve instead of by the control valve.

(9) Slowly close the manual oil valve while simultaneously opening the manual gas valve to light the gas flame from the oil flame, then proceed as follows:

(a) Continue to increase the gas-firing rate while cutting back on the oil-firing rate to maintain a constant heat input of the combined fuels to the burner until the manual oil valve is closed and the manual gas valve is fully open.

(b) Excess air must be maintained at all times by continuously observing the burner flame or by observing the air-fuel ratio, oxygen indicator, or opacity indicator, if provided.

(c) During this period, airflow must be maintained at a constant rate with only the manual fuel valves operated.

(10) Place the fuel transfer mode in the gas position. The oil safety shutoff valves close.

(11) Return the combustion control system and burner-firing rate to automatic operation.

(12) Purge the oil gun into the furnace, if required.

(13) Shut off the atomizing medium, if required.

(14) Remove the oil atomizer from burner, if required.

(15) Shut down the igniter as required.

5.7.5 Safety Shutdowns. Safety shutdowns shall be initiated in accordance with 5.6.5.3 through 5.6.5.5.

5.8 Dual Oil Atomizers in a Single Burner.

5.8.1* General. Where a burner is equipped with main and auxiliary oil atomizers for the purpose of changing atomizers for maintenance without affecting the boiler load, the changeover of atomizers shall be carried out manually under stable firing conditions by a trained operator.

5.8.1.1 Class 1 or Class 2 igniters shall be used during the fuel transfer as required by the manufacturer or established by test.

5.8.1.2 Each boiler shall be tested during initial start-up to determine whether any modifications to the procedures specified in Section 5.5 are required to establish ignition or to satisfy other design limitations during light-off, warm-up, or normal operation.

5.8.1.3 The initial prefiring cycle, light-off cycle, and normal shutdown cycles for the initial fuel to be fired and for single fuel operation shall be completed in accordance with Section 5.5.

5.8.2 Required Equipment. The following equipment shall be required:

(1) A burner that is capable of firing two oil atomizers simultaneously during the transfer period

(2) A combustion control system that is capable of limiting the total fuel input to the maximum capacity of the boiler and that has the capability to manually adjust the airflow

(3) A safety interlock system in accordance with 5.3.6 that also prohibits the simultaneous light-off of both atomizers

(4) Manual oil shutoff valves at the burner, downstream of the safety shutoff valves for each atomizer

(5) A pressure gauge in the fuel line downstream of each manual shutoff valve

(6) Manual atomizing media shutoff valves for each atomizer except on mechanically atomized systems

5.8.3 Oil Atomizer Changeover Procedure. The procedures for a manual transfer of operation from one oil atomizer (main or auxiliary) to a second oil atomizer (auxiliary or main) without requiring a shutdown of the burner shall be as follows:

(1) Where a Class 1 or Class 2 igniter is available, place it in service in accordance with the manufacturer's instructions.

(2) Confirm that the manual oil valve at the burner for the atomizer to be started is closed.

(3) Install the second oil atomizer.

(4) Place the combustion control system in manual mode.

(5) Slowly close the manual shutoff valve while observing the oil pressure downstream of the valve until the oil pressure starts to drop. At this point, the oil flow rate is controlled by the manual valve instead of by the control valve.

(6) For nonmechanically atomized oil atomizers, slowly open the second atomizing medium shutoff valve until it is fully open.

(7) Slowly close the manual oil valve for the atomizer in service while simultaneously opening the manual oil valve of the second atomizer to light the second atomizer from the first and proceed as follows:

(a) Continue to slowly increase the oil-firing rate on the second atomizer while cutting back on the firing rate of the first atomizer to maintain a constant heat input of the combined atomizers until the manual valve of the first atomizer is closed and the manual oil valve of the second atomizer is fully open.

(b) Excess air shall be maintained at all times by continuous observation of the burner flame or by observation of the air-fuel ratio, oxygen indicator, or opacity indicator, if provided.

(c) During this period, airflow must be maintained at a constant rate with only the manual fuel valves operated.

(8) Close the atomizing media shutoff valve on the first atomizer, if present.

(9) Return the combustion control system and burner-firing rate to automatic operation.

(10) Shut down the igniter as required.

Chapter 6 Multiple Burner Boilers

6.1 Application.

6.1.1 This chapter shall be used in conjunction with Chapter 4 and requires the coordination of operation procedures, control systems, interlocks, and structural design. Where conflicts exist, the requirements of this chapter shall apply.

6.1.2 The sections of this code that are common to all fuels to be burned in a multiple burner boiler shall be used in conjunction with those sections that are applicable to a specific fuel being utilized.

6.1.3 Section 6.5 shall apply to minimizing the risk of negative furnace draft in excess of furnace structural capability.

6.1.4 Section 6.6 shall apply to burner management, combustion control systems, and operating procedures for multiple burner boilers utilizing fuel gas as defined in 3.3.74.

Copyright 2014 National Fire Protection Association (NFPA). Licensed, by agreement, for individual use and download on October 4, 2014 to LEADER and READER for designated user PATTARAPORN SRITRAKOOL. No other reproduction or transmission in any form permitted without written permission of NFPA. For inquires or to report unauthorized use, contact licensing@nfpa.org.

6.1.5 Section 6.7 shall apply to burner management, combustion control systems, and operating procedures for multiple burner boilers utilizing fuel oil as defined in 3.3.73.3.

6.1.6 Section 6.8 shall apply to burner management, combustion control systems, and operating procedures for multiple burner boilers utilizing pulverized coal fuel as defined in 3.3.73.2.1.

6.1.7 This chapter shall also apply to fired flue gas reheaters (duct burners) installed in the flue gas path downstream of a multiple burner boiler furnace.

6.2 Purpose.

6.2.1 The purpose of this chapter shall be to contribute to operating safety and to prevent furnace explosions and implosions in multiple burner boiler installations from the forced draft fan inlet(s) to the stack inlet.

6.2.2 This chapter establishes minimum requirements that shall be followed for the design, installation, operation, and maintenance of multiple burner boilers and their fuel-burning, air supply, and combustion products removal systems.

6.2.3* The user of this chapter shall recognize the complexity of firing fuel with regard to the type of equipment and the characteristics of the fuel.

6.2.4 This chapter shall not eliminate the need for competent engineering judgment.

6.3 Mechanical Equipment Requirements.

6.3.1 General requirements for mechanical equipment shall be in accordance with Sections 4.6 through 4.16.

6.3.2 Forced draft (FD) and induced draft (ID) fans shall include all fans whose purpose is to supply air for combustion or remove products of combustion, including associated booster fans, and exclude fans in the pulverized coal system.

6.3.3 Fuel Gas and Fuel Oil Safety Shutoff Valves.

6.3.3.1 A header safety shutoff valve and individual burner safety shutoff valves shall be provided.

6.3.3.2 Proof of closure shall be provided for all header and burner safety shutoff valves.

6.3.3.3 Multiple burners supplied from a common set of burner safety shutoff valves shall be treated as a single (individual) burner. *(See 6.6.7.1.3 and 6.7.7.1.3 for two-burner units.)*

6.3.3.4 Where fuel gas or fuel oil igniters are provided, a common igniter fuel header safety shutoff valve and individual igniter safety shutoff valves shall also be provided. The igniter header safety shutoff valve shall be dedicated to the igniter subsystem.

6.3.3.5 Multiple igniters supplied from a common set of igniter safety shutoff valves shall be treated as a single (individual) igniter.

6.3.3.6 Proof of closure in accordance with 6.4.2.3.4.5 shall be provided for all individual igniter safety shutoff valves.

6.3.3.7 Burner and igniter safety shutoff valves shall be located as close as practicable to the igniters or burners to minimize the volume of fuel downstream of the valve.

6.4 Burner Management and Combustion Control Requirements. Burner management and combustion control general requirements shall be in accordance with Sections 4.11 through 4.15.

6.4.1* Unattended and Off-Site Operation. Unattended operation, no operator at the operating location(s), or operation of the plant from an off-site operating location shall require a higher level of automation, safety interlocks, and reliability, which are not addressed in this code.

6.4.1.1 In addition to operational and safety analysis, designs for off-site and unattended operations shall include risk analysis and hazard studies and shall be approved by the authority having jurisdiction.

6.4.1.2 Jurisdictional requirements regarding operator attendance shall be met.

6.4.2 Interlock System.

6.4.2.1 General.

6.4.2.1.1 The basic requirements of an interlock system for a unit shall accomplish the following:

(1) Protect personnel from injury
(2) Protect equipment from damage
(3) Protect boiler operation by limiting actions to a prescribed operating sequence or by initiating trip devices when approaching an out-of-range or unstable operating condition

6.4.2.1.2 The interlock system shall comply with Section 4.11.

6.4.2.1.3* The mandatory automatic trips specified in 6.4.2.3 shall be provided.

6.4.2.1.4 Additional automatic trips shall be permitted. *(See 4.1.3 for trip function evaluation requirements.)*

6.4.2.1.5 Fuel-specific interlocks shall be provided for each design basis fuel.

6.4.2.1.6* Operating personnel shall be made aware of the limitations of the interlock system.

6.4.2.2 Functional Requirements.

6.4.2.2.1 The operation of any interlock that causes a trip shall be annunciated.

6.4.2.2.2 The interlock system shall be installed, adjusted, and tested to confirm design function and timing.

6.4.2.2.2.1 The actuation values and time of action of the initiation devices shall be tuned to the furnace and equipment on which they are installed.

6.4.2.2.2.2 After adjustment, each path and the complete system shall be tested to verify the adjustments.

6.4.2.2.3 Testing and maintenance shall be performed to keep the interlock system functioning as designed.

6.4.2.2.4 If a reburn system is employed, the reburn interlocks shall be integrated with the interlock system.

6.4.2.2.5 Interlocks associated exclusively with the reburn system shall trip only the reburn system and shall not generate a master fuel trip.

6.4.2.2.6 The starting procedure and operation shall be supervised to ensure that design operating parameters and sequences are used.

Copyright 2014 National Fire Protection Association (NFPA). Licensed, by agreement, for individual use and download on October 4, 2014 to LEADER and READER for designated user PATTARAPORN SRITRAKOOL. No other reproduction or transmission in any form permitted without written permission of NFPA. For inquires or to report unauthorized use, contact licensing@nfpa.org.

6.4.2.2.7 The minimum amount of equipment shall be tripped in the correct sequence when the safety of personnel or equipment is jeopardized.

6.4.2.2.8 The initiating cause of the trip shall be indicated, and no portion of the process shall be started until stable operating conditions within design parameters are established.

6.4.2.2.9 The necessary trip devices shall be coordinated into an integrated system.

6.4.2.2.10 Where automatic equipment is not installed or in service to accomplish the intended function, instrumentation or alternative means to enable the operator to complete the operating sequence shall be provided.

6.4.2.2.11 The design shall retain as much flexibility with respect to alternative modes of operation as is consistent with operating procedures and parameters.

6.4.2.2.12 The capability for preventive maintenance shall be provided.

6.4.2.2.13 The design shall not require any deliberate "defeating" of an interlock to start or operate equipment. Whenever a required interlock device is removed temporarily from service, it shall be noted in the log and annunciated. Other means shall be substituted to supervise this interlock function.

6.4.2.2.14 The mandatory master fuel trip–sensing elements and circuits shall be independent of all other control elements and circuits.

Exception No. 1: Individual burner flame detectors also shall be permitted to be used for initiating master fuel trip systems.

Exception No. 2: Airflow measurement, auctioneered furnace draft, and drum water level signals from the boiler control system shall be permitted to be used for a master fuel trip, provided all the following conditions are met:

(1) These interlocks are hardwired into the burner management system.
(2) Tripping set points are protected from unauthorized changes.
(3) Any single component failure of these sensing elements and circuits does not prevent a mandatory master fuel trip.

6.4.2.2.15 Misoperation of the interlock system due to an interruption or restoration of the interlock energy supply shall be prevented.

6.4.2.3 Required Interlocks.

6.4.2.3.1* Interlock System. Figure 6.4.2.3.1 and Table 6.4.2.3.1(a) through Table 6.4.2.3.1(c) show the minimum required system of interlocks that shall be provided for basic furnace protection for a multiple burner boiler operated in accordance with this code.

6.4.2.3.2 Each source of operation of the master fuel trip relay shall actuate a cause-of-trip indication, which informs the operator of the initiating cause of the tripping impulse.

6.4.2.3.3 Main fuel oil–recirculating valves shall be permitted to be reset separately and opened following a trip of the master fuel trip relay only after all burner safety shutoff valves have been proven closed.

6.4.2.3.4 Purge Requirements.

6.4.2.3.4.1 A boiler enclosure purge shall be performed as part of the open register, continuous purge light-off procedures specified in 6.6.5.1.5.7, 6.7.5.1.5.7, and 6.8.5.1.5.7.

6.4.2.3.4.2 A boiler enclosure purge shall be completed before resetting of the master fuel trip relay shall be permitted.

6.4.2.3.4.3 A boiler enclosure purge shall be required after the occurrence of a master fuel trip or if any purge permissive, as defined in 6.4.2.3.4.5, is lost prior to the introduction of any fuel or ignition source to the boiler enclosure.

(A) On a normal shutdown, after all fuel has been removed from service, boiler enclosure purge conditions, including purge rate air flow, shall be established and a boiler enclosure purge completed.

(B)* On an emergency shutdown where FD and ID fans remain in service, boiler enclosure purge conditions shall be established and a boiler enclosure purge completed. Purge rate airflow shall be established in accordance with the following procedure:

(1) All fans in the combustion air and flue gas streams that are in service at the time of the trip shall be left in service. This shall not include primary air fans or pulverizer exhausters used to convey coal into the furnace.
(2) The airflow shall not be changed by deliberate manual or automatic control action except as permitted in 6.4.2.3.4.3(3) and 6.4.2.3.4.3(4).
(3) If the airflow is greater than the purge rate, it shall be permitted to be decreased gradually to the purge rate for a boiler enclosure purge.
(4) If the airflow is less than the purge rate at the time of the trip, it shall be continued at the existing rate for 5 minutes and then increased gradually to the purge rate airflow and held at that value for a boiler enclosure purge. If increasing the airflow to the purge rate requires starting fans, they shall be started in accordance with Section 6.5.
(5) During a master fuel trip event, the overfire air system shall remain at the same setting as when the event occurred for such time as the main combustion airflow is held.
(6) Following the hold period, the overfire air shall be permitted to be gradually adjusted to overfire air purge settings or cooling flows either manually or automatically.

(C)* All Fan Trip.

(1) On an emergency shutdown where no fans remain in service, no action shall be taken other than damper actions necessary to prevent positive or negative furnace pressure transients beyond design limits.
(2) Once the FD and ID fan(s) have stopped, slowly open all dampers in the air and flue gas passages to the full open position.
(3) This condition shall be maintained for an all fan trip hold period of at least 15 minutes prior to allowing any ID or FD fan to be restarted.
(4) At the end of this 15 minute period, the fan(s) shall be started in accordance with Section 6.5.
(5) The airflow shall be increased gradually to the purge rate, and a boiler enclosure purge shall be completed.

(D) After completion of the boiler enclosure purge, the unit shall be permitted to either:

(1) Shut down, closing the burner air registers and shutting down the FD and ID fans; however, maintaining airflow through the unit to prevent accumulation of combustible gases is a prudent procedural step due to the potential of fuel leak-by.
(2) Relight in accordance with 6.6.5, 6.7.5, or 6.8.5, as applicable, depending on the fuels being fired.

Copyright 2014 National Fire Protection Association (NFPA). Licensed, by agreement, for individual use and download on October 4, 2014 to LEADER and READER for designated user PATTARAPORN SRITRAKOOL. No other reproduction or transmission in any form permitted without written permission of NFPA. For inquires or to report unauthorized use, contact licensing@nfpa.org.

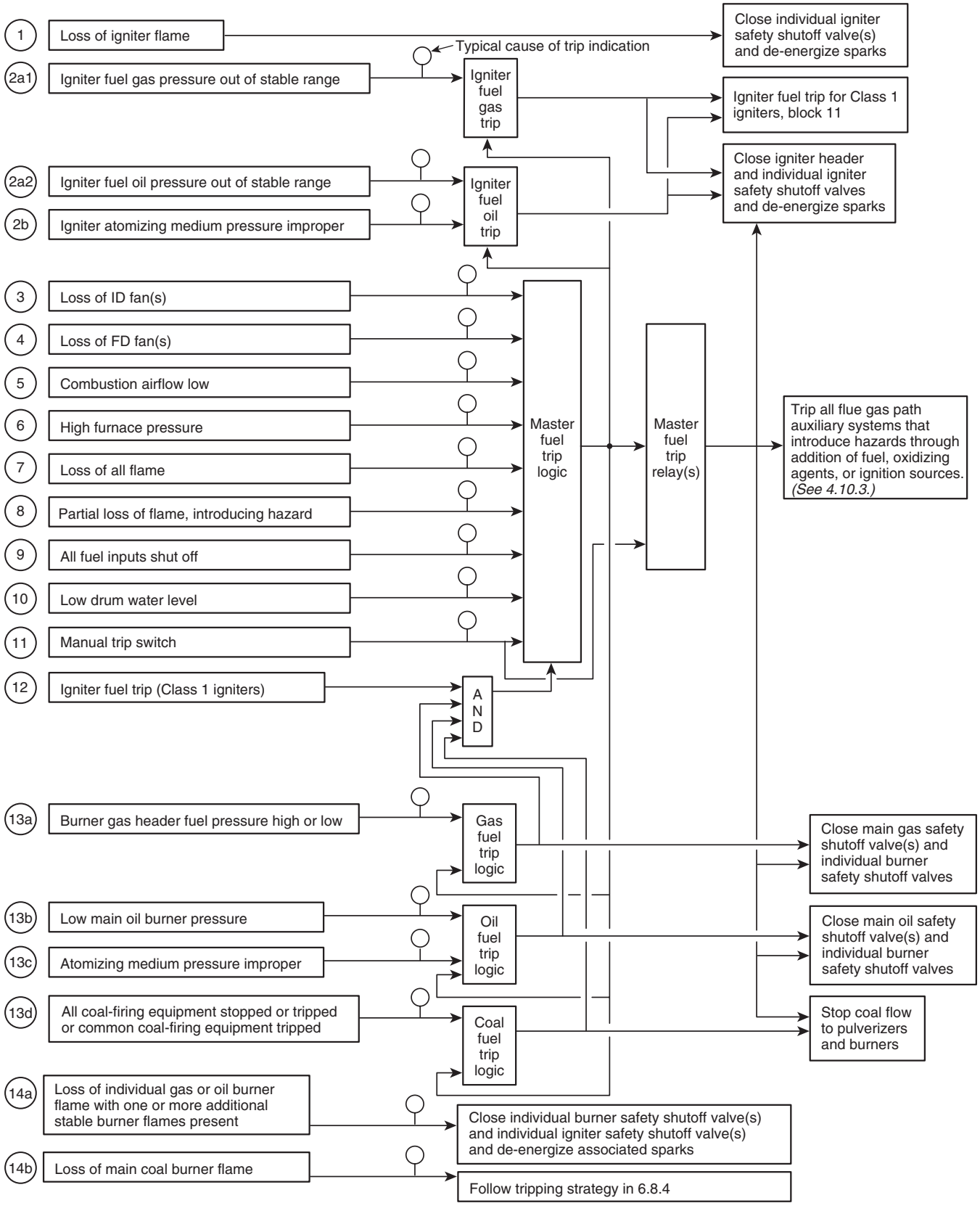

FIGURE 6.4.2.3.1 Interlock System for Multiple Burner Boiler.

Copyright 2014 National Fire Protection Association (NFPA). Licensed, by agreement, for individual use and download on October 4, 2014 to LEADER and READER for designated user PATTARAPORN SRITRAKOOL. No other reproduction or transmission in any form permitted without written permission of NFPA. For inquires or to report unauthorized use, contact licensing@nfpa.org.

Table 6.4.2.3.1(a) Interlock System for Multiple Burner Boiler

Block Number	Action
Block 1	Loss of an individual igniter flame shall cause the following actions: (1) Close the individual igniter safety shutoff valve(s) and de-energize the spark(s). (2) Open the vent valve (fuel gas ignition only). (3) Signal the main flame protection system that the igniter flame has been lost.
Block 2a1	High or low igniter fuel gas header pressure shall be interlocked to initiate the tripping of the igniter header and individual igniter safety shutoff valves and de-energize sparks.
Block 2a2	Low igniter fuel oil header pressure shall be interlocked to initiate the tripping of the igniter header and individual igniter safety shutoff valves and de-energize sparks.
Block 2b	Where fuel oil is used for ignition fuel with air or steam atomization, atomizing air or steam pressure out of range shall trip the igniter and individual igniter safety shutoff valves and de-energize sparks. Where direct electric igniters are used, blocks 1 and 2 shall not apply. However, the master fuel trip system shall de-energize sparks and prevent re-energizing until all conditions for light-off have been re-established.
Blocks 3 through 13	These blocks represent conditions that initiate the tripping of all main and ignition fuel supplies through a master fuel trip relay contact(s). The master fuel trip relay(s) shall be of the type that stays tripped until the unit purge system interlock permits it to be reset. Whenever the master fuel trip relay(s) is operated, it shall trip all fuel header, burner, and igniter safety shutoff valves and de-energize all sparks and all ignition devices within the unit and flue gas path through master fuel trip relay contact(s). Master fuel trip relay contacts shall also trip the fuel oil system circulating and recirculating valves. If the design of the fuel oil supply system is such that backflow of fuel oil through the recirculating valve is inherently impossible or positively prevented, this valve shall be permitted to be manually operated and shall not be required to be interlocked to close automatically on a master fuel trip. The master fuel trip relay contacts shall also trip primary air fans or exhausters, coal feeders, pulverizers, and coal burner line shutoff valves, or take equivalent functional action to stop coal delivery to burners. The master fuel trip logic shall trip all fuel gas path auxiliary systems that introduce hazards through the addition of fuel, oxidizing agents, or ignition sources.
Block 3	The loss of all induced draft fans shall activate the master fuel trip relay.
Block 4	The loss of all forced draft fans shall activate the master fuel trip relay.
Block 5	Low combustion airflow below the permitted limits shall activate the master fuel trip relay.
Block 6	High furnace pressure, such as that resulting from a tube rupture or damper failure, shall activate the master fuel trip relay.
Block 7	Loss of all flame in the furnace shall activate the master fuel trip relay.
Block 8 *(See A.6.4.2.3.1.)*	A partial loss of flame that results in a hazardous condition shall activate the master fuel trip relay.
Block 9 *(See A.6.4.2.3.1.)*	When all fuel inputs to the furnace are shut off following a shutdown of the boiler for any reason, the master fuel trip relay shall be activated in accordance with Table 6.4.2.3.1(b) or Table 6.4.2.3.1(c).
Block 10 *(See A.6.4.2.3.1)*	For drum-type boilers, a low drum water level shall activate the master fuel trip relay.
Block 11	A manual switch that actuates the master fuel trip relay directly shall be provided for use by the operator in an emergency.
Block 12	The igniter fuel trip shall activate the master fuel trip relay in accordance with Table 6.4.2.3.1(b) or Table 6.4.2.3.1(c), if igniter fuel is the only fuel in service or if it is being used to stabilize a main fuel.

(continues)

Copyright 2014 National Fire Protection Association (NFPA). Licensed, by agreement, for individual use and download on October 4, 2014 to LEADER and READER for designated user PATTARAPORN SRITRAKOOL. No other reproduction or transmission in any form permitted without written permission of NFPA. For inquires or to report unauthorized use, contact licensing@nfpa.org.

Table 6.4.2.3.1(a) *Continued*

Block Number	Action
Block 13a	When the fuel gas burner header fuel pressure is above the maximum or below the minimum for a stable flame, that fuel shall be tripped. If fuel gas is the only fuel in service, the master fuel trip relay shall be actuated.
Block 13b	When the fuel oil burner header fuel pressure is below the minimum for a stable flame, that fuel shall be tripped. If fuel oil is the only fuel in service, the master fuel trip relay shall be actuated.
Block 13c	This block represents operation of the fuel oil trip to prevent operation when atomizing air or steam pressure is out of range. If fuel oil is the only fuel in service, the master fuel trip relay shall be actuated.
Block 13d	This block represents the tripping/shutdown of coal-firing equipment that will cause a coal fuel trip. If coal is the only fuel in service, the master fuel trip relay shall be actuated.
Block 14a	Loss of flame at an individual fuel gas or fuel oil burner with one or more additional burners operating with stable flames that does not introduce a serious enough condition to warrant a master fuel trip as called for in block 8 shall close the individual burner safety shutoff valve(s) and associated igniter safety shutoff valve(s) and de-energize the associated igniter spark. For gang-operated burner valves, the requirements of 6.6.5.2.1.3(B)(19) and 6.7.5.2.1.3(B)(19) shall be met.
Block 14b	On loss of main coal burner flame, the tripping strategies of 6.8.4 shall be followed.

Table 6.4.2.3.1(b) Fuel Inputs Shutoff When Class 1 Igniters Are Used

Condition	Action Required
(1) First Class 1 igniter(s) fails to light after successful unit purge. *[See 6.6.5.2.1.3(B)(9), 6.7.5.2.1.3(B)(10), and 6.8.5.2.1.3(B)(7).]*	(1) Igniter valve(s) shall be closed immediately. Master fuel trip not required, but a 1-minute delay shall be required before retrial of that or any other igniter.
(2) Any igniters proven on, all other fuel sources off, all igniter valves subsequently closed.	(2) Master fuel trip shall be actuated.
(3) Any Class 1 igniter(s) proven on, any burner valve leaves closed limit, all burner valves subsequently closed, no other main fuel in service, igniter(s) remain proven.	(3) Associated main fuel gas trip valve and/or fuel oil trip valve shall be closed (fuel gas trip and/or fuel oil trip), proven igniters shall be permitted to remain in service.
(4) Any Class 1 igniter(s) proven on, any pulverizer startup initiated, all pulverizers subsequently stopped, no other main fuel in service, igniter(s) remain proven.	(4) Proven igniters shall be permitted to remain in service.
(5) All igniter and burner valves closed and all feeders or pulverizers stopped.	(5) Master fuel trip shall be actuated.

Copyright 2014 National Fire Protection Association (NFPA). Licensed, by agreement, for individual use and download on October 4, 2014 to LEADER and READER for designated user PATTARAPORN SRITRAKOOL. No other reproduction or transmission in any form permitted without written permission of NFPA. For inquires or to report unauthorized use, contact licensing@nfpa.org.

Table 6.4.2.3.1(c) Fuel Inputs Shutoff When Class 2 or Class 3 Igniters Are Used

Condition	Action Required
(1) First Class 2 or 3 igniter(s) fails to light after successful unit purge. *[See 6.6.5.2.1.3(B)(9), 6.7.5.2.1.3(B)(10), and 6.8.5.2.1.3(B)(7).]*	(1) Igniter valve(s) shall be closed immediately. Master fuel trip not required, but a 1-minute delay shall be required before retrial of that or any other igniter.
(2) Any igniters proven on, all other fuel sources off, all igniter valves subsequently closed.	(2) Master fuel trip shall be actuated.
(3a.1) Class 2 igniter(s) proven on, first main burner trial for ignition fails.	(3a.1) Master fuel trip shall be actuated.
(3a.2) Class 2 igniter(s) proven on, last main burner is taken out of service in a normal shutdown.	(3a.2) Associated main fuel gas trip valve and/or fuel oil trip valve shall be closed (fuel gas trip and/or fuel oil trip), proven igniters shall be permitted to remain in service.
(3a.3) Class 2 igniter(s) proven on, last main burner is taken out of service in an abnormal shutdown.	(3a.3) Master fuel trip shall be actuated.
(3b.1) Class 3 igniters proven on, first main burner trial for ignition fails.	(3b.1) Master fuel trip shall be actuated.
(3b.2) Class 3 igniter(s) proven on, last main burner is taken out of service in a normal shutdown.	(3b.2) Master fuel trip shall be actuated.
(3b.3) Class 3 igniter(s) proven on, last main burner is taken out of service in an abnormal shutdown.	(3b.3) Master fuel trip shall be actuated.
(4) Any Class 2 igniter(s) proven on, any pulverizer startup initiated, all pulverizers subsequently stopped, no other main fuel in service, igniter(s) remain proven.	(4) (a) If first pulverizer fails to ignite as described in 6.8.5.2.1.3(B)(12), master fuel trip shall be actuated. (b) If last pulverizer in service is tripped, master fuel trip shall be actuated. (c) If last pulverizer in service is taken out of service in a normal shutdown sequence by an operator, proven igniters shall be permitted to remain in service.
(5) All igniter and burner valves closed and all feeders or pulverizers stopped.	(5) Master fuel trip shall be actuated.

Copyright 2014 National Fire Protection Association (NFPA). Licensed, by agreement, for individual use and download on October 4, 2014 to LEADER and READER for designated user PATTARAPORN SRITRAKOOL. No other reproduction or transmission in any form permitted without written permission of NFPA. For inquires or to report unauthorized use, contact licensing@nfpa.org.

6.4.2.3.4.4 Purge Rate Air Flow.

(A)* The designer shall establish a minimum purge rate airflow. This purge rate airflow shall be in accordance with 6.4.2.3.4.4(B) and 6.4.2.3.4.4(C).

(B)* Purge rate airflow shall not be less than 25 percent of design full load mass airflow.

(C) Purge rate airflow shall not be greater than 40 percent of design full load mass airflow for coal-fired units.

(D) Purge rate airflow shall be maintained from the FD fan inlet through the stack.

(E) Purge rate airflow shall be maintained from purge completion through light-off and initial loading as described in 6.6.5.1.5, 6.7.5.1.5, and 6.8.5.1.5.

6.4.2.3.4.5* Boiler Enclosure Purge Permissives. Boiler enclosure purge permissives shall, at a minimum, include the following:

(1) All igniter header and individual igniter shutoff valves are proven closed by valve position.

Exception: Where the igniter capacity is 1.5 MW_t (5 million Btu/hr) or less, proof of closure of individual igniter safety shutoff valves by means other than valve position shall be permitted.

(2) If coal is fired on the unit, all pulverizers are stopped and all coal flow to the furnace is stopped.
(3) If fuel gas is fired on the unit, all main fuel gas header and individual fuel gas burner shutoff valves are proven closed by valve position.
(4) If fuel oil is fired on the unit, all main fuel oil header and individual fuel oil burner shutoff valves are proven closed by valve position.
(5) Any other sources of combustibles that could enter the boiler enclosure or flue gas path are proven closed by valve position or other positive means.

Exception: Where the capacity of the combustible source is 1.5 MW_t (5 million Btu/hr) or less, proof of closure of shutoff valves by means other than valve position shall be permitted.

(6) All required burner air registers are in purge position.
(7) At least one FD fan and, if so equipped, one ID fan are in service.
(8) Flue gas recirculation fans shall be operated as recommended by the boiler manufacturer.
(9) Total boiler airflow is at purge rate airflow.

6.4.2.3.4.6* Component Purge Permissives. Component purge permissives shall, at a minimum, include the following:

(1) All sources of fuel and other combustibles into the component proven closed by valve position or other positive means
(2)*All sources of ignition energy proven off
(3) Component purge flow rate at or above boiler enclosure purge rate airflow

6.4.2.3.4.7* Boiler Enclosure Purge.

(A)* Completion of the boiler enclosure purge shall require a minimum of 5 minutes and at least five volume changes of the boiler enclosure while all the purge permissives are maintained.

(B) Accumulation of purge time and volume changes shall be permitted as soon as all the purge permissives are satisfied.

(C) Loss of any of the purge permissives during a boiler enclosure purge shall cancel any purge time and volume changes that have accumulated.

(D) Completion of boiler enclosure purge shall be indicated.

(E) After the boiler enclosure purge is complete, the master fuel trip relay(s) shall be permitted to be reset.

6.4.2.3.4.8* Component Purge.

(A) Prior to being placed in operation, all flue gas path components from the boiler enclosure to the stack inlet (e.g., precipitators, fired reheaters) containing sources of ignition energy shall be purged for a minimum of 5 minutes and at least five volume changes of the component while all the component purge permissives are maintained.

(B) Components shall be purged with air or, after the unit is in service, with flue gas or inert gas that will not support combustion.

(C)* Purging of these components shall be permitted to be performed concurrently with the boiler enclosure purge.

(D) Accumulation of purge time and volume changes shall be permitted as soon as all the component purge permissives are satisfied.

(E) Loss of any of the purge permissives during a component purge shall cancel any purge time and volume changes that have accumulated.

(F) After the component purge is complete, the component shall be permitted to be reset.

6.4.2.3.5 Reserved.

6.4.2.3.6 Loss of ID Fan Interlocks.

6.4.2.3.6.1* An interlock to prove that each ID fan is running and capable of providing the required flow shall be provided. Loss of such proofs shall initiate loss of ID fan interlocks.

6.4.2.3.6.2 Associated damper(s) shall be closed on loss of an individual ID fan, unless it is the last ID fan in service.

6.4.2.3.6.3 Where an interlock system is provided to start, stop, and trip ID fans and FD fans in pairs, the associated FD fan shall be tripped on loss of an individual ID fan, and the dampers associated with both fans shall be closed, provided they are not the last fans in service. If they are the last fans in service, the dampers associated with both fans shall remain open.

6.4.2.3.6.4 On loss of all ID fans, all FD fans shall be tripped. All ID fan dampers shall be opened after a time delay to minimize high draft during fan coastdown. Dampers shall remain open and fans shall be started in accordance with 6.5.3.2 through 6.5.3.3.4. Flue gas recirculation fan system dampers shall be closed.

6.4.2.3.6.5* The master fuel trip (not necessarily automatic) shall be activated when the furnace negative pressure exceeds the value recommended by the manufacturer. If fans are operating after the trip, they shall be continued in service. The airflow shall not be increased by deliberate manual or automatic control actions.

6.4.2.3.6.6 Before the main fuel firing and following a master fuel trip, all ID fans shall be tripped if furnace negative pressure exceeds the value recommended by the manufacturer. A short time delay shall be permitted to allow for the negative

Copyright 2014 National Fire Protection Association (NFPA). Licensed, by agreement, for individual use and download on October 4, 2014 to LEADER and READER for designated user PATTARAPORN SRITRAKOOL. No other reproduction or transmission in any form permitted without written permission of NFPA. For inquires or to report unauthorized use, contact licensing@nfpa.org.

pressure transients due to loss of the main flame. The value of the negative pressure at which this trip is activated shall be greater than that specified in 6.4.2.3.6.5.

6.4.2.3.7 Loss of FD Fan Interlocks.

6.4.2.3.7.1* An interlock to prove that each FD fan is running and capable of providing the required flow shall be provided. Loss of such proofs shall initiate loss of FD fan interlocks.

6.4.2.3.7.2 Associated damper(s) shall be closed on loss of an individual FD fan, unless it is the last FD fan in service.

6.4.2.3.7.3 Where an interlock system is provided to start, stop, and trip ID fans and FD fans in pairs, the associated ID fan shall be tripped on loss of an individual FD fan, and the dampers associated with both fans shall be closed, provided they are not the last fans in service. If they are the last fans in service, the ID fan shall remain in controlled operation, and the dampers associated with the FD fan shall remain open.

6.4.2.3.7.4 On loss of all FD fans, all FD fan dampers shall be opened after a time delay to minimize high duct pressure during fan coastdown. Dampers shall remain open. Flue gas recirculation fan system dampers shall be closed.

6.4.2.3.7.5* The master fuel trip shall be activated when the furnace pressure exceeds the maximum pressure value recommended by the manufacturer. If fans are operating after the trip, they shall be continued in service. The airflow shall not be increased by deliberate manual or automatic control actions.

6.4.2.3.7.6* Before main fuel firing and following a 5-minute period after a master fuel trip (furnace postpurge), FD fans shall be tripped if the furnace pressure exceeds the maximum pressure value recommended by the manufacturer.

6.4.2.3.8 Multiple and Variable-Speed Fan Interlocks. On start of the second fan and subsequent fan(s), whether the FD or ID type, the fan shall be capable of delivering airflow before opening its damper(s).

6.4.2.3.9 Trips and Interlocks for Individual Pulverizer Subsystem on Direct-Fired Furnaces.

6.4.2.3.9.1 Mandatory Automatic Pulverizer Subsystem Trips. A direct-fired pulverized coal system shall be interlocked so that trips are initiated in accordance with the following conditions:

(1) Failure of the primary air fan or exhauster shall trip the coal burner shutoff valve, or equivalent, and feeder. The manufacturer's requirements regarding pulverizer tripping shall apply.
(2) Failure of the pulverizer shall trip the feeder and primary airflow.
(3) Failure of the feeder shall initiate an alarm, and restarting shall be blocked until feeder start-up conditions are re-established.

6.4.2.3.9.2 Mandatory Pulverizer Subsystem Trips — Not Necessarily Automatically Initiated. A direct-fired pulverized coal system trip shall result from any of the following conditions:

(1) Loss of igniters or ignition energy less than required to safely ignite the associated coal burners during the start-up of a pulverizer shall trip that pulverizer subsystem.
(2) Loss of individual coal burner flame shall trip that burner or its pulverizer subsystem. *(See 6.8.5.2.2.8.)*
(3)* Loss of coal feed to the burners of a pulverizer subsystem shall trip the feeder. Feeder tripping shall not be required if the associated Class 1 igniters are in operation.

6.4.2.3.9.3 Mandatory Sequential Starting Interlocks. Permissive sequential interlocking shall be arranged so that the pulverizer subsystem is started only in the following sequence:

(1) Igniters for all burners served by the pulverizer are in service and proven.
(2) The primary air fan or exhauster is started.
(3) The pulverizer is started.
(4) The raw coal feeder is started.

6.4.2.3.10 Interlocks and Trips for Reburn Fuel. The following interlocks shall initiate a reburn fuel trip:

(1) Master fuel trip
(2) Operator-actuated manual trip switch
(3) Reburn fuel gas header pressure high or low
(4) Reburn fuel oil header pressure low
(5) Reburn fuel oil atomizing medium pressure outside of specified limits
(6) Failure or low flow of all reburn fuel (coal) transport equipment
(7) Failure of all reburn fuel (coal) feed or preparation equipment
(8)* Boiler load less than the minimum for reburn operation
(9) Overfire airflow, where used, less than the minimum for reburn operation as specified by the reburn system manufacturer
(10) Loss of temperature or loss of flame as specified in 6.6.3.5.2 and 6.6.3.5.3

6.4.2.3.11* Interlocks and Trips for Selective Catalytic Reduction (SCR). The following interlocks shall initiate a trip of or prevent the operation of the ammonia feed to the SCR system:

(1) Master fuel trip
(2) SCR isolated from flue gas stream; for an SCR with isolation and bypass dampers *(See Section 6.9.)*

6.4.2.3.12 Interlocks and Trips for Duct Burners.

6.4.2.3.12.1 The following interlocks shall initiate a duct burner fuel trip:

(1) Master fuel trip
(2) Operator-actuated manual trip switch
(3) Duct burner fuel header pressure out of limits
(4) Augmentation air, where used, less than the minimum for duct burner operation
(5)* Loss of flame at all duct burners
(6) Closure of all individual duct burner safety shutoff valves
(7) Duct burner discharge temperature high

6.4.2.3.12.2 All duct burner header, individual duct burner, and igniter safety shutoff valves shall be proven closed by valve position for the unit purge.

Exception: Where the igniter capacity is 1.5 MW_t (5 million Btu/hr) or less, proof of closure of individual igniter safety shutoff valves by means other than valve position shall be permitted.

6.4.2.3.12.3 Any augmentation air supply system for duct burners in the flue gas path shall be proven in service for the unit purge.

Copyright 2014 National Fire Protection Association (NFPA). Licensed, by agreement, for individual use and download on October 4, 2014 to LEADER and READER for designated user PATTARAPORN SRITRAKOOL. No other reproduction or transmission in any form permitted without written permission of NFPA. For inquires or to report unauthorized use, contact licensing@nfpa.org.

6.4.2.3.13 Interlocks and Trips for Flue Gas Path Auxiliary Systems. The following interlocks shall initiate a trip of or prevent the operation of the respective flue gas path auxiliary systems that introduce hazards through addition of fuel, oxidizing agents, or ignition sources:

(1) Master fuel trip
(2) Required unit operating conditions not met (specific to flue gas path auxiliary system type and application)

6.4.3 Alarm System.

6.4.3.1 Functional Requirements.

6.4.3.1.1* Alarms shall be used to indicate equipment malfunction, hazardous conditions, and misoperation. For the purpose of this code, the primary concern shall be alarms that indicate conditions that pose a threat of impending or immediate hazards.

6.4.3.1.2 Alarm systems shall be designed so that, for the required alarms in 6.4.3.2, the operator receives audible and visual indication of the out-of-limits condition.

6.4.3.1.3 Means shall be permitted to silence the audible alarm after actuation, but the visual indication shall continue until the condition is within acceptable limits.

6.4.3.1.4 Where equipment malfunction makes it necessary to manually defeat an alarm, it shall be performed by authorized personnel, and the alarm shall be tagged as inoperative.

6.4.3.2* Required Alarms. Fuel-specific alarms shall be provided for all design basis fuels, and in addition to the trip alarms in the interlock system shown in Figure 6.4.2.3.1 and Table 6.4.2.3.1(a), the separately annunciated alarms in 6.4.3.2.1 through 6.4.3.2.41 shall be provided.

6.4.3.2.1 Ignition Fuel Gas Header Pressure (High and Low). The ignition fuel gas header pressure shall be monitored as close to the burners as practicable.

6.4.3.2.2 Ignition Fuel Oil Header Pressure (Low). The ignition fuel oil header pressure shall be monitored as close to the burners as practicable.

6.4.3.2.3 Igniter Atomizing Steam or Air Pressure (Low). For steam or air-assisted igniters, an alarm shall be provided to warn that steam or air pressure is outside the operating range and that poor fuel oil atomization is possible.

6.4.3.2.4 Fuel Gas Supply Pressure (High and Low).

6.4.3.2.4.1 The fuel gas pressure supplied to the plant shall be monitored at a point as far upstream of the final constant fuel pressure regulator, main fuel control, and main safety shutoff valves as practicable.

6.4.3.2.4.2 These alarms shall warn the operator of pressure conditions that might result in damage to equipment or indicate a complete loss of fuel gas supply.

6.4.3.2.5 Fuel Gas Meter Pressure (High and Low).

6.4.3.2.5.1 The fuel gas meter pressure shall be monitored at the upstream tap if the fuel gas flowmeter is part of the combustion control system and is not pressure compensated.

6.4.3.2.5.2 These alarms shall warn the operator that significant error is present in the flow signal to the control system.

6.4.3.2.6 Fuel Gas Burner Header Pressure (High and Low). The burner header fuel gas pressure shall be monitored as close to the burners as practicable.

6.4.3.2.7 Main Oil Supply Pressure (Low).

6.4.3.2.7.1 The fuel oil supply pressure shall be monitored at a point as far upstream of the main fuel control and safety shutoff valves as practicable.

6.4.3.2.7.2 This alarm shall warn the operator of pressure conditions that might indicate a complete loss of fuel oil supply.

6.4.3.2.8 Main Fuel Oil Viscosity (High). The main fuel oil temperature shall be monitored to warn that the fuel temperature is dropping and that poor atomization of the fuel oil is possible. *[See A.6.4.3.2(8).]*

6.4.3.2.9 Fuel Oil Burner Header Pressure (Low). The burner header fuel oil pressure shall be monitored as close to the burners as practicable.

6.4.3.2.10 Atomizing Steam or Air Pressure (Low). For steam or air-assisted burners, an alarm shall be provided to warn that the steam or air pressure and fuel oil pressure are outside the operating range and that poor fuel oil atomization is possible.

6.4.3.2.11 Pulverizer Tripped. An alarm shall indicate when the pulverizer is automatically tripped (not intentionally shut down).

6.4.3.2.12 Primary Air Fan Tripped. An alarm shall indicate when the primary air fan is automatically tripped (not intentionally shut down).

6.4.3.2.13 Coal Stoppage to Pulverizer. An alarm shall indicate when the feeder is running and the coal detecting device indicates no coal is flowing or when the feeder is automatically tripped (not intentionally shut down).

6.4.3.2.14 Coal-Air High Temperature. An alarm shall indicate when coal-air temperature within or at the pulverizer outlet exceeds design operating limits. *(See 9.5.4.)*

6.4.3.2.15 Furnace Pressure (High). This pressure shall be measured as close to the furnace pressure tap used for control as practicable.

6.4.3.2.16 Furnace Draft (High). This alarm applies to balanced draft furnace operation, which shall be measured as close to the furnace draft tap used for control as practicable.

6.4.3.2.17 Loss of Operating FD Fan. This condition shall be sensed and alarmed only when the fan is not operating when expected.

6.4.3.2.18 Loss of Operating ID Fan. This alarm applies to balanced draft furnace operation. It shall be sensed and alarmed only when the fan is not operating when expected.

6.4.3.2.19 Furnace Airflow (Low). This condition shall be sensed and alarmed when total airflow falls below the minimum purge rate established by the designer in accordance with 6.4.2.3.4.4(A).

6.4.3.2.20 Loss of Interlock Power.

6.4.3.2.20.1 This condition shall be sensed and alarmed and shall include all sources of power necessary to complete interlock functions.

6.4.3.2.20.2 If more than one source of energy, such as electric power, compressed air, or hydraulics, is needed for an interlock scheme, loss of each source of energy shall be alarmed separately.

Copyright 2014 National Fire Protection Association (NFPA). Licensed, by agreement, for individual use and download on October 4, 2014 to LEADER and READER for designated user PATTARAPORN SRITRAKOOL. No other reproduction or transmission in any form permitted without written permission of NFPA. For inquires or to report unauthorized use, contact licensing@nfpa.org.

6.4.3.2.21 Loss of Control Power. This condition shall be sensed and alarmed to include any sources of power for the control systems.

6.4.3.2.22 Loss of Flame. A partial or total loss of flame envelope still receiving fuel shall be monitored and alarmed.

6.4.3.2.23 Burner Valves Not Closed. The closed position of individual burner safety shutoff valves shall be monitored, and failure of any valve to close following a trip shall be alarmed.

6.4.3.2.24 Drum Water Level (Low). The average water level in the boiler drum shall be monitored and shall alarm when the level in the drum drops to the lowest operating point, as recommended by the manufacturer.

6.4.3.2.25 Initiation of Directional Blocking or Override Action. Initiation of directional blocking or override action within the furnace pressure control system shall be monitored and alarmed.

6.4.3.2.26 Redundant Transmitter Malfunctions. Redundant transmitter malfunctions within the furnace pressure control system shall be monitored and alarmed.

6.4.3.2.27 Axial Flow Fan Nearing Stall Line.

6.4.3.2.28 Reburn Fuel Gas Pressure (High and Low).

6.4.3.2.28.1 This alarm shall apply to units with a reburn system.

6.4.3.2.28.2 The reburn fuel header pressure shall be monitored as close to the burners and injectors as practicable in order to warn the operator of abnormal fuel pressures in advance of trip conditions.

6.4.3.2.29 Failure of Reburn Safety Shutoff Valve to Close.

6.4.3.2.29.1 This alarm shall apply to units with a reburn system.

6.4.3.2.29.2 The closed position of reburn safety shutoff valves shall be monitored, and failure of any valve to close following a trip shall be alarmed.

6.4.3.2.30 Reburn Fuel Oil Supply Pressure Low.

6.4.3.2.31 Reburn Fuel Oil Temperature Low. A low fuel oil temperature alarm shall be provided if the reburn fuel needs to be heated to maintain viscosity for correct atomization.

6.4.3.2.32 Reburn Atomizing Steam or Air Pressure Low. A low differential pressure alarm between the fuel oil and the atomizing medium or a low atomizing pressure alarm shall be provided, depending on the requirements.

6.4.3.2.33 Reburn Fuel (Coal) Transport Flow (Low). This alarm shall apply to units with a reburn system.

6.4.3.2.34 Reburn Fuel (Coal) Transport Temperature (High). This alarm shall apply to units with a reburn system.

6.4.3.2.35 Reburn Fuel (Coal) Preparation System Fault.

6.4.3.2.35.1 This alarm shall apply to units with a reburn system.

6.4.3.2.35.2 Any failure of the fuel preparation equipment that results in reburn fuel preparation outside design specifications shall be alarmed.

6.4.3.2.36 Flue Gas Combustibles (High).

6.4.3.2.36.1 This alarm shall apply to units with a reburn system.

6.4.3.2.36.2 This alarm shall occur when combustible mixtures measured by the analyzer exceed 1 percent by volume of the flue gas.

6.4.3.2.37 Furnace Temperature (Low). This alarm shall apply to units with a reburn system and shall be set as defined in 6.6.3.5.2, 6.7.3.5.2, and 6.8.3.5.2.

6.4.3.2.38 Duct Burner Fuel Header Pressure (High and Low). The duct burner header pressure shall be monitored as close to the duct burners as practicable.

6.4.3.2.39 Failure of Duct Burner Safety Shutoff Valve to Close. The closed position of all duct burner safety shutoff valves shall be monitored, and failure of any valve to close shall be alarmed.

6.4.3.2.40 Duct Burner Igniter Fuel Header Pressure (High and Low). The duct burner igniter header pressure shall be monitored as close to the duct burners as practicable.

6.4.3.2.41 Duct Burner Discharge Temperature (High). This alarm shall indicate when the duct burner outlet temperature exceeds design operating limits.

6.5 Furnace Implosion Protection.

6.5.1* General. The structural design requirements of Section 4.6 shall apply to both pressure fired and balanced-draft units.

6.5.1.1 Transient Design Pressure.

6.5.1.1.1 The furnace structural design shall be such that the furnace is capable of withstanding a transient design pressure without permanent deformation due to yield or buckling of any support member.

6.5.1.1.2 This transient design pressure need not be considered as acting simultaneously with other transient loads such as wind load or seismic load.

6.5.1.2 Pressure Fired Units. Implosion protection requirements shall not apply to units without a fan located in the flue gas path downstream of the boiler enclosure.

6.5.1.3* Balanced Draft Units. All boilers with a fan located in the flue gas path downstream of the boiler enclosure shall be designed in accordance with either 6.5.1.3.1 or 6.5.1.3.2.

6.5.1.3.1 The furnace and flue gas removal system shall be designed so that the maximum head capability of the ID fan system with ambient air does not exceed the continuous design pressure of the furnace, ducts, and associated equipment.

6.5.1.3.2 Where a furnace pressure control system in accordance with 6.5.2 is provided, the furnace shall be designed for the transient design pressures in 6.5.1.3.2.1 and 6.5.1.3.2.2.

6.5.1.3.2.1* Positive Transient Design Pressure.

(A) If the test block capability of the FD fan at ambient temperature is equal to or more positive than +8.7 kPa (+35 in. of water), the positive transient design pressure shall be at least, but shall not be required to exceed, +8.7 kPa (+35 in. of water).

(B) If the test block capability of the FD fan at ambient temperature is less positive than +8.7 kPa (+35 in. of water), the positive transient design pressure shall be at least, but shall not be required to exceed, the test block capability of the FD fan.

Copyright 2014 National Fire Protection Association (NFPA). Licensed, by agreement, for individual use and download on October 4, 2014 to LEADER and READER for designated user PATTARAPORN SRITRAKOOL. No other reproduction or transmission in any form permitted without written permission of NFPA. For inquires or to report unauthorized use, contact licensing@nfpa.org.

6.5.1.3.2.2* Negative Transient Design Pressure.

(A) If the test block capability of the ID fan at ambient temperature is equal to or more negative than –8.7 kPa (–35 in. of water), the negative transient design pressure shall be at least as negative as, but shall not be required to be more negative than, –8.7 kPa (–35 in. of water).

(B) If the test block capability of the ID fan at ambient temperature is less negative than –8.7 kPa (–35 in. of water), for example, –6.72 kPa (–27 in. of water), the negative transient design pressure shall be at least as negative as, but shall not be required to be more negative than, the test block capability of the ID fan.

6.5.2 Furnace Pressure Control Systems (Implosion Protection).

6.5.2.1 Functional Requirements. The furnace pressure control system shall control the furnace pressure at the desired set point in the combustion chamber.

6.5.2.2 System Requirements.

6.5.2.2.1 The furnace pressure control system, as shown in Figure 6.5.2.2.1, shall include the following features and functions:

(1) Three furnace pressure transmitters (A) in an auctioneered median-select system, each on a separate pressure-sensing tap and with suitable monitoring (B) to minimize the possibility of operating with a faulty furnace pressure measurement
(2) A feed-forward signal (C) to the furnace pressure control subsystem (D), representative of boiler airflow demand, which can be permitted to be a fuel flow signal, airflow control equipment demand signal, or other index of demand, but not a measured airflow signal
(3) The furnace pressure control subsystem (D), which positions the furnace pressure regulating equipment so as to maintain furnace pressure at the desired set point
(4)*The furnace pressure control protection subsystem (G), which is applied after the auto/manual transfer station (E) to minimize furnace pressure excursions under both auto and manual operation modes and which includes a feed-forward override action (F) initiated by a master fuel trip in anticipation of a furnace pressure excursion due to flame collapse and works in conjunction with logic that minimizes furnace pressure excursions
(5) Axial fans, where used, operated in their stable range to prevent uncontrollable changes in airflow or flue gas flow

6.5.2.3 Component Requirements. The furnace pressure control element(s) [(H) in Figure 6.5.2.2.1] (fan inlet damper blade pitch control, speed control) shall meet the following criteria:

(1)*The operating speed shall not exceed the control system's sensing and positioning capabilities.
(2) The operating speed of the furnace pressure control equipment shall not be less than that of the airflow control equipment.

6.5.3 Sequence of Operations Requirements. The purpose of sequencing shall be to ensure that the operating events occur in the order required.

6.5.3.1 Fan start-up and shutdown procedures as defined by manufacturers, engineering consultants, and operating companies shall be coordinated with the operating procedures

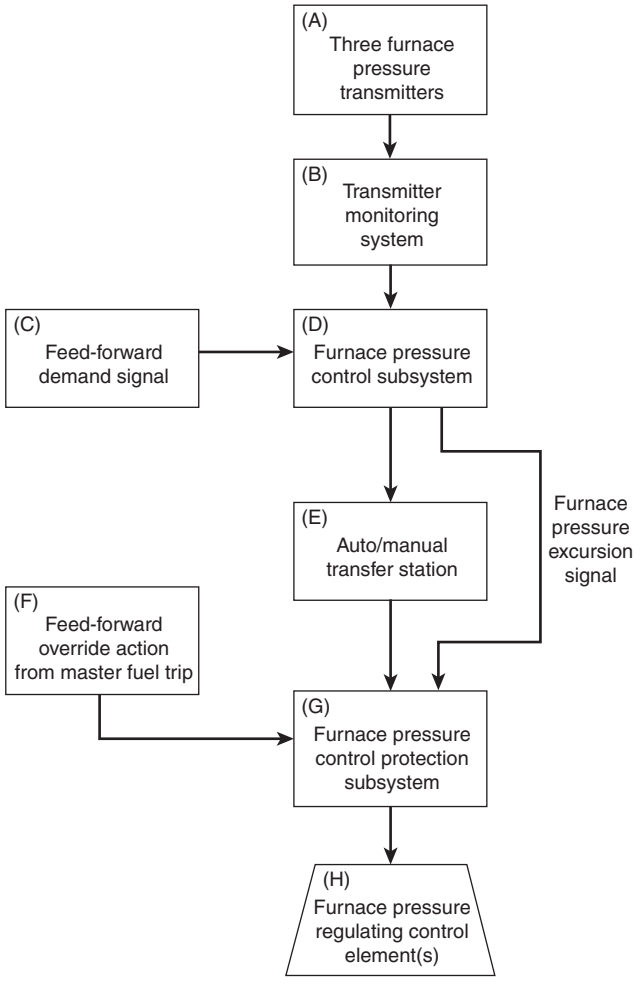

FIGURE 6.5.2.2.1 Furnace Pressure Control Systems Requirements.

specified in this section and in the related sections applicable to the fuel being fired as follows:

(1) Fuel gas-fired systems, Section 6.6
(2) Fuel oil-fired systems, Section 6.7
(3) Pulverized coal–fired systems, Section 6.8

6.5.3.2* Open-Flow Air Path.

6.5.3.2.1 An open-flow air path from the inlet of the FD fans through the stack shall be ensured under all operating conditions.

6.5.3.2.2 Where the system design does not permit the use of fully open air paths, the minimum open area air paths shall be not less than that required for purge airflow requirements with fans in operation.

6.5.3.2.3* Isolating dampers, windbox dampers, air registers, and other control dampers shall be opened as required to ensure an open-flow path from the FD fan inlet through the furnace, the ID fans, and the stack.

6.5.3.2.4 Provision of the open path shall be ensured while starting the first ID fan and the first FD fan.

Copyright 2014 National Fire Protection Association (NFPA). Licensed, by agreement, for individual use and download on October 4, 2014 to LEADER and READER for designated user PATTARAPORN SRITRAKOOL. No other reproduction or transmission in any form permitted without written permission of NFPA. For inquires or to report unauthorized use, contact licensing@nfpa.org.

6.5.3.2.4.1* On installations with multiple ID fans or FD fans, the following shall apply:

(1) Unless an alternative open-flow path is provided, all fan control devices and shutoff dampers shall be opened in preparation for starting the first ID fan except as permitted by 6.4.2.3.4.3(C)(3).
(2)*Within the limitations of the fan manufacturer's recommendations, all flow control devices and shutoff dampers on idle ID fans shall remain open until the first ID fan is in operation and all flow control devices and shutoff dampers on idle FD fans shall remain open until the first FD fan is in operation while maintaining furnace pressure conditions and indication of an open-flow path.

6.5.3.2.4.2 On installations with a single ID fan or FD fan, the following shall apply:

(1) The ID fan's associated control devices and shutoff dampers shall be permitted to be closed as required during the fan's start-up.
(2) The FD fan's associated flow control devices and shutoff dampers shall be brought to the position that limits the starting current for the fan's start-up and then shall be brought to the position for purge airflow during fan operation.

6.5.3.3 Starting and Stopping Fans.

6.5.3.3.1 The sequence for starting and stopping fans under all conditions shall be as follows:

(1) An ID fan shall be started and followed by the start of an FD fan.
(2) Succeeding ID and FD fans shall be started in accordance with 6.5.3.3.2 and 6.5.3.3.4.
(3) Shutdown procedures shall be the reverse of those specified in 6.5.3.3.1(1) and 6.5.3.3.1(2).

6.5.3.3.2 When fans are started and stopped, the methods employed and the manipulation of the associated control elements shall minimize furnace pressure and airflow excursions.

6.5.3.3.3 The practice of operating with excess ID fan capability in relation to either FD fan capability or boiler load shall be prohibited.

6.5.3.3.4 The furnace pressure control subsystem shall be placed and maintained on automatic control as soon as practicable.

6.5.3.3.5 Following shutdown of the last fan due to any cause, the opening of fan dampers shall be delayed or controlled to prevent positive or negative furnace pressure transients in excess of design limits during fan coastdown.

6.5.4 Interlock System Functional Requirements.

6.5.4.1 The functional requirements for interlock systems shall be as specified in 6.4.2.

6.5.4.2 Not all conditions conducive to a furnace implosion are detected by any of the mandatory automatic-trip devices, even though such devices are adjusted and maintained in accordance with the manufacturer's instructions and as required by this standard; therefore, operating personnel shall be made aware of the limitations of the automatic protection system.

6.6 Fuel Gas Systems.

6.6.1 General. The requirements of Section 6.6 shall apply to installations where fuel gas is supplied.

6.6.2 Fuel Gas Firing — Special Problems. In addition to the common hazards involved in the combustion of solid, liquid, and gaseous fuels, the following special hazards related to the physical characteristics of fuel gas shall be addressed in the design of the firing systems:

(1) Fuel gas is colorless; therefore, a leak is not visually detectable. In addition, detection of a fuel gas leak by means of odor is unreliable.
(2) Leakage within buildings creates hazardous conditions, particularly where the fuel gas piping is routed through confined areas.
   (a) Where the fuel gas piping is routed through confined areas, adequate ventilation shall be provided.
   (b) Outdoor boilers tend to minimize confined-area problems.
(3) The nature of fuel gas makes it possible to experience severe departures from design air-fuel ratios without any visible evidence at the burners, furnace, or stack that could escalate into a progressively worsening condition.
   (a) Combustion control systems that respond to reduced boiler steam pressure or steam flow with an impulse for more fuel, unless protected or interlocked to prevent a fuel-rich mixture, are potentially hazardous.
   (b) This hazard also applies to firing with fuel or air on manual without the previously mentioned interlocks or alarms. *(See 6.4.2, 6.6.3, 6.6.4, and 6.6.5, which provide requirements, and Annex D.)*
(4) Special requirements as defined in NFPA 54, *National Fuel Gas Code*, must be taken with wet fuel gas systems.
(5) Widely differing characteristics of fuel gas from either a single source or multiple sources could result in significant change in the heat input rate to the burners without a corresponding change in airflow.
(6) Relief valves and atmospheric vents must discharge into areas away from building ventilation systems, sources of ignition, or other areas where the discharge fuel gases create a hazard.
(7) Fuel gas piping must be purged prior to and after maintenance and repair, as detailed in NFPA 54, *National Fuel Gas Code*.

6.6.3 System Requirements.

6.6.3.1 Fuel Supply Subsystem — Fuel Gas. The requirements in this subsection shall apply to fuel gas supply piping, and all installed piping arrangements shall meet the functional requirements of this code. *[See Figure A.6.6.5.1.5.4(a) and Figure A.6.6.5.1.5.4(b), which show the typical fuel gas piping arrangements on which the text in this code is based.]*

6.6.3.1.1 Equipment Size and Arrangement.

6.6.3.1.1.1 The fuel supply equipment shall be sized to satisfy the design requirements and arranged to ensure a continuous, steady fuel flow over all operating requirements of the unit.

6.6.3.1.1.2 This requirement shall include coordination of the main fuel control valve, burner safety shutoff valves, and associated piping volume to ensure against fuel pressure transients that exceed burner limits for stable flame as a result of placing burners in service or taking them out of service.

6.6.3.1.2 Fuel Gas Supply Overpressure Protection.

6.6.3.1.2.1 The portion of the fuel supply system outside the boiler room shall be arranged to prevent excessive fuel gas

Copyright 2014 National Fire Protection Association (NFPA). Licensed, by agreement, for individual use and download on October 4, 2014 to LEADER and READER for designated user PATTARAPORN SRITRAKOOL. No other reproduction or transmission in any form permitted without written permission of NFPA. For inquires or to report unauthorized use, contact licensing@nfpa.org.

pressure in the fuel-burning system, even in the event of failure of the main supply constant fuel pressure regulator(s).

6.6.3.1.2.2 The requirement in 6.6.3.1.2.1 shall be accomplished by providing full relieving capacity that is vented to a safe location or by providing a high fuel gas pressure trip when full relieving capacity is not installed. *[See Figure A.6.6.5.1.5.4(b), which shows a typical fuel gas supply system outside the boiler room.]*

6.6.3.1.3 A manual emergency fuel shutoff valve that is accessible in the event of an emergency in the boiler area shall be provided.

6.6.3.1.4 Fuel Contamination. The fuel supply equipment shall be designed to inhibit fuel contamination.

6.6.3.1.5 Access to important fuel system components shall be provided.

6.6.3.1.6 Drains shall be provided at low points in the piping.

6.6.3.1.7 The fuel supply equipment shall be capable of continuing uninterrupted fuel flow during anticipated furnace pressure pulsation.

6.6.3.1.8 The fuel supply equipment shall be designed based on the operating environment and ambient conditions.

6.6.3.1.9 Fire and Mechanical Impact. All fuel gas piping, including instrument and control piping, shall be designed to be resistant to severe external conditions such as fire or mechanical damage.

6.6.3.1.10 A double block and vent valve arrangement shall be provided in the fuel line to each burner and each igniter.

6.6.3.1.11 Valve Leak Testing.

6.6.3.1.11.1 Tightness tests of the main safety shutoff valves, individual burner safety shutoff valves, and associated vent valves shall be performed.

6.6.3.1.11.2 Permanent provisions shall be made in the fuel gas piping to allow for making leak tests and subsequent repairs.

6.6.3.1.11.3 Valves added in vent lines for leak testing shall be either continuously monitored and alarmed when in the incorrect position or locked in the open position except when leak testing is being performed.

6.6.3.1.12 The discharge from atmospheric vents and relief valves shall be located so that there is no possibility of the discharged fuel gas being drawn into the air intake, ventilating system, or windows of the boiler room or adjacent buildings and shall be extended above the boiler and adjacent structures so that fuel gas discharge does not present a fire hazard.

6.6.3.1.13 Pressure relief valve vents shall not be manifolded with instrumentation vents (e.g., pressure-regulating valve diaphragms, transmitters, and pressure switches).

6.6.3.1.14 Pressure relief valve vents shall not be manifolded with burner vents, igniter vents, or header vents.

6.6.3.2 Main Burner Subsystem.

6.6.3.2.1* Stable Flame Limits.

6.6.3.2.1.1 The main burner subsystem shall be designed so that the burner inputs are supplied to the furnace continuously and within their stable flame limits.

6.6.3.2.1.2 Class 1 or Class 2 igniters, as demonstrated by test in accordance with 4.7.7 and 6.6.3.2.2, shall be permitted to be used to maintain stable flame.

6.6.3.2.2* Tests for Stable Flame Limits. The limits of stable flame for each burner subsystem producing a separate flame envelope shall be determined by tests without the ignition subsystem in service.

6.6.3.2.2.1 These tests shall verify that transients generated in the fuel and air subsystems do not affect the burners adversely during operation.

6.6.3.2.2.2 These tests shall include the expected range of fuels.

6.6.3.2.2.3 These tests shall be repeated after any combustion process modification, such as the addition of overfire air, low NO_x burners, reburn, and after switching to any fuel not previously tested.

6.6.3.2.3 Each main burner or burners in combination shall provide enough system resistance or damping to the fuel and airflow to override furnace pulsations and maintain stable combustion.

6.6.3.2.4 Provisions shall be made for visual observation of conditions at the burner ignition zone and for flame detection equipment.

6.6.3.2.5 Reserved.

6.6.3.2.6* Maintenance.

6.6.3.2.6.1 The burner equipment shall be in a location that allows access for maintenance.

6.6.3.2.6.2 The requirements of housekeeping in 4.4.1.2(8) shall be followed.

6.6.3.2.7 All burner safety shutoff valves shall be located close to the burner to minimize the volume of fuel left downstream of the burner valves in the burner lines.

6.6.3.3 Reserved.

6.6.3.4 Flue Gas Recirculation to Burners.

6.6.3.4.1 When flue gas or other inert gases are introduced to the secondary air or combustion air being supplied to burners, testing shall be used to demonstrate that the methods and devices used provide uniform distribution and mixing.

6.6.3.4.2 The oxygen content of the mixture being supplied to the burners shall not be permitted to go below the limit specified by the burner manufacturer or as proven by tests to provide stable combustion.

6.6.3.4.3 Means shall be provided to monitor either the ratio of flue gas to air or the oxygen content of the mixture.

6.6.3.5 Reburn Fuel Supply Subsystem — Fuel Gas.

6.6.3.5.1 Positive means to prevent leakage of fuel gas into an idle furnace shall be provided.

6.6.3.5.1.1 Provisions shall include a double block and vent valve arrangement on the reburn fuel gas supply, separate from any other double block and vent valve arrangements for other systems, that is, igniters or main burners.

6.6.3.5.1.2 Provisions shall be made to vent the piping between individual reburn shutoff valves and the last main reburn safety shutoff valve.

Copyright 2014 National Fire Protection Association (NFPA). Licensed, by agreement, for individual use and download on October 4, 2014 to LEADER and READER for designated user PATTARAPORN SRITRAKOOL. No other reproduction or transmission in any form permitted without written permission of NFPA. For inquires or to report unauthorized use, contact licensing@nfpa.org.

6.6.3.5.2 Furnace Temperature Tests.

6.6.3.5.2.1 Furnace temperature at the location of reburn fuel injection shall be at least 167°C (300°F) above the autoignition temperature of the reburn fuel and shall be verified by test.

6.6.3.5.2.2 The tests shall be performed for a variety of boiler loads, burner firing configurations, furnace cleanliness conditions, and excess air levels to determine the conditions under which reburn operation shall be permitted.

6.6.3.5.3* Fuel reburn systems shall include either temperature monitoring or reburn flame sensors.

6.6.3.5.4 Fuel reburn systems shall utilize a flue gas combustibles analyzer to detect combustibles.

6.6.3.6 Duct Burner Fuel Supply Subsystem — Fuel Gas.

6.6.3.6.1 Positive means shall be provided to prevent leakage into an idle furnace using a double block and vent valve arrangement on the fuel supply to each individual duct burner that is independent of any other burner, igniter, or injection system.

6.6.3.6.2 A main duct burner safety shutoff valve shall be provided that is independent of any other main fuel gas, igniter, or reburn safety shutoff valve.

6.6.3.6.3 Provisions shall be made to vent the piping between individual duct burner shutoff valves and the main duct burner safety shutoff valve.

6.6.3.6.4 Flame monitoring and tripping of individual duct burners shall be provided in accordance with 6.6.4.

6.6.3.7 Augmented Air.

6.6.3.7.1 Where provided, the fan(s) supplying augmented air to the duct burners shall be operated in accordance with the instructions provided by the duct burner manufacturer, the supplier of the augmented air system, and the organization having responsibility for the overall design.

6.6.3.7.2 Upon failure of an augmented air supply, means shall be provided to prevent hot gases from exiting through the augmented air system.

6.6.4 Flame Monitoring and Tripping System.

6.6.4.1 Igniters.

6.6.4.1.1 Class 1 Igniters.

6.6.4.1.1.1 Where Class 1 igniters are provided, the main burner flame shall be proven either by the flame detector or by the igniter being proven.

6.6.4.1.1.2 At least one flame detector shall be provided for each burner to detect the burner flame or igniter flame where a Class 1 igniter is provided.

6.6.4.1.2 Class 2 Igniters.

6.6.4.1.2.1 Burners with Class 2 igniters shall have at least two flame detectors.

6.6.4.1.2.2 One detector shall be positioned to detect the main burner flame and shall not detect the igniter flame.

6.6.4.1.2.3 The second detector shall be positioned to detect the igniter flame during prescribed light-off conditions.

6.6.4.1.3 Class 3 Igniters.

6.6.4.1.3.1 Burners with Class 3 igniters shall have at least one flame detector.

6.6.4.1.3.2 The detector shall be positioned to detect the igniter flame.

6.6.4.1.3.3 The detector also shall detect the main burner flame after the igniter is removed from service at the completion of the main burner trial for ignition.

6.6.4.2 Upon detection of loss of all flame in the furnace, a master fuel trip shall be automatically initiated.

6.6.4.3* Loss of flame indication on an operating burner or "flame envelope" shall close the safety shutoff valve to that burner or "flame envelope" and initiate an alarm that warns the operator.

6.6.4.4 Reburn System.

6.6.4.4.1 The reburn system shall be shut down in accordance with the reburn system manufacturer's requirements if the temperature falls below the limit specified in 6.6.3.5.2.1.

6.6.4.4.2 The reburn system shall be tripped if the temperature drops to 56°C (100°F) below the limit specified in 6.6.3.5.2.1.

6.6.4.4.3 Loss of flame shall trip the operation of the reburn system or portions of the reburn system in accordance with the reburn system manufacturer's requirements.

6.6.5 Operations.

6.6.5.1 General Operating Requirements.

6.6.5.1.1 All Conditions.

6.6.5.1.1.1 Prior to starting a unit, action shall be taken to prevent fuel from entering the furnace.

6.6.5.1.1.2 A unit purge shall be completed prior to starting a fire in the furnace.

6.6.5.1.1.3 The purge rate shall be not less than 25 percent of the design full load mass airflow.

6.6.5.1.1.4 The igniter for the burner shall always be used.

6.6.5.1.1.5 Burners shall not be lighted using a previously lighted burner or from hot refractory.

6.6.5.1.1.6 Where operating at low capacity, the burner fuel pressure shall be maintained above minimum by reducing the number of burners in service as necessary.

6.6.5.1.2 Sootblowers.

6.6.5.1.2.1 Sootblowers shall be operated only where heat input to the furnace is at a rate high enough to prevent a flameout during the sootblower operation.

6.6.5.1.2.2 Sootblowers shall not be operated at low load and high excess air conditions.

6.6.5.1.2.3 The use of wall sootblowers and high-temperature superheater and reheater sootblowers shall be permitted for cleaning during periods of unit outage if a unit purge has been completed and purge rate airflow is maintained.

6.6.5.1.2.4 The use of air heater sootblowers during start-up shall be permitted.

Copyright 2014 National Fire Protection Association (NFPA). Licensed, by agreement, for individual use and download on October 4, 2014 to LEADER and READER for designated user PATTARAPORN SRITRAKOOL. No other reproduction or transmission in any form permitted without written permission of NFPA. For inquires or to report unauthorized use, contact licensing@nfpa.org.

6.6.5.1.3* Leak Test.

6.6.5.1.3.1 An operational leak test of the fuel header piping system shall be performed in accordance with established procedures while maintaining, at a minimum, purge rate airflow.

6.6.5.1.3.2* Successful completion of the leak test shall be done before the main gas supply header is placed into operation.

6.6.5.1.4 Total Heat Input.

6.6.5.1.4.1 The total heat input within a burner or furnace zone, or both, shall not exceed the maximum limits specified for the equipment by the manufacturer.

6.6.5.1.4.2 The total heat inputs of multiple fuels shall be accounted for where a burner or furnace zone, or both, simultaneously fires more than one fuel.

6.6.5.1.5 Sequencing.

6.6.5.1.5.1 Sequencing shall be required to ensure that operating events occur in the order established by proven operating procedures.

6.6.5.1.5.2 Sequencing shall follow procedures that allow fuel that falls within design specifications to be admitted to the burners only when there is ignition energy and airflow within the minimum design requirements needed to ignite the fuel as it enters the furnace.

6.6.5.1.5.3 Sequencing also shall be utilized where burners are removed from operation.

6.6.5.1.5.4* The sequences of operation in 6.6.5 shall be followed whether the unit is operated manually or certain functions are accomplished by interlocks or automatic controls. *[See Figure A.6.6.5.1.5.4(a) and Figure A.6.6.5.1.5.4(b), which show the typical piping arrangements on which the text in 6.6.5 is based.]*

6.6.5.1.5.5 The starting and shutdown sequence outlined in 6.6.5 shall be followed to ensure an air-rich furnace atmosphere during start-up and establish minimum velocities through the furnace to prevent hazardous accumulations of unburned fuel.

(A) The sequence shall provide the required practice of maintaining a continuous airflow through the unit at the rate that is used during the purge operation.

(B) The rate that is used during the purge operation shall be maintained throughout the start-up and initial load-carrying period of operation until such time as more fuel and air are needed, which means that the same number of burner registers or burner dampers needed for purging the boiler shall be left open throughout the starting sequence as described in 6.6.5.1.5.6 through 6.6.5.1.5.8.

6.6.5.1.5.6 Burner Operation.

(A) Burners shall not be placed in service or removed in a random pattern but in a sequence defined by operating instructions and verified by actual experience with the unit to minimize laning or stratification of fuel or combustion products.

(B) Burners shall be placed in service as necessary, with fuel flows and individual register or damper settings positioned for light-off according to an established operating procedure.

(C) The fuel pressure at the burner header shall be permitted to be used as a guide in maintaining the necessary fuel flow for each burner and shall be maintained automatically within prescribed limits as additional burners are placed in service.

(D) The total number of burners placed in service shall be that number necessary to accomplish the following:

(1) Raise the boiler pressure or temperature
(2) Carry the initial load on the unit

(E) If some registers have been maintained in the closed position, the registers shall not be opened without either readjusting the total airflow to maintain the same burner airflow or closing an equal number of registers on idle burners to obtain the same effect.

(F) The total furnace air throughput shall not be reduced below the minimum purge airflow rate established by the designer in accordance with 6.4.2.3.4.4(A).

6.6.5.1.5.7* The open-register light-off and purge procedure shall be used to maintain airflow at or above the designer-established minimum purge rate during all operations of the boiler.

(A) The open register–purge procedure shall include the following:

(1) Use of minimum number of required equipment manipulations, thereby minimizing exposure to operating errors or equipment malfunction
(2) Creation of a fuel-rich condition at individual burners during their light-off
(3) Creation of an air-rich furnace atmosphere during light-off and warm-up by maintaining total furnace airflow at the same rate as that needed for the unit purge

(B) This procedure shall incorporate the following conditions:

(1) All the registers necessary to establish airflow at or above purge rate and uniform flow distribution throughout the furnace placed in a predetermined open position
(2) Overfire air port dampers placed in a predetermined position providing a purge of the overfire air system
(3) A unit purge completed with the burner air registers and overfire air ports in the position specified in 6.6.5.1.5.7(B)(1) and 6.6.5.1.5.7(B)(2)
(4) Prior to being placed into service, purge components (e.g., precipitators, fired reheaters) containing sources of ignition energy for either (1) a period of not less than 5 minutes or (2) five volume changes of that component, whichever is longer
(5) Common component(s) between the furnace outlet and the stack shared with other operating boilers bypassed for unit purge
(6) The first burner or group of burners lighted without any change in the airflow setting, overfire air control damper position, or burner air register position, except as permitted in 6.6.5.2.1.3(B)(8)

(C) Each boiler shall be tested during initial start-up to determine whether any modifications to the procedure specified in 6.6.5.1.5.7 are required to establish ignition or to satisfy other design limitations during light-off and warm-up.

(D) For boilers that are purged with the registers in their normal operating position, it shall be allowed to momentarily

Copyright 2014 National Fire Protection Association (NFPA). Licensed, by agreement, for individual use and download on October 4, 2014 to LEADER and READER for designated user PATTARAPORN SRITRAKOOL. No other reproduction or transmission in any form permitted without written permission of NFPA. For inquires or to report unauthorized use, contact licensing@nfpa.org.

close the registers of the burner being lighted, if proven necessary to establish ignition.

(E) Modifications in the basic procedure shall be allowed only if they have been proven to be necessary to obtain light-off.

(F) However, 6.6.5.1.5.7(A)(1) shall always be followed, thereby satisfying the basic objectives in 6.6.5.1.5.7(B).

6.6.5.1.5.8 Modification to the mode of operation due to water, steam, and flue gas temperatures being outside the established limits in the economizers and superheaters shall be made only after it has been determined to be necessary by operating experience.

6.6.5.2 Functional Requirements.

6.6.5.2.1 Cold Start. This subsection shall cover the requirements for placing fuel gas in service as the initial fuel being fired. Paragraph 6.6.5.2.6 shall cover the requirements for placing fuel gas in service as a subsequent fuel.

6.6.5.2.1.1 Preparation for starting shall include a thorough inspection that shall verify the following:

(1) The furnace and fuel gas passages are free of foreign material and not in need of repair.
(2) *The bottom of the furnace is free of accumulations of solid or liquid fuel, fuel gases, or vapors prior to each start-up.
(3) All personnel are evacuated from the unit and associated equipment, and all access and inspection doors are closed.
(4) All airflow and flue gas flow control dampers have been operated through their full range to check the operating mechanism and then are set at a position that allows the fans to be started at a minimum airflow and without overpressuring any part of the unit.
(5) All individual burner dampers or registers that are subject to adjustment during operations have been operated through their full range to check the operating mechanism.
(6) The drum water level is established in drum-type boilers, and circulating flow is established in forced circulation boilers, or minimum water flow is established in once-through boilers.
(7) The oxygen and combustibles analyzer(s), if provided, are operating as designed and a sample has been obtained. Combustible indication is at zero and oxygen indication is at maximum.
(8) All safety shutoff valves are closed, and all sparks are deenergized.
(9) Fuel oil ignition systems meet the requirements of Section 6.7.
(10) The fuel system vents are open and venting to atmosphere outside the boiler room, and lines are drained and cleared of materials such as condensate.
(11) The burner elements and igniters are positioned in accordance with the manufacturer's specifications.
(12) Energy is supplied to control systems and to interlocks.
(13) The meters or gauges indicate fuel header pressure to the unit.
(14) A complete functional check of the interlocks has been made after an overhaul or modification of the interlock system.
(15) *An operational test of each igniter has been made. The test has been integrated into the starting sequence and has followed the unit purge and preceded the admission of any main fuel.
(16) Individual igniters or groups of igniters also are permitted to be tested while the unit is in service. Such tests are made with no main fuel present in the igniter's associated burner, and the burner air register is in its start-up or light-off position as described in the established operating procedure.
(17) *Units with a history of igniter unreliability require additional test routines to verify the continuing operating ability of igniters and ignition system components.

6.6.5.2.1.2 Where provided, regenerative air heaters and flue gas recirculation fans shall be operated during all operations of the unit in a manner recommended by the boiler manufacturer.

6.6.5.2.1.3 Starting Sequence.

(A) Operation of regenerative-type air heaters, precipitators, and gas recirculation fans shall be included in the start-up sequence in accordance with the manufacturer's recommendations.

(B) The starting sequence shall be performed in the following order:

(1) An open flow path from the inlets of the FD fans through the stack shall be verified.
(2) An ID fan, if provided, shall be started; an FD fan then shall be started. Additional ID fans or FD fans shall be started in accordance with 6.5.3, as necessary, to achieve purge flow rate.
(3) Dampers and burner registers shall be opened to the purge position in accordance with the open register purge method objectives outlined in 6.6.5.1.5.7.
(4) The airflow shall be adjusted to purge airflow rate, and a unit purge shall be performed. Special provisions shall be utilized as necessary to prevent the hazardous accumulation of volatile vapors that are heavier than air or to detect and purge accumulations in the furnace bottom.
(5) The main fuel control valve shall be closed and the main safety shutoff valve(s) shall be opened, but only after the requirements of 6.6.3.1.11 for leak test requirements and 6.4.2.3.4 for permissive conditions in the unit purge system have been satisfied.
(6) It shall be determined that the main fuel control valve is closed, and the following procedures shall be performed:
    (a) The main fuel bypass control valve, if provided, shall be set to maintain the necessary burner header fuel pressure for light-off.
    (b) The burner headers shall be vented in order to be filled with fuel gas and to provide a flow (if necessary) so that the main fuel and bypass fuel control valves function to regulate and maintain the correct pressure for burner light-off.
    (c) The main fuel control valve shall be opened when necessary.
    (d) The time needed to vent for control of header pressure after header charging shall be evaluated and minimized.
(7) The igniter safety shutoff valve shall be opened, and the following shall be performed:
    (a) It shall be confirmed that the igniter fuel control valve is holding the manufacturer's recommended fuel pressure necessary for the igniter to operate at design capacity.

Copyright 2014 National Fire Protection Association (NFPA). Licensed, by agreement, for individual use and download on October 4, 2014 to LEADER and READER for designated user PATTARAPORN SRITRAKOOL. No other reproduction or transmission in any form permitted without written permission of NFPA. For inquires or to report unauthorized use, contact licensing@nfpa.org.

(b) The igniter headers shall be vented in order to be filled with fuel gas and to provide a flow (if necessary) so that the igniter fuel control valve functions to regulate and maintain the pressure within design limits specified by the manufacturer for lighting the igniters.

(c) The time needed to vent for control of header pressure after header charging shall be evaluated and minimized.

(8) The air register or damper on the burner selected for light-off shall be adjusted to the position recommended by the manufacturer or the established operating procedure, in accordance with 6.6.5.1.5.7(C) through 6.6.5.1.5.7(F).

(9) The spark or other source of ignition for the igniter(s) on the burner(s) to be lit shall be initiated, and the procedure shall continue as follows:

(a) The individual igniter safety shutoff valve(s) shall be opened, and all igniter system atmospheric vent valves shall be closed.

(b) If flame on the first igniter(s) is not established within 10 seconds, the individual igniter safety shutoff valve(s) shall be closed and the cause of failure to ignite shall be determined and corrected.

(c) With airflow maintained at purge rate, repurge shall not be required, but at least 1 minute shall elapse before a retrial of this or any other igniter is attempted.

(d) Repeated retrials of igniters without investigating and correcting the cause of the malfunction shall be prohibited.

(10) Where Class 3 special electric igniters are used, the procedures described in 6.6.5.2.1.3(B)(1) through 6.6.5.2.1.3(B)(6), 6.6.5.2.1.3(B)(8), and 6.6.5.2.1.3(B)(11) through 6.6.5.2.1.3(B)(14) shall be used, consistent with the the requirements for individual main burner flame supervision.

(11) After making certain that the igniter(s) is established and is providing the required level of ignition energy for the main burner(s), the following shall be performed:

(a) The individual burner safety shutoff valve(s) shall be opened and the individual burner atmospheric vent valves shall be closed.

(b) Except where associated Class 1 igniters are in service, a master fuel trip shall be initiated when the flame detection system(s) indicates that ignition has not been obtained within 5 seconds of the time the main fuel actually begins to enter the furnace.

(c) Purging shall be repeated, and the conditions that caused the failure to ignite shall be corrected before another light-off attempt is made.

(d) For the following burner and all subsequent burners placed in operation, failure to ignite or loss of ignition for any reason on any burner(s) shall cause fuel flow to that burner(s) to stop.

(e) All conditions required by the manufacturer or by established operating procedures for light-off shall exist before restarting the burner(s).

(12) After stable flame is established, the air register(s) or damper(s) shall be adjusted slowly to its operating position, making certain that ignition is not lost in the process. With automatic burner management systems, the air register shall be permitted to be opened simultaneously with the burner safety shutoff valve.

(13) Class 3 igniters shall be shut off at the end of the time trial for proving the main flame, and the following shall be verified:

(a) The stable flame continues on the main burners after the igniters are shut off.

(b) The systems that allow the igniters to remain in service on either an intermittent or a continuous basis have been tested to meet all the requirements of Class 1 igniters or Class 2 igniters with associated interlocks in service.

(14) After stable burner header pressure control has been established, the burner header atmospheric vent valve shall be closed.

(15)*The sequence shall continue as follows:

(a) The procedures in 6.6.5.2.1.3(B)(8) through 6.6.5.2.1.3(B)(13) shall be followed for placing additional burners with open registers in service, as necessary, to raise steam pressure or to carry additional load.

(b) If used, automatic control of burner fuel flow and burner airflow during the lighting and start-up sequence shall be in accordance with the requirements of 6.6.5.2.1.3(B)(17).

(c) The fuel flow to each burner (as measured by the burner fuel header pressure) shall be maintained at a controlled value that is compatible with the established airflow through the corresponding burner.

(d) The established airflow through each open register shall be permitted to be maintained by controlling the windbox-to-furnace differential.

(e) Total furnace airflow shall not be reduced below purge rate airflow and shall be at least that which is necessary for complete combustion in the furnace.

(f) If it is necessary to vary fuel header pressure to eliminate a problem of having excessive lighting off and shutting down of burners, such variations shall be limited to a predetermined range.

(g) This range shall be a function of the incremental fuel input that is added by the lighting of a single burner or gang of burners.

(16) The maximum number of burners shall be placed in service consistent with the anticipated continuous load and the operating range of fuel header pressures.

(17) The on-line metering combustion control (unless designed specifically for start-up procedures) shall not be placed into service until the following have occurred:

(a) A predetermined minimum main fuel input has been attained.

(b) All registers on nonoperating burners are closed unless compensation is provided for by the control system.

(c) The burner fuel and airflow are adjusted as necessary.

(d) Stable flame and specified furnace conditions have been established.

(18) It shall be permitted to place a multiple number of igniters in service that are served simultaneously from a single igniter safety shutoff valve, provided that the igniters are reliably supervised, so that failure of one of the group to light causes the fuel to all igniters in the group to shut off.

Copyright 2014 National Fire Protection Association (NFPA). Licensed, by agreement, for individual use and download on October 4, 2014 to LEADER and READER for designated user PATTARAPORN SRITRAKOOL. No other reproduction or transmission in any form permitted without written permission of NFPA. For inquires or to report unauthorized use, contact licensing@nfpa.org.

(19) It also shall be permitted to place in service simultaneously a multiple number of burners served by their corresponding multiple igniters from a single burner safety shutoff valve, provided that the burners are reliably supervised, so that failure of one of the group to light causes the fuel to all burners in the group to shut off.
(20) On units with an overfire air system, the overfire air control damper positions shall be permitted to be changed only when repositioning of all burner air registers or burner air dampers is permitted.
(21) On units with an overfire air system, the boiler shall be operating in a stable manner before the overfire air is introduced. The introduction of the overfire air shall not adversely affect boiler operation.
(22) On units with an overfire air system and a reburn system, the overfire air shall be placed in operation before the reburn fuel sequence is started.
(23) A reburn system shall be placed in service only after the following have occurred:
  (a) The boiler shall be operating at a load that ensures the introduction of the reburn fuel will not adversely affect continued boiler operation.
  (b) The temperature in the reburn zone shall be maintained in accordance with 6.6.3.5.2.
  (c) The boiler shall be operating in a stable manner before the reburn start-up sequence is initiated.

6.6.5.2.2 Normal Operation.

6.6.5.2.2.1* The firing rate shall be regulated by increasing or decreasing the fuel and air supply simultaneously to all operating burners, maintaining the air-fuel ratio within predetermined operating limits continuously at all firing rates.

(A) This requirement shall not eliminate the requirements for air lead and lag during changes in the fuel firing rate.

(B) This requirement shall not apply to systems provided with metering of air and fuel to each burner and designed specifically for individual burner modulating control.

6.6.5.2.2.2 The reburn injection rate shall be regulated within the design limits of the reburn equipment.

(A) Air flow lead and lag shall be used during changes in the reburn fuel injection rate.

(B) Reburn safety shutoff valves shall be fully open or completely closed.

(C) Intermediate settings shall not be used.

6.6.5.2.2.3 The firing rate shall not be regulated by varying the fuel to individual burners by means of the individual burner safety shutoff valve(s).

(A) The individual burner safety shutoff valve(s) shall be fully open or completely closed.

(B) Intermediate settings shall not be used.

6.6.5.2.2.4 Air registers shall be set at the firing positions as determined by tests except in systems provided with metering of air and fuel to each burner and designed specifically for individual burner modulating control.

6.6.5.2.2.5 The burner fuel and airflow shall be maintained within a range between the maximum and minimum limits as determined by trial or, if trial results do not exist, as specified by the combustion equipment manufacturer(s).

(A) These trials shall test for minimum and maximum limits and stable flame under each of the following conditions:

(1) With all fuel gas burners in service and combustion controls on automatic
(2) With different combinations of fuel gas burners in service and combustion controls on automatic
(3) With different combinations of fuel gas, fuel oil, and coal burners in service and combustion controls on automatic
(4) With minimum and maximum reburn flow rates
(5) With each reburn fuel injection pattern
(6) With overfire air operating at its minimum and maximum limits

(B) Where changes occur to any of the minimum and maximum limits because of equipment modifications, operating practices, or fuel conditions, retesting shall be required.

6.6.5.2.2.6 Loss of Individual Burner Flame. The burner register shall be closed if it interferes with the air-fuel ratio supplied to any other individual burner flame.

6.6.5.2.2.7 Total airflow shall not be reduced below the minimum purge rate established by the designer in accordance with 6.4.2.3.4.4.

6.6.5.2.3 Normal Shutdown. The requirements in 6.6.5.2.3 shall apply to the removal of fuel gas from service as the only main burner fuel being fired, and the requirements in 6.6.5.2.7 shall apply to the removal of fuel gas from service with other fuel remaining in service.

6.6.5.2.3.1 When the unit is being taken out of service, the boiler load shall be reduced to that necessitating a purge rate airflow, while operation is maintained within the tested limits determined in 6.6.5.2.2.5.

6.6.5.2.3.2 Prior to removing fuel gas from service and prior to loss of reburn permissives, reburn fuel shall be shut down as defined in 6.6.5.2.9, 6.7.5.2.9, or 6.8.5.2.9.

6.6.5.2.3.3 The metering combustion control shall be taken out of service, and the start-up fuel supply pressure, register settings, and airflows shall be established in accordance with written start-up procedures.

6.6.5.2.3.4 Where designed for start-up and shutdown procedures, the metering combustion control shall not be required to be taken out of service.

6.6.5.2.3.5 As the fuel is reduced, a sequential shutdown of the burners shall be accomplished by closing the individual burner safety shutoff valves, opening the associated vent valves, and placing registers in the position prescribed by the established operating procedure(s).

6.6.5.2.3.6 When the last individual burner safety shutoff valves are closed, the main safety shutoff valve shall be checked to confirm that it has closed.

6.6.5.2.3.7 All atmospheric vent valves shall be opened to minimize the possibility of fuel gas leaking into the boiler enclosure.

6.6.5.2.3.8 When all burners, igniters, and the reburn system have been removed from service, the purge rate airflow shall be verified and a unit purge shall be performed.

6.6.5.2.3.9 After completion of the unit purge, closing the burner air registers and shutting down the forced draft fans and induced draft fans shall be permitted to be optional; however, maintaining airflow through the unit to prevent accumulation of

Copyright 2014 National Fire Protection Association (NFPA). Licensed, by agreement, for individual use and download on October 4, 2014 to LEADER and READER for designated user PATTARAPORN SRITRAKOOL. No other reproduction or transmission in any form permitted without written permission of NFPA. For inquires or to report unauthorized use, contact licensing@nfpa.org.

combustible gases is a prudent procedural step due to the potential of fuel leak-by.

6.6.5.2.3.10 Leakage of main or igniter fuel into the furnace or windbox shall be prevented.

6.6.5.2.4 Normal Hot Restart.

6.6.5.2.4.1 When restarting a hot unit, the requirements of 6.6.5.2.1.1(6) through 6.6.5.2.1.1(13) for a cold start shall be met.

6.6.5.2.4.2 The starting sequence in 6.6.5.2.1.3 shall be followed.

6.6.5.2.5 Emergency Shutdown — Master Fuel Trip.

6.6.5.2.5.1 An emergency shutdown shall initiate a master fuel trip.

6.6.5.2.5.2 Mandatory Automatic Master Fuel Trips.

(A) Interlocks shall be installed in accordance with 6.4.2 and 6.5.4.

(B) A master fuel trip shall result from any of the following conditions:

(1) Fuel pressure at the burner below the minimum established by the manufacturer or by trial, and no other fuel proven in service. Where fuel pressure at the burner is not measurable, a low fuel gas pressure trip shall be provided upstream of the control valve. If another fuel is proven in service, this shall cause a fuel gas fuel trip, but not a master fuel trip.
(2) Total airflow decreases below the minimum purge rate airflow as required in 6.4.2.3.4.4(A) by 5 percent design full load airflow.
(3) Loss of either all induced draft fans or all forced draft fans.
(4) Loss of all flame.
(5) Partial loss of flame predetermined to be likely to introduce a hazardous accumulation of unburned fuel in accordance with Table 6.4.2.3.1(a), block 8.
(6) Furnace pressure in excess of the prescribed operating pressure by a value specified by the manufacturer.
(7) All fuel inputs shut off in accordance with Table 6.4.2.3.1(a), block 9.
(8) High fuel gas pressure and no other fuel proven in service. If another fuel is proven in service, this shall cause a fuel gas fuel trip, but not a master fuel trip.

6.6.5.2.5.3 Mandatory Master Fuel Trips with Alarms — Not Necessarily Automatically Initiated. A master fuel trip shall result from any of the following conditions:

(1) Loss of energy supply for boiler control, burner management, or interlock systems
(2) Furnace negative pressure in excess of the value specified by the manufacturer *(See 6.4.2.3.6.5.)*

6.6.5.2.5.4 A master fuel trip that results from any of the emergency conditions tabulated in 6.6.5.2.5.2 and 6.6.5.2.5.3 shall stop all fuel flow to the furnace from all burners and the reburn system by tripping the main and individual burner safety shutoff valves and the main and individual reburn safety shutoff valves.

(A) All vent valves shall be opened.

(B) The igniter safety shutoff valve and individual igniter safety shutoff valves shall be tripped, and the igniter sparks shall be de-energized.

(C) If a furnace inerting system is installed, the inerting system shall be operated simultaneously with the master fuel trip.

(D) Master fuel trips shall operate to stop all fuel flow into the furnace within a period of time that does not allow a dangerous accumulation of fuel in the furnace.

(E) A master fuel trip shall not initiate a forced draft fan or induced draft fan trip.

(F) Electrostatic precipitators, fired reheaters, or other ignition sources shall be tripped.

6.6.5.2.5.5 Following a master fuel trip, the unit shall be purged in accordance with 6.4.2.3.4.

6.6.5.2.6 Starting Sequence — Second Fuel.

6.6.5.2.6.1 When starting fuel gas as a second fuel, the requirements of 6.6.5.2.1.1(8) through 6.6.5.2.1.1(13) shall have been satisfied, and the total heat input shall be limited as described in 6.6.5.1.4.

6.6.5.2.6.2 The starting sequence of the first fuel (oil or coal) shall be completed, and the starting sequence of second fuel (fuel gas) shall be performed in the following order:

(1) The main fuel gas control valve shall be closed and the main safety shutoff valve(s) shall be opened, but only after leak test requirements of 6.6.5.1.3 have been met.
(2) The starting sequence in 6.6.5.2.1.3(B)(6) through 6.6.5.2.1.3(B)(10) shall be followed.
(3) After making certain that the igniter(s) is established and is providing the predetermined, required level of ignition energy for the main burner(s), the individual burner safety shutoff valve(s) shall be opened and the individual burner atmospheric vent valves shall be closed. Failure to ignite or loss of ignition for any reason on any burner(s) shall cause fuel flow to that burner(s) to stop. All conditions required by the established light-off procedure shall exist before restarting the burner(s).
(4) The starting sequence in 6.6.5.2.1.3(B)(11) through 6.6.5.2.1.3(B)(17) shall be followed.

Exception: An exception to 6.6.5.2.6.2(4) is that for sequence 6.6.5.2.1.3(B)(11), where fuel gas is the second fuel to be placed in service, a fuel gas trip, but not necessarily a master fuel trip, shall be initiated when the flame detection system(s) indicates that ignition has not been obtained within 5 seconds of the time the fuel gas actually begins to enter the furnace. A master fuel trip shall not be required.

6.6.5.2.7 Shutdown Sequence — Second Fuel. The requirements in 6.6.5.2.7 shall apply to the removal of fuel gas from service with other main burner fuel remaining in service, and the requirements in 6.6.5.2.3 shall apply to the removal of fuel gas from service as the only main burner fuel being fired.

6.6.5.2.7.1 When shutting off fuel gas with fuel oil or coal remaining in service, a sequential shutdown of the fuel gas burners shall be accomplished by closing the individual burner safety shutoff valves and opening the vent valves.

6.6.5.2.7.2 The remaining burners shall be shut down sequentially as previously described, leaving the registers in the position prescribed by the established operating procedure.

6.6.5.2.7.3 When the last individual burner safety shutoff valves are closed, the main safety shutoff valve shall be closed.

6.6.5.2.7.4 All atmospheric vent valves shall be opened to minimize the possibility of fuel gas leaking into the boiler enclosure.

Copyright 2014 National Fire Protection Association (NFPA). Licensed, by agreement, for individual use and download on October 4, 2014 to LEADER and READER for designated user PATTARAPORN SRITRAKOOL. No other reproduction or transmission in any form permitted without written permission of NFPA. For inquires or to report unauthorized use, contact licensing@nfpa.org.

6.6.5.2.8 Reburn System Start.

6.6.5.2.8.1 The reburn system shall not be started until the requirements of 6.6.3.5.2 have been met and shall follow the prerequisites of 6.6.5.2.1.3(B)(23).

6.6.5.2.8.2* In addition to the requirements of 6.6.5.2.8.1, the furnace temperature characteristics as a function of heat input, steam flow, or other reliable control signal shall be utilized as a permissive to initiate the reburn fuel injection.

6.6.5.2.8.3 If the reburn system admits reburn fuel through burners, the starting sequence shall also follow that specified for burners in 6.6.5.2.1.3(B)(6) through 6.6.5.2.1.3(B)(14).

6.6.5.2.8.4 If the reburn system admits reburn fuel by means other than through burners, the starting sequence shall incorporate the following:

(1) Include all reburn operation permissives required by this chapter.
(2) Follow the procedure specified by the manufacturer of the reburn system.

6.6.5.2.9 Shutdown Sequence — Reburn Fuel.

6.6.5.2.9.1 If the reburn system admits reburn fuel through burners, the shutdown sequence shall follow that specified for burners in 6.6.5.2.3.

6.6.5.2.9.2 If the reburn system admits reburn fuel by means other than through burners, the shutdown sequence shall be as follows:

(1) Reduce the reburn fuel flow to minimum.
(2) Close individual reburn shutoff valves.
(3) Close the main reburn safety shutoff valve(s).
(4) Open the reburn header atmospheric vent valves.

6.6.5.2.10 Duct Burner Purge and Light-Off.

6.6.5.2.10.1 The duct burner shall be purged as part of the unit purge prior to initiating any firing in the unit and after a master fuel trip.

Exception: Duct burners in primary air systems shall be purged prior to the duct burner being put into service.

6.6.5.2.10.2 A duct burner trip shall require a purge of the duct burners using air or flue gas for a minimum of 5 minutes prior to any attempt to relight the duct burner.

6.6.5.2.10.3 A duct burner failure to ignite shall require a purge of the duct burners using air or flue gas for a minimum of 1 minute prior to any attempt to relight the duct burner.

6.6.5.2.10.4 When augmented air is provided, the augmented air plenum and ductwork shall be purged using the augmented air system as part of the duct burner purge.

6.6.5.2.11 Duct Burner Starting Sequence.

6.6.5.2.11.1 All duct burner and duct burner igniter safety shutoff valves shall be proven closed.

6.6.5.2.11.2 Airflow or flue gas flow through the duct burner shall be established.

6.6.5.2.11.3 The duct burner fuel header shall be pressurized up to the individual duct burner safety shutoff valves in accordance with established operating procedures.

6.6.5.2.11.4 The individual duct burner igniter systems shall be placed in service.

6.6.5.2.11.5 The duct burner fuel control valve shall be set to the burner light-off position.

6.6.5.2.11.6 With its igniter in service, the individual duct burner safety shutoff valves shall be opened.

(A) Class 3 igniters shall be shut down at the end of the trial for ignition period.

(B) If no main duct burner flame is proven within 5 seconds after the main fuel reaches the duct burner, the duct burner fuel trip shall be initiated as well as closing the individual duct burner safety shutoff valves closed. The following shall apply:

(1) The cause of failure to ignite shall be determined and corrected.
(2) A purge of the duct burner for a minimum of 5 minutes with either air or flue gas shall be completed prior to attempting to start any other fuel equipment on the unit.

6.6.5.2.11.7 The associated igniter for a duct burner shall be used to light the burner.

6.6.5.2.11.8 Succeeding duct burners shall be placed in service in accordance with 6.6.5.2.11.4 through 6.6.5.2.11.7.

6.6.5.2.12 Duct Burner Normal Operation.

6.6.5.2.12.1 Duct burner firing rate shall be regulated by varying the fuel to the duct burners by means of fuel flow control valve(s) or staged firing.

6.6.5.2.12.2 Individual burner safety shutoff valves shall be fully open or fully closed and shall not be placed in intermediate positions to regulate duct burner firing rate.

6.6.5.2.12.3 Duct burner firing rate shall be maintained between the maximum and minimum stable flame limits as established by test.

6.6.5.2.13 Duct Burner Shutdown.

6.6.5.2.13.1 Duct burners shall be removed from service by sequentially closing individual duct burner safety shutoff valves.

6.6.5.2.13.2 Closing the individual duct burner safety shutoff valves on the last duct burner in service shall cause a duct burner fuel trip.

6.6.5.2.14 Duct Burner Emergency Shutdown. A duct burner fuel trip as identified in 6.4.2.3.12.1 shall close all duct burner safety shutoff valves.

6.6.5.3 Emergency Conditions Not Requiring Shutdown or Trip.

6.6.5.3.1 In the event of a loss of a fan or fans, for units with multiple ID fans, FD fans, or both, the control system shall be capable of reducing the fuel flow to match the remaining airflow; otherwise, tripping of the unit shall be mandatory.

6.6.5.3.2* If an air deficiency develops while flame is maintained at the burners, the fuel shall be reduced until the air-fuel ratio has been restored to within predetermined acceptable limits; if fuel flow cannot be reduced, the airflow shall be increased slowly until the air-fuel ratio has been restored to within those limits.

6.6.6* Boiler Front Control (Supervised Manual). Supervised manual operation shall not apply to new construction.

Copyright 2014 National Fire Protection Association (NFPA). Licensed, by agreement, for individual use and download on October 4, 2014 to LEADER and READER for designated user PATTARAPORN SRITRAKOOL. No other reproduction or transmission in any form permitted without written permission of NFPA. For inquires or to report unauthorized use, contact licensing@nfpa.org.

6.6.7 Two-Burner Systems — Single Fuel Flow Control.

6.6.7.1 Fundamental Principles.

6.6.7.1.1* Two-burner boilers that are served by a single fuel flow control valve and a single airflow control damper and provided with fuel safety shutoff valves for each burner shall meet the special design and operating requirements of 6.6.7.

6.6.7.1.2 Subsection 6.6.7 shall not apply to two-burner boilers with separate air-fuel ratio controls that consist of a fuel flow control valve and an airflow control damper for each burner and that provide independent burner operation.

6.6.7.1.3 Subsection 6.6.7 shall not apply to two burners that are lighted off, operated, and shut down in unison as a single burner, with common fuel and airflow controls and fuel safety shutoff valves. Such systems shall be in accordance with Chapter 5, 6.6.5.2.1.3(B)(18), and 6.6.5.2.1.3(B)(19).

6.6.7.2 System Requirements.

6.6.7.2.1 The control system design options of 6.6.7.2.1.1 and 6.6.7.2.1.2 shall be provided to maintain the air-fuel ratio within manufacturer's suggested limits on one burner in the event of an automatic trip of the other burner.

6.6.7.2.1.1 A flame failure signal at one of the two burners shall initiate one of the following immediately and automatically:

(1) A master fuel trip.
(2)*A trip of the individual fuel safety shutoff valve(s) for the failed burner and a reduction of total boiler fuel flow by 50 percent of the flow prior to trip without reducing total boiler airflow or individual burner airflow. This action shall be accomplished by correcting the burner header fuel pressure to the value at which it had been operating prior to the trip of the first burner.
(3) A trip of the individual fuel safety shutoff valve(s) for the failed burner and simultaneous shutoff of the air supply to that burner. The fuel input to the operating burner shall not exceed the established maximum firing rate or the manufacturer's suggested air-fuel ratio limits of the burner.

6.6.7.2.1.2 The automatic recycling mode of operation shall be prohibited.

6.6.7.2.2 Burner Light-Off Procedures. The following operating procedures shall be followed to prevent air-fuel ratio upsets during burner light-off:

(1) Prior to light-off of the first burner, the furnace shall be purged with airflow through both burner registers at purge rate.
(2) When the first burner is being lit, the registers in the second burner shall be left open to the purge position.
(3) The operator shall observe main flame stability while making any register or burner damper adjustments.
(4) During and after the light-off of the second burner, the operator shall observe the flame stability on the first burner.
(5) If a boiler is operating on one burner with the air supply closed off to the other burner and it becomes necessary to light the second burner, established operating procedures shall be used to prevent creating a hazardous air-fuel ratio at the first operating burner. The following general procedures shall be followed to prevent air starvation of the operating burner when air is introduced to the idle burner in preparation for its light-off:
   (a) Before any air is admitted to the idle burner, the excess air on the operating burner shall be increased either by increasing airflow while holding fuel flow constant or by reducing fuel flow while holding airflow constant.
   (b) The register or damper at the idle burner shall be opened slowly while the effect on the operating burner is continuously observed and adjustments to fuel flow or total boiler airflow necessary to maintain stable flame are made.
   (c) After the second burner has been lit, flame stability shall be confirmed at both burners before control is transferred to the combustion control system.
(6) Where the two burners are not equipped with individual burner air registers or dampers, 6.6.7.2.2(5) shall not apply. Total boiler airflow shall be maintained so that the operating burner's air-fuel ratio stays within the manufacturer's suggested limits.

6.6.7.3 Fuel Transfer Procedure.

6.6.7.3.1 An operating procedure, either manual or automatic, that prevents a hazardous air-fuel ratio at either burner when a fuel transfer is made shall be followed.

6.6.7.3.2 The following procedure shall be followed:

(1) Total fuel flow and airflow shall be reduced to within the design capacity of one burner.
(2) Both fuel and air to the burner on which fuels are to be transferred shall be shut off simultaneously.
(3) The burner shall be restarted on the new fuel in accordance with the procedures in 6.6.7.2.2(5).

6.7 Fuel Oil Systems.

6.7.1 General. The requirements of Section 6.7 shall apply to installations where fuel oil is supplied. *(See Section K.4.)*

6.7.2 Fuel Oil Firing — Special Problems. In addition to the common hazards involved in the combustion of solid, liquid, and gaseous fuels, the following special hazards related to the physical characteristics of fuel oil shall be addressed in the design of the firing systems *(see Section K.6)*:

(1) Piping systems shall be designed to prevent leakage.
(2) Limits to maintain atomization shall be in accordance with design parameters.
(3) Fuel oil piping systems shall be designed to prevent water or sludge from plugging strainers or burner tips.
(4) Combustion airflow shall follow changes in calorific content of fuel. *[See Section K.3(4).]*
(5) On installations designed to fire both heated and unheated fuel oils, the burner control system shall be designed to ensure that interlocks are activated for the selected fuel oil. The fuel oil piping supply to the burner as well as the fuel oil-recirculating piping to the fuel storage tanks shall be provided with interlocks, depending on the arrangement of the equipment provided.
(6) Fuel oil guns shall not be inserted without a tip or sprayer plate and new gasket.
(7) Pumping and atomization of fuel oils are dependent on control of viscosity. Changes in viscosity in relation to temperature vary for different fuel oils and blends of fuel oils. Viscosity control systems shall be designed for each fuel where the source or properties are variable.

Copyright 2014 National Fire Protection Association (NFPA). Licensed, by agreement, for individual use and download on October 4, 2014 to LEADER and READER for designated user PATTARAPORN SRITRAKOOL. No other reproduction or transmission in any form permitted without written permission of NFPA. For inquires or to report unauthorized use, contact licensing@nfpa.org.

(8) *Because clear distillate fuels have low conductivities and generate static electrical charges in the fuel stream, flowing velocities shall be limited.
(9) Piping systems shall prevent flow transients caused by operation of system valves. *[See Section K.3(8).]*
(10) *Operation of air heater sootblowers shall be in accordance with the requirements of the air heater manufacturer.

6.7.3 System Requirements.

6.7.3.1 Fuel Supply Subsystem — Fuel Oil. The requirements in this subsection shall apply to fuel oil supply piping, and all installed piping arrangements shall meet the functional requirements of this code. *[See Figure A.6.7.5.1.5.4(a) and Figure A.6.7.5.1.5.4(d), which show the typical fuel oil piping arrangements on which the text in this code is based.]*

6.7.3.1.1 Equipment Size and Arrangement.

6.7.3.1.1.1 The fuel supply equipment shall be sized to satisfy the design requirements and arranged to ensure a continuous, steady fuel flow over all operating requirements of the unit.

6.7.3.1.1.2 This design shall include coordination of the main fuel control valve, burner safety shutoff valves, and associated piping volume to ensure against fuel pressure transients that exceed burner limits for stable flame as a result of placing burners in service or taking them out of service.

6.7.3.1.1.3* Fill and recirculation lines to storage tanks shall discharge below the liquid level.

6.7.3.1.2 Fuel Oil Supply Overpressure Protection.

6.7.3.1.2.1* Means shall be provided to prevent or relieve excess pressure from expansion of entrapped fuel oil in the fuel system.

6.7.3.1.2.2* Relief valve discharge passages, vents, and telltales shall be provided with suitable piping to allow safe discharge of fuel oil, vapors, or toxic fumes.

6.7.3.1.3 A manual emergency shutoff valve that is accessible in the event of fire in the boiler area shall be provided.

6.7.3.1.4 Fuel Contamination.

6.7.3.1.4.1 If heating of fuel oil is necessary, it shall be accomplished without contamination or coking.

6.7.3.1.4.2 Strainers, filters, traps, sumps, and other such items shall be provided to remove harmful contaminants; compensation for those materials not removed shall be provided by special operating and maintenance procedures. *[See Section K.4(7).]*

6.7.3.1.4.3 Unloading, storage, pumping, heating, and piping facilities shall be designed and arranged to inhibit contamination of the fuel.

6.7.3.1.4.4 Where necessary, cleaning devices shall be provided to ensure a clean fuel to valves and burners.

6.7.3.1.5 Convenient access to important fuel system components and drains shall be provided.

6.7.3.1.6 Drains shall be provided at low points in the piping.

6.7.3.1.7 Fuel oil shall be delivered to the burners at the temperature and pressure recommended by the burner manufacturer to ensure that the fuel oil is at the viscosity necessary for atomization.

6.7.3.1.8 The fuel supply equipment shall be designed based on the operating environment and ambient conditions. *[See Section K.4(8).]*

6.7.3.1.9* Fire and Mechanical Impact. All fuel oil piping, including instrument and control piping, shall be designed to be resistant to severe external conditions such as fire or mechanical damage.

6.7.3.1.10 Positive means to prevent leakage of fuel oil into an idle furnace shall be provided.

6.7.3.1.11 Valve Leak Testing.

6.7.3.1.11.1 Tightness tests of the main safety shutoff valves and individual burner safety shutoff valves shall be performed.

6.7.3.1.11.2 Provisions shall be made in the fuel oil supply system to allow testing for leakage and subsequent repair that includes a permanent means for making accurate tightness tests of the main safety shutoff valves and individual burner safety shutoff valves.

6.7.3.1.12 Recirculation.

6.7.3.1.12.1 Recirculation provisions shall be incorporated for controlling the viscosity of the oil to the burners for initial light-off and for subsequent operation.

6.7.3.1.12.2 These systems shall be designed and operated to prevent excessively hot oil from entering fuel oil pumps, which could cause them to vapor bind, with subsequent interruption to the fuel oil supply.

6.7.3.1.13* Positive means shall be provided to prevent fuel oil from entering the burner header system through recirculating valves, particularly from the fuel supply system of another boiler.

6.7.3.1.13.1 These means shall utilize the requirements of Table 6.4.2.3.1(a), blocks 3 through 13.

6.7.3.1.13.2 Check valves have not proven dependable in heavy oil service and shall not be used for this function.

6.7.3.1.14 Provisions shall be included for clearing (scavenging) the passages of an atomizer that leads into the furnace, which shall be performed in accordance with the requirements of 6.4.2.3.4.3(D), 6.7.5.1.1.7, 6.7.5.2.3.5, and 6.7.5.2.3.6.

6.7.3.2 Main Burner Subsystem.

6.7.3.2.1* Stable Flame Limits.

6.7.3.2.1.1 The main burner subsystem shall be designed so that the burner inputs are supplied to the furnace continuously and within their stable flame limits.

6.7.3.2.1.2 Class 1 or Class 2 igniters, as demonstrated by tests as specified in 6.7.3.2.2 and 6.7.3.2.3, shall be permitted to be used to maintain stable flame at the lower operating limits of the main fuel subsystem in any given furnace design.

6.7.3.2.2 Tests for Stable Flame Limits. The limits of stable flame for each burner subsystem producing a separate flame envelope shall be determined by tests performed without the ignition subsystem in service.

6.7.3.2.2.1* These tests shall verify that transients generated in the fuel and air subsystems do not affect the burners adversely during operation.

Copyright 2014 National Fire Protection Association (NFPA). Licensed, by agreement, for individual use and download on October 4, 2014 to LEADER and READER for designated user PATTARAPORN SRITRAKOOL. No other reproduction or transmission in any form permitted without written permission of NFPA. For inquires or to report unauthorized use, contact licensing@nfpa.org.

6.7.3.2.2.2 These tests shall include the expected range of fuels to be fired in the unit.

6.7.3.2.2.3 These tests shall be repeated after any combustion process modification, such as the addition of overfire air, low NO_x burners, and reburning, and after switching to any fuel not previously tested.

6.7.3.2.3 Additional Tests.

6.7.3.2.3.1 Where Class 1 and Class 2 igniters are used, the tests described in 4.7.7 and 6.7.3.2.2 shall be performed with the ignition subsystem in service to verify that the igniters furnished meet the requirements of the class specified in the design.

6.7.3.2.3.2 The resulting extended turndown range shall be permitted when Class 1 igniters are in service and flames are proved.

6.7.3.2.4 Provisions shall be made for visual observation of conditions at the burner ignition zone and for flame detection equipment.

6.7.3.2.5 Provisions shall be made for cleaning of the burner nozzle and tip.

6.7.3.2.6* Maintenance.

6.7.3.2.6.1 The burner equipment shall be in a location that allows access for maintenance.

6.7.3.2.6.2 The requirements of housekeeping in 4.4.1.2(8) shall be followed.

6.7.3.2.7 All burner safety shutoff valves shall be located close to the burner to minimize the volume of fuel oil that is left downstream of the burner valves in the burner lines or that flows by gravity into the furnace on an emergency trip or burner shutdown.

6.7.3.3 Atomizing Subsystem.

6.7.3.3.1 Where the fuel is to be atomized with the assistance of another medium, the atomizing medium shall be supplied free of contaminants that could cause an interruption of service.

6.7.3.3.2 For steam atomizing, insulation and traps shall be included to ensure dry atomizing steam to the burners.

6.7.3.3.3 The atomizing medium shall be provided and maintained at the specified pressure necessary for operation.

6.7.3.3.4 Provisions shall be made to ensure that fuel does not enter the atomizing medium line during or after operation.

6.7.3.3.5 The atomizing subsystem shall be designed for convenient cleaning and maintenance.

6.7.3.4 Flue Gas Recirculation to Burners.

6.7.3.4.1 When flue gas or other inert gases are introduced to the secondary air or combustion air being supplied to burners, testing shall be used to demonstrate that the methods and devices used provide uniform distribution and mixing.

6.7.3.4.2 The oxygen content of the mixture being supplied to the burners shall not be permitted to go below the limit specified by the burner manufacturer or as proven by tests to provide stable combustion.

6.7.3.4.3 Means shall be provided to monitor either the ratio of flue gas to air or the oxygen content of the mixture.

6.7.3.5 Reburn Fuel Supply Subsystem — Fuel Oil.

6.7.3.5.1 Positive means to prevent leakage of fuel oil into an idle furnace shall be provided that shall include a double block valve arrangement on the reburn fuel oil supply, separate from any other double block valve arrangements for other systems, that is, igniters or main burners.

6.7.3.5.2 Temperature Test.

6.7.3.5.2.1 Furnace temperature at the location of the reburn fuel injection shall be at least 167°C (300°F) above the autoignition temperature of the reburn fuel and shall be verified by test.

6.7.3.5.2.2 The tests shall be performed for a variety of boiler loads, burner firing configurations, furnace cleanliness conditions, and excess air levels to determine the conditions under which reburn operation shall be permitted.

6.7.3.5.3* Fuel reburn systems shall include either temperature monitoring or reburn flame sensors.

6.7.3.5.4 Fuel reburn systems shall utilize a flue gas combustibles analyzer to detect combustibles.

6.7.4 Flame Monitoring and Tripping System.

6.7.4.1 Each burner shall be supervised individually, and upon detection of loss of a burner flame, that individual burner safety shutoff valve shall be automatically closed.

6.7.4.1.1 Class 1 Igniter.

6.7.4.1.1.1 Where Class 1 igniters are provided, the main burner flame shall be proven either by the flame detector or by the igniter being proven.

6.7.4.1.1.2 At least one flame detector shall be provided for each burner to detect the burner flame or igniter flame where a Class 1 igniter is provided.

6.7.4.1.2 Class 2 Igniter.

6.7.4.1.2.1 Burners with Class 2 igniters shall have at least two flame detectors.

6.7.4.1.2.2 One detector shall be positioned to detect the main burner flame and shall not detect the igniter flame.

6.7.4.1.2.3 The second detector shall be positioned to detect the igniter flame during prescribed light-off conditions.

6.7.4.1.3 Class 3 Igniter.

6.7.4.1.3.1 Burners with Class 3 igniters shall have at least one flame detector.

6.7.4.1.3.2 The detector shall be positioned to detect the igniter flame.

6.7.4.1.3.3 It also shall detect the main burner flame after the igniter is removed from service at the completion of the main burner trial for ignition.

6.7.4.2 Upon detection of loss of all flame in the furnace, a master fuel trip shall be automatically initiated.

6.7.4.3* Loss of flame indication on an operating burner or "flame envelope" shall close the safety shutoff valve to that burner or flame envelope and initiate an alarm that warns the operator of a potential hazard.

Copyright 2014 National Fire Protection Association (NFPA). Licensed, by agreement, for individual use and download on October 4, 2014 to LEADER and READER for designated user PATTARAPORN SRITRAKOOL. No other reproduction or transmission in any form permitted without written permission of NFPA. For inquires or to report unauthorized use, contact licensing@nfpa.org.

6.7.4.4 Reburn System.

6.7.4.4.1 The reburn system shall be shut down in accordance with the reburn system manufacturer's requirements if the temperature falls below the limit specified in 6.7.3.5.2.

6.7.4.4.2 The reburn system shall be tripped if the temperature drops to 56°C (100°F) below the limit specified in 6.7.3.5.2.

6.7.4.4.3 Loss of flame shall trip the operation of the reburn system, or portions of the reburn system, in accordance with the reburn system manufacturer's requirements.

6.7.5 Operations.

6.7.5.1 General Operating Requirements.

6.7.5.1.1 All Conditions.

6.7.5.1.1.1 Prior to starting a unit, action shall be taken to prevent fuel from entering the furnace.

6.7.5.1.1.2 A unit purge shall be completed prior to starting a fire in the furnace.

6.7.5.1.1.3 The purge rate shall be not less than 25 percent of the design full load mass airflow.

6.7.5.1.1.4 The igniter for the burner shall always be used.

6.7.5.1.1.5 Burners shall not be lighted using a previously lighted burner or from hot refractory.

6.7.5.1.1.6 Where operating at low capacity, the burner fuel pressure shall be maintained above minimum by reducing the number of burners in service as necessary.

6.7.5.1.1.7 Where clearing oil passages into the furnace, igniters shall be in service, with ignition established, and shall be in accordance with 6.7.5.2.3.5 through 6.7.5.2.3.7.

6.7.5.1.2 Sootblowers.

6.7.5.1.2.1 Sootblowers shall be operated only where heat input to the furnace is at a rate high enough to prevent a flameout during the sootblower operation.

6.7.5.1.2.2 Sootblowers shall not be operated at low load and high excess air conditions.

6.7.5.1.2.3 The use of wall sootblowers and high temperature superheater and reheater sootblowers shall be permitted for cleaning during periods of unit outage if a unit purge has been completed and purge rate airflow is maintained.

6.7.5.1.2.4 The use of air heater sootblowers during start-up shall be permitted.

6.7.5.1.2.5 Operation of air heater sootblowers shall be in accordance with the requirements of the air heater manufacturer.

6.7.5.1.3* Operational Leak Test. An operational leak test shall be performed in accordance with established procedures while maintaining, at a minimum, purge rate airflow before the oil supply header is placed in service.

6.7.5.1.4 Total Heat Input.

6.7.5.1.4.1 The total heat input within a burner or furnace zone, or both, shall not exceed the maximum limits specified for the equipment by the manufacturer.

6.7.5.1.4.2 The total heat inputs of multiple fuels shall be accounted for where a burner or furnace zone, or both, simultaneously fires more than one fuel.

6.7.5.1.5 Sequencing.

6.7.5.1.5.1 Sequencing shall be required to ensure that operating events occur in the order established by proven operating procedures.

6.7.5.1.5.2 Sequencing shall follow procedures that allow fuel that falls within design specifications to be admitted to the burners only when there is ignition energy and airflow within design minimum requirements needed to ignite the fuel as it enters the furnace.

6.7.5.1.5.3 Sequencing also shall be utilized when burners are removed from operation.

6.7.5.1.5.4* The sequences of operation in 6.7.5 shall be followed whether the unit is operated manually or certain functions are accomplished by interlocks or automatic controls.

6.7.5.1.5.5 The starting and shutdown sequences outlined in 6.7.5 shall be followed to ensure an air-rich furnace atmosphere during start-up and establish minimum velocities through the furnace to prevent hazardous accumulations of unburned fuel.

(A) The sequence shall provide the required practice of maintaining a continuous airflow through the unit at the rate that is used during the purge operation.

(B) The rate that is used during the purge operation shall be maintained throughout the start-up and initial load-carrying period of operation until such time as more fuel and air are needed, which means that the same number of burner registers or burner dampers needed for purging the boiler shall be left open throughout the starting sequence.

6.7.5.1.5.6 Burner Operation.

(A) Burners shall not be placed in service or removed in a random pattern but in a sequence defined by operating instructions and verified by actual experience with the unit, to minimize laning or stratification of fuel or combustion products.

(B) Burners shall be placed in service as necessary, with fuel flows and individual register or damper settings positioned for light-off according to an established operating procedure.

(C) The fuel pressure at the burner header shall be permitted to be used as a guide in maintaining the necessary fuel flow for each burner and shall be maintained automatically within prescribed limits as additional burners are placed in service.

(D) The total number of burners placed in service shall be that number necessary to accomplish the following:

(1) Raise the boiler pressure and temperature
(2) Carry the initial load on the unit

(E) If some registers have been maintained in the closed position, these registers shall not be opened without either readjusting the total airflow to maintain the same burner airflow or closing an equal number of registers on idle burners to obtain the same effect.

(F) The total furnace air throughput shall not be reduced below the minimum purge air flow rate established by the designer in accordance with 6.4.2.3.4.4(A).

Copyright 2014 National Fire Protection Association (NFPA). Licensed, by agreement, for individual use and download on October 4, 2014 to LEADER and READER for designated user PATTARAPORN SRITRAKOOL. No other reproduction or transmission in any form permitted without written permission of NFPA. For inquires or to report unauthorized use, contact licensing@nfpa.org.

6.7.5.1.5.7 The open-register light-off and purge procedure shall be used to maintain airflow at or above the designer-established minimum purge rate during all operations of the boiler.

(A) The open-register purge procedure shall include the following:

(1) Use of a minimum number of required equipment manipulations, thereby minimizing exposure to operating errors or equipment malfunction
(2) Creation of a fuel-rich condition at individual burners during their light-off
(3) Creation of an air-rich furnace atmosphere during light-off and warm-up by maintaining total furnace airflow at the same rate as that needed for the unit purge

(B) This procedure shall incorporate the following:

(1) All the registers necessary to establish airflow at or above purge rate and uniform flow distribution throughout the furnace placed in a predetermined open position
(2) Overfire air port dampers placed in a predetermined position and providing a purge of the overfire air system
(3) A unit purge completed with the burner air registers and overfire air ports in the position specified in 6.7.5.1.5.7(B)(1) and 6.7.5.1.5.7(B)(2)
(4) Prior to being placed into service, purge components (e.g., precipitators, fired reheaters) containing sources of ignition energy for either (a) a period of not less than 5 minutes or (b) five volume changes of that component, whichever is longer
(5) Common component(s) between the furnace outlet and the stack shared with other operating boilers bypassed for unit purge
(6) The first burner or group of burners lighted without any change in the airflow setting, overfire air control damper position, or burner air register position [except as permitted in 6.7.5.2.1.3(B)(9)]

(C) Each boiler shall be tested during initial start-up to determine whether any modifications to the procedure specified in 6.7.5.1.5.7 are required to establish ignition or to satisfy other design limitations during light-off and warm-up.

(D) For boilers that are purged with the registers in their normal operating position, it shall be allowed to momentarily close the registers of the burner being lighted, if proven necessary to establish ignition.

(E) Modifications in the basic procedure shall be allowed only if they have been proven to be necessary to obtain light-off.

(F) However, 6.7.5.1.5.7(A)(1) shall always be followed, thereby satisfying the basic objectives in 6.7.5.1.5.7(B).

6.7.5.1.5.8 Modification to the mode of operation due to water, steam, and flue gas temperatures being outside the established limits in the economizers and superheaters shall be made only after it has been determined to be necessary by operating experience.

6.7.5.2 Functional Requirements.

6.7.5.2.1 Cold Start. This subsection shall cover the requirements for placing oil in service as the initial fuel being fired. Subsection 6.7.5.2.6 shall cover the requirements for placing fuel oil in service as a subsequent fuel.

6.7.5.2.1.1 Preparation for starting shall include a thorough inspection that shall verify the following:

(1) The furnace and flue gas passages are free of foreign material and not in need of repair.
(2)*The bottom of the furnace, including the ash hopper, is free of accumulations of liquid fuel, fuel gases, or vapors prior to each start-up.
(3) All personnel are evacuated from the unit, and associated equipment and all access and inspection doors are closed.
(4) All airflow and flue gas flow control dampers have been operated through their full range to check the operating mechanism and then are set at a position that allows the fans to be started at a minimum airflow and without overpressuring any part of the unit.
(5) All individual burner dampers or registers that are subject to adjustment during operations have been operated through their full range to check the operating mechanism.
(6) The drum water level is established in drum-type boilers, and circulating flow is established in forced circulation boilers or minimum water flow is established in once-through boilers.
(7) The oxygen analyzer(s) and combustibles analyzer(s), if provided, are operating as designed, and a sample has been obtained. The combustibles indication is at zero, and the oxygen indication is at maximum.
(8) All individual burner safety shutoff valves are proven closed, and all sparks are de-energized.
(9) Fuel gas ignition systems meet the requirements of Section 6.6.
(10) The circulating valve, or the fuel oil main safety shutoff valve if a circulating valve is not provided, shall be permitted to be open to provide and maintain hot oil in the burner headers.
(11) The burner guns are checked to ensure that the correct burner tips or sprayer plates and gaskets are in place to provide a safe operating condition.
(12) The burner elements and igniters are positioned in accordance with the manufacturer's specification.
(13) Energy is supplied to the control system and to interlocks.
(14) The meters or gauges indicate fuel header pressure to the unit.
(15) A complete functional check of the interlocks has been made after an overhaul or modification of the interlock system.
(16)*An operational test of each igniter has been made. The test shall be integrated into the starting sequence and shall follow the unit purge and precede the admission of any main fuel.
(17) Individual igniters or groups of igniters also shall be permitted to be tested while the unit is in service. Such tests shall be made with no main fuel present in the igniter's associated burner, and the burner air register shall be in its start-up or light-off position as described in the established operating procedure.
(18)*Units with a history of igniter unreliability shall require additional test routines to verify the continuing operating ability of igniters and ignition system components.

6.7.5.2.1.2 Where provided, regenerative air heaters and gas recirculation fans shall be operated during all operations of the unit in a manner recommended by the boiler manufacturer.

Copyright 2014 National Fire Protection Association (NFPA). Licensed, by agreement, for individual use and download on October 4, 2014 to LEADER and READER for designated user PATTARAPORN SRITRAKOOL. No other reproduction or transmission in any form permitted without written permission of NFPA. For inquires or to report unauthorized use, contact licensing@nfpa.org.

6.7.5.2.1.3* Starting Sequence.

(A) Operation of regenerative-type air heaters, precipitators, and gas recirculation fans shall be included in the start-up sequence in accordance with the manufacturer's recommendations.

(B) The starting sequence shall be performed in the following order:

(1) An open flow path from the inlets of the FD fans through the stack shall be verified.
(2) An ID fan, if provided, shall be started, and the following shall be performed:
  (a) An FD fan then shall be started.
  (b) Additional ID fans or FD fans shall be started in accordance with 6.5.3, as necessary, to achieve purge flow rate.
(3) Dampers and burner registers shall be opened to the purge position in accordance with the open register purge method objectives outlined in 6.7.5.1.5.7.
(4) The airflow shall be adjusted to purge airflow rate, and the following shall be performed:
  (a) A unit purge
  (b) Special provisions as necessary to prevent the hazardous accumulation of volatile vapors that are heavier than air or to detect and purge accumulations in the furnace ash pit
(5) It shall be determined that the oil temperature or viscosity is within predetermined limits to ensure that atomization will occur. The circulating valve and throttle recirculating valve, if necessary, shall be closed to allow establishment of burner header pressure within manufacturer's limits as specified in 6.7.5.2.1.3(B)(7).
(6) The main fuel control valve shall be closed and the main safety shutoff valve(s) shall be open, but only after the requirements of 6.7.5.1.3 for leak test requirements and 6.4.2.3.4 for permissive conditions in the unit purge system have been satisfied.
(7) It shall be determined that the main fuel control valve is closed, and the following procedures shall be performed:
  (a) The main fuel bypass control valve, if provided, then shall be set to maintain the necessary burner header pressure for light-off.
  (b) The main fuel control valve shall be opened when necessary.
(8) For fuel gas– or fuel oil–fired igniters, the igniter safety shutoff valve(s) shall be opened, and the following shall be performed:
  (a) It shall be confirmed that the igniter fuel control valve is holding the manufacturer's recommended fuel pressure necessary for the igniter to operate at design capacity.
  (b) Fuel gas igniter headers shall be vented in order to be filled with fuel gas and to provide a flow (if necessary) so that the igniter fuel control valve functions to regulate and maintain the pressure within design limits specified by the manufacturer for lighting the igniters.
  (c) For gas igniters, the time needed to vent for control of header pressure after header charging shall be evaluated and minimized.
(9) The air register or damper on the burner selected for light-off shall be adjusted to the position recommended by the manufacturer or the established operating procedure, in accordance with 6.7.5.1.5.7(C) through 6.7.5.1.5.7(F).
(10) The spark or other source of ignition for the igniter(s) on the burner(s) to be lit shall be initiated, and the procedure shall continue as follows:
  (a) The individual igniter safety shutoff valve(s) shall be opened, and all igniter system atmospheric vent valves (fuel gas igniters only) shall be closed.
  (b) If flame on the first igniter(s) is not established within 10 seconds, the individual igniter safety shutoff valve(s) shall be closed, and the cause of failure to ignite shall be determined and corrected.
  (c) With airflow maintained at purge rate, repurge shall not be required, but at least 1 minute shall elapse before a retrial of this or any other igniter is attempted.
  (d) Repeated retrials of igniters without investigating and correcting the cause of the malfunction shall be prohibited.
(11) Where Class 3 special electric igniters are used, the procedures described in 6.7.5.2.1.3(B)(1) through 6.7.5.2.1.3(B)(7), 6.7.5.2.1.3(B)(9), and 6.7.5.2.1.3(B)(12) through 6.7.5.2.1.3(B)(14) shall be used, consistent with the requirements for individual main burner flame supervision.
(12) After making certain that the igniter(s) is established and is providing the required level of ignition energy for the main burner(s), the following shall be performed:
  (a) The individual burner safety shutoff valve(s) shall be opened.
  (b) Except where associated Class 1 igniters are in service, a master fuel trip shall be initiated when the flame detection system(s) indicates that ignition has not been obtained within 5 seconds of the time the main fuel actually begins to enter the furnace.
  (c) Purging shall be repeated, and the conditions that caused the failure to ignite shall be corrected before another light-off attempt is made.
  (d) For the following burner and all subsequent burners placed in operation, failure to ignite or loss of ignition for any reason on any burner(s) shall cause fuel flow to that burner(s) to stop.
  (e) All conditions required by the manufacturer and established operating procedures for light-off shall exist before the burner(s) is restarted.
(13) After stable flame is established, the air register(s) or damper(s) shall be adjusted slowly to its operating position, making certain that ignition is not lost in the process. With automatic burner management systems, the air register shall be permitted to be opened simultaneously with the burner safety shutoff valve.
(14) Class 3 igniters shall be shut off at the end of the time trial for proving the main flame, and the following shall be verified:
  (a) That the stable flame continues on the main burners after the igniters are shut off
  (b) That systems that allow the igniters to remain in service on either an intermittent or a continuous basis have been tested to meet all the requirements of Class 1 igniters or Class 2 igniters with associated interlocks in service

Copyright 2014 National Fire Protection Association (NFPA). Licensed, by agreement, for individual use and download on October 4, 2014 to LEADER and READER for designated user PATTARAPORN SRITRAKOOL. No other reproduction or transmission in any form permitted without written permission of NFPA. For inquires or to report unauthorized use, contact licensing@nfpa.org.

(15) The sequence shall continue as follows:
  (a) The procedures of 6.7.5.2.1.3(B)(9) through 6.7.5.2.1.3(B)(14) shall be followed for placing additional burners with open registers in service, as necessary, to raise steam pressure or to carry additional load.
  (b) If used, automatic control of burner fuel flow and burner airflow during the lighting and start-up sequence shall be in accordance with the requirements of 6.7.5.2.1.3(B)(18).
  (c) The fuel flow to each burner (as measured by burner fuel header pressure) shall be maintained at a controlled value that is compatible with the established airflow through the corresponding burner.
  (d) The established airflow through each open register shall be permitted to be maintained by controlling the windbox-to-furnace differential.
  (e) Total furnace airflow shall not be reduced below purge rate airflow and shall be at least that which is necessary for complete combustion in the furnace.
  (f) If it is necessary to vary fuel header pressure to eliminate a problem of having excessive lighting off and shutting down of burners, such variations shall be limited to a predetermined range.
  (g) This range shall be a function of the incremental fuel input that is added by the lighting of a single burner or gang of burners.

(16) After a predetermined number of burners that allow control of header fuel flow and temperature have been placed in service, the recirculating valve shall be closed unless the system is designed for continuous recirculation.

(17) The maximum number of burners shall be placed in service consistent with the anticipated continuous load and the operating range of fuel header pressures.

(18) The on-line metering combustion control (unless designed specifically for start-up procedures) shall not be placed into service until the following have occurred:
  (a) A predetermined minimum main fuel input has been attained.
  (b) All registers on nonoperating burners are closed, unless compensation is provided by the control system.
  (c) The burner fuel and airflow are adjusted as necessary.
  (d) Stable flame and specified furnace conditions have been established.

(19) It shall be permitted to place a multiple number of igniters in service that are served simultaneously from a single igniter safety shutoff valve, provided that the igniters are reliably supervised, so that failure of one of the group to light causes the fuel to all igniters in the group to shut off.

(20) It shall be permitted to place a multiple number of burners served by their corresponding multiple igniters from a single burner safety shutoff valve in service simultaneously, provided that the burners are reliably supervised, so that failure of one of the group to light causes the fuel to all burners in the group to shut off.

(21) On units with an overfire air system, the overfire air control damper position shall be permitted to be changed only when repositioning of all burner air registers or burner air dampers is permitted.

(22) On units with an overfire air system, the boiler shall be operating in a stable manner before the overfire air is introduced.

(23) On units with an overfire air system, the boiler shall be operating in a stable manner before the overfire air is introduced. The introduction of the overfire air shall not adversely affect boiler operation.

(24) A reburn system shall be placed in service only after the following have occurred:
  (a) The boiler shall be operating at a load that ensures the introduction of the reburn fuel will not adversely affect continued boiler operation.
  (b) The temperature in the reburn zone shall be maintained in accordance with 6.7.3.5.2.
  (c) The boiler shall be operating in a stable manner before the reburn start-up sequence is initiated.

6.7.5.2.2 Functional Requirements: Normal Operation.

6.7.5.2.2.1 The firing rate shall be regulated by increasing or decreasing the fuel and air supply simultaneously to all operating burners, maintaining air-fuel ratio within predetermined operating limits continuously at all firing rates.

(A) This procedure shall not eliminate requirements for air lead and lag during changes in the fuel firing rate.

(B) This requirement shall not apply to systems provided with metering of air and fuel to each burner and designed specifically for individual burner-modulating control.

6.7.5.2.2.2 The reburn injection rate shall be regulated within the design limits of the reburn equipment.

(A) Airflow lead and lag shall be used during changes in the reburn fuel injection rate.

(B) Reburn safety shutoff valves shall be fully open or completely closed.

(C) Intermediate settings shall not be used.

6.7.5.2.2.3 The firing rate shall not be regulated by varying the fuel to individual burners by means of the individual burner safety shutoff valve(s).

(A) The individual burner safety shutoff valve(s) shall be fully open or completely closed.

(B) Intermediate settings shall not be used.

6.7.5.2.2.4 Air registers shall be set at the firing positions as determined by tests, except in systems provided with metering of air and fuel to each burner and designed specifically for individual burner modulating control.

6.7.5.2.2.5 The burner fuel and airflow shall be maintained within a range between the maximum and minimum limits as determined by trial or, if trial results do not exist, as specified by the combustion equipment manufacturer(s).

(A) These trials shall test for minimum and maximum limits and stable flame under each of the following conditions:

(1) With all fuel oil burners in service and combustion control on automatic
(2) With different combinations of fuel oil burners in service and combustion control on automatic
(3) With different combinations of fuel gas, fuel oil, and coal burners in service and combustion controls on automatic
(4) With minimum and maximum reburn flow rates
(5) With each reburn fuel injection pattern
(6) With overfire air operating at its minimum and maximum limits

Copyright 2014 National Fire Protection Association (NFPA). Licensed, by agreement, for individual use and download on October 4, 2014 to LEADER and READER for designated user PATTARAPORN SRITRAKOOL. No other reproduction or transmission in any form permitted without written permission of NFPA. For inquires or to report unauthorized use, contact licensing@nfpa.org.

(B) Where changes occur to any of the minimum and maximum limits because of equipment modifications, operating practices, or fuel conditions, retesting shall be required.

6.7.5.2.2.6 Loss of Individual Burner Flame.

(A) On loss of an individual burner flame, that individual burner's safety shutoff valve shall be automatically closed.

(B) The burner register shall be closed if it interferes with the air-fuel ratio supplied to any other individual burner flame.

6.7.5.2.2.7 Total airflow shall not be reduced below the minimum purge rate established by the designer in accordance with 6.4.2.3.4.4.

6.7.5.2.3 Functional Requirements: Normal Shutdown. The requirements in 6.7.5.2.3 shall apply to the removal of fuel oil from service as the only main burner fuel being fired, and the requirements in 6.7.5.2.7 shall apply to removal of fuel oil from service with other fuel remaining in service.

6.7.5.2.3.1 When taking the unit out of service, the boiler load shall be reduced to that necessitating a purge rate airflow, while maintaining operation within the tested limits determined in 6.7.5.2.2.5.

6.7.5.2.3.2 Prior to removal of fuel oil from service and prior to the loss of reburn permissives, reburn fuel shall be shut down as specified in 6.6.5.2.9, 6.7.5.2.9, or 6.8.5.2.9.

6.7.5.2.3.3 The metering combustion control shall be taken out of service, and the start-up fuel supply pressure, register settings, and airflows shall be established in accordance with written start-up procedures.

6.7.5.2.3.4 Where designed for start-up and shutdown procedures, the metering combustion control shall not be required to be taken out of service.

6.7.5.2.3.5 As the fuel is reduced, a sequential shutdown of the burners shall be accomplished by closing the individual burner safety shutoff valves.

6.7.5.2.3.6 Each burner shall be shut down in the following sequence:

(1) The igniter shall be placed into service on the particular burner to be shut down.
(2) With the igniter in service, the burner safety shutoff valve shall be closed and the steam (or air) clearing valves shall be opened.
(3) The clearing steam (or clearing air) shall be left in service a predetermined length of time that has been proven adequate to remove all fuel oil so as to ensure there will be no carbonization and plugging of the burner tip.
(4) The igniter shall be removed from service, and the fuel oil gun shall be removed or retracted unless cooling is provided.
(5) If the fuel oil passages of the igniter are to be cleared into the furnace, the spark or other ignition source for the igniter shall be initiated before opening the steam (or air) clearing valve.
(6) Registers shall be placed in the position prescribed by the established operating procedure(s).

6.7.5.2.3.7 As the fuel is reduced, the remaining burners shall be shut down sequentially as described in 6.7.5.2.3.5 and 6.7.5.2.3.6 except that the last burner shall not be scavenged unless an associated Class 1 or 2 igniter is in use.

6.7.5.2.3.8 When the last individual burner safety shutoff valve is closed, the main safety shutoff valve shall be checked to confirm that it has closed.

6.7.5.2.3.9 When all burners, igniters, and the reburn system have been removed from service, the purge rate airflow shall be verified, and a unit purge shall be performed.

6.7.5.2.3.10 After completion of the unit purge, closing the burner air registers and shutting down the FD fans and ID fans shall be permitted to be optional; however, maintaining airflow through the unit to prevent accumulation of combustible gases is a prudent procedural step due to the potential of fuel leak-by.

6.7.5.2.3.11 Leakage of main or igniter fuel into the furnace or windbox shall be prevented.

6.7.5.2.3.12 If fuel recirculation in the burner header is to be established, the following shall be completed:

(1) Confirmation that individual burner safety shutoff valves are closed and that flame is out on each burner
(2) Confirmation that the main safety shutoff valve is closed
(3) Opening of circulating valve and recirculating valve

6.7.5.2.4 Functional Requirements: Normal Hot Restart.

6.7.5.2.4.1 When restarting a hot unit, the requirements of 6.7.5.2.1.1(6) through 6.7.5.2.1.1(14) for a cold start shall be met.

6.7.5.2.4.2 The starting sequence in 6.7.5.2.1.3 shall be followed.

6.7.5.2.5 Emergency Shutdown — Master Fuel Trip.

6.7.5.2.5.1 An emergency shutdown shall initiate a master fuel trip.

6.7.5.2.5.2 Mandatory Automatic Master Fuel Trips.

(A) Interlocks shall be installed in accordance with 6.4.2 and 6.5.4.

(B) A master fuel trip shall result from any of the following conditions:

(1) Fuel and atomizing medium (if provided) to the burners outside the operating limits necessary to accomplish atomization as established by trial or by the burner manufacturer and no other fuel is proven in service. If another fuel is proven in service, this shall cause a fuel oil fuel trip, but not a master fuel trip.
(2) Total airflow decreases below the minimum purge rate airflow as required in 6.4.2.3.4.4(A) by 5 percent design full load airflow.
(3) Loss of either all ID fans or all FD fans.
(4) Loss of all flame.
(5) Partial loss of flame predetermined to be likely to introduce a hazardous accumulation of unburned fuel in accordance with Table 6.4.2.3.1(a), block 8.
(6) Furnace pressure in excess of the prescribed operating pressure by a value specified by the manufacturer.
(7) All fuel inputs shut off in accordance with Table 6.4.2.3.1(a), block 9.

6.7.5.2.5.3 Mandatory Master Fuel Trips with Alarms — Not Necessarily Automatically Initiated. A master fuel trip shall result from any of the following conditions:

(1) Loss of energy supply for boiler control, burner management, or interlock systems

Copyright 2014 National Fire Protection Association (NFPA). Licensed, by agreement, for individual use and download on October 4, 2014 to LEADER and READER for designated user PATTARAPORN SRITRAKOOL. No other reproduction or transmission in any form permitted without written permission of NFPA. For inquires or to report unauthorized use, contact licensing@nfpa.org.

(2) Furnace negative pressure in excess of the value specified by the manufacturer *[See 6.4.2.3.6.5.]*

6.7.5.2.5.4 A master fuel trip that results from any of the emergency conditions tabulated in 6.7.5.2.5.2 and 6.7.5.2.5.3 shall stop all fuel flow to the furnace from all burners and the reburn system by tripping the main and individual burner safety shutoff valves and the main and individual reburn safety shutoff valves.

(A) The igniter safety shutoff valve and individual igniter safety shutoff valves shall be tripped, and the igniter sparks shall be de-energized.

(B) If a furnace inerting system is installed, the inerting system shall be operated simultaneously with the master fuel trip.

(C) Master fuel trips shall operate in a manner to stop all fuel flow into the furnace within a period of time that does not allow a dangerous accumulation of fuel in the furnace.

(D) A master fuel trip shall not initiate a forced draft or induced draft fan trip.

(E) Electrostatic precipitators, fired reheaters, or other ignition sources shall be tripped.

(F) Clearing of fuel oil passages into the furnace immediately following an emergency trip shall not be permitted.

6.7.5.2.5.5 Following a master fuel trip, the unit shall be purged in accordance with 6.4.2.3.4.

6.7.5.2.5.6 Following the completion of a unit purge, one burner (or group of burners) at a time shall be permitted to be placed in service in a manner specified in 6.7.5.2.1.3.

(A) Fuel oil passages then shall be permitted to be cleared into the furnace from each burner when the igniter has been established for that burner.

(B) After each burner is cleared, its igniter shall be permitted to be shut down.

6.7.5.2.6 Starting Sequence — Second Fuel.

6.7.5.2.6.1 When starting fuel oil as a second fuel, the requirements of 6.7.5.2.1.1(8) through 6.7.5.2.1.1(14) shall be satisfied, and the total heat input shall be limited as described in 6.6.5.1.4.

6.7.5.2.6.2 The starting sequence of the first fuel (gas or coal) shall be complete, and the starting sequence of the second fuel (oil) shall be performed in the following order:

(1) The main fuel oil control valve shall be closed and the main safety shutoff valve(s) shall be opened, but only after leak test requirements in 6.6.5.1.3 have been met.
(2) The starting sequence in 6.7.5.2.1.3(B)(7) through 6.7.5.2.1.3(B)(20) shall be followed.

Exception: For sequence 6.7.5.2.1.3(B)(12), where fuel oil is the second fuel to be placed in service, a fuel oil trip shall be initiated when the flame detection system(s) indicates that ignition has not been obtained within 5 seconds of the time the fuel actually begins to enter the furnace. A master fuel trip shall not be required.

6.7.5.2.7 Shutdown Sequence — Second Fuel. The requirements in 6.7.5.2.7 shall apply to the removal of fuel oil from service with other main burner fuel remaining in service, and the requirements in 6.7.5.2.3 shall apply to the removal of fuel oil from service as the only main burner fuel being fired.

6.7.5.2.7.1 When shutting off fuel oil with fuel gas or coal remaining in service, a sequential shutdown of the fuel oil burners shall be accomplished by the following sequence:

(1) The igniter shall be placed into service on the particular burner to be shut down.
(2) With the igniter in service, the burner safety shutoff valve shall be closed, and the steam (or air) clearing valves shall be opened.
(3) The clearing steam (or clearing air) shall be left in service a predetermined length of time that has been proven adequate to remove all fuel oil so as to ensure there will be no carbonization or plugging of the burner tip.
(4) The igniter shall be removed from service, and the fuel oil gun shall be removed or retracted unless cooling is provided.

6.7.5.2.7.2 The remaining burners shall be shut down sequentially as previously described, leaving the registers in the position prescribed by the established operating procedure.

6.7.5.2.7.3 When the last individual burner safety shutoff valve is closed, the main safety shutoff valve shall be closed.

6.7.5.2.8 Reburn System Start.

6.7.5.2.8.1 The reburn system shall not be started until the requirements in 6.7.3.5.2 have been met and shall follow the prerequisites in 6.7.5.2.1.3(B)(24).

6.7.5.2.8.2* The furnace temperature characteristics as a function of heat input, steam flow, or other reliable control signal shall be utilized as a permissive to initiate the reburn fuel injection.

6.7.5.2.8.3 If the reburn system admits reburn fuel through burners, then the starting sequence shall also follow that specified for burners in 6.7.5.2.1.3(B)(6) through 6.7.5.2.1.3(B)(14).

6.7.5.2.8.4 If the reburn system admits reburn fuel by means other than through burners, then the starting sequence shall incorporate the following:

(1) Inclusion of all reburn operation permissives required by this chapter
(2) Following of the procedure specified by the manufacturer of the reburn system

6.7.5.2.9 Shutdown Sequence — Reburn Fuel.

6.7.5.2.9.1 If the reburn system admits reburn fuel through burners, the shutdown sequence shall follow that specified for burners in 6.7.5.2.3.

6.7.5.2.9.2 If the reburn system admits reburn fuel by means other than through burners, the shutdown sequence shall be as follows:

(1) Reduce the reburn fuel flow to minimum.
(2) Close individual reburn shutoff valves.
(3) Open the reburn steam (or air) clearing valves. Leave the clearing valves open until all fuel oil has been removed from the reburn atomizer tip.
(4) Close the main reburn safety shutoff valve(s).
(5) Retract the reburn system from service, or place reburn cooling in service, if equipped.

6.7.5.3 Emergency Conditions Not Requiring Shutdown or Trip.

6.7.5.3.1 In the event of a loss of a fan or fans for unit installations with multiple ID fans, FD fans, or both, the control

Copyright 2014 National Fire Protection Association (NFPA). Licensed, by agreement, for individual use and download on October 4, 2014 to LEADER and READER for designated user PATTARAPORN SRITRAKOOL. No other reproduction or transmission in any form permitted without written permission of NFPA. For inquires or to report unauthorized use, contact licensing@nfpa.org.

system shall be capable of reducing the fuel flow to match the remaining airflow; otherwise, tripping of the unit shall be mandatory.

6.7.5.3.2* If an air deficiency develops while flame is maintained at the burners, the fuel shall be reduced until the air-fuel ratio has been restored to within predetermined, acceptable limits; if fuel flow cannot be reduced, the airflow shall be increased slowly until the air-fuel ratio has been restored to within those limits.

6.7.5.3.3 Burners with poor atomization shall be shut down. If a predetermined number, as outlined in an established operating procedure, are so affected as to introduce a hazardous condition, all fuel shall be tripped.

6.7.6* Boiler Front Control (Supervised Manual). Supervised manual operation shall not apply to new construction.

6.7.7 Two-Burner Systems — Single Fuel Flow Control.

6.7.7.1 Fundamental Principles.

6.7.7.1.1* Two-burner boilers that are served by a single fuel flow control valve and a single airflow control damper and provided with fuel safety shutoff valves for each burner shall meet the special design and operating requirements of 6.7.7.

6.7.7.1.2 Subsection 6.7.7 shall not apply to two-burner boilers with separate air-fuel ratio controls that consist of a fuel flow control valve and an airflow control damper for each burner and that provide independent burner operation.

6.7.7.1.3 Subsection 6.7.7 shall not apply to two burners that are lighted off, operated, and shut down in unison as a single burner, with common fuel and airflow controls and fuel safety shutoff valves. Such systems shall be in accordance with Chapter 5, 6.7.5.2.1.3(B)(19), and 6.7.5.2.1.3(B)(20).

6.7.7.2 System Requirements.

6.7.7.2.1 The control system design options in 6.7.7.2.1.1 and 6.7.7.2.1.2 shall be provided in order to maintain the air-fuel ratio within the manufacturer's suggested limits on one burner in the event of an automatic trip of the other burner.

6.7.7.2.1.1 A flame failure signal at one of the two burners shall initiate one of the following immediately and automatically:

(1) A master fuel trip
(2)*A trip of the individual fuel safety shutoff valve(s) for the failed burner and a reduction of total boiler fuel flow by 50 percent of the flow prior to the trip without reducing total boiler airflow or individual burner airflow, this action to be accomplished by correcting the burner header fuel pressure to the value at which it had been operating prior to the trip of the first burner
(3) A trip of the individual fuel safety shutoff valve(s) for the failed burner and simultaneous shutoff of the air supply to that burner, the fuel input to the operating burner not exceeding the established maximum firing rate or the manufacturer's suggested air-fuel ratio limits of the burner

6.7.7.2.1.2 The automatic recycling mode of operation shall be prohibited.

6.7.7.2.2 Burner Light-Off Procedures. The following operating procedures shall be followed to prevent air-fuel ratio upsets during burner light-off:

(1) Prior to light-off of the first burner, the furnace shall be purged with airflow through both burner registers at purge rate.
(2) When the first burner is being lit, the registers in the second burner shall be left open to the purge position.
(3) The operator shall observe main flame stability while making any register or burner damper adjustments.
(4) During and after the light-off of the second burner, the operator shall observe flame stability on the first burner.
(5) If a boiler is operating on one burner with the air supply closed off to the other burner and it becomes necessary to light the second burner, established operating procedures shall be used to prevent creating a hazardous air-fuel ratio at the first operating burner. The following general procedures shall be performed to prevent air starvation of the operating burner when air is introduced to the idle burner in preparation for its light-off:
    (a) Before any air is admitted to the idle burner, the excess air on the operating burner shall be increased by either increasing airflow while holding fuel flow constant or reducing fuel flow while holding airflow constant.
    (b) The register or damper at the idle burner shall be opened slowly while the effect on the operating burner is continuously observed and any adjustments to fuel flow or total boiler airflow necessary to maintain a stable flame are made.
    (c) After the second burner has been lit, flame stability shall be confirmed at both burners before control is transferred to the combustion control system.
(6) Where the two burners are not equipped with individual burner air registers or dampers, 6.7.7.2.2(5) shall not apply. Total boiler airflow shall be maintained so that the operating burner's air-fuel ratio stays within the manufacturer's suggested limits.

6.7.7.3 Fuel Transfer Procedure.

6.7.7.3.1 An operating procedure, either manual or automatic, that prevents a hazardous air-fuel ratio at either burner when a fuel transfer is made shall be followed.

6.7.7.3.2 The following procedure shall be performed:

(1) Total fuel and airflow shall be reduced to within the design capacity of one burner.
(2) Both fuel and air to the burner on which fuels are to be transferred shall be shut off simultaneously.
(3) The burner shall be restarted on the new fuel in accordance with the procedures in 6.7.7.2.2(5).

6.8 Pulverized Coal Systems.

6.8.1 General.

6.8.1.1 The requirements in Section 6.8 and Chapter 9 shall apply to installations where pulverized coal is supplied.

6.8.1.2 Although the pulverized coal section of this code emphasizes direct-fired systems, it shall also apply to bin systems.

6.8.2 Coal Firing — Special Problems. See Section K.5.

6.8.2.1* In addition to the common hazards involved in the combustion of solid, liquid, and gaseous fuels, the following special hazards related to the physical characteristics of pulverized coal shall be addressed in the design of the firing systems:

(1)*Each coal processing subsystem shall be designed and operated in accordance with Chapter 9 of this code.

Copyright 2014 National Fire Protection Association (NFPA). Licensed, by agreement, for individual use and download on October 4, 2014 to LEADER and READER for designated user PATTARAPORN SRITRAKOOL. No other reproduction or transmission in any form permitted without written permission of NFPA. For inquires or to report unauthorized use, contact licensing@nfpa.org.

(2)*Coal bunkers and other enclosed spaces shall be designed to prevent accumulation of methane gas.

(3)*Coal burners shall be removed from service in a predetermined manner.

(4)*Pulverized coal dust shall be prevented from accumulating in pulverizer air ducts. Means shall be provided to prevent the reverse flow of furnace gases into idle burners or pulverizers.

(5)*To prevent ignition or settling of pulverized coal in burner pipes, the transport air velocity in all burner pipes shall be maintained at or above a predetermined minimum value during operation and while purging the pipes during the shutdown procedure. This minimum value shall be established by the manufacturer and verified by tests.

Exception: Transport air shall not be maintained during an emergency trip condition.

(6)*The temperature of the coal-air mixture leaving the pulverizer shall be maintained within the limits specified by the pulverizer and burner manufacturer(s) for the type of coal being burned.

(7) To minimize explosions in the pulverizer or burner pipes, provision shall be made for cooling down and emptying the pulverizers as part of the process of shutting down the associated burners. If the pulverizer is tripped under load, the clearing procedure outlined in 6.8.5.2.10 shall be followed to prevent spontaneous combustion and a possible explosion in the pulverizer or burner pipes.

6.8.2.2 Coal Burner Turndown Ratio.

6.8.2.2.1 The additional requirements in 6.8.2.2.2 and 6.8.2.2.3 shall be addressed within the burner design parameters in 6.8.3.2.2, which determine the range of burner operation for stable flame.

6.8.2.2.2* Minimum firing rates shall be established for the range of volatility and fineness expected.

6.8.2.2.3* The turndown ratio for extended reduced load operation shall be determined for the full range of coals to be fired.

CAUTION: When the boiler is operating with pulverized coal for an extended time at reduced loads, incomplete combustion causes large quantities of unburned combustible dust to settle in hoppers and on horizontal surfaces. Do not disturb this dust by rapidly increasing airflow or by sootblowing.

6.8.2.3 Effect of Turndown Ratio on Open Register Light-Off.

6.8.2.3.1* Coal burners shall light off at their predetermined minimum stable load.

6.8.2.3.2* The burner and pulverizer turndown ratio shall be tested to determine the impact of burner throat size, number of spare pulverizers, and coal quality.

6.8.2.3.3* The windbox-to-furnace differential shall be maintained at levels required for fuel and air turbulence through the use of burner registers.

6.8.2.3.4 Registers shall be opened to the predetermined firing position.

6.8.2.3.5 The basic objectives of an open register light-off as set forth in 6.8.5.1.5.7 shall be met.

6.8.2.3.6 Variation in light-off procedure shall be permitted in accordance with the turndown ratio and other requirements listed in 6.8.2.3.1 through 6.8.2.3.5.

6.8.3 System Requirements.

6.8.3.1 Fuel Supply Subsystem — Coal. *(See Figure A.6.8.5.1.5.4(a) through Figure A.6.8.5.1.5.4(c), which show the typical coal firing equipment arrangements on which the text in this code is based.)*

6.8.3.1.1 Raw Coal Supply Subsystem.

6.8.3.1.1.1 The raw coal supply subsystem shall be sized to satisfy the design requirements and arranged to ensure a continuous, steady fuel flow over all operating requirements of the unit.

6.8.3.1.1.2 The unloading, storage, transfer, and preparation facilities for raw coal shall be designed and arranged to size the coal, to remove foreign material, and to minimize interruption of the coal supply to the coal feeders, which shall include, where necessary, the installation of breakers, cleaning screens, and magnetic separators.

6.8.3.1.1.3 Raw coal feeders shall be designed with a capacity range to allow for variations in size, quality, and moisture content of the coal as specified by the purchaser.

(A) Raw coal piping to and from feeders shall be designed for free flow within the design range of coal size and moisture content.

(B) Means shall be provided for observation and detection of the coal flow.

(C) Access shall be provided for clearing of obstructions and sampling of coal.

6.8.3.1.2 Pulverizer Subsystems.

6.8.3.1.2.1 Coal-pulverizing equipment shall be designed to provide a range of capacity that minimizes starting and stopping of pulverizers during boiler load changes.

6.8.3.1.2.2 Coal-pulverizing equipment shall produce specified coal fineness over the specified design range of coal analyses and characteristics.

6.8.3.1.2.3 Pulverizer systems shall be designed and operated in accordance with Chapter 9.

6.8.3.2 Main Burner Subsystem.

6.8.3.2.1* Stable Flame Limits.

6.8.3.2.1.1 The main burner subsystem shall be designed so that the burner inputs are supplied to the furnace continuously and within their stable flame limits.

6.8.3.2.1.2 Class 1 or Class 2 igniters, as demonstrated by test, shall be permitted to be used to maintain stable flame when operating at the lower operating limits determined in 6.8.3.2.2 and 6.8.3.2.3 for the main fuel subsystem in any given furnace design.

6.8.3.2.2 Tests for Stable Flame Limits. The limits of stable flame for each burner subsystem producing a separate flame envelope shall be determined by tests without the ignition subsystem in service.

6.8.3.2.2.1* These tests shall verify that transients generated in the fuel and air subsystems do not affect the burners adversely during operation.

Copyright 2014 National Fire Protection Association (NFPA). Licensed, by agreement, for individual use and download on October 4, 2014 to LEADER and READER for designated user PATTARAPORN SRITRAKOOL. No other reproduction or transmission in any form permitted without written permission of NFPA. For inquires or to report unauthorized use, contact licensing@nfpa.org.

6.8.3.2.2.2 These tests shall include the expected range of fuels to be fired in the unit.

6.8.3.2.2.3 These tests shall be repeated after any combustion process modification, such as the addition of overfire air, low NO_x burners, and reburn, and after switching to any fuel not previously tested.

6.8.3.2.3 Additional Tests.

6.8.3.2.3.1 Where Class 1 and Class 2 igniters are used, the tests described in 4.7.7.1, 4.7.7.2, and 6.8.3.2.2 shall be performed to determine the limits of stable flame with the igniters in service.

6.8.3.2.3.2 Operation using any extended turndown range from that established in 6.8.3.2.2 shall be permitted only when Class 1 igniters are in service and flame is proved.

6.8.3.2.4 Provisions shall be made for visual observation of conditions at the burner ignition zone and for flame detection equipment.

6.8.3.2.5 Provisions shall be made for cleaning of the burner nozzle and tip.

6.8.3.2.6* Maintenance.

6.8.3.2.6.1 The burner equipment shall be in a location that allows access for maintenance.

6.8.3.2.6.2 The requirements of housekeeping in 4.4.1.2(8) shall be followed to prevent the accumulation of unburned coal.

6.8.3.3 Reserved.

6.8.3.4 Flue Gas Recirculation to Burners.

6.8.3.4.1 When flue gas or other inert gases are introduced to the secondary air or combustion air being supplied to burners, testing shall be used to demonstrate that the methods and devices used provide uniform distribution and mixing.

6.8.3.4.2 The oxygen content of the mixture being supplied to the burners shall not be permitted to go below the limit specified by the burner manufacturer or as proven by tests to provide stable combustion.

6.8.3.4.3 Means shall be provided to monitor either the ratio of flue gas to air or the oxygen content of the mixture.

6.8.3.5 Reburn Fuel Supply Subsystem — Coal.

6.8.3.5.1 The reburn fuel supply equipment shall be designed in accordance with Section 9.4.

6.8.3.5.2 Temperature Tests.

6.8.3.5.2.1 Furnace temperature at the location of reburn fuel injection shall be at least 167°C (300°F) above the autoignition temperature of the reburn fuel and shall be verified by test.

6.8.3.5.2.2 The tests shall be performed for a variety of boiler loads, burner firing configurations, furnace cleanliness conditions, and excess air levels to determine the conditions under which reburn operation shall be permitted.

6.8.3.5.3* Fuel reburn systems shall include either temperature monitoring or reburn flame sensors.

6.8.3.5.4 Fuel reburn systems shall utilize a flue gas combustibles analyzer to detect combustibles.

6.8.4 Flame Monitoring and Tripping System.

6.8.4.1* The flame monitoring philosophy for coal firing shall not require that a consistently detectable flame be maintained at each burner of the flame envelope.

6.8.4.2 Reserved.

6.8.4.3 Regardless of the number or pattern of flame loss indications used for tripping, loss of flame indication on an operating burner or flame envelope shall initiate an alarm that warns the operator of potential hazard.

6.8.4.4 Flame Tripping Validation.

6.8.4.4.1* The flame tripping concepts as described in 6.8.4.4.4 through 6.8.4.4.6 shall be used on units only when the boiler manufacturer has validated that concept for the specific furnace configuration being used.

6.8.4.4.2 This validation shall not be used to replace unit acceptance tests relating to proof of design, function, and components.

6.8.4.4.3 Upon detection of loss of flame on a burner, a pulverizer/burner group, or the furnace as a whole, an automatic trip of the associated equipment shall be initiated as required in 6.8.4.4.4 through 6.8.4.4.6.

6.8.4.4.4* Monitoring with Automatic Tripping of Individual Burners or Burner Groups. Where automatic selective tripping of individual burner nozzles or groups is provided, the related feeder or the pulverizer and feeder shall be tripped when a predetermined number or arrangement of burners served by that pulverizer have tripped.

6.8.4.4.5 Monitoring with Automatic Tripping of Individual Feeder or Pulverizer and Feeder.

6.8.4.4.5.1 Upon detection of loss of flame on a predetermined number or arrangement of burners served by a pulverizer, that feeder or that pulverizer and feeder shall be automatically tripped.

6.8.4.4.5.2 An alarm shall sound upon detection of loss of flame on each burner involved, and the operator shall inspect flame conditions visually to determine whether burner or pulverizer operation should be continued.

6.8.4.4.5.3 The number and arrangement of burners for each pulverizer showing loss of flame that are necessary to automatically initiate a feeder trip or pulverizer and feeder trip shall be determined by the boiler manufacturer as a function of the spatial arrangement of burners and the unit load.

6.8.4.4.5.4 Under circumstances of operation where support between the operating burners does not exist, either from proven igniters or from proven adjacent burners, loss of flame on an individual burner shall automatically initiate a trip of the feeder or the pulverizer and feeder.

6.8.4.4.6 Furnace Tripping. The following conditions shall apply in furnace configurations where individual pulverizer-burner sets are not selectively tripped:

(1) Detectors shall be located and adjusted to monitor specific zones within the furnace.
(2) Under all reasonable operating conditions, main fuel combustion in one zone shall provide sustaining energy to adjacent zones if each zone is not self-sustaining.

Copyright 2014 National Fire Protection Association (NFPA). Licensed, by agreement, for individual use and download on October 4, 2014 to LEADER and READER for designated user PATTARAPORN SRITRAKOOL. No other reproduction or transmission in any form permitted without written permission of NFPA. For inquires or to report unauthorized use, contact licensing@nfpa.org.

(3) Under circumstances of operation where support between zones receiving fuel does not exist, ignition support shall be provided, or, upon loss of flame in a zone or in the entire furnace, the master fuel trip shall be automatically initiated. *[See 6.8.5.2.1.3(B)(17).]*

6.8.4.5 Reburn System.

6.8.4.5.1 The reburn system shall be shut down in accordance with the reburn system manufacturer's requirements if the temperature falls below the limit specified in 6.8.3.5.2.

6.8.4.5.2 The reburn system shall be tripped if the temperature drops to 56°C (100°F) below the limit specified in 6.8.3.5.2.

6.8.4.5.3 Loss of flame shall trip the operation of the reburn system or portions of the reburn system in accordance with the reburn system manufacturer's requirements.

6.8.5 Operations.

6.8.5.1 General Operating Requirements.

6.8.5.1.1 All Conditions.

6.8.5.1.1.1 Prior to starting a unit, action shall be taken to prevent fuel from entering the furnace.

6.8.5.1.1.2 A unit purge shall be completed prior to the starting of a fire in the furnace.

6.8.5.1.1.3 Purge rate shall be not less than 25 percent or more than 40 percent of the design full load mass airflow.

6.8.5.1.1.4 The igniter for the burner shall always be used.

6.8.5.1.1.5 Burners shall not be lighted using a previously lighted burner or from the hot refractory.

6.8.5.1.1.6* Where the boiler is operating at low capacity, a reduced number of pulverizers shall be operated.

6.8.5.1.1.7 When pulverizer or burner line maintenance is being performed with the boiler in service, positive means to isolate the pulverizer or burner line from the furnace shall be used.

6.8.5.1.1.8 Where the pulverizer and burner piping are being cleared into a furnace, the procedures of 6.8.5.2.10 shall apply.

6.8.5.1.1.9 The procedures of Chapter 9 shall apply where dealing with pulverizer equipment fires.

6.8.5.1.2 Sootblowers.

6.8.5.1.2.1 Sootblowers shall be operated only where heat input to the furnace is at a rate high enough to prevent a flameout during the sootblower operation.

6.8.5.1.2.2 Sootblowers shall not be operated at low load and high excess air conditions.

6.8.5.1.2.3 The requirements of 6.8.5.1.2.1 and 6.8.5.1.2.2 shall not preclude the use of wall sootblowers, and high-temperature superheater and reheater sootblowers shall be permitted for cleaning during periods of unit outage if a unit purge has been completed and purge rate airflow is maintained.

6.8.5.1.2.4 The use of air heater sootblowers during start-up shall be permitted.

6.8.5.1.3 Reserved.

6.8.5.1.4 Total Heat Input.

6.8.5.1.4.1 The total heat input in a burner or furnace zone, or both, shall not exceed the maximum limits specified for the equipment by the manufacturer.

6.8.5.1.4.2 The total heat inputs of multiple fuels shall be accounted for where a burner or furnace zone, or both, simultaneously fires more than one fuel.

6.8.5.1.5 Sequencing.

6.8.5.1.5.1 Sequencing shall be required to ensure that operating events occur in the order established by proven operating procedures.

6.8.5.1.5.2 Sequencing shall follow procedures that allow fuel that falls within design specifications to be admitted to the burners only when there is ignition energy and airflow within design minimum requirements needed to ignite the fuel as it enters the furnace.

6.8.5.1.5.3 Sequencing also shall be utilized when burners are removed from operation.

6.8.5.1.5.4* The sequences of operation in 6.8.5 shall be followed whether the unit is operated manually or certain functions are accomplished by interlocks or automatic controls.

6.8.5.1.5.5 The starting and shutdown sequences outlined in 6.8.5 shall be followed to ensure an air-rich furnace atmosphere during start-up and to establish minimum velocities through the furnace to prevent hazardous accumulations of unburned fuel.

(A) The sequence shall provide the required practice of maintaining a continuous airflow through the unit at the rate that is used during the purge operation.

(B) The rate that is used during the purge operation shall be maintained throughout the start-up and initial load-carrying period of operation until such time as more fuel and air are needed, which means that the same number of burner registers or burner dampers needed for purging the boiler shall be left open throughout the starting sequence, as described in the following paragraphs.

6.8.5.1.5.6 Burner Operation.

(A) Burners shall not be placed in service or removed in a random pattern but in a sequence defined by operating instructions and verified by actual experience with the unit in order to minimize laning or stratification of fuel or combustion products.

(B) Pulverizers and burners shall be placed in service as necessary, with fuel flows and individual register or damper settings positioned for light-off according to an established operating procedure.

(C) The pulverizer loading and primary airflow shall be permitted to be used as a guide in maintaining the necessary fuel flow for each burner and shall be maintained within the prescribed limits as follows:

(1) A minimum limit of either a mechanical stop or a control setting shall be provided so that the primary air through the pulverizer and burner lines cannot be reduced below a minimum flow that is found by test to prevent settling in the burner lines. This minimum setting shall not prevent isolation of the pulverizing equipment.
(2)*Every effort shall be made to establish a start-up procedure that permits continuous firing.
(3) Although light-off of all burners associated with a pulverizer is recommended, it is sometimes necessary to operate or light off with fewer than the total number of burners served by the pulverizer. In this event, positive means shall be provided to prevent fuel leakage into idle pulverized coal piping and through idle burners into the furnace.

Copyright 2014 National Fire Protection Association (NFPA). Licensed, by agreement, for individual use and download on October 4, 2014 to LEADER and READER for designated user PATTARAPORN SRITRAKOOL. No other reproduction or transmission in any form permitted without written permission of NFPA. For inquires or to report unauthorized use, contact licensing@nfpa.org.

(4) The associated igniter shall be placed in service prior to admitting coal to any burner.
(5) When the burner(s) and furnace fuel input are within the predetermined prescribed limits necessary to maintain stable flame without the aid of igniters (as determined by test), the igniters shall be permitted to be removed from service.

(D) If some registers have been maintained in the closed position, these registers shall not be opened without either readjusting the total airflow to maintain the same burner airflow or closing an equal number of registers on idle burners to obtain the same effect.

(E) The total furnace air throughput shall not be reduced below the minimum purge air flow rate established by the designer in accordance with 6.4.2.3.4.4(A).

6.8.5.1.5.7 The open-register light-off and purge procedure shall be used to maintain airflow at or above the designer-established minimum purge rate during all operations of the boiler.

(A) The open-register purge procedure shall include the following:

(1) Use of a minimum number of required equipment manipulations, thereby minimizing exposure to operating errors or equipment malfunction
(2) Creation of fuel-rich condition at individual burners during their light-off
(3) Creation of an air-rich furnace atmosphere during the light-off and warm-up by maintaining total furnace airflow at the same rate as that needed for the unit purge
(4) Minimization of the hazard of dead pockets in the flue gas passes and the accumulation of combustibles by continuously diluting the furnace with large quantities of air

(B) This procedure shall incorporate the following operating objectives:

(1) All the registers necessary to establish airflow at or above purge rate and uniform flow distribution throughout the furnace placed in a predetermined open position.
(2) All overfire air port dampers placed in a predetermined position providing a flow of air into the furnace through each overfire air port.
(3) A unit purge completed with the burner air registers and overfire air ports in the position specified in 6.8.5.1.5.7(B)(1) and 6.8.5.1.5.7(B)(2). The purge flow rate shall not be so high as to cause an explosive condition due to stirring up of combustibles smoldering in the hoppers.
(4) Prior to being placed into service, components (e.g., precipitators, fired reheaters) containing sources of ignition energy purged for either a period of not less than 5 minutes or five volume changes of that component, whichever is longer.
(5) Common component(s) between the furnace outlet and the stack shared with other operating boilers bypassed for unit purge.
(6) The first burner or group of burners lighted without any change in the airflow setting; burner air register position, except as permitted in 6.8.5.2.1.3(B)(6); or overfire air control damper position.

(C) Each boiler shall be tested during initial start-up to determine whether any modifications to the procedures specified in 6.8.5.1.5.7 are required to obtain desired ignition or to satisfy other design limitations during light-off and warm-up.

(D) For boilers that are purged with the registers in their normal operating position, it shall be allowed to momentarily close the registers of the burner being lighted if proven necessary to establish ignition.

(E) Modifications in the basic procedure shall be allowed only if they have been proven to be necessary to obtain light-off.

(F) However, 6.8.5.1.5.7(A)(1) shall always be followed, thereby satisfying the basic objectives in 6.8.5.1.5.7(B).

6.8.5.1.5.8 Modification to the mode of operation resulting from water, steam, and flue gas temperatures being outside the established limits in the economizers and superheaters shall be made only after it has been determined to be necessary by operating experience.

6.8.5.2 Functional Requirements.

6.8.5.2.1 Cold Start. This subsection shall cover the requirements for placing coal in service as the initial fuel being fired. The requirements for placing coal in service as a subsequent fuel shall be as detailed by 6.8.5.2.6.

6.8.5.2.1.1 Preparation for starting shall include a thorough inspection that shall verify the following:

(1) The furnace and flue gas passages are free of foreign material and not in need of repair.
(2) *The bottom of the furnace, including the ash hopper, is free of accumulations of solid or liquid fuel, fuel gases, or vapors prior to each start-up.
(3) All personnel are evacuated from the unit and associated equipment, and all access and inspection doors are closed.
(4) All airflow and flue gas flow control dampers have been operated through their full range to check the operating mechanism and then are set at a position that allows the fans to be started at a minimum airflow and without overpressuring any part of the unit.
(5) All individual burner dampers or registers that are subject to adjustment during operations have been operated through their full range to check the operating mechanism.
(6) The drum water level is established in drum-type boilers, circulating flow is established in forced circulation boilers, or minimum water flow is established in once-through boilers.
(7) The oxygen analyzer(s) and combustibles analyzer(s), if provided, are operating as designed, and a sample has been obtained. Combustibles indication is at zero, and oxygen indication is at maximum.
(8) The igniter safety shutoff valves are closed, and sparks are de-energized. Fuel gas ignition systems shall comply with the requirements of Section 6.6. Fuel oil ignition systems shall comply with the requirements of Section 6.7.
(9) The pulverizing equipment is isolated effectively to prevent inadvertent or uncontrolled leakage of coal into the furnace.
(10) The pulverizers, feeders, and associated equipment are operable, not in need of repair, and adjusted to the requirements of established operating procedures that ensure their standby start-up status. All pulverizer and feeder sensor lines are clean prior to starting.

Copyright 2014 National Fire Protection Association (NFPA). Licensed, by agreement, for individual use and download on October 4, 2014 to LEADER and READER for designated user PATTARAPORN SRITRAKOOL. No other reproduction or transmission in any form permitted without written permission of NFPA. For inquires or to report unauthorized use, contact licensing@nfpa.org.

(11) Energy is supplied to control system and to interlocks.
(12) A complete functional check of the interlocks has been made after an overhaul or modification of the interlock system.
(13)*An operational test of each igniter has been made. The test has been integrated into the starting sequence and has followed the unit purge and preceded the admission of any main fuel.
(14) Individual igniters or groups of igniters also have been permitted to be tested while the unit is in service. Such tests have been made with no main fuel present in the igniter's associated burner, and the burner air register has been in its start-up or light-off position as described in the established operating procedure.
(15)*Units with a history of igniter unreliability have gone through additional test routines to verify the continuing operating ability of igniters and ignition system components.

6.8.5.2.1.2 Where provided, regenerative air heaters and flue gas recirculation fans shall be operated during all operations of the unit in a manner recommended by the boiler manufacturer.

6.8.5.2.1.3 Starting Sequence.

(A) Operation of regenerative-type air heaters, precipitators, and flue gas recirculation fans shall be included in the start-up sequence in accordance with the manufacturer's recommendations.

(B) The starting sequence shall be performed in the following order:

(1) An open flow path from the inlets of the FD fans through the stack shall be verified.
(2) An ID fan, if provided, shall be started; an FD fan then shall be started. Additional ID fans or FD fans shall be started in accordance with Section 6.5, as necessary, to achieve purge flow rate.
(3) Dampers and burner registers shall be opened to purge position in accordance with the open-register purge method objectives outlined in 6.8.5.1.5.7.
(4) The airflow shall be adjusted to purge airflow rate, and a unit purge shall be performed. Special provisions shall be utilized as necessary to prevent the hazardous accumulation of volatile vapors that are heavier than air or to detect and purge accumulations in the furnace ash pit.
(5) For fuel gas– or fuel oil–fired igniters, the igniter safety shutoff valve(s) shall be opened, and it shall be confirmed that the igniter fuel control valve is holding the manufacturer's recommended fuel pressure necessary to allow the igniter to operate at design capacity. Fuel gas igniter headers shall be vented in order to be filled with fuel gas and to provide a flow (if necessary) so that the igniter fuel control valve can function to regulate and maintain the pressure within design limits specified by the manufacturer for lighting the igniters.
(6) The air register or damper on the burners selected for light-off shall be adjusted to the position recommended by the manufacturer or the established operating procedure, in accordance with 6.8.5.1.5.7(C) through 6.8.5.1.5.7(F).
(7) The spark or other source of ignition for the igniter(s) on the burner(s) to be lit shall be initiated, and the following procedures shall be performed:
   (a) The individual igniter safety shutoff valve(s) shall be opened.
   (b) If flame on the first igniter(s) is not established within 10 seconds, the individual igniter safety shutoff valve(s) shall be closed, and the cause of failure to ignite shall be determined and corrected.
   (c) With airflow maintained at purge rate, repurge shall not be required, but at least 1 minute shall elapse before a retrial of this or any other igniter is attempted.
   (d) Repeated retrials of igniters without investigating and correcting the cause of the malfunction shall be prohibited.
(8) With the coal feeder off, all gates between the coal bunker and the pulverizer feeder shall be opened, and it shall be confirmed that coal is available to the feeder.
(9) The igniters shall be checked to ensure they are established and are providing the required level of ignition energy for the main burners. The pulverizing equipment shall be started in accordance with the equipment manufacturer's instruction.
(10) The furnace airflow shall be readjusted after conditions stabilize, as necessary. Airflow shall not be reduced below the purge rate.
(11) The feeder shall be started at a predetermined setting with the feeder delivering coal to the pulverizer, and the following shall be performed:
   (a) Pulverized coal shall be delivered to the burners after the specific time delay necessary to build up storage in the pulverizer and transport the fuel to the burner.
   (b) This time delay, which shall be determined by test, shall be permitted to be as short as a few seconds with some types of equipment or as long as several minutes with others.
(12) Ignition of the main burner fuel admitted to the furnace shall be confirmed, and the following requirements shall be met:
   (a) Required ignition shall be obtained within 10 seconds following the specific time delay described in 6.8.5.2.1.3(B)(11).
   (b) The coal fuel trip shall be initiated on failure to ignite or loss of ignition on burners served by the first pulverizer placed in operation.
   (c) Except where associated Class 1 igniters are in service, a master fuel trip shall be initiated on failure to ignite or on loss of ignition on placing the first pulverizer into service.
   (d) Where the cause of failure to ignite or loss of ignition is known to be due to loss of coal in the pulverizer subsystem, initiation of the master fuel trip shall not be required, but all required conditions for light-off shall exist before coal feed is restored.
(13) For the following pulverizer and all subsequent pulverizers placed in operation, failure to ignite or loss of ignition for any reason on any burner shall cause the fuel flow to that burner to stop in accordance with the manufacturer's recommendations. All conditions required by established operating procedures for light-off shall exist before the burner is restarted.
(14) After stable flame is established, the air register(s) or damper(s) shall be adjusted slowly to its operating position, making certain that ignition is not lost in the process.
(15) The load for the operating pulverizer shall be at a level that prevents its load from being reduced below operating limits when an additional pulverizer is placed in operation.

Copyright 2014 National Fire Protection Association (NFPA). Licensed, by agreement, for individual use and download on October 4, 2014 to LEADER and READER for designated user PATTARAPORN SRITRAKOOL. No other reproduction or transmission in any form permitted without written permission of NFPA. For inquires or to report unauthorized use, contact licensing@nfpa.org.

(16) If a pulverizer has been operating but does not have all its burners in service, the idle burners shall be permitted to be restarted if the pulverizer-burner subsystem and its controls are designed specifically for such operations, and precautions are incorporated to prevent all the following conditions:
  (a) Accumulation of coal in idle burner lines
  (b) Hot burner nozzles and diffusers that have the potential to cause coking and fires when coal is introduced
  (c) Excessive disturbance of the air-fuel ratio of the operating burners

(17) If the precautions have not been taken, the idle burner(s) shall not be restarted. Instead, another pulverizer with all burners in service shall be started, and the pulverizer with idle burners shall be shut down and emptied.

(18) *The procedures of 6.8.5.2.1.3(B)(6) through 6.8.5.2.1.3(B)(16) shall be followed for placing an additional pulverizer into service. When fuel is being admitted to the furnace, igniters shall not be placed into service for any burner without proof that there is a stable fire in the furnace.

(19) *Igniters shall be permitted to be shut off after exceeding a predetermined minimum main fuel input that has been determined in accordance with 6.8.3.2.2. Verification shall be made that the stable flame continues on the main burners after the igniters are removed from service.

(20) The on-line metering combustion control (unless designed specifically for start-up procedures) shall not be placed into service until the following have occurred:
  (a) A predetermined minimum main fuel input has been attained.
  (b) All registers on nonoperating burners are closed, unless compensation is provided by the control system.
  (c) The burner fuel and airflow are adjusted as necessary.
  (d) Stable flame and specified furnace conditions have been established.

(21) Additional pulverizers shall be placed into service as needed by the boiler load in accordance with the procedures of 6.8.5.2.1.3(B)(6) through 6.8.5.2.1.3(B)(16).

(22) On units with an overfire air system, the overfire air control damper positions shall be permitted to be changed only when repositioning of all burner air registers or burner air dampers is permitted.

(23) On units with an overfire air system, the boiler shall be operating in a stable manner before the overfire air is introduced. The introduction of the overfire air shall not adversely affect boiler operation.

(24) On units with an overfire air system and a reburn system, the overfire air shall be placed in operation before the reburn fuel sequence is started.

(25) A reburn system shall be placed in service only after the boiler is operating at such a load as to ensure that the introduction of the reburn fuel will not adversely affect continued boiler operation. The required reburn zone temperatures shall be maintained in accordance with 6.8.3.5.2. The boiler shall be operating in a stable manner before the reburn start-up sequence is initiated.

6.8.5.2.2 Normal Operation.

6.8.5.2.2.1 Firing Rate.

(A) The firing rate shall be regulated by increasing or decreasing the fuel and air supply simultaneously to all operating burners, maintaining the air-fuel ratio within predetermined operating limits continuously at all firing rates.

(B) This procedure shall not eliminate requirements for air lead and lag during changes in the fuel firing rate.

6.8.5.2.2.2 The reburn injection rate shall be regulated within the design limits of the reburn equipment.

(A) Airflow lead and lag shall be used during changes in the reburn fuel injection rate.

(B) Reburn shutoff valves shall be fully open or completely closed.

(C) Intermediate settings shall not be used.

6.8.5.2.2.3 The firing rate shall not be regulated by varying the fuel to individual burners by means of the individual burner shutoff valve(s).

(A) Individual burner shutoff valve(s) shall be fully open or completely closed.

(B) Intermediate settings shall not be used.

6.8.5.2.2.4 Air registers shall be set at the firing positions as determined by tests except in systems provided with metering of air and fuel to each burner and designed specifically for individual burner modulating control.

6.8.5.2.2.5 The burner fuel and airflow shall be maintained within a range between the maximum and minimum limits as determined by trial or, if trial results do not exist, as specified by the combustion equipment manufacturer(s).

(A) These trials shall test for minimum and maximum limits and stable flame under the following conditions:

(1) With all coal burners in service and combustion control on automatic
(2) With different combinations of coal burners in service and combustion control on automatic
(3) With different combinations of fuel gas, fuel oil, and coal burners in service and combustion controls on automatic
(4) With minimum and maximum reburn flow rates
(5) With each reburn fuel injection pattern
(6) With overfire air operation at its minimum and maximum limits

(B) Where changes occur to any of the maximum and minimum limits because of equipment modifications, operating practices, or fuel conditions, retesting shall be required.

6.8.5.2.2.6 If lower minimum loads are required, the pulverizer(s) and associated burners shall be removed from service, and the remaining pulverizers shall be operated at a fuel rate above the minimum rate needed for stable operation of the connected burners.

(A) The minimum fuel rate shall be determined by tests with various combinations of burners in service and with various amounts of excess air and shall reflect the most restrictive condition.

(B) These tests also shall ensure that the transient stability factors described in 6.8.3.2.2 are taken into account.

Copyright 2014 National Fire Protection Association (NFPA). Licensed, by agreement, for individual use and download on October 4, 2014 to LEADER and READER for designated user PATTARAPORN SRITRAKOOL. No other reproduction or transmission in any form permitted without written permission of NFPA. For inquires or to report unauthorized use, contact licensing@nfpa.org.

6.8.5.2.2.7 The ignition system shall be tested for stable operation at the various conditions described in 6.8.5.2.2.5.

6.8.5.2.2.8 Loss of Individual Burner Flame.

(A) On loss of an individual burner flame, the flow of fuel to all burners of the pulverizer subsystem shall be stopped unless furnace configuration and tests have determined that one of the three automatic tripping philosophies described in 6.8.4.4 is applicable.

(B) Registers of shutdown burners shall be closed if interference with the air-fuel ratio at other burner flame envelopes occurs.

(C) Hazards in these types of situations shall be reduced by following the requirements in 6.8.5.2.10 and Chapter 9, which contain procedures for clearing pulverizers tripped while full of coal.

6.8.5.2.2.9 Total airflow shall not be reduced below the minimum purge rate established by the designer in accordance with 6.4.2.3.4.4.

6.8.5.2.3 Normal Shutdown. The requirements in 6.8.5.2.3 shall apply to the removal of coal from service as the only main burner fuel being fired, and the requirements in 6.8.5.2.7 shall apply to the removal of coal from service with other fuel remaining in service.

6.8.5.2.3.1 When the unit is taken out of service, the boiler load shall be reduced to that necessitating a purge rate airflow using the procedures outlined in 6.8.5.2.3.2 through 6.8.5.2.3.4 while maintaining operation within the tested limits determined in 6.8.5.2.2.5.

6.8.5.2.3.2 Prior to removing coal from service and prior to loss of reburn permissives, reburn fuel shall be shut down as defined in 6.6.5.2.9, 6.7.5.2.9, or 6.8.5.2.9.

6.8.5.2.3.3 A pulverized coal system shall be shut down in the following sequence:

(1) The fuel input, airflow, and register positions of the pulverizer shall be adjusted to values established for start-up.
(2) Igniters shall be placed into service at these burners, when required to maintain flame stability.
(3) The hot primary air shall be shut off and the cold primary air shall be opened to cool down the pulverizer in accordance with Chapter 9.
(4) The feeder shall be stopped in accordance with the manufacturer's recommendations. Operation of the pulverizer shall be continued with a predetermined airflow prescribed in an established operating procedure that has been proven to be sufficient to empty out the pulverizer and associated burner lines.
(5) The inerting medium shall be introduced into the pulverizer as dictated by the coal characteristics.
(6) The pulverizer subsystem shall be shut down when burner fires are out and the pulverizer is empty and cool.
(7) All individual burner line shutoff valves shall be closed unless otherwise directed by the manufacturer's instructions.
(8) Igniters shall be removed from service.

6.8.5.2.3.4 As the fuel is reduced, the following procedures shall be performed:

(1) The remaining pulverizers shall be shut down consecutively following the procedures of 6.8.5.2.3.3(1) through 6.8.5.2.3.3(8).
(2) In cases where the next pulverizer being removed has the potential to result in flame instability, igniters shall be placed into service on burners that are still being fired.

6.8.5.2.3.5 When all pulverizers, igniters, and the reburn system have been removed from service, the purge rate airflow shall be verified, and a unit purge shall be performed.

6.8.5.2.3.6 After completion of the unit purge, closing the burner air registers and shutting down the FD fans and ID fans shall be permitted to be optional; however, maintaining airflow through the unit to prevent accumulation of combustible gases is a prudent procedural step due to the potential of fuel leak-by.

6.8.5.2.3.7 Leakage of main or igniter fuels into the unit shall be prevented.

6.8.5.2.4 Normal Hot Restart.

6.8.5.2.4.1 When restarting a hot unit, the requirements of 6.8.5.2.1.1(6) through 6.8.5.2.1.1(11) for a cold start shall be met.

6.8.5.2.4.2 The starting sequence in 6.8.5.2.1.3(B)(1) through 6.8.5.2.1.3(B)(17) shall be followed.

6.8.5.2.5 Emergency Shutdown — Master Fuel Trip.

6.8.5.2.5.1 An emergency shutdown shall initiate a master fuel trip.

6.8.5.2.5.2 Mandatory Automatic Master Fuel Trips.

(A) Interlocks shall be installed in accordance with 6.4.2 and 6.5.4.

(B) A master fuel trip shall result from any of the following conditions:

(1) Total airflow decreases below the minimum purge rate airflow as required in 6.4.2.3.4.4(A) by 5 percent of design full load airflow
(2) Loss of either all FD fans or all ID fans
(3) Loss of all flame
(4) Partial loss of flame predetermined to be likely to introduce a hazardous accumulation of unburned fuel in accordance with Table 6.4.2.3.1(a), block 8
(5) Furnace pressure in excess of the prescribed operating pressure by a value recommended by the manufacturer
(6) All fuel inputs shut off in accordance with Table 6.4.2.3.1(a), block 9 *(See 6.4.2.3.9 for a list of the required interlocks and trips for individual pulverizer subsystems.)*

6.8.5.2.5.3 Mandatory Master Fuel Trips with Alarms — Not Necessarily Automatically Initiated. A master fuel trip shall result from any of the following conditions:

(1) Failure of the first pulverizer subsystem to operate successfully under the conditions specified in 6.8.5.2.1.3(B)(12) and Table 6.4.2.3.1(a), block 12d
(2) Loss of energy supply for combustion control, burner control, or interlock systems
(3) Furnace negative pressure in excess of the value specified by the manufacturer *(See 6.4.2.3.6.5.)*

6.8.5.2.5.4 A master fuel trip that results from any of the emergency conditions tabulated in 6.8.5.2.5.2 and 6.8.5.2.5.3 shall stop all coal flow to the furnace from all pulverizer subsystems by tripping the burner and reburn shutoff valves or other devices designed for emergency shutoff of all coal flow.

Copyright 2014 National Fire Protection Association (NFPA). Licensed, by agreement, for individual use and download on October 4, 2014 to LEADER and READER for designated user PATTARAPORN SRITRAKOOL. No other reproduction or transmission in any form permitted without written permission of NFPA. For inquires or to report unauthorized use, contact licensing@nfpa.org.

(A) Igniter sparks shall be de-energized, the igniter safety shutoff valve, individual igniter safety shutoff valves, primary air fans or exhausters, recirculating fans, coal feeders, and pulverizers shall be tripped, coal burner line shutoff valves shall be closed or equivalent functional action shall be taken to stop coal delivery to burners.

(B) The pulverizer motor shall be permitted to run prior to master fuel trip relay reset to clear residual coal from the pulverizer in accordance with 9.5.4.2.2.1(2).

(C) If a furnace inerting system is installed, the inerting system shall be operated simultaneously with the master fuel trip.

(D) Master fuel trips shall operate in a manner to stop all fuel flow into the furnace within a period that does not allow a dangerous accumulation of fuel in the furnace.

(E) A master fuel trip shall not initiate an FD or ID fan trip.

(F) Electrostatic precipitators, fired reheaters, or other ignition sources shall be tripped.

6.8.5.2.5.5 Following a master fuel trip, the unit shall be purged in accordance with 6.4.2.3.4.

6.8.5.2.5.6 If it is impossible to restart for an extended time, a flow of air through the unit shall be maintained to prevent accumulations of combustible gases.

6.8.5.2.6 Starting Sequence — Second Fuel.

6.8.5.2.6.1 When coal is started as a second fuel, the requirements of 6.8.5.2.1.1(8) through 6.8.5.2.1.1(11) shall be satisfied, and the total heat input shall be limited as described in 6.8.5.1.4.

6.8.5.2.6.2 The starting sequence of the first fuel (gas or oil) shall be complete.

6.8.5.2.6.3 The starting sequence of second fuel (coal) shall be performed in the starting sequence in 6.8.5.2.1.3(B)(5) through 6.8.5.2.1.3(B)(20).

Exception: For sequence 6.8.5.2.1.3(B)(12), where coal is the second fuel to be placed in service, a coal fuel trip shall be initiated on failure to ignite or loss of ignition on burners served by the first pulverizer placed in operation. A master fuel trip shall not be required.

6.8.5.2.7 Shutdown Sequence — Second Fuel.

6.8.5.2.7.1 The requirements in 6.8.5.2.7 shall apply to the removal of coal from service with other main burner fuel remaining in service, and the requirements in 6.8.5.2.3 shall apply to the removal of coal from service as the only main burner fuel being fired.

6.8.5.2.7.2 When shutting off coal with fuel gas or fuel oil remaining in service, a sequential shutdown of coal shall be accomplished in accordance with 6.8.5.2.3.2 through 6.8.5.2.3.4.

6.8.5.2.8 Reburn System Start.

6.8.5.2.8.1 The reburn system shall not be started until the requirements of 6.8.3.5.2 have been met and shall follow the prerequisites of 6.8.5.2.1.3(B)(23) and 6.8.5.2.1.3(B)(24).

6.8.5.2.8.2* The furnace temperature characteristics as a function of heat input, steam flow, or other reliable control signal shall be utilized as a permissive to initiate the reburn fuel injection.

6.8.5.2.8.3 The reburn fuel preparation and transport equipment shall be started in accordance with 9.5.2 for direct-fired systems or 9.5.3 for storage systems, and all system purging or warm-up shall be completed before any reburn fuel feeders are started.

6.8.5.2.8.4 If the reburn system admits reburn fuel through burners, then the starting sequence shall also follow that specified for burners in 6.8.5.2.1.3(B)(6) through 6.8.5.2.1.3(B)(14).

6.8.5.2.8.5 If the reburn system admits fuel by means other than through burners, then the starting sequence shall be as follows:

(1) Include all reburn operation permissives required by this chapter.
(2) Follow the procedure specified by the manufacturer of the reburn system.

6.8.5.2.9 Shutdown Sequence — Reburn Fuel.

6.8.5.2.9.1 If the reburn system admits reburn fuel through burners, the shutdown sequence shall follow that specified for burners in 6.8.5.2.3.

6.8.5.2.9.2 If the reburn system admits reburn fuel by means other than through burners, the shutdown sequence for dedicated and direct-fired pulverizers shall be as follows:

(1) Transfer combustion controls from automatic to manual control unless controls are designed and tuned to bring the system down to shutdown conditions.
(2) Reduce the reburn fuel flow to minimum.
(3) Shut down the reburn fuel supply system in accordance with Chapter 9.
(4) Close individual reburn shutoff valves.

6.8.5.2.10 Hazards of Residual Coal Charges in Pulverizers and Clearing After Shutdown.

6.8.5.2.10.1* The start-up procedure in Chapter 9 shall be followed unless it is positively known that the pulverizer is not charged with coal.

6.8.5.2.10.2 If the boiler is to be restarted and brought up to load without delay, the pulverizers with a charge and their feeders shall be started in sequence, as dictated by the load in accordance with the procedure described in Chapter 9.

6.8.5.2.10.3 If a delay in load demand is expected or undetermined but boiler conditions, including completion of purge, allow firing, the pulverizers shall be started and cleared in sequence in accordance with Chapter 9.

(A) If during this sequence it becomes possible to fire at a rate greater than the capacity of one pulverizer operating within its range of operation for stable flame, one of the pulverizers and its feeder shall be placed into service to help burn the coal being injected from the remaining pulverizers that are being cleared.

6.8.5.2.10.4 The inerting procedure shall be prescribed by the pulverizer equipment manufacturer in accordance with 9.5.4.2.1.

6.8.5.2.10.5 If firing is not to be initiated for an extended time, the pulverizer shall be cleaned manually or mechanically after having been cooled to ambient temperature and inerted before opening.

Copyright 2014 National Fire Protection Association (NFPA). Licensed, by agreement, for individual use and download on October 4, 2014 to LEADER and READER for designated user PATTARAPORN SRITRAKOOL. No other reproduction or transmission in any form permitted without written permission of NFPA. For inquires or to report unauthorized use, contact licensing@nfpa.org.

(A) To avoid the danger of an explosion when opening and cleaning any pulverizer, caution shall be used.

(B) The requirements in Chapter 9 shall be followed.

6.8.5.3 Emergency Conditions Not Requiring Shutdown or Trip.

6.8.5.3.1 In the event of a loss of a fan or fans for unit installations with multiple ID fans, FD fans, or both, the control system shall be capable of reducing the fuel flow to match the remaining airflow; otherwise, tripping of the unit shall be mandatory.

6.8.5.3.2* If an air deficiency develops while flame is maintained at the burners, the fuel shall be reduced until the air-fuel ratio has been restored within predetermined acceptable limits; if fuel flow cannot be reduced, the airflow shall be increased slowly until the air-fuel ratio has been restored to within those limits.

6.8.5.3.3* Where raw coal hangs up ahead of the feeder or where wet coal or changing coal quality is encountered, the igniters shall be placed into service on all operating burners.

6.8.5.3.3.1 If the malfunction is corrected or required ignition energy is resupplied before the burner flame is lost, the pulverizer subsystem shall be permitted to operate, provided there is a stable flame. *(See 6.8.4.4.1, which describes loss of flame trip requirements.)*

6.8.5.3.3.2 If the flame becomes unstable or is extinguished, the burner and subsystem shall be shut down.

6.8.5.3.3.3 Start-up conditions shall be established before coal feed is restored.

6.9* Selective Catalytic Reduction (SCR) Systems with Bypass Capability.

6.9.1 The SCR isolation and bypass dampers shall be included in the open flow path verification associated with the boiler draft system.

6.9.2* When an SCR with bypass is not required to be in service for environmental control purposes and is isolated from an operating boiler system, removable spool pieces or other approved isolation means shall be provided in the piping design and used to prevent ammonia or other combustible materials, including duct burner fuel supply, where used, from accumulating in the isolated SCR.

6.9.3* Means shall be provided to seal the isolated SCR enclosure from flue gas entry while the boiler is operating.

6.9.4* Operational tie-in of the SCR into the flue gas path while the boiler is being fired shall require the provisions in 6.9.4.1 through 6.9.4.4.

6.9.4.1 A postoperational purge of the SCR enclosure to remove any combustible materials shall have been performed after verification of the shutoff of the flow of ammonia and any other combustible materials into the SCR enclosure.

6.9.4.2 The postoperational purge of the SCR enclosure shall be for at least 5 minutes or five volume changes, whichever is greater, with a boiler airflow of at least 25 percent of the full load mass airflow or with an equivalent flue gas flow.

6.9.4.3 The shutoff of ammonia and any other combustible materials required in 6.9.4.1 shall have been continuously verified while the SCR system is isolated.

6.9.4.4 Sealing of the isolated SCR enclosure using the means required in 6.9.3 shall have been maintained while the boiler is operating with the SCR system isolated.

6.9.5 An SCR system not meeting all the requirements in 6.9.4 shall require the boiler to be shut down and a unit purge performed with the SCR system in the airflow path prior to restarting the boiler and putting the SCR system in operation.

Chapter 7 Atmospheric Fluidized Bed Boilers

7.1 Application.

7.1.1 This chapter shall be used in conjunction with Chapter 1 through Chapter 4 and requires the coordination of operation procedures, control systems, interlocks, and structural design. Where conflicts exist, the requirements of Chapter 7 shall apply.

7.1.2 Differences between fluidized bed combustion and other combustion technologies, covered elsewhere in this code, means that material contained in this chapter shall not be construed to apply to these other technologies. However, Chapter 1 through Chapter 4 of this code shall apply to atmospheric fluidized bed combustion.

7.2 Purpose. The purpose of this chapter is to establish minimum standards for the design, installation, operation, and maintenance of atmospheric fluidized bed boilers, associated fuel-burning systems, and related systems to contribute to safe operation and, in particular, to the prevention of furnace explosions and pressure excursions.

7.3 General.

7.3.1* Combustion Explosions. To prevent explosions in fluidized bed systems, the following conditions shall be avoided:

(1) An interruption of the fuel or air supply or ignition energy to warm-up burners, sufficient to result in causing momentary loss of flames, followed by restoration and delayed reignition of accumulated combustibles
(2) The accumulation of an explosive mixture of fuel and air as a result of the main fuel entering a bed whose temperature is below the ignition temperature for the main fuel and the ignition of the accumulation by a spark or other source of ignition
(3) Insufficient air to all or some bed compartments, causing incomplete combustion and accumulation of combustible material
(4) An accumulation of fuel in an idle fluidized bed that is still hot, leading to the distillation of combustible vapors followed by delayed ignition when the bed is fluidized as in a purge sequence

7.3.2* Furnace Implosions.

7.3.3 Fluidized Bed Combustion — Special Problems.

7.3.3.1 Heating the Bed.

7.3.3.1.1 The bed material shall be heated to a temperature above the autoignition temperature of the main fuel prior to the main fuel being admitted to the bed.

7.3.3.1.2 Warm-up burners shall be sized to permit warming the bed without the need to use fuel lances.

7.3.3.2* Char Carryover. Because char carryover is a characteristic of fluidized bed combustion, the system design shall in-

Copyright 2014 National Fire Protection Association (NFPA). Licensed, by agreement, for individual use and download on October 4, 2014 to LEADER and READER for designated user PATTARAPORN SRITRAKOOL. No other reproduction or transmission in any form permitted without written permission of NFPA. For inquires or to report unauthorized use, contact licensing@nfpa.org.

clude provisions to minimize char accumulations in the flue gas ductwork and dust collection equipment.

7.3.3.3 Coal Firing. In addition to the common hazards involved in the combustion of solid, liquid, and gaseous fuels, the following shall be considered in the design of coal-firing systems:

(1) Coal requires considerable processing in several independent subsystems operating in harmony. Failure to process the fuel properly in each subsystem increases the potential explosion hazard.
(2) Methane gas released from freshly crushed coal can accumulate in enclosed spaces.
(3) Raw coal can cause the following problems:
   (a) Raw coal delivered to the plant can contain foreign substances (e.g., scrap iron, wood shoring, rags, excelsior, rock) that can interrupt coal feed, damage or jam equipment, or become a source of ignition within the fuel-feeding equipment.
   (b) Wet coal can cause a coal hang-up in the raw coal supply system.
   (c) Wide variations in the size of raw coal can cause erratic or uncontrolled coal feeding or combustion.

7.3.3.4 Solid Fuels.

7.3.3.4.1 Explosions or fires can result from the backflow of hot flue gas or bed material into the fuel-feeding equipment; therefore, provisions shall be made in the design to prevent backflow of hot gases.

7.3.3.4.2 The following cautions shall be exercised in interpreting the meter indication for combustibles:

(1) Most meters and associated sampling systems measure only gaseous combustibles.
(2) The lack of a meter indication of combustibles shall not be proof that unburned coal particles or other combustibles are not present.

7.3.3.4.3 The following variations in the analysis and characteristics of solid fuels shall be considered in system design:

(1) Changes in the percentage of volatile matter and moisture affect the ignition characteristics of the fuel and will affect the minimum required bed temperature prior to admission of fuel into the bed.
(2) The amount of fines in the fuel also affects its ignition and burning characteristics.

7.3.3.5 Waste Fuel Firing. Common hazards involved in the combustion of waste fuels shall be recognized as follows:

(1) The considerations described in 7.3.3.3 also apply to waste fuels.
(2) Many waste fuels contain volatile solvents or liquids; therefore, precautions shall be taken in the design of the fuel-handling and storage system.
(3) Waste fuels are more variable in analysis and burning characteristics than conventional fuels; therefore, an evaluation of special fuel-handling and burning safeguards shall be carried out. Operators shall conduct tests when a new waste fuel is to be used. *(See Annex H.)*

7.3.3.6 Bed Ignition Temperature. The minimum bed temperature necessary to allow the admission of fuel into the bed shall be not less than that required for the highest ignition temperature for the range of fuels.

7.3.3.7 Hot Bed Material. Hot bed material removed from the fluidized bed combustion system shall be cooled prior to disposal.

7.3.3.8 Personnel Hazards. *(See also Annex L.)*

7.3.3.8.1 Safety precautions for dealing with personnel hazards associated with fluidized bed combustion shall be required for personnel safety. Hazards considered shall include, but not be limited to, the following:

(1) Hot solids
(2) Lime
(3) Hydrogen sulfide
(4) Calcium sulfide

7.3.3.8.2 Procedures shall be provided to ensure that, before personnel enter the furnace or connected space, hot solids are not present and that hot solids in a connected space cannot flow into the space to be occupied.

7.3.3.8.2.1 The procedure shall include inspections that start from the upper elevations of the hot cyclone(s) and other equipment and proceed to each space or chute below.

7.3.3.8.2.2* The absence of accumulated solids shall be confirmed.

7.3.3.9 Additional Special Problems in Fluidized-Bed Combustion Systems. The following additional problems shall be addressed by system designers and operators:

(1)*Thermal inertia of the bed, causing steam generation to continue after fuel trip
(2) Requirements for continuity of the feed water supply for extended periods following a fuel trip or the loss of all power supply to the plant
(3) Potential for unintended accumulations of unburned fuel in the bed
(4) Potential for generation of explosive gases if the air supply to a bed is terminated before the fuel in the bed is burned out
(5) Potential risk of explosion when the air supply is reestablished to a hot bed
(6) Bed solidification as a result of a tube leak or agglomeration
(7) Structural load requirements for abnormal accumulations of ash or bed material in the boiler furnace enclosure and the solids return path
(8)*Structural or fire hazards associated with backsifting of bed material

7.4 Equipment Requirements.

7.4.1 Structural Design.

7.4.1.1 Boiler Enclosure. See also Section 4.6.

7.4.1.1.1* The boiler enclosure shall be capable of withstanding a transient pressure without permanent deformation due to yield or buckling of any support member.

7.4.1.1.2 The minimum transient design pressure *(see 7.5.1)* shall meet both of the following:

(1) Whichever is greater, 1.67 times the predicted operating pressure of the component or +8.7 kPa (+35 in. w.g.), but not in excess of the maximum head capability of the air supply fan at ambient temperature
(2)*The maximum head capability of the ID fan at ambient temperature, but not more negative than –8.7 kPa (–35 in. w.g.)

Copyright 2014 National Fire Protection Association (NFPA). Licensed, by agreement, for individual use and download on October 4, 2014 to LEADER and READER for designated user PATTARAPORN SRITRAKOOL. No other reproduction or transmission in any form permitted without written permission of NFPA. For inquires or to report unauthorized use, contact licensing@nfpa.org.

7.4.1.2 Solid Material Feed Systems.

7.4.1.2.1 All components of the solid material feed system shall be designed to withstand, in addition to loads caused by the solid fuel, an internal gauge pressure without permanent deformation due to yield or buckling of any component.

7.4.1.2.1.1 The minimum internal gauge pressure shall be the greater of the following:

(1) 1.67 times the predicted operating pressure of the component
(2) +8.7 kPa (+35 in. w.g.)

7.4.1.2.1.2 The pressure defined in 7.4.1.2.1.1(1) shall not be required to be in excess of the maximum head capability of the pressure source under worst-case operating conditions.

7.4.1.2.2 Equipment design strength shall incorporate the combined stresses from mechanical loading, operationally induced loading, and internal design pressures plus an allowance for wear, which shall be determined by agreement between the manufacturer and the purchaser.

7.4.1.2.3 The components falling within the requirements of 7.4.1.2.1 shall begin at a point that is 0.61 m (2 ft) above the inlet of the solid material feeder.

7.4.1.2.3.1 The components shall end at the discharge of the solid material feed system; at the seal air connection, if provided; and at the connection of any other air or flue gas source.

7.4.1.2.3.2 These components shall include, but are not limited to, the following:

(1) Solid material feeding devices, discharge hoppers, and feed pipes to the feed system
(2) All parts of the solid material feed system that are required for containment of internal pressure
(3) Connecting piping from the feeder
(4) Foreign material–collecting hoppers that are connected to the feed system
(5) All valves in the fuel feed lines

7.4.1.2.3.3 The following components shall not be included in the requirements of 7.4.1.2.1:

(1) Raw fuel bunker
(2) Mechanical components, such as seals, gear, bearings, shafts, drives, and so forth

7.4.2 Fuel-Burning System.

7.4.2.1 System Requirements.

7.4.2.1.1 The fuel-burning system shall provide appropriate openings and configurations in the component assemblies to allow observation, measurement, and control of the combustion process for start-up, operation, and shutdown.

7.4.2.1.2 The fuel-burning system shall consist of the boiler enclosure and the following subsystems: air supply; coal, other solid fuel supply, or both; crushers (where utilized); bed feeds; liquid or gaseous fuel lances; burners; ash removal; ash re-injection; combustion products removal; and ignition subsystems.

7.4.2.1.3 Each subsystem shall be sized and interconnected to satisfy the requirements in 7.4.2.1.3.1 through 7.4.2.1.3.7.

7.4.2.1.3.1 Boiler Enclosure.

(A) The boiler enclosure shall be sized and arranged so that stable bed operations and stable combustion are maintained.

(B) Where prescribed purge procedures are followed, the boiler enclosure shall be free of dead pockets.

(C) Observation ports shall be provided to allow inspection of the duct and warm-up burners.

(D) Means shall be provided for monitoring of conditions at the bed and its ignition zone.

(E) Accessibility for maintenance shall be provided.

7.4.2.1.3.2 Air Supply Subsystem. *(See 4.7.5.)*

(A) The air supply equipment shall be sized and arranged to ensure a continuous airflow, sufficient for complete combustion of all fuel input, across all operating conditions of the unit.

(B) The arrangement of air inlets, ductwork, and air preheaters shall minimize contamination of the air supply by materials such as flue gas, water, fuel, and bed material. Appropriate drain and access openings shall be provided.

7.4.2.1.3.3* Solid Fuel Supply.

(A) The solid fuel supply subsystem shall be designed to ensure a steady fuel flow for all operating requirements of the unit.

(B) The solid fuel unloading, storage, transfer, and preparation facilities shall be designed and arranged to size the fuel, remove foreign material, and minimize interruption of the fuel supply to the feeders by the following means:

(1) The design shall include the installation of breakers, cleaning screens, and magnetic separators where necessary.
(2) Means for detection of flow interruption and correction shall be provided to ensure a steady flow to the boiler.

(C) Solid fuel feeders shall be designed with a capacity range to allow for variations in size, quality, and moisture content of the fuel, as specified by the purchaser, by the following means:

(1) Fuel piping to and from feeders shall be designed for free flow within the design range of solid fuel size, quality, and moisture content.
(2) Means shall be provided for proving solid fuel flow.
(3) Means shall be provided for clearing obstructions.

(D) A bed feed that operates at a lower pressure than the boiler enclosure to which it is connected shall have a lock hopper or other means to prevent backflow of combustion products.

(E) If transport air is required, means shall be provided to ensure a supply that continuously transports the required fuel input.

7.4.2.1.3.4 Crusher Subsystem (Where Utilized in the Fuel Feed System).

(A) Fuel-crushing equipment shall produce fuel sizing over a specified range of fuel analyses and characteristics by the following means:

(1) The crushing system shall be designed to minimize the possibility of fires starting in the system.
(2) Means shall be provided to extinguish fires. *(For further information, see Chapter 9.)*

(B) The transport system shall be sized and arranged to transport the material throughout the crusher's operating range.

Copyright 2014 National Fire Protection Association (NFPA). Licensed, by agreement, for individual use and download on October 4, 2014 to LEADER and READER for designated user PATTARAPORN SRITRAKOOL. No other reproduction or transmission in any form permitted without written permission of NFPA. For inquires or to report unauthorized use, contact licensing@nfpa.org.

7.4.2.1.3.5 Solids Removal Subsystems.

(A) The bed drain subsystem and flue gas–cleaning subsystem shall be sized and arranged to remove the bed material, fly ash, and spent sorbent at a rate that is at least equal to the rate at which they are generated by the fuel-burning process during unit operation.

(B) Convenient access and drain openings shall be provided.

(C) The removal equipment handling hot ash from the boiler shall be designed to provide material cooling when required before material is discharged into ash-handling and storage equipment. When cooling is required, safety interlocks equipped with a device to monitor cooling medium flow and material discharge temperature shall be provided to prevent fires or equipment damage.

7.4.2.1.3.6 Combustion products removal subsystem shall be in accordance with 4.7.8.

7.4.2.1.3.7 Ignition subsystem shall be in accordance with 4.7.7.

7.4.3 Warm-Up Burners and Lances.

7.4.3.1 Fuel Supply Subsystem — Gas.

7.4.3.1.1 Fuel Supply Equipment.

7.4.3.1.1.1 The fuel supply equipment shall be sized and arranged to ensure a continuous fuel flow for all operating requirements of the unit.

7.4.3.1.1.2 The operating requirements shall include coordination of the fuel control valve, burner safety shutoff valves, and associated piping volume to prevent fuel pressure transients that result in exceeding burner limits for stable flame caused by placing burners in service or taking them out of service.

7.4.3.1.2 Overpressure Protection.

7.4.3.1.2.1 The portion of the fuel supply system located outside the boiler room shall be arranged to prevent excessive fuel gas pressure in the fuel-burning system, even in the event of a failure of the gas supply constant fuel pressure regulator(s).

7.4.3.1.2.2 The design shall be accomplished by a full relieving capacity vent or a high gas supply pressure trip. *(See 7.7.5.3.)*

7.4.3.1.3 The fuel supply equipment shall be designed to inhibit contamination of the fuel.

7.4.3.1.3.1 Convenient access to important fuel system components shall be provided.

7.4.3.1.3.2 Drains shall be provided at low points in the piping.

7.4.3.1.4 The fuel supply equipment shall be capable of continuing fuel flow at the set point (demand) rate during anticipated furnace pressure pulsations.

7.4.3.1.5 External Hazards.

7.4.3.1.5.1 The fuel supply equipment shall be designed to minimize system exposure to severe external conditions such as fire, ash spills, or mechanical damage.

7.4.3.1.5.2 Piping routes and valve locations shall minimize exposure to explosion hazard or high temperature sources.

7.4.3.1.6 As much of the fuel subsystem as is practicable shall be located outside the boiler house.

7.4.3.1.7 A manual emergency shutoff valve that is accessible in the event of fire in the boiler area shall be provided.

7.4.3.1.8 Safety Shutoff Valve for Burner or Lance.

7.4.3.1.8.1 For each burner or lance, the minimum requirement shall be two safety shutoff valves with an intermediate vent valve (double block and vent) or equivalent valve arrangement.

7.4.3.1.8.2 For units with multiple burners or lances, a header safety shutoff valve and provisions to automatically vent the piping volume between the header safety shutoff valve and any individual burner or lance safety shutoff valves shall also be provided.

7.4.3.1.8.3 Multiple burners or lances supplied from a common set of safety shutoff valves shall be treated as a single (individual) burner or lance. *[See 7.4.3.7.2.2, 7.7.5.2.1.2(O), and 7.8.5.2.1.2(P).]*

7.4.3.1.9 Proof of closure shall be provided for all safety shutoff and supervisory shutoff valves and for all vent valves.

7.4.3.1.10 Safety Shutoff Valves for Igniters. For each igniter, the minimum requirement shall be two safety shutoff valves with an intermediate vent valve or equivalent valve arrangement.

7.4.3.1.10.1 For units with multiple burners, a common igniter fuel gas header safety shutoff valve and provisions to automatically vent the piping volume between the header safety shutoff valve and any igniter safety shutoff valves shall be provided.

7.4.3.1.10.2 The header safety shutoff valve and intermediate vent valve shall be dedicated to the igniter subsystem.

7.4.3.1.10.3 Proof of closure in accordance with 7.4.3.1.9 shall be provided for all individual igniter safety shutoff valves where individual igniter capacity exceeds 1.5 MW_t (5 million Btu/hr).

7.4.3.1.10.4 Multiple igniters supplied from a common set of safety shutoff valves shall be treated as a single (individual) igniter. *[See 7.7.5.2.1.2(N) and 7.8.5.2.1.2(O).]*

7.4.3.1.11 Leak Testing.

7.4.3.1.11.1 Provisions shall be made in the gas piping to allow testing for leakage and subsequent repair.

7.4.3.1.11.2 Provisions shall include a permanent means for making accurate tightness tests of the header safety shutoff valves and individual safety shutoff valves.

7.4.3.1.12 Shutoff valves shall be located as close as practicable to the igniters, burners, or lances to minimize the volume of fuel downstream of the valve.

7.4.3.1.13 Gas piping materials and system design shall be in accordance with ASME B31.1, *Power Piping*.

7.4.3.1.14 Before maintenance is performed on any gas piping, the piping shall be isolated and purged in accordance with the requirements of NFPA 54, *National Fuel Gas Code*.

7.4.3.2 Fuel Supply Subsystem — Fuel Oil.

7.4.3.2.1 Fuel Supply Equipment.

7.4.3.2.1.1 The fuel supply equipment shall be sized and arranged to ensure a continuous fuel flow for all operating requirements of the unit.

Copyright 2014 National Fire Protection Association (NFPA). Licensed, by agreement, for individual use and download on October 4, 2014 to LEADER and READER for designated user PATTARAPORN SRITRAKOOL. No other reproduction or transmission in any form permitted without written permission of NFPA. For inquires or to report unauthorized use, contact licensing@nfpa.org.

7.4.3.2.1.2 The design shall include coordination of the fuel control valve, burner safety shutoff valves, and associated piping volume to prevent fuel pressure transients that result in exceeding burner limits for stable flame caused by placing burners in service or taking them out of service.

7.4.3.2.2 Unloading, storage, pumping, heating, and piping facilities shall be designed and arranged to inhibit contamination of the fuel.

7.4.3.2.2.1 Where necessary, cleaning devices shall be provided to ensure clean fuel to valves and burners.

7.4.3.2.2.2 Convenient access to important fuel system components shall be provided.

7.4.3.2.2.3 Drains shall be provided.

7.4.3.2.3 Fill and recirculation lines to storage tanks shall discharge below the liquid level to prevent free fall.

7.4.3.2.4* Strainers, filters, traps, sumps, and similar components shall be provided to remove harmful contaminants where practicable; materials not removed shall be accommodated by special operating and maintenance procedures.

7.4.3.2.5 The fuel supply equipment shall be designed to minimize exposure to severe external conditions such as fire, ash spills, or mechanical damage.

7.4.3.2.6 Piping routes and valve locations shall minimize exposure to explosion hazards or to high temperature or low temperature sources.

7.4.3.2.6.1 Low temperatures that increase viscosity, inhibit flow, or precipitate waxy materials shall not be permitted.

7.4.3.2.6.2 High temperatures that cause carbonization or excessive pressures and leakage due to fluid expansion in "trapped" sections of the system shall not be permitted.

7.4.3.2.7 As much of the fuel supply subsystem as is practicable shall be located outside the boiler house.

7.4.3.2.8 A manual emergency shutoff valve shall be provided that is accessible in the event of fire in the boiler area.

7.4.3.2.9 Means shall be provided to prevent or relieve excess pressure from expansion of entrapped oil in the fuel system.

7.4.3.2.10 Discharge Means.

7.4.3.2.10.1 Relief valve discharge passages, vents, and telltales shall be provided with piping sized to allow the discharge of oil or vapors to prevent excessive pressure in the system.

7.4.3.2.10.2 This piping shall be heat traced as required to achieve the free flow of relieved fluid.

7.4.3.2.11 Safety Shutoff Valves for Burner or Lance.

7.4.3.2.11.1 A header safety shutoff valve and individual burner safety shutoff valves shall be provided.

7.4.3.2.11.2 Proof of closure shall be provided for all safety shutoff and supervisory shutoff valves. Proof of closure shall be provided for all burner safety shutoff valves.

7.4.3.2.11.3 Multiple burners supplied from a common set of safety shutoff valves shall be treated as a single (individual) burner.

7.4.3.2.11.4 Where oil igniters are provided, a common igniter fuel oil header safety shutoff valve and individual igniter safety shutoff valves shall also be provided. The igniter header safety shutoff valve shall be dedicated to the igniter subsystem.

7.4.3.2.11.5 Multiple igniters supplied from a common set of safety shutoff valves shall be treated as a single (individual) igniter.

7.4.3.2.11.6 Proof of closure in accordance with 6.4.2.3.4(c) shall be provided for all individual igniter safety shutoff valves where individual igniter capacity exceeds 1.465 MW_t (5.0 MBtu/hr).

7.4.3.2.11.7 For fuel oil applications, valve leakage shall be Class IV as defined by ANSI/FCI 70-2, *Control Valve Seat Leakage*.

7.4.3.2.11.8 Burner, lance, and igniter shutoff valves shall be located as close as practicable to the igniters or burners to minimize the volume of fuel downstream of the valve.

7.4.3.2.12 Oil piping materials and system design shall be in accordance with NFPA 31, *Standard for the Installation of Oil-Burning Equipment*, and ASME B31.1, *Power Piping*.

7.4.3.2.13 All instruments and control piping and other small lines containing oil shall be rugged, capable of withstanding the expected range of external temperatures, protected against damage, and maintained at the fluid temperature range of the specified fuel oil.

7.4.3.2.14 Positive means to prevent leakage of oil into a furnace or duct shall be provided.

7.4.3.2.15 Leak Testing.

7.4.3.2.15.1 Provisions shall be made in the oil supply system to allow testing for leakage and subsequent repair.

7.4.3.2.15.2 Provisions shall include permanent means for making accurate tightness tests of all safety shutoff valves.

7.4.3.2.16 Fuel oil shall be delivered to the burners at the temperature and pressure recommended by the burner manufacturer to ensure complete atomization.

7.4.3.2.17 Heating of oil, if necessary, shall be accomplished without contamination or coking.

7.4.3.2.18 Recirculation.

7.4.3.2.18.1 Recirculation provisions shall be incorporated for controlling the viscosity of the oil to the burners for initial light-off and for subsequent operation.

7.4.3.2.18.2 Recirculation systems shall be designed and operated to prevent excessively hot oil from entering fuel oil pumps, which causes them to vapor bind and subsequently interrupts the fuel oil supply.

7.4.3.2.18.3 Positive means shall be provided to prevent fuel oil from entering the burner header system through recirculating valves, particularly from the fuel supply system of another boiler.

7.4.3.2.18.4 The positive means required by 7.4.3.2.18.3 shall not rely on check valves because they have not proven dependable in heavy oil service.

7.4.3.2.19 Provisions, including an ignition source, shall be provided for clearing (scavenging) the passages of an atomizer that lead into the furnace or duct.

Copyright 2014 National Fire Protection Association (NFPA). Licensed, by agreement, for individual use and download on October 4, 2014 to LEADER and READER for designated user PATTARAPORN SRITRAKOOL. No other reproduction or transmission in any form permitted without written permission of NFPA. For inquires or to report unauthorized use, contact licensing@nfpa.org.

7.4.3.3 Warm-Up Burner Subsystem.

7.4.3.3.1 General.

7.4.3.3.1.1 The warm-up burner subsystem shall function to supply the heat energy required to bring the bed to the main fuel ignition temperature.

7.4.3.3.1.2 The warm-up burner shall meet the requirements of Section 4.7.

7.4.3.3.1.3 Provision shall be made for visual observation of conditions at the burner ignition zone.

(A) Additional provisions shall be made for flame detection equipment.

(B) The burner equipment shall be located in an appropriate environment with convenient access for maintenance.

(C) Special attention shall be given to fire hazards imposed by leakage or rupture of piping near the burner.

(D) The requirements of good housekeeping shall be practiced.

7.4.3.3.1.4 Flue Gas Recirculation to Burners. When flue gas or other inert gases are introduced to the secondary air or combustion air being supplied to burners, testing shall be used to demonstrate that the methods and devices used provide uniform distribution and mixing.

(A) The oxygen content of the mixture being supplied to the burners shall not be permitted to go below the limit specified by the burner manufacturer or as proven by tests to provide stable combustion.

(B) Means shall be provided to monitor either the ratio of flue gas to air or the oxygen content of the mixture.

7.4.3.3.2 Subsystem Requirements.

7.4.3.3.2.1 Air Supply. A portion of the total air supply necessary for light-off and flame stabilization shall be supplied to the warm-up burner(s).

7.4.3.3.2.2 Ignition. The ignition subsystem shall be designed in accordance with 4.7.7.

7.4.3.4 Flame Monitoring and Tripping.

7.4.3.4.1 Functional Requirements. The basic requirements of any flame monitoring and tripping system shall be as stated in 7.4.3.4.1.1 through 7.4.3.4.1.6.

7.4.3.4.1.1 The warm-up burners shall meet the requirements of 7.4.4.2.

7.4.3.4.1.2 Each burner shall provide enough system resistance or dampening to the fuel and airflow to override anticipated furnace pulsations and maintain stable combustion.

7.4.3.4.1.3 Each burner shall be individually supervised, and, on detection of loss of burner flame, the safety shutoff valve for the burner experiencing the loss shall automatically close.

7.4.3.4.1.4* Regardless of the number or pattern of flame loss indications used for tripping, loss of flame indication on an operating burner or flame envelope shall initiate an alarm to warn the operator of potential hazard.

7.4.3.4.1.5 Field testing shall be required to validate basic flame tripping concepts.

(A) These tests shall be performed on representative units.

(B) The results of these tests shall be permitted to be applied to other units of the same size and arrangement, including burners and nozzles that are of the same capacity and use the same fuels.

(C) These tests shall not replace acceptance tests relating to proof of design, function, and components.

7.4.3.4.1.6 Oil-fired warm-up burners, firing into the bed, shall be permitted to be scavenged immediately after shutdown or trip if the bed is fluidized and the bed temperature is greater than 760°C (1400°F) or if associated igniters are in service.

7.4.3.4.2 Flame Detection.

7.4.3.4.2.1 Class 1 Igniter.

(A) Where Class 1 igniters are provided, the main burner flame shall be proven either by the flame scanner or by the igniter being proven.

(B) At least one flame detector shall be provided for each burner to detect the burner flame or igniter flame where a Class 1 igniter is provided.

7.4.3.4.2.2 Class 2 Igniter. Burners with Class 2 igniters shall have at least two flame detectors.

(A) One detector shall be positioned to detect the main burner flame and shall not detect the igniter flame.

(B) The second detector shall be positioned to detect the igniter flame during prescribed light-off conditions.

7.4.3.4.2.3 Class 3 Igniter. Burners with Class 3 igniters shall have at least one flame detector.

(A) The detector shall be positioned to detect the igniter flame.

(B) It also shall detect the main burner flame after the igniter is removed from service at the completion of the main burner trial for ignition.

7.4.3.4.2.4 On detection of loss of all flame in the furnace or partial loss of flame to the extent that hazardous conditions develop, a master fuel trip shall be automatically initiated.

7.4.3.4.2.5 Nonigniting Fuel.

(A) Any fuel input that does not ignite and burn on a continuous basis shall be classified as a hazard.

(B) Regardless of the number or pattern of flame loss indications used for tripping, loss of flame indication on an operating burner or flame envelope shall initiate an alarm that warns the operator of a potential hazard.

7.4.3.4.2.6 Flame Tripping Validation.

(A) The flame tripping concept used on the unit shall have been validated by the boiler manufacturer for the specific furnace configuration being used.

(B) This validation shall not be used to replace unit acceptance tests relating to proof of design, function, and components.

7.4.3.5 Flame Detection. Flame detection shall be in accordance with 4.12.3.

7.4.3.6 Combustion Control System. *(See also Section 4.13.)*

7.4.3.6.1 The combustion control system shall be in accordance with 7.4.4.4.

Copyright 2014 National Fire Protection Association (NFPA). Licensed, by agreement, for individual use and download on October 4, 2014 to LEADER and READER for designated user PATTARAPORN SRITRAKOOL. No other reproduction or transmission in any form permitted without written permission of NFPA. For inquires or to report unauthorized use, contact licensing@nfpa.org.

7.4.3.6.2 Equipment shall be provided and operating procedures established to ensure a stable flame condition at each burner and to preclude the possibility of an air-fuel ratio condition that results in a fuel-rich condition within the furnace.

7.4.3.6.3 Provision shall be made for setting minimum and maximum limits on the warm-up burner fuel and air control subsystems to prevent fuel flow and airflow beyond the stable flame limits of the burner(s). These minimum and maximum limits shall be specified by the burner manufacturer and verified by operating tests in accordance with 7.4.3.8 and 7.7.3.2.

7.4.3.6.4 While in the automatic control mode, the control system shall prevent the demand for a fuel-rich mixture.

7.4.3.7 Lance Subsystem.

7.4.3.7.1 Functional Requirements.

7.4.3.7.1.1 The lance subsystem shall function to provide alternative or supplemental fuel input to the bed.

7.4.3.7.1.2 The lances shall meet the requirements of Section 4.7.

7.4.3.7.2 Subsystem Requirements.

7.4.3.7.2.1 Fuel Supply System.

(A) The liquid or gaseous fuel lance subsystem shall be designed so that the fuel is supplied in a continuous manner and within the confines of stable combustion limits.

(B) Minimum bed temperature interlocks shall be furnished to ensure the combustion of fuel in the bed at all times.

(C) Provision shall be made for protecting the lance nozzles and tips.

(D)* The lance equipment shall be located in an appropriate environment with access for maintenance.

7.4.3.7.2.2 Multiple Lances Under Common Control.

(A) A group of lances shall be permitted to be supplied from a common header whose input is controlled by a single set of fuel safety shutoff and control valves.

(B) Flow to a group of lances that is controlled from a common source shall be treated as an individual lance.

7.4.3.8* Burner Testing. The turndown limits of stable flame for each burner subsystem producing a separate flame envelope shall be determined by tests without the ignition system in service.

7.4.3.8.1 These tests shall verify that transients generated in the fuel and air subsystems do not adversely affect the burners in operation.

7.4.3.8.2 These tests shall include the use of those fuels expected to be used.

7.4.4 Burner Management, Combustion Monitoring and Tripping, and Bed Temperature Monitoring.

7.4.4.1 Burner Management System. The burner management system shall be in accordance with Section 4.11.

7.4.4.2 Combustion Monitoring and Tripping Systems — Functional Requirements. The basic requirements of the combustion monitoring and tripping system shall be as follows:

(1) Combustion instability situations shall be brought to the attention of the operator for remedial action.

(2) An emergency shutdown of the involved equipment shall be automatically initiated on detection of serious combustion problems that would lead to the accumulation of unburned fuel or to other hazardous situations.

7.4.4.3* Bed Temperature Monitoring.

7.4.4.3.1 The bed temperature, monitored by taking a number of measurements physically located in the bed, shall provide a representative bed temperature profile under all operating conditions.

7.4.4.3.1.1 If the bed is compartmented, the bed temperature of each individual compartment shall be monitored.

7.4.4.3.1.2 The bed temperature(s) shall be available to the operator.

7.4.4.3.1.3* The bed temperature measurements shall be valid only when the bed is fluidized.

7.4.4.3.2 An indication of bed temperature outside the normal operating range shall be brought to the attention of the operator in order to permit remedial action.

7.4.4.3.3 On detection of a bed temperature that falls below the minimum value established for self-sustaining combustion of the fuel(s) being fired in the bed, that fuel supply shall be automatically shut down.

7.4.4.4 Combustion Control System.

7.4.4.4.1 Functional Requirements.

7.4.4.4.1.1 The combustion control system shall maintain furnace fuel and air input in accordance with demand.

7.4.4.4.1.2 The combustion control system shall maintain the bed temperature within the limits required for continuous stable combustion for the full operating range of the boiler.

7.4.4.4.1.3* Furnace inputs and their relative rates of change shall be controlled to maintain the air-fuel ratio within the limits required for continuous combustion and stable bed conditions for the full operating range of the boiler.

7.4.4.4.2 System Requirements.

7.4.4.4.2.1 Equipment shall be provided and operating procedures established to heat the bed material prior to admitting fuel to the bed.

(A) For bed start-up, the temperature of the bed material shall be raised to the minimum value established for self-sustaining combustion of the fuel. *(See Annex H.)*

(B) For bed start-up, the bed shall be fluidized before fuel is admitted.

7.4.4.4.2.2 Minimum and Maximum Limits.

(A) Provisions shall be made for setting minimum and maximum limits on the fuel and air control subsystems to ensure stable bed operation and to prevent fuel and airflows beyond the capacity of the furnace.

(B) These minimum and maximum limits shall be defined by the boiler manufacturer and verified by operating tests.

7.4.4.4.2.3 When changing furnace heat input, the airflow and fuel flow shall be changed simultaneously to maintain an air-rich air-fuel ratio during and after the changes.

(A) This requirement shall not eliminate the requirements for air lead and lag during changes in the fuel-firing rate.

Copyright 2014 National Fire Protection Association (NFPA). Licensed, by agreement, for individual use and download on October 4, 2014 to LEADER and READER for designated user PATTARAPORN SRITRAKOOL. No other reproduction or transmission in any form permitted without written permission of NFPA. For inquires or to report unauthorized use, contact licensing@nfpa.org.

(B) Setting the fuel flow control on automatic without setting the airflow control on automatic shall be prohibited, and this function shall be interlocked.

(C) Where fluidized bed combustion (FBC) boilers burn fuels of widely varying heat value and air demand per unit of fuel, the required air-fuel ratio limits shall include provision for the calibration of the air-fuel ratio.

7.4.4.4.2.4 The control system shall prevent the demand for a fuel-rich mixture while in the automatic control mode.

7.4.4.4.2.5 Means shall be provided to limit fuel input to the air input while in the automatic control mode.

7.4.4.4.2.6 On balanced draft furnaces, furnace draft shall be maintained at the set point.

7.4.4.4.2.7 Equipment shall be designed and procedures established to allow on-line maintenance of combustion control equipment.

7.4.4.4.2.8 Provisions for calibration and testing of combustion control and associated interlock equipment shall be furnished.

7.4.4.4.2.9* Flue gas oxygen analyzers shall be provided for use as an operating guide.

7.4.4.4.2.10 Fuel gas flowmeters shall be operated at constant pressure conditions or shall be pressure compensated where pressure variations introduce a significant error.

7.4.4.4.2.11 Fuel oil flowmeters shall be compensated where variations in temperature or viscosity introduce a significant error.

7.4.4.4.2.12 Means of providing a calibrated solid fuel flow signal for each feeder shall be part of the combustion control and solid fuel feed control systems to provide indexes of total fuel versus total airflow for use as an operating guide.

7.4.4.4.2.13 Means shall be provided to maintain the transport/fluidizing air necessary for transporting the required fuel, sorbent, and recycled ash material, as applicable.

7.4.4.5 Operating Information. In addition to the requirements of Section 4.15, a continuous trend display of bed temperature shall be provided.

7.5* Furnace Pressure Excursion Prevention.

7.5.1* General. The methods for minimizing the risks of furnace pressure excursions in excess of furnace structural capability shall be accomplished by the requirement in 7.5.1.1 or the requirement in 7.5.1.2.

7.5.1.1 The boiler enclosure, the air supply system, and the flue gas removal system shall be designed so that the maximum head capability of the FD fans and ID fans within these systems, with ambient air, does not exceed the design pressure of these systems.

7.5.1.2 A furnace pressure control system shall be provided in accordance with 7.5.2 and a furnace design as specified in 7.4.1.1.

7.5.2 Furnace Pressure Control Systems.

7.5.2.1 Functional Requirements. The furnace pressure control system shall control the furnace pressure at the desired set point in the combustion chamber.

7.5.2.2 System Requirements. The technical requirements of this section shall be in accordance with the flow chart shown in Figure 7.5.2.2.

7.5.2.2.1 The furnace pressure control subsystem, block (A), in Figure 7.5.2.2, shall position the draft-regulating equipment to maintain furnace pressure at the desired set point.

7.5.2.2.2 The control system, as shown in Figure 7.5.2.2, shall include the following:

(1) Three furnace pressure transmitters (B), each on a separate pressure-sensing tap and monitored (C) to minimize the possibility of operating with a faulty furnace pressure measurement
(2) A feed-forward signal (D) to indicate boiler airflow demand. This signal shall be permitted to be a fuel flow signal, a boiler master signal, or other index of demand but shall not be a measured airflow signal
(3) Override action or directional blocking (E) for large furnace draft errors introduced after the auto/manual transfer station (F)
(4) The prevention of uncontrolled changes in air or flue gas flow caused by axial fans, where used, achieved by operating the fans in such a manner as to avoid a stall condition
(5) Purge air as required to keep the sensing lines open

7.5.2.3 Furnace Pressure Control Final Control Elements. The furnace pressure control element(s), that is, the draft fan inlet damper, drive blade pitch control, and speed control *[see (G) in Figure 7.5.2.2)*], shall meet the following criteria:

(1)*The operating speed shall not exceed the control system's sensing and positioning capabilities.
(2) The operating speed of the draft control equipment shall not be less than that of the airflow control equipment.

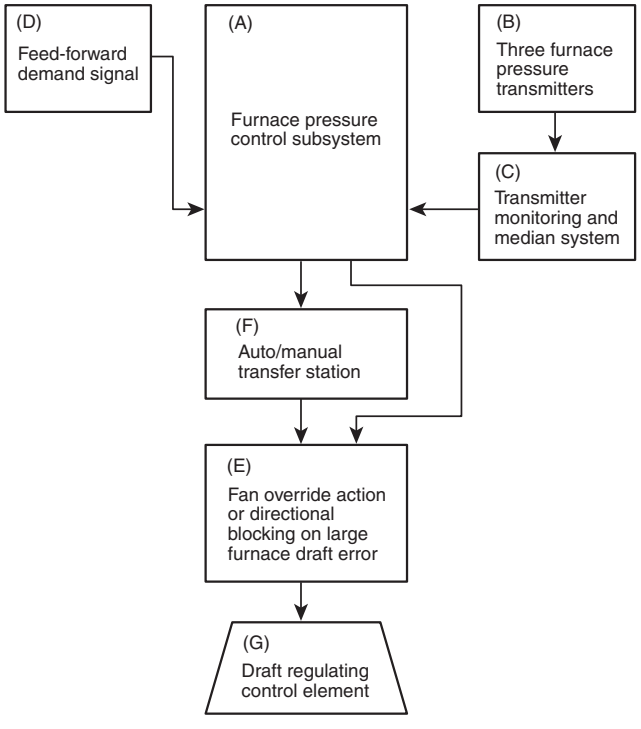

FIGURE 7.5.2.2 System Requirements.

Copyright 2014 National Fire Protection Association (NFPA). Licensed, by agreement, for individual use and download on October 4, 2014 to LEADER and READER for designated user PATTARAPORN SRITRAKOOL. No other reproduction or transmission in any form permitted without written permission of NFPA. For inquires or to report unauthorized use, contact licensing@nfpa.org.

7.5.3 Sequence of Operations.

7.5.3.1 Functional Requirements.

7.5.3.1.1 General.

7.5.3.1.1.1 The sequence for starting and stopping fans shall be in accordance with written operating procedures provided by manufacturers, engineering consultants, and operating companies.

7.5.3.1.1.2 These procedures shall be integrated with the operating procedures specified in 7.5.3 and Section 7.6.

7.5.3.1.2 Open Flow Path.

7.5.3.1.2.1 An open flow path from the inlet of the forced draft fans through the stack shall be ensured under all operating conditions.

7.5.3.1.2.2 Where the system design does not allow the use of fully open air paths, the minimum width of open area air paths shall not be less than that required for purge airflow with fans in operation.

7.5.3.1.2.3 On installations with multiple ID or FD fans, all fan flow control devices and shutoff dampers shall be opened in preparation for starting the first induced draft fan.

(A) Isolating dampers, windbox dampers, air registers, and other control dampers shall be opened as required to ensure an open flow path from the FD fan inlet through the furnace, the ID fans, and the stack.

(B) Unless an open flow path is provided by other means, the open path shall be ensured during starting of the first ID and FD fans.

(C) During any individual fan-starting sequence, the associated flow control devices and shutoff dampers shall be permitted to be closed.

7.5.3.1.2.4 On installations with a single ID or FD fan, the ID fan control devices and shutoff dampers shall be permitted to be closed as required during fan start-up.

(A) Once the ID fan is operating and has stabilized, the FD fan flow control devices and shutoff dampers shall be brought to the position that limits starting current during the fan's start-up.

(B) The FD fan flow control devices and shutoff dampers shall then be brought to the position for purge airflow during fan operation.

7.5.3.1.2.5 Within the limitations of the fan manufacturer's recommendations, all flow control devices and shutoff dampers on idle fans shall remain open until the first ID and first FD fans are in operation while maintaining furnace pressure conditions and indication of an open flow path.

7.5.3.1.2.6 After the first ID and FD fans are started and are delivering air through the furnace, the shutoff damper(s) of the remaining idle fan(s) shall be permitted to be closed.

7.5.3.1.2.7 The practice of operating with excess ID fan capability in relation to either FD fan capability or boiler load shall be discouraged.

7.5.3.1.3 The sequence for starting and stopping fans under all conditions shall be as follows:

(1) An ID fan is started, and then an FD fan is started. Subsequent ID and FD fans shall be started in accordance with 7.5.3.1.4.
(2) Shutdown procedures shall be the reverse of those required in 7.5.3.1.3(1).

7.5.3.1.4 Where starting and stopping fans, the method employed and the manipulation of the associated control elements shall minimize furnace pressure excursions.

7.5.3.1.4.1 The furnace pressure control subsystem shall be placed on and maintained on automatic controls as soon as possible.

7.5.3.1.5 Following shutdown of the last fan due to any cause, the opening of fan dampers shall be delayed or controlled to prevent positive or negative furnace pressure transients in excess of design limits during fan coastdown.

7.5.4 Interlock System.

7.5.4.1 Functional Requirements. The functional requirements for interlock systems specified in Section 7.9 shall be followed.

7.5.4.2 System Requirements.

7.5.4.2.1 Operating personnel shall be made aware of the limitations of the automatic protection system.

7.5.4.2.2 The interlocks in 7.5.4.2.2.1 through 7.5.4.2.2.5 shall be provided, and a short time delay shall be permitted to allow for rapid transients that do not present a hazard.

7.5.4.2.2.1 High Furnace Pressure.

(A) A master fuel trip shall be initiated when the furnace pressure exceeds a value specified by the manufacturer.

(B) If fans are operating after the trip, they shall be continued in service.

(C) The airflow shall not be increased by deliberate manual or automatic control action.

(D) Before the main fuel firing and following a master fuel trip, FD fans shall be tripped if the furnace positive pressure exceeds a value specified by the manufacturer.

(E) The value of the positive pressure at which the FD fan trip is activated shall be greater than that specified in 7.5.4.2.2.1(A).

7.5.4.2.2.2 High Furnace Draft (Balanced-Draft Units).

(A) A master fuel trip (not necessarily automatic) shall be initiated when the furnace negative pressure exceeds a value specified by the manufacturer.

(B) If fans are operating after the trip, they shall be continued in service.

(C) The airflow shall not be increased by deliberate manual or automatic control action.

(D) Before the main fuel firing and following a master fuel trip, all ID fans shall be tripped if furnace negative pressure exceeds a value specified by the manufacturer.

(E) The value of the negative pressure at which the ID fan trip is activated shall be greater than that specified in 7.5.4.2.2.2(A).

7.5.4.2.2.3 Loss of FD Fans.

(A) An interlock to prove that each FD fan is running and capable of providing the required flow shall be provided.

Copyright 2014 National Fire Protection Association (NFPA). Licensed, by agreement, for individual use and download on October 4, 2014 to LEADER and READER for designated user PATTARAPORN SRITRAKOOL. No other reproduction or transmission in any form permitted without written permission of NFPA. For inquires or to report unauthorized use, contact licensing@nfpa.org.

(B) Loss of such proofs shall initiate "loss of FD fan(s)" interlocks in accordance with the manufacturer's requirements and the requirements of this code.

(C) Damper(s) shall be closed on loss of an individual FD fan, unless it is the last FD fan in service.

(D) Where an interlock system is provided to start, stop, and trip ID fans and FD fans in pairs, the associated ID fan shall be tripped on loss of an individual FD fan, and the dampers associated with both fans shall be closed, provided they are not the last fans in service.

(E) If they are the last fans in service, the FD fan dampers shall remain open, and the ID fan shall remain in controlled operation.

(F) A master fuel trip shall be initiated on loss of all FD fans.

(G) All FD fan dampers shall be opened after a time delay to prevent high duct pressure during fan coastdown.

(H) Dampers shall remain open.

(I) Gas recirculation fan system dampers shall be closed.

7.5.4.2.2.4 Loss of ID Fans.

(A) An interlock to prove that each ID fan is running and capable of providing the required flow shall be provided.

(B) Loss of such proofs shall initiate "loss of ID fan(s)" interlocks in accordance with the manufacturer's requirements and the requirements of this code.

(C) Damper(s) shall be closed on loss of an individual ID fan, provided it is not the last ID fan in service.

(D) Where an interlock system is provided to start, stop, and trip ID fans and FD fans in pairs, the associated FD fan shall be tripped on loss of an individual ID fan.

(E) The dampers associated with both fans shall be closed, provided they are not the last fans in service.

(F) A master fuel trip shall be initiated on loss of all ID fans.

(G) All FD fans shall be tripped.

(H) All ID fan dampers shall be opened after a time delay to prevent high draft during fan coastdown.

(I) Dampers shall remain open, and fans shall be started in accordance with 7.5.3.1.2 through 7.5.3.1.4.

(J) Gas recirculation fan system dampers shall be closed.

7.5.4.2.2.5 Multiple and Variable Speed Fans. After the start of the first ID and FD fans, any subsequent fan(s), whether of the FD or ID type, shall be capable of delivering airflow before its damper(s) is opened.

7.6 Sequence of Operations.

7.6.1 General.

7.6.1.1 Sequencing shall follow procedures that allow prepared fuel to be admitted to the fluidized bed combustion zone only when hot fluidized bed mass and required combustion airflow exist to ignite the fuel as it enters the furnace and to burn it continuously and as completely as possible within the confines of the combustion area.

7.6.1.2 The sequence of operations shall be based on the safety interlock system shown in Figure 7.9.3.1.1(b).

7.6.1.2.1 These sequences shall be followed where the unit is operated manually or where certain functions are accomplished by interlocks or automatic controls.

7.6.1.2.2 Different arrangements shall be permitted where equivalent protection is provided and the intent of the operating sequences specified in this section is met.

7.6.1.3* The starting and shutdown operating sequences for fluidized bed boilers shall be permitted to be designed to preserve the temperature of the bed material and refractory.

7.6.1.3.1 As a result, the warm-up cycle for cold start-up and hot restart, as well as the shutdown sequence, shall be permitted to be different from other coal-, oil-, or gas-fired boilers.

7.6.1.3.2 Differences shall be permitted in, but not limited to, the following operating sequences:

(1) On a cold start-up, after the purge period, airflow through the bed (depending on the process design) shall be permitted to be reduced below the purge value to provide for the warm-up rate specified by the manufacturer. However, under no circumstances shall the total airflow through the unit be less than the unit purge rate.
(2) During a hot restart, if the bed material is above a predetermined minimum ignition temperature, fuel shall be permitted to be admitted to the boiler, or warm-up burners shall be permitted to be started to preserve bed temperature without a purge.
(3) Tripping the fans or diverting airflow from previously active bed sections shall be permitted after a master fuel trip without the postpurge.

7.6.1.4 Fluidized bed boilers that have multiple beds (sometimes called zones, sections, or compartments) shall utilize a restrictive pattern of bed start-up and shutdown and shall prohibit random bed operation.

7.6.1.4.1 In such cases, bed sequencing shall be specified by the manufacturer's operating instructions and verified by actual experience with the unit.

7.6.1.4.2 The first bed section shall have reached a predetermined ignition temperature before fuel is introduced.

7.6.1.4.3 Beds adjacent to an active bed shall have reached a predetermined ignition temperature before fuel is introduced.

7.6.1.5 Purge and light-off shall be performed under the following basic operating philosophy, which significantly improves the margin of operating safety, particularly during start-up:

(1) The number of equipment manipulations necessary shall be minimized, thereby minimizing exposure to operating errors or equipment malfunction.
(2) The hazard of dead pockets in the gas passes and the accumulation of combustibles shall be minimized by continuously diluting the contents of the furnace with large quantities of air.

7.6.1.5.1 The basic start-up procedure shall incorporate the requirements in 7.6.1.5.1.1 through 7.6.1.5.1.6.

7.6.1.5.1.1 All dampers and burner air registers shall be placed in a predetermined open position.

7.6.1.5.1.2 A unit purge with the air registers and dampers in the position specified in 7.6.1.5.1.1 shall be completed. The bed shall be purged while in the fluidized or semifluidized condition.

Copyright 2014 National Fire Protection Association (NFPA). Licensed, by agreement, for individual use and download on October 4, 2014 to LEADER and READER for designated user PATTARAPORN SRITRAKOOL. No other reproduction or transmission in any form permitted without written permission of NFPA. For inquires or to report unauthorized use, contact licensing@nfpa.org.

7.6.1.5.1.3 Prior to being placed into operation, components (e.g., sulfur burners, soot cleaning systems, electrostatic precipitators, fired reheaters) containing sources of ignition energy shall be purged for not less than 5 minutes or five volume changes of that component, whichever is greater. This purge shall be permitted to be done concurrently with the unit purge.

7.6.1.5.1.4 The bed warm-up cycle shall start after the purge is complete.

(A) Airflow through the bed shall be permitted to be reduced below the purge requirements, depending on the process constraints.

(B) Some design of multizone fluidized beds shall be permitted to require slumping those beds that are not being heated for start-up.

(C) Fluidized beds shall be permitted to be warmed up with the bed in a slumped or fluidized mode.

7.6.1.5.1.5 Fluidized bed boilers shall be warmed following the procedures and the warm-up rates specified by the manufacturer.

7.6.1.5.1.6 Fuel input that necessitates ignition by the bed material shall not be fed into the bed until the average bed temperature has reached 760°C (1400°F).

(A) A lower fuel input temperature limit shall be permitted, provided the temperature has been verified through test or actual experience as being capable of igniting the fuel. *(See Annex H.)*

(B) In no case shall the temperature be lower than 482°C (900°F) for coal or 593°C (1100°F) for oil and natural gas.

7.6.1.5.2 Modifications.

7.6.1.5.2.1 Each boiler shall be tested during initial start-up to determine whether any modifications to the procedures specified in 7.6.1.5.1 are necessary to obtain ignition or to satisfy other design limitations during light-off and warm-up.

7.6.1.5.2.2 Modifications in the basic operating philosophy defined in 7.6.1.5 shall not be made.

7.6.2 Operational Requirements.

7.6.2.1 Cold Start.

7.6.2.1.1 Preparation for starting shall include a thorough inspection and shall verify the following:

(1) The furnace and gas passages are in good repair and free of foreign material.
(2) All personnel are evacuated from the unit and associated equipment, all access and inspection doors are closed, and all equipment and instrumentation are ready for operation.
(3) All airflow and flue gas flow control dampers have been operated through their full range to check the operating mechanism.
(4) All adjustable individual burner dampers or registers have been operated through their full range to check the operating mechanism.
(5) All safety shutoff valves are operational and closed, and ignition sparks are de-energized.
(6) The feeder equipment is effectively isolated to prevent the leakage of fuel or sorbent into the furnace and to prevent hot air or flue gas from the fluidized bed from leaking back into the feed system.
(7) The drum water level is established in drum-type boilers, circulating flow is established in forced circulation boilers, or minimum water flow is established in once-through boilers.
(8) The feeders and associated equipment are calibrated and ready for operation.
(9) Energy is supplied to the control system and to the safety interlocks.
(10) *The oxygen analyzer and carbon monoxide or combustibles analyzer, if provided, are operating, the carbon monoxide or combustibles indication is at zero, and oxygen indication is at maximum.
(11) A complete functional check of the safety interlocks has been made, at minimum, after system maintenance.
(12) A complete periodic operational test of each igniter has been made as follows:
    (a) Frequency of testing is dependent on the design and operating history of each individual unit and ignition system.
    (b) As a minimum, a test shall be performed during every start-up following overhaul or other maintenance.
    (c) A test shall be integrated into the starting sequence and shall follow the unit purge and precede the admission of any burner fuel.
(13) Individual igniters or groups of igniters shall be permitted to be tested while the unit is in service as follows:
    (a) Such tests shall be made with no main fuel present in the igniter's associated burner.
    (b) The burner air register shall be in its start-up or light-off position as described in the established operating procedure.
(14) *The furnace contains the required bed inventory as defined by the manufacturer or determined by test.

7.6.2.1.2 Starting Sequence. The starting sequence shall be performed in the order of 7.6.2.1.2.1 through 7.6.2.1.2.11 except where variations are permitted by the boiler manufacturer.

7.6.2.1.2.1 The unit shall be prepared for operation, and the following shall be verified:

(1) Required cooling water flow to critical components shall be ensured.
(2) Verification that the plant air, instrument air, and service steam systems are operational shall be made.

7.6.2.1.2.2 Verification of the existence of an open flow path from the inlet(s) of the FD fans through the furnace space and into the stack shall be made.

7.6.2.1.2.3 The flue gas cleanup system, ash transportation system, and gas recirculation fans shall be started as specified by the equipment manufacturers and under the following conditions:

(1) Where provided, regenerative-type air heaters shall be started as specified by the manufacturer.
(2) The air heater soot blower shall be operated as specified by the air heater manufacturer.

7.6.2.1.2.4 An ID fan shall be started, then an FD fan(s) shall be started in accordance with the manufacturer's instructions and in accordance with the following:

(1) Subsystems associated with these fans, such as lube oil systems and cooling systems, shall be started as defined by the supplier.
(2) Additional ID or FD fans shall be started in accordance with 7.5.3.

Copyright 2014 National Fire Protection Association (NFPA). Licensed, by agreement, for individual use and download on October 4, 2014 to LEADER and READER for designated user PATTARAPORN SRITRAKOOL. No other reproduction or transmission in any form permitted without written permission of NFPA. For inquires or to report unauthorized use, contact licensing@nfpa.org.

7.6.2.1.2.5 Dampers and air registers shall be opened to the purge position. For duct burners with an inlet damper or blower (if provided), the inlet damper shall be opened to the purge position and the blower shall be running to allow boiler airflow purge through the duct burner.

7.6.2.1.2.6 The bed and boiler enclosure shall be purged with not less than five volumetric changes but, in any event, for a continuous period of not less than 5 minutes, under the following conditions:

(1) A freeboard purge without air passing through the bed material shall be deemed as not meeting purge criteria.
(2) The purge shall include the air and flue gas ducts, air heater(s), warm-up burners(s), windbox(es), and bed(s).
(3) Purge rate shall not be less than 25 percent of design full load mass airflow.

7.6.2.1.2.7 Gas recirculation systems present special problems with respect to ensuring a complete unit purge. The boiler manufacturer's specifications on gas recirculation fan operation during purge and light-off shall be followed.

7.6.2.1.2.8 Bed height, as defined by the manufacturer, shall be established under the following conditions:

(1) Bed height shall be adjusted by adding sorbent or inert solids or by draining excess bed material.
(2) FD and ID fans shall remain in operation; solid fuel feeders shall remain off.

7.6.2.1.2.9 The bubbling fluidized bed starting procedure shall be as follows *(see 7.6.2.1.2.10 for circulating fluidized bed)*:

(1) The bed warm-up burner rate shall not exceed the boiler manufacturer's specifications.
(2) Reduced combustion airflow through the bed is permitted for warming up the bed sections. However, in no event shall total air through the unit be reduced below purge rate.
(3) Dampers shall be permitted to be closed on bed sections that are not to be fired.
(4) Burners shall be started in accordance with Sections 7.7 and 7.8, as applicable. If the first burner fails to light within the established trial for ignition period after admission of fuel, the unit shall be repurged before a second trial.
(5) The bed shall continue to be heated at a rate specified by the manufacturer. The required bed level shall be maintained by adding sorbent or inert solids as needed.
(6) Fuel input that necessitates ignition by the bed material shall not be fed into the bed until the average bed temperature for the section being started meets the requirements of 7.6.1.5.1.6.
(7) Warm-up burners shall remain in service until the stable ignition of this fuel has been established.
(8) The duct temperature shall be maintained within the manufacturer's specified limits.
(9) Verification that the fuel is igniting shall be made by watching for a steady increase in bed temperature and a decreasing oxygen level, and the following modifications shall be made:
    (a) Fuel flow shall be increased to maintain bed temperature as necessary.
    (b) Airflow shall be increased as necessary to maintain the desired oxygen level.
    (c) In the case of solid fuel, if the main fuel has been fed for more than 90 seconds or a period established by the manufacturer without an increase in bed temperature, solid fuel feeding shall be discontinued until the reason for ignition failure is determined.
(10) The active bed area shall be expanded by activating idle bed sections according to steam load demands by following the manufacturer's recommended sequence.

7.6.2.1.2.10 The circulating fluidized bed starting procedure shall be as follows:

(1) The bed warm-up burner rate shall not exceed the boiler manufacturer's specifications.
(2) After the first bed warm-up burner has been placed in service, the bed material and refractory shall be heated at the manufacturer's specified rate.
(3) Warm-up burners shall be added, if necessary, to maintain the required bed heat-up rate, and the following procedures shall be completed:
    (a) Any fans and blowers that were shut down for the warm-up cycle shall be placed back in service when the bed temperature reaches the required temperature.
    (b) Preparation to admit the main fuel shall be made.
(4) Fuel input that necessitates ignition by the bed material shall not be fed into the bed until the average bed temperature meets the requirements of 7.6.1.5.1.6.
(5) Warm-up burners shall remain in service until the stable ignition of the fuel has been established.
(6) Verification that the fuel is igniting shall be made by watching for a steady increase in bed temperature and a decrease in oxygen, and the following modifications shall be made:
    (a) Warm-up burners shall be removed, and fuel flow shall be increased to maintain bed temperature at the recommended level.
    (b) Airflow shall be increased as necessary to maintain the desired oxygen level.
    (c) In the case of solid fuel, if fuel has been fed for more than 90 seconds or for a period established by the manufacturer without an increase in bed temperature, solid fuel feeding shall be discontinued until the reason for ignition failure is determined.

7.6.2.1.2.11 The on-line metering combustion control (unless designed specifically for start-up procedures) shall not be placed in automatic service until the following have been accomplished:

(1) A predetermined minimum main fuel input has been exceeded.
(2) Stable bed temperature conditions have been established.
(3) All manual control loops are operating without an error signal between their set point and process feedback.
(4) Airflow control is on automatic.

7.6.2.2 Normal Operation.

7.6.2.2.1 Firing Rate.

7.6.2.2.1.1 The firing rate shall be regulated by increasing or decreasing the fuel and air supply simultaneously to all fuel ports or bed sections, maintaining the required air-fuel ratio continuously at all firing rates.

7.6.2.2.1.2 The requirement in 7.6.2.2.1.1 shall not eliminate the requirements for air lead and lag during changes in the fuel-firing rate.

Copyright 2014 National Fire Protection Association (NFPA). Licensed, by agreement, for individual use and download on October 4, 2014 to LEADER and READER for designated user PATTARAPORN SRITRAKOOL. No other reproduction or transmission in any form permitted without written permission of NFPA. For inquires or to report unauthorized use, contact licensing@nfpa.org.

7.6.2.2.2 For those applications where gas or oil is fired, the firing rate shall be regulated by flow control or pressure control valves or devices of this type and shall not be regulated by modulating the shutoff valves, which shall be fully open or completely closed.

7.6.2.2.3 Fuel feed rates and transport airflow shall be maintained between the maximum and minimum limits specified by the boiler manufacturer or, preferably, as determined by trial.

7.6.2.2.3.1 These trials shall test for minimum load under stable bed temperature, fluidization, and required combustion conditions as follows:

(1) With all feeders in service and combustion controls on automatic
(2) With different combinations of feeders in service and combustion controls on automatic

7.6.2.2.3.2 Where changes occur to the manufacturer's maximum and minimum limits because of various feeder combinations and different fuel conditions, additional testing shall be required to establish the new limits.

7.6.2.2.4 If a lower minimum load is required than the lowest load that can be obtained with all feeders at minimum speed, the feeder(s) (and associated bed sections if applicable) shall be removed from service.

7.6.2.2.4.1 The remaining feeder(s) shall be operated at a fuel rate above the minimum required for stable operation.

7.6.2.2.4.2 The minimum fuel rate shall be determined by tests with various combinations of fuel distribution and excess air.

7.6.2.2.4.3 These tests shall reflect the most restrictive conditions.

7.6.2.2.5* Bed Temperature.

7.6.2.2.5.1 The stable operating philosophy of a fluidized bed shall be to maintain a bed temperature greater than 760°C (1400°F) and to initiate a main fuel trip below this temperature if the required warm-up burner(s) is not in service.

7.6.2.2.5.2 Lower operating and trip temperatures for fuels other than natural gas shall be permitted [but not lower than 649°C (1200°F) for coal and fuel oil], provided the temperatures have been verified through test or actual experience to maintain stable combustion of the fuel.

7.6.2.2.6 Airflow.

7.6.2.2.6.1 Total airflow shall not be reduced below 25 percent of full load airflow.

7.6.2.2.6.2 Airflow shall not be reduced below that required to maintain stable fluidization conditions within active beds or bed compartments.

7.6.2.3 Normal Shutdown.

7.6.2.3.1 When the unit is being taken out of service, the boiler load shall be brought down to a minimum.

7.6.2.3.2 After the boiler load is reduced, either the option in 7.6.2.3.2.1 or the option in 7.6.2.3.2.2 shall be followed for normal shutdown.

7.6.2.3.2.1 If the unit is scheduled to be cooled and opened for maintenance, the main fuel shall be tripped and the following conditions observed:

(1) The forced draft and induced draft fans shall be allowed to remain in operation.
(2) Following a 5 minute postpurge, fans shall be allowed to operate until the unit is cooled for maintenance.

7.6.2.3.2.2 If the unit is scheduled to be restarted soon, the fans shall be permitted to be tripped after the minimum period needed to remove volatiles and burn the fuel remaining in the bed from the furnace after the main fuel has been tripped, as indicated by a drop in bed temperature and an increase in oxygen reading. The fans shall not be tripped until there is positive indication of fuel burnout.

7.6.2.4 Normal Hot Restart.

7.6.2.4.1* When a unit is restarted after it has been tripped or after the furnace has been bottled up, the purge cycle outlined in 7.6.1.5.1 and the fuel header leak test specified by 7.7.5.2.1.2 and 7.8.5.2.1.2 shall not be required prior to introduction of main fuel, provided the bed temperature is above the main fuel temperature specified in 7.6.1.5.1.6.

7.6.2.4.2* If the bed temperature has dropped below the main fuel temperature permissible during the shutdown, a unit purge shall be required as outlined in 7.6.1.5.

7.6.2.5 Emergency Shutdown — Master Fuel Trip.

7.6.2.5.1 With the initiation of a master fuel trip due to any of the emergency conditions listed in 7.6.2.5.2 and 7.6.2.5.3, all fuel shall be stopped from entering the boiler.

7.6.2.5.2 Conditions Resulting in Mandatory Automatic Master Fuel Trips. A master fuel trip shall result from any of the following conditions *(see Section 7.9)*:

(1) Loss of any ID or FD fan required to sustain combustion *(See Section 7.5.)*
(2) Furnace pressure in excess of the design operating pressure by a value recommended by the manufacturer *(See Section 7.5.)*
(3) Insufficient drum level (a short time delay as established by the manufacturer is permitted)
(4) Loss of boiler circulation pumps or flow, if applicable
(5) Total airflow decrease below the purge rate by 5 percent of the full load airflow
(6) Bed temperature falling below the value specified in 7.6.2.2.5 when the main fuel is being admitted to bed and no warm-up burner is established
(7) All fuel inputs zero and bed temperature not adequate once any fuel has been admitted to the unit

7.6.2.5.3 Conditions Resulting in Mandatory Master Fuel Trips with Alarms — Not Necessarily Automatically Initiated. A master fuel trip shall result from any of the following conditions:

(1) Loss of energy supply for boiler control, burner management, or interlock systems
(2) Cooling water flow for fluidized bed system components less than minimum
(3) Plant air or instrument air pressure low (process requirement only)
(4) Bed temperature high — trip to prevent unit damage resulting from excessive temperature
(5) Furnace pressure falling below the design operating pressure by a value recommended by the manufacturer

7.6.2.5.4 Actions upon Initiating a Master Fuel Trip. Upon the occurrence of a master fuel trip as a result of any of the

Copyright 2014 National Fire Protection Association (NFPA). Licensed, by agreement, for individual use and download on October 4, 2014 to LEADER and READER for designated user PATTARAPORN SRITRAKOOL. No other reproduction or transmission in any form permitted without written permission of NFPA. For inquires or to report unauthorized use, contact licensing@nfpa.org.

emergency conditions in 7.6.2.5.2 and 7.6.2.5.3, all fuel shall be stopped from entering the boiler.

7.6.2.5.4.1 Oil and gas safety shutoff valves shall be tripped and igniter sparks de-energized.

7.6.2.5.4.2 The fuel, sorbent, and bed feed system shall be tripped.

7.6.2.5.4.3 Electrostatic precipitators, fired reheaters, or other ignition sources shall be tripped.

7.6.2.5.4.4 Master fuel trips shall operate in a manner to stop all fuel flow into the furnace within a period that does not allow a dangerous accumulation of fuel in the furnace.

7.6.2.5.4.5 The owner shall have the option of allowing a master fuel trip to initiate a time delay FD fan and ID fan trip. *(See 7.6.2.3.2.2.)*

7.6.2.5.4.6 Where the design allows, char recirculation shall be stopped.

7.6.2.5.5 Actions Following a Master Fuel Trip.

7.6.2.5.5.1 The sorbent, bed material feed, and bed material drain system shall be permitted to be restarted as necessary.

7.6.2.5.5.2 The owner shall have the option under conditions where there is low-low drum water level and furnace outlet temperature is above 482°C (900°F) to stop the flow of fluidizing air immediately.

(A) An FD fan shall be permitted to be tripped to stop the flow of fluidizing air.

(B) The ID fan shall not be tripped.

7.6.2.5.5.3 If the option for tripping fans on a master fuel trip is not exercised, the fans that are operating after the master fuel trip shall be continued in service, and the airflow shall not be increased immediately by deliberate manual or automatic control action.

7.6.2.5.5.4 Except as permitted in 7.6.2.5.5.1, equipment that is tripped at the time of or following a master fuel trip shall not be restarted until conditions have stabilized and it is determined that the equipment can be safely restarted.

7.6.2.6 Emergency Shutdown — Main Fuel Trip.

7.6.2.6.1 With the initiation of a main fuel trip due to any of the emergency conditions listed in 7.6.2.6.2 or 7.6.2.6.3, all main fuel shall be stopped from entering the boiler.

7.6.2.6.2 Conditions That Result in Mandatory Automatic Main Fuel Trips. A main fuel trip shall result from any of the following conditions *(see Section 7.9)*:

(1) Master fuel trip
(2) Inadequate bed temperature as defined by the boiler designer with warm-up burners in service *(See 7.6.1.5.1.6.)*
(3) Inadequate bed temperature as defined by the boiler designer without warm-up burners in service *(See 7.6.2.2.5.)*
(4) Inadequate airflow to fluidize the bed as defined by the boiler designer

7.6.2.6.3 Mandatory Main Fuel Trips — Not Necessarily Automatically Initiated. A main fuel trip shall result from inadequate solids inventory.

7.6.2.7 Procedure for Purging after a Master Fuel Trip.

7.6.2.7.1 Fans that are operating after the master fuel trip shall be continued in service.

7.6.2.7.2 The airflow shall not be increased or decreased by automatic control action.

7.6.2.7.3 Changes in the airflow shall be performed in accordance with established operating procedures.

7.6.2.8 Loss of Draft Fans.

7.6.2.8.1 When the emergency trip was caused by loss of ID fans or ID fans also have tripped, all dampers in the air and flue gas passages of the unit shall be opened slowly to the fully open position to create as much natural draft as possible to ventilate the unit.

7.6.2.8.2 Opening fan dampers shall be timed or controlled to ensure that positive or negative furnace pressure transients beyond design limits do not occur during fan coastdown.

7.6.2.8.3 It shall be permitted to start the fan(s) in accordance with 7.5.3 and to increase the airflow gradually to the purge rate.

7.6.2.9 After Emergency Shutdown. The following actions shall be taken after an emergency shutdown:

(1) The unit shall be shut down in accordance with 7.6.2.3.
(2) If conditions for a hot restart in accordance with 7.6.2.4.1 exist following an emergency shutdown, a hot restart shall be permitted.

7.6.3 Emergency Conditions Not Requiring Shutdown or Trip.

7.6.3.1 Installations that include multiple ID fans, FD fans, or both shall have a control system capable of reducing the fuel flow to match the available airflow in the event of a loss of a fan or fans. Otherwise, tripping of the unit shall be mandatory.

7.6.3.2 If an air deficiency develops while the main fuel is being fired, the fuel shall be reduced until the specified air-fuel mixture ratio has been restored.

7.6.3.3 Momentary interruptions in the main fuel supply or changes in fuel quality shall not require a unit trip, provided the bed temperature remains above the limits defined in 7.6.2.2.5.

7.6.3.3.1 Use of warm-up burners shall be permitted to maintain bed material temperature.

7.6.3.3.2 Use of lances also shall be permitted, provided the bed temperature is above the minimum sustained ignition value for that fuel.

7.6.3.3.3 It shall be permitted to return to service a fuel feeder subsystem that had malfunctioned before the bed temperature falls below the main fuel temperature trip limit.

7.6.4 General Operating Requirements — All Conditions.

7.6.4.1 Prior to allowing personnel to enter a unit, positive action shall be taken to prevent fuel from entering the furnace.

7.6.4.2 Ignition.

7.6.4.2.1 Burners shall not be lighted one from another or from the hot refractory.

7.6.4.2.2 The igniter for the burner shall always be used.

7.6.4.3 When feeder or transport line maintenance is being performed with the boiler in service, positive means to isolate the feeder or transport line from the boiler shall be used.

Copyright 2014 National Fire Protection Association (NFPA). Licensed, by agreement, for individual use and download on October 4, 2014 to LEADER and READER for designated user PATTARAPORN SRITRAKOOL. No other reproduction or transmission in any form permitted without written permission of NFPA. For inquires or to report unauthorized use, contact licensing@nfpa.org.

7.6.4.4 Total Heat Input.

7.6.4.4.1 The total heat input within a burner or furnace zone, or both, shall not exceed the maximum limits specified for the equipment by the manufacturer or as established by test.

7.6.4.4.2 The heat input from multiple fuels shall be totalized where a burner or furnace zone, or both, simultaneously fires more than one fuel.

7.7 Sequence of Operations for Gas-Fired Warm-Up Burners.

7.7.1 General.

7.7.1.1 The additional mandatory requirements in Section 7.7 shall apply to burning fuel gas in warm-up burners.

7.7.1.2 All installed piping arrangements shall meet the functional requirements of this code.

7.7.1.3 Fuel gas piping shown in Figure 7.7.1.3(a) through Figure 7.7.1.3(e) shall be used in conjunction with Section 7.7.

7.7.1.4 Alternative arrangements to those shown in Figure 7.7.1.3(a) through Figure 7.7.1.3(e) that satisfy the functional requirements in Section 7.7 and that are acceptable to the AHJ shall be permitted.

7.7.2 Fuel Supply Subsystem — Fuel Gas. The requirements for the fuel gas supply subsystem gas as defined in 7.4.3.1 shall apply to all fuel gas–fired warm-up burners.

7.7.3 Requirements for Fuel Gas Warm-Up Burner Subsystem.

7.7.3.1* Stable Flame Limits.

7.7.3.1.1 The warm-up burner subsystem shall be designed so that the burner inputs are supplied to the furnace continuously and within their stable flame limits.

7.7.3.1.2 Class 1 or Class 2 igniters, as demonstrated by test in accordance with 7.7.3.3, shall be permitted to be used to maintain stable flame.

7.7.3.2 Where Class 3 or Class 3 Special igniters are used, the limits of stable flame for each burner subsystem producing a separate flame envelope shall be determined by tests.

7.7.3.2.1 These tests shall verify that transients generated in the fluidized bed and in the fuel and air subsystems do not adversely affect the burners in operation.

7.7.3.2.2 These tests shall include the expected range of available fuels.

7.7.3.2.3 These tests shall be repeated after any combustion process modification and after switching to any fuel not previously tested.

7.7.3.3 Where Class 1 or Class 2 igniters are used and where the system is designed for firing without ignition support, the tests required in 7.7.3.2 shall be performed over the operating range.

This legend applies to Figure 7.7.1.3(a) through Figure 7.7.1.3(e).

- A Burner header shutoff valve
- B Individual burner safety shutoff valve
- C_1 Burner header atmospheric vent valve
- C_2 Individual burner atmospheric vent valve
- C_4 Igniter header atmospheric vent valve
- C_5 Individual igniter atmospheric vent valve
- D Burner header fuel control valve
- D_1 Burner header fuel bypass control valve
- E Igniter header safety shutoff valve
- F Igniter fuel control valve
- G Individual igniter safety shutoff valve
- H Recirculating valve
- I Charging valve (optional — required to be self-closing)
- J Constant fuel pressure regulator
- K Pressure relief valve
- L Leakage test connection
- M Flowmeter
- N Low atomizing media pressure switch
- O Strainer or cleaner
- P Restricting orifice
- Q Low fuel pressure switch
- Q_1 Low fuel supply pressure switch [pressure switch low (PSL)]
- R High fuel pressure switch
- R_1 High fuel pressure switch (alternate location)
- R_2 High fuel supply pressure switch [pressure switch high (PSH)]
- S Pressure gauge
- T Manual shutoff valve
- U Temperature indicator
- V Burner header atmospheric vent valve, manual
- Y Check valve

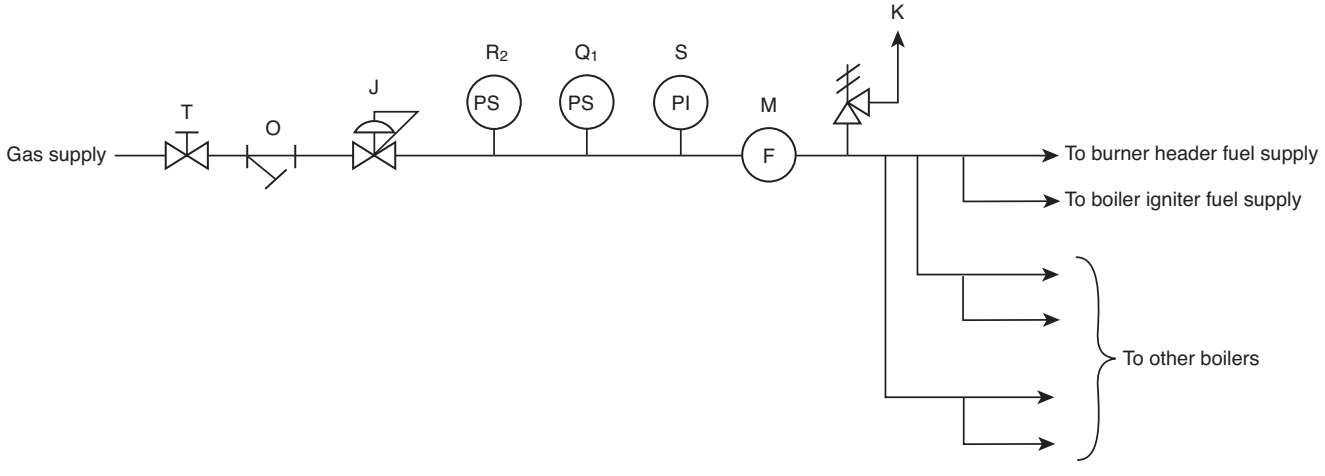

FIGURE 7.7.1.3(a) Fuel Gas Supply to Power House.

Copyright 2014 National Fire Protection Association (NFPA). Licensed, by agreement, for individual use and download on October 4, 2014 to LEADER and READER for designated user PATTARAPORN SRITRAKOOL. No other reproduction or transmission in any form permitted without written permission of NFPA. For inquires or to report unauthorized use, contact licensing@nfpa.org.

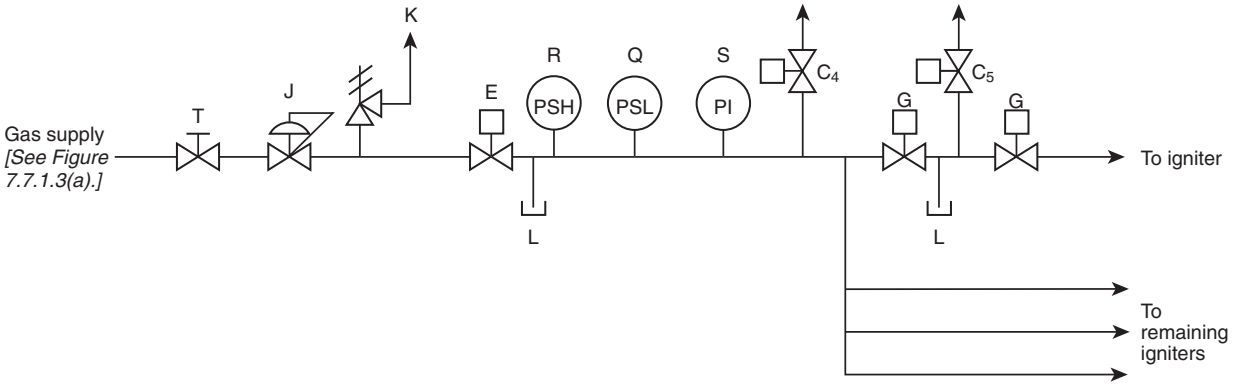

FIGURE 7.7.1.3(b) Fuel Gas Ignition System — Multiple Igniters Supplied from a Common Header (Automatic).

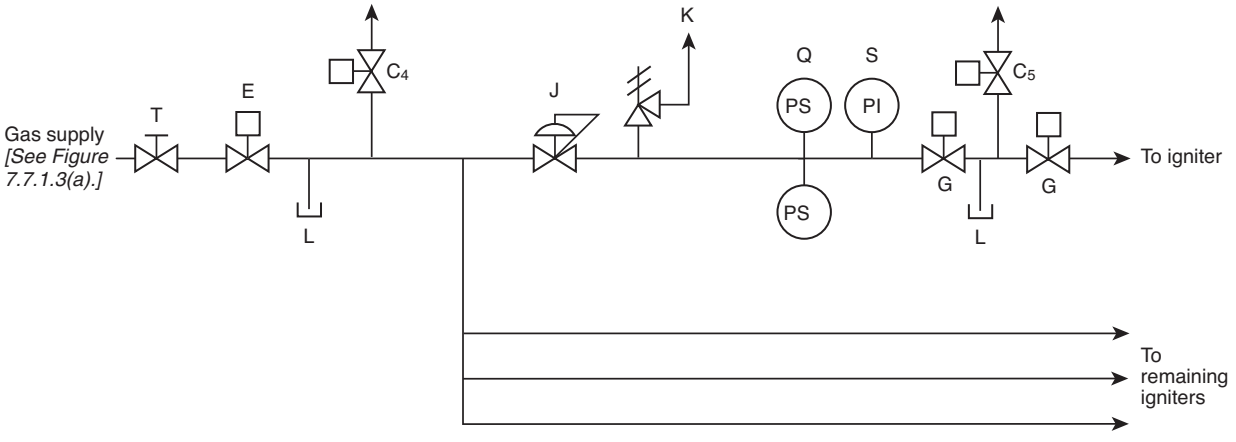

FIGURE 7.7.1.3(c) Fuel Gas Ignition System — Individually Controlled Igniters (Automatic).

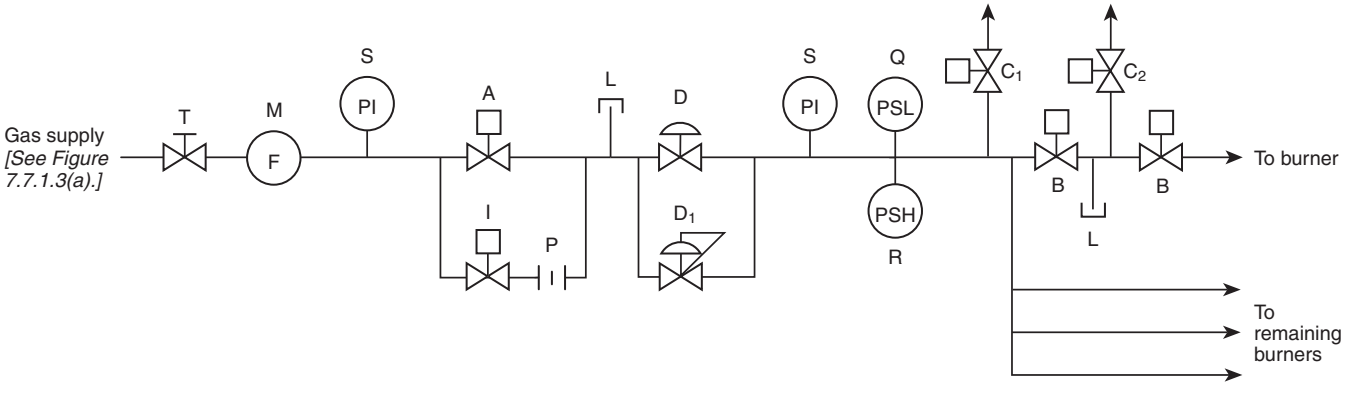

FIGURE 7.7.1.3(d) Fuel Gas Burner/Lance System Master Flow Control Valve for Multiple Burners (Automatic).

7.7.3.3.1 In addition, the tests in 7.7.3.2 shall be performed with the ignition subsystem in service to verify that the igniters that are furnished meet the requirements of the class specified in the design.

7.7.3.3.2 Any resulting extended turndown range shall be available only when Class 1 igniters are in service and flame is proven.

7.7.3.4 Provisions shall be made for visual observation of conditions at the burner ignition zone and for flame detection equipment.

7.7.3.5 Maintenance and Housekeeping.

7.7.3.5.1 The burner equipment shall be located in an environment that allows convenient access for maintenance.

Copyright 2014 National Fire Protection Association (NFPA). Licensed, by agreement, for individual use and download on October 4, 2014 to LEADER and READER for designated user PATTARAPORN SRITRAKOOL. No other reproduction or transmission in any form permitted without written permission of NFPA. For inquires or to report unauthorized use, contact licensing@nfpa.org.

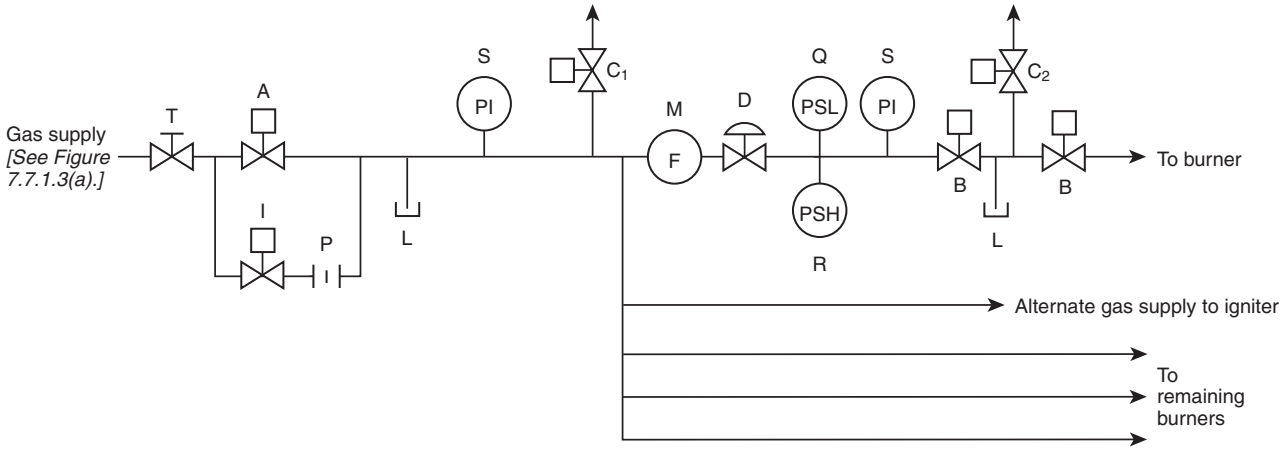

FIGURE 7.7.1.3(e) Fuel Gas Burner/Lance System Individual Fuel Control Valve (Automatic).

7.7.3.5.2 Special attention shall be given to fire hazards imposed by leakage or rupture of piping at the burner.

7.7.3.5.3 The requirements for maintenance and housekeeping described in Section 4.4 shall be practiced.

7.7.3.6 All burner safety shutoff valves shall be located close to the burner to minimize the volume of fuel left in the burner lines downstream of the burner valves.

7.7.4 Flame Monitoring and Tripping System.

7.7.4.1 Each burner shall be supervised individually, and on detection of loss of burner flame, the safety shutoff valve for the burner experiencing the loss shall automatically close.

7.7.4.2 On detection of loss of all warm-up burner flame or partial loss of flame to the extent that hazardous conditions exist, a trip of the warm-up burner system shall be automatically initiated.

7.7.5 Sequence of Operations.

7.7.5.1 General.

7.7.5.1.1 The sequence of operations in 7.7.5 shall be followed whether the burner is operated manually or certain functions are accomplished by interlocks or automatic controls *[see Figure 7.7.1.3(a) through Figure 7.7.1.3(e)]*.

7.7.5.1.2 Burner Operation.

7.7.5.1.2.1 Burners shall be placed in service in a sequence specified by operating instructions and verified by actual experience.

7.7.5.1.2.2 Burners shall be placed in service as necessary, with fuel flows and individual registers or dampers positioned for light-off in accordance with established operating procedures.

7.7.5.1.2.3 The fuel pressure at the burner header for all burners served by a single control valve shall be permitted to be used as a guide in maintaining the necessary fuel flow for each burner and shall be maintained automatically within prescribed limits as additional burners are placed in service.

7.7.5.1.2.4 The total number of burners placed in service shall be the number necessary to accomplish both of the following within the rate of rise limits specified by the boiler manufacturer:

(1) Raise boiler pressure or temperature
(2) Raise bed temperature

7.7.5.1.3 Burner Testing.

7.7.5.1.3.1 Each burner shall be tested during initial start-up to determine whether any modifications to the procedures specified in 7.7.5.2 are needed to establish ignition or to address other design limitations during light-off and warm-up.

7.7.5.1.3.2 For burners that are purged with the registers in the normal operating position, it shall be permissible to momentarily close the registers of the burner being lighted if required to establish ignition.

7.7.5.1.3.3 Modifications in the basic procedures shall be allowed only if required to obtain light-off.

7.7.5.1.3.4 Paragraphs 7.6.1.5.1.1 through 7.6.1.5.1.6 shall be followed, thereby satisfying the basic objectives in 7.6.1.5.

7.7.5.2 Functional Requirements.

7.7.5.2.1 Cold Start.

7.7.5.2.1.1 Preparation for starting shall include a thorough inspection and shall verify the following:

(1) All safety shutoff valves are closed, and all sparks are deenergized.
(2) Oil ignition systems meet the requirements of Section 7.8.
(3) Fuel system vents are open and venting to atmosphere outside the boiler room; lines are drained and cleared of condensate and other foreign material.
(4) The correct drum water level is established in drum-type boilers, circulating flow is established in forced circulation boilers, or minimum water flow is established in once-through boilers as established by the boiler manufacturer.
(5) Burner elements and igniters are positioned in accordance with the manufacturer's specification.
(6) Energy is supplied to the control and interlock systems.
(7) Meters or gauges are indicating fuel header pressure to the unit.

7.7.5.2.1.2 Starting Sequence. The starting sequence shall be performed in the order of 7.7.5.2.1.2(A) through 7.7.5.2.1.2(O):

Copyright 2014 National Fire Protection Association (NFPA). Licensed, by agreement, for individual use and download on October 4, 2014 to LEADER and READER for designated user PATTARAPORN SRITRAKOOL. No other reproduction or transmission in any form permitted without written permission of NFPA. For inquires or to report unauthorized use, contact licensing@nfpa.org.

(A)* An operational leak test of each fuel header piping system shall be performed in accordance with established procedures while maintaining at least purge rate airflow. Successful completion of the leak test shall be performed prior to placing the gas system into operation.

(B) The fuel control valve(s) shall be closed, and the main safety shutoff valve(s) shall be opened once the requirements of 7.7.5.2.1.2(A) for leak test performance and 7.9.3.3 for permissive conditions in the furnace purge system have been satisfied.

(C) It shall be determined that the burner fuel control valve is in the light-off position, and the burner fuel bypass control valve, if provided, is set to maintain burner header fuel pressure within predetermined limits for light-off with the following conditions:

(1) The burner headers shall be vented in order to be filled with gas and to provide a flow (if necessary) so that the fuel and bypass fuel control valves function to regulate and maintain the correct pressure for burner light-off.
(2) The fuel control valve shall be opened when necessary.
(3) The time needed to vent for control of header pressure after header charging shall be evaluated and minimized.

(D) The igniter header safety shutoff valve(s) shall be opened, and the following shall be performed:

(1) It shall be confirmed that the igniter fuel control valve is holding the manufacturer's recommended fuel pressure necessary for the igniter to operate at design capacity.
(2) The igniter headers shall initially be vented in order to be filled with gas and to provide a flow (if necessary), so that the igniter fuel control valve(s) functions to regulate and maintain the fuel pressure within the design limits specified by the manufacturer for lighting the igniters.
(3) The time needed to vent for control of header pressure after header charging shall be evaluated and minimized.

(E) The air register or damper on the burner selected for light-off shall be adjusted to the position recommended by the manufacturer or by established operating procedure in accordance with the requirements of this section.

(F) The spark or other source of ignition for the igniter(s) on the burner(s) to be lit shall be initiated, and the following shall be performed:

(1) The individual igniter safety shutoff valve(s) shall be opened, and all igniter system atmospheric vent valves shall be closed.
(2) If flame on the first igniter(s) is not established within 10 seconds, the individual igniter safety shutoff valve(s) shall be closed and the cause of failure to ignite shall be determined and corrected.
(3) With airflow maintained at purge rate, repurge shall not be required, but at least 1 minute shall elapse before a retrial of any igniter is attempted.
(4) Repeated retrials of igniters without investigating and correcting the cause of the malfunction shall be prohibited.

(G) Where Class 3 special electric igniters are used, the procedures described in 7.7.5.2.1.2(A) through 7.7.5.2.1.2(C), 7.7.5.2.1.2(E), and 7.7.5.2.1.2(H) through 7.7.5.2.1.2(K) shall be used, recognizing the requirements for individual burner flame supervision.

(H) After it is certain that the igniter(s) is established and is providing the required level of ignition energy for the warm-up burner(s), the individual burner safety shutoff valve(s) shall be opened, the individual burner atmospheric vent valves shall be closed, and the following shall be performed:

(1) A master fuel trip shall be initiated when the bed temperature falls below the main fuel ignition temperature as specified in 7.6.1.5.1.6 and when the flame detection system(s) indicates that ignition has not been obtained within 5 seconds following the actual entry of fuel into the burner.
(2) Purging shall be repeated, and the condition(s) that caused the failure to ignite shall be corrected before another light-off attempt is made.
(3) For the following burner and all subsequent burners placed in operation, failure to ignite or loss of ignition for any reason on any burner(s) shall cause the fuel flow to that burner(s) to stop.
(4) All conditions required by the manufacturer or by established operating procedures for light-off shall exist before restarting a burner.

(I) After stable flame is established, the air register(s) or damper(s) shall slowly be returned to its operating position, making certain that ignition is not lost in the process. The air register shall be permitted to be opened simultaneously with the burner safety shutoff valve.

(J) Class 3 igniters shall be shut off at the end of the time trial for proving the main flame under the following conditions:

(1) It shall be verified that the stable flame continues on the burner(s) after the igniters are shut off.
(2) Systems that allow the igniters to remain in service on either an intermittent or a continuous basis shall have been tested to meet all the requirements of Class 1 igniters or Class 2 igniters with associated interlocks in service.

(K) After the burner flame is established, the burner header atmospheric vent valve shall be closed, and the following shall be performed:

(1) If the charging valve is used, the burner header atmospheric vent valve shall be closed.
(2) The fuel bypass control valve shall automatically control the burner header gas pressure.

(L) The following shall apply:

(1) The procedures of 7.7.5.2.1.2(E) through 7.7.5.2.1.2(J), for placing additional burners in service, shall be followed, as necessary, to increase bed temperature, raise steam pressure, or carry additional load.
(2) If used, automatic control of burner fuel flow and burner airflow during the lighting and start-up sequence is recommended and, if used, shall be in accordance with the requirements of 7.7.5.2.1.2(M).
(3) The fuel flow to each burner (as measured by burner fuel header pressure, individual burner flows, or other equivalent means) shall be maintained at a controlled value that is compatible with the established airflow through the corresponding burner.
(4) Total furnace airflow shall not be reduced below purge rate airflow and shall be at least that which is necessary for complete combustion in the furnace.

(M) The burner combustion control system shall not be placed in automatic until a predetermined minimum warm-up burner fuel input has been attained, the burner fuel and airflow are adjusted as necessary, and a stable flame has been established with the following exceptions:

Copyright 2014 National Fire Protection Association (NFPA). Licensed, by agreement, for individual use and download on October 4, 2014 to LEADER and READER for designated user PATTARAPORN SRITRAKOOL. No other reproduction or transmission in any form permitted without written permission of NFPA. For inquires or to report unauthorized use, contact licensing@nfpa.org.

(1) Where each individual flow control burner is provided with an individual combustion control system that maintains the correct air-fuel ratio, a stable flame, and a fire rate in accordance with the demand for the full operating range of the burner
(2) Where on-line burner combustion control is designed specifically for start-up procedures

(N) It shall be permitted to place a multiple number of igniters in service simultaneously from a single igniter safety shutoff valve, provided the igniters are supervised, so that failure of one of the group to light causes the fuel to all igniters in the group to be shut off.

(O) It shall be permitted to place in service, simultaneously, a multiple number of burners served by their corresponding multiple igniters from a single burner safety shutoff valve, provided the burners are supervised, so that failure of one of the group to light causes the fuel to all burners in the group to be shut off.

7.7.5.2.2 Normal Operation.

7.7.5.2.2.1 Except for duct burners, the firing rate shall be regulated by increasing or decreasing the fuel and air supply to maintain the air-fuel ratio within predetermined operating limits continuously at all firing rates. Changes in airflow during load changes shall lead or lag changes in fuel flow as required to ensure sufficient air for complete combustion throughout the load change.

(A) For the case in which either the air or fuel supply to a group of burners is regulated by a common device, changes in the firing rate shall be accomplished by simultaneous adjustment of air and fuel flow to all the burners in the group.

(B) For the case in which each burner in a multiple burner arrangement is equipped with independently controllable fuel and air supplies, changes in the firing rate shall be accomplished by adjusting the firing rate of each individual burner independently provided the air-fuel ratio of each individual burner is maintained within predetermined operating limits continuously at all firing rates.

(C) In the case of a duct burner, the firing rate shall be regulated by increasing or decreasing the fuel flow. An interlock shall be provided to prevent airflow to the duct burner from falling below the minimum required for combustion as recommended by the manufacturer.

7.7.5.2.2.2 The firing rate shall not be regulated by varying the fuel to individual burners by means of the individual burner safety shutoff valve(s).

(A) The individual burner safety shutoff valve(s) shall be fully open or completely closed.

(B) Intermediate settings shall not be used.

7.7.5.2.2.3 Air registers shall be set at firing positions determined by tests, except in systems provided with metering of air and fuel to each burner and designed specifically for individual burner modulating control.

7.7.5.2.2.4 The burner fuel and airflow shall be maintained within a range between the maximum and minimum limits as determined by trial, or, if trial results do not exist, as specified by the combustion equipment manufacturer(s).

(A) These trials shall test for minimum and maximum limits and stable flame under both of the following conditions:

(1) With all burners in service and combustion control on automatic
(2) With different combinations of burners in service and combustion control on automatic

(B) Where there are changes to any of the minimum and maximum limits because of equipment modifications, operating practices, or fuel conditions, retesting shall be required.

7.7.5.2.2.5 Loss of Burner Flame.

(A) On loss of an individual burner flame, that individual burner's safety shutoff valve shall be automatically closed and its vent opened immediately.

(B) The burner register shall be closed where it interferes with the air-fuel ratio supplied to any other individual burner flame.

7.7.5.2.2.6 Total airflow shall not be reduced below the purge rate.

7.7.5.2.3 Normal Shutdown.

7.7.5.2.3.1 Shutdown Order.

(A) The reverse procedure of that used during start-up shall be followed during shutdown.

(B) Burners shall be shut down sequentially, as the need for warm-up energy is reduced, by closing the individual burner safety shutoff valves, leaving the registers on these burners in firing position.

7.7.5.2.3.2 Shutdown Process.

(A) As the fuel is reduced, a sequential shutdown of the burners shall be accomplished by closing the individual burner safety shutoff valves and opening the vent valves.

(B) Registers shall be placed in the position prescribed by established operating procedure(s).

7.7.5.2.3.3 When the last individual burner safety shutoff valves are closed, the main safety shutoff valve shall be closed.

7.7.5.2.3.4 All atmospheric vent valves shall be opened to minimize the possibility of gas leaking into the boiler enclosure.

7.7.5.3 Mandatory Automatic Fuel Trip for Gas-Fired Warm-Up Burners. A warm-up burner system fuel trip of each burner or group of burners serviced by a single control valve shall result from any of the following conditions:

(1) Fuel pressure at the point of supervision below the minimum required for stable operation of the burner as established by the burner manufacturer or by trial
(2) Loss of the air supply fan or inadequate airflow to the burner
(3) Loss of all flame
(4) Last individual burner safety shutoff valve closed
(5)*High fuel gas pressure at the point of supervision above the maximum allowed for the burner
(6) Master fuel trip
(7) High duct burner discharge temperature

7.7.5.4 Emergency Conditions Not Requiring Shutdown or Trip.

7.7.5.4.1 If an air deficiency develops while flame is maintained at the burners, the fuel shall be reduced until the required air-fuel ratio has been restored.

Copyright 2014 National Fire Protection Association (NFPA). Licensed, by agreement, for individual use and download on October 4, 2014 to LEADER and READER for designated user PATTARAPORN SRITRAKOOL. No other reproduction or transmission in any form permitted without written permission of NFPA. For inquires or to report unauthorized use, contact licensing@nfpa.org.

7.7.5.4.2 If fuel flow cannot be reduced, airflow shall be increased slowly until the required air-fuel ratio has been restored.

7.7.5.5 General Operating Requirements — All Conditions.

7.7.5.5.1 Ignition.

7.7.5.5.1.1 The igniter for the burner shall be used to light the burner.

7.7.5.5.1.2 Burners shall not be lighted one from another, from hot refractory or from bed material.

7.7.5.5.2 Where the boiler is operating at low capacity with multiple burners controlled by one master flow control valve, the burner fuel pressure shall be maintained above minimum by a reduction in the number of burners in service as necessary.

7.7.5.5.3 Before maintenance is performed on the gas header, the header shall be purged in accordance with NFPA 54, *National Fuel Gas Code*.

7.8 Sequence of Operations for Oil-Fired Warm-Up Burners.

7.8.1 General.

7.8.1.1 The additional mandatory requirements in Section 7.8 shall apply to burning fuel oil in warm-up burners.

7.8.1.2 All installed piping arrangements shall meet the functional requirements of this code.

7.8.1.3* Fuel oil piping as shown in Figure 7.8.1.3(a) through Figure 7.8.1.3(h) shall be used in conjunction with Section 7.8.

7.8.1.4 Alternative arrangements to those shown in Figure 7.8.1.3(a) through Figure 7.8.1.3(h) that satisfy the functional requirements in Section 7.8 and that are acceptable to the AHJ shall be permitted.

7.8.2 Fuel Supply Subsystem — Fuel Oil. The requirements of the fuel oil supply subsystem as defined in 7.4.3.2 shall apply to all fuel oil–fired warm-up burners.

7.8.3 Requirements for Fuel Oil Warm-Up Burner Subsystem.

7.8.3.1* Stable Flame Limits.

7.8.3.1.1 The warm-up burner subsystem shall be designed so that the burner inputs are supplied to the furnace continuously and within their stable flame limits.

7.8.3.1.2 Class 1 or Class 2 igniters, as demonstrated by test in accordance with 7.8.3.3, shall be permitted to be used to maintain stable flame.

7.8.3.2 Where Class 3 or Class 3 Special igniters are used, the limits of stable flame for each burner subsystem producing a separate flame envelope shall be determined by tests.

7.8.3.2.1 The tests shall verify that transients generated in the fluidized bed and in the fuel and air subsystems do not adversely affect the burners in operation.

This legend applies to Figure 7.8.1.3(a) through Figure 7.8.1.3(h).

A	Burner header safety shutoff valve
B	Individual burner safety shutoff valve
C_1	Burner header atmospheric vent valve
C_2	Individual burner atmospheric vent valve
C_4	Igniter header atmospheric vent valve
C_5	Individual igniter atmospheric vent valve
D	Burner header fuel control valve
D_1	Burner header fuel bypass control valve
E	Igniter header safety shutoff valve
F	Igniter fuel control valve
G	Individual igniter safety shutoff valve
H	Recirculating valve
I	Charging valve (optional — required to be self-closing)
J	Constant fuel pressure regulator
K	Pressure relief valve
L	Leakage test connection
M	Flowmeter
N	Low atomizing media pressure switch
O	Strainer or cleaner
P	Restricting orifice
Q	Low fuel pressure switch [pressure switch low (PSL)]
Q_1	Low fuel pressure switch (alternate location)
Q_2	Low fuel supply pressure switch
R	High fuel pressure switch
R_1	High fuel pressure switch (alternate location)
R_2	High fuel supply pressure switch
S	Pressure gauge [pressure indicator (PI)]
T	Manual shutoff valve
U	Temperature indicator
V	Burner header atmospheric vent valve, manual
W	Scavenging valve
Y	Check valve
Z	Atomizing media pressure regulator
II	Circulating valve
QQ	Low temperature or high viscosity alarm switch
SS	Individual burner supervisory shutoff valve
T_5	Atomizing media shutoff valve

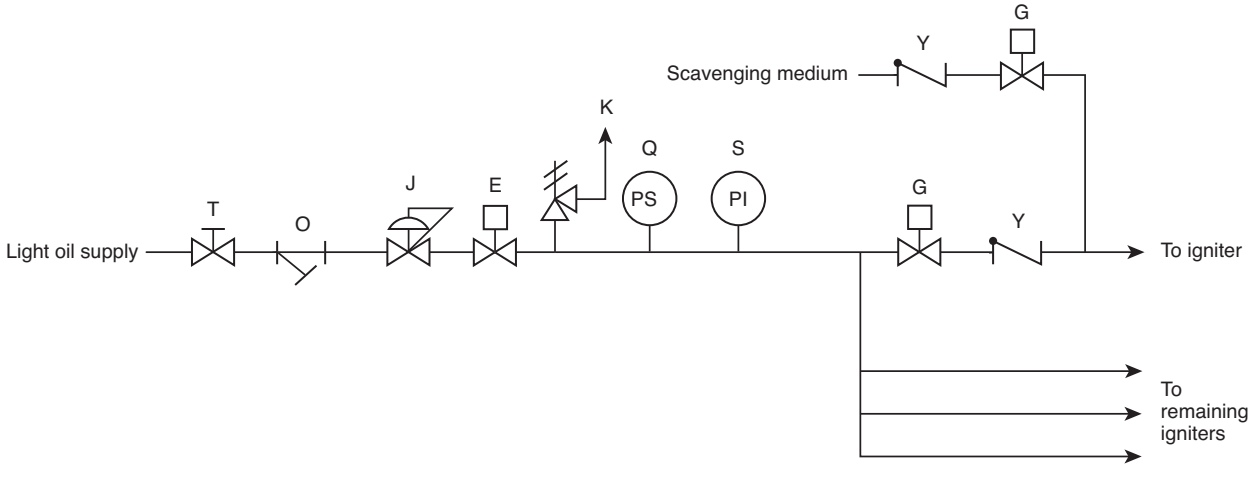

FIGURE 7.8.1.3(a) Light Oil Ignition System — Multiple Mechanically Atomized Igniters Supplied by a Common Header (Automatic).

Copyright 2014 National Fire Protection Association (NFPA). Licensed, by agreement, for individual use and download on October 4, 2014 to LEADER and READER for designated user PATTARAPORN SRITRAKOOL. No other reproduction or transmission in any form permitted without written permission of NFPA. For inquires or to report unauthorized use, contact licensing@nfpa.org.

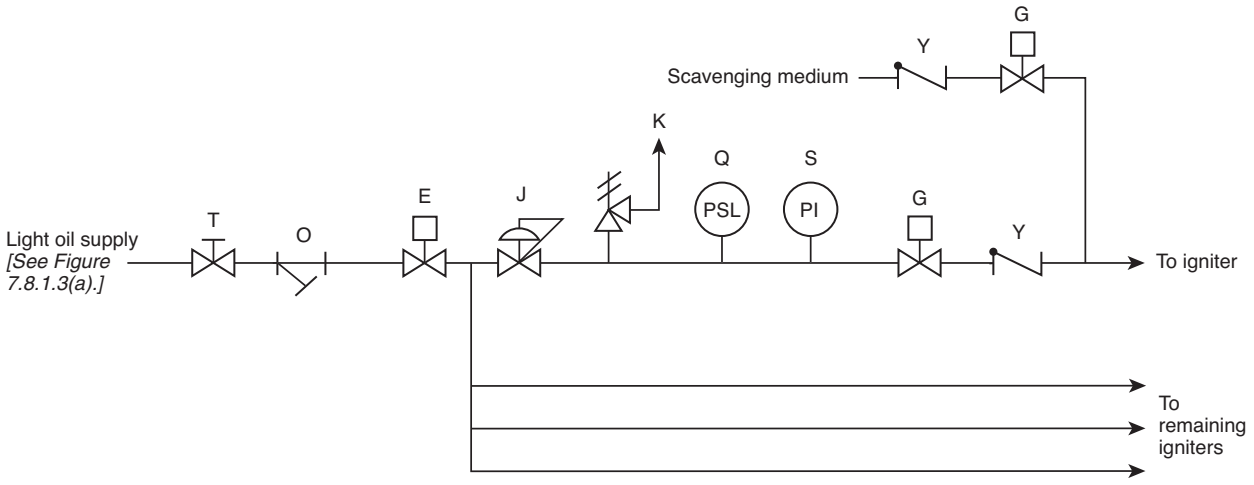

FIGURE 7.8.1.3(b) Light Oil Ignition System — Individually Controlled Mechanically Atomized Igniters (Automatic).

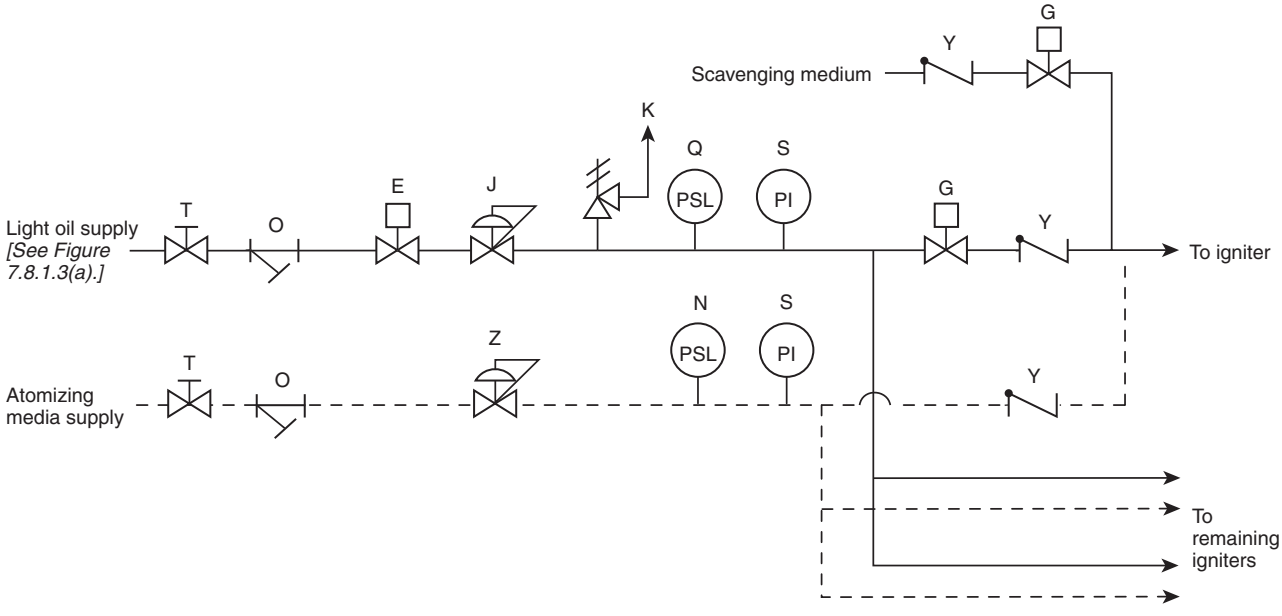

FIGURE 7.8.1.3(c) Light Oil System — Steam/Air Atomized Igniters Supplied from a Common Header (Automatic).

7.8.3.2.2 The tests shall include the expected range of available fuels.

7.8.3.2.3 The tests shall be repeated after any combustion process modification and after switching to any fuel not previously tested.

7.8.3.3 Where Class 1 or Class 2 igniters are used and where the system is designed for firing without ignition support, the tests required in 7.8.3.2 shall be performed over the operating range.

7.8.3.3.1 In addition, the tests in 7.8.3.2 shall be performed with the ignition subsystem in service to verify that the igniters that are furnished meet the requirements of the class specified in the design.

7.8.3.3.2 Any resulting extended turndown range shall be available only when Class 1 igniters are in service and flame is proven.

7.8.3.4 Provisions shall be made for visual observation of conditions at the burner ignition zone and for flame detection equipment.

7.8.3.5 Provisions shall be made for cleaning of the burner nozzle and tip.

7.8.3.6 Maintenance.

7.8.3.6.1 The burner equipment shall be located in an environment that allows convenient access for maintenance.

7.8.3.6.2 Special attention shall be given to the fire hazards imposed by leakage or rupture of piping at the burner.

Copyright 2014 National Fire Protection Association (NFPA). Licensed, by agreement, for individual use and download on October 4, 2014 to LEADER and READER for designated user PATTARAPORN SRITRAKOOL. No other reproduction or transmission in any form permitted without written permission of NFPA. For inquires or to report unauthorized use, contact licensing@nfpa.org.

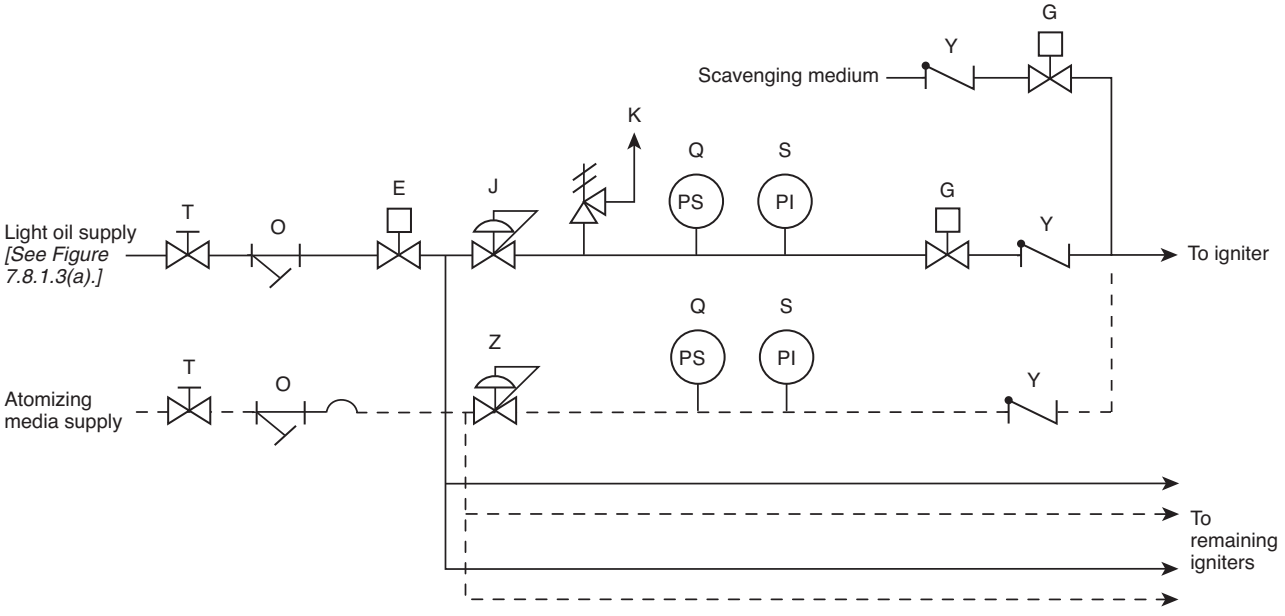

FIGURE 7.8.1.3(d) Light Oil Ignition System — Individually Controlled Steam/Air Atomized Igniters (Automatic).

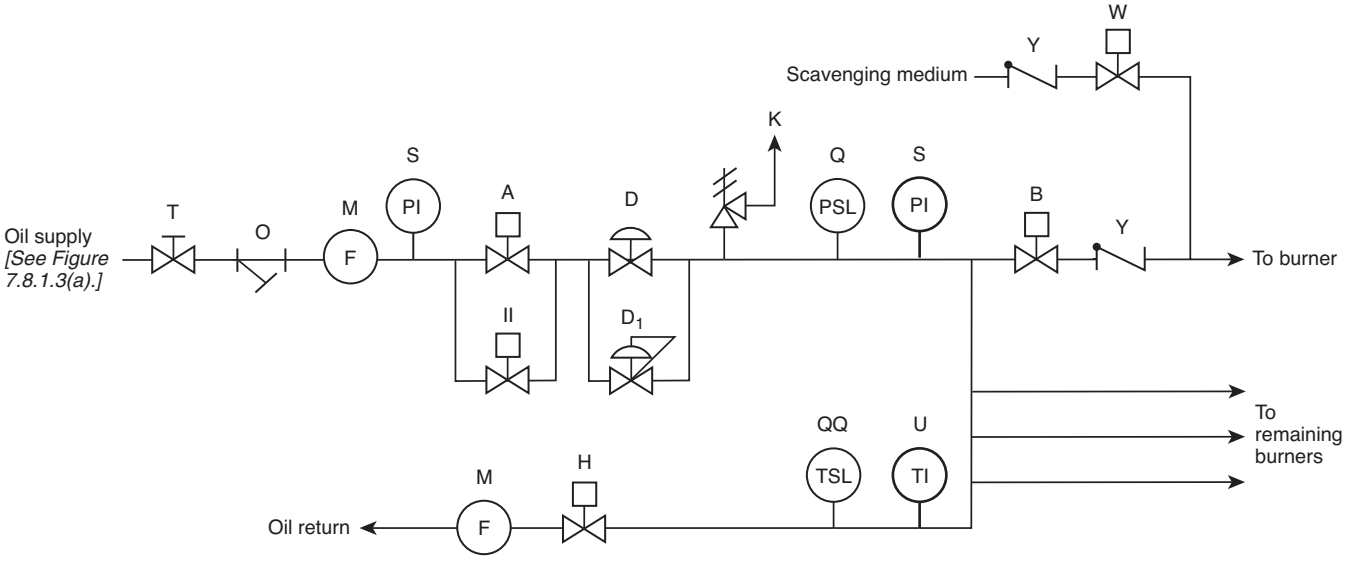

FIGURE 7.8.1.3(e) Oil Burner/Lance System — Mechanically Atomized Master Fuel Control Valve for Multiple Burners (Automatic).

7.8.3.6.3 Particular attention shall be given to the integrity of flexible hoses or swivel joints.

7.8.3.6.4 The requirements of housekeeping described in Chapter 4 shall be practiced.

7.8.3.7 All burner safety shutoff valves shall be located close to the burner to minimize the volume of oil left downstream of the burner valves in the burner lines or that flows by gravity into the furnace on an emergency trip or burner shutdown.

7.8.3.8 Atomizing Subsystem.

7.8.3.8.1 Where the fuel is to be atomized with the assistance of another medium, the atomizing medium shall be free of contaminants that could cause an interruption of service.

7.8.3.8.2 For steam atomizing, insulation and traps shall be included to ensure dry atomizing steam to the burners.

7.8.3.8.3 The atomizing medium shall be provided and maintained at the specified pressure necessary for operation.

Copyright 2014 National Fire Protection Association (NFPA). Licensed, by agreement, for individual use and download on October 4, 2014 to LEADER and READER for designated user PATTARAPORN SRITRAKOOL. No other reproduction or transmission in any form permitted without written permission of NFPA. For inquires or to report unauthorized use, contact licensing@nfpa.org.

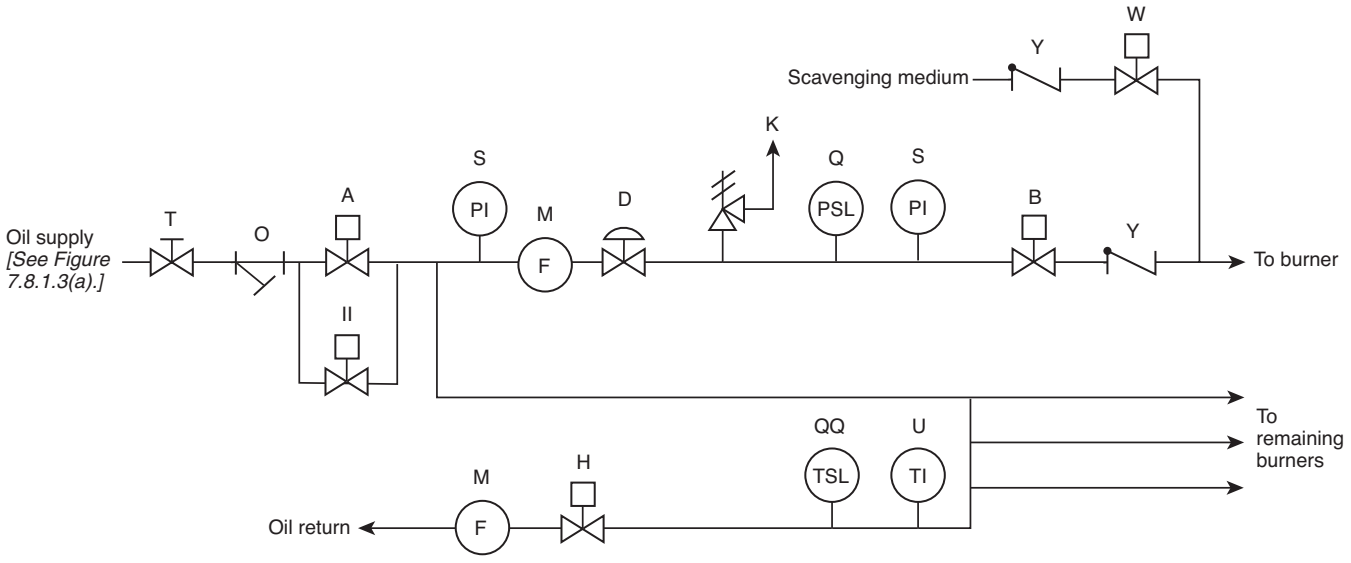

FIGURE 7.8.1.3(f) Oil Burner/Lance System — Mechanically Atomized Individual Fuel Control Valve for Multiple Burners (Automatic).

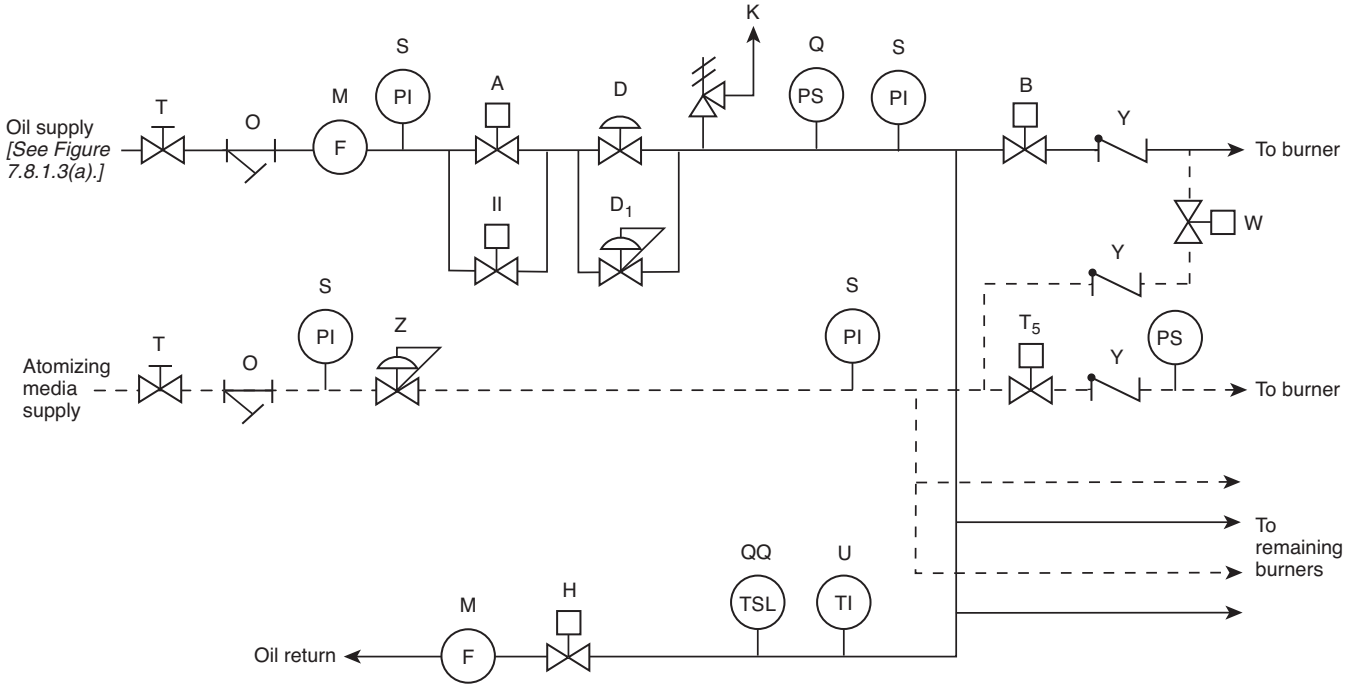

FIGURE 7.8.1.3(g) Oil Burner/Lance System — Air/Steam Atomized Master Fuel Control Valve for Multiple Burners (Automatic).

7.8.3.8.4 Contamination.

7.8.3.8.4.1 Positive means shall be provided to prevent fuel oil from entering the atomizing medium system during or after operation.

7.8.3.8.4.2 Positive means shall not rely on check valves for this function because they have not proven dependable in heavy oil service.

7.8.3.8.5 The atomizing subsystem shall be designed for convenient cleaning and maintenance.

7.8.4 Flame Monitoring and Tripping System.

7.8.4.1 Each burner shall be supervised individually, and, on detection of loss of burner flame, the safety shutoff valve for the burner experiencing the loss shall automatically close.

Copyright 2014 National Fire Protection Association (NFPA). Licensed, by agreement, for individual use and download on October 4, 2014 to LEADER and READER for designated user PATTARAPORN SRITRAKOOL. No other reproduction or transmission in any form permitted without written permission of NFPA. For inquires or to report unauthorized use, contact licensing@nfpa.org.

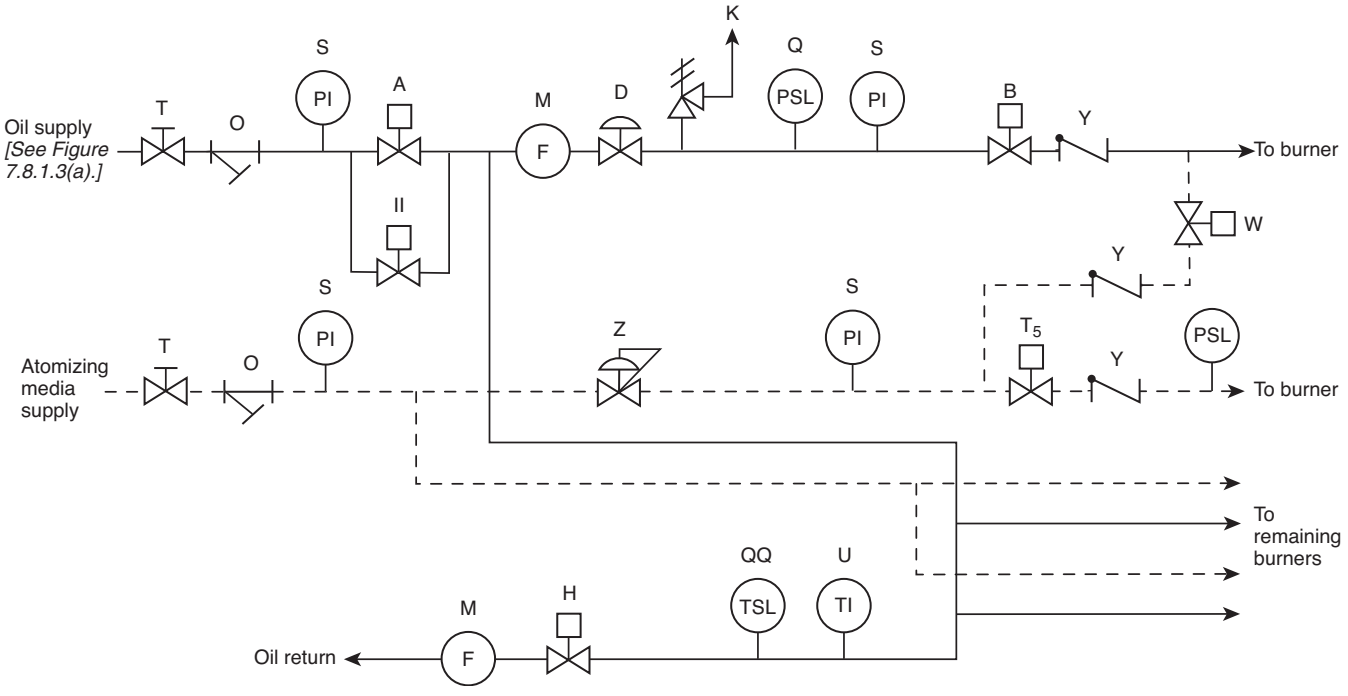

FIGURE 7.8.1.3(h) Oil Burner/Lance System — Steam/Air Atomized Individual Fuel Control Valve (Automatic).

7.8.4.2 On detection of loss of all warm-up burner flame or partial loss of flame to the extent that hazardous conditions exist, a trip of the warm-up burner system shall be automatically initiated.

7.8.5 Sequence of Operations.

7.8.5.1 General.

7.8.5.1.1 The sequence of operations in 7.8.5 shall be followed whether the burner is operated manually or certain functions are accomplished by interlocks or automatic controls. *[See Figure 7.8.1.3(a) through Figure 7.8.1.3(h).]*

7.8.5.1.2 Burner Operation.

7.8.5.1.2.1 Burners shall be placed in service in a sequence specified by operating instructions and verified by actual experience.

7.8.5.1.2.2 Burners shall be placed in service as necessary, with fuel flows and individual registers or dampers positioned for light-off in accordance with established operating procedures.

7.8.5.1.2.3 The fuel pressure at the burner header for all burners served by a single control valve shall be permitted to be used as a guide in maintaining the necessary fuel flow for each burner and shall be maintained automatically within prescribed limits as additional burners are placed in service.

7.8.5.1.2.4 The total number of burners placed in service shall be the number necessary to accomplish both of the following within the rate of rise limits specified by the boiler manufacturer:

(1) Raise boiler pressure and temperature
(2) Raise bed temperature

7.8.5.1.3 Burner Testing.

7.8.5.1.3.1 Each burner shall be tested during initial start-up to determine whether any modifications to the procedures specified in 7.8.5.2 are needed to establish ignition or to satisfy other design limitations during light-off and warm-up.

7.8.5.1.3.2 For burners that are purged with the registers in the normal operating position, it shall be permissible to momentarily close the registers of the burner being lighted, if required to establish ignition.

7.8.5.1.3.3 Modifications to the basic procedures shall be allowed only if required to obtain light-off.

7.8.5.1.3.4 Paragraphs 7.6.1.5.1.1 through 7.6.1.5.1.6 shall be followed, thereby satisfying the basic objectives in 7.6.1.5.

7.8.5.2 Functional Requirements.

7.8.5.2.1 Cold Start.

7.8.5.2.1.1 Preparation for start-up shall include a thorough inspection and shall verify the following:

(1) Energy is supplied to the control system and to the interlock systems.
(2) All safety shutoff valves are closed; all sparks are deenergized.
(3) Gas ignition systems meet the requirements of Section 7.7.
(4) Circulating valves are open to provide and maintain hot oil in the burner headers.
(5) The proper drum water level is established in drum-type boilers, circulating flow is established in forced circulation boilers, or minimum water flow is established in once-through boilers.

Copyright 2014 National Fire Protection Association (NFPA). Licensed, by agreement, for individual use and download on October 4, 2014 to LEADER and READER for designated user PATTARAPORN SRITRAKOOL. No other reproduction or transmission in any form permitted without written permission of NFPA. For inquires or to report unauthorized use, contact licensing@nfpa.org.

(6) Burner guns have been checked to ensure that the correct burner tips and sprayer plates and gaskets are in place to ensure a safe operating condition.
(7) Burner elements and igniters are positioned in accordance with the manufacturer's specifications.
(8) Meters or gauges indicate fuel header pressure to the unit.

7.8.5.2.1.2 Starting Sequence. The starting sequence shall be performed in the order of 7.8.5.2.1.2(A) through 7.8.5.2.1.2(P).

(A) The following leak test shall be performed on all oil headers before the oil system is placed in service by establishing a predetermined pressure on the oil header:

(1) The predetermined pressure is established with the main and individual burner safety shutoff valves and the recirculating valves closed.
(2) If this oil pressure remains within predetermined limits for a predetermined amount of time, the individual burner safety shutoff valves are properly sealing off their burners.

(B) The oil temperature or viscosity shall be verified to be within predetermined limits to ensure that atomization will occur. The circulating valve and throttle recirculating valve, if necessary, shall be closed to allow establishment of burner header pressure within manufacturer's limits, as specified in 7.8.5.2.1.2(A).

(C) All fuel valve(s) shall be closed and the safety shutoff valve(s) shall be opened, but only after the requirements of 7.9.3.3 for permissible conditions in the furnace purge system have been satisfied.

(D) It shall be determined that the burner fuel control valve is in the light-off position and that the burner fuel bypass control valve, if provided, is set to maintain burner header fuel pressure within predetermined limits for light-off.

(E) The igniter header safety shutoff valve(s) shall be opened, and it shall be confirmed that the igniter fuel control valve is holding the manufacturer's recommended fuel pressure necessary for the igniter to operate at design capacity.

(F) The air register or damper on the burner selected for light-off shall be adjusted to the position recommended by the manufacturer or the established operating procedure in accordance with the requirements of this section.

(G) The spark or other source of ignition for the igniter(s) on the burner(s) to be lit shall be initiated and the following procedures completed:

(1) The individual igniter safety shutoff valve(s) and all igniter system atmospheric vent valves (gas igniters only) shall be closed.
(2) If flame on the first igniter(s) is not established within 10 seconds, the individual igniter safety shutoff valve(s) shall be closed, and the cause of failure to ignite shall be determined and corrected.
(3) With airflow maintained at purge rate, repurge shall not be required, but at least 1 minute shall elapse before a retrial of any igniter is attempted.
(4) Repeated retrials of igniters without investigating and correcting the cause of the malfunction shall be prohibited.

(H) Where Class 3 Special electric igniters are used, the procedures described in 7.8.5.2.1.2(A) through 7.8.5.2.1.2(D), 7.8.5.2.1.2(F), and 7.8.5.2.1.2(I) through 7.8.5.2.1.2(L) shall be used, recognizing the requirements for individual burner flame supervision.

(I) After it is certain that the igniter(s) is established and is providing the required level of ignition energy for the warm-up burner(s), the individual burner safety shutoff valve(s) shall be opened and the following procedures performed:

(1) A master fuel trip shall be initiated when the bed temperature falls below the main fuel ignition temperature as specified in 7.6.1.5.1.6 and when the flame detection system(s) indicates that ignition has not been obtained within 5 seconds following the actual entry of fuel into the burner.
(2) Purging shall be repeated, and the condition(s) that caused the failure to ignite shall be corrected before another light-off attempt is made.
(3) For the following burner and all subsequent burners placed in operation, failure to ignite or loss of ignition for any reason on any burner(s) shall cause the fuel flow to that burner(s) to stop.
(4) All conditions required by the manufacturer and established operating procedures for light-off shall exist before restarting a burner.

(J) After stable flame is established, the air register(s) or damper(s) shall be adjusted slowly to its operating position, making certain that ignition is not lost in the process. With automatic burner management systems, the air register shall be permitted to be opened simultaneously with the burner safety shutoff valve.

(K) Class 3 igniters shall be shut off at the end of the time trial for proving the main flame, and the following shall be ensured:

(1) It shall be verified that the stable flame continues on the burner(s) after the igniters are shut off.
(2) Systems that allow the igniters to remain in service on either an intermittent or a continuous basis shall have been tested to meet all the requirements of Class 1 igniters or Class 2 igniters with associated interlocks in service.

(L) The following procedures shall apply:

(1) The procedures of 7.8.5.2.1.2(F) through 7.8.5.2.1.2(K) shall be followed when additional burners are being placed in service, as necessary, to increase bed temperature or steam pressure or to carry additional load.
(2) Automatic control of burner fuel flow and burner airflow during the lighting and start-up sequence is recommended and if used shall be in accordance with the requirements of 7.8.5.2.1.2(N).
(3) The fuel flow to each burner (as measured by equivalent means) shall be maintained at a controlled value that is compatible with the established airflow through the corresponding burner.
(4) Total furnace airflow shall not be reduced below purge rate airflow and shall be at least that which is necessary for complete combustion in the furnace.

(M) After a predetermined number of burners have been placed in service to allow control of the header fuel flow and temperature, the recirculating valve shall be closed, unless the system is designed for continuous recirculation.

(N) The burner combustion control (unless designed specifically for start-up procedures) shall not be placed in service

Copyright 2014 National Fire Protection Association (NFPA). Licensed, by agreement, for individual use and download on October 4, 2014 to LEADER and READER for designated user PATTARAPORN SRITRAKOOL. No other reproduction or transmission in any form permitted without written permission of NFPA. For inquires or to report unauthorized use, contact licensing@nfpa.org.

until a predetermined minimum warm-up burner fuel input has been attained, the burner fuel and airflow are adjusted as necessary, and a stable flame has been established.

(O) It shall be permitted to place a multiple number of igniters in service simultaneously from a single igniter safety shutoff valve, provided the igniters are supervised so that failure of one of the group to light causes the fuel to all igniters of the group to be shut off.

(P) It shall be permitted to place in service simultaneously a multiple number of burners served by their corresponding multiple igniters from a single burner safety shutoff valve, provided the burners are supervised so that failure of one of the group to light causes the fuel to all burners of the group to be shut off.

7.8.5.2.2 Normal Operation.

7.8.5.2.2.1 Except for duct burners, the firing rate shall be regulated by increasing or decreasing the fuel and air supply to maintain the air-fuel ratio within predetermined operating limits continuously at all firing rates. Changes in air flow during load changes shall lead or lag changes in fuel flow as required to ensure sufficient air for complete combustion throughout the load change.

(A) For the case where either the air or fuel supply to a group of burners is regulated by a common device, changes in firing rate shall be accomplished by simultaneous adjustment of air and fuel flow to all the burners in the group.

(B) For the case where each burner in a multiple burner arrangement is equipped with independently controllable fuel and air supplies, changes in firing rate shall be accomplished by adjusting the firing rate of each individual burner independently provided the air-fuel ratio of each individual burner is maintained within predetermined operating limits continuously at all firing rates.

(C) In the case of a duct burner, the firing rate shall be regulated by increasing or decreasing the fuel flow. An interlock shall be provided to prevent airflow to the duct burner from falling below the minimum required for combustion as recommended by the manufacturer.

7.8.5.2.2.2 The firing rate shall not be regulated by varying the fuel to individual burners by means of the individual burner safety shutoff valve(s).

(A) The individual burner safety shutoff valve(s) shall be fully open or completely closed.

(B) Intermediate settings shall not be used.

7.8.5.2.2.3 Air registers shall be set at firing positions determined by tests, except in systems provided with metering of air and fuel to each burner and designed specifically for individual burner modulating control.

7.8.5.2.2.4 The burner fuel and airflow shall be maintained within a range between the maximum and minimum limits as determined by trial or, if trial results do not exist, as specified by the combustion equipment manufacturer(s).

(A) These trials shall test for minimum and maximum limits and for stable flame under both of the following conditions:

(1) With all burners in service and combustion control on automatic
(2) With different combinations of burners in service and combustion control on automatic

(B) Where there are changes to any of the minimum and maximum limits because of equipment modifications, operating practices, or fuel conditions, retesting shall be required.

7.8.5.2.2.5 Loss of Burner Flame.

(A) On loss of an individual burner flame, that individual burner's safety shutoff valve shall be automatically closed.

(B) The burner register shall be closed where it interferes with the air-fuel ratio supplied to any other individual burner flame.

7.8.5.2.2.6 Total airflow shall not be reduced below the purge rate.

7.8.5.2.3 Normal Shutdown.

7.8.5.2.3.1 Shutdown Process.

(A) As the fuel is reduced, the remaining burners shall be shut down sequentially using the reverse procedure of that used during start-up.

(B) Each oil burner shall be shut down in the following sequence:

(1) Registers shall be placed in the position prescribed by the established operating procedure(s).
(2) The igniter shall be placed into service on the particular burner to be shut down.
(3) If the oil passages of the igniter are to be cleared into the furnace, the spark or other ignition source for the igniter shall be initiated before the steam (or air) clearing valve is opened.
(4) The clearing steam (or air) shall be left in service for a predetermined length of time that has proven adequate to remove all oil so as to ensure there will be no carbonization or plugging of the burner tip.
(5) The igniter shall be removed from service, and oil guns without cooling shall be removed or retracted.
(6) When the last individual burner safety shutoff valve is closed, the oil header safety shutoff valve shall be closed.

7.8.5.2.3.2 Where fuel recirculation in the burner header is to be established, the following shall be completed:

(1) Confirmation that individual burner safety shutoff valves are closed and that flame is out on each burner shall be made.
(2) Confirmation that the main safety shutoff valve is closed shall be made.
(3) The circulating valve and recirculating valve shall be opened.

7.8.5.3 Mandatory Automatic Fuel Trip for Oil-Fired Warm-Up Burners. A warm-up burner system fuel trip of each burner or group of burners serviced by a single control valve shall result from any of the following conditions:

(1) Fuel pressure outside operating limits necessary to accomplish proper atomization as established by trial or by the burner manufacturer
(2) Fuel temperature (heated oil only) outside operating limits necessary to accomplish proper atomization as established by trial or by the burner manufacturer
(3) Atomizing medium, where used, outside operating limits established by trial or by the burner manufacturer
(4) Loss of air supply fan or inadequate airflow to the burner
(5) Loss of all flame
(6) Last individual burner safety shutoff valve closed

Copyright 2014 National Fire Protection Association (NFPA). Licensed, by agreement, for individual use and download on October 4, 2014 to LEADER and READER for designated user PATTARAPORN SRITRAKOOL. No other reproduction or transmission in any form permitted without written permission of NFPA. For inquires or to report unauthorized use, contact licensing@nfpa.org.

(7) Master fuel trip
(8) High duct burner discharge temperature

7.8.5.4 Emergency Conditions Not Requiring Shutdown or Trip.

7.8.5.4.1 If an air deficiency develops while flame is maintained at the burners, the fuel shall be reduced until the proper air-fuel ratio has been restored.

7.8.5.4.2 Where fuel flow cannot be reduced, the airflow shall be increased slowly until the proper air-fuel ratio has been restored.

7.8.5.4.3 Burners with poor atomization shall be shut down.

7.8.5.5 General Operating Requirements — All Conditions.

7.8.5.5.1 Ignition.

7.8.5.5.1.1 The igniter for the burner shall always be used.

7.8.5.5.1.2 Burners shall not be lighted one from another, from hot refractory, or from bed material.

7.8.5.5.2 Where the boiler is operating at low capacity with multiple burners controlled by one master flow control valve, the burner fuel pressure shall be maintained above minimum by reducing the number of burners serviced by that control valve as necessary.

7.8.5.5.3 Where oil passages into the furnace are being cleared, igniters shall be in service, with ignition established.

7.8.5.5.4 The following leak test shall be performed on all oil headers before the oil header is placed in service:

(1) A predetermined pressure on the oil header shall be established with the main and individual burner safety shutoff valves and the recirculating valve valves closed.
(2) If this oil pressure remains within predetermined limits for a predetermined amount of time, the individual burner safety valves shall be assumed to be leaktight.

7.9 Interlock System.

7.9.1 General.

7.9.1.1* The basic requirements of an interlock system for a unit shall be to protect personnel from injury and also to protect the equipment from damage.

7.9.1.2 The interlock system shall function to protect against improper unit operation by limiting actions to a prescribed operating sequence or by initiating trip devices when approaching an undesirable or unstable operating condition.

7.9.2 Functional Requirements.

7.9.2.1 The operation of any interlock that causes a trip shall be annunciated.

7.9.2.2 An interlock system shall be installed, adjusted, and tested to confirm design, function, and required timing.

7.9.2.3 Periodic testing and maintenance shall be performed to keep the interlock system functioning in accordance with the manufacturer's specifications.

7.9.2.4 The design of an interlock system shall be predicated on the fundamentals in 7.9.2.4.1 through 7.9.2.4.10.

7.9.2.4.1 The starting procedure and operation shall be supervised to ensure proper operating practices and sequences.

7.9.2.4.2 The minimum amount of equipment shall be tripped in the required sequence where the safety of personnel or equipment is jeopardized.

7.9.2.4.3 The cause of the trip shall be indicated and shall prevent restarting of any portion of the affected equipment until nonhazardous conditions are established.

7.9.2.4.4 The required fuel safety subsystems related to duct burner, lance, warm-up burner, solid fuel and master fuel trip, and their related trip devices shall be functionally coordinated into an overall unit interlock system.

7.9.2.4.5 Where automatic equipment is not available to accomplish the intended function, instrumentation shall be provided to enable the operator to complete the required operating sequence.

7.9.2.4.6 The design shall provide as much flexibility with respect to alternate modes of operation as is consistent with good operating practice.

7.9.2.4.7 Preventive maintenance shall be provided in accordance with the manufacturer's recommendations.

7.9.2.4.8 The design shall not require any deliberate defeating of an interlock to start or operate equipment. Whenever a safety interlock device is removed temporarily from service, it shall be noted in the log and annunciated if practicable, and a manual or other means shall be substituted to supervise this interlock function.

7.9.2.4.9* Except as permitted in 7.9.2.4.9.1 and 7.9.2.4.9.2, the mandatory automatic master fuel trip and mandatory automatic main fuel trip systems, including sensing elements and circuits, shall be functionally independent from all other control system functions. The warm-up burner fuel trip system, sensing elements, and circuits shall be functionally independent from all other control system functions.

7.9.2.4.9.1 Individual burner flame failure devices shall be permitted to be used for initiating master fuel trip systems.

7.9.2.4.9.2 Airflow measurement, drum level measurement, and auctioneered furnace draft signals from the boiler control system shall be permitted to be used for a master fuel trip, provided all the following conditions are met:

(1) These interlocks are hardwired into the burner management system.
(2) Tripping set points are protected from unauthorized changes.
(3) Any single component failure of these sensing elements and circuits does not prevent a mandatory master fuel trip.

7.9.2.4.10 The misoperation of the interlock system or related equipment due to interruption and restoration of the interlock power supply shall be prevented.

7.9.2.5 Adjustment of Initiating Devices.

7.9.2.5.1 The actuation values and time of action of the initiating devices shall be adjusted to the furnace and equipment on which they are installed.

7.9.2.5.2 After adjustment, each path and the complete system shall be tested to demonstrate the adequacy of adjustment for that furnace.

7.9.3 System Requirements.

7.9.3.1 General.

7.9.3.1.1 Interlocks shall be required as shown in Figure 7.9.3.1.1(a) through Figure 7.9.3.1.1(f) to provide the basic furnace protection for fluidized bed boilers.

Copyright 2014 National Fire Protection Association (NFPA). Licensed, by agreement, for individual use and download on October 4, 2014 to LEADER and READER for designated user PATTARAPORN SRITRAKOOL. No other reproduction or transmission in any form permitted without written permission of NFPA. For inquires or to report unauthorized use, contact licensing@nfpa.org.

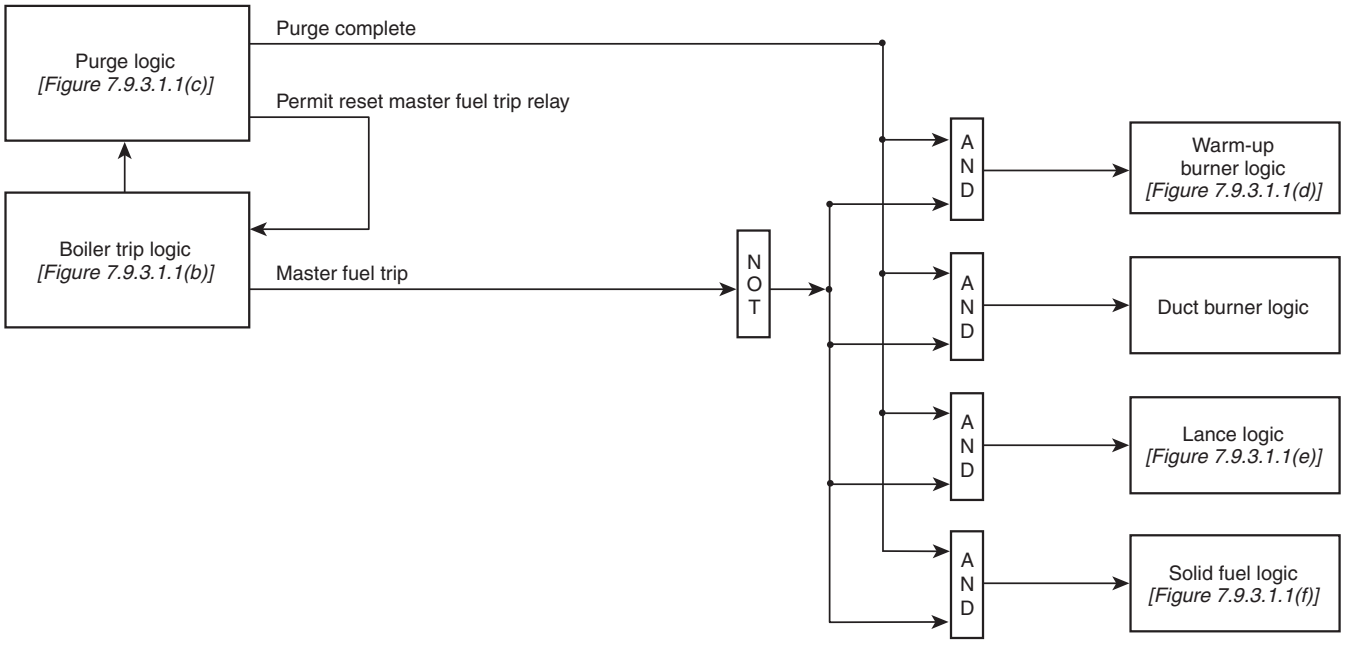

FIGURE 7.9.3.1.1(a) Interlock System Overview.

7.9.3.1.2 The use of the logic flow paths shown in Figure 7.9.3.1.1(a) through Figure 7.9.3.1.1(f) shall reflect the sequence of operations described in Sections 7.6, 7.7, and 7.8 for either a cold start or a hot restart.

7.9.3.2 Master Fuel Trip Logic. The master fuel trip logic that initiates the tripping of all fuel supplies through a master fuel trip device shall be as shown in Figure 7.9.3.1.1(b) and shall be in accordance with Section 7.6.

7.9.3.2.1 The master fuel trip device shall remain tripped until reset by either the successful completion of the purge cycle or the main fuel temperature permissive from the fuel release logic, as shown in Figure 7.9.3.1.1(c).

7.9.3.2.2 Each source of operation of the master fuel trip devices shall actuate a "cause of trip" indication that informs the operator of the initiating cause of trip impulse.

7.9.3.2.2.1 The loss of all ID fans or all FD fans shall operate the master fuel trip device, as shown in blocks 1 through 4 of Figure 7.9.3.1.1(b).

7.9.3.2.2.2 The loss of an individual ID fan or FD fan shall cause an immediate runback in unit fuel input in order to maintain the air-fuel ratio within the required limits. This shall be permitted to be interlocked or made a part of the combustion control system.

7.9.3.2.2.3 The signal indicating furnace pressure high [block 6 in Figure 7.9.3.1.1(b)] shall be interlocked with the master fuel trip device to protect against abnormal furnace conditions, such as those resulting from a tube rupture or damper failure.

7.9.3.2.2.4 A manual trip switch [block 12 in Figure 7.9.3.1.1(b)] shall be provided for operator use in an emergency and shall actuate the master fuel trip relay directly.

7.9.3.2.2.5* The signal indicating low bed temperature [block 10 in Figure 7.9.3.1.1(b)], as defined in 7.6.1.5.1.6, and the signal indicating that the warm-up burner flame is not proven (block 11) shall be interlocked with the master fuel trip device to prevent the further admission of fuel into the furnace under "no-flame" conditions.

7.9.3.2.2.6 All Fuel Inputs Zero [block 9 in Figure 7.9.3.1.1(b)].

(A) A mandatory master fuel trip shall occur once any fuel has been admitted to the unit, all fuel sources are subsequently isolated, and bed temperature is less than the main fuel operating permissive (block 13) as defined in 7.6.2.2.5.

(B) This trip shall be permitted to be reset and bypassed once the bed temperature exceeds the temperature permissive level for admitting fuel.

7.9.3.2.2.7 Other trips as required by 7.6.2.5.2 and additional automatic master fuel trips required for a particular boiler design shall actuate the master fuel trip relay.

7.9.3.2.2.8 In all cases following a master fuel trip, operator initiation of fuel input to the unit shall be required.

7.9.3.2.2.9 Type.

(A) The master fuel trip device shall be of the type that remains tripped until the boiler purge system permits it to reset.

(B) When actuated, the master fuel trip device shall trip all sources of solid fuel input directly, close all safety shutoff valves, de-energize all igniter sparks, and de-energize all other ignition sources within the unit and the flue gas path.

7.9.3.3 Unit Purge. A required purge of the unit shall be ensured by successful completion of a series of successive purge-permissive interlocks, which are functionally outlined in Figure 7.9.3.1.1(c).

7.9.3.3.1 This series of interlocks shall ensure that the unit purge has been completed with all sources of fuel admission proven isolated, all required air sources proven in service, all air paths in purge position, and no boiler trip conditions in existence prior to or during the purge cycle.

Copyright 2014 National Fire Protection Association (NFPA). Licensed, by agreement, for individual use and download on October 4, 2014 to LEADER and READER for designated user PATTARAPORN SRITRAKOOL. No other reproduction or transmission in any form permitted without written permission of NFPA. For inquires or to report unauthorized use, contact licensing@nfpa.org.

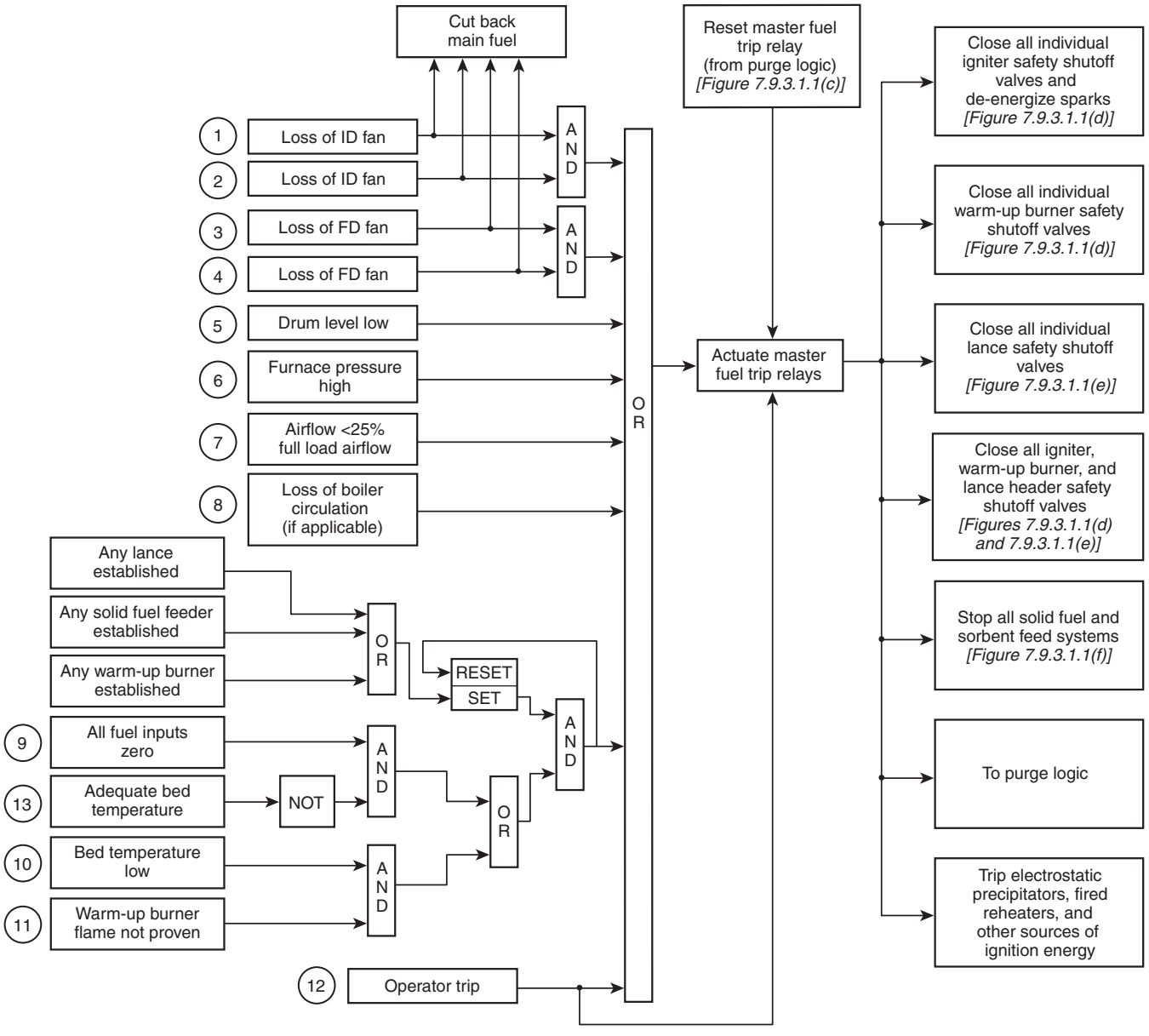

Notes:
1. Mandatory automatic trips per 7.6.2.5.2 shown.
2. Two induced draft and forced draft fans are assumed.

FIGURE 7.9.3.1.1(b) Boiler Trip Logic.

7.9.3.3.2 Fuel gas system vent valves shall be proven not closed.

7.9.3.3.3 Where the igniter capacity is 1.5 MW_t (5 million Btu/hr) or less, proof of closure of individual igniter safety shutoff valves by means other than valve position shall be permitted.

7.9.3.3.3.1 Interruption of the furnace purge either by the master fuel trip interlock logic or through the loss of any required purge interlocks shall cause the purge sequence to reset, and a complete and successful repurge of the unit shall be required prior to admitting fuel.

7.9.3.3.3.2 Cold Start. During initial start-up *(see 7.6.2.1)*, or if the bed temperature is less than either the main fuel or the auxiliary fuel permissives *(see 7.6.2.1)*, a complete purge of the unit as outlined in Figure 7.9.3.1.1(c) shall be required.

7.9.3.3.3.3* Hot Restart.

(A) If operating conditions at the time of reset are such that the bed temperature permissives for the main fuel are satisfied *(see 7.6.2.4)*, a purge bypass shall be permitted.

(B) Fuel oil or gas header leak tests shall not be required under this condition.

Copyright 2014 National Fire Protection Association (NFPA). Licensed, by agreement, for individual use and download on October 4, 2014 to LEADER and READER for designated user PATTARAPORN SRITRAKOOL. No other reproduction or transmission in any form permitted without written permission of NFPA. For inquires or to report unauthorized use, contact licensing@nfpa.org.

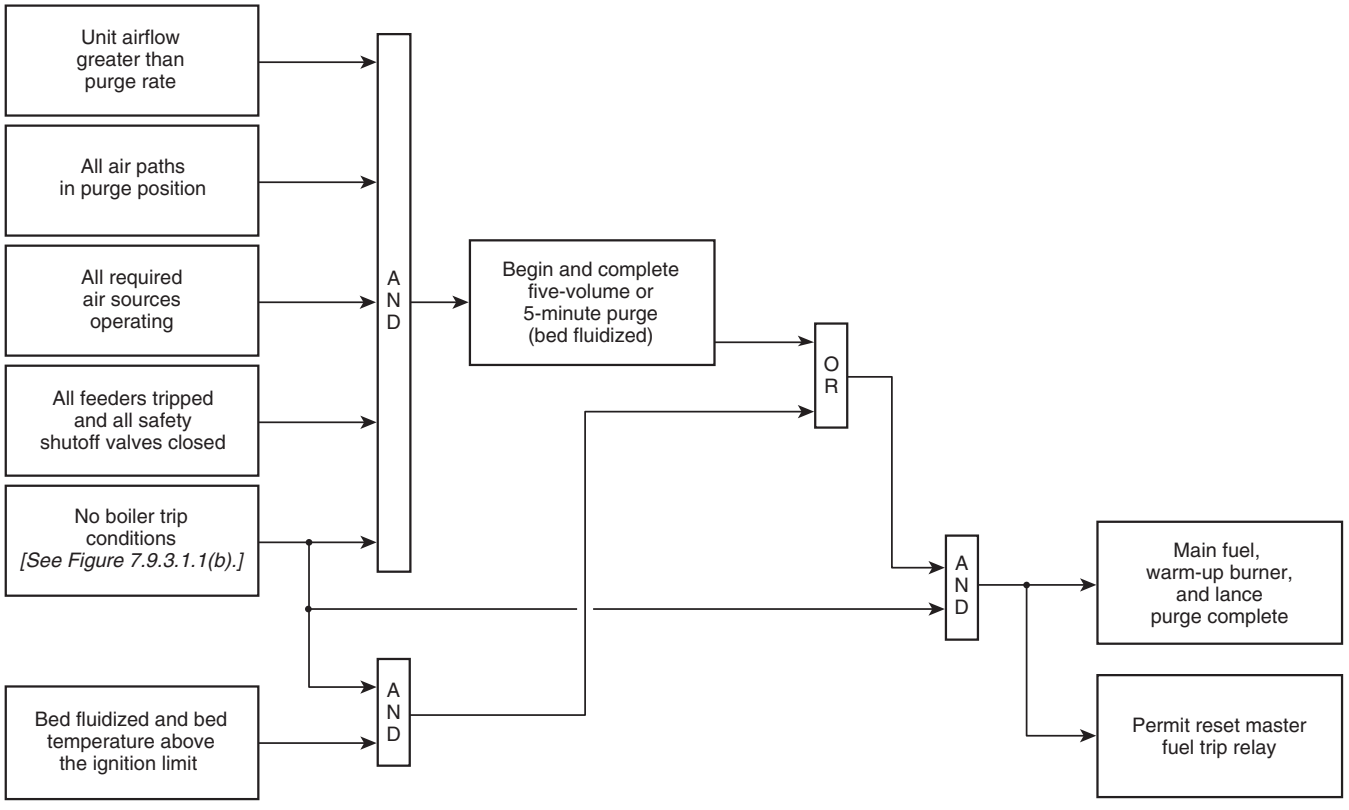

FIGURE 7.9.3.1.1(c) Purge Logic.

7.9.3.3.3.4 On successful completion of the purge or following completion of the purge bypass and reset, the master fuel trip device shall be reset.

7.9.3.4* Warm-Up Burners. The warm-up burners shall not be placed in service until the master fuel trip relay has been reset. *[See Figure 7.9.3.1.1(d).]*

7.9.3.4.1 Loss of an individual warm-up burner flame shall initiate the tripping of the individual burner safety shutoff valve(s) and its individual igniter safety shutoff valve(s) and shall de-energize associated sparks.

7.9.3.4.2* Incorrect warm-up burner fuel pressure shall be interlocked to initiate the tripping of the individual warm-up burner safety shutoff valve(s) and to de-energize the associated sparks.

7.9.3.4.2.1 Where gas is used for fuel, both high and low pressure shall be interlocked.

7.9.3.4.2.2 Where oil is used, low pressure shall be interlocked.

7.9.3.4.2.3 Burner fuel pressure shall be monitored to ensure each warm-up burner is being operated within its capacity and stability limits as designated by the burner manufacturer and demonstrated by test.

7.9.3.4.3 For gas-fired warm-up burners, improper gas supply (metering) pressure shall initiate tripping of the burner header and individual warm-up burner safety shutoff valves and igniter header and individual igniter safety shutoff valves and shall de-energize associated sparks.

7.9.3.4.4 Where oil is used as an igniter fuel with air or steam for atomization, loss of atomizing media shall trip the igniter header and individual igniter safety shutoff valves and shall de-energize the associated sparks. The associated warm-up burners also shall be tripped if they are in service and no other proof of flame exists.

7.9.3.4.5 Where oil is used as a warm-up burner fuel with air or steam for atomization, loss of atomizing media shall trip the burner header and individual warm-up burner safety shutoff valves and igniter header and individual igniter safety shutoff valves and shall de-energize associated sparks.

7.9.3.4.6 A master fuel trip shall trip all warm-up burner header and all individual warm-up burner safety shutoff valves and all igniter header and all individual igniter safety shutoff valves and shall de-energize all associated sparks.

7.9.3.4.7 The master fuel trip relay shall trip all warm-up burner header and all individual warm-up burner safety shutoff valves directly and all igniter header and all individual igniter safety shutoff valves and shall de-energize all associated sparks.

7.9.3.4.8 If individually flow-controlled burners are used and the fuel flow or airflow falls below the manufacturer's recommended minimum flow, the burner shall be tripped immediately.

7.9.3.5 Lances.

7.9.3.5.1 Lances shall not be placed in service until the master fuel trip relay has been reset and the bed temperature has reached the ignition temperature for the fuel being fired in the lance. *[See 7.6.1.5.1.6, 7.6.2.1.2.9(6), 7.7.5.2.1.2(J)(4), and Figure 7.9.3.1.1(e).]*

Copyright 2014 National Fire Protection Association (NFPA). Licensed, by agreement, for individual use and download on October 4, 2014 to LEADER and READER for designated user PATTARAPORN SRITRAKOOL. No other reproduction or transmission in any form permitted without written permission of NFPA. For inquires or to report unauthorized use, contact licensing@nfpa.org.

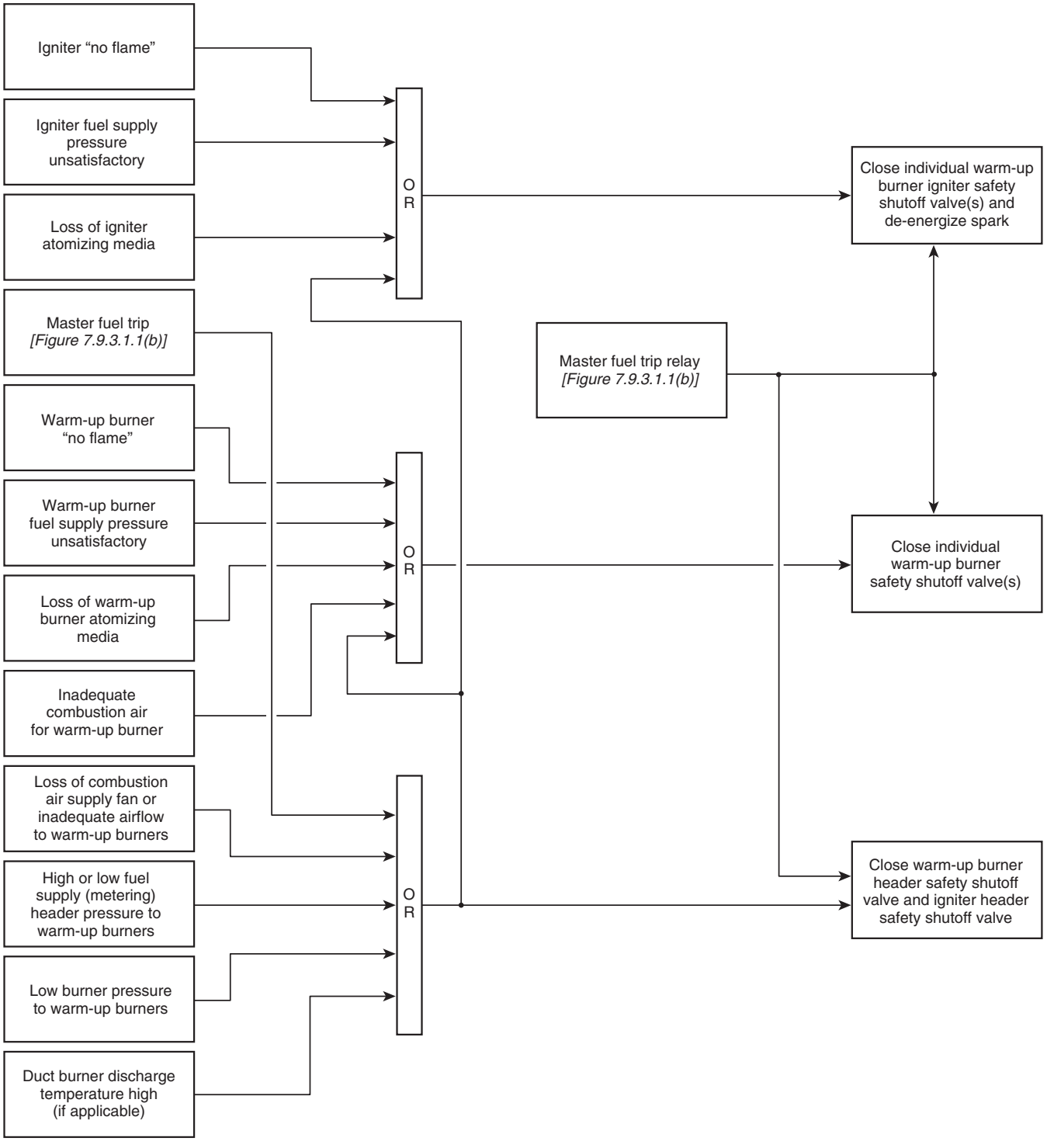

Note: Specific fuel systems might not require all the trips shown.

FIGURE 7.9.3.1.1(d) Warm-up Burner Safety Subsystem.

Copyright 2014 National Fire Protection Association (NFPA). Licensed, by agreement, for individual use and download on October 4, 2014 to LEADER and READER for designated user PATTARAPORN SRITRAKOOL. No other reproduction or transmission in any form permitted without written permission of NFPA. For inquires or to report unauthorized use, contact licensing@nfpa.org.

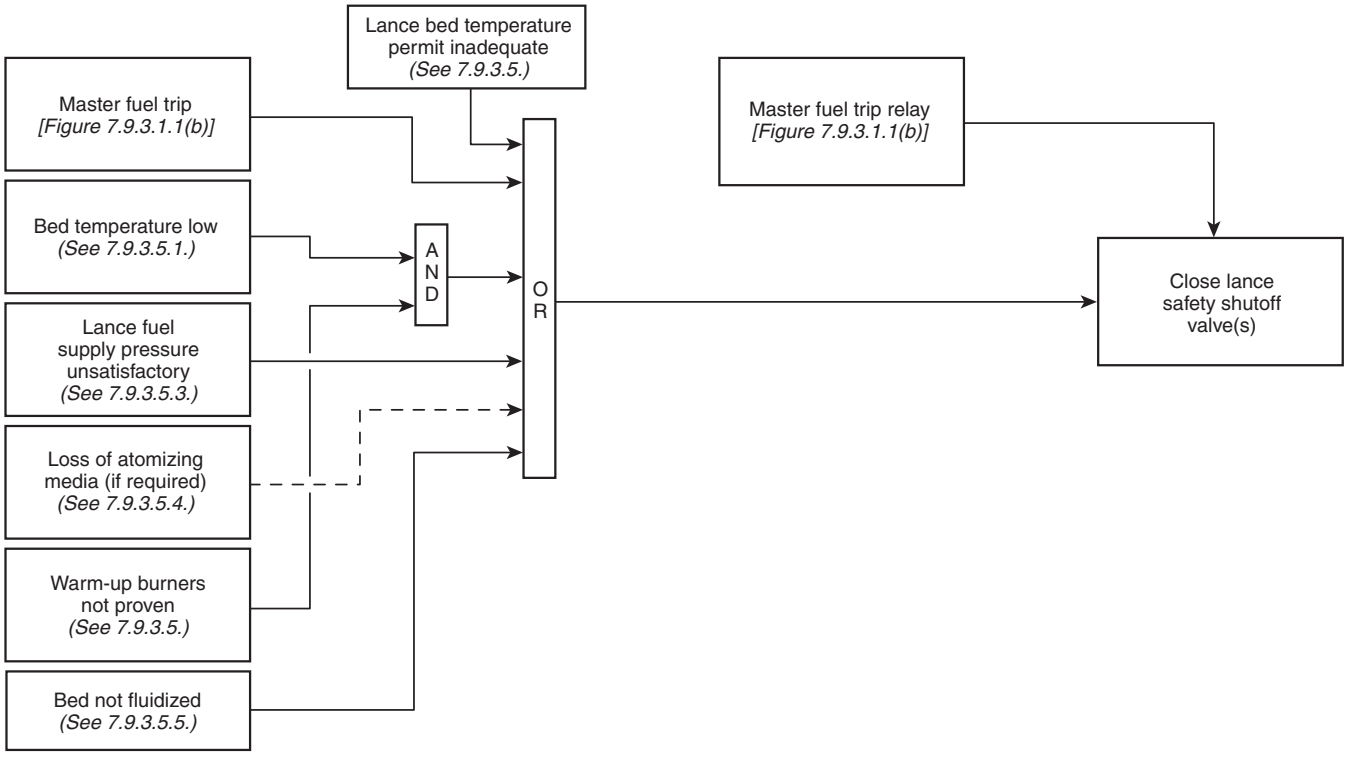

FIGURE 7.9.3.1.1(e) Lance Safety Subsystem.

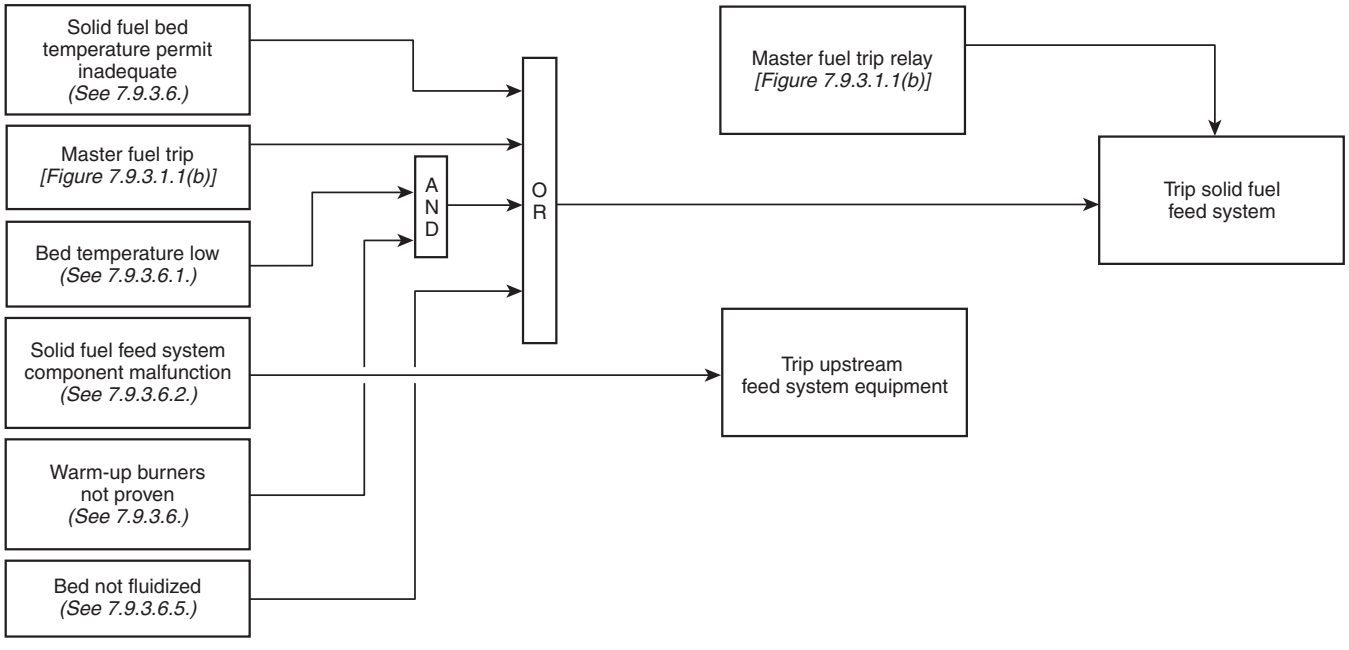

FIGURE 7.9.3.1.1(f) Solid Fuel Safety Subsystem.

Copyright 2014 National Fire Protection Association (NFPA). Licensed, by agreement, for individual use and download on October 4, 2014 to LEADER and READER for designated user PATTARAPORN SRITRAKOOL. No other reproduction or transmission in any form permitted without written permission of NFPA. For inquires or to report unauthorized use, contact licensing@nfpa.org.

7.9.3.5.2 Loss of the bed temperature permissive shall cause the individual lance safety shutoff valves to close. *(See 7.6.2.2.5.)*

7.9.3.5.3 For gas-fired lances, low or high gas supply (metering) pressure shall initiate tripping of the lance header and individual lance safety shutoff valves.

7.9.3.5.4 Lance Fuel Pressure.

7.9.3.5.4.1 Lance fuel pressure shall be interlocked to ensure that each lance is being operated within its capacity as designated by the lance manufacturer and shall initiate a trip of the individual lance safety shutoff valves.

7.9.3.5.4.2 Lance fuel pressure shall be monitored to ensure that each lance is being operated within its capacity as designated by the lance manufacturer.

7.9.3.5.4.3 The monitoring of header pressure to multiple lances with individual flow control capability shall not be construed to satisfy the requirements in 7.9.3.5.4.1 and 7.9.3.5.4.2.

7.9.3.5.5 Where oil is used as a lance fuel with air or steam for atomization, loss of atomizing media shall trip the header and safety shutoff valve(s).

7.9.3.5.6 Loss of airflow to fluidize the bed shall result in a trip of the lance header and individual lance safety shutoff valves.

7.9.3.5.7 A master fuel trip shall trip all lance header and individual lance safety shutoff valves.

7.9.3.5.8 The master fuel trip relay shall trip all lance header and individual lance safety shutoff valves directly.

7.9.3.6 Solid Fuel. The solid fuel feed system shall not be placed in service until the master fuel trip relay has been reset and the bed temperature has reached the ignition temperature of the solid fuel being fired. *[See 7.6.1.5.1.6, 7.6.2.1.2.9(6), 7.6.2.1.2.10(4), and Figure 7.9.3.1.1(f).]*

7.9.3.6.1 Loss of the required bed temperature permissive shall cause all solid fuel feed systems to trip. *(See 7.6.2.2.5.)*

7.9.3.6.2 Solid fuel feed system operation shall be interlocked to trip upstream solid fuel feed train components following a solid fuel system component malfunction.

7.9.3.6.3 A master fuel trip shall trip the solid fuel feed system.

7.9.3.6.4 The master fuel trip relay shall trip the solid fuel feed system directly.

7.9.3.6.5 Loss of airflow needed to fluidize the bed shall result in a solid fuel trip.

7.10 Alarm System.

7.10.1* Functional Requirements.

7.10.1.1 The function of the alarm system shall be to bring specific abnormal conditions, such as equipment malfunction, hazardous conditions, and misoperation, to the attention of the operator. For the purpose of this code, the primary function of alarms shall be to indicate abnormal conditions that could lead to impending or immediate hazards.

7.10.1.2 Alarm systems shall be designed so that, for all required alarms, the operator receives an audible as well as a visual indication of the condition.

7.10.1.2.1 The visual indication shall identify the source or the cause of the alarm.

7.10.1.2.2 Means shall be permitted to silence the audible alarm after actuation, but the visual indication shall continue until the condition has been resolved.

7.10.1.3 The design shall make it difficult to manually defeat the alarm. Where equipment malfunction makes alarm defeat necessary, it shall be performed by authorized personnel, and the alarm shall be tagged as inoperative.

7.10.1.4 The design shall eliminate all nuisance alarms to the extent possible.

7.10.2 Required Alarms. In addition to the alarms required by 7.10.2, the alarms of 7.6.2.5 and 7.9.2.1 shall be provided.

7.10.2.1* General.

7.10.2.1.1 High or Low Furnace Pressure. An alarm shall warn the operator of furnace pressure outside the predetermined range of normal operation and approaching a trip condition.

7.10.2.1.2 Loss of Operating Forced Draft (FD) Fan. This condition shall be sensed and alarmed only when the fan is not operating at the times expected.

7.10.2.1.3 Loss of Operating Induced Draft (ID) Fan. This condition shall be sensed and alarmed only when the fan is not operating at the times expected.

7.10.2.1.4 Boiler Airflow (Low). This condition shall be sensed and alarmed when total airflow nears the predetermined minimum purge rate.

7.10.2.1.5 Loss of Interlock Power. This condition shall be sensed and alarmed and shall include all sources of power necessary to complete interlock functions. If multiple sources of power, including compressed air, are required for an interlock system, then loss of each power source shall be annunciated separately.

7.10.2.1.6 Loss of Control Power. This condition shall be sensed and alarmed to include all sources of power, including compressed air, for the combustion control or the fluidized bed boiler interlocks detailed in 7.9.3.

7.10.2.1.7 Bed Temperature Out of Limits. The bed temperature shall be monitored and alarmed when it is out of the predetermined operating range and when it is approaching a trip condition.

7.10.2.1.8 High Ash Cooler Discharge Material Temperature. An alarm shall indicate when the material temperature about to be discharged from the ash cooler reaches a predetermined high limit.

7.10.2.1.9 Low Oxygen. An alarm shall warn the operator when the oxygen level in the flue gas is below a predetermined value.

7.10.2.1.10 Initiation of Fan Directional Blocking or Runback Action. An alarm shall indicate when fan override action or directional blocking is used to adjust the draft-regulating control element in response to a large furnace draft error for furnace pressure excursion prevention.

7.10.2.1.11 Redundant Transmitter Deviations Within the Furnace Pressure Control System. An alarm shall indicate when any one of three furnace pressure measurements deviates from the others.

Copyright 2014 National Fire Protection Association (NFPA). Licensed, by agreement, for individual use and download on October 4, 2014 to LEADER and READER for designated user PATTARAPORN SRITRAKOOL. No other reproduction or transmission in any form permitted without written permission of NFPA. For inquires or to report unauthorized use, contact licensing@nfpa.org.

7.10.2.1.12 Axial Flow Fan (If Used) Nearing Stall Line. An alarm shall indicate when an axial fan operating condition approaches the fan stall line to permit adjustments to be made to prevent uncontrolled changes in air or flue gas flow.

7.10.2.1.13 Fan Override Action. An alarm shall indicate when the draft-regulating control element is adjusted automatically as the result of a large furnace draft error.

7.10.2.2* Fuel Gas.

7.10.2.2.1 Fuel Gas Supply Pressure (High and Low). The gas pressure supplied to the plant shall be monitored at a point as far upstream of the final constant fuel pressure regulator(s) as practicable.

7.10.2.2.2 Fuel Gas Burner Header Pressure (High and Low). Each burner header served by a single flow control valve shall monitor gas pressure as close to the burners as practicable.

7.10.2.2.3 Fuel Gas Meter Pressure (High and Low). The pressure at the fuel gas meter shall be monitored at the upstream tap if the fuel gas flowmeter is part of the combustion control system and is not pressure compensated.

7.10.2.2.4 Ignition Fuel Header Pressure (High and Low). Each ignition fuel header served by a single control valve shall monitor gas pressure as close to the igniters as practicable.

7.10.2.2.5 Burner Safety Shutoff or Supervisory Shutoff Valves Not Closed. The closed position of all individual burner safety shutoff valves and fuel header shutoff valves shall be monitored, and failure of any valve to close shall be alarmed. For fuel gas systems, the position of all vent valves shall also be monitored, and failure of any vent valve to leave the closed position shall be alarmed.

7.10.2.2.6 Loss of Combustion Air to Burners. For individually controlled burners, the combustion air to each burner shall be monitored and alarmed if the burner register is closed, the air supply fan is tripped, or the airflow is low.

7.10.2.2.7 Burner Discharge Temperature (High). The discharge temperature from a burner, such as a duct burner, that is designed to maintain a desired discharge temperature shall be monitored and shall be alarmed when the temperature exceeds the maximum operating temperature.

7.10.2.2.8 Loss of Flame. A partial or total loss of a flame envelope still receiving fuel shall be monitored and alarmed.

7.10.2.2.9 Lance Fuel Header Pressure (High and Low). The lance fuel header pressure shall be monitored as close to the lances as practicable in order to warn the operator of abnormal pressure in advance of conditions that lead to a trip.

7.10.2.2.10 Lance Valve Not Closed. The closed position of all individual lance safety shutoff valves and fuel header shutoff valves shall be monitored, and failure of any valve to close shall be alarmed. The position of all vent valves shall also be monitored, and failure of any vent valve to leave the closed position shall be alarmed.

7.10.2.3* Fuel Oil.

7.10.2.3.1 Main Oil Supply Pressure (Low). The oil supply pressure shall be monitored at a point as far upstream as practicable.

7.10.2.3.2 Fuel Oil Burner Header Pressure (Low). Each burner header served by a single flow control valve shall monitor oil pressure as close to the burners as practicable.

7.10.2.3.3 Main Oil Viscosity (High). Each burner header served by a single flow control valve shall monitor oil temperature to warn that the fuel oil temperature is dropping.

7.10.2.3.4 Atomizing Steam or Air Pressure (Low). For steam burners and air-assisted burners, an alarm shall be provided on each burner atomizing media header served by a single control valve to warn that the steam or air pressure is outside the prescribed operating range.

7.10.2.3.5 Igniter Atomizing Steam or Air Pressure (Low). For steam igniters and air-assisted igniters, an alarm shall be provided to warn that steam or air pressure is outside the operating range.

7.10.2.3.6 Ignition Fuel Header Pressure (High and Low). Each igniter fuel header served by a single control valve shall monitor pressure as close to the igniters as practicable. For oil-fired igniters, only low ignition fuel header pressure shall be required to be monitored.

7.10.2.3.7 Burner Safety or Supervisory Shutoff Valves Not Closed. The closed position of all individual burner safety shutoff valves and fuel header shutoff valves shall be monitored, and failure of any valve to close shall be alarmed.

7.10.2.3.8 Loss of Combustion Air to Burners. For individually controlled burners, the combustion air to each burner shall be monitored and alarmed if the burner register is closed, the air supply fan is tripped, or the airflow is low.

7.10.2.3.9 Duct Burner Discharge Temperature (High). The discharge temperature from a burner, such as a duct burner, that is designed to maintain a desired discharge temperature shall be monitored and alarmed when the temperature exceeds the maximum operating temperature in order to warn the operator in advance of the temperature that leads to a trip.

7.10.2.3.10 Loss of Flame. A partial or total loss of a flame envelope still receiving fuel shall be monitored and alarmed.

7.10.2.3.11 Lance Atomizing Steam or Air Pressure (Low). To avoid poor atomization by steam- or air-assisted lances, an alarm shall be provided to warn that steam or air pressure are outside the predetermined operating parameters.

7.10.2.3.12 Lance Fuel Header Pressure (High and Low). The lance fuel header pressure shall be monitored as close to the lances as practicable in order to warn the operator of abnormal pressure in advance of conditions that lead to a trip.

7.10.2.3.13 Lance Valve Not Closed. The closed position of all individual lance safety shutoff valves and fuel header shutoff valves shall be monitored, and failure of any valve to close shall be alarmed.

7.10.2.4 Solid Fuel.

7.10.2.4.1 Solid Fuel Feeder Tripped. An alarm shall indicate when a feeder has tripped.

7.10.2.4.2 Solid Fuel Transport Air Fan Tripped. An alarm shall indicate when a transport air fan has tripped.

7.10.2.4.3 Loss of Solid Fuel. An alarm shall indicate when the feeder is running and the fuel flow detecting device(s) indicates no fuel flow.

Copyright 2014 National Fire Protection Association (NFPA). Licensed, by agreement, for individual use and download on October 4, 2014 to LEADER and READER for designated user PATTARAPORN SRITRAKOOL. No other reproduction or transmission in any form permitted without written permission of NFPA. For inquires or to report unauthorized use, contact licensing@nfpa.org.

Chapter 8 Heat Recovery Steam Generators and Other Combustion Turbine Exhaust Systems

8.1 Application.

8.1.1 Chapter 8 shall apply to all fired and unfired heat recovery steam generator (HRSG) systems or other combustion turbine exhaust systems and their associated combustion turbines.

8.1.2 Chapters 1 through 4 and 8 shall not dictate the methods or details of the combustion turbine manufacturer's product or control system. Chapter 8 shall identify specific functional considerations for proper interfacing related to the safety aspects of the combined combustion turbine and the HRSG or other combustion turbine exhaust systems.

8.1.3 Chapter 8 shall not address multiple combustion turbines exhausting into a single HRSG, nor shall it address single or multiple combustion turbines exhausting into multiple HRSGs through a header. Any system applying this concept shall require special design considerations that are not addressed in Chapter 8.

8.1.4 This chapter shall be used in conjunction with Chapter 1 through Chapter 4 and requires the coordination of operation procedures, control systems, interlocks, and structural design. Where conflicts exist, the requirements of Chapter 8 shall apply.

8.2 Purpose.

8.2.1 The purpose of this chapter shall be as follows:

(1) To contribute to operating safety
(2) To prevent explosions, implosions, and uncontrolled fires in HRSG sections and other exhaust system ductwork
(3) To establish minimum requirements for the design, installation, operation, and maintenance of heat recovery steam generators and their fuel-burning, air supply, and combustion products removal systems
(4) To require the coordination of operating procedures and components, control systems, interlocks, and structural design
(5) To require the establishment of training programs in equipment operation and maintenance, for both new and existing personnel, to ensure that minimum standards for operation and maintenance are understood and followed

8.2.2* The user of this code shall recognize the complexity of firing with regard to the type of equipment used and the characteristics of the fuel.

8.2.3 Emphasis shall be placed on the importance of component coordination and on knowledge of expected operating conditions.

8.3 Project Coordination.

8.3.1 General.

8.3.1.1 The ability of the combustion turbine to satisfy the purge flow requirements through the HRSG enclosure or other combustion turbine exhaust systems as required in 8.8.4 shall be confirmed in the basic design phase.

8.3.1.2 The HRSG system or other combustion turbine exhaust systems shall be designed to meet the user's specified modes of operation.

8.3.1.3 Systems components and control loops shall be compatible and capable of stable operation and control during both steady-state and transient conditions.

8.3.2 Project Inception. In the project inception phase, the following shall be accomplished to ensure a plant design that meets expected operating modes and reliability needs:

(1) Establishment of plant operating parameters
(2) Identification of site-related constraints
(3) Review of the steam cycle, including generation of a family of heat balance diagrams for the expected operating ranges and modes
(4) Conceptualization of plant layout to provide for personnel safety, operability, and maintenance needs
(5) Definition and verification of requirements of worst-case operating transients, including start-ups
(6) Definition of required test program
(7) Definition of start-up criteria and goals
(8) Identification of the authority having jurisdiction. If multiple authorities having jurisdiction are identified, the scope of each authority having jurisdiction must be defined.

8.3.3 Design.

8.3.3.1* The project approach shall include full evaluation of all systems and components to ensure compatibility, interface requirements, system dynamics, and the ability to meet all plant operating parameters.

8.3.3.2* This evaluation shall use dynamic simulation, prior operating experience, or both before equipment is selected.

8.3.3.3 Electrical area classifications shall be established by the owner or the owner's designated representative and shall be provided to the system designer prior to commencement of detailed design.

8.3.4* Project coordination, including proper integration of the various system components, shall be the responsibility of the owner's designated representative from system inception through commercial operation in order to enhance equipment reliability and personnel safety.

8.4 Equipment.

8.4.1 General. Equipment required by this code shall be approved or shall have a demonstrated history of reliable operation for the specified service.

8.4.2 Combustion Turbine.

8.4.2.1* Fuel Supply.

8.4.2.1.1 Liquid Fuels.

8.4.2.1.1.1 Two stop valves or equivalent valves in series, with proof of closure, shall be provided in each fuel line to the combustion turbine. Means shall be provided to prevent or relieve excess pressure between the two valves (double block and drain).

8.4.2.1.1.2 Three stop valves or equivalent valves in series, with proof of closure, shall be provided in each fuel line to the combustion turbine for units with combustion turbine purge credit provisions in accordance with 8.8.4.6. Means shall be provided to prevent or relieve excess pressure between these valves (triple block and double drain).

8.4.2.1.2 Gaseous Fuels.

8.4.2.1.2.1 Two stop valves or equivalent valves in series, with proof of closure, shall be provided in the line to the combustion turbine. An automatic vent valve shall be provided between the two valves (double block and vent).

Copyright 2014 National Fire Protection Association (NFPA). Licensed, by agreement, for individual use and download on October 4, 2014 to LEADER and READER for designated user PATTARAPORN SRITRAKOOL. No other reproduction or transmission in any form permitted without written permission of NFPA. For inquires or to report unauthorized use, contact licensing@nfpa.org.

8.4.2.1.2.2 Three stop valves or equivalent valves in series, with proof of closure, shall be provided in each fuel line to the combustion turbine for units with combustion turbine purge credit provisions in accordance with 8.8.4.6. Automatic vent valves shall be provided between these valves (triple block and double vent).

8.4.2.2* Interlocks.

8.4.2.2.1 The HRSG system's required interlocks shall prevent starting of the combustion turbine unless the HRSG starting conditions are satisfied, which shall include but not be limited to the following:

(1) The water levels in drum(s), if provided, are within the defined start-up range.
(2) The feedwater supply system is available to respond to demand.
(3) The pressure in steam or water spaces is not high.
(4) The exit temperature of duct burner(s), if provided, is not high.
(5) The position of stack closure, if provided, is correct.
(6) The pressure in the HRSG enclosure is not high.
(7) The augmented air supply, if provided, is in operation. *(See 8.8.4.2.4.)*
(8) Where a combustion turbine purge credit is being used, all fuel systems connected to the HRSG are satisfactorily isolated.

8.4.2.2.2 The following combustion turbine interlocks shall be provided when fuel gas is being burned:

(1) Failure of the fuel gas vent valve required in 8.4.2.1.2.2 to be proved open during the combustion turbine purge shall cause the purge and light-off sequence to be terminated.
(2) During combustion turbine light-off as described in 8.8.4, fuel gas pressure downstream of the fuel gas flow control valve or fuel gas flow to the turbine shall be monitored and shall cause the light-off attempt to be terminated and shall cause purge credit to be lost if the maximum allowable value as determined by the combustion turbine manufacturer is exceeded.

8.4.2.2.3* Signals shall be provided to the combustion turbine control system to initiate a change in the combustion turbine operating mode if HRSG conditions deviate beyond preset safety limits, including but not limited to those listed in Table 8.4.2.2.3.

8.4.2.2.4 The combustion turbine exhaust system's required interlocks shall prevent starting the combustion turbine unless the following starting conditions are satisfied:

(1) The pressure in the combustion turbine exhaust ductwork is not high.
(2) The tempering air supply, if provided, is in operation.

8.4.2.3 Operating Interfaces.

8.4.2.3.1 Combustion turbine loading and low-load hold/soak periods shall be established based on the following HRSG parameters:

(1) Tube and drum metal temperatures
(2) Differential metal temperatures within a particular component (e.g., steam drum)
(3) Rate of change of critical temperatures
(4) Drum water level

Table 8.4.2.2.3 HRSG Interlock Conditions and Responses

Condition	Response
Water in drum(s) below minimum permitted level	Reduce combustion turbine load or trip combustion turbine as required by HRSG manufacturer.*
Pressure in combustion turbine exhaust plenum high	Trip combustion turbine.
Position of stack closure (if provided) not correct *(See 8.9.5.1.2 and 8.9.5.1.3.)*	Reduce combustion turbine load or initiate a fired shutdown of the combustion turbine.

*Due to rapid steam pressure rise following a steam turbine trip, drum water level drops but inventory remains the same. A combustion turbine response to this transient should not be required, and a delay for the time required immediately after the steam turbine trip to permit pressure recovery and level restoration should be permitted.

8.4.2.3.2 The control system or the operator shall trip the combustion turbine in the case of an emergency that would lead to a safety hazard or catastrophic failure after the actions in 8.4.2.2.3 have been accomplished.

8.4.3* HRSG Fuel-Burning System.

8.4.3.1 Introduction.

8.4.3.1.1 The fuel-burning system shall contain the following subsystems as applicable:

(1) Fuel supply
(2) Main burner
(3) Igniter
(4) Atomizing media supply (if included)
(5) Combustion products removal
(6) Augmented air supply

8.4.3.1.2 Each igniter/burner element shall have a purged and cooled flame detector port embodied in the design.

8.4.3.2 Fuel Supply.

8.4.3.2.1 General.

8.4.3.2.1.1 The fuel supply equipment shall be sized and arranged to ensure a continuous fuel flow for all operating requirements of the unit, which shall include coordination of the main fuel control valve, burner safety shutoff valves, and associated piping volume to ensure against fuel pressure transients that exceed burner limits for stable flame as a result of placing burners in service or taking them out of service.

8.4.3.2.1.2 The fuel supply equipment shall be designed to prevent contamination of the fuel.

8.4.3.2.1.3 Maintenance access to fuel supply system components shall be provided.

8.4.3.2.1.4 Drains shall be provided at low points in the fuel supply piping.

8.4.3.2.1.5 The fuel supply equipment shall be capable of continuing the design fuel flow during anticipated exhaust gas pressure pulsations at the burner.

Copyright 2014 National Fire Protection Association (NFPA). Licensed, by agreement, for individual use and download on October 4, 2014 to LEADER and READER for designated user PATTARAPORN SRITRAKOOL. No other reproduction or transmission in any form permitted without written permission of NFPA. For inquires or to report unauthorized use, contact licensing@nfpa.org.

8.4.3.2.1.6 The fuel supply equipment shall be designed for the operating environment and ambient conditions, including external conditions such as fire or mechanical damage.

8.4.3.2.1.7 The integrity of flexible hoses or swivel joints shall be maintained.

8.4.3.2.1.8 The fuel piping materials and system design shall be in accordance with ASME B31.1, *Power Piping*, or ASME B31.3, *Process Piping*.

8.4.3.2.1.9* A manual emergency shutoff valve that is accessible in the event of fire shall be provided in the HRSG area.

8.4.3.2.1.10 Tightness Test.

(A) Tests of the main safety shutoff valves and the individual burner safety shutoff valves shall be performed.

(B) Permanent provisions shall be included in the fuel piping to allow testing for leakage.

8.4.3.2.1.11 Where provided, individual burner safety shutoff valves shall be located close to the burner to reduce the volume of fuel left in the burner lines located downstream of the valves.

8.4.3.2.2 Additional Requirements for Gaseous Fuels.

8.4.3.2.2.1* Prevention of Overpressure.

(A) The portion of the fuel supply system upstream of the fuel control valve shall be designed so as to prevent the exceeding of design pressure in the fuel-burning system, even in the event of failure of the main supply constant fuel pressure regulator(s).

(B) Where full relieving capacity is not installed, the piping system shall be designed for the full supply pressure up to and including all individual burner and igniter safety shutoff valves.

8.4.3.2.2.2* Leakage and Ventilation.

(A) Leakage of gaseous fuel into an idle HRSG shall be prevented.

(B) An atmospheric vent shall be installed between redundant shutoff valves in any header for the main or igniter gaseous fuel supply.

8.4.3.2.2.3 Triple Block and Double Vent Valve Arrangement. Three stop valves or equivalent valves in series, with proof of closure, shall be provided in each fuel line to the duct burner for units with combustion turbine purge credit provisions in accordance with 8.8.4.6. Automatic vent valves shall be provided between these valves. The most downstream valve for a duct burner installation shall be located in each burner line (runner) in accordance with 8.4.3.2.1.11.

8.4.3.2.3 Additional Requirements for Liquid Fuel.

8.4.3.2.3.1 In addition to the requirements of NFPA 30, *Flammable and Combustible Liquids Code*, the fill and recirculation lines to storage tanks shall discharge below the liquid level to prevent free fall, which generates static electrical charges and increases vaporization.

8.4.3.2.3.2 Strainers, filters, traps, sumps, or other such items shall be provided to remove harmful contaminants.

8.4.3.2.3.3 Means shall be provided to prevent or relieve excess pressure resulting from expansion of entrapped liquid in the fuel system.

8.4.3.2.3.4 Triple Block and Double Drain Valve Arrangement. Three stop valves or equivalent valves in series, with proof of closure, shall be provided in each fuel line to the duct burner for units with combustion turbine purge credit provisions in accordance with 8.8.4.6. Means shall be provided to prevent or relieve excess pressure between these valves.

8.4.3.2.3.5 Relief valve outlets, vents, drains, and telltales shall be provided with piping to allow safe discharge of liquids or vapors and shall be designed for the expected range of external temperatures and protected against mechanical damage.

8.4.3.2.3.6 Instrument and control piping and tubing containing liquid fuel shall be designed for the expected range of external temperatures and protected against mechanical damage.

8.4.3.2.3.7 Leakage of liquid fuel into an idle HRSG shall be prevented.

8.4.3.2.3.8* Liquid fuel shall be delivered to the burners at a temperature and pressure recommended by the burner manufacturer, to ensure that the liquid fuel is at the viscosity necessary for proper atomization.

8.4.3.2.3.9 Heated Systems.

(A) If heating of liquid fuel is necessary, it shall be accomplished without contamination or coking.

(B) Heated systems shall be designed and operated to prevent vapor binding of pumps and interruption of the fuel supply.

8.4.3.2.3.10 Recirculation.

(A) Recirculation provisions shall be incorporated for controlling the viscosity of the liquid fuel to the burners.

(B) Liquid fuel shall be prevented from entering the burner header system through recirculating valves, particularly from the fuel supply system of other equipment.

(C) Check valves shall not be used for preventing liquid fuel from entering the burner header system through recirculation valves in heavy oil service.

8.4.3.3 Atomizing Media.

8.4.3.3.1 Atomizing media, where required, shall be supplied free of contaminants and shall meet the requirements of the burner manufacturer.

8.4.3.3.2 Provisions shall be made to ensure that fuel cannot enter the atomizing media line at any time.

8.4.3.3.3 The atomizing media subsystem shall be designed to allow cleaning and maintenance.

8.4.3.4 Ignition.

8.4.3.4.1 Igniter parts exposed to combustion turbine exhaust gas, radiation, or flame shall be designed and fabricated of materials capable of withstanding the operating conditions.

8.4.3.4.2 Igniters shall be shielded from the effects of the combustion turbine exhaust gas to ensure a stable flame under all operating conditions.

8.4.3.4.3 Maintenance.

8.4.3.4.3.1 Ignition devices shall be removable for maintenance while the HRSG is in service.

8.4.3.4.3.2 Precautions shall be taken for personnel protection when removing such parts during operation.

8.4.3.4.4 Ignition transformers shall be housed in an enclosure complying with the relevant requirements of *NFPA 70*,

Copyright 2014 National Fire Protection Association (NFPA). Licensed, by agreement, for individual use and download on October 4, 2014 to LEADER and READER for designated user PATTARAPORN SRITRAKOOL. No other reproduction or transmission in any form permitted without written permission of NFPA. For inquires or to report unauthorized use, contact licensing@nfpa.org.

National Electrical Code, regarding electrical classification and environment and shall be located adjacent to the igniter.

8.4.3.4.5 The ignition transformer shall not be energized before the HRSG enclosure purge is completed, and shall be de-energized at the end of the igniter trial for the ignition period.

8.4.3.5 Main Burner.

8.4.3.5.1 Burner Elements.

8.4.3.5.1.1 The burner elements shall be designed for operation with the fuel(s) specified.

8.4.3.5.1.2 The burner shall be designed to produce a stable flame for its operating range.

8.4.3.5.1.3 Burner parts exposed to turbine exhaust gas, radiation, or flame shall be designed and fabricated of materials capable of withstanding the operating conditions.

8.4.3.5.1.4 Provision shall be made for visual observation of the burner flame, including the ignition zone.

8.4.3.5.1.5 Access shall be provided to the burner components and hardware.

8.4.3.5.1.6* The main burner subsystem shall be designed so that the fuel inputs are supplied to the HRSG continuously during burner operation and within stable flame limits.

8.4.3.5.1.7* Where Class 3 or Class 3 Special igniters are used, the limits of stable flame for each burner subsystem producing a separate flame envelope shall be determined by tests.

(A) These tests shall verify that transients generated in the fuel and combustion turbine exhaust gas subsystems or maldistribution of the combustion turbine exhaust gas do not adversely affect the burners in operation.

(B) These tests shall include the expected range of available fuels.

8.4.3.5.1.8 Where Class 1 or Class 2 igniters are used, the tests in 8.4.3.5.1.7 shall be performed over the operating range where the system is designed for firing without ignition support.

(A) In addition, the tests in 8.4.3.5.1.7 shall be performed with the ignition subsystem in service to verify that the igniters that are furnished meet the requirements of the class specified in the design.

(B) Any resulting extended turndown range shall be available only where Class 1 igniters are in service and flame is proven.

8.4.3.5.2 Additional Burner Requirements for Liquid Fuel.

8.4.3.5.2.1 Provisions shall be made for cleaning of the burner nozzle and tip.

8.4.3.5.2.2 Provisions shall be included for scavenging the passages of a liquid fuel burner into the HRSG with that burner's igniter in service.

8.4.3.6* Augmented Air.

8.4.3.6.1 Where provided, the fan(s) supplying augmented air to the duct burners shall be operated in accordance with the instructions provided by the duct burner manufacturer, the supplier of the augmented air system, and the organization having responsibility for the overall design.

8.4.3.6.2 On failure of the augmented air supply, means shall be provided to prevent hot gases from exiting the HRSG through the augmented air system.

8.5* HRSG Enclosure and Other Combustion Turbine Exhaust Systems.

8.5.1* The HRSG or other combustion turbine exhaust systems shall be sized and arranged to maintain combustion turbine exhaust gas backpressure within design limits and to remove the products of combustion at the same rate that they are generated by the fuel-burning process during operation of the unit.

8.5.2* The HRSG enclosure or other combustion turbine exhaust systems shall be capable of withstanding the design pressure without permanent deformation due to yield or buckling.

8.5.3* HRSG Implosions. For HRSGs that use an ID fan, the HRSG negative transient design pressure shall be at least as negative as, but shall not be required to be more negative than, the test block capability of the ID fan when corrected to ambient temperature.

8.5.4* Expansion.

8.5.4.1 Expansion provision shall be made for the movement of the combustion turbine exhaust duct and the HRSG enclosure and other combustion turbine exhaust systems.

8.5.4.2 These expansion joints shall withstand at least the highest design pressure for which either duct is designed.

8.5.5* Fin-Metal Tube Fires.

8.5.5.1 The initial response to a fire inside the HRSG shall include the removal of all fuel from the combustion turbine and the HRSG.

8.5.5.2 A procedure shall be provided to contain, confine, or seal off a fin-metal tube fire and to protect the buildings and adjacent equipment.

8.5.6 The HRSG ductwork between the combustion turbine outlet and the duct burners shall be designed to provide distribution of combustion turbine exhaust gas as required by the burner manufacturer for stable burner operation.

8.5.7 All HRSG units that utilize liquid and heavier-than-air gaseous fuels shall have a duct design that meets the criteria of 8.5.7.1 through 8.5.7.3.

8.5.7.1* All low points shall have slopes to ensure that no dead pockets exist in the bottom of the ducts at points other than a designed low point.

8.5.7.2* Drains shall be installed at the low points to facilitate clearing fuel from the HRSG enclosure.

8.5.7.3 Provisions shall be included in the HRSG design and operation to prevent liquid fuels from being absorbed into the insulation.

8.6 Electrical.

8.6.1 Voltages.

8.6.1.1 Electrical equipment shall be protected against transient voltages according to the manufacturer's specification.

8.6.1.2 As a minimum, the system shall function at voltages up to 10 percent above the nominally rated voltage and up to 10 percent below the nominally rated voltage.

Copyright 2014 National Fire Protection Association (NFPA). Licensed, by agreement, for individual use and download on October 4, 2014 to LEADER and READER for designated user PATTARAPORN SRITRAKOOL. No other reproduction or transmission in any form permitted without written permission of NFPA. For inquires or to report unauthorized use, contact licensing@nfpa.org.

8.6.2 All wiring shall comply with the requirements of *NFPA 70, National Electrical Code*.

8.6.3 All high voltage equipment shall be marked in accordance with the requirements of *NFPA 70, National Electrical Code*.

8.6.4* Where an area is identified as a hazardous location as defined by Article 500 of *NFPA 70, National Electrical Code*, the equipment design, the types of enclosures, and the wiring methods shall be as specified by that code.

8.6.5 The electrical supply to the burner management system and associated subcircuits shall be protected by circuit breakers or fuses.

8.6.6 On initiation of a duct burner master fuel trip, failure of an electrical power supply shall not impede the shutdown process.

8.7 Controls, Monitoring, Alarms, and Interlocks.

8.7.1* Control Functions.

8.7.1.1 General.

8.7.1.1.1 A single component failure shall not cause loss of the control system's critical functions identified in 8.7.4.3.

8.7.1.1.2 On-Line Maintenance.

8.7.1.1.2.1 Equipment shall be designed and procedures established to permit on-line maintenance of the control equipment.

8.7.1.1.2.2 Lockout or tag-out procedures shall be followed.

8.7.1.1.3 Procedures for calibrating and testing of controls and interlocks shall be provided.

8.7.1.2 Fuel Control.

8.7.1.2.1 Fuel input shall be controlled to maintain stable firing conditions.

8.7.1.2.2 Remote manual operation shall be permitted.

8.7.1.2.3 Minimum and maximum limits on the fuel input shall be established to prevent fuel flow beyond the stable limits of the fuel-burning system.

8.7.1.3 Feedwater/Drum Level Control.

8.7.1.3.1 The water level in each drum shall be maintained automatically.

8.7.1.3.2 Remote manual operation of the feedwater control device shall be provided.

8.7.2 Monitoring.

8.7.2.1 Information about operating events shall be displayed to the operator.

8.7.2.2 Recording or trend displays of critical parameters listed in 8.7.2.3, taken at intervals no greater than 5 seconds, shall be provided to the operator at the operator location.

8.7.2.2.1 Where accessed through a video display unit (VDU) display in response to an alarm condition, the trend displays shall appear within 5 seconds.

8.7.2.2.2* Where VDU trend displays are used, the displays shall provide data that are current to within the prior 30 minutes at minimum, and the data provided shall have been stored when change exceeds 1 percent of calibrated instrument range.

8.7.2.3* The following HRSG parameters shall be continuously recorded on charts, or the data shall be logged and trended in accordance with 8.7.2.2.1 and 8.7.2.2.2:

(1) Water level in each steam drum
(2) Fuel pressure at the duct burner(s)
(3) Steam pressure at each pressure level
(4) Duct burner exit temperature before the first tube bank
(5) Atomizing media pressure (for liquid fuels only)
(6) Combustion turbine exhaust gas temperature upstream of the emissions control catalyst(s)
(7) HRSG flue gas exit temperature

8.7.3 Alarms.

8.7.3.1 Functional Requirements.

8.7.3.1.1 The alarm system shall alert the operator to specific upset conditions.

8.7.3.1.2 Alarms shall be provided to indicate equipment malfunction, hazardous conditions, or misoperation.

8.7.3.1.3 Defeating Alarms.

8.7.3.1.3.1 Alarms shall not be manually defeated.

8.7.3.1.3.2 Where equipment malfunction makes it necessary to defeat an alarm, it shall be performed by authorized personnel, and the alarm shall be tagged or logged as inoperative in accordance with plant operating procedures.

8.7.3.1.4 Audible and Visual Alarms.

8.7.3.1.4.1 Alarm systems shall be designed so that, for the alarms required by 8.7.3.2, the operator receives audible as well as visual signals.

8.7.3.1.4.2 The operator shall be permitted to silence the audible signal.

8.7.3.2 Required Alarms.

8.7.3.2.1 General Alarms. The following alarms shall be required:

(1) Each interlock trip, alarmed individually
(2) HRSG steam pressure (high) — high HRSG pressure at each steam pressure level
(3) Loss of interlock power
(4) Loss of control power
(5) Burner (if provided) safety shutoff valves not closed
(6) Steam drum(s) (if provided) water level (low)
(7) Loss of combustion turbine load
(8) Duct burner (if provided) outlet temperature (high)
(9) Flame detector (if provided) cooling air pressure (low)
(10) Loss of augmented air (if provided) supply
(11) Class 1 or Class 2 ignition fuel header (if provided) pressure (high and low)

8.7.3.2.1.1 Loss of interlock power shall be sensed and alarmed and shall include all sources of power required to complete interlock functions. For example, if both a 125 V dc electric circuit and a compressed air circuit are required for an interlock scheme, then loss of either shall be annunciated.

8.7.3.2.1.2 Loss of control power shall be sensed and alarmed to include any sources of power for the control systems. For example, if both a 125 V dc electric circuit and a compressed air circuit are required for control, then loss of either shall be annunciated.

Copyright 2014 National Fire Protection Association (NFPA). Licensed, by agreement, for individual use and download on October 4, 2014 to LEADER and READER for designated user PATTARAPORN SRITRAKOOL. No other reproduction or transmission in any form permitted without written permission of NFPA. For inquires or to report unauthorized use, contact licensing@nfpa.org.

8.7.3.2.1.3 The closed position of burner safety shutoff valves shall be monitored, and failure of any valve to close following a trip shall be alarmed.

8.7.3.2.2 Additional Alarms for Gaseous Fuels. The following additional alarms shall be required when gaseous fuels are being fired:

(1) Supply pressure (high and low)
(2) Burner header pressure (high and low)
(3) Flowmeter pressure (high and low)

8.7.3.2.2.1 The gas pressure supplied to the plant shall be monitored at a point upstream of the final constant fuel pressure regulator, main fuel control, and main safety shutoff valves.

8.7.3.2.2.2 The pressure at the gas flowmeter shall be monitored at the upstream tap if the gaseous fuel flowmeter is part of the combustion control system and is not pressure compensated.

8.7.3.2.3 Additional Alarms for Liquid Fuels.

8.7.3.2.3.1 The following additional alarms shall be required when liquid fuels are being fired:

(1) Fuel supply pressure (low)
(2) Burner header pressure (low)
(3) Atomizing media pressure (low)
(4) Heated fuel temperature (low) or viscosity (high)

8.7.3.2.3.2 The fuel supply pressure shall be monitored at a point upstream of the fuel control and safety shutoff valves.

8.7.4 Interlocks.

8.7.4.1 Functional Requirements.

8.7.4.1.1 The HRSG interlocks shall be installed to protect personnel from injury and to protect equipment from damage.

8.7.4.1.2 The interlock system functions shall limit actions to a prescribed operating sequence or initiating trip device(s).

8.7.4.1.3 Operating personnel shall be made aware of the limitations of the interlock system, given that it is possible to achieve conditions conducive to an explosion without their detection by any of the mandatory automatic trip devices, even though such devices are adjusted and maintained.

8.7.4.1.4 Removal of Safety Interlock Device.

8.7.4.1.4.1 Whenever a safety interlock device has been removed from service for maintenance, testing, or repair, the device shall be tagged and the action governed by operating procedures.

8.7.4.1.4.2 Other means shall be substituted to supervise the interlock function.

8.7.4.1.5 The design of an interlock system shall include the following:

(1) Supervision of the starting procedure and operation
(2) Tripping of the minimum amount of equipment in the required sequence when the safety of personnel or equipment is jeopardized
(3) Indication of the initiating cause of the trip and prevention of the start of any portion of the process until operating conditions are established
(4) Coordination of the trip devices into an integrated system
(5) Provisions of instrumentation to enable the operator or automatic equipment to complete the operating sequence
(6) Provision for preventive maintenance
(7) Interlocks that do not require defeating in order to start or operate equipment
(8) The independence of mandatory duct burner master fuel trip sensing elements and circuits from all other control elements and circuits except as permitted in 8.7.4.1.5.1 and 8.7.4.1.5.2
(9) Prevention of the misoperation of the interlock system due to an interruption or restoration of the interlock energy supply

8.7.4.1.5.1 Individual burner flame detectors shall be permitted to be used for initiating duct burner master fuel trip systems.

8.7.4.1.5.2 Combustion turbine exhaust gas flow, combustion turbine load, airflow measurement, and auctioneered drum level signals from the HRSG control system shall be permitted to be used for a master fuel trip, provided all the following conditions are met:

(1) These interlocks are hardwired into the burner management system.
(2) Tripping set points are protected from unauthorized changes.
(3) Any single component failure of these sensing elements and circuits does not prevent a mandatory master fuel trip.

8.7.4.1.6 Interlock functions shall be initiated by one or more of the following:

(1) A switch or transmitter independent of control functions and signals
(2) Two analog signals with a divergence alarm
(3) Three analog signals employing an auctioneering system and a divergence alarm or other fault diagnostic alarm

8.7.4.2 Flame Detection.

8.7.4.2.1 Burner Supervision. Each burner element or zone shall be supervised individually, and on detection of loss of flame, the associated individual burner safety shutoff valve shall close automatically.

8.7.4.2.1.1 Redundant Flame Detectors.

(A) Where two flame detectors are fitted to each firing element, the flame detectors shall be arranged to alarm on loss of flame from one detector and to trip the system on loss of flame from two detectors.

(B) With one detector out of service, the remaining detector shall trip the system on loss of flame detection.

8.7.4.2.1.2 Flame Detection with Class 1 Igniters.

(A) Where Class 1 igniters are provided, the main burner flame shall be proven either by the flame detector or by proving the igniter.

(B) At least one flame detector shall be provided for each burner to detect the burner flame or igniter flame where a Class 1 igniter is provided.

8.7.4.2.1.3 Flame Detection with Class 2 Igniters. Burners with Class 2 igniters shall have at least two flame detectors.

(A) One detector shall detect the main burner flame and shall not detect the igniter flame.

(B) The second detector shall detect the igniter flame during prescribed light-off conditions.

Copyright 2014 National Fire Protection Association (NFPA). Licensed, by agreement, for individual use and download on October 4, 2014 to LEADER and READER for designated user PATTARAPORN SRITRAKOOL. No other reproduction or transmission in any form permitted without written permission of NFPA. For inquires or to report unauthorized use, contact licensing@nfpa.org.

8.7.4.2.1.4 Flame Detection with Class 3 Igniters. Burners with Class 3 igniters shall have at least one flame detector.

(A) The detector shall detect the igniter flame.

(B) The detector also shall detect the main burner flame after the igniter is removed from service at the end of the main burner trial for ignition.

8.7.4.2.1.5 Self-Checking Flame Detector. Where a self-checking flame detector is provided to each burner, a burner trip shall occur if the detector exhibits a self-check fault.

(A) Where two self-checking flame detectors are fitted to each burner, the flame detectors shall alarm on loss of flame or the self-check failure of one detector and shall trip the burner on loss of flame or the self-check failure of two detectors.

(B) With one detector out of service, the remaining detector shall trip the burner on loss of flame or self-check failure.

8.7.4.2.2 Where a hazardous condition results from loss of flame in more than one burner element or zone, a duct burner master fuel trip shall be initiated.

8.7.4.2.3 Regardless of the number or pattern of flame loss indications used for tripping, flame loss indication on a firing element shall initiate an alarm because any fuel input that does not ignite and burn creates a hazard.

8.7.4.2.4 Field testing shall be required to validate basic functions of flame tripping.

8.7.4.2.4.1 These tests shall be performed on representative units.

8.7.4.2.4.2 These tests shall not be used to replace an acceptance test related to proof of design, function, and components.

8.7.4.2.5 Field tests shall be performed to establish optimum sighting angles of firing elements or igniters and to check the angular range of the flame detector in relation to the firing elements or igniters.

8.7.4.3 Duct Burner Master Fuel Trip. For an operating duct burner, including the start-up or shutdown sequences, a duct burner master fuel trip shall be initiated by the following conditions:

(1) Low fuel pressure
(2) Combustion turbine exhaust or fresh air (if provided) flow across the duct burner that drops below the minimum required for operation of the duct burner as specified by the burner manufacturer or as proven by trial; it is permitted to infer this flow from the operating status of the combustion turbine, fresh air fan (if provided), and damper(s) (if provided) position(s)
(3) Combustion turbine trip except for systems operating as defined in 8.10.2.4
(4) Loss of all burner flame other than during a normal duct burner shutdown sequence
(5) Partial loss of flame determined to create a hazardous accumulation of unburned fuel at any burner element or zone
(6) Loss of duct burner element(s) resulting in incorrect element firing configuration, in accordance with 8.8.5.8.3.2
(7) Light-off failure of first burner in multiple burner operation
(8) Failure to prove a safety shutoff valve closed on command to close
(9) Closing of last individual burner safety shutoff valve other than during a normal duct burner shutdown sequence
(10) High fuel pressure
(11) Low water level on high pressure section of HRSG
(12) Loss of energy supply for boiler control, burner management, or interlock system
(13) Low atomizing media (if provided) supply pressure
(14) Detection of burner management system malfunction
(15) Manual trip *[See 4.11.6(8).]*
(16) Loss of augmented air supply where the operation of the duct burner requires augmented air
(17) Fresh air (if provided) transfer failure *(See 8.10.2.4.)*
(18) Logic controller failure *[See 4.11.6(10) and 4.11.6(11).]*

8.7.5 Burner management system logic shall be maintained either in nonvolatile storage or in other memory that retains information on the loss of system power.

8.8 Purge, Start-up, Operation, and Shutdown of HRSG and Other Combustion Turbine Exhaust Systems.

8.8.1* General.

8.8.1.1 The requirements of Section 8.8 shall apply where gaseous or liquid fuels are being burned in HRSG or other combustion turbine exhaust systems, and these requirements shall include interlocks for ensuring prescribed action, burner management system trips, flame detection, and an indication of the status of the operating sequences.

8.8.1.2 In addition, the requirements of Section 8.8 shall apply to the design, installation, and operation of duct burners in HRSG systems. No specific degree of automation beyond the minimum specified safeguards is defined or shall be required, because this is subject to factors such as, but not limited to, physical size of the unit, use of the central control room, degree of reliability required, and experience level of operating personnel.

8.8.1.2.1 A trained operator with access to control equipment shall be stationed to perform the required actions to ensure operation in accordance with the manufacturer's recommendations.

8.8.1.2.2 The start-up of the burner as a first-time function shall be accomplished by an operator at the burner location who has a direct view of the burner.

8.8.1.2.3 Recycling of the burner in response to steam demand shall be permitted to be an automatic sequence, provided the combustion turbine has not tripped.

8.8.1.2.4 Equipment shall be provided to control HRSG inputs to maintain stable flame throughout the full operating range in accordance with the manufacturer's recommendations.

8.8.2 General Operating Requirements.

8.8.2.1 Prior to Starting. Prior to the starting of a unit, action shall be taken to prevent fuel from entering the HRSG or other combustion turbine exhaust systems.

8.8.2.2 Ignition.

8.8.2.2.1 The associated igniter for a duct burner shall always be used unless the burner is specifically designed to be lit from an adjacent burner.

8.8.2.2.2 Burners shall not be lit from any hot surface.

8.8.2.3 Low Capacity Fuel Pressure. Where operating at low capacity, duct burner fuel pressure shall be maintained above

Copyright 2014 National Fire Protection Association (NFPA). Licensed, by agreement, for individual use and download on October 4, 2014 to LEADER and READER for designated user PATTARAPORN SRITRAKOOL. No other reproduction or transmission in any form permitted without written permission of NFPA. For inquires or to report unauthorized use, contact licensing@nfpa.org.

the minimum pressure for stable flame by reducing the number of burners in service as necessary.

8.8.2.4 Gaseous Fuel. Before maintenance is performed on the fuel header, it shall be purged. *(See Annex K.)*

8.8.2.5 Liquid Fuel. Before maintenance is performed on the fuel header, it shall be drained and purged. *(See Annex K.)*

8.8.2.6 Liquid Fuel — Scavenging of Liquid Fuel Burner Passages.

8.8.2.6.1 Burner passages shall not be scavenged into a nonoperating HRSG.

8.8.2.6.2 Combustion turbine exhaust flow shall be functioning and shall be maintained during the scavenging process.

8.8.2.6.3 Igniters, with ignition established, shall be in service when scavenging fuel passages into the HRSG.

8.8.2.7 Sequencing.

8.8.2.7.1 Sequencing shall be required to ensure that operating events occur in the prescribed order.

8.8.2.7.1.1 Written procedures shall be provided to sequence the start-up and shutdown of the HRSG system in accordance with this code and with the manufacturer's recommendations.

8.8.2.7.1.2 Sequencing also shall be utilized when burners are being removed from operation or when burners are being added to operation.

8.8.2.7.2* The start-up and shutdown sequences outlined in Section 8.8 shall be followed.

8.8.2.7.3* Placing Duct Burners into Service.

8.8.2.7.3.1 Duct burners shall be placed in service and removed from service in a sequence specified by operating instructions and verified by actual experience with the unit.

8.8.2.7.3.2 Duct burners shall be placed in service with fuel flow as recommended by the manufacturer.

8.8.2.7.4 If the fuel pressure at the burner header is used as a guide in maintaining the necessary fuel flow per burner, it shall be maintained automatically within prescribed limits as additional burners are placed in service.

8.8.2.7.5 Duct burners shall be operated in accordance with the manufacturer's specifications and operating procedures.

8.8.2.7.6 This procedure shall incorporate the following operating objectives:

(1) Purge shall be completed in accordance with 8.8.4 and 8.8.5.
(2) No light-off of the duct burner(s) shall occur until after the combustion turbine has established stable operation with an exhaust gas flow not less than that necessary for duct burner operation.

8.8.2.7.7 Each unit shall be tested during commissioning to determine whether any modifications to the basic procedures are needed to obtain reliable ignition and system operation.

8.8.2.7.8 The unit shall be operated within the specified parameters, and any modifications or deviations shall be made only after the need for such changes has been determined by operating experience and system review.

8.8.3 Cold Start Preparation. Preparation for starting shall require an inspection that includes the following:

(1) A unit free of foreign material and not in need of repair
(2) A unit inspected for accumulated liquid fuel, and draining and cleaning performed if such accumulation is present
(3) All personnel evacuated from the unit and associated equipment and all access and inspection doors closed
(4) All combustion turbine fuel stop valves (or equivalent) and duct burner and igniter safety shutoff valves proved closed by valve position and all ignition sources de-energized

Exception: Where the igniter capacity is 1.5 MW_t (5 million Btu/hr) or less, proof of closure of igniter safety shutoff valves by means other than valve position shall be permitted.

(5) Gaseous fuel system vents open and venting to an outside location that does not present a hazard; fuel lines drained of condensate
(6) Circulating valves open to provide and maintain liquid fuel flow in the burner headers
(7) Prescribed drum water levels established in natural and forced circulation HRSGs and prescribed flow established in forced circulation and once-through HRSGs
(8) Burner elements and igniters positioned in accordance with manufacturer's specification
(9) Energy supplied to control systems and to interlocks
(10) Meters or gauges indicating fuel header pressure to the unit
(11) Instrumentation tested and functional
(12) A complete functional check of the interlocks performed after an overhaul or other interlock-related maintenance
(13) Verification of an open flow path through the HRSG system

8.8.4 Combustion Turbine Purge and Light-Off.

8.8.4.1* Combustion Turbine Purge Process. The purge of the combustion turbine shall be in accordance with the manufacturer's instructions and with the requirements of 8.8.4.2 or 8.8.4.6.

8.8.4.2 Initial Combustion Turbine Purge and Light-Off.

8.8.4.2.1 Purge Volume.

8.8.4.2.1.1 Purge prior to the light-off of the combustion turbine shall be accomplished by at least five volume changes and for a duration of not less than 5 minutes.

8.8.4.2.1.2 This volume shall be calculated based on the following:

(1) The combustion turbine operating at full load with no supplementary HRSG firing
(2) The volume from the combustion turbine inlet to the portion of the HRSG or other combustion turbine exhaust systems where the combustion turbine exhaust gas temperature is reduced to at least 56°C (100°F) below the lowest autoignition temperature of the fuel(s) for which the system has been designed

8.8.4.2.1.3 In no case shall the volume in 8.8.4.2.1.2(2) be less than the volume of the HRSG enclosure between the combustion turbine outlet and the outlet of the first evaporator section in the HRSG. For other combustion turbine exhaust systems without heat recovery, the purge volume shall extend to the stack.

8.8.4.2.2 Purge Rate.

8.8.4.2.2.1 The purge rate shall provide the required velocity in the HRSG enclosure or other combustion turbine exhaust

Copyright 2014 National Fire Protection Association (NFPA). Licensed, by agreement, for individual use and download on October 4, 2014 to LEADER and READER for designated user PATTARAPORN SRITRAKOOL. No other reproduction or transmission in any form permitted without written permission of NFPA. For inquires or to report unauthorized use, contact licensing@nfpa.org.

systems to ensure dilution and removal of combustible gases prior to turbine light-off.

8.8.4.2.2.2 The adequacy of this purge rate shall be demonstrated by one of the following methods:

(1) During the purge of the combustion turbine, a flow rate of not less than 8 percent of full-load mass airflow is provided through the HRSG or other combustion turbine exhaust systems, regardless of damper leakage or degradation in the HRSG enclosure or exhaust system.
(2)*An engineering model of the system from the outlet of the turbine to the outlet of the HRSG or other combustion turbine exhaust systems has been created, and purge adequacy has been demonstrated with flow testing performed at the equivalent purge conditions.
(3) A HRSG or other combustion turbine exhaust system burning fuel(s) of equal density and with the same ductwork and stack geometry has been installed and has a documented history of successful start-ups performed in accordance with the manufacturer's recommendations and without occurrences of uncontrolled combustion of fuel accumulations in the HRSG or other combustion turbine exhaust system during turbine light-off.
(4) Provision of combustible gas analyzers that would prevent start-up of the combustion turbine if combustible gas concentrations greater than 25 percent of the lower explosive limit (LEL) exist in the HRSG or other combustion turbine exhaust systems.

8.8.4.2.3 In the event that the combustion turbine cannot meet the requirements of 8.8.4.2.2, alternative or supplementary means to satisfy the flow requirements through the HRSG enclosure or other combustion turbine exhaust systems shall be provided.

8.8.4.2.4 Where augmented air firing is provided, a means shall be supplied for interlocking and purging the augmented air system prior to initiating and during the combustion turbine purge.

8.8.4.3 Failure to Start. On failure to start, retrial of the combustion turbine start shall be permitted following a repurge in accordance with 8.8.4.2.

8.8.4.3.1 When operating experience indicates there are problems in combustion turbine light-off, the light-off attempts shall be terminated and the cause investigated and corrected.

8.8.4.3.2 When any liquid fuel or gaseous fuel that is heavier than air is being fired, verification shall be made that the low point drains are clear of fuel.

8.8.4.3.3 The second trial to start the combustion turbine with the same or alternative fuel shall be permitted following a repurge in accordance with 8.8.4.2.

8.8.4.3.4 Subsequent trials to start the combustion turbine with the same or alternative fuel shall be permitted following a repurge in accordance with 8.8.4.2 and after proving that combustibles have been removed.

8.8.4.3.5 In the analysis for combustibles, the sampling point(s) shall be selected on the basis of the following:

(1) Fuel(s)
(2) HRSG or other combustion turbine exhaust system configuration
(3) Stratification of gases

8.8.4.4 Light-Off Airflow. After the purge has been completed, the airflow through the combustion turbine shall be permitted to be dropped below the purge rate if required by the design to accomplish combustion turbine ignition.

8.8.4.5 Loading of Combustion Turbine.

8.8.4.5.1 After successful light-off of the combustion turbine, the combustion turbine shall be brought to speed and loaded as necessary to meet system demands.

8.8.4.5.2 The loading of the combustion turbine shall be performed in accordance with the manufacturer's requirements and with any restrictions imposed by HRSG parameters.

8.8.4.6* Combustion Turbine Purge Credit. Following a combustion turbine normal shutdown, combustion turbine purge credit shall be allowed for the next start-up event provided that one of the systems described in 8.8.4.6.1 through 8.8.4.6.3 is incorporated for each combustion turbine and duct burner fuel system. In addition, a positive means to prevent leakage of ammonia into the idle HRSG or other combustion turbine exhaust system shall be provided in accordance with 4.10.3.

8.8.4.6.1* System 1 Gaseous Fuels. Triple block and double vent valve arrangement in accordance with the following requirements:

(1)*Combustion turbine normal shutdown.
(2) Fuel gas block and vent valve positions shall be continuously monitored. If continuous monitoring is lost or any valve deviates from its assigned position, purge credit is lost, and subsequent start of the combustion turbine requires a combustion turbine purge prior to light-off, in accordance with 8.8.4.2.
(3) Pressures in the two double block and vent pipe sections shall be continuously monitored. If continuous monitoring is lost or either pressure indicates leakage, purge credit is lost, and subsequent start of the combustion turbine requires a combustion turbine purge prior to light-off, in accordance with 8.8.4.2.
(4)*Prior to each start-up and following each normal shutdown, block valves shall be validated for gas leak tightness via a valve-proving system. As a minimum, the most downstream block valve shall be valve proved during the start-up sequence, and the middle block valve shall be valve proved during the shutdown sequence. The most downstream block valve shall be tested only when airflow is passing through the combustion turbine.
(5) The combustion turbine purge credit period shall not exceed 8 days (192 hours). If a combustion turbine purge in accordance with 8.8.4.2 is performed during the 8-day period, the combustion turbine purge credit is reinitiated for an 8-day period.

8.8.4.6.2* System 2 Gaseous Fuels with Pressurized Pipe Section. Triple block and double vent valve arrangement filled with an inert gas or air and maintained at a pressure that prevents gaseous fuel from entering the combustion turbine or duct burner in accordance with the following requirements:

(1)*Combustion turbine normal shutdown.
(2) Air or inert gas shall be introduced to create and maintain a pressurized pipe section between the middle and most downstream block valves.
(3) Fuel gas block and vent valve positions shall be continuously monitored. If continuous monitoring is lost or any valve deviates from its assigned position, purge credit is lost and subsequent start-up of the combustion turbine

Copyright 2014 National Fire Protection Association (NFPA). Licensed, by agreement, for individual use and download on October 4, 2014 to LEADER and READER for designated user PATTARAPORN SRITRAKOOL. No other reproduction or transmission in any form permitted without written permission of NFPA. For inquires or to report unauthorized use, contact licensing@nfpa.org.

requires a combustion turbine purge prior to light-off, in accordance with 8.8.4.2.

(4) Pressures in the two double block and vent pipe sections shall be continuously monitored. If the continuous monitoring is lost or the pressure downstream of the middle block valve decreases to less than 20.7 kPa (3 psid) above the upstream pressure, purge credit is lost and subsequent start-up of the combustion turbine requires a combustion turbine purge prior to light-off, in accordance with 8.8.4.2.

(5) Combustion turbine purge credit period is maintained as long as the conditions in 8.8.4.6.2(2), (3), and (4) are met.

(6) Provisions shall be made to ensure that fuel cannot enter the air or inert gas supply line at any time.

8.8.4.6.3* System 3 Liquid Fuels with Pressurized Pipe Section. Triple block and double drain valve arrangement filled with an inert gas or air and maintained at a pressure that prevents liquid fuel from entering the combustion turbine or duct burner in accordance with the following requirements:

(1)*Combustion turbine normal shutdown.

(2) Air or inert gas shall be introduced to create and maintain a pressurized pipe section between the middle and most downstream block valves.

(3) The liquid fuel block and drain valve positions shall be continuously monitored. If continuous monitoring is lost or any valve deviates from its assigned position, purge credit is lost and subsequent start of the combustion turbine requires a combustion turbine purge prior to light-off, in accordance with 8.8.4.2.

(4) Pressures in the two double block and drain pipe sections shall be continuously monitored. If the continuous monitoring is lost or the pressure downstream of the middle block valve decreases to less than 20.7 kPa (3 psid) above the upstream pressure, purge credit is lost and subsequent start-up of the combustion turbine requires a combustion turbine purge prior to light-off, in accordance with 8.8.4.2.

(5) The combustion turbine purge credit period is maintained as long as the conditions in 8.8.4.6.3(2), (3), and (4) are met.

(6) Provisions shall be made to ensure that fuel cannot enter the air or inert gas supply line at any time.

8.8.4.6.3.1 An inert liquid shall be permitted to be used in lieu of inert gas if acceptable to the original equipment manufacturer.

8.8.5 Duct Burner Purge and Light-Off.

8.8.5.1 The duct burner purge shall be accomplished with a flow utilizing air or combustion turbine exhaust at not less than 25 percent of full-load mass flow rate or the minimum flow necessary for operation of the duct burners, whichever is greater.

8.8.5.2 The duct burner purge shall accomplish at least eight volume changes of the HRSG enclosure, after combustion turbine exhaust flow rate has been achieved in accordance with 8.8.5.1.

8.8.5.3 Purge prior to light-off of the combustion turbine shall not be considered a duct burner purge unless the requirements of 8.8.5.1 and 8.8.5.2 have been satisfied.

8.8.5.4 Augmented Air System Purge.

8.8.5.4.1 Where augmented air firing is provided, the augmented air plenum and associated ductwork shall be purged into the HRSG enclosure.

8.8.5.4.2 This purge shall be performed in addition to the duct burner purge required in 8.8.5.2.

8.8.5.5 A duct burner trip or failure to light off duct burners successfully shall require a repurge in accordance with 8.8.5.1 and 8.8.5.2 prior to attempting a relight.

8.8.5.6 Duct Burner Purge Credit.

8.8.5.6.1 A duct burner purge shall be considered to have been achieved, provided the duct burner purge rate is maintained and all duct burner purge requirements have been satisfied.

8.8.5.6.2 The duct burner shall be permitted to be lit or a normal shutdown made provided that credit for the purge is maintained.

8.8.5.6.3 Failure of the duct burner purge rate to be maintained or failure to meet any duct burner purge requirement shall require a repurge in accordance with 8.8.5.1 and 8.8.5.2.

8.8.5.6.4 The mass flow of combustion air to the duct burner system shall be maintained at or above its purge rate and within the duct burner design operating range during all operations of the duct burner system.

8.8.5.7 Testing igniters for duct burners shall be conducted in accordance with the following:

(1) Operational tests of each igniter shall be made.

(2) The frequency of testing shall be based on the design and operation history of each individual HRSG and ignition system.

(3) The test shall be made during each start-up following an overhaul or other igniter-related maintenance.

(4) Individual igniters or groups of igniters shall be permitted to be tested while the unit is in service. Such tests shall be made with no main fuel present in the igniter's associated burner.

8.8.5.8* Starting Sequence. The operating sequences described in 8.8.5.8 shall be used for multiple element duct burners operated independently of each other.

8.8.5.8.1 For installations with a duct burner (single element or multiple element) operated as a single unit, the applicable procedures outlined in 8.8.5.8.3 shall be followed.

8.8.5.8.2 The starting sequence shall be as required in 8.8.5.8.2.1 through 8.8.5.8.2.10.

8.8.5.8.2.1 All duct burner and igniter safety shutoff valves shall be proven to be closed in accordance with 8.8.3(4).

8.8.5.8.2.2 The main fuel header and the igniter fuel header shall be pressurized up to the individual burner and igniter safety shutoff valves in accordance with established operating procedures.

8.8.5.8.2.3 The individual igniter safety shutoff valve(s) shall be opened, and the ignition transformer(s) shall be energized with the following conditions observed:

(1) If an igniter's flame is not proven within 10 seconds after its igniter safety shutoff valve has been opened, its safety shutoff valve shall be closed.

(2) The cause of failure to ignite shall be determined and corrected.

(3) With turbine exhaust flow maintained, repurge shall not be required, but at least 1 minute shall elapse before a retrial of any igniter(s) is attempted.

Copyright 2014 National Fire Protection Association (NFPA). Licensed, by agreement, for individual use and download on October 4, 2014 to LEADER and READER for designated user PATTARAPORN SRITRAKOOL. No other reproduction or transmission in any form permitted without written permission of NFPA. For inquires or to report unauthorized use, contact licensing@nfpa.org.

8.8.5.8.2.4 The main fuel control valve shall be set to and proven to be at the burner light-off position.

8.8.5.8.2.5 Where igniter flames are proven, the individual burner safety shutoff valve(s) shall be opened under the following conditions:

(1) If no burner flame is proven within 5 seconds after main fuel enters the duct, a duct burner master fuel trip shall occur.
(2) Where flame is not proven on an individual burner, that individual burner's safety shutoff valve and individual igniter safety shutoff valve shall close.
(3) The cause for failure to ignite shall be determined and corrected.
(4) At least 1 minute shall elapse before the next light-off is attempted.

8.8.5.8.2.6 After each stable burner flame is proven, the igniter shall be shut off unless classified as Class 1 or Class 2, and the stability of the burner flame shall be verified.

8.8.5.8.2.7 The associated igniter for a burner shall be used to light the burner unless the burner is specifically designed to be lit from an adjacent burner; burners shall not be lit from any hot surface.

8.8.5.8.2.8 Second or succeeding igniters shall be lit in accordance with 8.8.5.8.2.3.

8.8.5.8.2.9 Second or succeeding burners shall be lit in accordance with 8.8.5.8.2.5. The main fuel control valve shall not be modulated when second or succeeding burners are being brought into service.

8.8.5.8.2.10 After each successive burner light-off, the operator shall verify the flame stability of all operating burners.

8.8.5.8.3 Single Burner Operations.

8.8.5.8.3.1 Single burner operation shall be allowed when the burner elements have individual safety shutoff valves.

8.8.5.8.3.2 An operating procedure shall be developed to prescribe the number(s) and location(s) of burner elements allowed to be out of service as defined by the HRSG and duct burner manufacturers.

8.8.6 Normal Operation.

8.8.6.1 The combustion turbine load, exhaust flow and temperature, and duct burner firing rate shall remain within the acceptable range as determined by the HRSG manufacturer during all operating modes.

8.8.6.2 The HRSG steaming rate shall be regulated by combustion turbine loading and duct burner exhaust temperature.

8.8.6.3 The firing rate shall be regulated by varying the fuel to individual burners by means of a fuel control valve(s) or by staged firing where burners are brought in or taken out of service.

8.8.6.3.1 Individual burner safety shutoff valves shall not be used to vary the fuel rate of the burner elements.

8.8.6.3.2 All safety shutoff valves shall be fully open or completely closed.

8.8.6.4 The burner fuel shall be maintained within a range between the maximum and minimum limits specified by the burner and HRSG manufacturers or as determined by trial.

8.8.6.4.1 These trials shall test for minimum load and for stable flame as follows:

(1) With all burners in service and combustion control on automatic
(2) With different combinations of burners in service and combustion control on automatic

8.8.6.4.2 When changes occur to the minimum and maximum limits because of various burner combinations and fuel conditions, retesting shall be required.

8.8.6.5 On loss of an individual burner flame, that burner's individual safety shutoff valve and the associated igniter safety shutoff valve shall close.

8.8.7 Normal Shutdown.

8.8.7.1 Burners shall be shut down sequentially by closing the individual burner safety shutoff valves or in unison by closing all safety shutoff valves.

8.8.7.2 The duct burners shall be taken out of service with verification that the safety shutoff valves are secured in the closed position.

8.8.7.3 When the unit (combustion turbine and duct burner) is being taken out of service, the combustion turbine load shall be reduced in accordance with the manufacturer's shutdown procedures.

8.8.7.3.1 Required steam flow shall be maintained through the superheater.

8.8.7.3.2 Leakage of fuel into the unit shall be prevented.

8.8.7.4 When establishing a combustion turbine purge credit in accordance with 8.8.4.6.2, the following procedure shall be implemented prior to combustion turbine shutdown for duct burners utilizing gaseous fuels (System 2):

(1) Open both vent valves of the duct burner fuel supply.
(2) Admit the blocking medium to purge any remaining fuel until the fuel level is less than 25 percent of the LEL.
(3) Close the downstream (header) vent valve.
(4) Establish and maintain the required blocking pressure

8.8.7.5 When establishing a combustion turbine purge credit in accordance with 8.8.4.6.3, the following procedure shall be implemented prior to combustion turbine shutdown for duct burners utilizing liquid fuels (System 3) after scavenging in accordance with 8.8.2.6:

(1) Open both drain valves of the duct burner fuel supply.
(2) Admit the blocking medium to purge any remaining fuel.
(3) Close the downstream (header) drain valve.
(4) Establish and maintain the required blocking pressure.

8.8.8 Normal Hot Restart.

8.8.8.1 When a hot combustion turbine is restarted, the requirements for cold start preparation as described in 8.8.3(4) through 8.8.3(10) and 8.8.3(13) shall be followed.

8.8.8.2 The starting sequences of 8.8.4 and 8.8.5 shall be followed.

8.8.9 Duct Burner Emergency Shutdown.

8.8.9.1 A duct burner master fuel trip shall be initiated by the conditions identified in 8.7.4.3.

Copyright 2014 National Fire Protection Association (NFPA). Licensed, by agreement, for individual use and download on October 4, 2014 to LEADER and READER for designated user PATTARAPORN SRITRAKOOL. No other reproduction or transmission in any form permitted without written permission of NFPA. For inquires or to report unauthorized use, contact licensing@nfpa.org.

8.8.9.2 Gaseous Fuel.

8.8.9.2.1 A duct burner master fuel trip shall stop all fuel flow to the HRSG from all burners by tripping the main and individual burner safety shutoff valves.

8.8.9.2.2 All vent valves shall be opened.

8.8.9.2.3 The igniter safety shutoff valves and individual igniter safety shutoff valves shall be tripped and igniter sparks de-energized.

8.8.9.2.4 Duct burner master fuel trips shall operate to stop all fuel flow to the burners.

8.8.9.3 Liquid Fuel.

8.8.9.3.1 A duct burner master fuel trip shall stop all fuel flow to the HRSG from all burners by tripping the main and individual burner safety shutoff valves.

8.8.9.3.2 The igniter safety shutoff valves and individual igniter safety shutoff valves shall be tripped and igniter sparks de-energized.

8.8.9.3.3 Duct burner master fuel trips shall operate to stop all fuel flow to the burners.

8.8.9.4 The burners shall not be reignited until the initiating trip condition has been investigated and corrected and a duct burner purge has been completed.

8.9 Combustion Turbine Exhaust Bypass Systems.

8.9.1* General.

8.9.1.1 The requirements of Section 8.9 shall apply to HRSG systems equipped with HRSG isolation and bypass dampers or a diverter damper.

8.9.1.2 Because the application of dampers in HRSG systems adds to the complexity of the systems and presents hazards that cause additional safety and property damage exposures, the owner or owner's representative shall evaluate the hazards of the proposed configuration.

8.9.1.3 The owner or owner's representative shall apply safeguards to reduce the exposures identified in 8.9.1.2.

8.9.1.4 The hazard evaluation and proposed measures to reduce the hazards shall be documented and kept on file for review.

8.9.1.5 Requirements of Chapter 1 and Chapter 4 and preceding sections of Chapter 8 shall be applied, unless amended by Section 8.9 or by the hazard evaluation.

8.9.1.6 The owner or owner's representatives shall address the implications of the following hazards associated with damper applications:

(1) Due to the physical size, shape, and mass, a damper cannot be assumed to fully seal a combustion turbine exhaust gas flow path.
(2) A leaking fuel valve or a combustion turbine false start will result in an explosive mixture in the HRSG on either or both sides of a damper during shutdown periods.
(3) Failure to purge an explosive mixture prior to introduction of hot turbine exhaust gas will result in ignition of the mixture. Even at full speed and no load, the combustion turbine exhaust temperatures can be above the autoignition temperatures for combustion turbine and HRSG fuels.
(4) Systems using two stacks (HRSG and bypass), with or without dampers, tend to induce a reverse flow of fresh air through the HRSG as a result of the high temperature combustion turbine exhaust gas flow up the bypass stack.
(5) Failure of damper-operating mechanisms will allow instantaneous reversal of damper position (from open position to closed position and vice versa) due to aerodynamic effects with the following results:
   (a) Sudden closure of an operating combustion turbine free exhaust path will result in high transient duct internal pressures.
   (b) These high pressures can cause distortion of the HRSG enclosure and rupture of the duct expansion joints.
(6) Combustion turbine exhaust temperatures are high enough to ignite and sustain the basic iron fire oxidation reaction.

8.9.2 Purge.

8.9.2.1 Unfired HRSG.

8.9.2.1.1 A purge of both the HRSG enclosure and the bypass system shall be completed as required in 8.8.4 prior to the admission of combustion turbine exhaust gas into the HRSG.

8.9.2.1.2 Following the purge as required in 8.9.2.1.1, it shall be permitted to interrupt the flow through the HRSG using the bypass stack.

8.9.2.1.3 Combustion turbine exhaust flow shall be permitted to re-enter the HRSG at a later time without repurging, provided the combustion turbine has been in continuous operation with no trips or misfires.

8.9.2.1.4 Where HRSG isolation is maintained, the combustion turbine shall be permitted to purge and operate with combustion turbine exhaust through the bypass stack.

8.9.2.1.4.1 When HRSG isolation is removed, a purge of the HRSG enclosure shall be performed as required by 8.9.2.1.1.

8.9.2.1.4.2 After the purge of 8.9.2.1.4.1, an interruption as allowed by 8.9.2.1.2 shall be permitted.

8.9.2.1.4.3 In the event that HRSG isolation is disabled and the combustion turbine can continue to be operated with an exhaust temperature at least 56°C (100°F) lower than the autoignition temperature of fuels designed for use in the specific combustion turbine, the combustion turbine exhaust gas at this lower temperature shall be permitted to be used to purge the HRSG.

8.9.2.2 Fired HRSG.

8.9.2.2.1 A purge of both the HRSG enclosure and the bypass system shall be completed as required in 8.8.4 prior to the admission of combustion turbine exhaust gas into the HRSG.

8.9.2.2.2 Where HRSG isolation is continuously maintained, the combustion turbine shall be permitted to purge and operate with combustion turbine exhaust through the bypass stack.

8.9.2.2.2.1 When HRSG isolation is removed, a purge of the HRSG enclosure shall be performed as required by 8.9.2.2.1, except as permitted in 8.9.2.2.4.

8.9.2.2.2.2 In the event that the HRSG isolation is disabled and the combustion turbine can continue to be operated with an exhaust temperature at least 56°C (100°F) lower than the autoignition temperature of fuels designed for use in the specific combustion turbine and duct burner, the combustion turbine exhaust gas at this lower temperature shall be permitted to be used to purge the HRSG.

Copyright 2014 National Fire Protection Association (NFPA). Licensed, by agreement, for individual use and download on October 4, 2014 to LEADER and READER for designated user PATTARAPORN SRITRAKOOL. No other reproduction or transmission in any form permitted without written permission of NFPA. For inquires or to report unauthorized use, contact licensing@nfpa.org.

8.9.2.2.3 If damper(s) operation or other cause(s) results in the exhaust mass flow through the HRSG falling below the purge rate required in 8.8.5, a repurge as required in 8.8.5 shall be performed prior to lighting the duct burner.

8.9.2.2.4* When it is desired that the HRSG be bypassed for a period of time and then for the HRSG to be returned to service by means of damper positioning without a power interruption, one of the following conditions shall be met:

(1) A continuous flow of at least the purge rate of exhaust or fresh air shall be maintained through the HRSG when the combustion turbine is operating.
(2) The combustion turbine is in operation without trips or misfires and the duct burner fuel system satisfies the isolation requirements for a combustion turbine purge credit in accordance with 8.8.4.6.

8.9.2.3* Returning HRSG to Service. Where combustion turbine exhaust flow is to be reintroduced to the HRSG through operation of the stack diverter damper, the combustion turbine load and damper sequence of operation shall be considered by the HRSG manufacturer.

8.9.3 Dampers.

8.9.3.1 The requirements of 8.9.3 shall apply regardless of physical hardware [i.e., single-bladed diverting damper, two separate dampers (single or multiblade) for isolation or bypass service, or multiple dampers in series with seal air provision].

8.9.3.2 Damper System.

8.9.3.2.1 The bypass damper failure mode shall be determined, and the exposed system shall be capable of withstanding the resultant pressure.

8.9.3.2.2 A means shall be provided for recognizing leakage of combustion turbine exhaust gas past a closed damper and into the HRSG enclosure.

8.9.3.2.3 Where leakage is detected, the HRSG shall be purged at a temperature at least 56°C (100°F) below the autoignition temperature of the fuel before hot combustion turbine gases are allowed to enter the HRSG enclosure.

8.9.3.2.4 Where leakage results in a HRSG enclosure temperature above the temperature required to ignite and sustain an iron fire oxidation reaction *(see 8.5.5)*, safeguards shall be taken to maintain water supply to the HRSG for tube cooling.

8.9.3.2.5 When HRSG isolation or diverter dampers are utilized, duct burner liquid fuel elements shall be scavenged prior to isolation of the HRSG.

8.9.3.2.6 HRSG isolation shall be provided if either of the following operating conditions are encountered:

(1) Work within the HRSG enclosure is necessary while the combustion turbine is exhausting through the bypass stack.
(2) The HRSG is devoid of water while the combustion turbine is exhausting through the bypass stack except when the HRSG is specifically designed by the HRSG manufacturer to run dry.

8.9.3.2.7 The HRSG enclosure shall be proven free of combustible materials, or the HRSG enclosure that is downstream of the HRSG isolation damper shall be purged to meet the requirements of 8.8.4.

8.9.3.2.8 Where shutoff dampers are utilized, a means to prevent combustible fuel accumulation upstream of the damper shall be provided.

8.9.3.2.9 When HRSG isolation has been implemented, all fuel sources to the duct burner shall be secured using lockout and tag-out procedures.

8.9.3.2.10 During scheduled maintenance outages, the owner or operator shall perform the following inspections and tests:

(1) Inspect the damper system for tightness when the damper(s) is fully closed.
(2) Check the damper operating devices for correct operation.
(3) Verify correct damper system positioning by functional test during purge, start-up, and shutdown.

8.9.4 Monitoring.

8.9.4.1 In addition to the requirements in 8.7.2.3, the position of the damper(s) shall be continuously monitored.

8.9.4.2 In addition to the required alarms in 8.7.3.2, reverse flow through a HRSG (airflow from exhaust stack through a HRSG to bypass stack) shall be alarmed if the bypass damper system can be maintained in an intermediate position.

8.9.5 Interlocks.

8.9.5.1 Stack Closure Interlocks.

8.9.5.1.1 To satisfy the stack closure correct interlock *[see 8.4.2.2.1(5)]*, one of the following conditions shall be met:

(1) The bypass damper proven open and the HRSG isolation damper closed
(2) Both the HRSG isolation damper and the stack damper (if provided) proven open
(3) Diverter damper proven open to atmosphere
(4) Diverter damper proven open to HRSG and stack damper (if provided) proven open

8.9.5.1.2 To satisfy the stack closure not correct interlock *(see 8.4.2.2.3)*, either of the following conditions shall be met:

(1) The bypass damper proven closed and the HRSG isolation damper (and stack damper if provided) not proven open
(2) Where a stack damper is provided, the diverter damper proven open to HRSG and stack damper not proven open

8.9.5.1.3 Where the bypass damper, or the HRSG isolation damper and the stack closure damper, is designed to open to prevent pressurization above the design limit of the combustion turbine exhaust system, a stack closure interlock shall not be required.

8.9.5.2 A duct burner master fuel trip shall be initiated if the bypass damper (if provided) is not proven closed or if the diverter damper (if provided) is not proven fully open to the HRSG. *[See 8.7.4.3(2).]*

8.9.5.2.1 If the HRSG system is designed for duct burner operation with intermediate damper position(s), minimum exhaust flow or incorrect damper position shall be interlocked to initiate a duct burner master fuel trip.

8.9.5.2.2 This position shall be proven by a limit switch and documented during commissioning.

8.10* Combustion Turbine and HRSG with Fresh Air Firing Capability.

8.10.1* General.

8.10.1.1 Fresh air firing (with or without preheating) shall be permitted, provided that the HRSG flow path is reconfigured

Copyright 2014 National Fire Protection Association (NFPA). Licensed, by agreement, for individual use and download on October 4, 2014 to LEADER and READER for designated user PATTARAPORN SRITRAKOOL. No other reproduction or transmission in any form permitted without written permission of NFPA. For inquires or to report unauthorized use, contact licensing@nfpa.org.

with dampers and airflow is generated with either an FD fan or an ID fan.

8.10.1.2 The volume or mass airflow shall not be required to be equal to the combustion turbine exhaust flow.

8.10.1.3 The requirements of Section 8.10 shall apply to fresh air firing operation regardless of equipment configuration. The requirements of Section 8.9 shall apply except where amended in Section 8.10.

8.10.1.4* Airflow shall not be less than the minimum required for operation of the burner(s) and HRSG as specified by the manufacturers or as proven by trial.

8.10.1.5* Automatic control of fuel input shall be permitted without automatic control of the air-fuel ratio.

8.10.2 Operational Considerations.

8.10.2.1 Because of the lack of standardization of fresh air firing configurations and because of the potential for injury if the system malfunctions, each system's operational failure modes shall be analyzed and safeguards provided.

8.10.2.2 Each system's operating mode shall be evaluated to ensure safe operation during transfer from combustion turbine operation to fresh air firing mode and from fresh air firing mode to combustion turbine mode.

8.10.2.3 For fresh air firing, the owner or the owner's designated representative shall assess the following operational modes:

(1) The HRSG system with the combustion turbine in operation, with or without duct burner firing
(2) Duct burner system compliance with applicable sections of Chapter 5 or Chapter 6, with the HRSG system in the fresh air firing mode
(3) Compliance with applicable sections of Chapter 5 and Chapter 6, as well as the preceding sections of Chapter 8 when combustion turbine is exhausting through a bypass stack with the HRSG operating in the fresh air firing mode system

8.10.2.4 Fresh air firing shall not be combined with operation on combustion turbine exhaust except during periods of transition between modes.

8.10.2.4.1 The transition period between modes shall be evaluated.

8.10.2.4.2 The system designer shall incorporate design features and safeguards against the increased hazards.

8.10.2.5 When switching from turbine exhaust gas mode to fresh air firing mode automatically, the duct burner shall have been firing and stable flame established according to the previous sections of Chapter 8.

8.10.2.5.1 Immediately on a combustion turbine trip, the duct burner fuel flow control valve shall be driven to light-off position.

8.10.2.5.2 The light-off position switch must be proven within 10 seconds of a combustion turbine trip; otherwise, a duct burner master fuel trip shall be initiated.

8.10.3 Purge.

8.10.3.1 During the system start-up with combustion turbine operation, purge shall be in accordance with the requirements in 8.8.4 and 8.8.5.

8.10.3.2 Equipment used solely for the fresh air firing mode shall be isolated.

8.10.3.3 All plenums or ductwork associated with fresh air firing shall be purged into the HRSG enclosure.

8.10.3.4 During fresh air firing system start-up, a duct burner purge in accordance with 8.8.5 shall be required.

8.10.3.4.1 The combustion turbine shall be isolated to prevent reverse flow to ensure a complete purge.

8.10.3.4.2 A means of ensuring that the combustion turbine ductwork is free of combustible mixtures shall be provided.

8.10.3.5 Purge Credit During Transfer from Combustion Turbine to Fresh Air.

8.10.3.5.1 During transfer from combustion turbine operation to the fresh air firing mode, a credit for the purge shall be maintained as long as the flow rate through the HRSG enclosure is at or above the purge rate.

8.10.3.5.2 Provided the flow remains above purge rate, the duct burner shall be permitted to be shut down and immediately relit.

8.10.3.6 Purge Credit During Transfer from Fresh Air to Combustion Turbine. During transfer from the fresh air firing mode to combustion turbine operation, loss of purge credit shall require a combustion turbine purge in accordance with 8.8.4, with purge flow directed through the HRSG enclosure or bypass stack.

8.10.4 Controls, Monitoring, Alarms, and Interlocks.

8.10.4.1 In addition to the requirements of 8.7.2.3, the combustion turbine exhaust flow or airflow through the HRSG enclosure shall be monitored.

8.10.4.2 In addition to the requirements of 8.7.3, reverse combustion turbine exhaust flow or airflow through the HRSG enclosure shall be alarmed.

8.10.4.3 The following additional duct burner permissives shall be provided for fresh air firing:

(1) The damper in the correct position
(2) The fresh air fan operating
(3) Fresh airflow greater than the purge rate specified in 8.8.5

8.10.4.4 A combustion turbine trip shall cause a duct burner master fuel trip unless flow through the HRSG enclosure is maintained at or above the purge rate.

8.10.4.5 During the automatic transition from turbine exhaust gas to fresh air firing mode, all dampers shall be proven in the correct position for fresh air firing within a time limit as determined and documented during commissioning.

8.10.4.6 If a combustion turbine trip occurs and flow is at or above the purge rate, the duct burner firing rate shall be reduced to a predetermined minimum.

8.10.4.7 The system shall be reviewed to confirm that applicable portions of Chapter 5, Chapter 6, and Chapter 8 are satisfied.

8.11 Combustion Turbine Exhaust System.

8.11.1 The requirements of Section 8.11 shall apply to combustion turbine exhaust systems, either with or without emissions control systems.

8.11.2 The purge requirements of 8.8.4 shall be met.

Copyright 2014 National Fire Protection Association (NFPA). Licensed, by agreement, for individual use and download on October 4, 2014 to LEADER and READER for designated user PATTARAPORN SRITRAKOOL. No other reproduction or transmission in any form permitted without written permission of NFPA. For inquires or to report unauthorized use, contact licensing@nfpa.org.

8.11.3 Selective Catalytic Reduction (SCR) Systems.

8.11.3.1 When an SCR system is provided, the requirements of Section 4.16 shall be met.

8.11.3.2 A tempering air system shall be provided if required to meet catalyst temperature limitations.

8.11.3.2.1 A means shall be supplied for interlocking and purging the tempering air system prior to initiating, and during, the combustion turbine purge.

8.11.3.2.2 Following a combustion turbine failure to start, the tempering air system shall be repurged.

Chapter 9 Pulverized Fuel Systems

9.1 Application.

9.1.1* This chapter shall cover only those fuels with a volatile content of 8 percent or greater on a moisture-free basis.

9.1.2 This chapter shall exclude those systems that have an oxygen content greater than 21 percent, which require special attention.

9.2 Purpose.

9.2.1 The purpose of this chapter shall be to establish minimum requirements for design, installation, operation, and maintenance of pulverized fuel systems.

9.2.2 This chapter shall apply to any retrofit that involves replacement of the entire pulverized fuel system as defined in 9.4.5.1 and 9.4.5.2.

9.2.3 For less than total system replacement, components shall meet the requirements of this chapter or the original code or standard of construction.

9.3 General.

9.3.1* Functional Requirements.

9.3.1.1 Because fires and explosions are most likely to occur during start-up or shutdown or after an emergency trip, pulverized fuel systems and their components shall be designed for and capable of continuous operation.

9.3.1.2 Interruptions of pulverized fuel systems shall be kept to an absolute minimum because of the combustible and explosive nature of the pulverized fuels.

9.3.1.3 The pulverized fuel system shall be designed to meet the demands of the system that it serves over the required range of operation.

9.3.2* Hazards in Pulverized Fuel Systems. Design, operation, and maintenance of a pulverized fuel system shall address inherent hazards.

9.4 Design.

9.4.1 Introduction. General requirements for pulverized fuel systems shall be covered by this section, and specific requirements for only the more commonly used direct-fired unit systems and storage systems shall be covered in detail. *(For other types of systems, see Section 9.6.)*

9.4.2 System Arrangement Requirements.

9.4.2.1 The system arrangement shall be such that it provides only one possible direction of flow (i.e., from the points of entrance of fuel and air to the point of discharge), which can be either a furnace or a transport and collection system.

9.4.2.1.1 Means shall be provided to resist the passage of air or gas from the pulverizer through the feeder into the bunker.

9.4.2.1.2 A vertical and cylindrical column of fuel shall be sized to withstand pulverizer operating pressures, but it shall be no less than three pipe diameters.

9.4.2.1.3 The primary air or flue gas supply shall be taken from a source with a pressure that is equal to or higher than that against which fuel will be discharged from the system.

9.4.2.2 The system shall include indicators and annunciators that provide the operator with all necessary information about significant operating conditions, both normal and abnormal, throughout the system.

9.4.3 Piping Arrangement.

9.4.3.1 Piping shall be arranged to prevent hazardous accumulation of fuel.

9.4.3.2 Where the air-fuel stream is directed into multiple pipes, the system shall divide the air-fuel mixture into design ratio among various pipes.

9.4.3.3 Pipe Velocities.

9.4.3.3.1 Positive means shall be provided to ensure that all pipe velocities are equal to or above the minimum velocity required for fuel transport and to prevent flashback from the burners.

9.4.3.3.2 Testing during initial start-up and retesting as appropriate shall be performed to verify that individual pipe velocities are adequate.

9.4.3.4 All piping system components shall be capable of being cleared of pulverized fuel using transport air.

9.4.4 Inerting Arrangement.

9.4.4.1 Where an inerting system is required in accordance with 9.4.6.8, it shall be permanently installed and equipped with connections, which shall be a minimum of 25.4 mm (1 in.) in diameter.

9.4.4.2 Injection shall be controlled by readily operable valves or dampers. *(See* NFPA 69, *Standard on Explosion Prevention Systems.)*

9.4.4.3 Operation of these valves shall be accomplished at a location that is remote from the pulverized fuel system.

9.4.5 System Arrangements.

9.4.5.1 Direct-Fired Systems.

9.4.5.1.1 These systems, as shown in Figure 9.4.5.1.1(a) through Figure 9.4.5.1.1(f), shall be permitted to have the fan located either following or ahead of the pulverizer.

9.4.5.1.1.1 If auxiliary air is used, a damper shall be placed in this line.

Copyright 2014 National Fire Protection Association (NFPA). Licensed, by agreement, for individual use and download on October 4, 2014 to LEADER and READER for designated user PATTARAPORN SRITRAKOOL. No other reproduction or transmission in any form permitted without written permission of NFPA. For inquires or to report unauthorized use, contact licensing@nfpa.org.

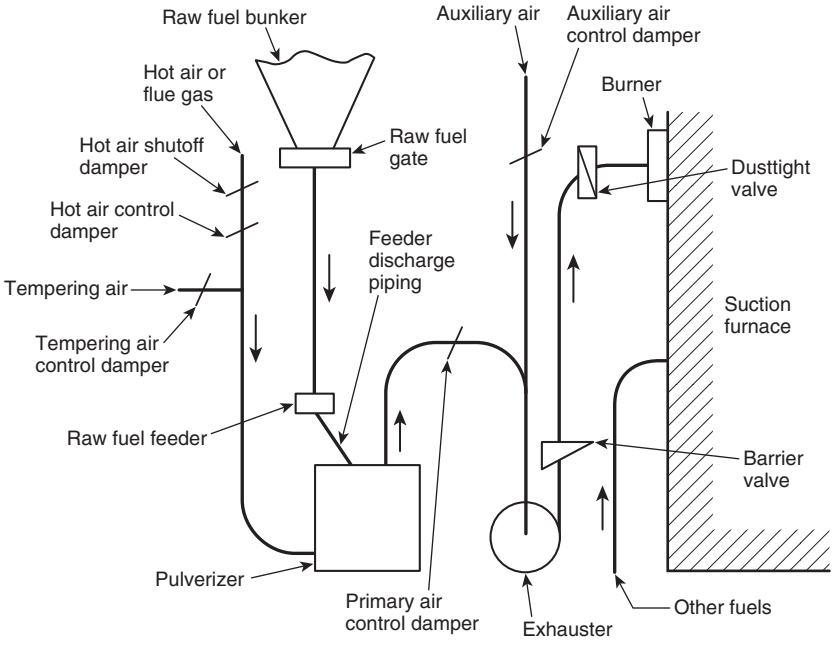

FIGURE 9.4.5.1.1(a) Direct-Firing Pulverized Fuel Exhauster System for Suction Furnace.

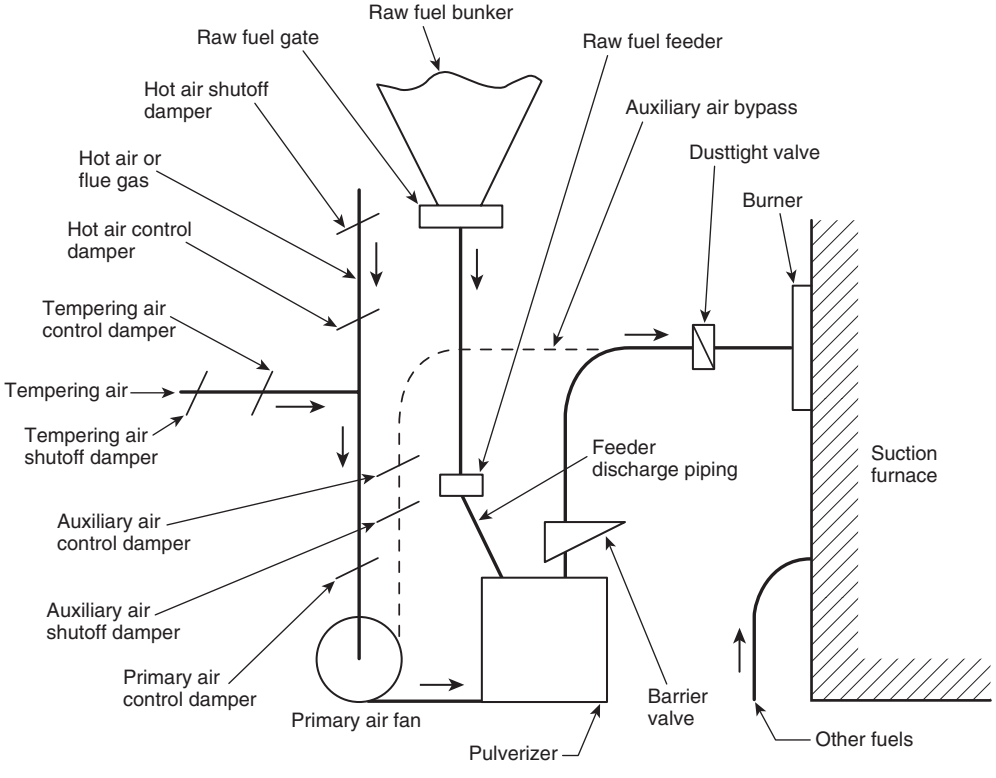

FIGURE 9.4.5.1.1(b) Direct-Firing Pulverized Fuel Hot Primary Air Fan System for Suction Furnace.

Copyright 2014 National Fire Protection Association (NFPA). Licensed, by agreement, for individual use and download on October 4, 2014 to LEADER and READER for designated user PATTARAPORN SRITRAKOOL. No other reproduction or transmission in any form permitted without written permission of NFPA. For inquires or to report unauthorized use, contact licensing@nfpa.org.

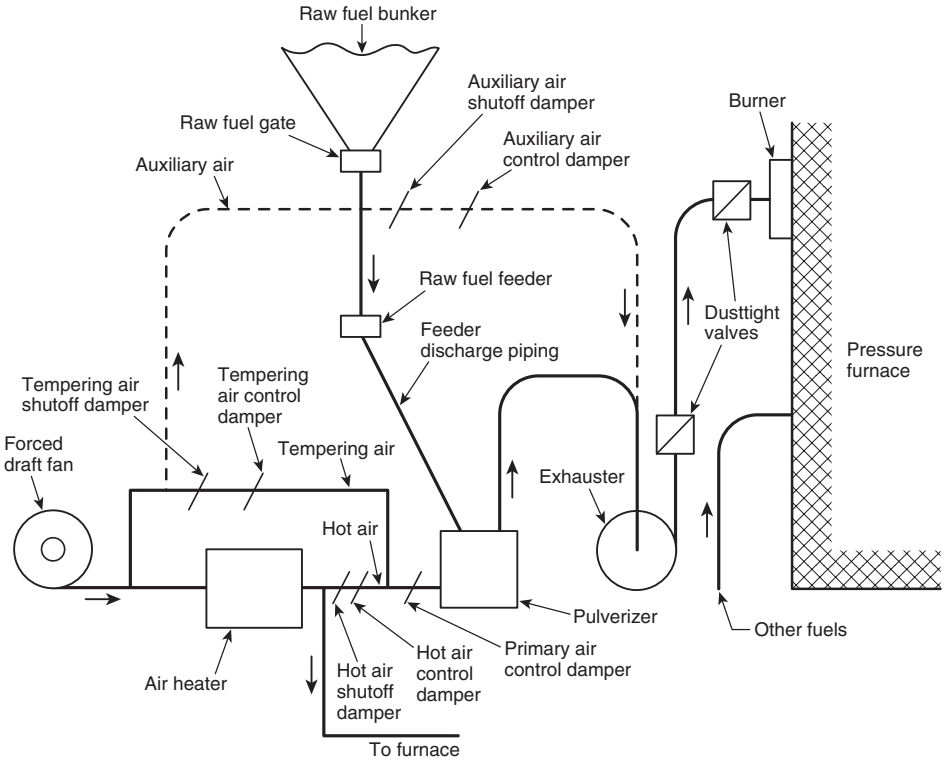

FIGURE 9.4.5.1.1(c) Direct-Firing Pulverized Fuel Exhauster System for Positive Pressure Furnace.

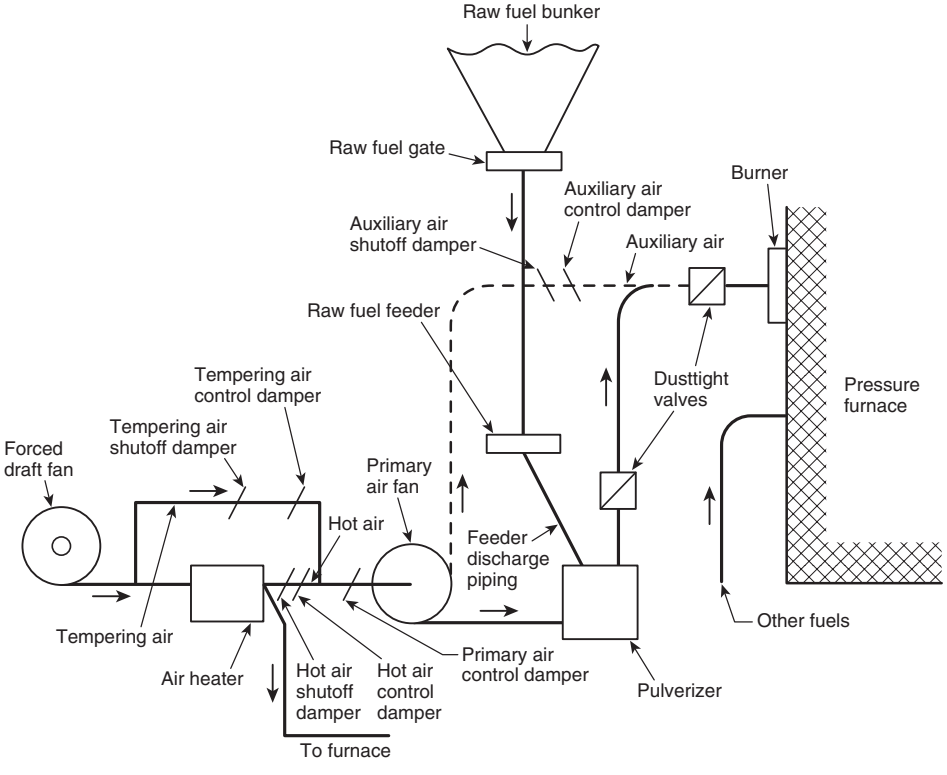

FIGURE 9.4.5.1.1(d) Direct-Firing Pulverized Fuel Hot Primary Air Fan System for Pressure Furnace.

Copyright 2014 National Fire Protection Association (NFPA). Licensed, by agreement, for individual use and download on October 4, 2014 to LEADER and READER for designated user PATTARAPORN SRITRAKOOL. No other reproduction or transmission in any form permitted without written permission of NFPA. For inquires or to report unauthorized use, contact licensing@nfpa.org.

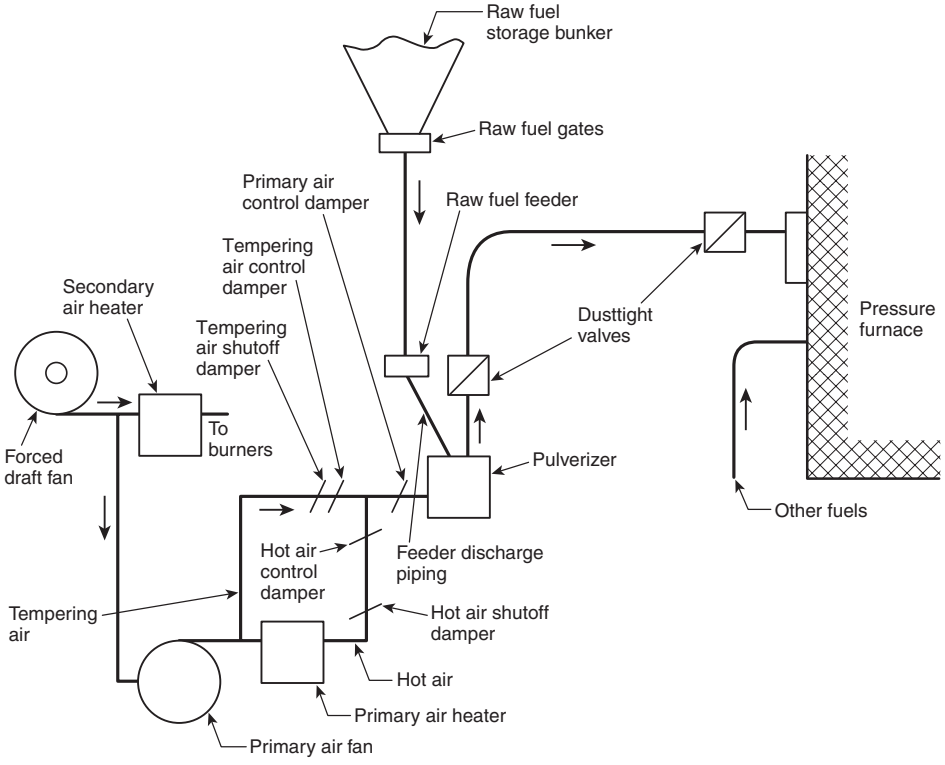

FIGURE 9.4.5.1.1(e) Direct-Firing Pulverized Fuel Cold Primary Air Fan System for Pressure Furnace.

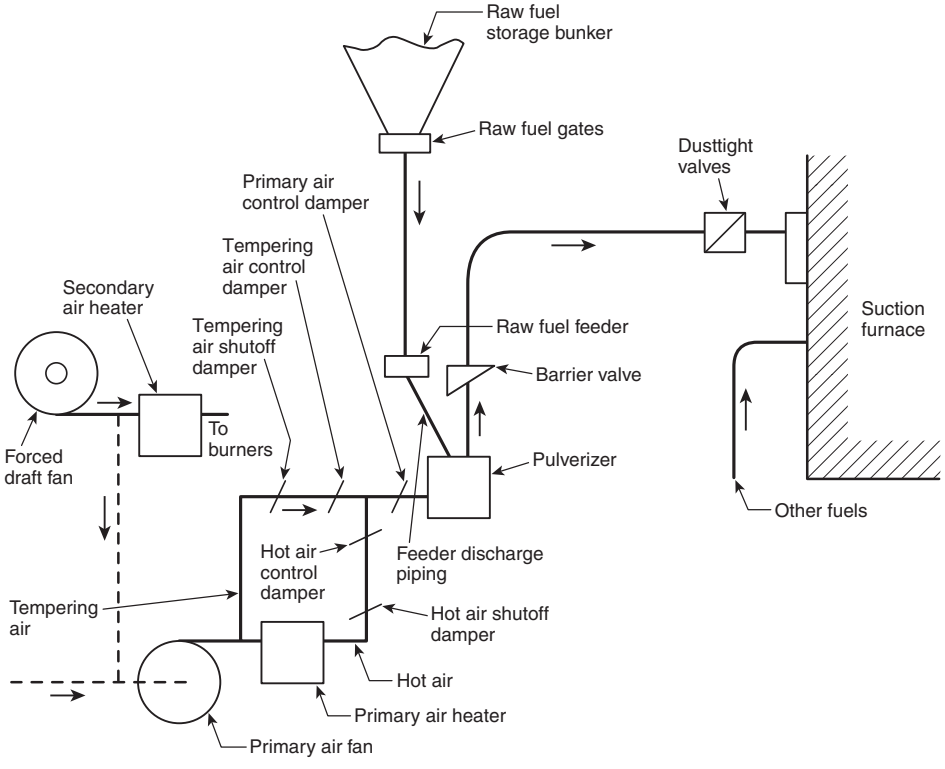

FIGURE 9.4.5.1.1(f) Direct-Firing Pulverized Fuel Cold Primary Air Fan System for Suction Furnace.

Copyright 2014 National Fire Protection Association (NFPA). Licensed, by agreement, for individual use and download on October 4, 2014 to LEADER and READER for designated user PATTARAPORN SRITRAKOOL. No other reproduction or transmission in any form permitted without written permission of NFPA. For inquires or to report unauthorized use, contact licensing@nfpa.org.

9.4.5.1.1.2 The usual direct-firing pulverized fuel system shall be permitted to comprise the following components:

(1) Raw fuel bunker
(2) Raw fuel gate
(3) Raw fuel feeder
(4) Flow control of raw fuel
(5) Feeder discharge piping
(6) Air-swept pulverizer
(7) Classifier
(8) Foreign material–collecting hopper
(9) Pulverizer air fan or exhauster
(10) Source of hot air
(11) Source of tempering air
(12) Temperature control of air
(13) Flow control of air
(14) Piping and ducts
(15) Valves
(16) Dampers
(17) Burners
(18) Means of inerting
(19) Safety interlocks and alarms

9.4.5.1.2 Valve Requirements.

9.4.5.1.2.1 For a suction furnace that can be fired by other main fuels or that is connected to two or more pulverizers or exhausters, valves, as shown in Figure 9.4.5.1.2.1 details (c), (d), (e), (f), (g), (h), and (i), shall be installed to isolate all burner lines.

(A) This requirement shall be permitted to be met with one dusttight and one barrier valve or with two dusttight valves.

(B) A dusttight valve shall be installed in the burner pipe close to the furnace.

(C) The second valve shall be installed close to the pulverizer.

(D) The valves shall be closed prior to entering a pulverizer, exhauster, or fuel piping.

9.4.5.1.2.2 For a pressure furnace that can be fired by other main fuels or that is connected to two or more pulverizers or exhausters, a dusttight valve, as shown in Figure 9.4.5.1.2.1, details (j), (k), and (l), shall be installed to isolate all burner lines.

(A) In addition, a second dusttight valve shall be installed close to the furnace.

(B) Both valves shall be closed prior to entering a pulverizer, exhauster, or fuel piping.

9.4.5.1.2.3 One of the valves in 9.4.5.1.2.1 and 9.4.5.1.2.2 shall be quick closing.

9.4.5.1.2.4 If one valve is used to isolate more than one burner line, means shall be provided to prevent circulation between those lines or burners.

9.4.5.1.2.5 Two dusttight valves or one dusttight valve and one barrier valve, as shown in Figure 9.4.5.1.2.1, details (g) and (h), shall be provided in each burner pipe if one or more pulverizers are connected to more than one suction furnace at a time.

9.4.5.1.2.6 Where one or more pulverizers, as shown in Figure 9.4.5.1.2.1, detail (l), are connected to two or more pressure furnace(s) at the same time, the valve requirements in 9.4.5.1.2.2 shall apply.

9.4.5.1.2.7 Two dusttight valves or one dusttight valve and one barrier valve, as shown in Figure 9.4.5.1.2.1, detail (i), shall be installed in the burner piping where the discharge pipes from separate exhausters or pulverizers are connected to the same burner nozzle of a suction furnace.

9.4.5.1.2.8 Two dusttight valves, as shown in Figure 9.4.5.1.2.1, detail (k), shall be installed in the burner piping where the discharge pipes from separate exhausters or pulverizers are connected to the same burner nozzle of a pressure furnace.

9.4.5.1.2.9 The valve that is located nearest the pulverizer shall be positioned so that pulverized fuel accumulations above the valve will drain into the exhauster or pulverizer when the valve is opened. Other valves shall be located so as to prevent accumulation of pulverized fuel.

9.4.5.1.2.10 Figure 9.4.5.1.1(a) through Figure 9.4.5.1.1(f); Figure 9.4.5.1.2.1, details (a) through (l); and the accompanying text illustrate and specify requirements for the usual combinations of equipment; if other combinations are used, they shall conform to the principles set forth in this code.

9.4.5.1.2.11 Unless required by the inerting system, valves shall not be required between the pulverizer and the burners for a single pulverizer or exhauster connected to one or more burners in a furnace that cannot be fired by any other main fuel, provided that the combustion air to individual burners cannot be shut off *[see Figure 9.4.5.1.2.1, details (a) and (b)]*; if combustion air can be shut off to individual burners, 9.4.5.1.2.1 and 9.4.5.1.2.2 shall apply.

9.4.5.1.3 Air Supply Isolation Requirements.

9.4.5.1.3.1 For pressurized pulverizers and suction pulverizers with pressurized air supply installations, there shall be a means for tight shutoff of the hot air supply and a means for shutting off the primary air supply to each pulverizer.

9.4.5.1.3.2 For suction pulverizer installations with an atmospheric tempering air supply, there shall be a means for shutting off the hot air supply.

9.4.5.2 Storage-Firing Systems.

9.4.5.2.1 These systems, as shown in Figure 9.4.5.2.1(a) through Figure 9.4.5.2.1(h), shall be arranged to permit partial or complete venting of the pulverizer air and water vapor after separating the pulverized fuel in cyclones or other types of dust collectors.

9.4.5.2.1.1 The separated fuel shall be transported to storage bins for subsequent supply to the burners.

9.4.5.2.1.2 In addition to the components of a direct-fired system as listed in 9.4.5.1, a typical storage system shall include some or all of the following special equipment:

(1) Dust collector
(2) Cyclone vent collector
(3) Vent fan
(4) Dust collector pressure lock
(5) Transport system from the separator, cyclone, and dust collector to the pulverized fuel bin; pulverized fuel pump; piping; and valves or mechanical conveying system
(6) Pulverized fuel bins
(7) Pulverized fuel feeders

9.4.5.2.2 Valve Requirements.

9.4.5.2.2.1 Barrier valves, as shown in Figure 9.4.5.2.1(a) and Figure 9.4.5.2.1(c) through Figure 9.4.5.2.1(h), shall be provided in the piping between the pulverized fuel feeders and the burners of a storage system that is connected to one or more burners of a suction furnace.

Copyright 2014 National Fire Protection Association (NFPA). Licensed, by agreement, for individual use and download on October 4, 2014 to LEADER and READER for designated user PATTARAPORN SRITRAKOOL. No other reproduction or transmission in any form permitted without written permission of NFPA. For inquires or to report unauthorized use, contact licensing@nfpa.org.

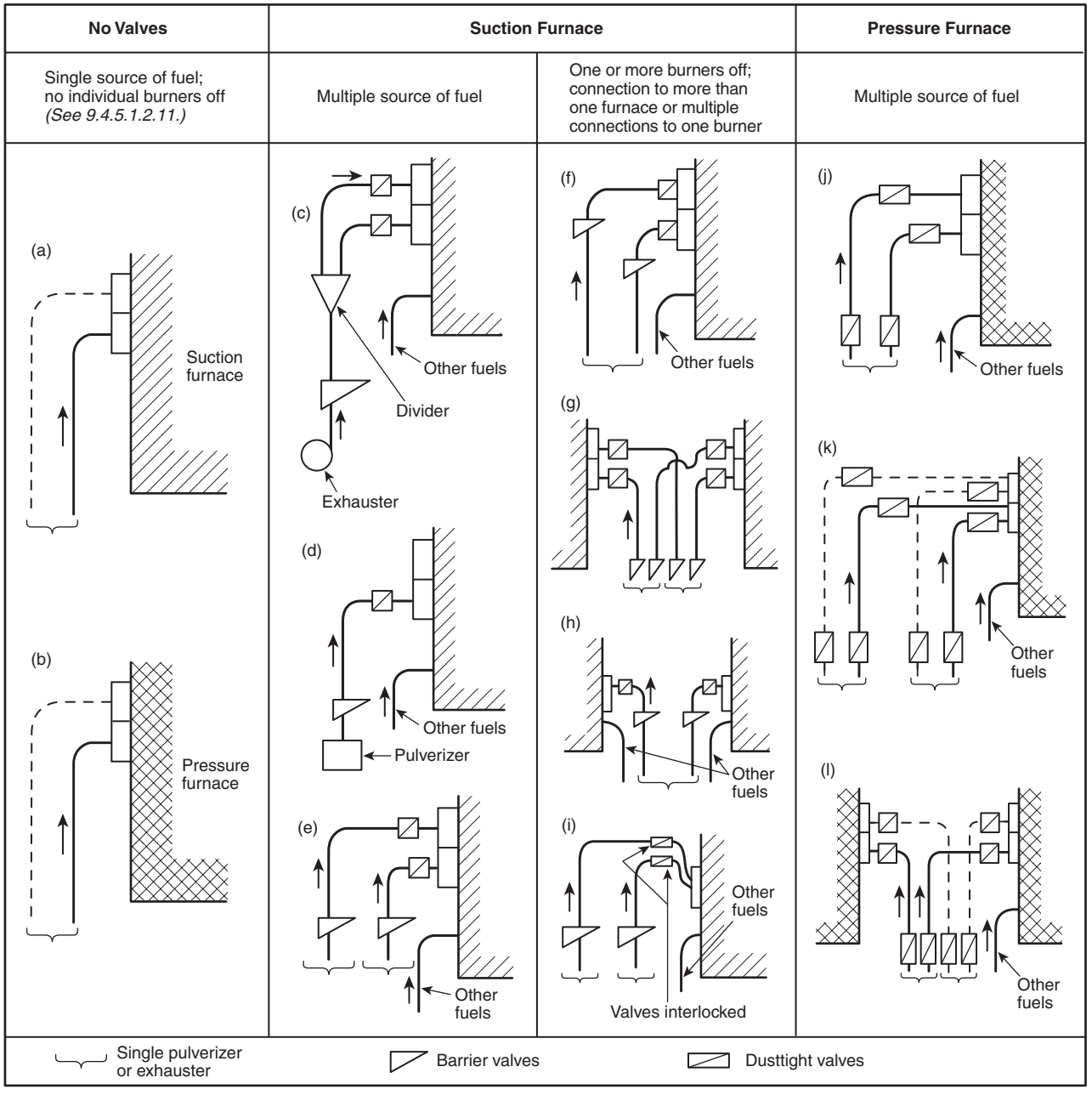

FIGURE 9.4.5.1.2.1 Direct-Firing Pulverized Fuel System's Valve Requirements in Burner Piping.

9.4.5.2.2.2 A check valve, as shown in Figure 9.4.5.2.1(c) through Figure 9.4.5.2.1(f) and Figure 9.4.5.2.1(h), shall be installed in each vent pipe connecting the cyclone or dust collector of a storage system to the primary air fan or to any portion of the furnace or stack of a suction furnace.

9.4.5.2.2.3 A dusttight valve, as shown in Figure 9.4.5.2.1(b), shall be installed in each burner pipe between the pulverized fuel feeder and the burner for a storage system that is connected to one or more burners of a pressure furnace. These valves shall not be opened until the primary air pressure is established.

9.4.5.2.2.4 A pressure lock, as shown in Figure 9.4.5.2.1(b), shall be installed at each fuel outlet of a pulverized fuel bin (if required) that is connected to a pressure furnace, to permit feeding of fuel into the burner lines at a higher pressure and to prevent the flow of primary air into the bin.

9.4.5.2.2.5 A pressure lock, as shown in Figure 9.4.5.2.1(a) and Figure 9.4.5.2.1(c) through Figure 9.4.5.2.1(h), shall be installed at each cyclone outlet if more than one cyclone is connected to a single pulverized fuel pump or if the cyclone is arranged for direct gravity discharge into the pulverized fuel

Copyright 2014 National Fire Protection Association (NFPA). Licensed, by agreement, for individual use and download on October 4, 2014 to LEADER and READER for designated user PATTARAPORN SRITRAKOOL. No other reproduction or transmission in any form permitted without written permission of NFPA. For inquires or to report unauthorized use, contact licensing@nfpa.org.

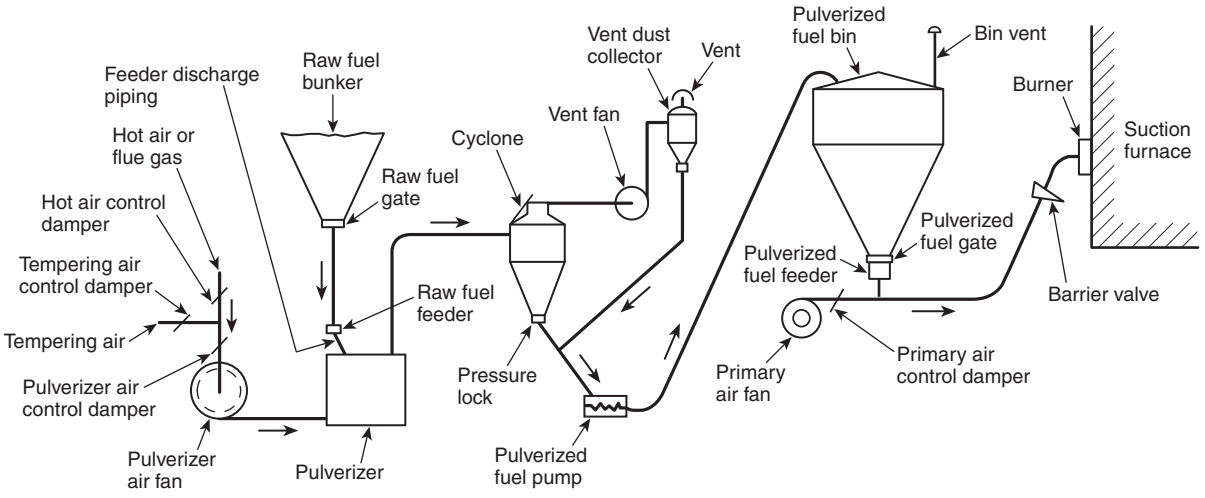

Note: Pulverizer fan or vent fan might not be required.

FIGURE 9.4.5.2.1(a) Pulverized Fuel Storage Firing System.

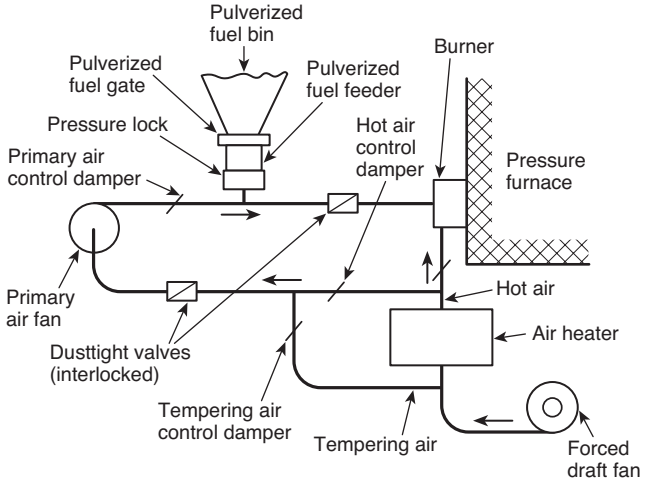

FIGURE 9.4.5.2.1(b) Pulverized Fuel Storage Firing System for Pressure Furnace.

bin. A pressure lock shall not be required at the cyclone outlet if only one cyclone is connected to the pulverized fuel pump.

9.4.5.2.3 Primary Air Connections of Pressure Furnace Firing.

9.4.5.2.3.1 For pressure furnace firing, a dusttight valve, as shown in Figure 9.4.5.2.1(e), shall be installed between the forced draft system and the inlet for the primary air fan.

9.4.5.2.3.2 A minimum stop shall be provided on the primary air control damper to prevent its being completely closed unless the shutoff dampers in the burner pipes are closed.

9.4.5.2.4 Venting.

9.4.5.2.4.1 Partial venting shall be used to control humidity in the pulverized fuel system, to minimize quantity of vented air or gas, or to conserve heat.

9.4.5.2.4.2 Total venting shall be used where there is no further use for the transport air or gas.

9.4.5.2.4.3 Both vent systems shall have the common requirements of 9.4.5.2.4.3(A) through 9.4.5.2.4.3(F).

(A) There shall be no venting to a pressure furnace.

(B) Venting to a suction furnace shall be permitted when it is delivered to a zone where combustion is active and injection line velocities are maintained at least 50 percent above the maximum flame propagation rate of the fuel.

(C) Venting to a stack, flue, or breeching shall be permitted when it is done to a zone where the temperature does not exceed two-thirds of the ignition temperature of the fuel and the design of the entire vent system is such that there will be no hazardous accumulation of combustible fuel dust.

(D) Venting to the primary air fan shall be permitted when the primary air fan is operating and the following conditions are met:

(1) A means is provided to prevent reverse flow.
(2) The primary air system can handle the total amount of air.
(3) The primary air fan is discharging to a zone of active combustion.

(E) When venting to the atmosphere, the vented air or gas shall be sufficiently clean of combustible material so as not to create fire or an explosion hazard. The vented air or gas shall not interfere with the proper operation of other systems within the area.

(F) Check valves, where required, shall be located near the source of possible reverse flow into the system.

9.4.5.2.4.4 When the vented air from the cyclone, as shown in Figure 9.4.5.2.1(a), is discharged to the atmosphere, the vent shall discharge at a height above the building roof to prevent accumulations on the roof.

9.4.5.2.4.5 When the vented air is discharged into the stack, flue, or breeching, the connection shall be made at a point where the pressure is less than that of the room in which the

Copyright 2014 National Fire Protection Association (NFPA). Licensed, by agreement, for individual use and download on October 4, 2014 to LEADER and READER for designated user PATTARAPORN SRITRAKOOL. No other reproduction or transmission in any form permitted without written permission of NFPA. For inquires or to report unauthorized use, contact licensing@nfpa.org.

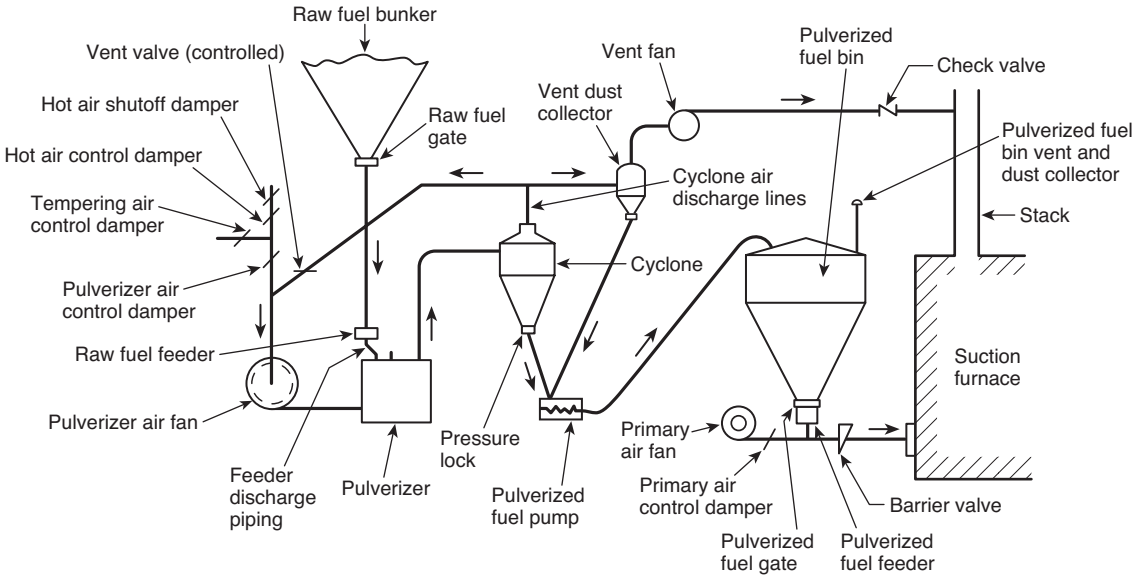

FIGURE 9.4.5.2.1(c) Pulverized Fuel Storage Firing System: Partial Recirculation — Vented Air to Stack.

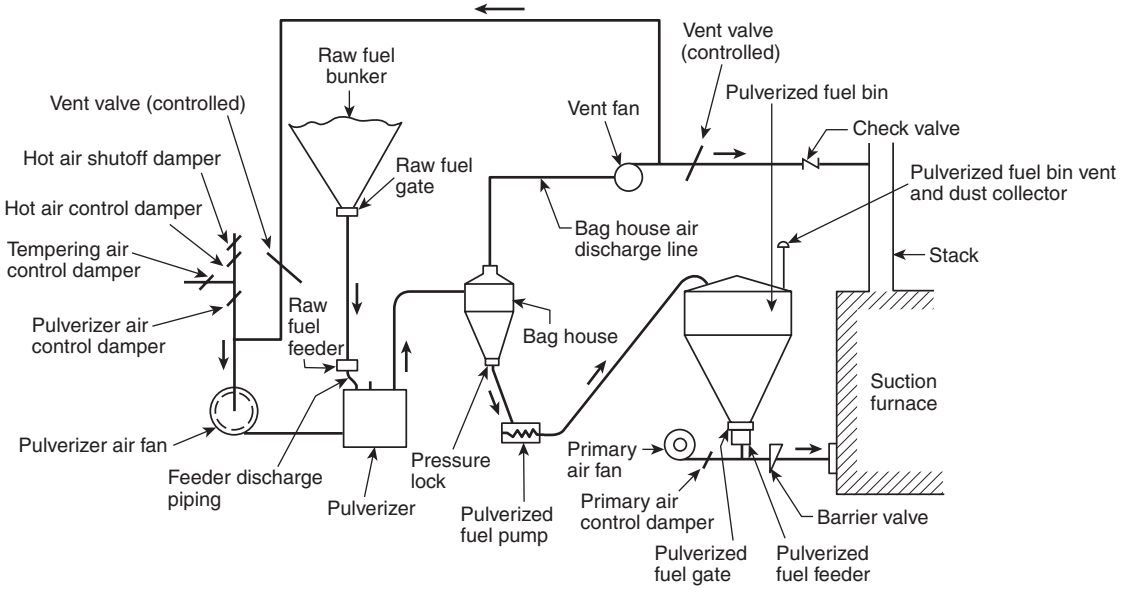

FIGURE 9.4.5.2.1(d) Pulverized Fuel Storage Firing System: Partial Recirculation — Vented Air to Stack.

pulverizer is located, and each vent line shall have a check valve that opens in the direction of the flow.

9.4.5.2.4.6 Vent connections shall be located downstream of the recirculated gas inlet connection in such a manner that any combustible dust that is carried by the vented air cannot be entrained in the recirculated gas for possible introduction into a zone of high furnace temperature.

9.4.6 Pulverizer System Component Design Requirements.

9.4.6.1 Strength of Equipment.

9.4.6.1.1 All components of the pulverized fuel system as described in 9.4.6.1.4.2 that are designed to be operated at no more than gauge pressure of 13.8 kPa (2 psi) shall be designed to withstand an internal explosion gauge pressure of 344 kPa (50 psi) for containment of possible explosion pressures.

9.4.6.1.1.1 For operating gauge pressures in excess of 13.8 kPa (2 psi), the equipment as described in 9.4.6.1.4.2 shall be designed to withstand an internal explosion pressure 3.4 times the absolute operating pressure.

9.4.6.1.2 Equipment design strength shall incorporate the combined stresses from mechanical loading, operating, and explosion and implosion pressures plus an allowance for wear, which shall be determined by agreement between the manufacturer and the purchaser.

Copyright 2014 National Fire Protection Association (NFPA). Licensed, by agreement, for individual use and download on October 4, 2014 to LEADER and READER for designated user PATTARAPORN SRITRAKOOL. No other reproduction or transmission in any form permitted without written permission of NFPA. For inquires or to report unauthorized use, contact licensing@nfpa.org.

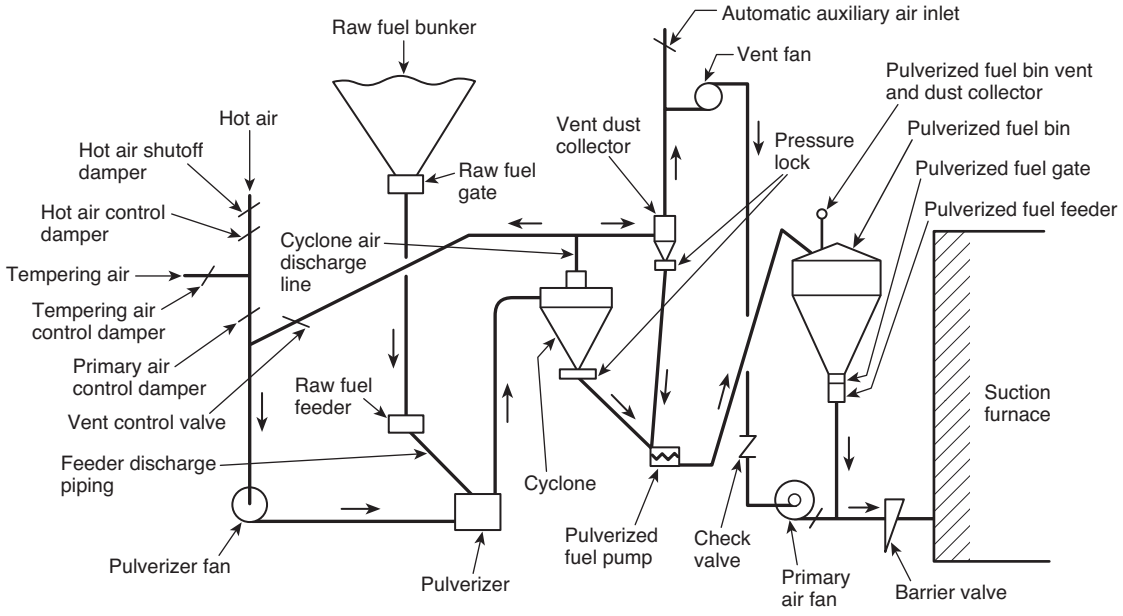

Note: Vent dust collector can be omitted.

FIGURE 9.4.5.2.1(e) Storage Firing System: Partial Recirculation — Vented Air to Primary Air Fan.

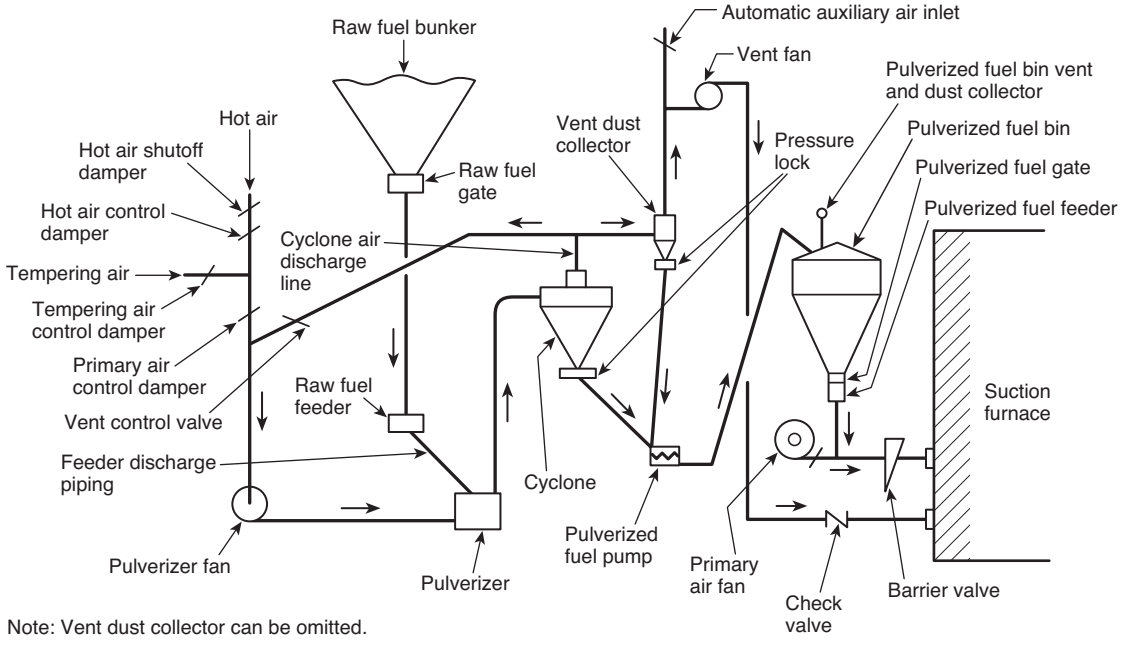

Note: Vent dust collector can be omitted.

FIGURE 9.4.5.2.1(f) Storage Firing System: Partial Recirculation — Vented Air to Furnace.

Copyright 2014 National Fire Protection Association (NFPA). Licensed, by agreement, for individual use and download on October 4, 2014 to LEADER and READER for designated user PATTARAPORN SRITRAKOOL. No other reproduction or transmission in any form permitted without written permission of NFPA. For inquires or to report unauthorized use, contact licensing@nfpa.org.

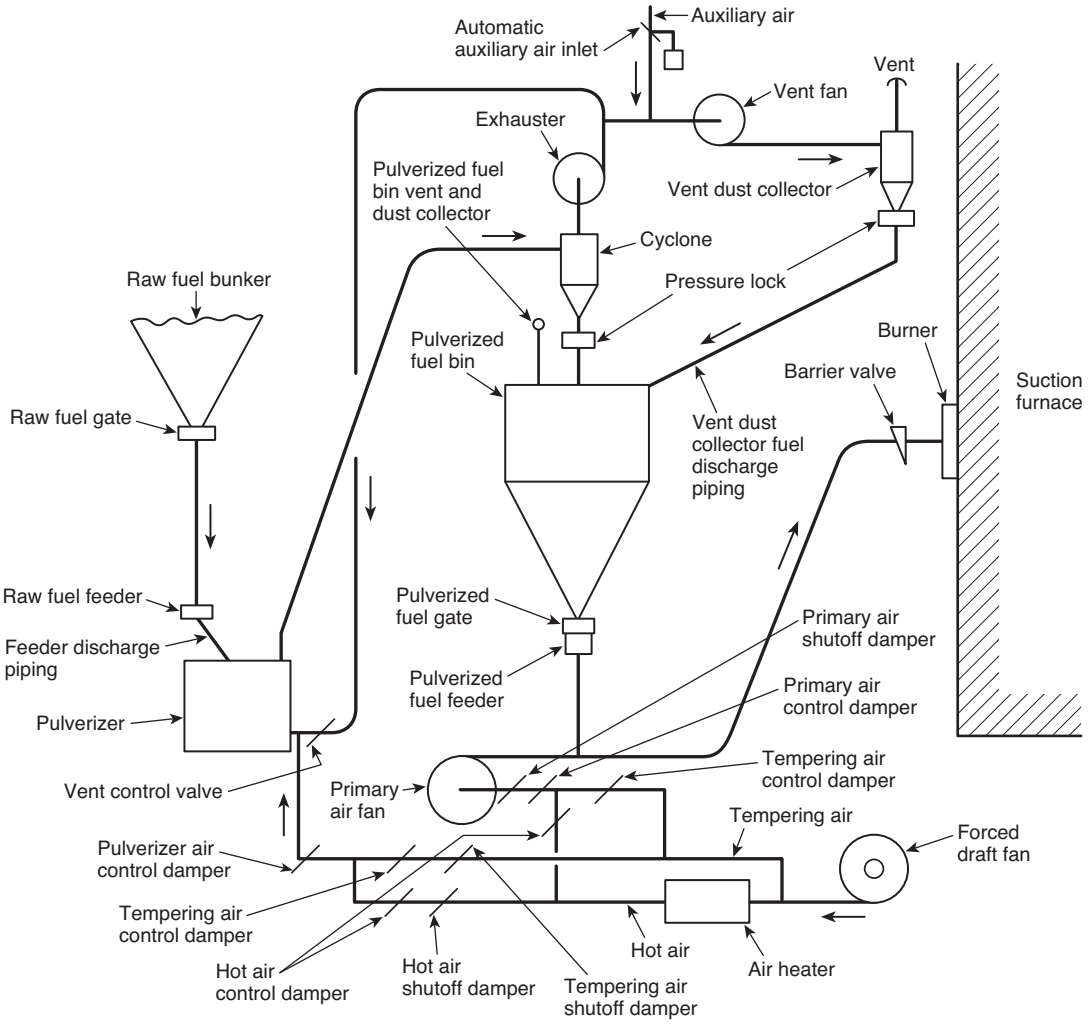

FIGURE 9.4.5.2.1(g) Storage Firing System: Partial Recirculation.

9.4.6.1.3* Shock wave pressures shall be included in the design, based on their locations in the system.

9.4.6.1.4 Components.

9.4.6.1.4.1 The components falling within the requirements of 9.4.6.1.1 through 9.4.6.1.3 for a direct-fired system shall begin at a point that is 0.61 m (2 ft) above the inlet of the raw fuel feeder, at the point of connection of ductwork to the pulverizer, and at the seal air connections to the pulverizer system, and they shall end at the discharge of the pulverizer, external classifier, or exhauster.

9.4.6.1.4.2 These components shall include the following and any associated devices:

(1) Raw fuel feeding devices, discharge hoppers, and feed pipes to the pulverizer
(2) All parts of the pulverizer that are required for containment of internal pressure
(3) Exhauster and connecting piping from the pulverizer
(4) External classifiers and connecting piping from the pulverizer
(5) Foreign material–collecting hoppers that are connected to the pulverizer

9.4.6.1.4.3 The raw fuel bunker and mechanical components, including but not limited to seals, gears, bearings, shafts, and drives, shall not be required to meet these requirements.

9.4.6.1.5 Explosion vents shall not be used on any component of the system that is described in 9.4.6.1.4.

9.4.6.1.6* All ductwork, from the hot and tempering air supply ducts to individual pulverizers, including damper frames, expansion joints, supports, and hot primary air fans, shall be designed to contain the test block capability of the pulverizer air supply fan.

9.4.6.1.7 Inert Atmosphere.

9.4.6.1.7.1 If a pulverized fuel storage system is started and operated with an inert atmosphere in all parts of the system in accordance with NFPA 69, *Standard on Explosion Prevention Systems*, the strength requirements of 9.4.6.1.1 shall not apply.

9.4.6.1.7.2 Any component of the system that is started and operated with an inert atmosphere shall not be required to comply with the strength requirements of 9.4.6.1.1.

Copyright 2014 National Fire Protection Association (NFPA). Licensed, by agreement, for individual use and download on October 4, 2014 to LEADER and READER for designated user PATTARAPORN SRITRAKOOL. No other reproduction or transmission in any form permitted without written permission of NFPA. For inquires or to report unauthorized use, contact licensing@nfpa.org.

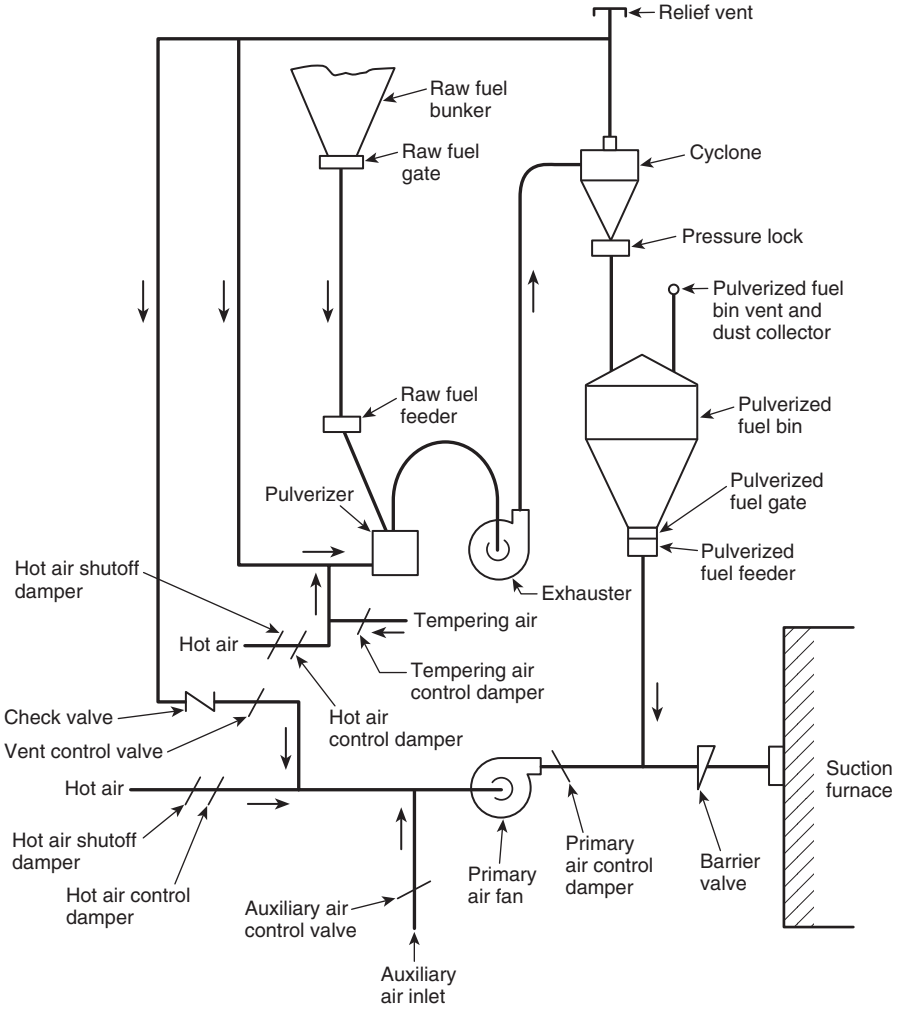

FIGURE 9.4.5.2.1(h) Storage Firing System: No Vent Fan, with Exhauster.

9.4.6.1.8 Noninert Atmosphere.

9.4.6.1.8.1 A pulverized fuel storage system that is not started and operated with an inert atmosphere in accordance with NFPA 69, *Standard on Explosion Prevention Systems*, shall meet the requirements of 9.4.6.1.1.

9.4.6.1.8.2 The components falling within these requirements shall be those described in 9.4.6.1.4, plus any or all of the following that are included in the system:

(1) Lock hoppers
(2) Circulating fans
(3) Transport systems
(4) Pulverized fuel feeders
(5) Primary air fans handling fuel-laden air
(6) Vent fans if not located downstream of a dust collector that is vented in accordance with 9.4.6.1.9

9.4.6.1.9* In a pulverized fuel storage system that is not started and operated with an inert atmosphere in accordance with NFPA 69, *Standard on Explosion Prevention Systems*, the following equipment shall meet the requirements of 9.4.6.1.1 or shall be equipped with suitable vents:

(1) Cyclone
(2) Dust collectors
(3) Pulverized fuel bins

9.4.6.1.10 Explosion vents shall not be used on the feeder or pulverizer of any system.

9.4.6.2 Piping.

9.4.6.2.1 General.

9.4.6.2.1.1 For systems that are normally operated at a gauge pressure no more than 13.8 kPa (2 psi), the pulverized fuel piping from the outlet of the equipment, as defined in 9.4.6.1.4 and 9.4.6.1.9, to the pulverized fuel burner or storage bin shall comply with 9.4.6.1.

9.4.6.2.1.2 Systems that are operated at a gauge pressure greater than 13.8 kPa (2 psi) shall be designed to withstand an internal explosion of 3.4 times the absolute operating pressure.

9.4.6.2.2 Wear.

9.4.6.2.2.1 There shall be an allowance for wear in excess of the strength requirements of 9.4.6.2.

Copyright 2014 National Fire Protection Association (NFPA). Licensed, by agreement, for individual use and download on October 4, 2014 to LEADER and READER for designated user PATTARAPORN SRITRAKOOL. No other reproduction or transmission in any form permitted without written permission of NFPA. For inquires or to report unauthorized use, contact licensing@nfpa.org.

9.4.6.2.2.2 Elbows are especially vulnerable to wear, but all parts of the system shall be designed for wear as determined by agreement between the manufacturer and the purchaser.

9.4.6.2.3 Bend Radii.

9.4.6.2.3.1 Pulverized fuel piping shall provide smooth flow and have bend radii not less than one pipe diameter.

9.4.6.2.3.2 Wherever possible, radii in excess of one pipe diameter shall be used.

9.4.6.2.4 Flexible joints and split clamp couplings shall conform to 9.4.6.2 except that the junction of two sections shall be permitted to be sealed with flexible material.

9.4.6.2.4.1 There shall be no separation of the pipe joint in case of failure of the flexible material.

9.4.6.2.4.2 Positive mechanical connections shall be provided between the two sections to prevent serious misalignment or separation.

9.4.6.2.5 At operating temperatures encountered in the service of the equipment, piping materials shall satisfy the strength requirements of 9.4.6.2 and shall comply with 9.4.6.6.2 for allowable stresses.

9.4.6.2.6 Brittle materials having a plastic elongation of less than 8 percent prior to tensile rupture shall not be used for piping except as abrasion-resistant linings and where no credit is taken for the structural strength of the lining.

9.4.6.2.7 Piping support systems shall be designed and installed in accordance with Chapter 2, Part 5, of ASME B31.1, *Power Piping*, so that combined stresses will not be in excess of those specified in 9.4.6.6.2.

9.4.6.2.8 Pipe that is lined with abrasion-resistant material shall have casing thickness and flange size that is designed for the strength requirements in 9.4.6.2 with no required allowance for wear.

9.4.6.2.9 Prior to initial operation or after piping system renovation, an in-service leak test shall be performed in accordance with the following procedure:

(1) The system shall be gradually brought up to operating pressure and temperature.
(2) The system shall be held continuously at the conditions described in 9.4.6.2.9(1) for 10 minutes.
(3) All joints and connections shall be examined for leakage.
(4) The system shall show no visual evidence of weeping or leakage.

9.4.6.3 Valves.

9.4.6.3.1 All valves in the pulverized fuel system from a point within 0.61 m (2 ft) above the inlet of the raw fuel feeder to the point of consumption of the pulverized fuel shall have construction that is capable of withstanding pressures as defined in 9.4.6.1.1, 9.4.6.2, or 9.4.6.4, depending on the application.

9.4.6.3.2 These components shall include the following and any other pulverized fuel system valves:

(1) Barrier valve
(2) Dusttight valve
(3) Check valve
(4) Pressure/air lock
(5) Raw fuel gate

9.4.6.4 Interconnections. Valves at points of interconnection between pulverized fuel system components requiring different design pressures shall comply with the strength requirements of the lower pressure of the two.

9.4.6.5 Bunker and Hopper Designs.

9.4.6.5.1 The raw fuel bunker structural material shall be made of noncombustible material and shall be designed to provide the following mass flow and self-cleaning flow characteristics:

(1) An uninterrupted flow of fuel being handled at a controlled rate
(2) A flow pattern in which arching and ratholing (piping) are avoided

9.4.6.5.1.1 The bunker outlet feeder(s) shall be coordinated with the bunker to avoid the probability that incorrect feeder selection will result in altering the bunker flow characteristics as specified in 9.4.6.5.1(1) or 9.4.6.5.1(2).

9.4.6.5.1.2 Provisions shall be made to prevent the accumulation of flammable mixtures of air, fuel dust, and combustible gases within the bunker.

9.4.6.5.2 Pulverized fuel bins shall conform to strength requirements as specified in 9.4.6.1 with exceptions as outlined in 9.4.6.1.7 and 9.4.6.1.9.

9.4.6.5.2.1 These bins shall be designed to permit fuel discharge at an uninterrupted, controlled rate.

9.4.6.5.2.2 Internal construction shall minimize stagnant deposits.

9.4.6.5.2.3 Open-top bins shall not be used.

9.4.6.5.2.4 Provisions shall be made to prevent accumulation of flammable mixtures of air, fuel dust, and combustible gases within the bin.

9.4.6.5.2.5 Bins shall be equipped with high and low level fuel detectors.

9.4.6.5.3 Pulverized fuel lock hoppers shall be designed for 3.4 times the absolute operating pressure.

9.4.6.5.3.1 Pulverized fuel lock hoppers shall be designed to permit fuel discharge at an uninterrupted controlled rate.

9.4.6.5.3.2 Internal construction shall minimize accumulations.

9.4.6.5.4 Lock hoppers shall be equipped with high and low level fuel detectors.

9.4.6.6 Construction Materials for Pressure Containment.

9.4.6.6.1 Materials that are used to meet strength requirements shall be ferrous materials and shall satisfy the strength requirements of 9.4.6.1 at design operating temperatures.

9.4.6.6.2 If made of steel or other ductile metals, the allowable stress values shall be determined as specified in 9.4.6.6.2.1 through 9.4.6.6.2.5.

9.4.6.6.2.1 Tension. The maximum allowable direct (i.e., membrane) stress shall not exceed the lesser of ¼ the ultimate strength or ⅝ the yield strength of the material.

9.4.6.6.2.2 Combined Bending and Membrane Stress (Where Bending Stresses Are Not Self-Limiting). The maximum allowable value of combined bending and membrane stress shall

Copyright 2014 National Fire Protection Association (NFPA). Licensed, by agreement, for individual use and download on October 4, 2014 to LEADER and READER for designated user PATTARAPORN SRITRAKOOL. No other reproduction or transmission in any form permitted without written permission of NFPA. For inquires or to report unauthorized use, contact licensing@nfpa.org.

not exceed the lesser of the yield strength or ½ the ultimate strength of the material.

9.4.6.6.2.3 Combined Bending and Membrane Stress (Where Bending Stresses Are Self-Limiting). The maximum allowable values of combined self-limiting and non-self-limiting bending stresses plus membrane stress shall not exceed the ultimate strength of the material.

9.4.6.6.2.4 Compressive Stress. For components in which compressive stresses occur, in addition to the requirements of 9.4.6.6.2.1 through 9.4.6.6.2.3, the critical buckling stress shall be taken into account.

9.4.6.6.2.5 Fatigue Analysis. On components subject to cyclic loading, fatigue analysis shall be made to guard against possible fatigue failures. Both mechanical and thermal loading shall be analyzed.

9.4.6.6.3 If made of cast iron or other nonductile material, the allowable stress shall not exceed ¼ the ultimate strength of the material for all parts.

9.4.6.6.3.1 When cast iron or other nonductile material is used for flat areas exceeding 0.0929 m^2 (1 ft^2), the surface shall be strengthened by ribbing or other means.

9.4.6.6.3.2 An evaluation of the possibility of buckling and fatigue failures shall be made.

9.4.6.6.4 To ensure casting quality, nondestructive examination shall be made to detect significant defects at locations of high stress, at abrupt changes of section, and at sharp angles.

9.4.6.6.4.1 The choice of such a quality assurance program shall be the responsibility of the designer.

9.4.6.6.5 The justification of new materials or improved analytical methods shall be the responsibility of the designer.

9.4.6.6.5.1 If such materials and methods are used for the design of pulverized fuel system components, they shall meet the requirements of 9.4.6.1 and 9.4.6.2.

9.4.6.6.5.2 The materials that are used shall be capable of withstanding the conditions that could occur during abnormal incidents, such as pulverized fuel fires.

9.4.6.7 Electrical Equipment.

9.4.6.7.1 All electrical equipment and wiring shall conform to *NFPA 70, National Electrical Code*.

9.4.6.7.2 Locations where completely dusttight pulverized fuel systems are installed in compliance with this code shall not be considered a hazardous location for electrical equipment as defined in *NFPA 70, National Electrical Code*.

9.4.6.8 Inerting System.

9.4.6.8.1 Pulverizers and pulverized fuel storage systems shall be equipped with an inerting system that is capable of maintaining an inert atmosphere as required to meet the provisions of 9.5.4.2.1. *(See also NFPA 69, Standard on Explosion Prevention Systems.)*

9.4.6.8.2 Provisions shall be made for verification of flow of inerting media when the system is activated.

9.4.6.9 Fire-Extinguishing System.

9.4.6.9.1 Connections.

9.4.6.9.1.1 Pulverizers and pulverized fuel–collecting systems shall be equipped with connections for fire extinguishing.

9.4.6.9.1.2 These connections shall be at least 25 mm (1 in.) in diameter and shall be adequate to pass the amount of required extinguishing material.

9.4.6.9.2 Provisions shall be made for verification of flow of fire-extinguishing media when the system is activated.

9.4.7 Safety Interlock Systems.

9.4.7.1 The safety interlocks required in this section shall be coordinated with the boiler, furnace, or other related devices to which the pulverized fuel system is connected.

9.4.7.2 Permissive Sequential-Starting Interlocks.

9.4.7.2.1 Permissive sequential-starting interlocks for direct-fired systems shall be arranged so that, after furnace or other connected apparatus interlocks have been satisfied, the pulverizer can be started only in the following sequence:

(1) Start ignition system in accordance with Chapter 6.
(2) Start primary air fan or exhauster.
(3) Establish minimum airflow.
(4) Start pulverizer.
(5) Start raw fuel feeder.

9.4.7.2.2 The actions of 9.4.7.2.1(2) and 9.4.7.2.1(4) shall be permitted to be simultaneous.

9.4.7.3 Trip Sequence of Interlocks.

9.4.7.3.1 Interlocks for direct-fired pulverized fuel systems shall be arranged to trip in the following sequence:

(1) Failure of primary airflow to below manufacturer's minimum shall trip the pulverizer and burner shutoff valve or equivalent and the feeder. The manufacturer's requirements regarding the burner's shutoff valve operation shall be followed.
(2) Failure of pulverizer shall trip the feeder and primary airflow.
(3) Closure of all fuel line valves shall trip the pulverizer, primary airflow, and raw fuel feed.
(4) Failure of the feeder shall initiate an alarm; restarting of the feeder shall be blocked until feeder start-up conditions are re-established.

9.4.7.3.2 Means to indicate loss of fuel feed to the pulverizer or fuel input to the furnace shall be installed.

9.4.7.4 Permissive Sequential-Starting Interlocks.

9.4.7.4.1 Permissive sequential-starting interlocks for pulverized fuel storage systems shall be arranged so that the system components can be started only in the following sequence:

(1) Start pulverized fuel pump or conveyor.
(2) Start cyclone and dust collector pressure locks.
(3) Start vent fan.
(4) Start pulverizer exhauster or air fan.
(5) Start pulverizer.
(6) Start raw fuel feeder.

9.4.7.4.2 The actions of 9.4.7.4.1(4) and 9.4.7.4.1(5) shall be permitted to be simultaneous.

9.4.7.5 Interlocks for pulverizers of storage systems shall be arranged to trip as follows:

(1) The full pulverized fuel bin shall trip the fuel pump or conveyor and the raw fuel feeder.

Copyright 2014 National Fire Protection Association (NFPA). Licensed, by agreement, for individual use and download on October 4, 2014 to LEADER and READER for designated user PATTARAPORN SRITRAKOOL. No other reproduction or transmission in any form permitted without written permission of NFPA. For inquires or to report unauthorized use, contact licensing@nfpa.org.

(2) Failure of the fuel pump or conveyor shall trip the vent fan on the cyclone or dust collector and pressure locks upstream of the fuel pump or conveyor.
(3) Failure of the vent fan shall trip the pulverizer exhauster or air fan.
(4) Failure of the pulverizer exhauster or air fan shall trip the raw fuel feeder.
(5) Failure of the pulverizer shall trip the raw fuel feeder.

9.4.7.6 For pressure furnaces that are firing from storage or semistorage systems, the dusttight valve in the burner pipe that is after the pulverized fuel feeder shall be interlocked so that it cannot be opened unless the dusttight damper in the primary air supply is open.

9.5 Operation.

9.5.1 Operation of All Pulverized Fuel Systems.

9.5.1.1 Preparation for Starting.

9.5.1.1.1 Preparation for every start-up shall include checks for the following conditions:

(1) The pulverizer system sealing air, if required, is in service.
(2) Energy is supplied to the control system and to the safety interlocks.
(3) All pulverizer system gates, valves, and dampers are in start-up positions.

9.5.1.1.2 After maintenance or outage, the following inspections and checks shall be made:

(1) Pulverizers, ducts, and fuel piping are in good repair and free from foreign material.
(2) Pulverizers, ducts, and fuel piping are evacuated by all personnel, all access and inspection doors are closed, and all personnel protection devices are reinstalled.
(3) All pulverizer air or flue gas dampers are operated through the full operating range.
(4) Pulverizers, feeders, controls, and associated equipment are in a condition ready for service.
(5) A complete functional check is made of all safety interlocks.

9.5.2 Operation of Direct-Fired Systems.

9.5.2.1 Starting Sequence. The starting sequence shall consist of all of the following steps:

(1) Start all necessary light-off equipment in accordance with Chapter 6 requirements.
(2) Open the pulverizer tempering air damper.
(3) Start the primary air fan or exhauster, if driven separately from the pulverizer.
(4) Open the primary airflow control damper to a setting that provides a burner line transport velocity greater than or equal to the established minimum.
(5) Open the pulverizer burner line valves.
(6) Start the pulverizer.
(7) Open the pulverizer hot air damper and maintain pulverizer outlet temperature within the specified range (as dictated by the system designer or field tests).
(8) Start the raw fuel feeder.
(9) Place the pulverizer outlet temperature, primary airflow, and raw fuel feed controls on automatic.

9.5.2.1.1 It shall be permitted to vary the sequence of the steps in 9.5.2.1(2) through 9.5.2.1(9) as recommended by the system designer.

9.5.2.2* Normal Operation.

9.5.2.2.1 The output of the pulverizer shall be regulated by adjusting its fuel and air supplies in accordance with the manufacturer's procedures or as determined by field tests.

9.5.2.2.2 Individual Burner Shutoff Valves.

9.5.2.2.2.1 Individual burner shutoff valves, if provided, shall be wide open or completely closed.

9.5.2.2.2.2 Individual burner shutoff valves shall not be placed at intermediate settings.

9.5.2.2.3* Burner line transport velocities shall be maintained at or above minimum for all pulverizer loading conditions.

9.5.2.2.4 A pulverizer shall not be operated below its minimum air or fuel stop setting.

9.5.2.3 Normal Shutdown. The pulverizer shutdown sequence shall consist of all of the following steps:

(1) Reduce pulverizer output and establish required combustion system conditions for shutdown as required in Chapter 6.
(2) Reduce the hot air and increase the cold air to cool the pulverizer to a predetermined minimum outlet temperature as recommended by the system designer or as determined by test.
(3) When the pulverizer is cooled, stop the feeder and continue operation of the pulverizer with the minimum established airflow to remove all fuel from the pulverizer and burner lines. Maintain minimum outlet temperature (typically requires shutoff of hot air supply when feeder is stopped).
(4) Shut the pulverizer down after a predetermined time as required to empty the pulverizer as determined by field tests.
(5) Position burner line shutoff valves in accordance with the manufacturer's instructions.
(6) Stop primary air flow.

9.5.2.3.1 It shall be permitted to vary the sequence of the steps in 9.5.2.3(1) through 9.5.2.3(6) as recommended by the system designer.

9.5.3 Operation of Storage Systems.

9.5.3.1 Operation of Fuel-Burning Equipment.

9.5.3.1.1 Starting Sequence. The starting sequence shall be as follows:

(1) Coordinate the fuel-burning portion with the furnace in accordance with Chapter 6.
(2) Start the primary air fan(s).
(3) Open all burner and primary air shutoff valves for the burners to be started.
(4) Open the pulverized fuel gate and start the pulverized fuel feeder for these burners.

9.5.3.1.2 Normal Operation.

9.5.3.1.2.1 Individual Burner Valves.

(A) Individual burner valves shall be wide open or completely closed.

(B) Individual burner valves shall not be placed at intermediate settings.

9.5.3.1.2.2 Fuel flow shall be controlled by adjusting the pulverized fuel feeder speed.

Copyright 2014 National Fire Protection Association (NFPA). Licensed, by agreement, for individual use and download on October 4, 2014 to LEADER and READER for designated user PATTARAPORN SRITRAKOOL. No other reproduction or transmission in any form permitted without written permission of NFPA. For inquires or to report unauthorized use, contact licensing@nfpa.org.

9.5.3.1.2.3 Primary airflow shall be maintained at all times to prevent settling of coal dust in burner pipes.

9.5.3.1.3 Normal Shutdown. The shutdown sequence shall be as follows and in accordance with Chapter 6:

(1) Establish the required combustion system conditions for shutdown.
(2) Stop the pulverized fuel feeder.
(3) When the burner flame is extinguished, close the burner and primary air shutoff valves, unless primary air valves supply air to all burners during operation.
(4) Stop the primary air fan after the last burner that is served by that fan is shut down.

9.5.3.2 Operation of Pulverizing Equipment of Storage Systems.

9.5.3.2.1 Starting Sequence.

9.5.3.2.1.1 The basic principle that shall be followed is that of starting equipment in sequence from the storage bin "upstream" toward the point of pulverizer air supply and then finally the raw fuel supply, as shown in Figure 9.4.5.2.1(a) through Figure 9.4.5.2.1(h).

9.5.3.2.1.2 The starting sequence shall be as follows:

(1) Start the pulverized fuel pump or conveyor, if provided.
(2) Start the cyclone pressure lock, if provided.
(3) Start the cyclone or dust collector vent fan or exhauster and/or the primary air fan and open the burner and primary air shutoff valves if used to convey the vent stream and burners are not in service, in accordance with 9.4.5.2.4.
(4) Start the pulverizer exhauster or fan and adjust the control dampers to obtain proper air flow and temperature.
(5) Start the pulverizer.
(6) Start the raw fuel feeder.
(7) Readjust the control damper(s) to obtain required pulverizer air-fuel outlet temperature and airflow.

9.5.3.2.2 Normal Shutdown. The shutdown sequence shall be as follows:

(1) Close the hot air damper and open the cold air damper or flue gas damper to cool down the pulverizer.
(2) Stop the raw fuel feeder.
(3) Operate the pulverizer for a predetermined time as required to empty the pulverizer of fuel and make it cool. Stop the pulverizer.
(4) Stop the pulverizer exhauster or fan.
(5) Stop the cyclone and dust collector vent fan or exhauster and/or the primary air fan if used to convey the vent stream and all burners are shut down.
(6) Stop cyclone pressure lock.
(7) Stop pulverized fuel pump or conveyor.

9.5.4 Abnormal Pulverizer System Conditions.

9.5.4.1 When a fire is suspected in the pulverizer system or abnormal operating conditions are encountered, all personnel shall be cleared from the area near the pulverizer, primary air duct, burner pipes, burners and feeder, or other pulverized fuel system components before the operating conditions are changed.

9.5.4.2 Pulverizer Tripping.

9.5.4.2.1 Inerting.

9.5.4.2.1.1 A pulverizer that is tripped under load shall be inerted and maintained under an inert atmosphere until confirmation that no burning or smoldering fuel exists in the pulverizer or the fuel is removed.

9.5.4.2.1.2 Inerting Procedure.

(A) The inerting procedure shall be established by the pulverizer equipment manufacturer and the purchaser.

(B) The pulverizer equipment manufacturer and purchaser shall consider fuel characteristics, the pulverizer temperature and size, and arrangement of the pulverizer.

9.5.4.2.1.3 Inerting media shall be selected from, but not limited to, the following:

(1) Carbon dioxide
(2) Steam
(3) Nitrogen

9.5.4.2.2 Fuel-Clearing Procedures.

9.5.4.2.2.1 For pulverizers that are tripped and inerted while containing a charge of fuel in accordance with 9.5.4.2.1.1, one of the following procedures shall be used to clear fuel from the pulverizers and sweep the transport lines clean as soon as possible after the trip and there is confirmation that there is no burning or smoldering fuel:

(1) Clear one pulverizer at a time under inert conditions into the furnace using the following procedure:
   (a) Isolate from the furnace all shutdown or tripped pulverizers.
   (b) Start up one pulverizer in accordance with the principles and sequences listed in 9.5.2.1(1) through 9.5.2.1(9).
   (c) Continue to operate the pulverizer until empty and in normal condition for shutdown. When the operating pulverizer is empty of fuel, proceed to another tripped and inerted pulverizer and repeat the procedure until all are cleared of fuel.

Exception: An exception to 9.5.4.2.2.1(1)(c) is to restart the feeder and return the pulverizer to normal operation if furnace conditions allow such operation.

(2) Clear one pulverizer at a time under inert conditions through the pyrites removal system using the following procedure:
   (a) Remove fuel through the pyrites removal system using operation of the pulverizer motor as necessary.
   (b) Start the pulverizer with an inert medium, using the starting sequences in 9.5.2.1(1) through 9.5.2.1(9).

9.5.4.2.2.2 Burning Fuel in Out-of-Service Pulverizer.

(A) In the event that there are indications of burning or smoldering fuel in an out-of-service pulverizer, the pulverizer shall not be restarted under the normal procedure.

(B) Fire-extinguishing procedures shall be followed, or removal of residual fuel shall be accomplished under inert conditions by taking one of the following steps:

(1) Remove fuel through the pyrites removal system. When this procedure is followed, the pulverizer shall be opened and inspected prior to restarting.
(2) Start the pulverizer with an inert medium, using the starting sequences in 9.5.2.1(1) through 9.5.2.1(9).

(C) Due to the danger of an explosion when they are being opened and cleaned, pulverizers shall not be cleaned manu-

Copyright 2014 National Fire Protection Association (NFPA). Licensed, by agreement, for individual use and download on October 4, 2014 to LEADER and READER for designated user PATTARAPORN SRITRAKOOL. No other reproduction or transmission in any form permitted without written permission of NFPA. For inquires or to report unauthorized use, contact licensing@nfpa.org.

ally until they and their contents have been cooled to ambient temperature.

(D) The procedures of 9.5.4.3 shall be followed.

9.5.4.3 Fires in Pulverized Fuel Systems.

9.5.4.3.1 Indication of a fire in any part of a pulverized fuel system is a serious condition and shall be dealt with promptly.

9.5.4.3.2 Extinguishing media shall be water or inert solids or shall be in accordance with 9.5.4.2.1.3.

9.5.4.3.3 The following procedures for fighting fires shall be used, with modifications for specific systems, specific locations of fire, or requirements of the equipment manufacturer:

(1) If sufficient flow capacity of inerting media is provided (at least 50 percent by volume of the minimum primary airflow for the system), inert the pulverizer air-fuel flow, shut off the fuel feed, empty the pulverizer of fuel, and shut down and isolate the pulverizer.
(2) Stop the primary airflow, trip the pulverizer and feeder, isolate the system, inert, and proceed as follows:
   (a) Do not disturb any accumulation of dust in the pulverizing equipment.
   (b) Do not open any access doors to the pulverizer until the fire is extinguished and all temperatures have returned to ambient.
   (c) After isolation of the pulverizer is verified, follow the procedures as outlined in 9.5.4.3.6 and 9.5.4.3.7.
(3) Extinguish a fire that is detected in an operating low storage pulverizer by shutting off the hot air, increasing the raw fuel feed as much as possible without overloading the pulverizer, and continuing to operate with tempering air.
(4) Introduce water into the raw fuel or tempering air stream, or both, and proceed as follows:
   (a) The water must be added in such quantities and at such locations as not to cause hang-up or interruption of raw fuel feed or to stir up any deposit of combustible material.
   (b) When all evidence of fire has disappeared, shut off the water, trip the pulverizer, isolate, and inert.

9.5.4.3.4 When fires are detected in other parts of a direct-fired system, such as burner lines, the procedures as outlined in 9.5.4.3.3(1), (2), or (3) shall be followed.

9.5.4.3.5 When fires are detected in storage system components, including but not limited to cyclones, dust collectors, and pulverized fuel bins, the affected components shall be isolated and inerted.

9.5.4.3.6 If fire is detected in an out-of-service pulverizer, it shall be kept out of service and isolated.

9.5.4.3.6.1 All air supply to the pulverizer shall be shut off.

9.5.4.3.6.2 Access doors to a pulverizer shall not be opened until the fire is extinguished by water or other extinguishing media and all temperatures have returned to ambient.

9.5.4.3.7 Pulverizing equipment shall be inspected internally following fires in pulverizing systems.

9.5.4.3.7.1 All coke formations and other accumulations shall be removed to reduce the potential for future fires.

9.5.4.3.7.2 If the pulverizer is wet, it shall be dried.

9.5.4.3.7.3 In no case shall a compressed air jet be used.

9.5.4.3.7.4 All components shall be inspected, and damaged items, including but not limited to gaskets, seals, lubricants, and liners, shall be replaced.

9.6 Special Systems.

9.6.1 Introduction. Specific systems, as defined in this section, shall meet the specific requirements of this section. *(For general design, operating, and safety requirements of these systems, see Sections 9.4 and 9.5.)*

9.6.2 Semi-Direct-Firing System.

9.6.2.1 Description. This system, as shown in Figure 9.6.2.1(a) and Figure 9.6.2.1(b), shall consist of an air-swept pulverizer located near the point of use.

9.6.2.1.1 The fuel shall be separated from the air in a cyclone or other type of dust collector.

9.6.2.1.2 Fuel shall discharge from the cyclone through a rotary valve and shall be picked up by air from a primary air fan and blown into the furnace.

9.6.2.1.3 The primary air fan shall take suction from the pulverizer air fan or from other sources.

9.6.2.1.4 If the primary air fan does not utilize all of the pulverizer air, a vent fan shall be required.

9.6.2.2 System Arrangement. This system shall be permitted to include the following special equipment:

(1) Cyclone separator or other type of dust collector
(2) Pressure lock
(3) Primary air fan
(4) Vent fan and dust collector, if required
(5) Pulverized fuel pickup

9.6.2.3 Valve Requirements.

9.6.2.3.1 A barrier valve and a dusttight valve shall be installed between each fuel pickup point and the burner for a suction furnace that can be fired by other fuels.

9.6.2.3.2 Two dusttight valves shall be installed between the fuel pickup point and the burner for a pressurized furnace if the furnace can be fired by other fuels.

9.6.2.3.3 One of the valves described in 9.6.2.3.1 and 9.6.2.3.2 shall be quick closing.

9.6.2.3.4 Valves shall not be required between the pulverizer and the cyclone.

9.6.2.4 Isolation Requirements. Isolation requirements shall be in accordance with 9.4.5.1.3.

9.6.2.5 Operation.

9.6.2.5.1 Starting Sequence. The starting sequence shall be as follows:

(1) Start up all necessary combustion system auxiliaries in the proper sequence.
(2) Start the forced draft fan (for the pressure furnace only).
(3) Start the primary air fan.
(4) Open all valves in lines to burners to be started, including barrier valves and dusttight valves.
(5) Adjust the primary airflow to the desired value, at least sufficient to provide minimum burner line velocity.
(6) Start pressure locks.
(7) Start the pulverizer air fan.
(8) Start the pulverizer.

Copyright 2014 National Fire Protection Association (NFPA). Licensed, by agreement, for individual use and download on October 4, 2014 to LEADER and READER for designated user PATTARAPORN SRITRAKOOL. No other reproduction or transmission in any form permitted without written permission of NFPA. For inquires or to report unauthorized use, contact licensing@nfpa.org.

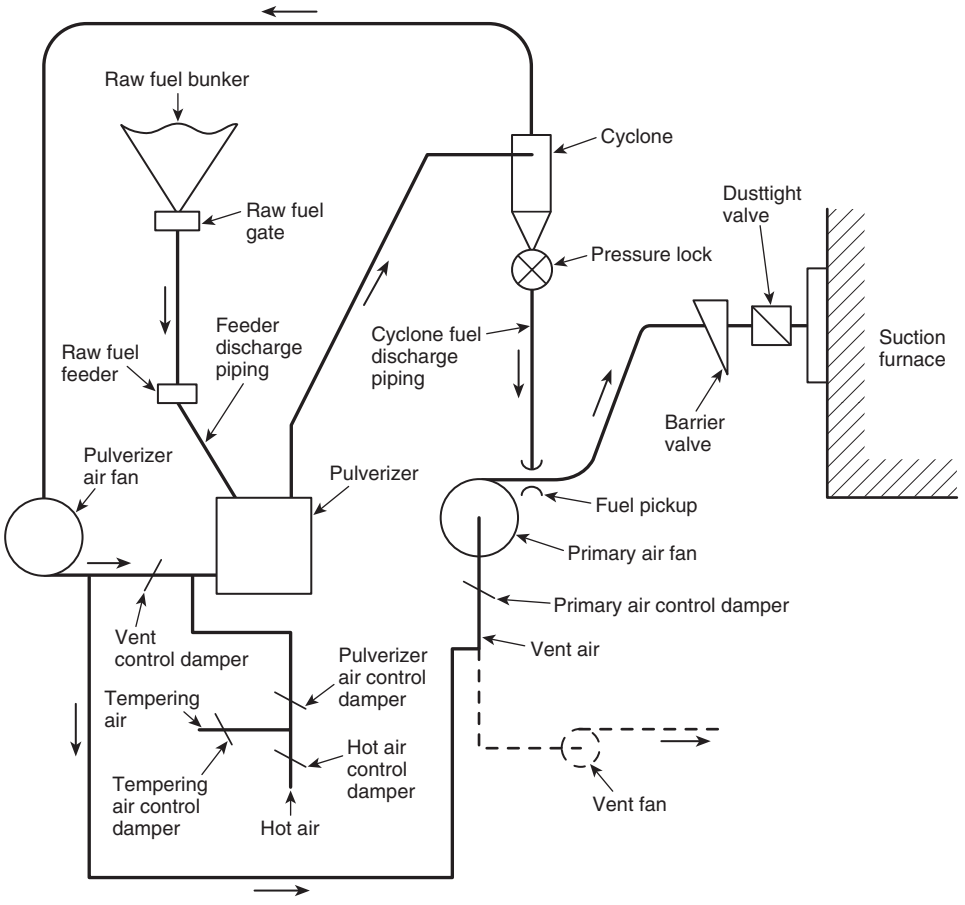

FIGURE 9.6.2.1(a) Semi-Direct-Firing Pulverized Fuel System for a Suction Furnace.

(9) Start the vent fan, if required.
(10) Start the raw fuel feeder.
(11) Adjust the dampers and controls as in 9.5.2.1(9).

9.6.2.5.2 Normal Operation. The procedures of 9.5.2.2 shall be followed.

9.6.2.5.3 Normal Shutdown. The normal shutdown procedure shall be as follows:

(1) Follow the procedures of 9.5.2.3.
(2) When the pulverizer is empty and cool, stop the pulverizer and the pulverizer air fan or exhauster.
(3) Stop the pressure locks.
(4) Stop the vent fan.
(5) Stop the primary air fan.

9.6.2.5.4 Interlocking. Interlocking shall be as outlined in 9.4.7.

9.6.3 Pulverized Fuel System for Blast Furnace Injection.

9.6.3.1 Description. This system, as shown in Figure 9.6.3.1, shall consist of an air-swept pulverizer.

9.6.3.1.1 The fuel shall be separated from the air in a cyclone or other type of dust collector.

9.6.3.1.2 Fuel shall discharge from the cyclone through a pressure lock valve and be collected, stored, and batch-pressurized to a pressure that is higher than the blast furnace pressure.

9.6.3.1.3 The pressurized fuel shall then be transported and distributed to the furnace tuyeres.

9.6.3.1.4 This system shall have the following three major subsystems:

(1) Fuel grinding and collecting system
(2) Inert gas, pressurized fuel, storage, and feeding system
(3) Pulverized fuel transportation and distribution system

9.6.3.2 System Arrangement.

9.6.3.2.1 The pulverizer and pulverized fuel-collecting, fuel-pressurizing, and fuel-feeding equipment shall be located remotely from the blast furnace unless other design requirements locate it close to the furnace.

9.6.3.2.2 The distribution system shall be located close to the blast furnace.

9.6.3.2.3 The pulverizer fan shall be located ahead of the air heater and the pulverizer, between the air heater and the pulverizer, at the pulverizer outlet, or at the cyclone or dust collector vent.

9.6.3.2.4 This system shall include the following special equipment:

(1) Pulverizer air heater
(2) Cyclone separator or other type of dust collector
(3) Cyclone pressure lock

Copyright 2014 National Fire Protection Association (NFPA). Licensed, by agreement, for individual use and download on October 4, 2014 to LEADER and READER for designated user PATTARAPORN SRITRAKOOL. No other reproduction or transmission in any form permitted without written permission of NFPA. For inquires or to report unauthorized use, contact licensing@nfpa.org.

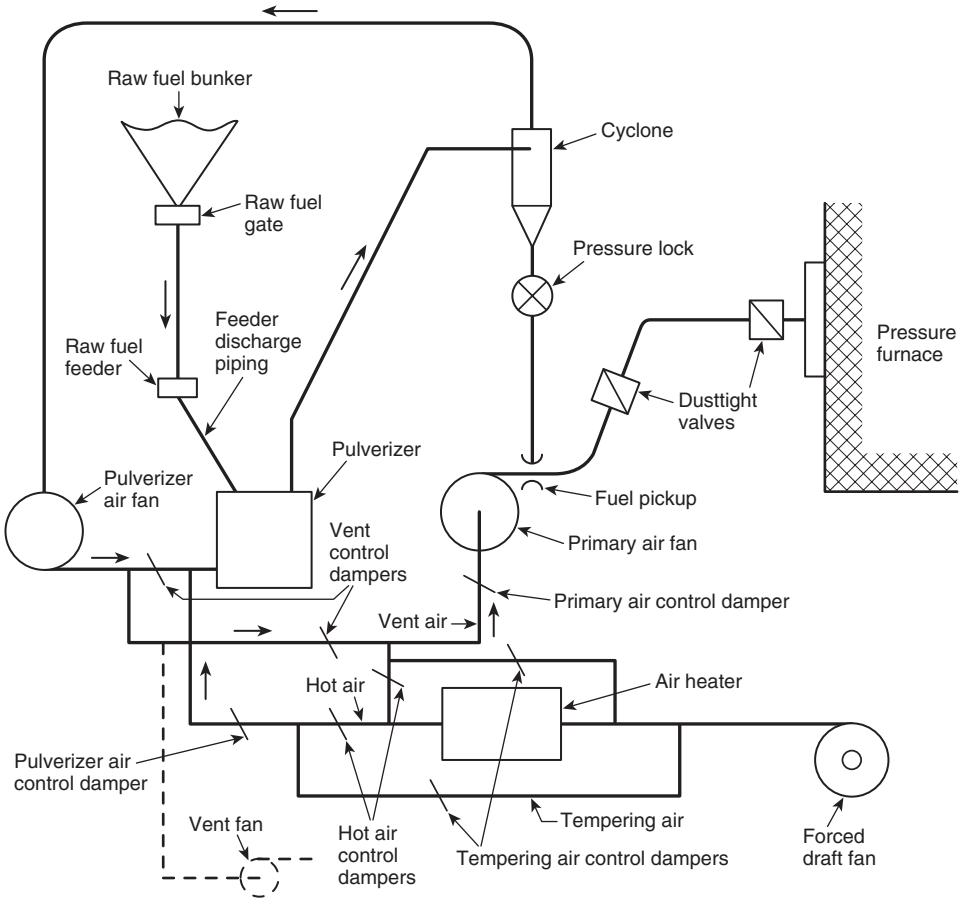

FIGURE 9.6.2.1(b) Semi-Direct-Firing Pulverized Fuel System for a Pressurized Furnace.

(4) Pulverized-fuel bin
(5) Pulverized-fuel feed tanks
(6) Pressuretight isolation valves
(7) Injection air system
(8) Inert gas system
(9) Fuel injection lances
(10) Flow control of air or flue gas
(11) Vent dust collector

9.6.3.3 Valve Requirements.

9.6.3.3.1 Pressure locks shall be installed at the pulverized fuel discharge of the cyclone separator or vent dust collector return lines.

9.6.3.3.2 Dusttight Valves.

9.6.3.3.2.1 Special dusttight valves shall be installed at each fuel outlet of the pulverized fuel bin, at the fuel discharge outlet of each feed tank, and at each fuel outlet of the pulverized fuel distributors.

9.6.3.3.2.2 These valves shall be tight at a pressure that is 1.5 times the required pressure in the feed tanks.

9.6.3.4 Isolation Requirements. Isolation damper(s) shall be provided upstream of the pulverizer and at the discharge of the cyclone separator to permit inerting in this system.

9.6.3.5 Operation.

9.6.3.5.1 Operating procedures for handling pulverized fuel being injected to the blast furnace shall be established to avoid fires and explosions in the pulverized fuel injection system.

9.6.3.5.2 Operation of Fuel Pulverizing Equipment. The principles and procedures of 9.5.3 shall apply to this storage-grinding system.

9.6.3.5.3 Operation of fuel injection equipment shall be as follows:

(1) Ascertain that the blast furnace is in service before starting the pulverized fuel injection system.
(2) Start the inert gas source.
(3) Start the injection air system blower or compressor and pressurize the injection line to the distributor.
(4) Pressurize the filled pulverized fuel feed tank with inert gas.
(5) Open the dusttight valves in lines leaving the distributors.
(6) Establish transport airflow.
(7) Open the discharge dusttight valves from the pulverized fuel feed tank.

9.6.3.5.4 Inert gas shall be used to fluidize and pressurize the feed tank system.

9.6.3.5.5 Pulverized fuel flow shall be controlled by regulating the pressure drop across the system.

Copyright 2014 National Fire Protection Association (NFPA). Licensed, by agreement, for individual use and download on October 4, 2014 to LEADER and READER for designated user PATTARAPORN SRITRAKOOL. No other reproduction or transmission in any form permitted without written permission of NFPA. For inquires or to report unauthorized use, contact licensing@nfpa.org.

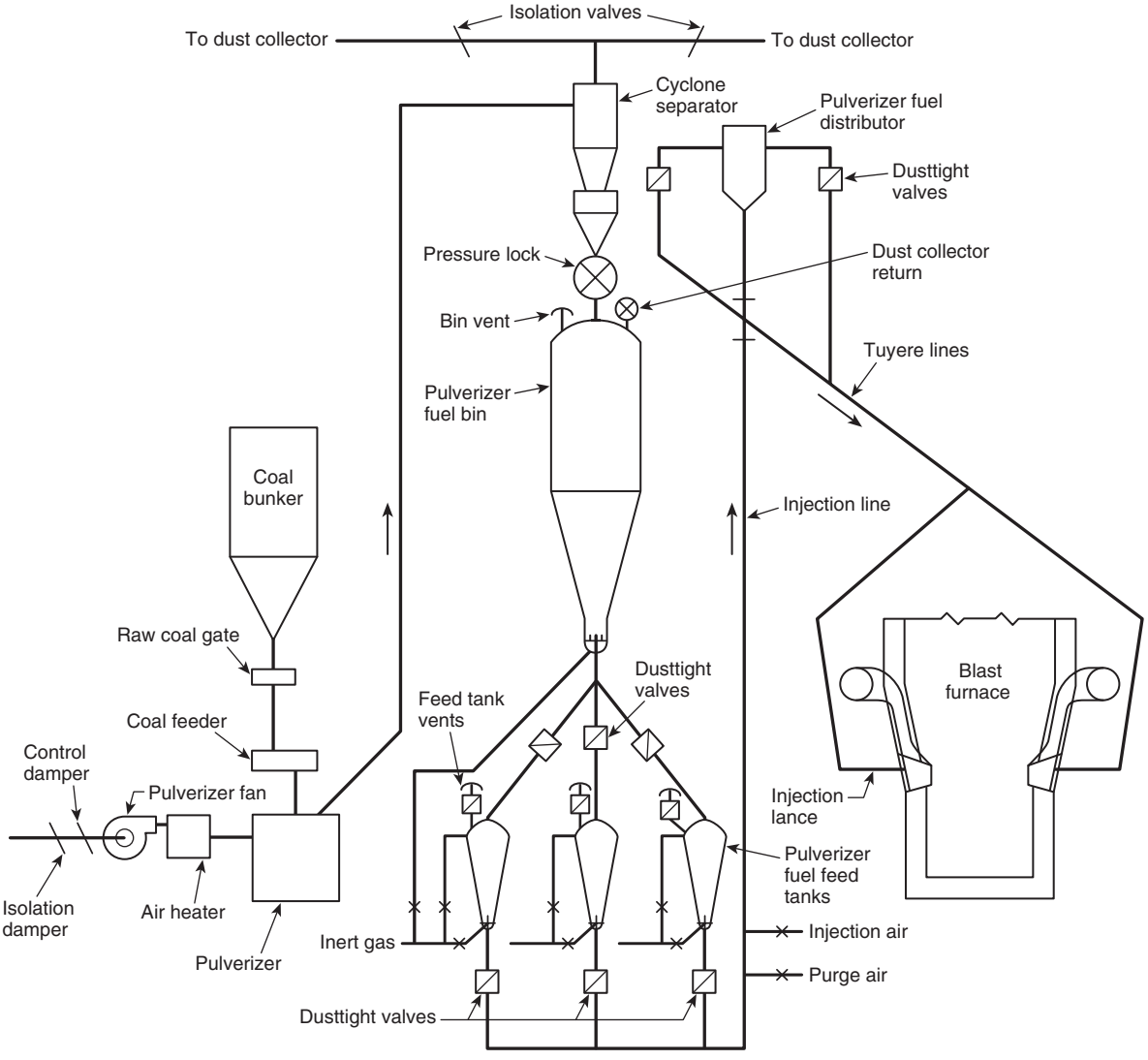

FIGURE 9.6.3.1 Blast Furnace Pulverized Fuel Injection System.

9.6.3.6 Normal Shutdown.

9.6.3.6.1 The shutdown sequence shall be as follows:

(1) Empty the fuel bin and feed tanks of pulverized fuel.
(2) Purge the injection and distribution system.
(3) Close the distributor dusttight valves.

9.6.3.6.2 If all pulverized fuel cannot be removed from the system, inert gas shall be provided for the feed hoppers and pulverized fuel bin when the system is idle.

9.6.3.7 Interlocking. In addition to the interlocking requirements of 9.4.7.4, the following shall be included:

(1) Failure of the pulverizer airflow trips the separately fired air heater.
(2) Failure of the cyclone separator or other type of dust collector pressure lock trips the raw coal feeder.
(3) Power failure closes all valves that are required to isolate the system.

9.6.4 Direct-Firing System for Rotary Kilns. This system is a form of direct firing as described in 9.4.5.1 and shown in Figure 9.6.4(a) and Figure 9.6.4(b). The only special equipment is an optional dust collector with a pressure lock for cleaning hot air or gas.

9.6.4.1 Isolation Requirements.

9.6.4.1.1 When a bypass air system is used, a bypass control damper shall be installed.

9.6.4.1.2 A tempering damper shall be installed near the kiln hood to protect the hot gas duct.

9.6.4.2 Operation.

9.6.4.2.1 Starting Sequence. The starting sequence shall be as follows:

(1) Start the pressure lock.
(2) Start the primary air fan or exhauster.

Copyright 2014 National Fire Protection Association (NFPA). Licensed, by agreement, for individual use and download on October 4, 2014 to LEADER and READER for designated user PATTARAPORN SRITRAKOOL. No other reproduction or transmission in any form permitted without written permission of NFPA. For inquires or to report unauthorized use, contact licensing@nfpa.org.

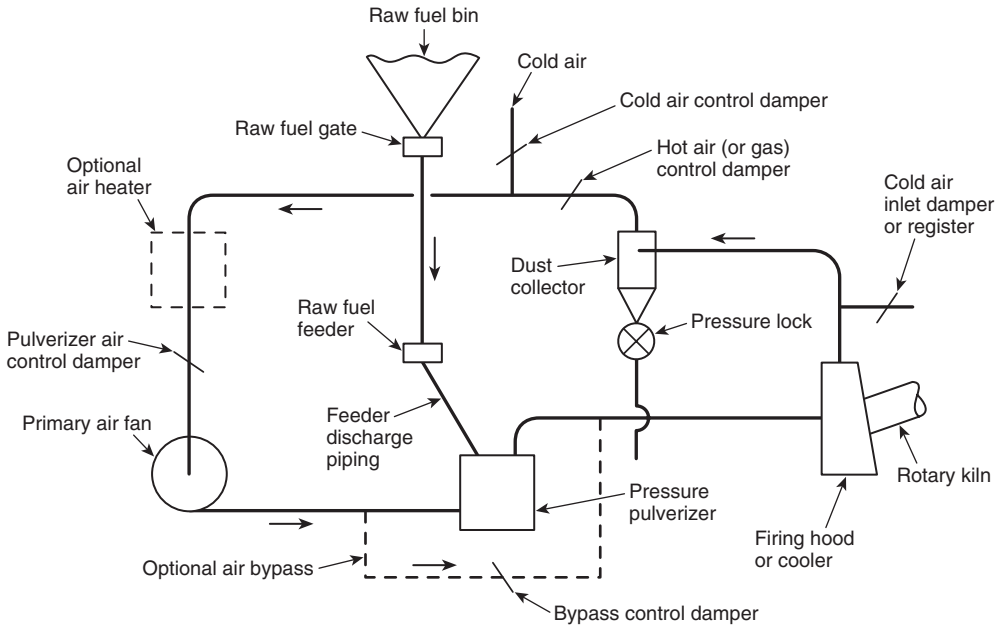

FIGURE 9.6.4(a) Direct-Fired Pulverized Fuel Systems for Rotary Kilns with Pressure Pulverizer.

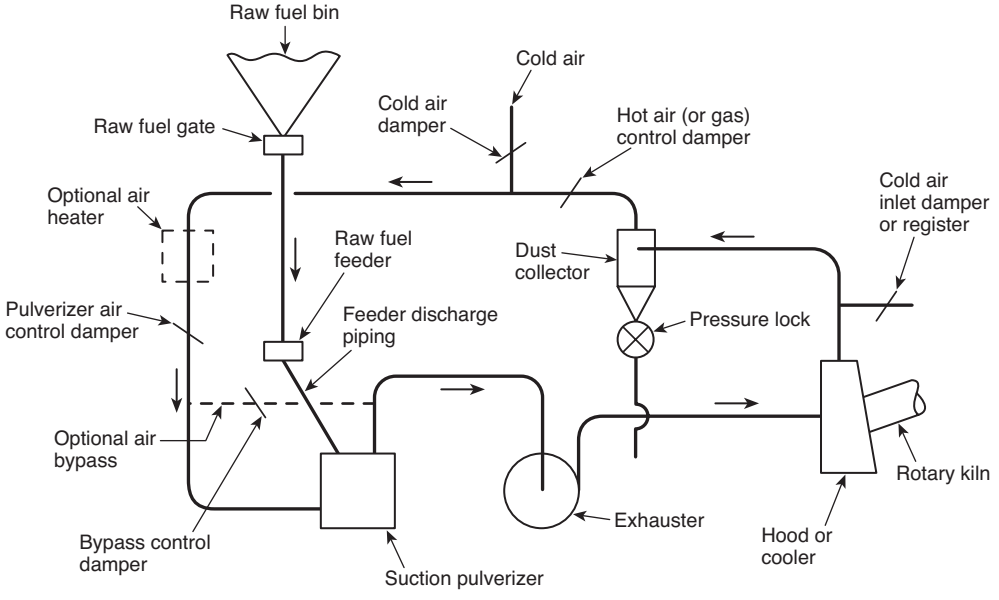

FIGURE 9.6.4(b) Direct-Fired Pulverized Fuel Systems for Rotary Kilns with Suction Pulverizer.

(3) Start the air heaters, if furnished.
(4) Start the pulverizer.
(5) Start the raw fuel feeder.
(6) Adjust the primary air and fuel to the desired value.

9.6.4.2.2 Normal Operation. Normal operation shall be as described in 9.5.2.2.

9.6.4.2.3 Normal Shutdown. The normal shutdown procedure shall be as follows:

(1) Shut off the hot air.
(2) When the pulverizer is cool, stop the raw fuel feeder.
(3) When the pulverizer is empty, stop the pulverizer.
(4) Stop the primary air fan or exhauster.
(5) Stop the pressure lock.

9.6.4.3 Interlocking. Interlocking shall be as described in 9.4.7.

Copyright 2014 National Fire Protection Association (NFPA). Licensed, by agreement, for individual use and download on October 4, 2014 to LEADER and READER for designated user PATTARAPORN SRITRAKOOL. No other reproduction or transmission in any form permitted without written permission of NFPA. For inquires or to report unauthorized use, contact licensing@nfpa.org.

Chapter 10 Stokers

10.1* Purpose.

10.1.1 The purpose of this chapter shall be to establish minimum requirements for the design, installation, operation, and maintenance of stoker-fired boilers, their fuel-burning systems, and related control equipment in order to contribute to operating safety. The requirements of Chapters 1 through 4 shall apply unless they conflict with the requirements of Chapter 10.

10.1.2 Instrumentation, safety interlocks and protective devices, operating sequences, and a clear understanding of furnace explosions by designers and operators shall be utilized to reduce the risks and actual incidents.

10.2* Fuel-Burning System.

10.2.1 System Requirements.

10.2.1.1 Subsystems.

10.2.1.1.1 The stoker fuel-burning system shall consist of the following subsystems:

(1) Air supply
(2) Fuel supply
(3) Grate
(4) Furnace
(5) Combustion products removal
(6) Ash removal

10.2.1.1.2 Each subsystem shall be properly sized and interconnected to satisfy the functional requirements and not to interfere with the combustion process.

10.2.1.2 The stoker fuel-burning system shall include the subsystems of 10.2.1.2.1 through 10.2.1.2.4.

10.2.1.2.1 Air Supply Subsystem. See 4.7.5.

10.2.1.2.2 Fuel Supply Subsystem.

10.2.1.2.2.1 The fuel supply equipment shall be properly sized and arranged to ensure a continuous, controlled fuel flow adequate for all operating requirements of the unit.

10.2.1.2.2.2 The fuel unloading, storage, transfer, and preparation facilities shall be designed and arranged to size the fuel properly, to remove foreign material, and to minimize interruption of fuel supply. This requirement shall include the provision of fuel sizing equipment and magnetic separators where necessary.

10.2.1.2.2.3* Mass-fired municipal solid waste systems shall incorporate fire-detection and fire-extinguishing systems into and over the feed system to extinguish and control the flashbacks of fuel as it is being fed into the furnace. Extinguishing systems shall be capable of being used repeatedly without taking the unit out of service.

10.2.1.2.3* Furnace Subsystem.

10.2.1.2.3.1 The furnace shall be sized and arranged with respect to the grate subsystem so that the grate is fired to maintain stable combustion and minimize furnace pressure fluctuations.

10.2.1.2.3.2 Observation ports shall be provided to permit inspection of the furnace and grate.

10.2.1.2.3.3 Observation ports and lancing doors for mass-fired municipal solid waste units shall be provided with vision ports that permit observation and operation of the unit while puffs are expected and occurring and also with the following components:

(1) Glasses shall be replaceable without taking the unit out of service.
(2) Lancing ports with aspirators or other devices to safely permit lancing of the fuel bed without restricting operations shall be provided when required by operating conditions.

10.2.1.2.3.4 Relatively high ID fan head capability is required by flue gas cleaning equipment. The maximum negative furnace pressure is determined primarily by the maximum head characteristic of the ID fan; therefore, an objective of the final design shall be to limit the maximum head capability of draft equipment to that necessary for satisfactory operation. Fan selection and arrangement of ductwork shall be designed to limit the effect of negative head. *(See Section 6.5.)*

10.2.1.2.3.5 The furnace and the flue gas removal system shall be designed so that the maximum head capability of the ID system with ambient air does not exceed the design pressure of the furnace, ducts, and associated equipment. This design pressure shall be defined the same as the wind and seismic stresses in ASCE 7, *Minimum Design Loads for Buildings and Other Structures.*

10.2.1.2.3.6 Transient design pressures shall be addressed as follows:

(1) *Positive transient design pressure.* The positive transient design pressure shall be at least, but shall not be required to exceed, +8.7 kPa (+35 in. of water). If the test block capability of the FD fan at ambient temperature is less positive than +8.7 kPa (+35 in. of water), the positive transient design pressure shall be at least, but shall not be required to exceed, the test block capability of the FD fan.
(2) *Negative transient design pressure.* The negative transient design pressure shall be at least as negative as, but shall not be required to be more negative than, –8.7 kPa (–35 in. of water). If the test block capability of the ID fan at ambient temperature is less negative than –8.7 kPa (–35 in. of water), for example, –6.72 kPa (–27 in. of water), the negative transient design pressure shall be at least as negative as, but shall not be required to be more negative than, the test block capability of the ID fan.

10.2.1.2.4 Ash Removal Subsystem.

10.2.1.2.4.1 The grate subsystem and the flue gas cleaning subsystem shall be sized and arranged so as to remove the ash at least at the same rate as it is generated by the fuel-burning process during unit operation.

10.2.1.2.4.2 Convenient access and drain openings shall be provided.

10.3 Combustion Control System.

10.3.1 System Requirements.

10.3.1.1 Furnace input shall be controlled to respond to the energy demand under all operating conditions.

10.3.1.2 The air-fuel mixture shall be maintained within safe limits as established by test under any boiler output condition within the controllable operating range of the subsystem.

Copyright 2014 National Fire Protection Association (NFPA). Licensed, by agreement, for individual use and download on October 4, 2014 to LEADER and READER for designated user PATTARAPORN SRITRAKOOL. No other reproduction or transmission in any form permitted without written permission of NFPA. For inquires or to report unauthorized use, contact licensing@nfpa.org.

10.3.1.3 When the rate of furnace input is being changed, the airflow and fuel flow shall be changed simultaneously at the proper rates to maintain a safe air–fuel ratio during and after the change.

10.3.1.3.1 This requirement shall not prohibit provisions for air lead and lag of fuel during changes in the firing rate.

10.3.1.3.2 Placing the fuel flow control on automatic without the airflow in automatic shall be prohibited.

10.3.1.4 Furnace draft shall be maintained at the desired set point in the combustion chamber.

10.3.1.5 A means shall be provided to prevent the control system from demanding a fuel-rich mixture.

10.3.1.6 Equipment shall be designed and procedures shall be established to allow as much on-line maintenance of combustion control equipment as practicable.

10.3.1.7 Provisions for calibration and check testing of combustion control and associated interlock equipment shall be furnished.

10.3.2 Overfire Air. If applicable, the high pressure overfire air turbulence system shall be controlled in either of two methods:

(1) Control of the blower outlet pressure using a manual set point
(2) Control of overfire air in parallel with undergrate airflow

10.3.3 Flue Gas Analyzers. Consideration shall be given to providing oxygen and combustibles meters for use as operating guides.

10.4 Operation.

10.4.1 General.

10.4.1.1 This section shall apply to typical stoker operation.

10.4.1.2 Manufacturers' recommendations shall be consulted.

10.4.2 Start-Up (General).

10.4.2.1 After an overhaul or other maintenance, a complete functional check of the safety interlocks shall be made.

10.4.2.2 Preparation for starting shall include a thorough inspection and check, to include but not be limited to the following:

(1) Furnace and gas passages in good repair and free of foreign material
(2) Evacuation of boiler enclosure and associated ductwork by all personnel and closing of all access and inspection doors
(3) Supply of energy to control system and to safety interlocks
(4) Verification that the grate is clear of foreign material and is operational
(5) Verification that the fuel feed system is clear of foreign material and is operational
(6) Feeder control operational through full range
(7) All air and flue gas control dampers operational through full range
(8) Establishment of proper drum level with clean, treated, and de-aerated water
(9) Satisfactory operation of oxygen and combustible analyzers, where provided
(10) Setting of vent and drain valves in accordance with the boiler manufacturer's instructions

10.4.3 Start-Up Procedure (Cold Start). The cold start procedure shall be as follows:

(1) Verify an open flow path from the inlet of the forced draft fan to the stack. Where natural draft is not sufficient for initial firing, start the induced draft fan and maintain normal furnace draft.
(2) Fill feeder hopper with fuel, start feed mechanism, and establish a bed of fuel on the grate.
(3) From outside the furnace, spray the bed with a light coat of distillate oil or place oil-soaked rags or kindling on fuel bed. Do not use gasoline, alcohol, or other highly volatile material for light-off.
(4) Open furnace access door, light a torch, and ignite fuel by passing torch through the door.
(5) Start the ID fan (where it is not in operation) and place the draft control in automatic mode of operation when the bed of fuel has ignited.
CAUTION: Excessive negative draft will, in some cases, cause fuel to be pulled from the feeders onto the grate.
(6) Ensure that undergrate air pressure is always greater than furnace pressure to prevent reverse flow.
(7) Start the FD fan with dampers at minimum position when the fuel bed is actively burning.
(8) Start the overfire air fan immediately to prevent damage from gases passing through the ductwork.
(9) Start the fuel feed. Observe the operation and adjust the fuel rate and air as required until the boiler steam pressure is at its desired operating pressure.
(10) Place fuel and air in automatic mode of operation.

10.4.3.1 When starting up and firing high moisture fuel, the operation of auxiliary fuel burners shall be evaluated.

10.4.3.2 Where a boiler is equipped with auxiliary gas or oil burners, it shall be permitted to put the boiler on the line using this auxiliary fuel and then to feed the solid fuel up on the grate, where it will ignite from radiant heat of the auxiliary burners.

10.4.3.3 Care shall be taken to protect the grate from overheating.

10.4.3.4* In all cases, manufacturers' instructions shall be consulted.

10.4.4 Normal Operation.

10.4.4.1 The firing rate shall be regulated by increasing or decreasing the fuel and air supply simultaneously to the grate(s), maintaining normal air-fuel ratio at all firing rates.

10.4.4.2 Each stoker shall be equipped with adjustments for the distribution of the fuel.

10.4.4.2.1 Manual adjustments for the distribution of fuel shall be made based on the visual appearance of the fuel bed, furnace, and flue gas analyzer.

10.4.4.2.2 Visual observations of the fuel bed conditions through open doors shall be made with extreme care.

10.4.4.3 Manual adjustments to the individual rows of overfire turbulence air nozzles for maximum furnace efficiency and minimum emission discharge shall be permitted.

10.4.4.4 Fuel shall be fed to maintain an even depth of ash. As the percentage of ash in the fuel changes, adjustments shall be

Copyright 2014 National Fire Protection Association (NFPA). Licensed, by agreement, for individual use and download on October 4, 2014 to LEADER and READER for designated user PATTARAPORN SRITRAKOOL. No other reproduction or transmission in any form permitted without written permission of NFPA. For inquires or to report unauthorized use, contact licensing@nfpa.org.

made. The depth of ash at the discharge end of the crates shall be observed.

10.4.5 Normal Shutdown. The normal shutdown procedure shall be as follows:

(1) The boiler load shall be reduced manually to minimum load.
(2) The fuel shutoff gates, where furnished above the fuel feeders, shall be closed.
(3) The remaining fuel downstream from the shutoff gate shall be burned out.
(4) Normal furnace draft shall be maintained throughout this process.
(5) The overfire air fan shall be left running except in boilers where manufacturer's recommendations state otherwise.
(6) After fuel feed ceases and the fire is burned out, the overfire air and forced draft fan shall be operated in accordance with the manufacturer's recommended cool-down rate.
(7) The overfire air fan shall be left running until the furnace and boiler are sufficiently cool to prevent damage to the overfire system from a backflow of hot gases.
(8) Where the forced draft fan is shut off, a natural draft flow of air through the grates shall be provided.
(9) For spreader stokers, fuel feeders with rotating devices shall be left running to maintain even temperature until the furnace has cooled sufficiently to prevent damage to the rotating devices.

10.4.6 Normal Hot Start.

10.4.6.1 When it is desired to restart the unit after it has been bottled up under pressure for a short time and when grate burning has stopped, the start procedure shall be as follows:

(1) Verify that the fuel feed system is clear of foreign material and is operational.
(2) Keep the feeder control operational through full range.
(3) Keep all air and flue gas control dampers operational through full range.
(4) Establish the drum level.
(5) Set the vent and drain valves in accordance with the boiler manufacturer's instructions.
(6) Verify an open flow path from the inlet of the FD fan to the stack. Where the natural draft is insufficient for initial firing, start the ID fan and maintain normal furnace draft.
(7) Fill the feeder hopper with fuel, start a feed mechanism, establish a bed of fuel on the grate, and ignite it.
(8) When the bed of fuel has ignited, start the ID fan (where it is not in operation) and place the draft control in automatic mode of operation.
CAUTION: Excessive negative draft will, in some cases, cause fuel to be pulled from the feeders onto the grate.
(9) Undergrate air pressure shall always be greater than furnace pressure to prevent reverse flow.
(10) When the fuel bed is actively burning, start the FD fan with dampers at minimum position.
(11) The overfire air fan shall be started immediately to prevent damage from gases passing through the ductwork.
(12) Start the fuel feed. Observe the operation and adjust the fuel rate and air as required until boiler steam pressure is at the desired operating pressure.
(13) Place the fuel and air in the automatic mode of operation.

10.4.6.2 When it is desired to restart the unit after it has been bottled up under pressure for a short time and the grate fire continues, the hot-start procedure shall be as follows:

(1) Establish the drum level.
(2) Set the vent and drain valves in accordance with the boiler manufacturer's instructions.
(3) Verify an open flow path from the inlet of the FD fan to the stack. Where the natural draft is insufficient for initial firing, start the ID fan and maintain normal furnace draft.
(4) Fill the feeder hopper with fuel.
(5) Start the ID fan (where it is not in operation) and place the draft control in automatic mode of operation.
CAUTION: Excessive negative draft will, in some cases, cause fuel to be pulled from the feeders onto the grate.
(6) Ensure that undergrate air pressure is always greater than furnace pressure in order to prevent reverse flow.
(7) Start the FD fan with dampers at minimum position when the fuel bed is actively burning.
(8) Start the overfire air fan immediately to prevent damage from gases passing through the ductwork.
(9) Start the fuel feed. Observe the operation and adjust the fuel rate and air as required until boiler steam pressure is at the desired operating pressure.
(10) Place fuel and air in automatic mode of operation.

10.4.7 Emergency Shutdown. In the situations in 10.4.7.1 through 10.4.7.5, the manufacturer's emergency procedures shall be followed.

10.4.7.1 For emergency shutdown caused by an interruption of fuel when the fuel supply cannot be restarted in a very short length of time, the normal shutdown procedure shall be followed.

10.4.7.2 Loss of Induced Draft Fan.

10.4.7.2.1 Loss of the ID fan shall require the following:

(1) The induced draft damper going into the full open position
(2) The fuel feed being immediately shut off
(3) The FD fan being shut down
(4) The forced draft damper going into the closed position
(5) The overfire air fan remaining running and the overfire airflow dampers being placed in the closed position

10.4.7.2.2 Paragraph 10.4.7.2.1 shall not apply to boilers where the manufacturer's recommendations state otherwise.

10.4.7.3 Loss of Forced Draft Fan.

10.4.7.3.1 Loss of the FD fan shall require the immediate shutdown of the fuel feed and maintenance of normal furnace draft.

10.4.7.3.2 Caution shall be exercised, because excessive negative draft will cause fuel to be pulled from the feeders onto the grate in some installations.

10.4.7.4 An emergency shutdown caused by loss of feedwater shall require immediate completion of the following:

(1) The fuel feed shall be shut down.
(2) The FD fan shall be shut down.
(3) Normal furnace draft shall be maintained.
(4) The overfire air fan shall remain running, and overfire airflow dampers shall be placed in the closed position.

10.4.7.4.1 Paragraph 10.4.7.4 shall not apply to boilers where the manufacturer's recommendations state otherwise.

10.4.7.4.2 The emergency shutdown procedure in 10.4.7.4 shall be permitted to vary in accordance with the manufacturer's recommendations.

Copyright 2014 National Fire Protection Association (NFPA). Licensed, by agreement, for individual use and download on October 4, 2014 to LEADER and READER for designated user PATTARAPORN SRITRAKOOL. No other reproduction or transmission in any form permitted without written permission of NFPA. For inquires or to report unauthorized use, contact licensing@nfpa.org.

10.4.7.5 Critical Emergency Situations. The following critical emergency situations shall require the following actions:

(1) Low drum level
   (a) Stop all fuel feed(s).
   (b) Stop fan(s) that supply combustion air to the unit.
   (c) Continue running the ID fan with the combustion air damper at minimum setting to limit continued combustion of the residual fuel bed.

   CAUTION: Excessive negative draft will, in some cases, cause fuel to be pulled from the feeders onto the grate.

(2) High operating steam pressure
   (a) Reduce all fuel feed(s).
   (b) Decrease combustion air, and maintain furnace draft.

10.4.8* Multifuel Firing.

10.4.8.1 The total fuel input shall be limited to the maximum design steaming capacity of the boiler.

10.4.8.2 Excess air shall be maintained at all times by continuously observing the burner flames, the air-fuel ratio, or an oxygen indicator, where provided.

10.5 Furnace Inspection.

10.5.1 Personnel shall be prevented from entering the furnace until slag deposits have been removed.

10.5.2 Personnel shall be protected from falling objects.

10.5.3 On overfeed mass burning stokers, the feed gate shall be blocked open to prevent accidental dropping of the gate.

10.6 On-Line Maintenance.

10.6.1 Responsible actions shall be taken and furnace draft shall be increased and maintained during the performance of any maintenance that requires personnel exposure to the furnace, such as grate and feeder work.

10.6.2 Protective clothing shall be worn by personnel performing such maintenance.

10.6.3 When possible, such repairs shall be performed with the unit shut down.

10.6.4 Any work that requires the presence of personnel inside the undergrate plenum chamber while the unit is in operation shall be prohibited.

10.7 Access Doors or Observation Ports.

10.7.1 Personnel shall use protective clothing and face shields while viewing the furnace through access doors or observation ports and while manipulating the fuel or ash bed.

10.7.2 The furnace draft shall be increased before access doors or observation ports are opened, in order to prevent any potential blowback.

10.8 Ash Hopper Access Doors.

10.8.1* Fly ash hopper access doors shall not be opened while the boiler is operating because hot or smoldering fly ash that may have bridged over the ash removal connection could cascade out the door.

10.8.2 Small, capped clean-out connections shall be used at the hopper bottom for unplugging bridged fly ash.

10.8.3 Precautions shall be taken when opening ash hopper access doors after shutdown because hot or smoldering fly ash that has bridged over the ash removal connection will cascade out the door if disturbed. Because fly ash will smolder long after unit shutdown, precautions shall be taken to avoid stepping into accumulated ash while inspecting equipment.

10.8.4 Vertical-lifting ash pit doors shall be securely blocked open prior to personnel entry.

10.9 Ash Handling. Appropriate protective equipment shall be utilized for hazards associated with ash handling that involves high temperature materials and dust.

Annex A Explanatory Material

Annex A is not a part of the requirements of this NFPA document but is included for informational purposes only. This annex contains explanatory material, numbered to correspond with the applicable text paragraphs.

A.1.1 Technological advances in recent years and, in particular, the pervasiveness of microprocessor-based hardware make it even more important that only highly qualified individuals be employed in applying the requirements of this code to operating systems. Each type of hardware has its own unique features and operational modes. It is vital that the designer of the safety system be completely familiar with the features and weaknesses of the specific hardware and possess a thorough understanding of this code and its intent.

It is not possible for this code to encompass all specific hardware applications, nor should this code be considered a "cookbook" for the design of a safety system. In applying any type of equipment to a safety system, the designer should consider carefully all the possible failure modes and the effect that each might have on the integrity of the system and the safety of the unit and personnel. In particular, no single point failure should result in an unsafe or uncontrollable condition or a masked failure of a microprocessor-based system that could result in the operator unwittingly taking action that could lead to an unsafe condition.

In this code, the sections that apply to all fuels should be used in conjunction with those sections covering the specific fuel utilized.

A.1.1.4(2) This can include some heavier-than-air gases.

A.1.1.7 It is not possible for this code to encompass the specific hardware applications, nor should it be considered a cookbook for the design of a safe HRSG system. A HRSG is a complex system, often involving numerous components, multiple steam pressure levels, emission control systems, and augmented air or supplementary firing.

The simplest combined cycle plant automatically has certain hazards that are common to all designs. Coupling various designs of heat recovery units with combustion turbines of varying characteristics in different configurations (such as varying damper arrangements) can produce unique hazards. The potential ineffective use of the combustion turbine as the source of the purge and potential sources of substantial fuel entering the HRSG from normal and false starts are major considerations that need to be addressed.

Other concerns are special provisions, for example, automatic transfer during transients, multiple stacks that can create reverse flows, internal maintenance of the HRSG with the combustion turbine in operation, multiplicity of cross connections between units to prevent shutdown, and fitting the

Copyright 2014 National Fire Protection Association (NFPA). Licensed, by agreement, for individual use and download on October 4, 2014 to LEADER and READER for designated user PATTARAPORN SRITRAKOOL. No other reproduction or transmission in any form permitted without written permission of NFPA. For inquires or to report unauthorized use, contact licensing@nfpa.org.

HRSG into a small space using finned tubes that are more sensitive to temperature and subject to iron fires.

Insufficient failure analysis of arrangements, configurations, and equipment can increase the number of damaging incidents, lost production, and the possibility of personal injury or death. It is vital that the designer of the combustion turbine and any burner safety system(s) be completely familiar with the features, characteristics, and limitations of the specific hardware and also possess a thorough understanding of this code and its intent.

A.1.2.1 Combustion explosions involve several considerations. The basic cause of uncontrolled fires or combustion explosions is the ignition of an accumulated combustible mixture within the confined space of a furnace, a HRSG, or a pulverizer or the associated passes, ducts, and fans that convey the gases of combustion to the stack.

A dangerous combustible mixture within the boiler, HRSG, or pulverizer enclosure consists of the accumulation of an excessive quantity of combustibles mixed with air in proportions that result in rapid or uncontrolled combustion when an ignition source is supplied. An explosion can result from ignition of this accumulation if the quantity of combustible mixture and the proportion of air to fuel are such that an explosive force is created within the enclosure. The magnitude and the intensity of the explosion depend on both the relative quantity of combustibles that has accumulated and the proportion of air that mixes with the combustibles at the moment of ignition. Explosions, including "puffs," are the result of improper operating procedures by personnel, improper design of equipment or control systems, or malfunction of the equipment or control system.

Numerous conditions can arise in connection with the operation of a system that produce explosive conditions. The most common of these are as follows:

(1) An interruption of the fuel or air supply or ignition energy sufficient to result in momentary loss of flames, followed by restoration and delayed reignition of an accumulation
(2) Fuel leakage into an idle combustion chamber and the ignition of the accumulation by a spark or other source of ignition
(3) Repeated unsuccessful attempts to light off without appropriate purging, resulting in the accumulation of an explosive mixture
(4) The accumulation of an explosive mixture of fuel and air as a result of loss of flame or incomplete combustion and the ignition of the accumulation by a spark or other ignition source, such as could occur when an attempt is made to relight a burner(s)
(5) Purging with an airflow that is too high, which stirs up smoldering combustible materials

The listed conditions favorable to an explosion are typical examples, and an examination of numerous reports of explosions suggests that the occurrence of small explosions, puffs, or near misses has been far more frequent than usually is recognized. It is believed that improved instrumentation, safety interlocks and protective devices, proper operating sequences, and a clearer understanding of the problem by both designers and operators can greatly reduce the risks and actual incidence of explosions.

In a boiler or a HRSG, upset conditions or control malfunction can lead to an air-fuel mixture that could result in a flameout followed by reignition after a combustible air-fuel ratio has been re-established.

Dead pockets might exist in a pulverized fuel system or in a boiler or HRSG enclosure or other parts of the unit, where combustible mixtures can accumulate under upset conditions. These accumulations could ignite with explosive force in the presence of an ignition source.

Furnace or HRSG implosions involve another set of considerations. An implosion is the result of the occurrence of excessively low gas side pressure, which causes equipment damage. Two conditions that have caused implosions follow:

(1) A maloperation of the equipment that regulates the gas flow, including air supply and flue gas removal, resulting in exposure to excessive induced draft fan head capability
(2) The rapid decay of gas temperatures and pressure resulting from either a rapid reduction in fuel input or a master fuel trip

A combination of the two listed conditions has resulted in severe implosion incidents.

A.1.4 Users of equipment covered by this code should adopt those features that they consider applicable and practicable for existing installations. Physical limitations could cause disproportionate effort or expense with little increase in protection. In such cases, the authority having jurisdiction should be satisfied that reasonable protection is provided.

In existing units, any condition that represents a serious combustion system hazard should be mitigated by application of appropriate safeguards.

A.3.2.1 Approved. The National Fire Protection Association does not approve, inspect, or certify any installations, procedures, equipment, or materials; nor does it approve or evaluate testing laboratories. In determining the acceptability of installations, procedures, equipment, or materials, the authority having jurisdiction may base acceptance on compliance with NFPA or other appropriate standards. In the absence of such standards, said authority may require evidence of proper installation, procedure, or use. The authority having jurisdiction may also refer to the listings or labeling practices of an organization that is concerned with product evaluations and is thus in a position to determine compliance with appropriate standards for the current production of listed items.

A.3.2.2 Authority Having Jurisdiction (AHJ). The phrase "authority having jurisdiction," or its acronym AHJ, is used in NFPA documents in a broad manner, since jurisdictions and approval agencies vary, as do their responsibilities. Where public safety is primary, the authority having jurisdiction may be a federal, state, local, or other regional department or individual such as a fire chief; fire marshal; chief of a fire prevention bureau, labor department, or health department; building official; electrical inspector; or others having statutory authority. For insurance purposes, an insurance inspection department, rating bureau, or other insurance company representative may be the authority having jurisdiction. In many circumstances, the property owner or his or her designated agent assumes the role of the authority having jurisdiction; at government installations, the commanding officer or departmental official may be the authority having jurisdiction.

A.3.2.3 Code. The decision to designate a standard as a "code" is based on such factors as the size and scope of the document, its intended use and form of adoption, and whether it contains substantial enforcement and administrative provisions.

Copyright 2014 National Fire Protection Association (NFPA). Licensed, by agreement, for individual use and download on October 4, 2014 to LEADER and READER for designated user PATTARAPORN SRITRAKOOL. No other reproduction or transmission in any form permitted without written permission of NFPA. For inquires or to report unauthorized use, contact licensing@nfpa.org.

A.3.2.5 Listed. The means for identifying listed equipment may vary for each organization concerned with product evaluation; some organizations do not recognize equipment as listed unless it is also labeled. The authority having jurisdiction should utilize the system employed by the listing organization to identify a listed product.

A.3.3.3.4 Excess Air. This is not the same as *air-rich*, as defined in 3.3.5.

A.3.3.13 Autoignition Temperature (AIT). For units covered by this code, a spark or flame can be considered as the heating or heated element. Published autoignition temperatures are based on laboratory conditions. Consideration should be given to the effect of actual operating conditions, including temperature, pressure, and oxygen concentration.

A.3.3.25.2 Duct Burner. Duct burner designs include the use of elbow burners. Elbow burners are located outside the duct and discharge into the air or gas stream they are heating.

Duct burners can be used to increase the temperature of flue gas such as in selective catalytic reduction (SCR) retrofits and as flue gas reheaters following scrubbers.

A.3.3.26 Burner Management System. The burner management system can include the following functions as specified in this code: interlock system, fuel trip system, master fuel trip system, master fuel trip relay, flame monitoring and tripping systems, ignition subsystem, main burner subsystem, warm-up burner subsystem, bed temperature subsystem, and duct burner system.

A.3.3.38 Combustion Turbine Exhaust Systems. The definition for combustion turbine exhaust system does not apply to combustion turbine exhaust systems that do not have a HRSG, a heat exchanger, emissions control equipment, or any other restrictions in the exhaust flow path.

A.3.3.99 Master Fuel Trip. For HRSGs, a master fuel trip does not shut off fuel to the combustion turbine.

A.4.1 Safety in any plant is directly influenced by an extensive upfront effort in the engineering, design, and selection of equipment for each individual application.

Project inception phase. In the project inception phase, the following should be accomplished to ensure a plant design that meets expected operating modes and reliability needs:

(1) Establishment of plant operating parameters.
(2) Identification of site-related constraints.
(3) Review of steam cycle, including generating a family of heat balance diagrams for the expected operating ranges and modes.
(4) Conceptualization of plant layout to provide for personnel safety, operability, and maintenance needs.
(5) Definition and verification of requirements of worst-case operating transients, including start-ups.
(6) Definition of required test program.
(7) Definition of start-up criteria and goals.
(8) Identification of the authority having jurisdiction. If multiple authorities having jurisdiction are identified, the scope of each authority having jurisdiction should be determined.
(9) Establishment of electrical area classifications by the owner or the owner's designated representative in conjunction with the boiler or HRSG system designer.

Equipment planning. The project should consider the use of dynamic simulation, prior operating experience, or both before equipment is selected. Dynamic simulation, where utilized, should include development of the following:

(1) Configuration and data initialization
(2) Plant behavior knowledge
(3) Preliminary control system design and tuning
(4) Validation of operating requirements (system performance)
(5) Transients and ramps for intended and unintended operation

A.4.1.3 The maximum number of automatic trip features does not necessarily provide for maximum overall safety. Some trip actions result in additional operations that increase exposure to hazards.

A.4.1.5 The installation of a boiler or HRSG in accordance with the requirements of this code does not in and of itself require a change to the electrical classification of the boiler or HRSG location.

A.4.3.1 *Human error.* Statistics indicate that human error is a contributing factor in the majority of explosions. It is important to consider whether the error was a result of any of the following:

(1) Lack of understanding of, or failure to use, proper operating procedures, safeguards, and equipment
(2) Unfavorable operating characteristics of the equipment or its control
(3) Lack of functional coordination of the various components of the steam-generating system and its controls

Unfavorable function design. Explosions also can occur as a result of unfavorable functional design. Investigations frequently reveal human error but completely overlook the chain of causes that triggered the operating error. Therefore, the design, installation, and functional objectives of the overall system of components and their controls should be integrated. Consideration should be given to the existing ergonomics that can affect system operation.

A.4.3.2 Integration of the various components of these systems is accomplished by the following:

(1) Design and operating personnel who possess a high degree of competence in this field and who are mandated to achieve these objectives
(2) Periodic analysis of the plant with respect to evolving technology so that improvements can be made to make the plants safer and more reliable
(3) Documentation of the plant equipment, systems, and maintenance

A.4.4 Most causes of failures can be traced to human error. The most significant failures include inadequate training of operators, lack of proper maintenance, and improper application of equipment. Users and designers must utilize engineering skill to bring together the proper combination of controls and training necessary for the safe operation of equipment.

A.4.4.1.1 An example of an inspection and maintenance schedule is as follows:

(1) *Daily:* flame failure detection system, low water level cutout, and alarm
(2) *Weekly:* igniter and burner operation
(3) *Monthly:* fan and airflow interlocks, fuel safety shutoff valves for leakage, high steam pressure interlock, fuel pressure and temperature interlocks for fuel oil, high and low fuel pressure interlocks, and fuel gas strainer and drip leg

Copyright 2014 National Fire Protection Association (NFPA). Licensed, by agreement, for individual use and download on October 4, 2014 to LEADER and READER for designated user PATTARAPORN SRITRAKOOL. No other reproduction or transmission in any form permitted without written permission of NFPA. For inquires or to report unauthorized use, contact licensing@nfpa.org.

(4) *Semiannually:* burner components; flame failure system components; piping, wiring, and connections of all interlocks and shutoff valves; calibration of instrumentation and combustion control system

A.4.4.1.3 When a system includes a built-in test mechanism that bypasses any safety device, it should be interlocked to prevent operation of the system while the device is in the test mode, unless operation procedures specifically address this device or it is listed for that purpose.

A.4.4.2.1.1 The operator training program should consist of one or more of the following:

(1) Review of operating manuals and videotapes
(2) Programmed instruction
(3) Testing
(4) Use of simulators
(5) Field training
(6) Other procedures as agreed upon by the manufacturers and the users

A.4.4.2.2.1 The maintenance training program should consist of one or more of the following:

(1) Review of maintenance manuals and videotapes
(2) Programmed instruction
(3) Testing
(4) Field training
(5) Other procedures as agreed upon by the manufacturers and the users

A.4.6 The transient internal design pressure defined in Section 4.6 should be taken into consideration in the design of the airflow and gas flow path from the forced draft fan discharge through the stack.

A.4.7.3.1 Incorrect valve and damper positions on air-fuel ratio systems can rapidly result in hazardous conditions. During setup, commissioning, and operation, it is necessary to verify that valves and dampers used to maintain air-fuel ratio are in the correct position. It is also important to ensure that valves, dampers, and their actuators are properly aligned. A means of local external visual position confirmation should be provided to assist with this important task. This could be implemented using manufacturer-provided markings, a notch on a wafer valve stem, or an appropriately located reference mark added by the user.

A.4.7.5.2 Hazardous contamination can consist of the presence of combustible or explosive material, reduction of the oxygen content of the air supply, or that which interferes with the operation of combustion equipment or instrumentation by such mechanisms as pluggage. While contamination from adjacent processes has always been a consideration in industrial applications, the use of emission control equipment has added new possible sources of contamination to the boiler environment.

A.4.7.7 Many factors affect the classification of the igniters, including the characteristics of the main fuel, the combustion chamber and the burner design, and the igniter capacity and location relative to the main fuel burner.

A.4.7.7.9 This procedure results in extended turndown range when Class 1 igniters are in service and flame is proved.

A.4.7.8.4 The designer is cautioned that, when boilers or HRSGs share a common component between the furnace outlet and the stack, a positive pressure at the tie-in point could create a reverse flow into a nonoperating unit when at least one unit is in operation.

A.4.9.1 Atmospheric vent valves located between shutoff valves are intended to relieve any gas pressure that builds up due to failure of the first (upstream) shutoff valve. This precaution minimizes the potential for leakage into an idle furnace or HRSG. To perform properly, these valves should be large enough to relieve gas to the atmosphere at a rate equal to the potential leakage rate. In the absence of other justification, vent pipe sizes should conform to Table 4.9.2. Special precautions should be taken to vent heavier-than-air gases safely.

A.4.10.3 Flue gas path auxiliary systems include but are not limited to sulfur burner systems, ammonia injection systems, activated carbon injection systems, soot blowing or soot cleaning systems, electrostatic precipitators, and fired reheater systems. Sulfur burner systems are used primarily to improve the collection efficiency of electrostatic precipitators. Ammonia injection systems can be used to improve the collection efficiency of electrostatic precipitators or as a reagent to provide a reduction in NO_x emissions in either SCR or selective noncatalytic reduction (SNCR) systems. Activated carbon injection systems are used primarily to provide a reduction in mercury emissions. Soot blowing or soot cleaning systems are used to improve heat transfer and include water- and steam-based systems as well as acoustic systems, the acoustic energy of which can be developed by compressed air or pulsed combustion equipment.

A.4.11 Utilizing the equivalency provision in Section 1.5, an alternative design to meet the requirements of the code can be accomplished where all the following are provided:

(1) Approval of the authority having jurisdiction.
(2) A documented hazard analysis that addresses all the requirements of this code.
(3) A documented life-cycle system safety analysis that addresses all requirements of this code and incorporates the appropriate application-based safety integrity level (SIL) for safety instrumented systems (SIS). One methodology for achieving a life-cycle system safety analysis is to use a process that includes SIL determination and a SIS design and implementation consistent with the ISA 84 standard series.

The designer or designers have the responsibility to ensure that all the hazards identified in this code are adequately addressed in the alternative design.

It should be noted that the intent of the independence requirements in 4.11.7.1 through 4.11.7.7 of this code include the following:

(1) Separating the burner management system from other systems to reduce the risk of human errors
(2) Providing layers of protection and security to reduce risk by having dedicated protection functions in the burner management system
(3) Reducing risks through elimination of common mode failures
(4) Providing protective features that independently limit process parameters that complement other control systems

A.4.11.1 Some items are not applicable to specific types of logic systems (e.g., relay).

A.4.11.4 The primary concern is alarm conditions that pose a threat of impending or immediate hazards.

Copyright 2014 National Fire Protection Association (NFPA). Licensed, by agreement, for individual use and download on October 4, 2014 to LEADER and READER for designated user PATTARAPORN SRITRAKOOL. No other reproduction or transmission in any form permitted without written permission of NFPA. For inquires or to report unauthorized use, contact licensing@nfpa.org.

A.4.11.6 Logic systems include, among others, programmable logic controllers (PLCs), digital processing units (DPUs), and distributed control systems (DCSs).

A.4.11.6(10) Watchdog timers as defined in 3.3.169 are one of the possible means to implement monitoring of the logic system for failure.

A.4.11.7 See A.4.11.

A.4.11.7.2(1) An independent fuel-air ratio control can consist of a mechanical positioning–type, pressure balance ratio control, or similar system.

A.4.11.7.7 Signals that initiate mandatory master fuel trips originate directly from hardwired interlocks or from signals developed by the burner management system logic. The required operator-initiated trip (e.g., pushbutton or manual switch) is required to be hardwired directly to the master fuel trip relay and can be wired as an input to the burner management system logic as well.

A.4.12.3.4 Methods and equipment used to reduce the emission of air pollutants affect the burner flame, selection of the flame detector, and location/sighting of the flame detector.

A.4.13 Users of this code are encouraged to use judgment in the application of the following guidelines for all process and safety functions contained in a distributed control system.

(1) For data transmission, the following should be considered:
   (a) Every input should be sampled at intervals of no more than 1 second. Every output should be updated at intervals of no more than 1 second.
   (b) For protective actions, the system should be able to convert a changed input sensor value to a completed output control action in less than 25 milliseconds.
   (c) Changes in displayed data or status should be displayed within 5 seconds.
   (d) Data acquisition and transmission systems should be protected from noise pickup and electrical interference.
   (e) In redundant systems, the data links should be protected from common mode failures. Where practicable, redundant data links should be routed on separate paths to protect against physical damage that disables both data links.

(2) For hardware, the following should be considered:
   (a) The hardware selected should have adequate processor capacity to perform all the functions required for start-up sequencing, normal operation alarming, monitoring, and shutdown of the controlled equipment. Capacity also should be available for data storage and sorting; this capacity can be permitted to be located in a separate processor.
   (b) Selection should take into consideration the requirements for reliability, maintainability, and electrical classification.
   (c) The hardware should provide for automatic tracking between automatic and manual functions to allow for immediate seamless transfer.
   (d) The hardware should be capable of stable dynamic control.
   (e) The hardware should be capable of thorough self-diagnosis.
   (f) Consideration should be given to all levels and types of electrical interference that can be tolerated by the hardware without compromising its reliability or effectiveness.
   (g) Fail-safe operation should be obtained through a thorough and complete analysis of each control loop and by providing for a failure of that loop (i.e., valve/actuator) to cause a fail-safe position.

(3) For software, the following should be considered:
   (a) The software package should be designed to include all logic to provide a safe and reliable control system. When the software calls for the operation of a field safety device, a feedback signal should be provided to prove that the requested operation has taken place, and an alarm should be actuated if the action is not confirmed in a specified amount of time.
   (b) The software package should be checked to ensure that no unintended codes or commands are present (e.g., viruses or test breaks). The software package should be tested and practiced before being loaded into the plant site computers or processors.
   (c) The software system should be protected from inadvertent actions by operators and should be tamperproof.
   (d) Written procedures should specify the functions that can and cannot be accessed by the operator and those functions that require additional authorization for access.
   (e) The software should be permitted to provide for authorized on-line changes of the timers and set points, provided the safety of the operating equipment is not compromised.
   (f) The software should implement and enhance the self-diagnostic hardware.

A.4.13.1.3 Combustion control system design is addressed in ANSI/ISA 77.41.01, *Fossil Fuel Power Plant Boiler Combustion Controls*. The combustion control system is one of the components of the overall boiler control system. Other components of the boiler control system are addressed by the following standards: ANSI/ISA 77.42.01, *Fossil Fuel Power Plant Feedwater Control System — Drum Type*; ANSI/ISA 77.43.01, *Fossil Fuel Power Plant Unit/Plant Demand Development — Drum Type*; and ANSI/ISA 77.44.01, *Fossil Fuel Power Plant Steam Temperature Controls*.

A.4.13.2.1 The minimum purge rate airflow and minimum operating airflow value is based on historical experience in reducing the occurrence of explosions. This value is based on safety considerations and could be in conflict with economic considerations or emission limits. Factors considered in establishing the minimum airflow include the following:

(1) Removal of combustibles and products of combustion
(2) Cooling requirements for burners that are out of service
(3) Accuracy of total burner airflow, individual burner airflow, and other airflow measurements
(4) Accuracy of burner air and main burner fuel distribution
(5) Effects of thermal and pressure transients within the combustion chamber on the air and main burner fuel flows
(6) Impact of air leakage
(7) Wear and deterioration of the unit and equipment
(8) Operational and control margins

A.4.13.2.10 Continuous on-line analysis of the oxygen, combustibles, and carbon monoxide content of the flue gas stream are valuable tools for use as an operating guide and for control.

Copyright 2014 National Fire Protection Association (NFPA). Licensed, by agreement, for individual use and download on October 4, 2014 to LEADER and READER for designated user PATTARAPORN SRITRAKOOL. No other reproduction or transmission in any form permitted without written permission of NFPA. For inquires or to report unauthorized use, contact licensing@nfpa.org.

Caution should be exercised in the interpretation of combustibles meter indications. Many meters and associated sampling systems measure only gaseous combustibles. Therefore, the lack of meter indication of combustibles should not be proof that unburned particles or other combustibles are not present.

A.4.13.3.3 HRSGs maintain a minimum of 25 percent combustion turbine exhaust flow, beyond which there is no automatic control of airflow.

A.4.15.1.1 For single burner boilers, continuous trend display can include steam flow, fuel flow, drum or water level, steam pressure, and, where measurement is available, the furnace draft and airflow. When the main control for combustion control uses metered air-fuel ratio, the fuel flow and air flow should be available to the operators to ensure proper operation.

A.4.15.5 A sequence of events recorder, where provided, should time-tag events with a resolution of 10 milliseconds or less.

A.4.16 Some authorities having jurisdiction require the installation of selective catalytic reduction systems in some boiler or HRSG systems to reduce the emissions of NO_x. Because such a system has a narrow range of optimum operating temperatures and is subject to maximum temperature limitations lower than many combustion turbine full-load exhaust temperatures or furnace exit gas temperatures, it usually is installed between the economizer outlet and the air preheater inlet for boilers or between heat transfer surfaces in a HRSG.

The chemical process of reduction necessitates the addition of ammonia to reduce NO_x to nitrogen and water in the presence of the catalyst. In addition, if the fuel contains sulfur, a reaction that results in the formation of ammonium bisulfate can occur. This material tends to deposit both on the catalyst and on metallic surfaces downstream of the reactor section, primarily at low temperatures.

Although troublesome in terms of corrosion, fouling, and material life, ammonium bisulfate does not directly affect flame safety. It is common practice to use either anhydrous or aqueous ammonia as the reducing agent in a selective catalytic reduction (SCR) system. Ammonia-on-demand (urea) systems generate ammonia in the anhydrous form. These chemicals (aqueous ammonia and anhydrous ammonia) are not interchangeable, and a specific system design is needed depending on the form used at a particular installation. Both forms, on release, are considered a potential health hazard. Ammonia gas is flammable in air at concentrations between 16 percent and 25 percent by volume. Such concentrations usually are not encountered. The system should provide the necessary features to ensure that such concentrations cannot occur during abnormal conditions.

Due to the corrosive nature of ammonia, material selection is an important consideration. Aqueous ammonia usually is stored in a closed vessel to prevent the release of vapor. Such vessels are designed for low [less than a gauge pressure of 344.7 kPa (50 psi)] pressures and only approach the design pressure under high ambient temperature conditions. Anhydrous ammonia is stored in a concentrated liquid-vapor form in closed vessels. Under ambient temperature conditions, pressures higher than those observed with aqueous ammonia can result.

Precautions should be taken in the selection of a storage area for ammonia, because the pressure in storage vessels can rise significantly when they are exposed to elevated temperatures. Vessels built in accordance with the ASME *Boiler and Pressure Vessel Code* are required.

A.5.3.1 See Figure A.5.3.1 for typical main oil burner system arrangement.

A.5.3.2 For additional information, see NFPA 54, *National Fuel Gas Code*, and NFPA 58, *Liquefied Petroleum Gas Code*.

A.5.3.2.3 *Main burner gas supply.* Special precautions are required in locating the vent pipe from the automatic bleed valve so that heavier-than-air, vented gases do not accumulate in depressions or in confined areas. An alternative to the automatic venting of heavier-than-air gases is to eliminate the main vent valve from between the two main safety shutoff valves. See Figure A.5.3.2.3 for a typical main gas burner system arrangement.

A.5.3.2.3.1 It is recommended that valve proving be done at burner shutdown to establish that the gas shutoff valves are tight.

A.5.3.4.1 See Figure A.5.3.4.1 for typical ignition system arrangements for a gas- or oil-fired burner.

A.5.3.4.1.1.3(A) The purpose of this requirement is to ensure that the main flame is self-supporting, is stable, and is not dependent on ignition support from the igniter.

A.5.3.4.1.3 For heavier-than-air gases and gas-fired igniters, many oil-fired boilers are equipped with propane or other liquefied petroleum gas (LP-Gas)–fired igniters. Special precautions are required in locating the vent pipe from the automatic bleed valve so that heavier-than-air, vented gases do not accumulate in depressions or in confined areas. An alternative to the automatic venting of heavier-than-air gases is to eliminate the igniter vent valve from between the two igniter safety shutoff valves. *(See Figure A.5.3.4.1.)*

A.5.3.4.1.3.1 It is recommended that valve proving be done at burner shutdown to establish that the gas shutoff valves are tight.

A.5.3.4.2.2.2 Such transients are generated by burner control valves, dampers, and other equipment that operate at speeds faster than the speed of response of other components in the system.

A.5.3.4.6.1 Tall stacks can produce furnace draft conditions that adversely affect flame stability and could require special draft control provisions.

A.5.3.4.6.3 Analyzers could contain heated elements that exceed the autoignition temperature of many fuels. Zirconium oxide analyzers, commonly used for oxygen analysis, contain an element heated to 1300°F (704°C). This high temperature element presents a potential ignition source to unburned fuel that could be present at startup. Some analyzers are designed to protect the sampled space from the ignition source by providing flashback protection (such as flame arresters in the sample gas path). Analyzers with that protection or that are not heated to autoignition temperature do not present an ignition hazard.

A.5.3.5 The American Boiler Manufacturers Association publication ABMA 307, *Combustion Control Guidelines for Single Burner Firetube and Watertube Industrial/Commercial/Institutional Boilers*, contains additional information on this subject.

Copyright 2014 National Fire Protection Association (NFPA). Licensed, by agreement, for individual use and download on October 4, 2014 to LEADER and READER for designated user PATTARAPORN SRITRAKOOL. No other reproduction or transmission in any form permitted without written permission of NFPA. For inquires or to report unauthorized use, contact licensing@nfpa.org.

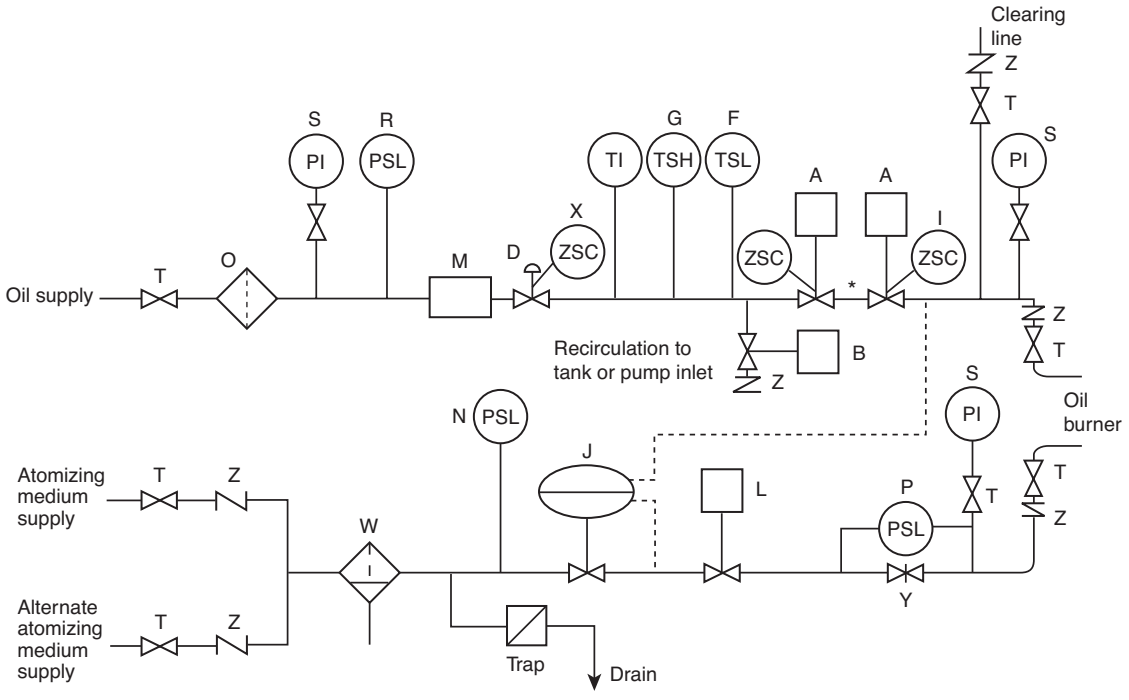

* Caution: Refer to the requirements of 5.3.1.9 and 5.3.1.10.

A Safety shutoff valve, spring closing (normally closed, de-energized)
B Oil recirculation valve atomizing (normally open, de-energized) (optional for unheated oil)
D Oil flow control valve
F Low oil temperature switch (not applicable for unheated oil)
G High oil temperature switch (not applicable for unheated oil)
I Closed position interlock on safety shutoff valve
J Atomizing medium differential control valve
L Automatic atomizing medium shutoff valve
M Oil meter (optional)
N Low atomizing medium pressure switch
O Oil strainer
P Atomizing medium flow interlock differential switch, or pressure interlock switch
R Low pressure switch
S Pressure gauge
T Manual shutoff valve
U Oil temperature gauge (optional for unheated oil)
W Atomizing medium strainer
X Low fire start switch
Y Atomizing medium flow orifice
Z Check valve

Safety shutdown interlocks (not shown)

Flame detector(s)
Excessive steam pressure interlock
Auxiliary low water cutoff (one required)
Combustion air supply interlock

FIGURE A.5.3.1 Typical Fuel and Atomizing Medium Supply Systems and Safety Controls for Oil Burner.

A.5.3.5.3 Consideration should be given to the effects of fuel and air pressure and temperature fluctuations as related to the airflow and the performance of the fuel flowmeter in regulating the air-fuel ratio.

A.5.3.6.5 The use of safety control circuit voltages of greater than 120 volts nominal is not recommended.

A.5.3.8.1 Locations at which natural gas, propane, or fuel oil systems are installed in compliance with this code normally are not considered hazardous locations for electrical equipment as defined in *NFPA 70, National Electrical Code*.

A.5.3.9 The special problems of low NO_x operation include the following:

(1) Air pollution control regulations require that new installations meet NO_x emission limits that are lower than emissions now obtained from many of the currently installed firing systems and furnace designs that are using past operating procedures. In addition, air quality regulations in some local areas require a reduction of NO_x emissions from existing boilers.

(2) To achieve those reductions, one or more of the following methods should be used:
   (a) Low excess air firing (i.e., less than the "normal" 10 percent to 25 percent excess air)
   (b) Multistage air admission, involving the introduction of combustion air in two or more stages partly at the fuel nozzle, which could be less than stoichiometric air, and partly by independent admission through special furnace ports; and a second stage of air admission within the same burner housing
   (c) Flue gas recirculation into all or a portion of the secondary air
   (d) Reduced secondary air temperature
   (e) Fuel staging
   (f) On new units, introduction of new burner and furnace designs by equipment manufacturers

(3) Generally, the effect of all these methods is to produce lower flame temperatures and longer, less turbulent flames, which result in lower NO_x.

Copyright 2014 National Fire Protection Association (NFPA). Licensed, by agreement, for individual use and download on October 4, 2014 to LEADER and READER for designated user PATTARAPORN SRITRAKOOL. No other reproduction or transmission in any form permitted without written permission of NFPA. For inquires or to report unauthorized use, contact licensing@nfpa.org.

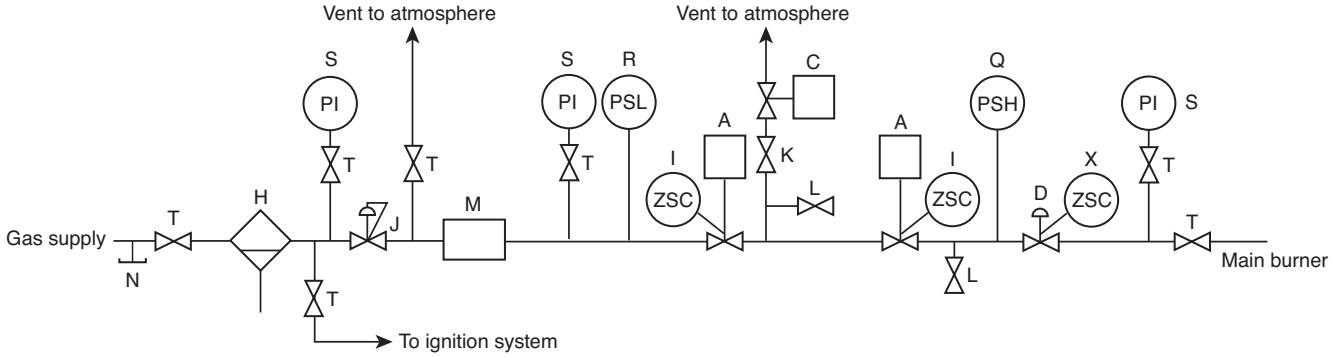

A Safety shutoff valve, spring closing (normally closed, de-energized)
C Vent valve, spring opening (normally open, de-energized)
D Gas flow control valve
H Gas strainer
I Closed position interlock on valve safety shutoff
J Constant gas pressure regulator valve
K Vent line manual shutoff valve for leakage testing (locked or sealed open)
L Leakage test connection
M Gas meter (optional)
N Drip leg
Q High gas pressure switch
R Low gas pressure switch
S Pressure gauge
T Manual shutoff valve
X Low fire start switch

Safety shutdown interlocks (not shown)

Flame detector(s)
Excessive steam pressure interlock (excessive water temperature and pressure interlock for hot water boilers)
Auxiliary low water cutoff (one required)
Combustion air supply interlock

FIGURE A.5.3.2.3 Typical Fuel Supply Systems and Safety Controls for Gas Burner.

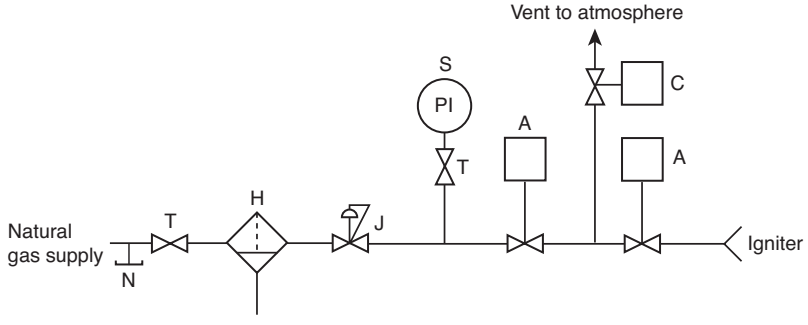

A Safety shutoff valve, spring closing (normally closed, de-energized)
C Vent valve, spring opening (normally open, de-energized) (optional)
H Gas strainer
J Constant gas pressure regulator
N Drip leg
S Pressure gauge
T Manual shutoff valve

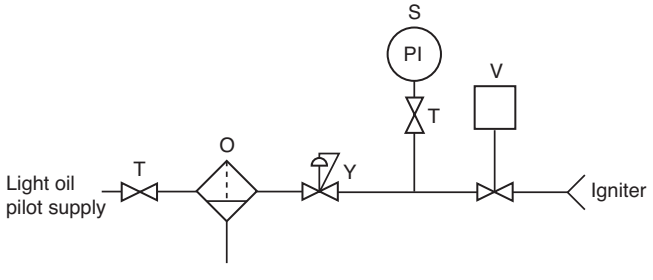

O Igniter oil strainer
S Pressure gauge
T Manual shutoff valve
V Pilot oil safety shutoff valve, spring closing (NC)
Y Pilot oil pressure regulator (optional)

FIGURE A.5.3.4.1 Typical Ignition Systems for Gas- or Oil-Fired Burner.

Copyright 2014 National Fire Protection Association (NFPA). Licensed, by agreement, for individual use and download on October 4, 2014 to LEADER and READER for designated user PATTARAPORN SRITRAKOOL. No other reproduction or transmission in any form permitted without written permission of NFPA. For inquires or to report unauthorized use, contact licensing@nfpa.org.

The hazards of low NO_x firing methods include the following:

(1) The following methods have important implications with regard to furnace safety, particularly for existing units, and could introduce unacceptable risks if proper precautions are not taken:
   (a) Fuel-firing systems that are designed to reduce NO_x emissions tend to reduce the margins formerly available to prevent or minimize accumulations of unburned fuel in the furnace during combustion upsets or flameouts. Thus, it is important to trip fuel on loss of flame.
   (b) These methods can narrow the limits of stable flames that are produced by the burner system. The tests, which are specified in 5.3.4.2.2, should be repeated on existing units when any of these methods is employed.
   (c) When flue gas recirculation is used, equipment should be provided to ensure proper mixing and uniform distribution of recirculated gas and the combustion air. When flue gas recirculation is introduced into the total combustion air stream, equipment should be provided to monitor either the ratio of flue gas to air or the oxygen content of the mixture. When flue gas recirculation is introduced so that only air and not the mixture is introduced at the burner, proper provisions should be made to ensure the prescribed distribution of air and the recirculating flue gas–air mixture.
   (d) All the methods tend to increase the possibility of an unstable flame and unburned combustibles throughout the unit and ducts. Therefore, recommendations of the boiler, burner, and instrument manufacturers should be followed, or tests should be conducted to verify operating margins.

(2) Any change in flame characteristics to reduce NO_x emissions can require changing either or both the type and the location of flame detectors on existing units.

A.5.4.3.1.2 See Figure A.5.3.1 for a diagram of a typical design for alternate atomizing air supply.

A.5.5.1 *Manual systems for watertube boilers.* It is recognized that with adequate and uninterrupted supplies of fuel and air, certain operating functions can be performed by a trained operator as well as by control devices. Typical controls and interlocks provided on a manual system include the following:

(1) Class 2 or Class 3 igniters.
(2) Safety shutoff valves, as follows:
   (a) *Gas firing:* two automatic spring-closing safety shutoff valves in the gas line to the main burner, with intermediate spring opening automatic vent valve
   (b) *Oil firing:* two automatic spring-closing safety shutoff valves in the oil line to the burner
   CAUTION: Means should be provided to prevent or relieve excess pressure between these valves.
   (c) *Gas-fired igniter:* two spring-closing automatic safety shutoff valves in the gas line to the igniter, with intermediate, spring-opening automatic vent valve
(3) Manual shutoff valve(s) in the fuel line(s) adjacent to the burner. For gas firing, the shutoff valves should be proved closed before the spark to the igniter can be energized and the igniter and main gas safety shutoff valves can be opened.
(4) Changes in firing rate are made by the simultaneous adjustment of fuel and air supplies at a pre-established, optimum air-fuel ratio by the manipulation of a single control device.
(5) Limits on fuel and air to prevent reducing the furnace input below the point of stable burner operation are provided. The minimum and maximum points of stable burner operation are defined by the burner manufacturer and verified by operating investigation.
(6) Safety shutdown interlocks include the following:
   (a) Low oil pressure
   (b) High gas pressure
   (c) Low gas pressure
   (d) Loss of combustion air supply

   CAUTION: Excessive recycling to achieve a burner light-off could lead to accumulation of a hazardous amount of fuel in the furnace and should be avoided.
(7) Where oil heating is provided, the following conditions sound an alarm:
   (a) Low oil temperature
   (b) High oil temperature

A.5.5.2.6.2.1(1) For ultraviolet flame detection systems, it is recommended that early spark termination be used.

A.5.5.2.6.2.2(1) For ultraviolet flame detection systems, it is recommended that early spark termination be used.

A.5.5.2.6.2.3(1) For ultraviolet flame detection systems, it is recommended that early spark termination be used.

A.5.5.2.6.4.3 Supplemental recommendations and precautions include the following:

(1) *High oil burner pressure protection.* In addition to the requirements in 5.5.2.6.4.3(A), it is recommended that an evaluation be performed to determine the need for protection against high oil burner pressure.
(2) *Recovering from a fuel-rich furnace condition.* If an air deficiency develops while flame is maintained at the burners, the fuel should be reduced until the normal air-fuel ratio has been restored. If fuel flow cannot be reduced, airflow should be increased slowly until the normal air-fuel ratio has been restored.
(3) *Fuel quality.* It should be recognized that fuels that are available today contain unexpected constituents. Therefore, engineering systems and material designs must take into consideration such potential variables.

A.5.5.4.2.2(1) For ultraviolet flame detection systems, it is recommended that early spark termination be used.

A.5.5.4.2.4.4 Supplemental recommendations and precautions include the following:

(1) *High oil burner pressure protection.* In addition to the requirements in 5.5.4.2.4.4(A), it is recommended that an evaluation be performed to determine the need for protection against high oil burner pressure.
(2) *Recovering from a fuel-rich furnace condition.* If an air deficiency develops while flame is maintained at the burners, the fuel should be reduced until the normal air-fuel ratio has been restored. If fuel flow cannot be reduced, airflow should be slowly increased until the normal air-fuel ratio has been restored.
(3) *Fuel quality.* It should be recognized that fuels that are available today contain unexpected constituents. Therefore, engineering systems and material designs must take into consideration such potential variables.

A.5.5.6.4 In addition to the requirements in 5.5.6.4, it is recommended that an evaluation be performed to determine the need for protection against high oil burner pressure.

Copyright 2014 National Fire Protection Association (NFPA). Licensed, by agreement, for individual use and download on October 4, 2014 to LEADER and READER for designated user PATTARAPORN SRITRAKOOL. No other reproduction or transmission in any form permitted without written permission of NFPA. For inquires or to report unauthorized use, contact licensing@nfpa.org.

A.5.6.1 In addition to the hazards related to gas firing alone and to oil firing alone, which are described in Annex K, simultaneous firing of gas and oil increases the potential for the following hazardous conditions:

(1) A fuel-rich condition
(2) An abrupt change in the air-fuel ratio
(3) Overfiring of a boiler

A.5.6.5.3 In addition to the requirements in 5.6.5.3, it is recommended that an evaluation be performed to determine the need for protection against high oil burner pressure.

A.5.7.1 In addition to the hazards related to gas firing alone and to oil firing alone that are included in Annex K, simultaneous firing of gas and oil for transfer increases the potential for the following hazardous conditions:

(1) A fuel-rich condition
(2) An abrupt change in the air-fuel ratio
(3) Overfiring of a boiler

A.5.8.1 In addition to the hazards related to oil firing alone that are included in Annex K, the changeover from one oil atomizer to an auxiliary oil atomizer and back increases the potential for the following hazardous conditions:

(1) A fuel-rich condition
(2) An abrupt change in the air-fuel ratio

Care should be taken to prevent a fuel-rich condition during the changeover period.

A.6.2.3 No code guarantees the elimination of furnace explosions and implosions in multiple burner boilers. Technology in this area is evolving constantly, which is reflected in revisions to this code.

A.6.4.1 Unattended operation of larger units is not recommended.

A.6.4.2.1.3 The mandatory automatic trips specified in 6.4.2.3 represent that portion of automatic trips for which sufficient experience has been accumulated to demonstrate a high probability of successful applications for all units. The use of additional automatic trips, while not mandatory, is recommended.

A.6.4.2.1.6 Not all conditions conducive to a furnace explosion or implosion are detected by the mandatory automatic trip devices, even if the devices are adjusted and maintained in accordance with the manufacturer's instructions and as required by this code.

A.6.4.2.3.1 In block 8 of Table 6.4.2.3.1(a), the partial loss of flame described is potentially more hazardous at lower load levels. The decision regarding specific requirements or implementation of this trip should be a design decision based on furnace configuration, total number of burners, number of burners affected as a percentage of burners in service, arrangement of burners affected, interlock system, and load level. This trip is interlocked through flame supervisory equipment.

In block 9 of Table 6.4.2.3.1(a), the tables referenced describe the allowable differences in operating procedures based on the classification of igniter being used. The following descriptions of conditions are typical for both Table 6.4.2.3.1(b) and Table 6.4.2.3.1(c).

(1) *Condition 1:* An event in which, after a successful boiler purge, an attempt(s) to place the first igniter in service fails
(2) *Condition 2:* An event in which an igniter(s) has been proven in service and subsequently all igniters are shut down without the attempt ever having been made to place a burner or pulverizer in service
(3) *Condition 3:* An event in which gas and/or oil fuel burners were started or attempted to be started and all burner valves were subsequently closed while igniters remain proven in service
(4) *Condition 4:* An event in which a pulverizer system(s) was started up or attempted to be started up and subsequently all pulverizer systems were shut down while igniters remain proven in service
(5) *Condition 5:* An event in which any fuel has been placed in service and all fuel subsequently shut off

In the event that any main fuel is shut down while any other main fuel remains proven in service, the all-fuel-off master fuel trip requirements do not apply.

In block 10 of Table 6.4.2.3.1(a), low drum water level has been included as a master fuel trip. Although low drum water level is not a combustion-related hazard, NFPA 85 is the primary resource for identifying BMS requirements, and not including a low drum level trip in Figure 6.4.2.3.1 has created confusion with users of this code. A master fuel trip based on low drum water level for drum-type boilers is commonly recognized good engineering practice.

A.6.4.2.3.4.3(B) Immediate or fast airflow changes are not allowed following an emergency shutdown, due to the likelihood of creating an air-fuel ratio outside the manufacturer's required limits in some sections of the unit before all the combustibles have exited the unit.

A.6.4.2.3.4.3(C) A hold period prior to re-starting the fans allows the boiler setting to cool. In-leakage will promote further cooling, and suspended particles will settle.

A.6.4.2.3.4.4(A) Design full load mass air flow is the flow required to achieve full load on the original design fuel as defined by the boiler original equipment manufacturer.

A.6.4.2.3.4.4(B) Fuel gas– and fuel oil–fired units are permitted to have purge rate airflows above 40 percent. The designer is cautioned, however, that a mandatory automatic master fuel trip is required by 6.6.5.2.5.2, 6.7.5.2.5.2, and 6.8.5.2.5.2 at any airflow 5 percent or more below minimum purge rate airflow for any fuel. For example, if minimum purge rate airflow is established by the designer at 35 percent, the furnace will not be permitted to be operated with airflow below 35 percent, and a mandatory automatic master fuel trip is required at 30 percent airflow. The operator is cautioned that purging at higher airflow rates than minimum purge airflow requires the higher airflow be maintained for light-off.

A.6.4.2.3.4.5 The status of boiler enclosure purge permissives should be indicated.

A.6.4.2.3.4.6 The status of component purge permissives should be indicated.

A.6.4.2.3.4.6(2) Analyzers could contain heated elements that exceed the autoignition temperature of some fuels. Zirconium oxide analyzers, commonly used for oxygen analysis, contain an element heated to 1300°F (704°C). This high temperature element presents a potential ignition source to unburned fuel that could be present at startup. Some analyzers are designed to protect the sampled space from the ignition source by providing flashback protection (such as flame arresters in sample gas path). Analyzers with that protection or that are not heated to autoignition temperature do not present an ignition hazard.

Copyright 2014 National Fire Protection Association (NFPA). Licensed, by agreement, for individual use and download on October 4, 2014 to LEADER and READER for designated user PATTARAPORN SRITRAKOOL. No other reproduction or transmission in any form permitted without written permission of NFPA. For inquires or to report unauthorized use, contact licensing@nfpa.org.

A.6.4.2.3.4.7 Indications should be provided for Boiler Enclosure Purge Required, Boiler Enclosure Purge In Progress, and Boiler Enclosure Complete.

A.6.4.2.3.4.7(A) The volume of downstream components should not be included in the calculation of volume changes required to meet the requirements of the boiler enclosure purge.

A.6.4.2.3.4.8 Indication should be provided for Purge Required, Purge In Progress, and Purge Complete for each component requiring purge.

A.6.4.2.3.4.8(C) The intent of the parallel purge is to require the shortest safe purge time for each potential source of ignition. For example, if a 5-minute boiler enclosure purge and a 7-minute precipitator purge are required, the igniters could be lit 5 minutes after purge conditions are met, but the precipitator would be required to wait 2 additional minutes before being energized.

A.6.4.2.3.6.1 Variable speed and axial flow fans require special provisions.

A.6.4.2.3.6.5 A short time delay might be necessary to prevent tripping on rapid transients that do not present a hazard.

A.6.4.2.3.7.1 Variable speed and axial flow fans require special provisions.

A.6.4.2.3.7.5 A short time delay might be necessary to prevent tripping on rapid transients that do not present a hazard.

A.6.4.2.3.7.6 A short time delay might be necessary to prevent tripping on rapid transients that do not present a hazard.

A.6.4.2.3.9.2(3) Several means are available to indicate loss of coal feed to the pulverizer, loss of coal stored within the pulverizer, and loss of coal input to the burners. At least one of these means, but preferably a combination, must be used to indicate loss of coal.

The conditions under which the igniters are to ignite the input should be established before restarting the feeder. *(See 6.8.5.3.3.)*

A.6.4.2.3.10(8) This signal should be based on steam flow, main fuel flow, turbine load, burners in service, or any combination thereof, or on other means to ensure that temperatures in the reburn zone are greater than the autoignition temperature of the reburn fuel.

A.6.4.2.3.11 Flue gas or catalyst temperature outside specified limits is a recommended but not mandatory interlock. Operating with such temperatures outside the design range can be detrimental to downstream components or to the environment. Consideration should be given to providing interlocks for ammonia in air concentrations greater than 9.6 percent in the ammonia feed system. The lower explosive limit (LEL) for ammonia in air is 16 percent. NFPA 69, *Standard on Explosion Prevention Systems*, requires that for an interlocked system concentrations of this type be held below 60 percent of the LEL, which in this case is 9.6 percent. *(See 5.7.2.5 and 5.7.2.7 of* NFPA 69, *Standard on Explosion Prevention Systems.)*

A.6.4.2.3.12.1(5) Some duct burner designs might require a duct burner trip on partial loss of flame.

A.6.4.3.1.1 The functional requirement of any alarm system should be to bring a specific condition to the attention of the operator.

A.6.4.3.2 It is recommended that provisions be made in the design for possible future conversion to automatic trips in the interlock system. Additional alarms and monitors are recommended. In addition to the required alarms, the following alarms are recommended to indicate abnormal conditions and, where applicable, to alarm in advance of an emergency shutdown:

(1) *Burner register closed.* This alarm provides control room indication or alarm for the condition that all secondary air burner dampers are closed on an operating burner.
(2) *Combustibles or carbon monoxide (high).* This alarm warns the operator of a possible hazardous condition by alarming when measurable combustibles are indicated and by providing a second alarm when combustibles reach a dangerous level.
(3) *Oxygen (low).* This alarm warns the operator of a possible hazardous condition.
(4) *Flue gas analyzer failure.* This alarm warns the operator that some failure has occurred in the detection or sampling system and that the associated reading or alarms cannot be trusted.
(5) *Change in calorific content of the fuel gas.* In the event that the gas supply is subject to heating value fluctuations in excess of 1863 kJ/m^3 (50 Btu/ft^3), a meter in the gas supply or an oxygen meter on the flue gas should be provided.
(6) *Air-fuel ratio (high and low).* If proper metering is installed, this alarm can be used to indicate a potentially hazardous air-fuel ratio with an alarm indicating approach to a fuel-rich condition and a second alarm indicating approach to a hazardous fuel-rich condition.
(7) *Flame detector trouble.* This alarm warns the operator of a flame detector malfunction.
(8) *Main oil viscosity (high).* If the viscosity of the fuel supply is variable, it is recommended that a viscosity meter be used to provide the alarm. Interlocking to trip on high viscosity also should be considered in such cases.
(9) *Ignition fuel supply pressure (low).* The ignition fuel supply pressure should be monitored at a point as far upstream of the control and safety shutoff valves as practicable.
(10) *Main oil temperature (high).* This alarm is used for heated oils only.
(11) *No load on pulverizer.* This alarm warns when the pulverizer-indicated coal load is substantially below normal and the feeder is running.
(12) *Pulverizer overload.* This alarm warns when the pulverizer-indicated coal load is above the normal range.

Monitors of furnace conditions include the following:

(1) *Furnace television.* A properly designed and installed furnace television can be of significant value as a supplementary indication of flame and other conditions in some furnace designs. It is of particular value during start-up in viewing igniters and individual burners for proper ignition. This is an aid to, but not a substitute for, visual inspection.
(2) *Flame detector indication.* This television monitor provides a means for operator observation of flame detector output signal strength.

A.6.5.1 No code can guarantee the elimination of furnace implosions. Section 6.5 provides a balance between the complications of reinforcement of equipment and the limitations and reliability of operating procedures, control systems, and interlocks to minimize the occurrence of the conditions leading to furnace implosions.

Copyright 2014 National Fire Protection Association (NFPA). Licensed, by agreement, for individual use and download on October 4, 2014 to LEADER and READER for designated user PATTARAPORN SRITRAKOOL. No other reproduction or transmission in any form permitted without written permission of NFPA. For inquires or to report unauthorized use, contact licensing@nfpa.org.

If worst-case conditions are assumed (e.g., cold air, high head–ID fan, FD fan flow shutoff, ID control dampers open with ID fan operating), the furnace cannot be protected by reasonable structural design.

By using the provisions outlined in Section 6.5, the likelihood of furnace damage is remote, provided the ID fan has reasonable head capability. If the ID fan head capability is increased significantly, special consideration should be given to ID fan characteristics, special duct arrangements, or special instrumentation or control.

A.6.5.1.3 The transient internal design pressures defined in 6.5.1.3 should be taken into consideration in the design of the airflow and gas flow path from the FD fan discharge through the stack.

A.6.5.1.3.2.1 Examples: If the test block capability of the FD fan at ambient temperature is +6.2 kPa (+25 in. of water), then the minimum positive design pressure is +6.2 kPa (+25 in. of water). If the test block capability of the FD fan at ambient temperature is +9.9 kPa (+40 in. of water), then the minimum positive design pressure is +8.7 kPa (+35 in. of water).

CAUTION: Furnace design pressure greater than those specified in 6.5.1.3.2.1 could result in a more severe energy release of the furnace enclosure if a fuel explosion occurs.

A.6.5.1.3.2.2 The ID fan head capability increases due to significant draft losses beyond the air heater or for other reasons, such as excessive ID fan test block margins. Where the ID fan test block capability is more negative than –8.7 kPa (–35 in. of water), consideration should be given to an increased negative design pressure. Examples: If the test block capability of the ID fan at ambient temperature is –3.7 kPa (–15 in. of water), then the minimum negative design pressure is –3.7 kPa (–15 in. of water). If the test block capability of the ID fan at ambient temperature is –9.9 kPa of water (–40 in. of water), then the minimum negative design pressure is –8.7 kPa (–35 in. of water).

A.6.5.2.2.1(4) A typical method for preventing or minimizing furnace pressure excursions is to apply fan override action. Often used in conjunction with this fan override action is directional blocking, which prevents the furnace pressure regulating control element(s) from moving in a direction that would aggravate an existing furnace pressure error.

A.6.5.2.3(1) Excessive speed can cause undesirable hunting and overshooting of automatic controls and create damaging negative pressure transients downstream. Excessive speed also might be unsuitable for manual control.

Where variable speed or axial fans are used, the rate of response is slower than with constant speed centrifugal fans, and special consideration must be given to the design of the furnace draft control system to ensure a satisfactory rate of response.

A.6.5.3.2 One method of achieving the open-flow air path with common downstream equipment is to maintain the common point below atmospheric pressure whenever at least one boiler is in operation. This reduces the risk of hot flue gas from operating unit(s) flowing back into nonoperating unit(s) and permits establishing an open-flow path from the FD fan inlet of the nonoperating boiler(s) to the common point in accordance with the requirements of Chapter 6.

A.6.5.3.2.3 Units might be equipped with downstream equipment that restricts flue gas or air flow. With this arrangement, stack effect and any associated draft can be reduced or completely eliminated. A bypass, internal or external to the equipment, is a method of ensuring the open-flow air path.

A.6.5.3.2.4.1 On installations with multiple ID fans and FD fans, during any individual fan's starting sequence, its associated flow control devices and shutoff dampers are permitted to be closed.

A.6.5.3.2.4.1(2) On installations with multiple fans and crossover ducts and with the first fan in operation, the remaining idle fan's shutoff damper(s) are permitted to be closed to prevent air backflow through the idle fan. On all installations, after the first ID fan and FD fan are started and are delivering air through the furnace, the shutoff damper(s) of the remaining idle fans are permitted to be closed.

A.6.6.3.2.1 Variations in the burning characteristics of the fuel and in the normal variations in fuel-handling equipment and fuel-burning equipment introduce unreliability to the lower operating limits of the main fuel subsystem in any given furnace design.

Boilers with a small number of burners can be subject to hazardous air-fuel ratios, particularly where a burner is being placed into service or being taken out of service and one burner is tripped.

The smaller the number of burners (e.g., only two burners), the greater the potential hazard.

Specific recommendations for the design and operation of two-burner boilers are provided in 6.6.7 and 6.7.7. These same principles can be applied to boilers with more than two burners but generally fewer than six burners that are subject to this hazard.

A.6.6.3.2.2 Such transients are generated by means such as burner shutoff valves and dampers that operate at speeds faster than the speed of response of other components in the system.

A.6.6.3.2.6 Special recognition should be given to the fire hazards imposed by leakage or rupture of piping at the burner.

A.6.6.3.5.3 Various types of fuel reburn systems are being applied across many types of multiple burner boilers for control of NO_x. A limited accumulation of operating history with reburn systems prompted the Technical Committee on Multiple Burner Boilers to provide redundant safety requirements. These redundant requirements utilize either reburn flame sensors or boiler furnace gas temperature monitoring. Reburn flame sensing or furnace gas temperature monitoring provides direct supervision of variables critical to the operating safety of reburn systems. These measured variables augment the other requirements of 6.4.2.3.10.

A.6.6.4.3 Loss of multiple burners for any reason within a short time frame can indicate or create hazardous conditions within the furnace. A master fuel trip should be considered if it is determined that the loss of a predetermined number of burners within a predetermined time frame indicates such a hazardous condition. Hazards include furnace pressure excursions, fuel pressure excursions, improper fuel and air distribution, excessive combustibles, and so forth.

A.6.6.5.1.3 The objective of the leak test is to ensure that the individual burner safety shutoff valves are not leaking gas into the furnace. The test can be performed by proving the individual burner safety shutoff valves are closed, then closing the main fuel header vent valve, opening the main safety shutoff

Copyright 2014 National Fire Protection Association (NFPA). Licensed, by agreement, for individual use and download on October 4, 2014 to LEADER and READER for designated user PATTARAPORN SRITRAKOOL. No other reproduction or transmission in any form permitted without written permission of NFPA. For inquires or to report unauthorized use, contact licensing@nfpa.org.

valve, thus pressurizing the header, then closing the main safety shutoff valve. If a charging valve is used, the test is performed by proving the main safety shutoff valve is closed and proving the individual burner safety shutoff valves are closed, then closing the main fuel header valve, then opening the charging valve to pressurize the header, then closing the charging valve. That pressure must be held within predetermined limits for a predetermined amount of time for the test to be successful.

A.6.6.5.1.3.2 See Figure A.6.6.5.1.5.4(b), which shows a typical main burner fuel supply system that includes the piping that should be checked.

A.6.6.5.1.5.4 Sequences of operation are based on the typical fuel supply system shown in Figure A.6.6.5.1.5.4(a) and Figure A.6.6.5.1.5.4(b). As permitted in 6.6.3.1, variations in these piping arrangements are allowed, provided all the functional requirements of this code are met by the arrangement.

A.6.6.5.1.5.7 Although NO_x and other emissions during start-up and extremely low load operation are low, they might not comply with increasingly stringent emission limits. Deviation from the open-register light-off procedure, continuous purge, and minimum airflow requirements defined in this code to meet those limits is not recommended. There are insufficient data and operating experience to justify changes to this code.

A.6.6.5.2.1.1(2) Such an inspection is particularly important for a cold start where the fuel burned prior to shutdown contained volatile vapors heavier than air.

A.6.6.5.2.1.1(15) The frequency of testing depends on the design and operating history of each individual boiler and ignition system. As a minimum, the test should be made at each start-up following an igniter overhaul or other significant maintenance that could have affected the igniter.

A.6.6.5.2.1.1(17) The importance of reliable igniters and ignition systems cannot be overstressed.

A.6.6.5.2.1.3(B)(15) Automatic control of burner fuel and burner airflow during the lighting and start-up sequence is recommended.

A.6.6.5.2.2.1 For burners having a high airside pressure drop [generally greater than 102 mm (4 in.) water column at full boiler load], one way to indicate proper air-fuel ratio is to compare burner airflow with burner fuel flow as determined by windbox-to-furnace differential and burner header pressure. The ratio thus determined plus the open register procedure provide a guide for proper operation of burners under start-up conditions where flows might be out of the range of other meters. Windbox-to-furnace differential taps, where provided, should be located at the burner level.

A.6.6.5.2.8.2 This signal should be based on steam flow, main fuel flow, turbine load, burners in service, any combination thereof, or other means to ensure that temperatures in the reburn zone are greater than the autoignition temperature of the reburn fuel.

A.6.6.5.3.2 A trip of the fuel during a fuel-rich condition while flame is being maintained results in a sudden increase in the air-fuel ratio, which can create a greater hazard.

A.6.6.6 Annex B describes procedures for this mode of operation.

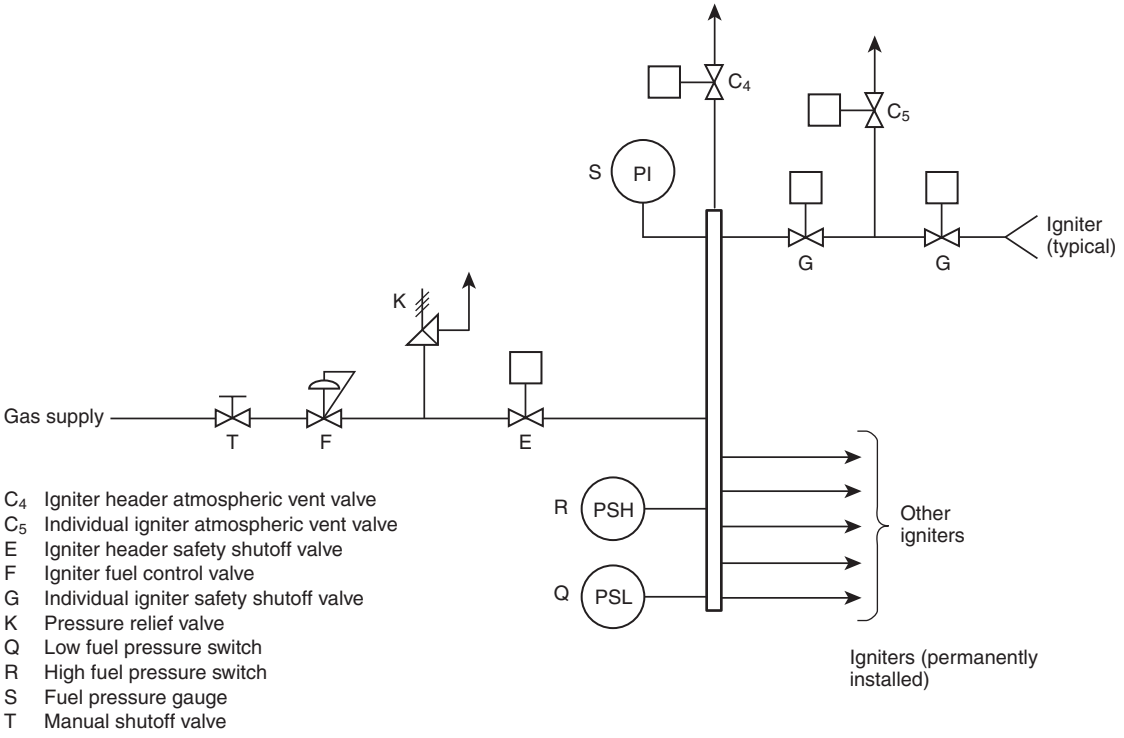

FIGURE A.6.6.5.1.5.4(a) Typical Gas Igniter System.

Copyright 2014 National Fire Protection Association (NFPA). Licensed, by agreement, for individual use and download on October 4, 2014 to LEADER and READER for designated user PATTARAPORN SRITRAKOOL. No other reproduction or transmission in any form permitted without written permission of NFPA. For inquires or to report unauthorized use, contact licensing@nfpa.org.

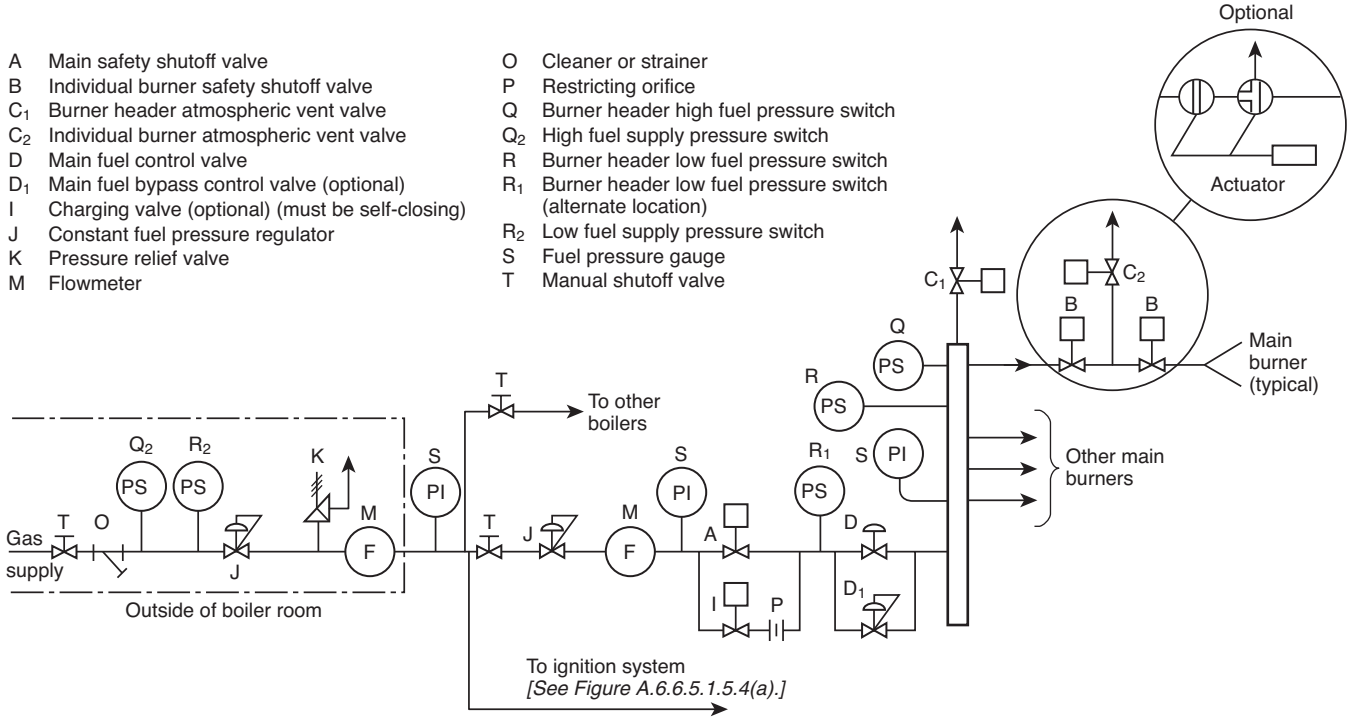

FIGURE A.6.6.5.1.5.4(b) Typical Main Burner Fuel Supply System for Fuel Gas-Fired Multiple Burner Boiler.

A.6.6.7.1.1 These boilers are subject to hazardous air-fuel ratio upsets at either burner during light-off and fuel transfer and when one of the two burners automatically trips during operation.

A.6.6.7.2.1.1(2) The result of this operation is that the remaining operating burner maintains its air-fuel ratio within the manufacturer's suggested limits after the fuel is shut off to the failed burner.

A.6.7.2(8) NFPA 77, *Recommended Practice on Static Electricity*, and API RP 2003, *Recommended Practice for Protection Against Ignitions Arising Out of Static, Lightning, and Stray Currents*, provide design parameters.

A.6.7.2(10) Initial firing of fuel oil in a cold boiler can create a special hazard by causing fires in air heaters.

A.6.7.3.1.1.3 Free fall can generate static electricity and increase vaporization of fuel.

A.6.7.3.1.2.1 This is especially important for crude oil.

A.6.7.3.1.2.2 This piping might need to be heat traced.

A.6.7.3.1.9 All instrument and control piping and other small lines containing fuel oil should be rugged, capable of withstanding the expected range of external temperatures, suitably protected against damage, and maintained at the temperature specified in established operating procedures.

The use of interface fluids or sealing diaphragms might be necessary with this instrumentation.

A.6.7.3.1.13 One method for meeting this requirement is to provide an automatic shutoff valve in the oil return line to prevent the backflow of oil into the oil header.

A.6.7.3.2.1 Variations in the burning characteristics of the fuel and in the normal variations in fuel-handling equipment and fuel-burning equipment introduce unreliability to the lower operating limits of the main fuel subsystem in any given furnace design.

A.6.7.3.2.2.1 Such transients are generated by means such as burner shutoff valves and dampers that operate at speeds faster than the speed of response of other components in the system.

A.6.7.3.2.6 Special recognition should be given to the fire hazards imposed by leakage or rupture of piping at the burner. Particular attention should be given to the integrity of flexible hoses and swivel joints.

A.6.7.3.5.3 Various types of reburn systems are being applied across many types of multiple burner boilers for control of NO_x. A limited accumulation of operating history with reburn systems prompted the Technical Committee on Multiple Burner Boilers to provide redundant safety requirements. These redundant requirements utilize either reburn flame sensors or boiler furnace gas temperature monitoring. Reburn flame sensing or furnace gas temperature monitoring provides direct supervision of variables critical to operating safety of reburn systems. These measured variables augment the requirements of 6.4.2.3.10.

A.6.7.4.3 Loss of multiple burners for any reason within a short time frame might indicate or create hazardous conditions within the furnace. A master fuel trip should be considered if it is determined that the loss of a predetermined number of burners within a predetermined time frame indicates such a hazardous condition. Hazards can include furnace pressure excursions, fuel pressure excursions, improper fuel and air distribution, and excessive combustibles.

Copyright 2014 National Fire Protection Association (NFPA). Licensed, by agreement, for individual use and download on October 4, 2014 to LEADER and READER for designated user PATTARAPORN SRITRAKOOL. No other reproduction or transmission in any form permitted without written permission of NFPA. For inquires or to report unauthorized use, contact licensing@nfpa.org.

A.6.7.5.1.3 The objective of the leak test is to ensure that the individual burner safety shutoff valves are not leaking fuel oil into the furnace. One method to perform this test is by closing the oil recirculating valve, if provided, and the individual burner safety shutoff valves, then closing the main safety shutoff valve, thus pressurizing the header. If a circulating valve is used, the test is performed by closing the main safety shutoff valve and using the circulating valve to pressurize the header, then closing the circulating valve. The pressure must be held within predetermined limits for a predetermined amount of time for the test to be successful.

A.6.7.5.1.5.4 Sequences of operation are based on the typical fuel supply system shown in Figure A.6.7.5.1.5.4(a) through Figure A.6.7.5.1.5.4(d) As permitted in 6.7.3.1, variations in these piping arrangements are allowed, provided all the functional requirements of this code are met by the arrangement. Figure A.6.7.5.1.5.4(a) through Figure A.6.7.5.1.5.4(d) show the typical piping arrangements on which the text in 6.7.5 is based.

A.6.7.5.2.1.1(2) Such an inspection is particularly important for a cold start where the fuel burned prior to shutdown contained volatile vapors heavier than air.

A.6.7.5.2.1.1(16) The frequency of testing depends on the design and operating history of each individual boiler and ignition system. As a minimum, the test should be made at each start-up following an igniter overhaul or other significant maintenance that could have affected the igniter.

A.6.7.5.2.1.1(18) The importance of reliable igniters and ignition systems cannot be overstressed.

A.6.7.5.2.1.3 Automatic control of burner fuel and burner airflow during lighting and the start-up sequence is recommended.

A.6.7.5.2.8.2 This signal should be based on steam flow, main fuel flow, turbine load, burners in service, any combination thereof, or other means to ensure that temperatures in the reburn zone are greater than the autoignition temperature of the reburn fuel.

A.6.7.5.3.2 A trip of the fuel during a fuel-rich condition while flame is being maintained results in a sudden increase in the air-fuel ratio, which can create a greater hazard.

A.6.7.6 Annex B describes procedures for this mode of operation.

A.6.7.7.1.1 These boilers are subject to hazardous air-fuel ratio upsets at either burner during light-off and fuel transfer and when one of the two burners automatically trips during operation.

A.6.7.7.2.1.1(2) The result of this operation is that the remaining operating burner maintains its air-fuel ratio within manufacturer's suggested limits after the fuel is shut off to the failed burner.

A.6.8.2.1 It takes as little as 1.36 kg (3 lb) of pulverized coal in 28.32 m^3 (1000 ft^3) of air to form an explosive mixture. Because a large boiler burns 45.4 kg (100 lb) or more of coal per second, the safe burning of pulverized coal necessitates strict adherence to planned operating sequences. *(See 6.8.5 for sequences of operation.)*

The raw coal delivered to the plant can contain foreign substances such as scrap iron, wood shoring, rags, excelsior, and rock. Much of this foreign material can interrupt coal feed, damage or jam equipment, or become a source of ignition within a pulverizer. The presence of foreign material could constitute a hazard by interrupting coal flow. This interruption could cause total or partial flameout and possible reignition accompanied by a dangerous furnace puff or explosion. Wet coal can cause a coal hang-up in the raw coal supply system. Wide variations in the size of raw coal can result in coal feeding that is erratic or uncontrollable.

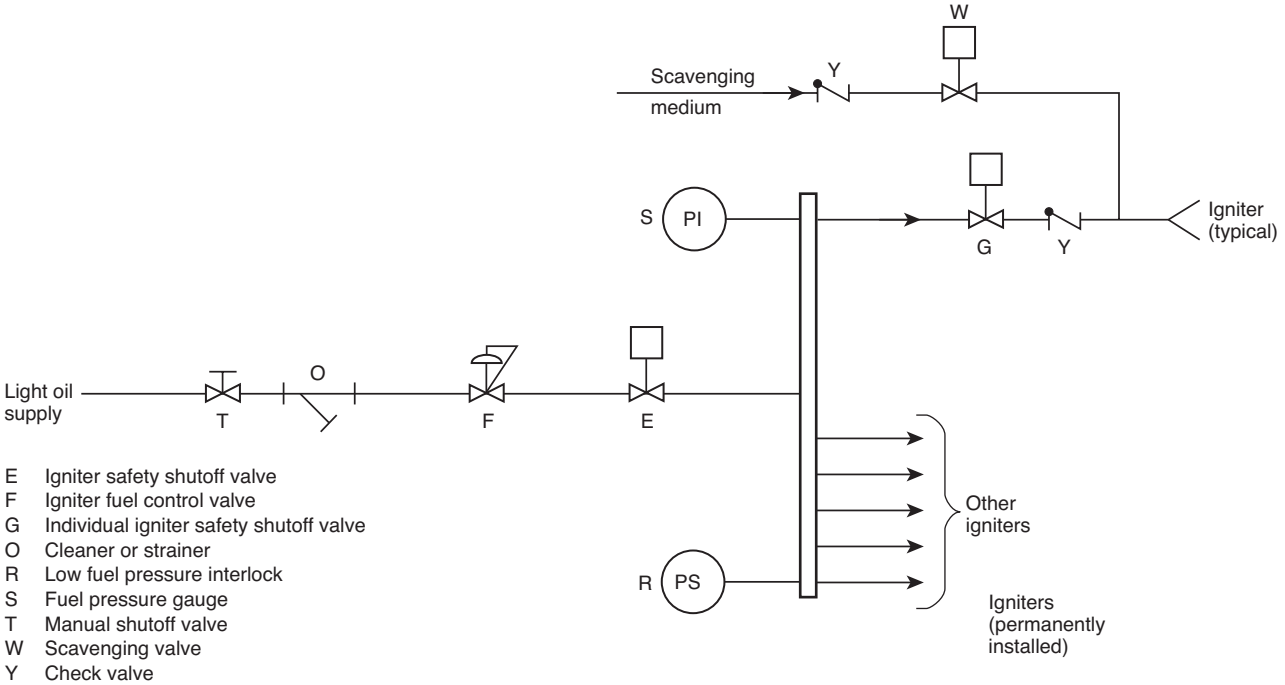

FIGURE A.6.7.5.1.5.4(a) Typical Mechanical Atomizing Light Oil Igniter System.

Copyright 2014 National Fire Protection Association (NFPA). Licensed, by agreement, for individual use and download on October 4, 2014 to LEADER and READER for designated user PATTARAPORN SRITRAKOOL. No other reproduction or transmission in any form permitted without written permission of NFPA. For inquires or to report unauthorized use, contact licensing@nfpa.org.

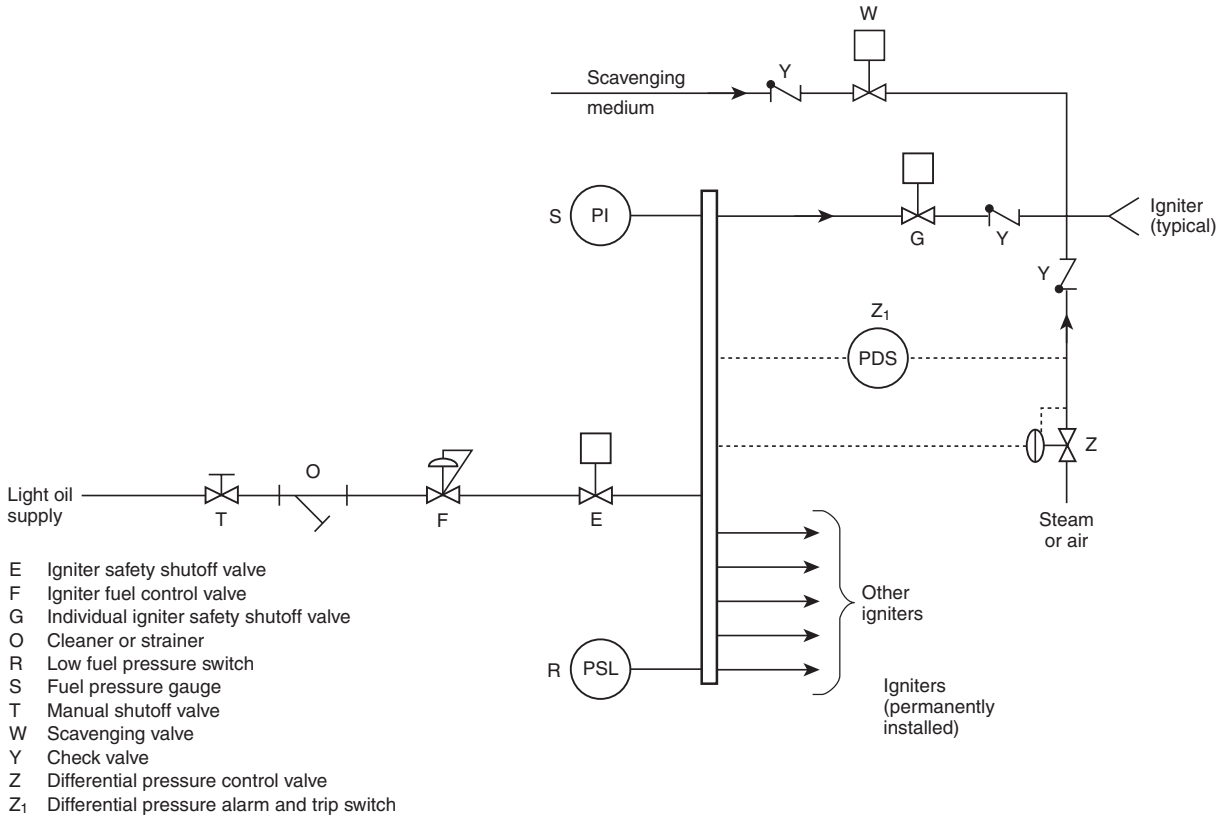

E Igniter safety shutoff valve
F Igniter fuel control valve
G Individual igniter safety shutoff valve
O Cleaner or strainer
R Low fuel pressure switch
S Fuel pressure gauge
T Manual shutoff valve
W Scavenging valve
Y Check valve
Z Differential pressure control valve
Z_1 Differential pressure alarm and trip switch

FIGURE A.6.7.5.1.5.4(b) Typical Steam or Air Atomizing Light Oil Igniter System.

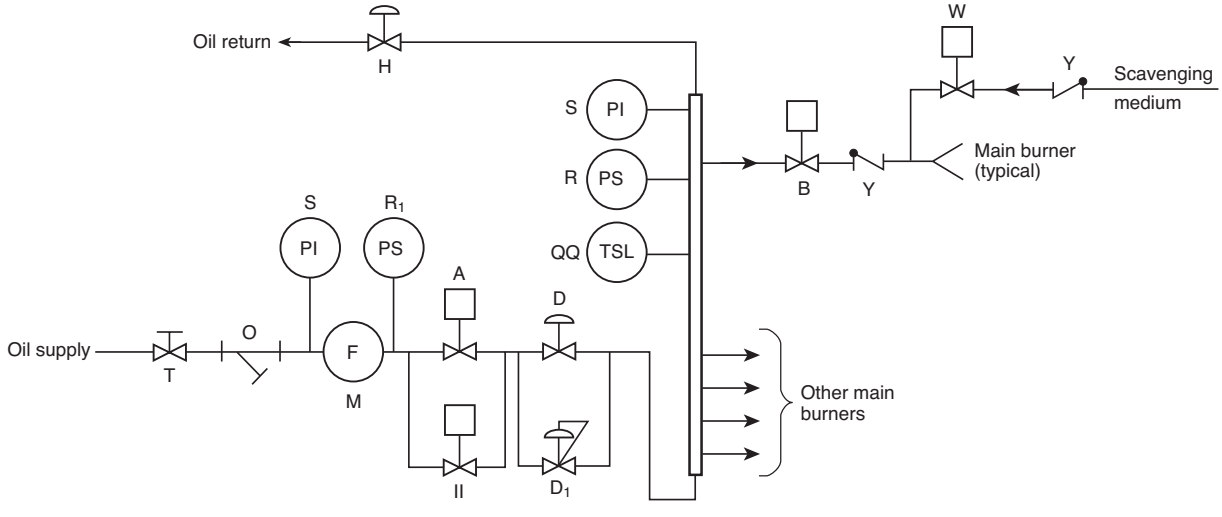

A Main safety shutoff valve
B Individual burner safety shutoff valve
D Main fuel control valve
D_1 Main fuel bypass control valve (optional)
H Recirculating valve
II Circulating valve
M Flowmeter
O Cleaner or strainer
QQ Low-temperature or high-viscosity alarm switch
R Burner header low fuel pressure switch
R_1 Low fuel pressure switch
S Fuel pressure gauge
T Manual shutoff valve
W Scavenging valve
Y Check valve

FIGURE A.6.7.5.1.5.4(c) Typical Mechanical Atomizing Main Oil Burner System.

Copyright 2014 National Fire Protection Association (NFPA). Licensed, by agreement, for individual use and download on October 4, 2014 to LEADER and READER for designated user PATTARAPORN SRITRAKOOL. No other reproduction or transmission in any form permitted without written permission of NFPA. For inquires or to report unauthorized use, contact licensing@nfpa.org.

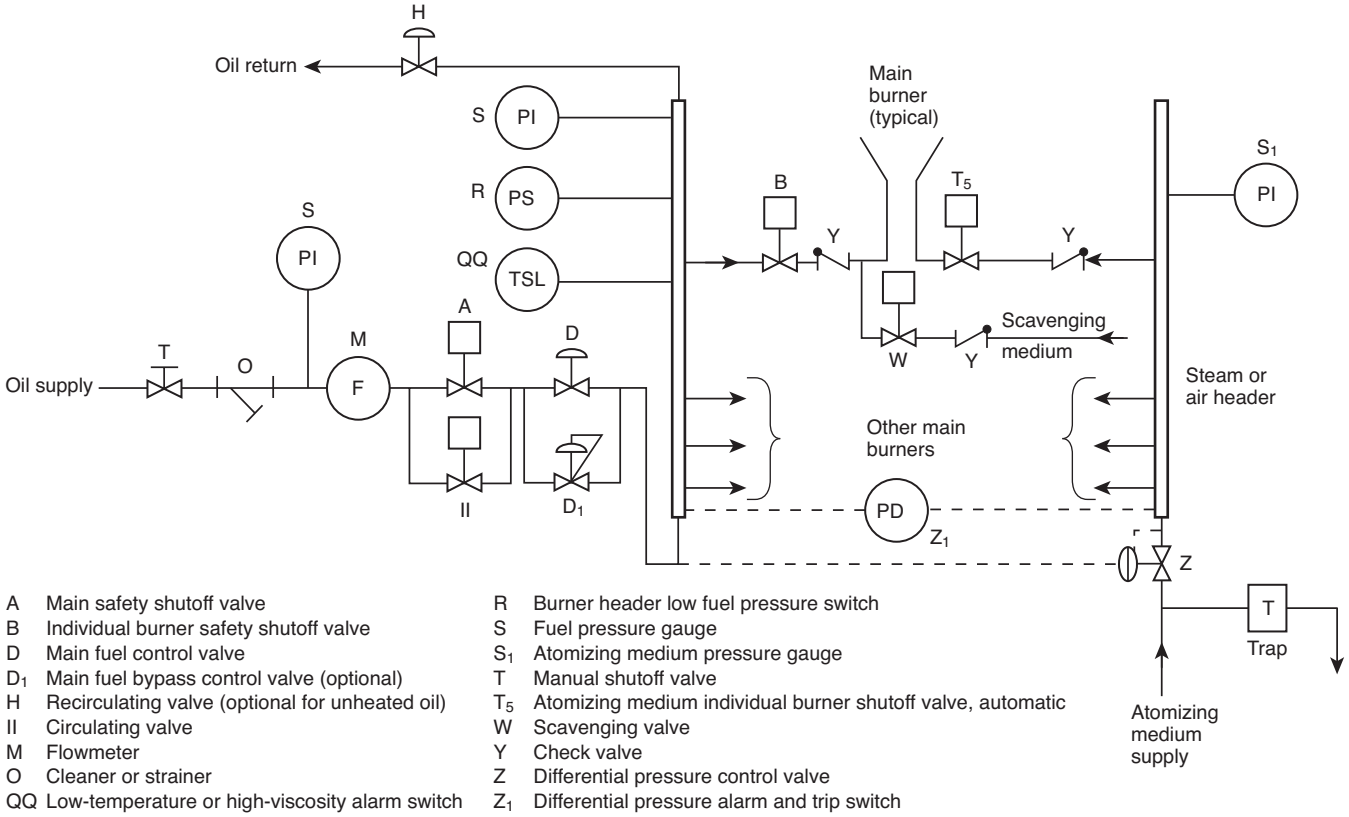

A	Main safety shutoff valve	R	Burner header low fuel pressure switch
B	Individual burner safety shutoff valve	S	Fuel pressure gauge
D	Main fuel control valve	S_1	Atomizing medium pressure gauge
D_1	Main fuel bypass control valve (optional)	T	Manual shutoff valve
H	Recirculating valve (optional for unheated oil)	T_5	Atomizing medium individual burner shutoff valve, automatic
II	Circulating valve	W	Scavenging valve
M	Flowmeter	Y	Check valve
O	Cleaner or strainer	Z	Differential pressure control valve
QQ	Low-temperature or high-viscosity alarm switch	Z_1	Differential pressure alarm and trip switch

FIGURE A.6.7.5.1.5.4(d) Typical Steam or Air Atomizing Main Oil Burner System.

A.6.8.2.1(1) Coal undergoes considerable processing in several independent subsystems that need to operate together. Failure to process the fuel properly in each subsystem increases the potential explosion hazard.

A.6.8.2.1(2) Methane gas released from freshly crushed or pulverized coal can accumulate in enclosed spaces.

A.6.8.2.1(3) Pulverized coal is conveyed through pipes from the pulverizer to the burner by transport air. Improper operation can introduce multiple hazards. For example, improper removal of a burner from service can introduce the following:

(1) The settling out of pulverized coal in the burner pipes to inoperative burners, which, on restarting of the burner, can cause a furnace puff
(2) Leakage of pulverized coal from the operating pulverizer through the burner valve into the idle burner pipe
(3) Leakage of gas or air through a burner valve, thereby causing a fire in an idle pulverizer

See 6.8.5 for precautions to minimize such hazards.

A.6.8.2.1(4) Pulverizer system explosions have resulted from the accumulation of pulverized coal in the hot air, tempering air, and coal pipe seal air supply system that are shared by a group of pulverizers. Provisions are to be made in the design of the system to prevent these occurrences and to allow periodic inspections.

A.6.8.2.1(5) The burning of pulverized coal requires close integration of the pulverizer system. Normally, the pulverizer system and the burner system function as a unit so that start-up of the pulverizer is integrated with the light-off of all its associated burners. Ignition of pulverized coal in the burner pipe could occur if the velocity of the transport air falls below a minimum value. In addition, operating and purging the pipes with this minimum airflow during the shutdown procedure prevent the settling of the fuel in the burner pipes. The danger associated with this settling is that the accumulated coal could cause an explosion as the flow in the pipe is increased.

A.6.8.2.1(6) It is necessary to dry coal for proper pulverizer operation and combustion. This drying usually is accomplished by supplying hot air to the pulverizer. Temperature control normally is maintained by mixing tempering air with hot air from the air heater. An outlet temperature that is too low impedes pulverization. An outlet temperature that is too high causes coking or overheating of burner parts and increases the possibility of pulverizer fires. Maintaining a controlled outlet temperature also aids in controlling the relationship between the fuel and the primary air.

A.6.8.2.2.2 Coal is subject to wide variations in analysis and characteristics. The change in the percentage of volatile constituents affects the ignition characteristics of the coal and can affect the permitted turndown ratio of a particular burner design. Coals having high volatile content (above 28 percent, as fired) are easier to ignite than coals having low volatile content (below 20 percent, as fired). As the volatile content decreases, the minimum permitted firing rate can increase significantly. The fineness of pulverized coal also can affect the permitted turndown ratio. Therefore, it is necessary to establish minimum firing rates for the range of volatility and fineness expected. A firing rate that is too low could result in a

Copyright 2014 National Fire Protection Association (NFPA). Licensed, by agreement, for individual use and download on October 4, 2014 to LEADER and READER for designated user PATTARAPORN SRITRAKOOL. No other reproduction or transmission in any form permitted without written permission of NFPA. For inquires or to report unauthorized use, contact licensing@nfpa.org.

gradual buildup of coke or slag on the burner tip or on the furnace floor and must be avoided.

A.6.8.2.2.3 When the boiler is operating with pulverized coal for an extended time at reduced loads, incomplete combustion can cause large quantities of unburned combustible dust to settle in hoppers and on horizontal surfaces. If this dust is disturbed by a rapid increase in airflow or by sootblowing, an explosive mixture can result. This condition has been the cause of several explosions.

A.6.8.2.3.1 The restrictions described in 6.8.2.2 might limit the turndown ratio significantly. This might make it necessary to light off the burner at higher loads than is necessary for either oil or gas. As a result, the procedures of the open register-purge rate light-off system advocated in this code are somewhat different from those for oil or gas.

A.6.8.2.3.2 Wide variations in coal quality and spare pulverizer capability lead to large burner throats; therefore, the turbulence necessary for good mixing of coal and air is significantly restricted as the load is reduced. These factors can restrict the turndown ratio when all pulverizers are in service.

A.6.8.2.3.3 With gas and fuel oil, it usually is possible to purge and light off with the idle registers in the normal firing position by momentarily closing the registers on burners to be lit in order to establish initial ignition. Although, in the case of some coal-fired boilers, this identical procedure is possible, there are other installations where the windbox-to-furnace differential necessary to obtain the desired turbulence for purge and light-off is best obtained with all registers open to an intermediate (light-off) position; the registers then are opened progressively to the normal firing position immediately after each group of burners has been lit.

A.6.8.3.2.1 Variations in the burning characteristics of the fuel and normal variations in fuel-handling equipment and fuel-burning equipment introduce unreliability to the lower operating limits of the main fuel subsystem in any given furnace design.

A.6.8.3.2.2.1 Such transients are generated by means such as burner shutoff valves and dampers that operate at speeds faster than the speed of response of other components in the system.

A.6.8.3.2.6 Special attention should be given to the fire hazards imposed by leakage or rupture of piping near the burner.

A.6.8.3.5.3 There are various types of reburn systems being applied across many types of multiple burner boilers for control of NO_x. A limited accumulation of operating history with reburn systems prompted the Technical Committee on Multiple Burner Boilers to provide redundant safety requirements. These redundant requirements utilize either reburn flame sensors or boiler furnace gas temperature monitoring. Reburn flame sensing or furnace gas temperature monitoring provides direct supervision of variables critical to the operating safety of reburn systems. These measured variables augment the requirements of 6.4.2.3.10.

A.6.8.4.1 It is not always possible with coal firing to maintain consistently detectable flame at each flame envelope (or burner), even where combustion is maintained. Several factors contribute to the development of a realistic tripping philosophy.

The flame stability of each individual burner normally is comparable to that at all the other burners associated with a single pulverizer. Where ignition energy and detection are proven for a number of burners, there is less concern regarding random or intermittent indications of loss of flame by individual detectors associated with that pulverizer.

It is recognized that any fuel input that does not ignite and burn on a continuous basis creates a hazard.

A.6.8.4.4.1 The three principal furnace configurations are as follows:

(1) Wall-fired configuration
(2) Angular downshot-fired configuration
(3) Tangentially fired configuration

A.6.8.4.4.4 The purpose of this interlock is to prevent operating a pulverizer-burner system with an insufficient number of burners for each pulverizer for stable pulverizer-burner operation.

A.6.8.5.1.1.6 Operation with less than the full complement of burners associated with a pulverizer is not recommended unless the pulzerizer-burner subsystem is designed specifically for such operation. Idle burners are subject to accumulations of unburned pulverized coal in burner lines, leakage of coal into furnace or windboxes, and overheated burner nozzles or diffusers. With highly volatile coals, there is a high probability that coking or serious fires will result from operation under such conditions.

A.6.8.5.1.5.4 Sequences of operation are based on the typical fuel supply system shown in Figure A.6.8.5.1.5.4(a) through Figure A.6.8.5.1.5.4(c), which show the typical fuel supply systems on which the text in 6.8.5 is based.

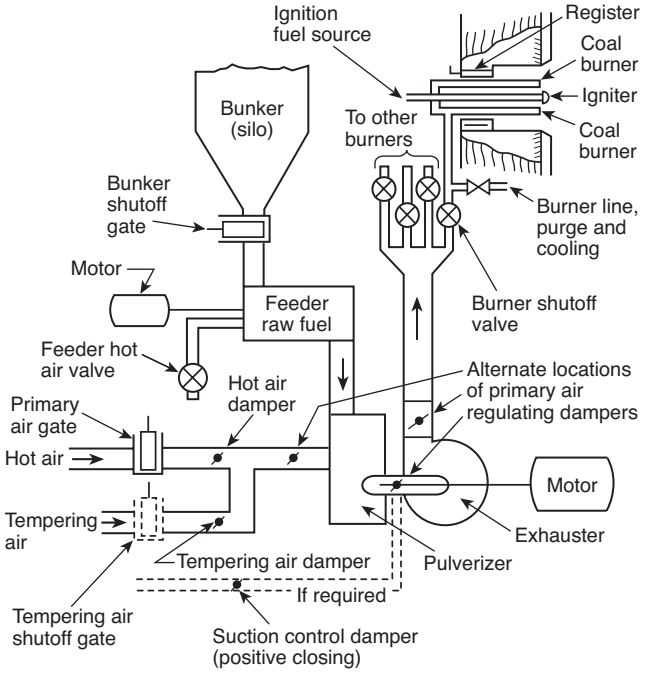

FIGURE A.6.8.5.1.5.4(a) Typical Direct-Fired Pulverizing Subsystem, Integral Transport Type.

A.6.8.5.1.5.6(C)(2) Because of the relatively high fuel input at the minimum permitted pulverizer load, it is a practice in some plants to fire intermittently; however, this practice is not recommended.

Copyright 2014 National Fire Protection Association (NFPA). Licensed, by agreement, for individual use and download on October 4, 2014 to LEADER and READER for designated user PATTARAPORN SRITRAKOOL. No other reproduction or transmission in any form permitted without written permission of NFPA. For inquires or to report unauthorized use, contact licensing@nfpa.org.

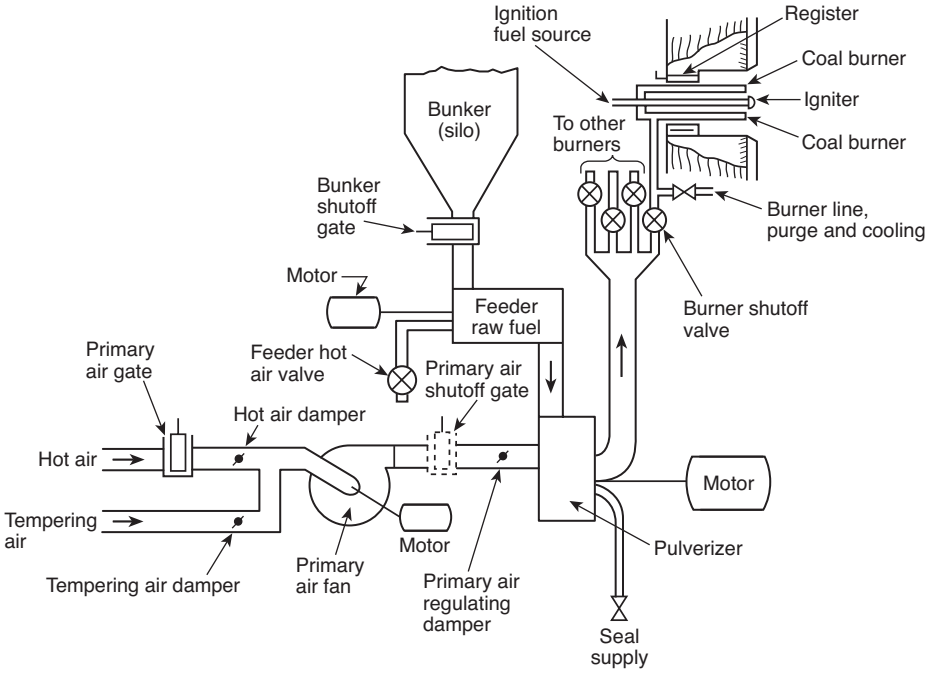

FIGURE A.6.8.5.1.5.4(b) Typical Direct-Fired Pulverizing Subsystem, Individual External Transport Type.

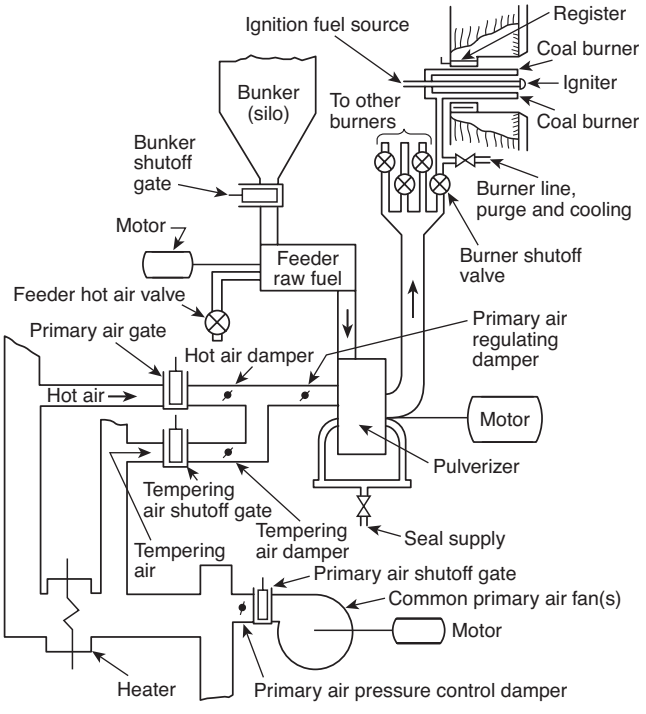

FIGURE A.6.8.5.1.5.4(c) Typical Direct-Fired Pulverizing Subsystem, Common External Transport Type.

A.6.8.5.2.1.1(2) Such an inspection is particularly important for a cold start where the fuel burned prior to shutdown contained volatile vapors heavier than air.

A.6.8.5.2.1.1(13) The frequency of testing depends on the design and operating history of each individual boiler and ignition system. As a minimum, the test should be made at each start-up following an igniter overhaul or other significant maintenance that could have affected the igniter.

A.6.8.5.2.1.1(15) The importance of reliable igniters and ignition systems cannot be overstressed.

A.6.8.5.2.1.3(B)(18) Furnace explosions commonly are caused by placing igniters into service where there has been a flameout of an operating burner.

A.6.8.5.2.1.3(B)(19) Some systems allow the igniters to remain in service on either an intermittent or a continuous basis. Furnace explosions have been attributed to re-ignition of an accumulation of fuel by igniters after an undetected flameout of the main burner.

A.6.8.5.2.8.2 This signal should be based on steam flow, main fuel flow, turbine load, burners in service, any combination thereof, or other means to ensure that temperatures in the reburn zone are greater than the autoignition temperature of the reburn fuel.

A.6.8.5.2.10.1 When tripped, a residual charge occurs, primarily in the pulverizer but also in the burner piping and nozzles. This accumulation in a hot pulverizer generates volatiles that are combustible and explosive. The charge also has the potential to create unpredictable light-off conditions.

A.6.8.5.3.2 A trip of the fuel during a fuel-rich condition while flame is being maintained results in a sudden increase in the air-fuel ratio, which can create a greater hazard.

A.6.8.5.3.3 Raw coal hang-ups ahead of the feeder that cause unstable or intermittent firing and wet coal or changing coal quality that causes flame instability are common emergencies

Copyright 2014 National Fire Protection Association (NFPA). Licensed, by agreement, for individual use and download on October 4, 2014 to LEADER and READER for designated user PATTARAPORN SRITRAKOOL. No other reproduction or transmission in any form permitted without written permission of NFPA. For inquires or to report unauthorized use, contact licensing@nfpa.org.

that can arise where pulverized coal is being fired. These emergencies can create hazardous conditions by allowing unburned fuel to accumulate in the furnace.

A.6.9 In certain cases, the environmental permit requirement to operate the SCR is limited to the months that correspond to the time of year when NO_x readily combines with other compounds in the atmosphere to form ozone. In these cases, due to the seasonal nature of SCR use, a means can be included as a part of the SCR system to allow the flue gas to bypass the SCR catalyst when operation of the SCR is not required. Because the SCR catalyst ages at its normal operating temperature even when there is no ammonia injection, this seasonal bypassing of the SCR catalyst can extend the life of that catalyst.

A.6.9.2 Since SCRs with bypass systems can be purged with flue gas into operating precipitators, a more positive means of isolation of ammonia and other combustible materials is required for long-term shutdown of the SCR. Some SCR catalysts are extremely sensitive to oil contamination. For coal-fired boilers with oil-fired igniters, it might be necessary to bypass the SCR while the igniters are firing in a cold furnace to prevent poisoning of the catalyst with oil soot.

A.6.9.3 The means can be provided by using air from the forced draft fan discharge or from a dedicated fan(s) to provide seal air to the isolation dampers or to pressurize the SCR enclosure to ensure that flue gas does not enter the SCR while it is isolated. For balanced draft units, the means could be provided by venting the SCR enclosure to atmospheric pressure.

A.6.9.4 Before an SCR is placed in service, it should have been purged with air or flue gas (at the proper conditions), with both fuel or ammonia sources blocked in an approved fashion and purge credit maintained. The SCR purged credit remains in effect, provided the SCR is isolated from the flue gas stream and the sources of both fuel and ammonia are shut off. Partial opening of the SCR isolation dampers or loss of seal air should not void the purge credit as long as furnace combustion conditions are stable and the unit operating mode meets design criteria. An SCR thus isolated and purged can be readily placed in service without any need for further purging. It is always permissible to bring an SCR system on line by conducting a normal shutdown of the boiler, repositioning the SCR isolation and bypass dampers, conducting a unit purge, and then restarting the boiler following a normal start-up procedure. However, operational tie-in of the SCR into the flue gas path without shutting down the boiler is allowed in accordance with 6.9.4, because it is recognized that a normal shutdown and restart of the combustion process to tie in the SCR, including the fresh air purge, can have a negative impact on equipment and operating costs and presents the additional risks inherent with any start-up.

A.7.3.1 By virtue of the more consistent ignition source available from the mass of high-temperature bed material during normal operation, a fluidized bed combustion system is less susceptible to furnace puffs and flameouts than burner combustion. However, during unit warm-up or operation using a slumped or semifluidized bed, the unit does not benefit from these mitigating factors.

Fluidized bed combustion systems produce carbon-containing flash *(see 3.3.30, Char)*, which can accumulate in dunes on horizontal surfaces in the gas path. Some systems use cyclone dust collectors with hoppers below that can store a substantial mass of combustible carbon particles. A carbon-rich mass can continue to combust slowly for hours after a plant shutdown and will provide an ignition source if disturbed by increased airflow. Combustibles can also accumulate in the windbox and be ignited by hot bed material that flows down through air nozzles when the bed is first fluidized.

A.7.3.2 No code can guarantee the elimination of furnace implosions. Section 7.5 provides a balance when considering the complications of reinforcement of equipment, limitations and reliability of operating procedures, control systems, and interlocks to minimize the occurrence of the conditions leading to furnace implosions.

If worst-case conditions are assumed (e.g., cold air, high head ID fan, FD fan flow shutoff, induced draft control dampers open with ID fan operating), the furnace cannot be protected by reasonable structural design.

Where the provisions outlined in Section 7.5 are used, the likelihood of furnace damage is believed to be remote, provided the ID fan has reasonable head capability. If the ID fan head capability is increased significantly, then special consideration of ID fan characteristics or special duct arrangements or special instrumentation or control should be investigated.

The rapid decrease in furnace gas temperatures and pressure resulting from either a rapid reduction in fuel input or a master fuel trip, which is a cause of implosions in non–fluidized bed boilers, is not likely to occur in a fluidized bed boiler. This is because of the resistance to fast temperature changes provided by hot bed material and refractory.

A.7.3.3.2 Although many fluidized bed combustion boiler designs provide for reinjection of elutriated char into the bed, a certain amount of unburned carbon is carried in the flue gas through the boiler's heat transfer surfaces and ductwork to the baghouse or other dust collection equipment. Combustible particles that accumulate can become an ignition source during a start-up or change in load.

A.7.3.3.8.2.2 One method by which the absence of solids can be confirmed is by soundings. Soundings are accomplished by lowering a weighted cable from the top of the cyclone to the base of the loop seal. Visual inspections are also feasible if light from an opening in the loop seal can be seen from the top of the cyclone. It should be noted that these methods may not indicate the presence of solids adhering to the sides of the cyclone, the loop seal, or the connecting pipe. *[See L.2.2(10).]*

A.7.3.3.9(1) An operating fluidized bed combustion (FBC) boiler, either bubbling or circulating, contains as the bed a large quantity of hot, granular solids. In some designs, there is also substantial hot refractory. Both the bed and the refractory store large quantities of heat, which causes the behavior of an FBC boiler to differ from that of other fuel combustion systems.

Because ignition energy is supplied by the hot bed, an FBC boiler can be operated at air-fuel ratios much higher than can be sustained in a suspension burner. Consequently, an inventory of unburned fuel can accumulate in the boiler enclosure.

An operating FBC boiler continues to produce steam after a fuel supply trip if the air supply continues to operate. The source of heat might not be the fuel remaining in the bed after the fuel supply trip but, rather, could come from the heat stored in the granular bed material and the refractory. Experience has demonstrated that, although it drops, steam production can continue at above 50 percent of the full load rating for several minutes after a fuel supply trip. However, if the

Copyright 2014 National Fire Protection Association (NFPA). Licensed, by agreement, for individual use and download on October 4, 2014 to LEADER and READER for designated user PATTARAPORN SRITRAKOOL. No other reproduction or transmission in any form permitted without written permission of NFPA. For inquires or to report unauthorized use, contact licensing@nfpa.org.

air supply is stopped and the bed defluidized, the heat removal from the bed becomes very low because the bed material is a good insulator, and steam production drops to less than 10 percent of full load production in a matter of seconds.

A.7.3.3.9(8) Bed material will sift through the air nozzles at the base of the furnace during low load operation when the pressure drop across the nozzles is low. This occurs most frequently during start-up and shutdown. Carbon particles contained in the siftings can ignite, as has happened in several plants. Additionally, accumulated material could result in structural overload, improper airflow distribution, or interference with duct burner operation. The following should be considered in the design:

(1) An air nozzle system that reduces the potential for sifting
(2) Start-up and shutdown procedures that minimize the time spent at low airflow
(3) Means to observe the contents of the windbox (e.g., quartz windows)
(4) Means for removing any accumulation

A.7.4.1.1.1 The following equations provide an example of boiler enclosure structural design, as shown in Figure A.7.4.1.1.1:

(1) *Area A:* Normal operating pressure = +1.0 kPa (4.0 in. w.g.).
   (a) +1.0 kPa (4.0 in. w.g.) × 1.67 = 1.7 kPa (6.7 in. w.g.).
   (b) The higher of +8.7 kPa (+35 in. w.g.) or +1.7 kPa (6.7 in. w.g.) is selected.
   (c) The lower of the result of item (1)(b) or the forced draft maximum head capability at ambient conditions is selected.
   (d) Area A of furnace is designed to +8.7 kPa (+35 in. w.g.) at yield.
(2) *Area B:* Normal operating pressure = +5.0 kPa (+20 in. w.g.).
   (a) +5.0 kPa (+20 in. w.g.) × 1.67 = +8.3 kPa (+33.4 in. w.g.).
   (b) The higher of +8.7 kPa (+35 in. w.g.) or +8.3 kPa (+33.4 in. w.g.) is selected.
   (c) The lower of the result of item (2)(b) or the forced draft maximum head capability at ambient conditions is selected.
   (d) Area B of furnace is designed to +8.7 kPa (+35 in. w.g.) at yield.
(3) *Area C:* Normal operating pressure = +12.4 kPa (+50 in. w.g.).
   (a) +12.4 kPa (+50 in. w.g.) × 1.67 = +20.7 kPa (+83.5 in. w.g.)
   (b) The higher of +8.7 kPa (+35 in. w.g.) or +20.7 kPa (+83.5 in. w.g) is selected.
   (c) The lower of the result of item (3)(b) or the forced draft maximum head capability at ambient conditions is selected.
   (d) Area C of furnace is designed to +20.7 kPa (+83.5 in. w.g) at yield.
(4) *Area D:* Normal operating pressure = +17.4 kPa (+70 in. w.g.).
   (a) +17.4 kPa (+70 in. w.g.) × 1.67 = +29.1 kPa (+116.9 in. w.g.).
   (b) The higher of +8.7 kPa (+35 in. w.g.) or +29.1 kPa (+116.9 in. w.g.) is selected.
   (c) The lower of the result of item (4)(b) or the forced draft maximum head capability at ambient conditions is selected.
   (d) Area D of the furnace is designed to +27.4 kPa (+110 in. w.g.) at yield.

A.7.4.1.1.2(2) The ID fan head capability increases due to significant draft losses beyond the boiler enclosure or for other reasons, such as excessive ID fan test block margins. Where the ID fan test block capability is more negative than –8.7 kPa (–35 in. w.g.), consideration should be given to an increased negative design pressure.

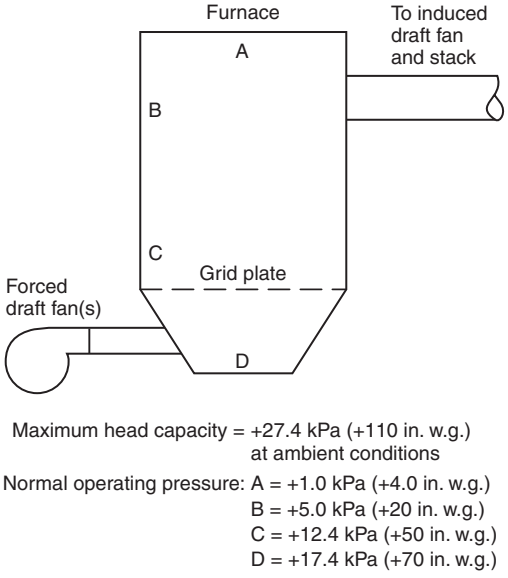

FIGURE A.7.4.1.1.1 Structural Design Diagram of Boiler Enclosure.

A.7.4.2.1.3.3 The following hazards should be considered in the design of solid fuel feed systems:

(1) The bunker should be designed to facilitate discharge of material at a controlled rate. The purchaser or the purchaser's designated representative should be aware of the wide range of material-handling characteristics of fuel that are related to differences in moisture, size distribution, and consolidation characteristics. The probable range of these characteristics for the fuels to be used and a determination of time consolidation shear values over these ranges are prerequisites for obtaining a bunker design that provides the desired flow characteristics over the range of fuels to be used.
(2) Abnormally hot, smoldering, or burning raw fuel that is ahead of the feed system is serious and should be dealt with promptly.
(3) Fuel systems can create hazardous conditions when fuel escapes into the surrounding atmosphere or when air enters an inerted system.
(4) Oxidation can raise a fuel's temperature to a point where autocombustion or spontaneous combustion can occur. This characteristic can constitute a special hazard with certain fuels and fuel mixtures.
(5) Gases can be released from freshly crushed fuel, and accumulations of flammable or explosive mixtures can occur in bins or other enclosed areas.
(6) Hot air can flow back into the fuel bunker.

A.7.4.3.2.4 Contaminants in fuel include salt, sand, sludge, water, and other abrasive or corrosive constituents. Some fuels contain waxy materials that precipitate, clogging filters and other elements of the fuel system.

Copyright 2014 National Fire Protection Association (NFPA). Licensed, by agreement, for individual use and download on October 4, 2014 to LEADER and READER for designated user PATTARAPORN SRITRAKOOL. No other reproduction or transmission in any form permitted without written permission of NFPA. For inquires or to report unauthorized use, contact licensing@nfpa.org.

A.7.4.3.4.1.4 It is recognized that any fuel input that does not ignite and burn on a continuous basis creates a hazard.

A.7.4.3.7.2.1(D) Special attention should be given to fire hazards posed by leakage or rupture of piping near the lance. Good housekeeping practices should be enforced.

A.7.4.3.8 Transients that can adversely affect burner operation are often generated by components such as burner shutoff valves or dampers that operate at speeds faster than the speed of response of other components in the system.

A.7.4.4.3 *Determination of bed temperature for operational permissives. Bed temperature* refers to the average bed temperature of an FBC boiler at which certain steps can be taken. General guidelines for the measurement of bed temperatures follow.

The requirement is for the FBC designer to furnish a temperature-measuring system and logic to provide a reliable bed temperature value during the various conditions of operation, including start-up, hot restart, low load, and normal operation.

A system that has been shown to satisfy the requirement consists of a number of thermowells, roughly proportional to the capacity of the FBC, positioned in the nominally vertical walls surrounding the bed at elevations below and above the level of the slumped bed. A penetration of a well at a location 51 mm (2 in.) from the wall provides a reliable bed temperature measurement without extensive erosion of the well. Materials are selected that are appropriate for temperature elevation, erosion, and corrosion potentials.

Where the bed is fluidized, the measurements above and below the slumped bed level fall within a narrow range. Rather than taking an average of these temperatures, a method is used in which an established minimum percentage of each of the upper and the lower bed temperature elevations exceeds the established permissive in order to meet interlock requirements.

Because of variations in FBC designs, each supplier is responsible for meeting the requirements for a reliable bed temperature measurement and logic system.

A.7.4.4.3.1.3 When a bed is not fluidized, thermocouple readings will not represent a true average bed temperature.

A.7.4.4.4.1.3 The use of gravimetric-type or calibrated volumetric-type feeders with the use of combustion airflow measurement and monitoring of the flue gas percent oxygen and low range combustibles is an acceptable method of controlling the air-fuel ratio.

A.7.4.4.4.2.9 Fluid bed combustors under certain abnormal operating conditions can accumulate significant quantities of unburnt fuel without an obvious indication of abnormality. Such conditions can occur when the fuel input exceeds the available air for combustion over an extended period of time. This condition is of particular concern where nonhomogeneous fuel of widely varying heating values is fired. The combustion control system is currently required to include features to reduce the likelihood of this occurrence.

The continuous indication of critical process variables referred to in Section 4.15 is a key aid to the operators in avoiding ongoing operation while fuel input exceeds air input.

Oxygen analyzers are necessary for fluidized bed combustion in order to keep the fuel input calibrated to true air demand for comparison to actual air input. Oxygen analyzers also advise the operator when air input rate relative to fuel input falls below the acceptable range.

Combustibles analyzers are recommended as an aid in avoiding excess fuel operation. Combustibles analyzers provide valuable data in addition to the previously described measurements and information. The deficiency of air might not always deplete flue gas oxygen before high levels of combustible products are observed. Particularly in the event of inadequate bed mixing, flue gas oxygen and flue gas combustibles can coexist and actually present a more difficult situation than a purely air-deficient circumstance.

A.7.5 Furnace structural damage could result from the occurrence of excessively high or low gas side pressure.

A condition that is likely to cause furnace pressure excursions in a fluidized bed boiler is maloperation of the equipment regulating the boiler gas flow, including the air supply and flue gas removal systems. This could result in exposure of the furnace to excessive fan head capability.

The rapid decrease in furnace gas temperatures and pressure resulting from either a rapid reduction in fuel input or a master fuel trip, which is a cause of implosions in nonfluidized bed boilers, is not likely to occur in a fluidized bed boiler because of the resistance to fast temperature changes provided by hot bed material and refractory.

On the basis of reported incidents and field tests, the maximum negative furnace pressure is determined primarily by the maximum head characteristic of the induced draft fan. A major objective of the final design should be to limit the maximum head capacity of draft equipment to that necessary for satisfactory operation. Special consideration should be given to fan selection and arrangement of ductwork to limit the effect of negative head.

With scrubbers or other high draft loss equipment for removing flue gas contaminants, a booster fan might be necessary. A bypass or other appropriate means should be provided to counteract the potentially excessive negative pressure conditions that result from combining the suction heads of both the induced draft and booster fans.

No standard can guarantee the elimination of furnace implosions. Section 7.5 provides a balance when considering the complications of reinforcement of equipment, limitations and reliability of operating procedures, control systems, and interlocks to minimize the occurrence of the conditions leading to furnace implosions.

If worst-case conditions are assumed (e.g., cold air, high head ID fan, FD fan flow shutoff, induced draft control dampers open with ID fan operating), the furnace cannot be protected by reasonable structural design.

Where the provisions outlined in Section 7.5 are used, the likelihood of furnace damage is believed to be remote, provided the ID fan has reasonable head capability. If the ID fan head capability is increased significantly, then special consideration of ID fan characteristics or special duct arrangements or special instrumentation or control should be investigated.

A.7.5.1 For the purpose of discussion in Section 7.5, the generic term *forced draft (FD) fan* is used to refer to a number of combustion air sources commonly found on fluidized bed boilers. Because of the diverse nature of the air supply systems provided on fluidized bed boilers, a careful study of the specific design is recommended to apply the provisions of this section properly to a specific unit. Some special considerations include the following:

(1) Multiple air sources at different locations (e.g., primary air fans, secondary air fans)

Copyright 2014 National Fire Protection Association (NFPA). Licensed, by agreement, for individual use and download on October 4, 2014 to LEADER and READER for designated user PATTARAPORN SRITRAKOOL. No other reproduction or transmission in any form permitted without written permission of NFPA. For inquires or to report unauthorized use, contact licensing@nfpa.org.

(2) The isolating effect of a slumped bed
(3) High pressure blowers

A.7.5.2.3(1) Excessive speed could cause undesirable hunting and overshooting of automatic controls and create damaging negative pressure transients downstream. Excessive speed also might be unsuitable for manual control.

Where variable speed fans or axial fans are used, special consideration should be given to the design of the furnace draft control system to ensure a satisfactory rate of response.

A.7.6.1.3 Provided that the average bed temperature remains above the ignition point, ignition energy remains in the bed material and refractory to ensure total burnout of combustible volatile matter after the master fuel trip. *(See also A.7.6.2.4.1.)*

A.7.6.2.1.1(10) Analyzers could contain heated elements that exceed the autoignition temperature of some fuels. Zirconium oxide analyzers, commonly used for oxygen analysis, contain an element heated to 704°C (1300°F). This high temperature element presents a potential ignition source to unburned fuel that could be present at start-up. Some analyzers are designed to protect the sampled space from the ignition source by providing flashback protection (such as flame arresters in the sample gas path). Analyzers that have that protection or that are not heated to autoignition temperature do not present an ignition hazard.

A.7.6.2.1.1(14) The use of an inert material such as sand reduces the hazard of calcium oxide to maintenance personnel if it becomes necessary to re-enter the unit shortly after start-up. *(See Annex L.)*

A.7.6.2.2.5 The intent of 7.6.2.2.5 is to require tripping of the main fuel if the bed temperature drops below a predefined value. This trip temperature is higher than the light-off permit due to differences in operation monitoring. During start-up, main fuel is being fed under carefully controlled conditions and under the direct, constant attention of an operator *[see 7.6.2.1.2.9(6) and 7.6.2.1.2.10(4)]*. This condition might not occur during normal operation.

A.7.6.2.4.1 The bed temperature measurement is valid only where the bed is fluidized.

A.7.6.2.4.2 Under certain unusual operating, start-up, or shutdown conditions, it is possible for combustibles to accumulate in the windbox and ductwork.

A.7.7.3.1 Variations in the burning characteristics of the fuel and in the normal variations in fuel-handling equipment and fuel-burning equipment introduce unreliability to the lower operating limits of the main fuel subsystem in any given furnace design.

A.7.7.5.2.1.2(A) If a charging valve (recommended to be self-closing) on the main gas supply is furnished, it should be opened to bypass the main safety shutoff valve; otherwise, the main safety shutoff valve should be opened. The main fuel control valve should be opened as needed. The burner header should be vented until it is filled with gas. The burner header atmospheric vent valve should be closed. The charging or main safety shutoff valve should be left open to establish a nominal pressure on the burner header. The charging or main safety shutoff valve then should be closed. It can be concluded that the safety shutoff valves do not leak if the nominal pressure remains within specified limits.

A.7.7.5.3(5) The maximum fuel pressure allowed at the burner might be a function of the available air flow, the maximum allowable heat input or temperature at the burner, the flame stability, the burner operating range, or other factors.

A.7.8.1.3 Some designs for steam/air atomized igniters require differential pressure control between the igniter fuel oil pressure and the atomizing media. In this instance, a differential pressure control valve and a differential pressure interlock are required in lieu of the constant pressure regulating valve and static pressure interlock.

A.7.8.3.1 Variations in the burning characteristics of the fuel and in the normal variations in fuel-handling equipment and fuel-burning equipment introduce unreliability to the lower operating limits of the main fuel subsystem in any given furnace design.

A.7.9.1.1 The mandatory automatic master fuel trips specified in 7.6.2.5.2, the main fuel trips specified in 7.6.2.6.2, and the warm-up burner trips specified in 7.7.5.3 and 7.8.5.3 represent those automatic trips for which sufficient experience has been accumulated to demonstrate a high probability of successful application for all units. The use of additional automatic trips, although not mandatory, is recommended.

It is possible for conditions conducive to a furnace explosion to exist without detection of such conditions by any of the mandatory automatic trip devices, even though they are properly adjusted and maintained. Therefore, operating personnel should be made aware of the limitations of the automatic protection system.

A.7.9.2.4.9 The mandatory master fuel trip system and circuits should be functionally independent and physically separated from all other control system operations. The intent of this separation should be to ensure that any credible failure in the control system cannot prevent or prohibit any necessary mandatory automatic trip. The intent is that the master fuel trip system function should not be intermixed with other control system functions, although they can be permitted to use the same type of hardware and software. Components such as operator interfaces or annunciation can be shared where it is desirable to do so. Information on input status should be dedicated to the mandatory master fuel trip and interlock system to the greatest extent possible. Where signals are shared between the mandatory master fuel trip and interlock systems and other control systems, the signal should be input to the master fuel trip system and retransmitted to any other control system(s).

A.7.9.3.2.2.5 The signal indicating low bed temperature and the signal indicating that the warm-up burner flame is not proven are the equivalent of a loss of all flame in a burner-fired boiler.

A.7.9.3.3.3.3 It is recommended that manual initiation be required before the purge reset of the master fuel trip device is completed.

A.7.9.3.4 Some fuel supply systems for warm-up burners are configured with sensors and interlock logic for monitoring and tripping burners on a per-burner basis. Others are configured with sensors and interlocks for monitoring and tripping warm-up burners as a group. Care must be taken to ensure that interlocks are designed for use with the fuel supply piping arrangement used.

A.7.9.3.4.2 Monitoring of header pressure to multiple warm-up burners with individual flow control capability does not satisfy this requirement. With low-pressure gas burners, furnace pressure fluctuations might be more influential on burner gas flow than burner pressure drop.

Copyright 2014 National Fire Protection Association (NFPA). Licensed, by agreement, for individual use and download on October 4, 2014 to LEADER and READER for designated user PATTARAPORN SRITRAKOOL. No other reproduction or transmission in any form permitted without written permission of NFPA. For inquires or to report unauthorized use, contact licensing@nfpa.org.

A.7.10.1 Consideration should be given to the use of an additional annunciator dedicated to high-priority critical alarms.

A.7.10.2.1 Recommended additional alarms include the following:

(1) *Combustible or carbon monoxide high.* An alarm warns the operator of a possible hazardous condition when measurable combustibles are indicated.
(2) *Air-fuel ratio (high and low).* If proper metering is installed, an alarm indicates a potentially hazardous air-fuel ratio.
(3) *Oxygen analyzer trouble.* An alarm warns the operator of a malfunctioning flue gas oxygen analyzer.

A.7.10.2.2 In addition to the recommended alarms for fuel gas burners, the following alarms are recommended to indicate abnormal conditions and, where applicable, to alarm in advance of an emergency shutdown. It is recommended that provision be made in the design for possible future conversion to automatic trips in the interlock system.

(1) *Burner register closed.* This alarm provides control room indication or alarm for the condition that all secondary air burner dampers are closed on an operating burner.
(2) *Change in heating value of the fuel gas.* In the event that the gas supply is subject to heating value fluctuations in excess of 1863 kJ/m^3 (50 Btu/ft^3), a meter in the gas supply or an oxygen meter on the flue gas should be provided.
(3) *Air-fuel ratio (high and low).* If proper metering is installed, this alarm can be used to indicate a potentially hazardous air-fuel ratio with an initial alarm indicating approach to a fuel-rich condition and a second alarm indicating approach to a hazardous fuel-rich condition.
(4) *Flame detector trouble.* This alarm warns the operator of a flame detector malfunction.
(5) *Ignition fuel supply pressure (low).* This alarm monitors the ignition fuel supply pressure at a point as far upstream of the control and safety shutoff valves as practicable.
(6) *Any vent valve failed to close.* An alarm warns the operator of vent valve failure to close.

A.7.10.2.3 In addition to the required alarms for fuel oil, the following alarms are recommended to indicate abnormal conditions and, where applicable, to alarm in advance of a safety shutdown. It is recommended that provisions be made in the design for possible future conversion to automatic trips in the interlock system.

(1) *Burner register closed.* This alarm provides control room indication or alarm for the condition that all secondary air burner dampers are closed on an operating burner.
(2) *Air-fuel ratio (high and low).* If proper metering is installed, this alarm can be used to indicate a potentially hazardous air-fuel ratio with an initial alarm indicating approach to a fuel-rich condition and a second alarm indicating approach to a hazardous fuel-rich condition.
(3) *Ignition fuel supply pressure (low).* This alarm monitors the ignition fuel supply pressure at a point as far upstream of the control and safety shutoff valves as practicable.
(4) *Flame detector trouble.* This alarm warns the operator of a flame detector malfunction.
(5) *Main oil temperature (high).* This alarm is used for heated oils only.
(6) *Main oil viscosity (high).* If the viscosity of the fuel supply is variable, it is recommended that a viscosity meter be used to provide the alarm. Interlocking to trip on high viscosity also shall be considered in such cases.
(7) *Flame detector trouble.* This alarm warns the operator of a flame detector malfunction.

A.8.2.2 No code can guarantee the elimination of HRSG explosions and implosions. Technology in this area is under constant development and is reflected in revisions to this code.

A.8.3.3.1 The following factors, at minimum, should be considered during the design evaluation:

(1) Single versus multiple steam pressure levels
(2) Allowable combustion turbine exhaust backpressure
(3) Supplementary, auxiliary, or augmented firing
(4) Combustion turbine exhaust bypass system
(5) Corrosiveness and fouling of by-products of combustion (e.g., fin tube versus bare tube, metallurgy, cold-end metal temperature)
(6) Single or multiple fuels
(7) SCR or other environmental control systems
(8) Heat transfer surface cleaning (during operation and shutdowns) and inspection
(9) Freeze protection
(10) Rapid start, operating and transients, and thermal shock
(11) Dry operation
(12) Protective systems
(13) Degree of automation and complexity of control systems
(14) Operator interface
(15) Overall system performance evaluation, feedback, and iteration (expert system database consideration)
(16) Description of start-up validation test program (reference test cases and simulator data library where available)
(17) Combustion turbine (purge exhaust)
(18) Bypass stack and damper
(19) HRSG and interconnecting ducts
(20) Forced draft fan, induced draft fan, or discharge stack, in any combination
(21) Burner management system logic
(22) Flame monitoring and tripping systems
(23) Combustion control system
(24) Power supplies configuration and codes
(25) Piping system configuration and codes
(26) Operating information
(27) Input/output selection
(28) Information displayed
(29) Data transmission (noise accuracy considerations)
(30) Logic controller software and hardware considerations
(31) Requirements for operation from a remote location
(32) Initial control tuning

A.8.3.3.2 Dynamic simulation, where utilized, should include development of the following:

(1) Configuration and data initialization
(2) Knowledge of plant behavior
(3) Preliminary control system design and tuning
(4) Validation of operating requirements (system performance)
(5) Transients and ramps for intended and unintended operation

A.8.3.4 A HRSG is a complex system, often involving numerous components, multiple steam pressure levels, emission control systems, and auxiliary, augmented air, or supplementary firing.

A.8.4.2.1 The volume of piping between the combustion turbine stop valves should be minimized.

Copyright 2014 National Fire Protection Association (NFPA). Licensed, by agreement, for individual use and download on October 4, 2014 to LEADER and READER for designated user PATTARAPORN SRITRAKOOL. No other reproduction or transmission in any form permitted without written permission of NFPA. For inquires or to report unauthorized use, contact licensing@nfpa.org.

A.8.4.2.2 In the event HRSG system conditions deviate beyond alarm set points, the operator or the control system should initiate corrective action(s) to prevent the interlock limits from being reached. These actions could include those that reduce thermal energy input to the HRSG, such as duct burner runback, duct burner trip, and combustion turbine runback.

Consideration should be given to taking pre-emergency action automatically in the event tripping parameters deviate beyond alarm levels, to minimize thermal stress duty cycles on the combustion turbine. Runback parameters should initiate from the HRSG or other plant subsystems.

A.8.4.2.2.3 A combustion turbine trip is costly in terms of its effect on combustion turbine life expectancy and should be performed only under conditions that could result in a safety hazard or equipment damage.

A.8.4.3 The operation of the HRSG combustion turbine system differs from that of a conventional multiple burner boiler. Some of the differences include the following:

(1) The combustion turbine is an internal combustion engine. The engine burns a lean mixture of fuel with compressed air. The hot, pressurized combustion gases expand from the combustor through a series of rotating turbine wheel and blade assemblies, resulting in shaft power output and hot turbine exhaust gas discharge to the HRSG. Turbine exhaust gas is hot and has a reduced oxygen content relative to air.
(2) The design of the HRSG differs from that of a regular steam generator in that, in most cases, the HRSG is designed to utilize the residual heat from the combustion turbine exhaust gas, with some supplementary firing by the duct burner, if necessary.
(3) Because the combustion turbine is a volumetric machine, combustion turbine exhaust gas is discharged within closely prescribed limits, with the oxygen content varying as a function of load.
(4) Separate purge requirements exist prior to combustion turbine light-off and prior to duct burner light-off.
(5) Air-fuel ratios controlled by duct burners are neither possible nor recommended. As vast quantities of turbine exhaust gases far in excess of the theoretical air requirements of the fuel are utilized, fuel-rich conditions cannot inherently occur under normal controlled operating conditions.
(6) Many types of burners are available for HRSG systems. The burner can consist of a number of parallel tubes or runners placed in the duct to provide the required heat release. This commonly is used for gaseous fuels and is referred to as a grid burner. Alternatively, wall-mounted burner systems with parallel flame holders in the duct can be used for liquid fuels. In-line register-type burners manufactured in Europe also have been used. Ignition systems for these burner types can employ Class 1, Class 2, or Class 3 igniters.

A.8.4.3.2.1.9 Protection for burner front exposed equipment might justify installation of fire protection as indicated in NFPA 850, *Recommended Practice for Fire Protection for Electric Generating Plants and High Voltage Direct Current Converter Stations.*

A.8.4.3.2.2.1 Usually this can be accomplished by providing full relieving capacity vented to a safe location.

A.8.4.3.2.2.2 Atmospheric vent valves located between shutoff valves are intended to relieve any gas pressure that builds up due to failure of the first (upstream) shutoff valve. This minimizes the potential for leakage into an idle HRSG. To perform properly, these valves should be large enough to relieve gas to the atmosphere at a rate equal to the potential leakage rate. In the absence of equivalent protection, vent pipe sizes and vent valve port diameters should conform to Table 4.9.2. Special precautions should be taken to vent heavier-than-air gases safely.

A.8.4.3.2.3.8 Special attention should be given to the routes of piping, valve locations, and other such components to minimize exposure to high temperature or low temperature sources. Low temperature might increase viscosity, inhibit flow, or precipitate waxy materials. High temperatures might cause carbonization or excessive pressure and leakage due to fluid expansion in trapped sections of the system.

A.8.4.3.5.1.6 Variations in burning characteristics of the fuel and the normal variations in fuel-handling and fuel-burning equipment introduce an uncertainty as to the lower operating limits of the main fuel subsystem in any given HRSG design. In these circumstances, Class 1 or Class 2 igniters, as demonstrated by test, can be used to maintain stable flame.

A.8.4.3.5.1.7 Such transients are generated by burner shutoff valves, dampers, and other components that operate at speeds faster than the response speeds of other components in the system.

A.8.4.3.6 See Figure A.8.4.3.6 for a typical system with augmented air.

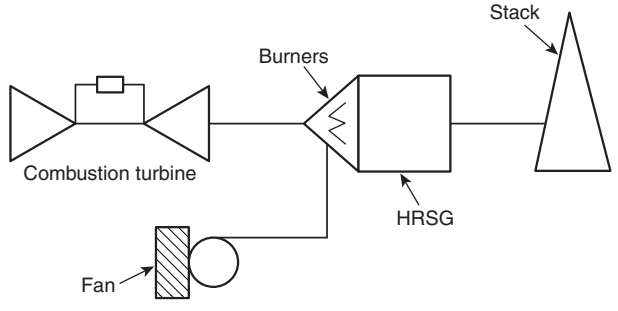

FIGURE A.8.4.3.6 HRSG Burners with Augmented Combustion Air Supply.

A.8.5 Proper design consideration should be given to internal insulation and cover plates so that the following factors are properly addressed:

(1) Insulation thickness and external casing temperature calculations
(2) Internal plate thickness and material
(3) Pin pitch, diameter, and fixing methods
(4) Welding procedures

A.8.5.1 The external skin temperature and acoustical design of the HRSG, HRSG ducts, and HRSG stack should comply with the requirements of federal, state, and local regulations.

A.8.5.2 An excessive HRSG enclosure design pressure can result in a more severe energy release from the HRSG enclosure if a blockage of the exhaust to the stack occurs.

In the event of inadvertent closure of any damper in the combustion turbine exhaust path such that exhaust flow is stopped, there will be a rapid buildup of pressure downstream

Copyright 2014 National Fire Protection Association (NFPA). Licensed, by agreement, for individual use and download on October 4, 2014 to LEADER and READER for designated user PATTARAPORN SRITRAKOOL. No other reproduction or transmission in any form permitted without written permission of NFPA. For inquires or to report unauthorized use, contact licensing@nfpa.org.

of the combustion turbine that will continue to increase even after the combustion turbine is tripped on high exhaust pressure. This is due to the rundown time of the combustion turbine. It is not possible to design the transition duct or HRSG enclosure to withstand this pressure surge. The energy with which the HRSG enclosure ruptures increases as the pressure at which rupture occurs increases.

A.8.5.3 For HRSG configurations where excessively low combustion turbine exhaust gas side pressures can develop, the system designer should consider applying the implosion protection requirements in Section 6.5.

A.8.5.4 Any through-duct penetrations should have proper provision for expansion and sealing. Where pipes, tubes, headers, or drums create a through-duct penetration, calculations should be provided to demonstrate that the differential expansion and the sealing can properly accommodate such expansion.

A.8.5.5 Due to misoperation, there have been occurrences of fin-metal tube fires in HRSGs, and there is a need to address this potential. See Section N.2 for specific articles related to iron fires, which in turn have references to previous literature. Consideration should be given to detecting and alarming fin-metal tube fires.

Iron fires in conventional and marine boilers also have occurred, principally in air preheaters. At a temperature of approximately 571°C (1060°F), carbon steel fins oxidize at an accelerated rate, and with insufficient cooling, an iron fire is inevitable.

A.8.5.7.1 Consideration should be given in the design to minimizing pockets that could trap combustible materials.

A.8.5.7.2 Drains should be provided in all ducts or enclosures where fluid accumulation is possible.

A.8.6.4 For guidance in determining area classification, see NFPA 497, *Recommended Practice for the Classification of Flammable Liquids, Gases, or Vapors and of Hazardous (Classified) Locations for Electrical Installations in Chemical Process Areas*; NFPA 499, *Recommended Practice for the Classification of Combustible Dusts and of Hazardous (Classified) Locations for Electrical Installations in Chemical Process Areas*; *NFPA 70, National Electrical Code*, Article 500; and either API RP 500, *Recommended Practice for Classification of Locations for Electrical Installations at Petroleum Facilities Classified as Class I, Division 1 and Division 2*, or API RP 505, *Recommended Practice for Classification of Locations for Electrical Installations at Petroleum Facilities Classified as Class I, Zone 0, Zone 1, and Zone 2*.

A.8.7.1 The user is encouraged to use judgment in the application of the following guidelines for all process and safety functions contained in the distributed control system.

For data transmission, the following should be considered:

(1) Every input should be sampled at intervals no longer than 1 second. Every output should be updated at intervals no longer than 1 second.
(2) For protective actions, the system should be able to convert a changed input sensor value to a completed output control action in less than 250 milliseconds.
(3) Changes in displayed data or status should be displayed within 5 seconds.
(4) Data acquisition and transmission systems should be protected from noise pickup and electrical interference.
(5) In redundant systems, the data links should be protected from common mode failures. Where practical, redundant data links should be routed on separate paths to protect against physical damage that disables both data links.

For hardware, the following should be considered:

(1) The hardware selected should have adequate processor capacity to perform all the functions required for start-up sequencing, normal operation alarming, monitoring, and shutdown of the controlled equipment. Capacity also should be available for data storage and sorting; this capacity can be permitted to be located in a separate processor.
(2) Selection should take into consideration the requirements for reliability, maintainability, and electrical classification.
(3) The hardware should provide for automatic tracking between automatic and manual functions to allow for immediate seamless transfer.
(4) The hardware should be capable of stable dynamic control.
(5) The hardware should be capable of thorough self-diagnosis.
(6) Consideration should be given to all levels and types of electrical interference that can be tolerated by the hardware without compromising its reliability or effectiveness.
(7) Fail-safe operation should be obtained through a thorough and complete analysis of each control loop and by providing for a failure of that loop (i.e., valve/actuator) to cause a fail-safe position.

For software, the following should be considered:

(1) The software package should be designed to include all logic to provide a safe and reliable control system. When the software calls for the operation of a field safety device, a feedback signal should be provided to prove that the requested operation has taken place, and an alarm should be actuated if the action is not confirmed in a specified time.
(2) The software package should be checked to ensure that no unintended codes or commands are present (e.g., viruses or test breaks). The software package should be tested and exercised before being loaded into the plant site computers or processors.
(3) The software system should be protected from inadvertent actions from operators and also should be tamperproof.
(4) Written procedures should specify the functions that can and cannot be accessed by the operator and those functions that require additional authorization for access.
(5) The software should be permitted to provide for authorized on-line changes of the timers and set points, provided the safety of the operating equipment is not compromised.
(6) The software should implement and enhance the self-diagnostic hardware that has been provided.

A.8.7.2.2.2 This requirement does not preclude the storage of data with smaller percentage changes of value when appropriate.

A.8.7.2.3 Consideration should be given to monitoring the following additional HRSG parameters:

(1) Fuel flow
(2) Fuel supply header pressure
(3) Feedwater pressure at each pressure level
(4) Feedwater flow at each pressure level
(5) Economizer inlet water temperature
(6) Economizer outlet water temperature
(7) Steam temperature at each level
(8) Steam flow at each pressure level
(9) Oxygen in flue gas at the HRSG outlet

Copyright 2014 National Fire Protection Association (NFPA). Licensed, by agreement, for individual use and download on October 4, 2014 to LEADER and READER for designated user PATTARAPORN SRITRAKOOL. No other reproduction or transmission in any form permitted without written permission of NFPA. For inquires or to report unauthorized use, contact licensing@nfpa.org.

A.8.8.1 The requirements in Chapter 1 through Chapter 4 and in Chapter 8 apply to all combustion turbine and HRSG configurations. Configurations not specified might require additional safety considerations and requirements.

Sections 8.1 through 8.8 of this code are based on a directly coupled combustion turbine and HRSG, either with or without duct burners. Combustion turbine exhaust is the only source of heat to the HRSG where no duct burners are supplied and is the principal source of combustion air for the duct burners where the HRSG system is so equipped. *[See Figure A.8.8.1(a) and Figure A.8.8.1(b).]*

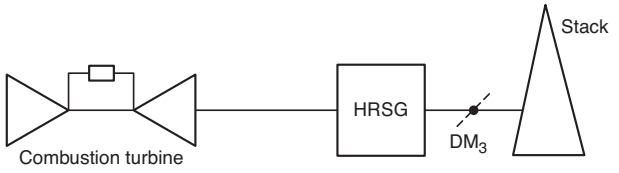

FIGURE A.8.8.1(a) Combustion Turbine with Directly Coupled Unfired HRSG.

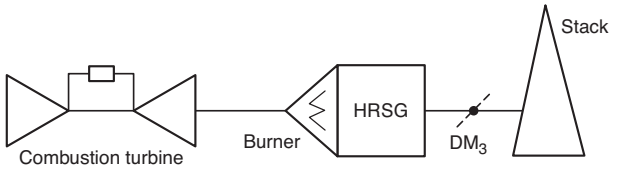

FIGURE A.8.8.1(b) Combustion Turbine and Directly Coupled HRSG with Burners.

A.8.8.2.7.2 This sequence provides a continuous airflow or flue gas flow through the HRSG at a rate that is at least the rate that existed during the purge operation. The objective of this practice is to ensure minimum velocities through the unit to prevent hazardous accumulations of unburned fuel.

A.8.8.2.7.3 Automatic start systems can be permitted to establish igniter flame on multiple burner elements simultaneously with proper supervision. Similarly, main burner elements can be permitted to be configured to operate as one with proper supervision.

A.8.8.4.1 The objective of this practice is to remove potential accumulations of hazardous unburned fuel from the volume defined in 8.8.4.2.1, which could be ignited by light-off of the combustion turbine.

A.8.8.4.2.2.2(2) An engineered model study has shown the capability of accurately depicting the gas flow characteristics within a HRSG enclosure. The greatest experience base for model studies has been physical scale models utilizing a cold airflow. These models are generally accurate if kinematic similitude is maintained by ensuring that the test flow within the model is fully turbulent (Reynolds number >3200). The increasing availability of computational fluid dynamics (CFD) programs offers an alternative to physical modeling. With any model study, the accuracy of the results is dependent on the skill of the modeler, the quality of the modeling tools, and the detail of the model.

Engineered model studies can be used to determine purge effectiveness. For this use, the physical model generally offers the advantage of ease of visualization when in the identification of areas of high combustible concentrations. It is difficult, however, to quantify purge efficiencies with a physical model. The CFD model, when properly created, is able to define the change in concentration of the combustibles, but in general it is less easily visualized. It is also recognized that it is possible to consolidate the results of many model studies to develop a calculative method of correlating HRSG configurations with specific purge rates.

Physical or computational modeling or other engineering approaches can demonstrate or define a specific purge rate (higher or lower than those specified in 8.8.4.2.2) for HRSGs. However, the parameters vary for each installation and are unique.

As a minimum, consideration should be given, but not be limited to, the following:

(1) Ductwork and stack geometry
(2) HRSG geometry
(3) Fuel characteristics (lower explosive limits, autoignition temperature, density, etc.)
(4) Combustion turbine/HRSG conditions (hot or cold)
(5) Fuel accumulation zones

In physical or computational modeling, the reproduction of areas where combustible gas can accumulate is of extreme importance. An example of this would be the steam drum and collection header cavities located on the top of HRSGs. These pockets can be very large and vary in size considerably, depending on the manufacturer and the model. Low purge rates might not be able to dissipate the flammable vapors in these locations and could require separate venting or blowers to reduce the flammable vapors.

While not currently covered by this code, interconnected multiple combustion turbines and HRSGs are being installed and operated. These configurations require special purge considerations and could require purge rates significantly higher than those required by this code. The principles provided in NFPA 69, *Standard on Explosion Prevention Systems*, should be followed to determine the required purge airflow air rate. When applying this method, a *K* factor consistent with the HRSG design should be established.

A.8.8.4.6 The initial concept of combustion turbine purge credit was presented to the Technical Committee on Heat Recovery Steam Generators in 2003. This concept was introduced due to the general industry trend to reduce the start-up time for frequently cycling plants and concerns that the introduction of cold purge air into a hot HRSG would have a negative impact on the HRSG's long-term reliability. In preparation for the 2007 edition of NFPA 85, BCS-HRS members requested that the committee consider establishing procedures and equipment for purge credit; however, the material was not available for inclusion in that edition. The Technical Committee established a task group in 2006, and subsequent to that, the full BCS-HRS committee spent the next several years developing requirements to enable users to safely implement "rapid start" capability for HRSG equipment. The requirements for establishing purge credit in the 2011 edition of NFPA 85 represent the work of the task group and the BCS-HRS technical committee.

A.8.8.4.6.1 See Figure A.8.8.4.6.1.

Copyright 2014 National Fire Protection Association (NFPA). Licensed, by agreement, for individual use and download on October 4, 2014 to LEADER and READER for designated user PATTARAPORN SRITRAKOOL. No other reproduction or transmission in any form permitted without written permission of NFPA. For inquires or to report unauthorized use, contact licensing@nfpa.org.

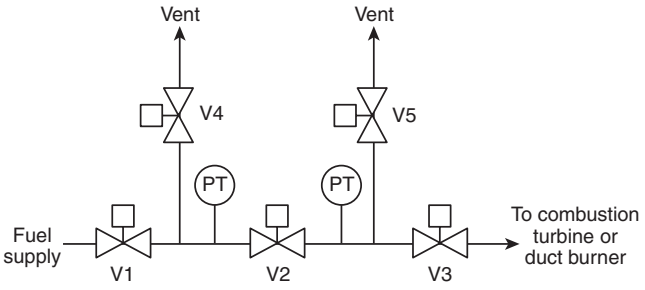

FIGURE A.8.8.4.6.1 System 1 Gaseous Fuels Triple Block and Double Vent Valve Arrangement.

A.8.8.4.6.1(1) The combustion turbine normal shutdown includes sufficient postpurge airflow to satisfy the requirements of the combustion turbine purge.

A.8.8.4.6.1(4) See Figure A.8.8.4.6.1. The following test sequences are examples of a valve-proving system for a specific combustion turbine that satisfies the requirements of 8.8.4.6.1(4). For each application, the allowable pressure rise or pressure decay and allowed times shown need to be determined as a function of valve class leakage and pipe section volume.

Test sequence during shutdown. During any shutdown condition, both gas vent valves (V4 and V5) are opened, and the three fuel block valves (V1, V2, and V3) are closed when the fuel system control logic shuts off the fuel. To test V2, close both vent valves (V4 and V5) and open V1. Monitor the pipe section between the middle and most downstream block valves (V2 and V3) for a pressure increase; a pressure increase of more than 69 kPa (10 psi) in 30 seconds is not allowed. Failure of this test indicates that a failure or leak in the middle block valve (V2) possibly has occurred, thus preventing satisfaction of a combustion turbine purge credit.

Test sequence during startup. Prior to any startup sequence, both gas vent valves (V4 and V5) are open, and the three fuel block valves (V1, V2, and V3) are closed. To test V3 during the start-up sequence, close both vent valves (V4 and V5) and open V1 and V2. Close V1 and V2 and open V4. Monitor the pipe section between the middle and most downstream block valves (V2 and V3) for a pressure decrease; a pressure decrease of more than 69 kPa (10 psi) in 30 seconds is not allowed. Failure of this test indicates that a failure or leak in the most downstream block valve (V3) possibly has occurred, thus preventing startup of the combustion turbine without a full purge. The operator is cautioned about firing the combustion turbine in this condition due to the potential hazards that could result from operation with valve leakage above design. Following completion of the test, open valve V5.

A.8.8.4.6.2 See Figure A.8.8.4.6.2. The intent of this section is to maintain an air or inert gas plug in the fuel piping to prevent fuel from entering the combustion turbine or HRSG, and not to prove valve leak tightness.

A.8.8.4.6.2(1) The combustion turbine normal shutdown includes sufficient postpurge airflow to satisfy the requirements of the combustion turbine purge.

A.8.8.4.6.3 See Figure A.8.8.4.6.3. The intent of this section is to maintain an air or inert gas plug in the fuel piping to prevent fuel from entering the combustion turbine or HRSG and not to prove valve leak tightness.

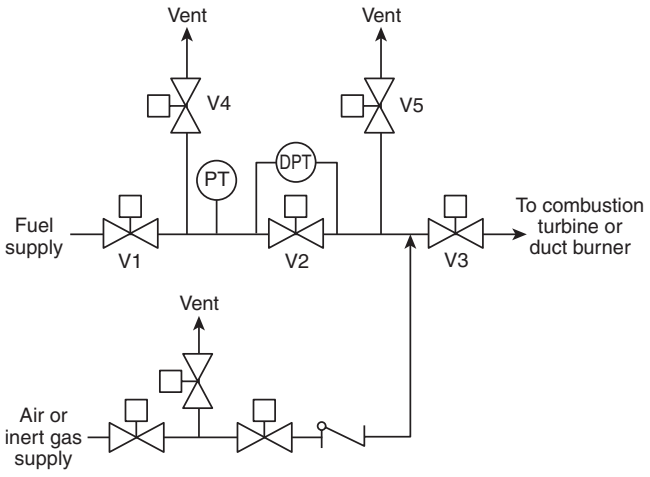

FIGURE A.8.8.4.6.2 System 2 Gaseous Fuels with Pressurized Pipe Section.

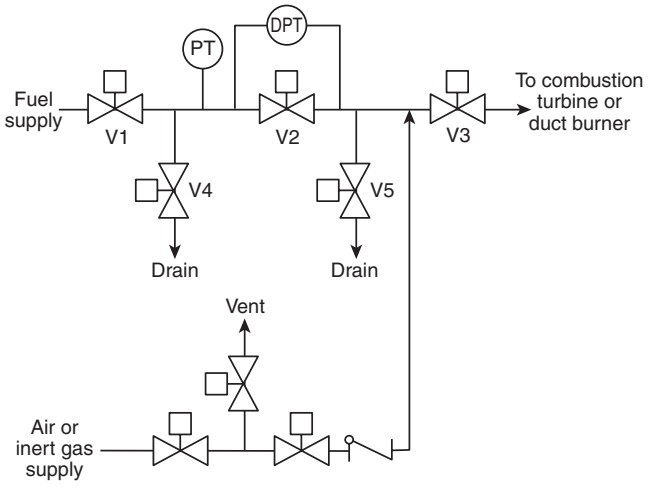

FIGURE A.8.8.4.6.3 System 3 Liquid Fuels with Pressurized Pipe Section.

A.8.8.4.6.3(1) The combustion turbine normal shutdown includes sufficient postpurge airflow to satisfy the requirements of the combustion turbine purge.

A.8.8.5.8 Figure A.8.8.5.8(a) through Figure A.8.8.5.8(j) represent typical fuel supply systems for duct burners.

A.8.9.1 Figure A.8.9.1 shows separate dampers for isolating gas flow to the HRSG and allowing gas flow to the bypass stack.

A.8.9.2.2.4 The dew point of the exhaust gases should be determined. Detrimental effects such as corrosion should be minimized when choosing materials of construction.

It might be necessary to take special precautions to protect the superheater or other circuits from excessive temperatures or pressures by ensuring a constant flow of cooling steam through venting.

Copyright 2014 National Fire Protection Association (NFPA). Licensed, by agreement, for individual use and download on October 4, 2014 to LEADER and READER for designated user PATTARAPORN SRITRAKOOL. No other reproduction or transmission in any form permitted without written permission of NFPA. For inquires or to report unauthorized use, contact licensing@nfpa.org.

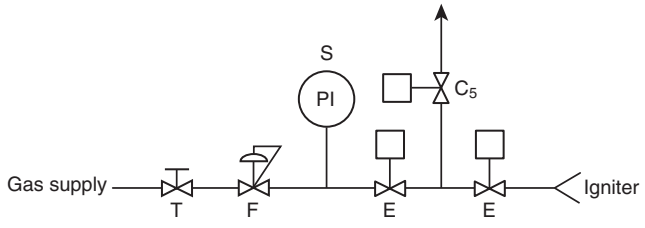

C5 Igniter shutoff atmospheric vent valve
E Igniter safety shutoff valve
F Igniter fuel control valve
S Fuel pressure gauge
T Manual shutoff valve

FIGURE A.8.8.5.8(a) Typical Duct Burner Gaseous Fuel Ignition System of a Single Element or Multiple Elements Fired Simultaneously (Class 3 Igniter Monitoring Requirements Shown).

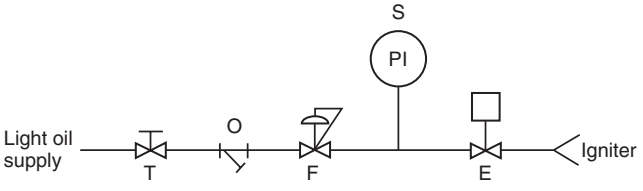

E Igniter safety shutoff valve
F Igniter fuel control valve (optional)
O Cleaner or strainer
S Fuel pressure gauge
T Manual shutoff valve

FIGURE A.8.8.5.8(b) Typical Duct Burner Liquid Fuel Ignition System of a Single Burner or Multiple Burners Fired Simultaneously (Class 3 Igniter Monitoring Requirements Shown).

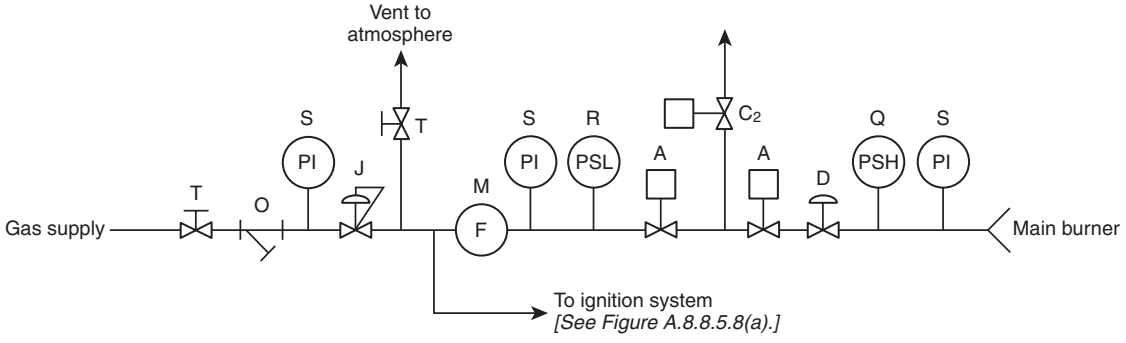

A Main burner safety shutoff valve
C2 Main burner shutoff atmospheric vent valve
D Main fuel control valve
J Fuel pressure regulator (optional)
M Flowmeter
O Cleaner or strainer
Q High fuel pressure interlock
R Low fuel pressure interlock
S Fuel pressure gauge
T Manual shutoff valve

FIGURE A.8.8.5.8(c) Typical Main Gaseous Fuel Duct Burner System of a Single Element or Multiple Elements Fired Simultaneously.

A.8.9.2.3 Proper design and selection of HRSG and component materials require knowledge of expected operating conditions. The reintroduction of combustion turbine exhaust gas at temperatures and flow levels in a short time frame (faster than the typical combustion turbine start-up sequence) can affect HRSG material life expectancy and the component materials selected. The sequence of diverter damper operation in conjunction with combustion turbine exhaust gas flow needs to be considered by the HRSG manufacturer to minimize impact on HRSG materials selected.

A.8.10 See Figure A.8.10 for typical combustion turbine and fired HRSG with fresh air firing capability.

A.8.10.1 The designer should ensure that the proper margin above theoretical air is provided under all operating conditions.

A.8.10.1.4 When minimum airflow is proven by trial by the user, the associated risks should be assessed. Problems from reduced airflow can include, but are not limited to, higher flue gas temperatures, higher metal temperatures, flue gas temperature stratification, increased flame length, and poor distribution of combustion air. Consultation with the manufacturers is recommended to prevent damage, including damage due to overheating, of the HRSG casing and heat transfer surfaces.

A.8.10.1.5 High airflow is required to ensure proper airflow distribution through the HRSG, and low fuel flow compared to the high airflow is required to prevent tube and tube fin overheating when operating in a fresh air firing mode. This precludes the development of an explosive mixture in the HRSG, and automatic air-fuel ratio control is not required even with fuel flow in automatic.

A.9.1.1 Use of fuel blends with individual fuels having less than 8 percent volatility on a moisture-free basis should be discussed fully with the manufacturer.

A.9.3.1 Pulverizing and fuel system component functions include the following:

(1) *Drying and conveying of fuel.* Pulverizer air is used to continuously convey the pulverized fuel from the pulverizer. Normally, heated pulverizer air evaporates some of the moisture from the raw fuel while it is being pulverized, and it elevates the air-fuel mixture to the desired temperature. The temperature and quantity of pulverizer air that is used are controlled to obtain the desired degree of dryness and pulverizer outlet temperature, depending on the type of fuel being burned.

Copyright 2014 National Fire Protection Association (NFPA). Licensed, by agreement, for individual use and download on October 4, 2014 to LEADER and READER for designated user PATTARAPORN SRITRAKOOL. No other reproduction or transmission in any form permitted without written permission of NFPA. For inquires or to report unauthorized use, contact licensing@nfpa.org.

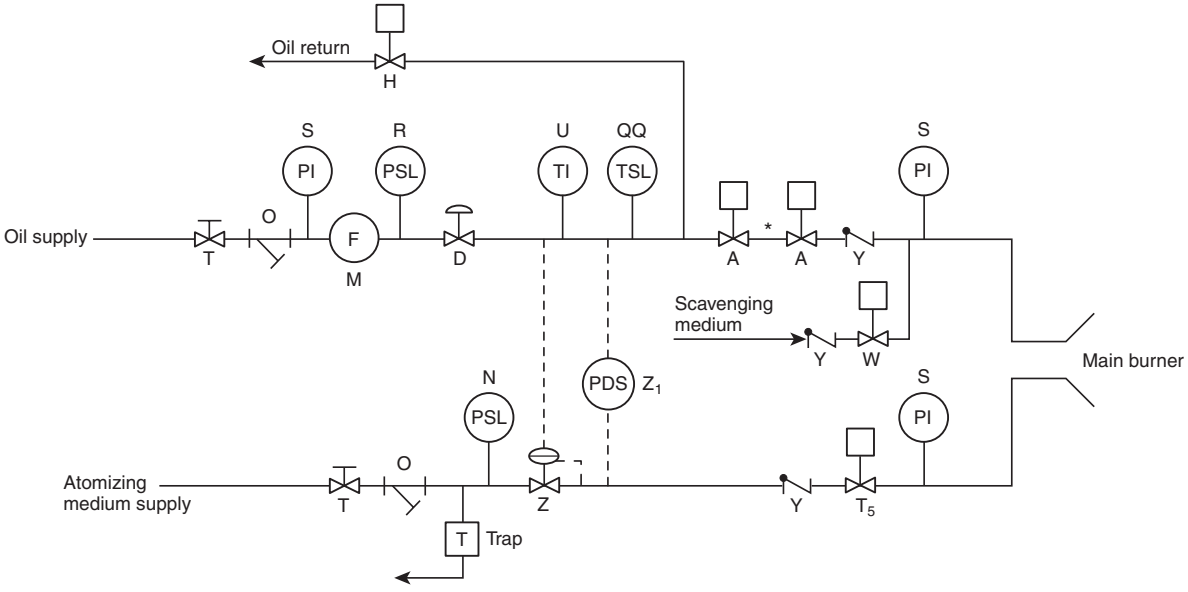

*Caution: See 8.4.4.3.3.

A Main burner safety shutoff valve
D Main fuel control valve
H Recirculating valve (optional for unheated oil)
M Flowmeter
N Low atomizing pressure interlock
O Cleaner or strainer
QQ Low-temperature or high-viscosity alarm (optional for unheated oil)
R Low fuel pressure interlock
S Fuel pressure gauge
T Manual shutoff valve
T_5 Atomizing medium individual burner shutoff valve, automatic
U Temperature gauge (optional for unheated oil)
W Scavenging valve
Y Check valve
Z Differential pressure control valve
Z_1 Differential pressure alarm and trip interlock

FIGURE A.8.8.5.8(d) Typical Steam or Air Atomizing Single Main Liquid Fuel Duct Burner System.

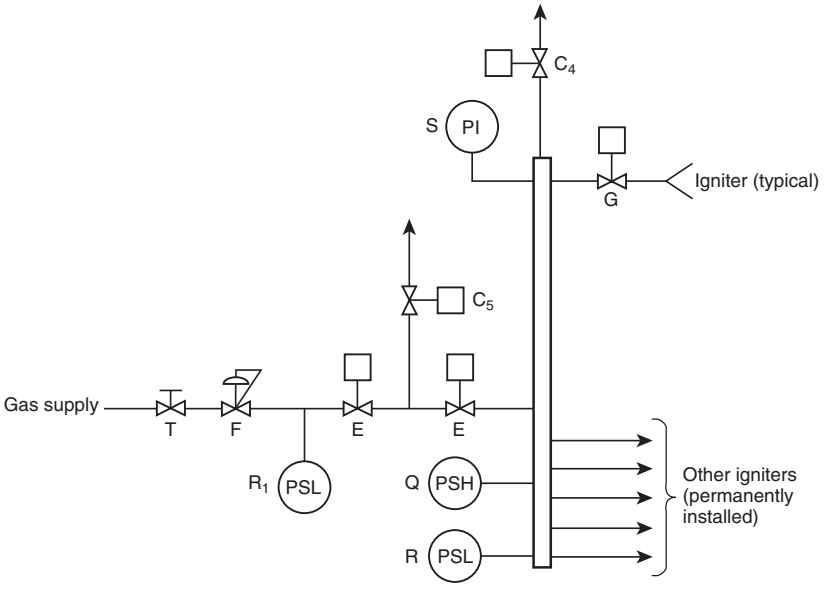

C_4 Igniter header atmospheric vent valve (optional)
C_5 Igniter supply atmospheric vent valve
E Igniter header safety shutoff valve
F Igniter fuel control valve
G Individual igniter safety shutoff valve
Q High fuel pressure interlock
R Low fuel pressure interlock
R_1 Low fuel pressure interlock (alternate location for R)
S Fuel pressure gauge
T Manual shutoff valve

FIGURE A.8.8.5.8(e) Typical Duct Burner Gaseous Fuel Igniter System.

Copyright 2014 National Fire Protection Association (NFPA). Licensed, by agreement, for individual use and download on October 4, 2014 to LEADER and READER for designated user PATTARAPORN SRITRAKOOL. No other reproduction or transmission in any form permitted without written permission of NFPA. For inquires or to report unauthorized use, contact licensing@nfpa.org.

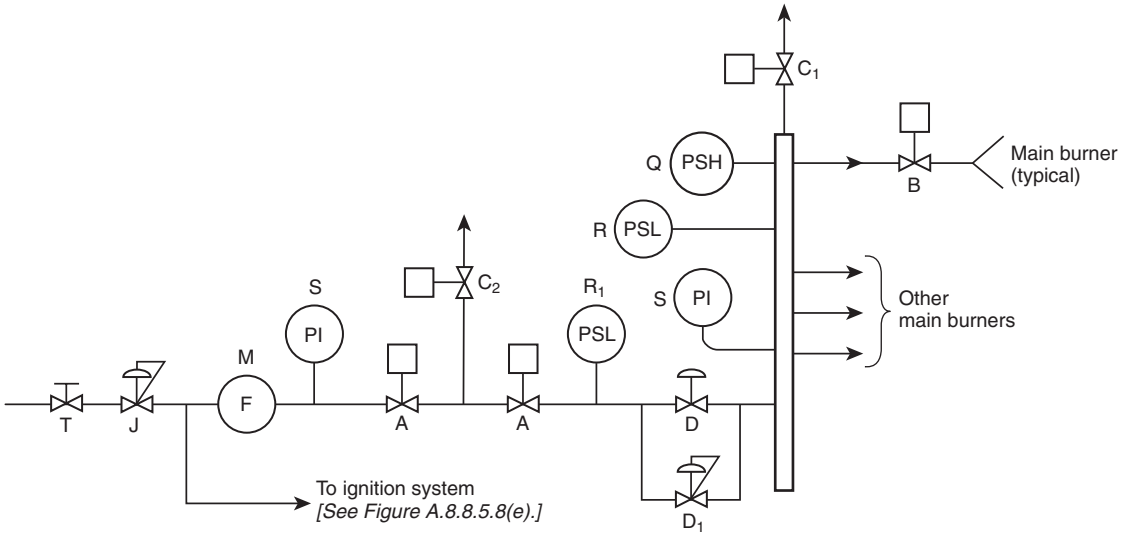

A Main safety shutoff valve
B Individual burner safety shutoff valve
C_1 Main burner header charging atmospheric vent valve (optional)
C_2 Main burner header shutoff atmospheric vent valve
D Main fuel control valve
D_1 Main fuel bypass control valve (optional)
J Fuel pressure regulator (optional)
M Flowmeter
Q Burner header high fuel pressure interlock
R Burner header low fuel pressure interlock
R_1 Burner header low fuel pressure interlock (alternate location for R)
S Fuel pressure gauge
T Manual shutoff valve

FIGURE A.8.8.5.8(f) Typical Main Gaseous Fuel Duct Burner System.

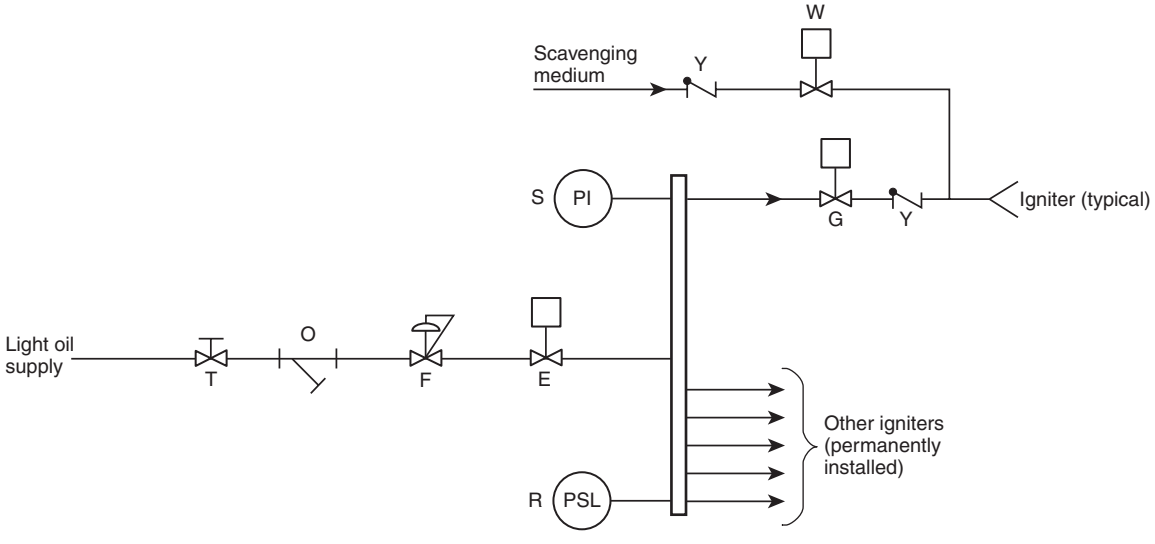

E Igniter safety shutoff valve
F Igniter fuel control valve
G Individual igniter safety shutoff valve
O Cleaner or strainer
R Low fuel pressure interlock
S Fuel pressure gauge
T Manual shutoff valve
W Scavenging valve
Y Check valve

FIGURE A.8.8.5.8(g) Typical Duct Burner Mechanical Atomizing Light Liquid Fuel Igniter System.

Copyright 2014 National Fire Protection Association (NFPA). Licensed, by agreement, for individual use and download on October 4, 2014 to LEADER and READER for designated user PATTARAPORN SRITRAKOOL. No other reproduction or transmission in any form permitted without written permission of NFPA. For inquires or to report unauthorized use, contact licensing@nfpa.org.

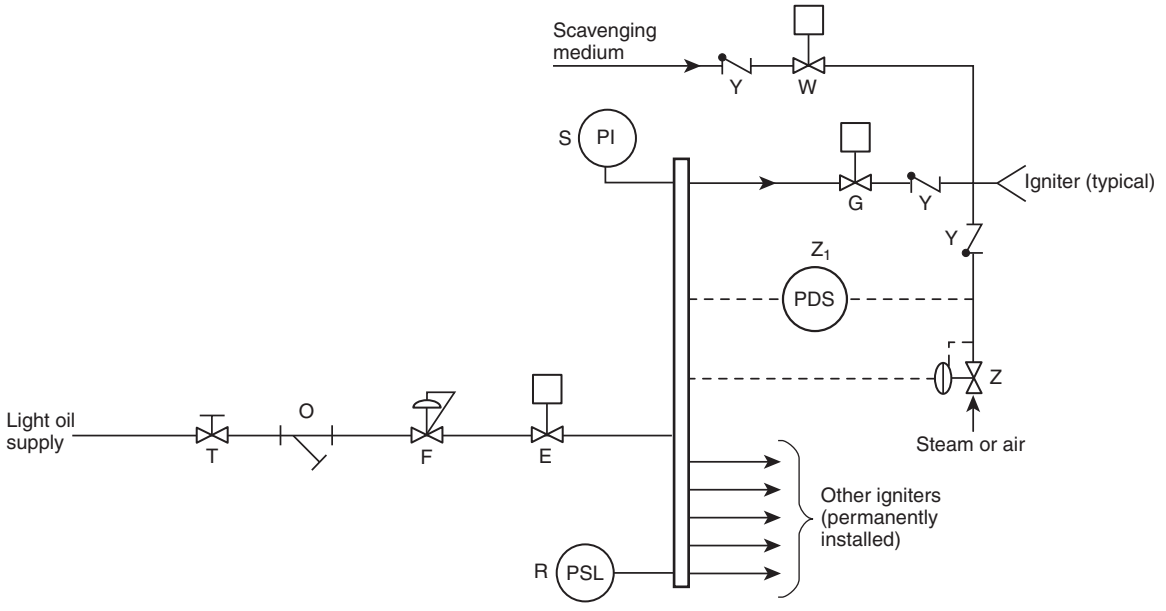

E Igniter safety shutoff valve
F Igniter fuel control valve
G Individual igniter safety shutoff valve
O Cleaner or strainer
R Low fuel pressure interlock
S Fuel pressure gauge
T Manual shutoff valve
W Scavenging valve
Y Check valve
Z Differential pressure control valve
Z_1 Differential pressure alarm and trip interlock

FIGURE A.8.8.5.8(h) Typical Duct Burner Steam or Air Atomizing Light Liquid Fuel Igniter System.

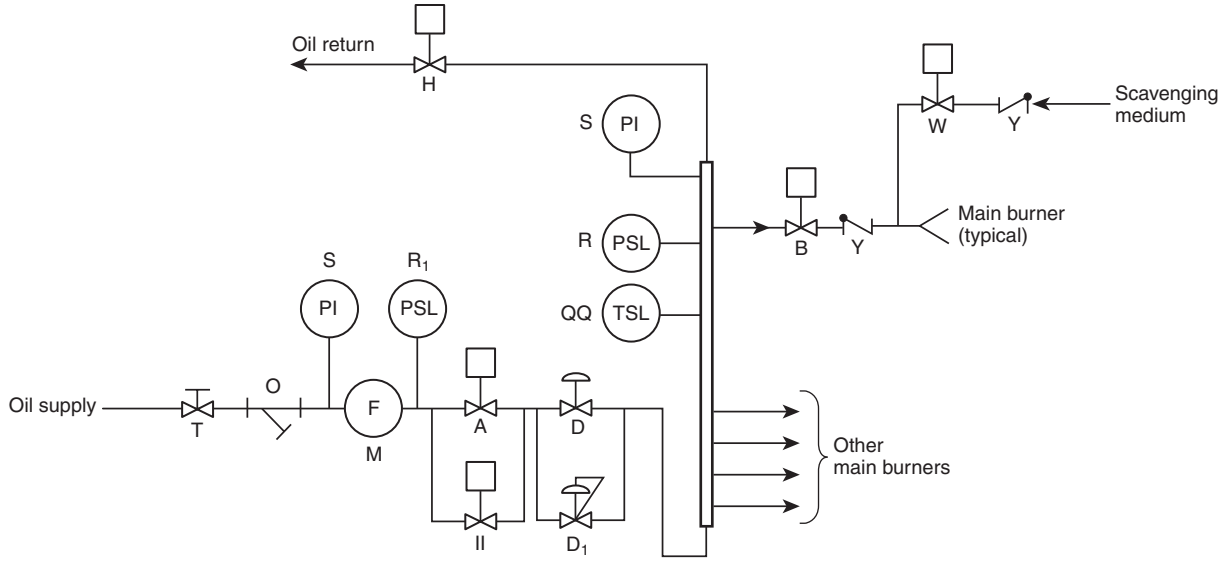

A Main safety shutoff valve
B Individual burner safety shutoff valve
D Main fuel control valve
D_1 Main fuel bypass control valve (optional)
H Recirculating valve (optional for unheated oil)
II Circulating valve (optional for unheated oil)
M Flowmeter
O Cleaner or strainer
QQ Low temperature or high viscosity alarm (optional for unheated oil)
R Burner header low fuel pressure interlock
R_1 Low fuel pressure interlock (alternate location for R)
S Fuel pressure gauge
T Manual shutoff valve
W Scavenging valve
Y Check valve

FIGURE A.8.8.5.8(i) Typical Mechanical Atomizing Main Liquid Fuel Duct Burner System.

Copyright 2014 National Fire Protection Association (NFPA). Licensed, by agreement, for individual use and download on October 4, 2014 to LEADER and READER for designated user PATTARAPORN SRITRAKOOL. No other reproduction or transmission in any form permitted without written permission of NFPA. For inquires or to report unauthorized use, contact licensing@nfpa.org.

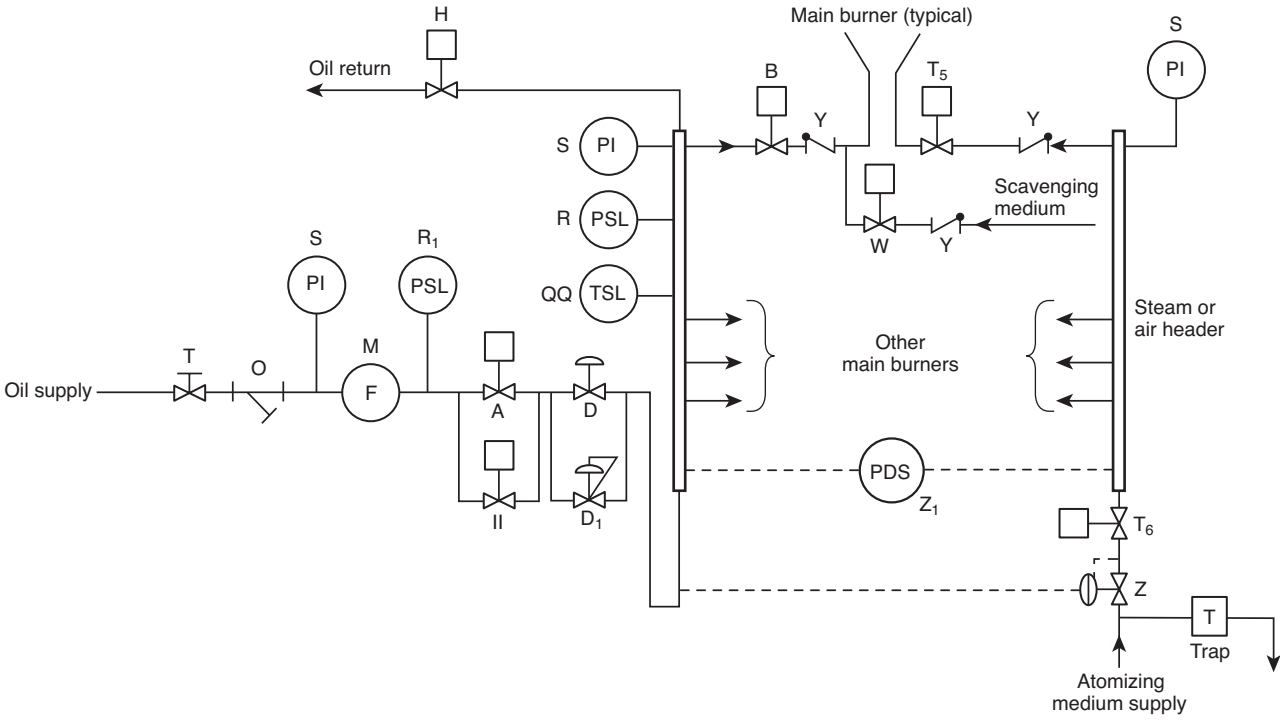

A Main safety shutoff valve
B Individual burner safety shutoff valve
D Main fuel control valve
D_1 Main fuel bypass control valve (optional)
H Recirculating valve (optional for unheated oil)
II Circulating valve (optional for unheated oil)
M Flowmeter
O Cleaner or strainer
QQ Low-temperature or high-viscosity alarm (optional for unheated oil)
R Burner header low fuel pressure interlock
R_1 Low fuel pressure interlock (alternate location for R)
S Fuel pressure gauge
T Manual shutoff valve
T_5 Atomizing medium individual burner shutoff valve, automatic
T_6 Atomizing medium header shutoff valve, automatic (alternate to T_5)
W Scavenging valve
Y Check valve
Z Differential pressure control valve
Z_1 Differential pressure alarm and trip interlock

FIGURE A.8.8.5.8(j) Typical Steam or Air Atomizing Main Liquid Fuel Duct Burner System.

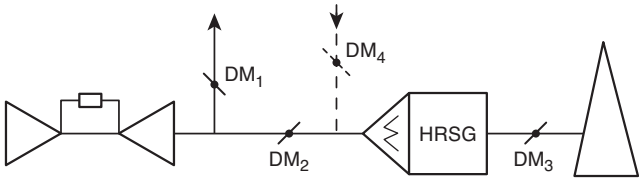

DM_1 Bypass damper
DM_2 HRSG isolation damper
DM_3 Stack damper
DM_4 Air inlet damper

DM_1 allows combustion turbine exhaust gas to bypass the HRSG.

DM_2 blocks combustion turbine exhaust gas from entering the HRSG. A single unit combination of DM_1 and DM_2 is commonly referred to as a diverter damper.

DM_3 closes the stack to prevent loss of heat during nonoperating conditions.

DM_4 allows ambient air to enter the HRSG.

FIGURE A.8.9.1 Damper Terminology.

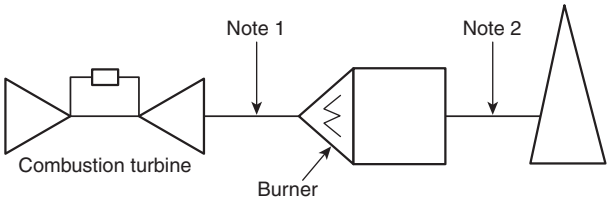

Notes:

1. The fresh air inlet portion can include but is not limited to a bypass damper, an HRSG isolation damper, an air inlet damper, or a forced draft fresh air fan.
2. The outlet duct can include but is not limited to an induced draft fan, an HRSG isolation damper, or a stack damper.

FIGURE A.8.10 Combustion Turbine and Fired HRSG with Fresh Air Firing Capability.

Copyright 2014 National Fire Protection Association (NFPA). Licensed, by agreement, for individual use and download on October 4, 2014 to LEADER and READER for designated user PATTARAPORN SRITRAKOOL. No other reproduction or transmission in any form permitted without written permission of NFPA. For inquires or to report unauthorized use, contact licensing@nfpa.org.

(2) *Classifying the pulverized fuel.* An essential characteristic of the pulverized product is its fineness. It is desirable that the pulverized fuel system minimize variation in fineness, because pulverizer parts exhibit wear and fuel properties change over the anticipated range. For this purpose, most pulverizers are equipped with adjustable classifiers or achieve some adjustment of fineness by varying air flow or other means.

(3) *Transporting and distributing the pulverized fuel.* The pulverized fuel should be transported directly to one or more burners, to one or more air-fuel separation devices, or to one or more bins or lock hoppers for intermediate storage.

(4) *Refuse removal.* It is desirable that foreign, hard-to-grind material be removed from the fuel before it is fed to the pulverizers; however, it is advisable that the pulverizers either reject or tolerate reasonable amounts of such materials so that damage or interruption of service does not result.

A.9.3.2 The design, operation, and maintenance of a pulverized fuel system should recognize certain inherent hazards, as outlined in A.9.3.2(1) through A.9.3.2(17).

(1) An uninterrupted, controllable, raw fuel supply is essential to minimize fires and explosions within the system. Interruptions and control problems in the fuel supply can be caused by worn equipment, excessive surface moisture, large or unusual fuel sizing, or foreign substances, including iron, wood, rags, excelsior, or rock. Compositions of certain clays (i.e., Bentonitic or mixed layers), which are contained in some coal seams, can cause interruptions in coal flow.

(2) The purchaser or the purchaser's designated representative should be aware of the wide range in material-handling characteristics of fuel that are related to differences in moisture, size distribution, and consolidation characteristics. The probable range in these characteristics for the fuels to be used and a determination of time consolidation shear values over these ranges are prerequisites for obtaining a bunker design that provides the desired flow characteristics over the range of fuels to be used. If the fuel is of a nature in which spontaneous combustion in the raw fuel bunker is likely to occur even when equipment is in service, the bunker design should be a mass flow design.

(3) A fire that is ahead of or in the pulverizer usually causes an abnormal increase in temperature of the equipment or of the mixture leaving the pulverizer. Fires are caused by feeding burning fuel from the raw fuel bin; by spontaneous combustion of an accumulation of fuel or foreign material in the pulverizer, piping, or burners; or by operating at abnormally high temperatures.

(4) Fires in burner pipes or other parts of pulverized fuel systems after the pulverizer generally will not be detected by an abnormal increase in pulverizer outlet temperature. Temperature sensors on pipes or in or on other components of the system can be used to detect these fires.

(5) Abnormally hot, smoldering, or burning raw fuel that is ahead of the pulverizer should be considered serious and should be dealt with promptly.

(6) Transport air is used to convey pulverized fuel from the pulverizer through pipes. Malfunction or maloperation introduces several hazards. For example, incorrect procedural steps for removing a burner from service will cause settling of pulverized fuel in the burner pipes. Leakage of pulverized fuel from an operating pulverizer through the burner valve into an idle burner pipe will cause pulverized fuel to settle in the burner pipe. Leakage of gas or air through a burner valve will increase the potential for fire in an idle pulverizer. Procedures to prevent such hazards are defined in Chapter 6.

(7) Pulverizers that are tripped under load will have fuel remaining in the hot pulverizer, burner piping, and burners. These accumulations increase the potential for spontaneous combustion or explosion of the fuel.

(8) Fuel systems are hazardous when fuel escapes into the surrounding atmosphere or when air enters an inerted system.

(9) Oxidation of fuel has the potential to raise the temperature to a point where autocombustion or spontaneous combustion occurs. This characteristic constitutes a special hazard with certain fuels and fuel mixtures.

(10) Accumulations of fuel in the pulverizer increase the potential for fires. Causes of fuel accumulation include but are not limited to design, conditions of wear, and insufficient drying, indicated by too low a pulverizer outlet mixture temperature.

(11) Excessive pulverizer outlet mixture temperatures increase the possibility of pulverizer fires and increase the potential for fuel accumulation on burner parts.

(12) Gases are released from freshly crushed fuel. Accumulations of flammable or explosive mixtures occur in bins or other enclosed areas.

(13) Hot air flowing back into the fuel bunker constitutes a hazard.

(14) To ensure compatibility of the type of fuel to be pulverized, a quality definition of the fuel is required. The equipment designer, the agency responsible for procurement of the fuel, and the operating department should use this definition. Volatility, moisture, ash content, maximum size and distribution, grindability, corrosiveness, abrasiveness, and other characteristics should be given close attention.

(15) A pulverized fuel system is designed for a specific range of fuel characteristics. Fuels that differ widely from the design range increase the risk of serious operating difficulties and produce a potential safety hazard. Procedures should be exercised to make sure that all received fuels are within the specific range of the fuel-handling and fuel-burning equipment.

(16) Insufficient personnel training, incomplete maintenance programs, and operation of excessively worn equipment increase the potential for fires and explosions.

(17) Accumulation of pulverized fuel in air ducts or pipes, particularly those shared by a group of pulverizers, is hazardous.

A.9.4.6.1.3 Some parts of the pulverized fuel system, such as large flat areas and sharp corners, can be subjected to shock wave pressures.

A.9.4.6.1.6 This ductwork is exposed to explosion pressures from the pulverizer in the event of an explosion.

A.9.4.6.1.9 See NFPA 68, *Standard on Explosion Protection by Deflagration Venting*.

A.9.5.2.2 *Operation with burner(s) out of service.* Operation of the pulverizer-burner system with less than the full complement of burners served by a pulverizer, unless the system is designed specifically for such operation, creates the potential for fires and explosion. If not so designed, extra precautions should be used in isolating out-of-service burners.

Copyright 2014 National Fire Protection Association (NFPA). Licensed, by agreement, for individual use and download on October 4, 2014 to LEADER and READER for designated user PATTARAPORN SRITRAKOOL. No other reproduction or transmission in any form permitted without written permission of NFPA. For inquires or to report unauthorized use, contact licensing@nfpa.org.

A.9.5.2.2.3 Some applications utilize auxiliary air dampers to maintain burner line velocities at or above minimum to transport the fuel without settling.

A.10.1 An examination of numerous reports of boiler explosions in stoker-fired units utilizing solid fuels indicates that the occurrence of small explosions or furnace puffs has been far more frequent than is usually recognized.

A.10.2 See also Annex G.

The following areas of stoker-fired boilers routinely require maintenance attention:

(1) *Undergrate air distribution.* Air must be distributed evenly through the grate in order to come in contact with the fuel at the desired location. Air distribution holes in the grates must be kept clear. Some grates are sectioned into zones to allow control of burning and to improve efficiency. Grate air seals and air zone dampers must be in good repair to prevent air from bypassing the fuel bed and to distribute air properly between zones.
(2) *Fuel feed mechanism.* The fuel feed mechanism must be properly adjusted to provide an even fuel bed. Uneven fuel beds lead to poor combustion, clinker formation, inefficient operation, and potential grate damage.
(3) *Casing and ductwork.* Air infiltration into the furnace can cause improper fuel combustion due to insufficient air distribution to the fuel and erroneous oxygen analyzer readings. This can result in grate damage, smoking conditions, and reduced efficiency. All potential leak areas should be checked periodically. These areas include access doors, casing and brickwork, and expansion joints.
(4) *Grate.* Grate drive mechanisms require periodic maintenance to ensure proper lubrication and operation. Grate alignment and tension must be checked to prevent binding and potential hang-up. Grate drive shear pins should be replaced with identical pins. Substituting harder shear pins can result in damage to other components. Air distribution holes in the grate should be kept clear.
(5) *Tuyeres.* Air tuyeres must be checked for plugging and burnout. These are necessary for proper air sealing and feeder cooling.
(6) *Nozzles.* Overfire air and cinder return nozzles must be checked for plugging and burnout.
(7) *Air dampers.* Air dampers should be checked for proper stroke and position.
(8) *Combustion control system.* Boiler controls should be kept in proper operating condition through regular operation and calibration checks.

A.10.2.1.2.2.3 See NFPA 850, *Recommended Practice for Fire Protection for Electric Generating Plants and High Voltage Direct Current Converter Stations*, for additional information.

A.10.2.1.2.3 Consideration should be given to the potential effects resulting from improper ID fan start-up or malfunction of the furnace draft controlling equipment. Consideration also should be given to the use of protective control loops similar to those shown in Chapter 6, modified or simplified in accordance with the manufacturer's recommendations to apply to stoker usage.

A.10.4.3.4 Start-up procedures for other fuels as described in Annex F are dependent on the characteristics of the particular fuel.

A.10.4.8 With multifuel arrangements, it is necessary to measure the airflow to the stoker as well as the auxiliary fuel supply. When the auxiliary fuel is fired through burners and the auxiliary is following boiler demand, the forced draft system should have a controller upstream from the burner control damper that maintains a constant pressure to the supply duct. This will ensure a repeatable supply of air to the stoker. Conversely, it will ensure a repeatable supply of air to the auxiliary burners. Care must be taken to maintain an adequate amount of excess air at all times by continuously observing the flame or the air-fuel ratio or the oxygen indicator, where provided. When multiple fuels are being fired, care should be taken in interpreting the oxygen analyzer readings, especially with systems that have a single point measurement.

A.10.8.1 Use of ash hopper vibrators can minimize problems with bridged fly ash.

Annex B Multiple Burner Boiler Supervised Manual Systems

This annex is not a part of the requirements of this NFPA document but is included for informational purposes only.

B.1 General. Annex B provides information on gas- and oil-fired supervised manual systems. This annex provides a method by which to identify or compare old systems to ensure they were installed and maintained in accordance with the "grandfathered" method and is reprinted here for convenience of those where such systems are in existence. This annex does not apply to new construction or to alterations to existing boilers.

B.1.1 System Requirements. This section provides minimum requirements for the design, installation, and operation of multiple burner, fuel-fired boilers operated from the boiler front and describes functional requirements for proper operation. No specific degree of automation beyond the minimum specified safeguards is defined or recommended, since this is subject to factors such as the physical size of units, use of central control rooms, degree of reliability desired, and availability of experienced operating personnel. This section defines and specifies the requirements of the operating systems that are used under the following conditions:

(1) A trained operator needs to be in constant attendance.
(2) The start-up or normal shutdown of any burner needs to be accomplished by an operator at the burner locations.
(3) The operator needs to have direct visual access to view the furnace.
(4) Suitable equipment needs to be provided to control furnace inputs and their relative rates of change to maintain an air-fuel mixture within the limits necessary for continuous combustion and stable flame throughout the controllable operating range of the unit. For minimum recommended equipment, see Figure B.1.1(a) and Figure B.1.1(b) for gas firing systems and Figure B.1.1(c) through Figure B.1.1(e) for oil firing systems.

B.1.2 System Description. This operating system is defined as a *supervised manual system.* A supervised manual system is one in which a trained operator has primary responsibility for the proper start-up, operation, and normal shutdown of a boiler with interlocks to ensure that the operation follows established proper procedures. This system includes certain interlocks for preventing improper operator action, certain safety trips and flame supervisions, and an indication of the status of the start-up sequence. The operator(s) of this type of system need to be provided with and operate the system in accordance with a written set of operating instructions for each boiler unit.

Copyright 2014 National Fire Protection Association (NFPA). Licensed, by agreement, for individual use and download on October 4, 2014 to LEADER and READER for designated user PATTARAPORN SRITRAKOOL. No other reproduction or transmission in any form permitted without written permission of NFPA. For inquires or to report unauthorized use, contact licensing@nfpa.org.

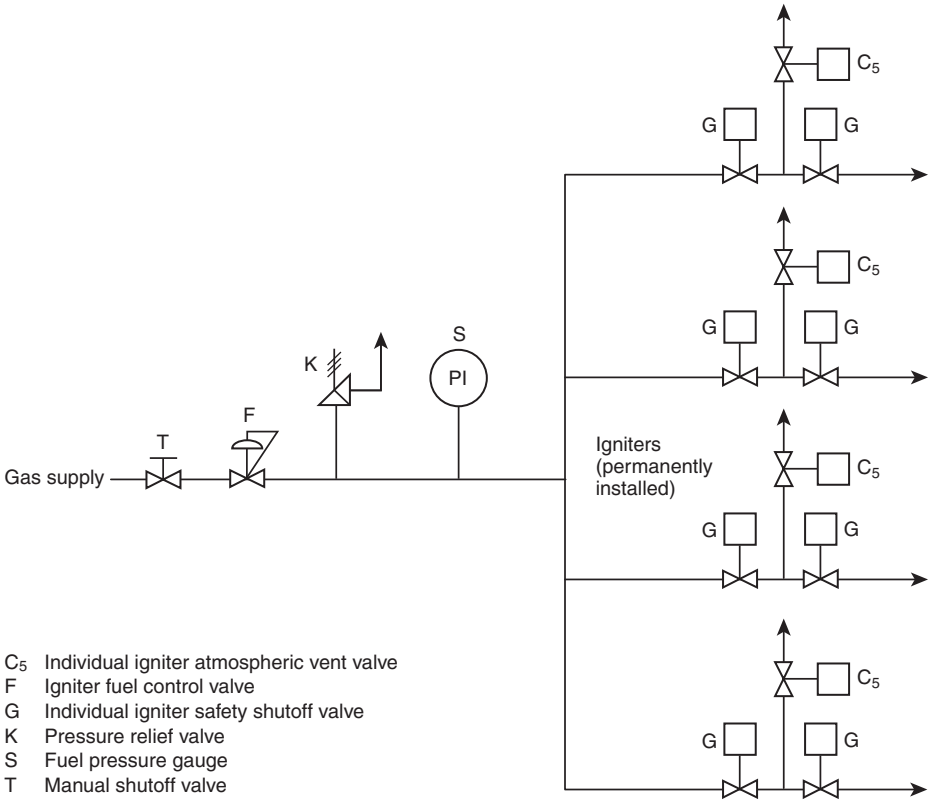

FIGURE B.1.1(a) Typical Fuel Gas Ignition System — Supervised Manual.

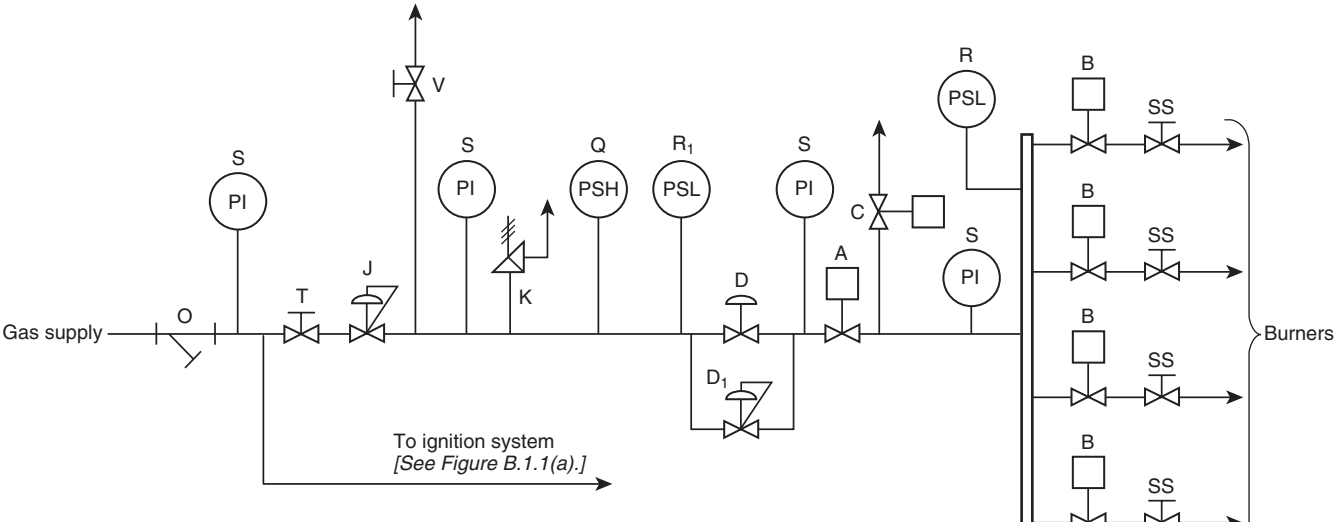

FIGURE B.1.1(b) Typical Main Burner Fuel Supply System for Fuel Gas-Fired Multiple Burner Boiler — Supervised Manual.

Copyright 2014 National Fire Protection Association (NFPA). Licensed, by agreement, for individual use and download on October 4, 2014 to LEADER and READER for designated user PATTARAPORN SRITRAKOOL. No other reproduction or transmission in any form permitted without written permission of NFPA. For inquires or to report unauthorized use, contact licensing@nfpa.org.

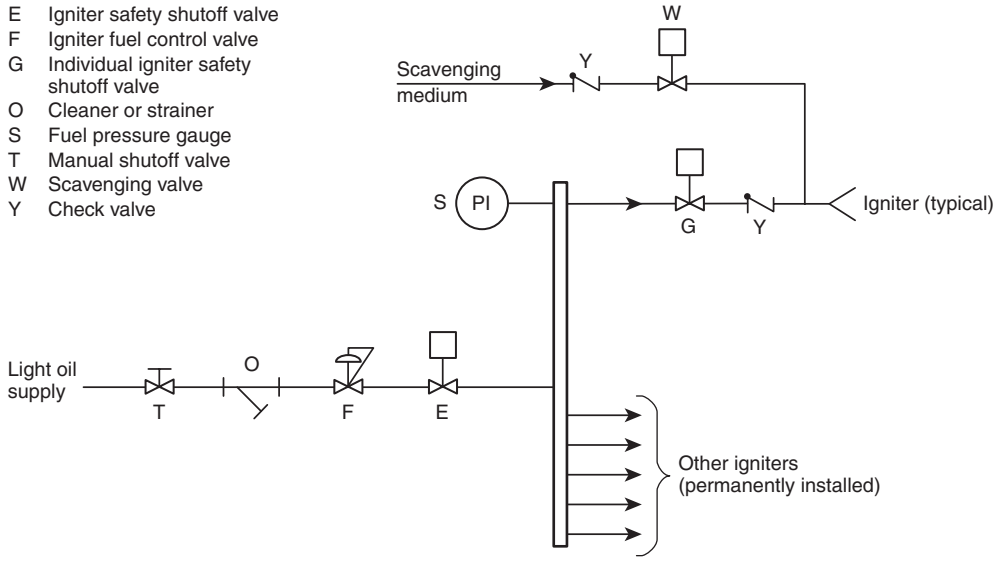

FIGURE B.1.1(c) Typical Mechanical Atomizing Light Oil Igniter System — Supervised Manual.

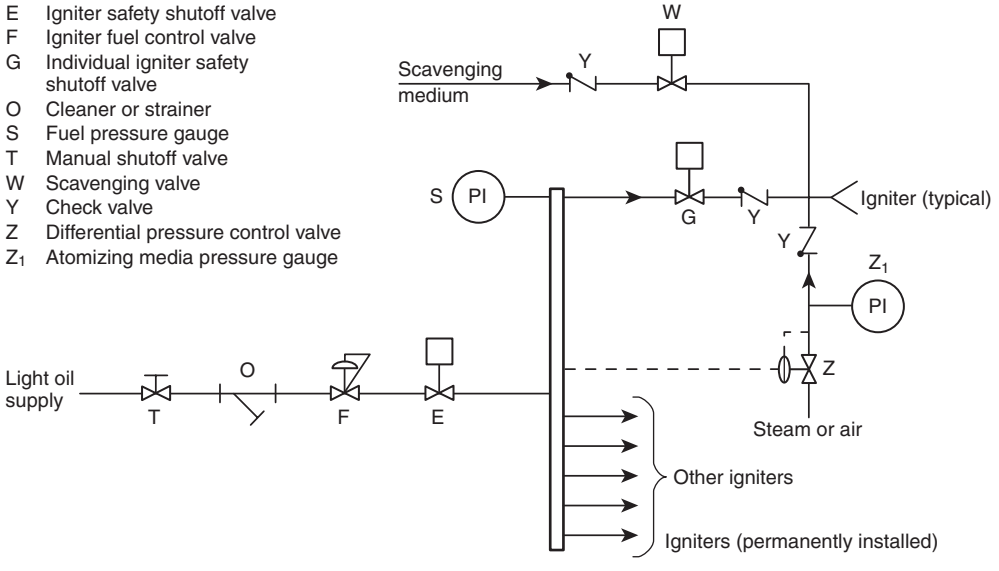

FIGURE B.1.1(d) Typical Steam or Air Atomizing Light Oil Igniter System — Supervised Manual.

B.2 Boiler Front Control — Gas-Fired Units.

B.2.1 Fundamental Principles. The written instructions need to include, but are not limited to, the following:

(1) The airflow needs to be adjusted to the purge rate and a unit purge performed.
(2) The purge airflow rate needs to be maintained continuously from purge initiation through the light-off cycle. If the airflow is not maintained, the prefiring cycle needs to be repeated.
(3) If flame on the first igniter is not established within 10 seconds, the individual igniter safety shutoff valve needs to be closed and the cause of failure to ignite determined and corrected. With airflow maintained at the purge rate, repurge is not needed, but at least 1 minute should elapse before attempting a retrial.
(4) The operator needs to observe the igniter operation continuously while opening the first individual burner supervisory shutoff valve. If the main burner flame is not proven within 10 seconds after the individual burner shutoff valve leaves the closed position, a master fuel trip occurs.
(5) After each stable main burner flame is established, the igniter needs to be shut off unless classified as Class 1 or Class 2. The stability of the main burner flame needs to be verified.

Copyright 2014 National Fire Protection Association (NFPA). Licensed, by agreement, for individual use and download on October 4, 2014 to LEADER and READER for designated user PATTARAPORN SRITRAKOOL. No other reproduction or transmission in any form permitted without written permission of NFPA. For inquires or to report unauthorized use, contact licensing@nfpa.org.

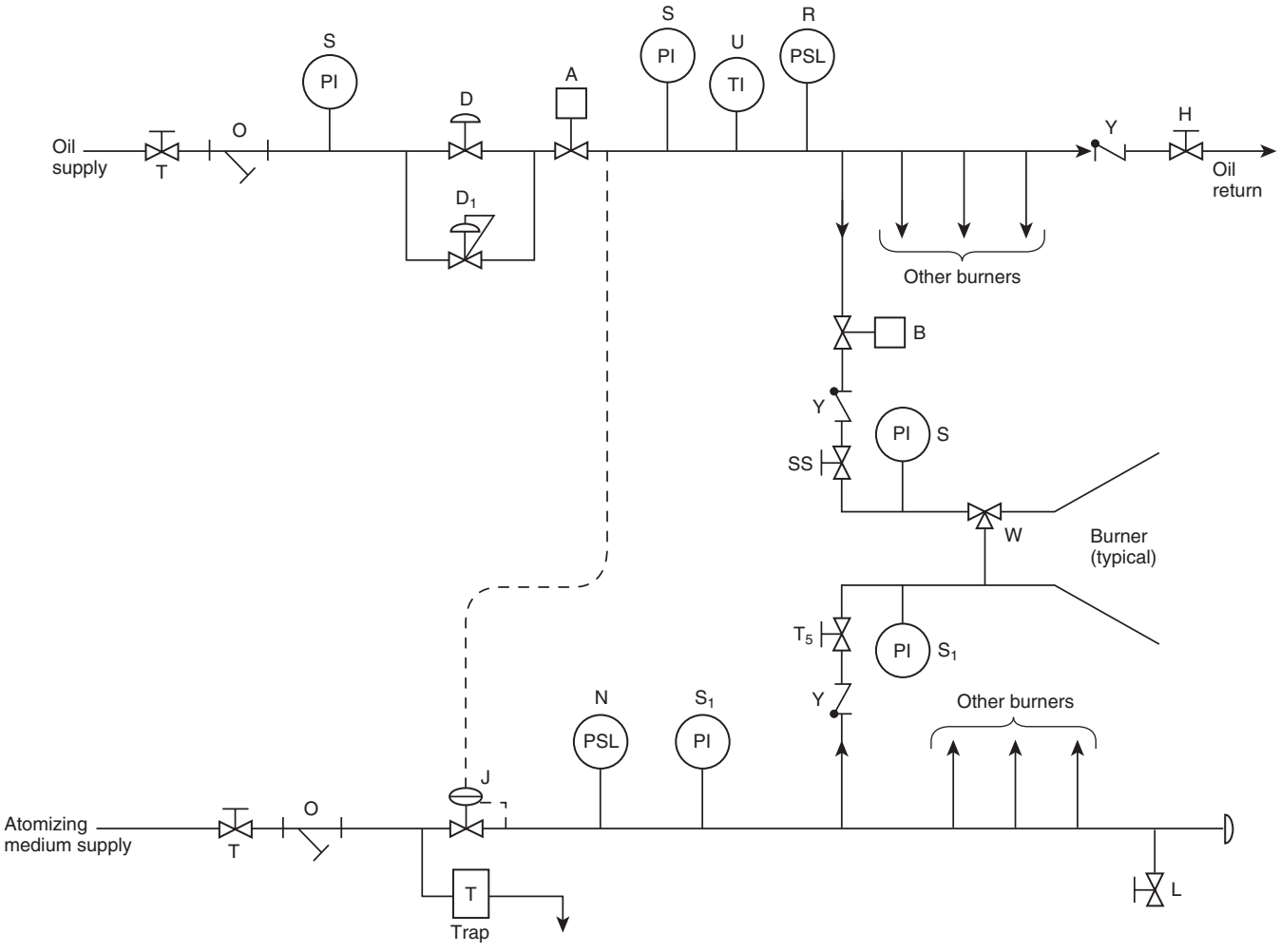

A	Main safety shutoff valve	R	Burner header low fuel pressure switch
B	Individual burner safety shutoff valve	S	Fuel pressure gauge
D	Main fuel control valve	S_1	Atomizing medium pressure gauge
D_1	Main fuel bypass control valve	SS	Individual burner supervisory shutoff valve, manual
H	Recirculating valve (optional for unheated oil)	T	Manual shutoff valve
J	Atomizing medium pressure regulator	T_5	Atomizing medium individual burner shutoff valve, manual
L	Bleed valve	U	Thermometer
N	Atomizing medium low pressure switch	W	Scavenging valve
O	Cleaner or strainer	Y	Check valve

FIGURE B.1.1(e) Typical Steam or Air Atomizing Main Oil Burner System — Supervised Manual.

(6) Burner(s) are to be lighted only from their associated igniter(s).
(7) The operator is to observe the main flame stability while making any register or burner damper adjustments. (This is more critical in two-burner boilers.)
(8) After each successive burner light-off, the operator is to verify the flame stability of all operating burners.
(9) If a second or succeeding burner igniter does not light off immediately after its individual igniter safety shutoff valves have been opened, the operator is to close the individual igniter safety shutoff valves and determine and correct the cause of the igniter's failure to light. In all cases, at least 1 minute must elapse before the next light-off is attempted.
(10) If a second or succeeding main burner flame is not established, the operator is to close the individual burner supervisory shutoff valve and the individual igniter safety shutoff valves immediately, open the burner register or damper to firing position, and determine and correct the cause of its failure to ignite. At least 1 minute must elapse before attempting to light this or any other igniter.
(11) Operation at less than 25 percent of load is permitted, provided burners maintain stable flame and airflow is maintained at purge rate regardless of the actual load or fuel input.
(12) Although water side control is not directly related to combustion safety, it is to be given recognition, and low water

Copyright 2014 National Fire Protection Association (NFPA). Licensed, by agreement, for individual use and download on October 4, 2014 to LEADER and READER for designated user PATTARAPORN SRITRAKOOL. No other reproduction or transmission in any form permitted without written permission of NFPA. For inquires or to report unauthorized use, contact licensing@nfpa.org.

level in the steam drum monitored and alarmed. Interlock tripping should be considered.

(13) For direct electric (Class 3 Special) igniters, B.2.1(3) and B.2.1(9) need not apply.

B.2.2 Interlocks, Master Fuel Trip. Any of the following conditions initiates a master fuel trip with first-out annunciation:

(1) High fuel supply pressure
(2) Fuel pressure at the burner below the minimum established by the burner manufacturer or by trial, where measurable; where fuel pressure at the burner is not measurable, a low fuel pressure trip upstream of the control valve
(3) Loss of all forced draft (FD) fans
(4) Loss of all induced draft (ID) fans, if applicable
(5) Operation of the emergency trip switch by the operator
(6) Loss of all flame
(7) Loss of control energy if fuel flow to burners is affected in such an event

B.2.3 Loss of Individual Burner or Igniter Flame.

B.2.3.1 Loss of flame at an individual igniter causes the igniter individual safety shutoff valve to close and the associated sparks to de-energize.

B.2.3.2 Loss of flame at an individual burner causes the burner individual safety shutoff valve to close.

B.2.3.3 The conditions of B.2.3.1 and B.2.3.2 should be indicated.

B.2.4 Operating Cycle. The following operating sequences are based on a typical system. Certain provisions and sequences do not apply where other systems are used. However, the principles outlined in these sequences should be followed, and all applicable interlocks, trips, alarms, or their equivalents provided.

B.2.4.1 Prefiring Cycle. The operator should follow the steps listed in Table B.2.4.1 when starting a supervised manual unit and satisfy the interlocks at each step. Establish control system energy, power and water levels, and fuel supply. Inspect furnace and gas passages to determine if they are in good repair. Prior to start-up, determine that the unit and its associated systems are evacuated of all personnel and all access and inspection doors are closed.

B.2.4.2 Light-Off Cycle — First Igniter. This cycle needs to follow prefiring immediately, with all interlocks satisfied. Follow the open register procedure purge during the light-off procedure. The operator should follow the steps listed in Table B.2.4.2 and satisfy the interlocks at each step.

B.2.4.3 Light-Off Cycle — Subsequent Igniters. The operator should follow the steps listed in Table B.2.4.3 and satisfy the interlocks at each step.

B.2.4.4 Light-Off Cycle — First Main Burner. The operator is to follow the steps listed in Table B.2.4.4 and satisfy the interlocks at each step.

B.2.4.5 Light-Off Cycle for Subsequent Main Burners at Light-Off Fuel Pressure. The cycle given in Table B.2.4.5 should be performed after the igniter flame for the burner has been proved and fuel pressure is controlled by the main fuel bypass control valve.

B.2.4.6 Light-Off Cycle for Additional Burner(s) When Fuel Pressure of Operating Burner(s) Is Above Light-Off Pressure. The cycle given in Table B.2.4.6 should be performed. Fuel pressure is controlled by the main fuel control valve.

B.2.4.7 Normal Shutdown Cycle. The operator should follow the steps listed in Table B.2.4.7 and satisfy the interlocks at each step.

B.2.4.8 Emergency Shutdown.

B.2.4.8.1 An emergency shutdown initiates a master fuel trip.

B.2.4.8.2 For the conditions that initiate an emergency shutdown, see B.2.2.

B.2.4.9 Operator Actions Following an Emergency Shutdown. See Figure B.1.1(a) and Figure B.1.1(b).

B.2.4.9.1 Close all individual burner supervisory shutoff valves. Burner register positions remain unchanged.

B.2.4.9.2 The unit should be purged in accordance with the following procedure:

(1) Fans that are operating after the master fuel trip should be continued in service.
(2) Airflow should not be immediately increased by deliberate manual or automatic control action.
(3) If the airflow is above the purge rate, decrease it gradually to this value and purge the unit.
(4) If the airflow is below the purge rate at the time of the trip, continue at the existing rate for 5 minutes and then gradually increase to the purge rate and hold at this value for a unit purge.

B.2.4.9.3 Where the master fuel trip is caused by loss of draft fans, or draft fans also have tripped, all dampers in the air and flue gas passages of the unit should be slowly opened to the fully open position to create as much natural draft as possible to ventilate the unit. Opening fan dampers should be timed or controlled to avoid excessive positive or negative furnace pressure transients during fan coastdown. Maintain this condition for not less than 15 minutes. At the end of this period, the flow control dampers should be closed and the fan(s) should be started immediately. Airflow should be increased to at least purge rate.

B.2.4.9.4 The cause of emergency shutdown should be determined and corrected.

B.2.4.9.5 Perform the first igniter light-off cycle *(see B.2.4.2)* if restart of unit is desired.

B.2.4.9.6 If it is desired to remove the boiler from service for a period of time, the fans should be shut down on completion of unit purge and manual shutoff valves should be closed.

B.2.5 Air Heaters. Where provided, regenerative air heaters and gas recirculation fans should be operated in a manner recommended by the boiler manufacturer.

B.3 Boiler Front Control, Oil-Fired Units.

B.3.1 Fundamental Principles. The written instructions should include the following:

(1) The airflow rate should be adjusted to the purge rate, and a unit purge should be performed.
(2) The purge airflow rate should be maintained continuously from purge initiation through the light-off cycle. If the airflow is not maintained, the prefiring cycle should be repeated.
(3) If flame on the first igniter is not established within 10 seconds, the individual igniter safety shutoff valve should be closed and the cause of failure to ignite determined and corrected. With airflow maintained at the purge rate, repurge is not needed, but at least 1 minute should elapse before attempting a retrial.

Copyright 2014 National Fire Protection Association (NFPA). Licensed, by agreement, for individual use and download on October 4, 2014 to LEADER and READER for designated user PATTARAPORN SRITRAKOOL. No other reproduction or transmission in any form permitted without written permission of NFPA. For inquires or to report unauthorized use, contact licensing@nfpa.org.

Table B.2.4.1 Operator Actions, Prefiring Cycle

Operator Actions*	Interlock Functions
(1) Confirm individual burner safety shutoff valves are closed.	(1) Proved closed.
(2) Confirm individual burner supervisory shutoff valves are closed.	(2) Proved closed.
(3) Confirm main safety shutoff valve is closed.	(3) Proved closed.
(4) Confirm main fuel control valve is in light-off position.	(4) Proved.
(5) Open all burner registers to purge position.	(5) None.
(6) Start fan(s).	(6) Prove fan(s) operating.
(7) Open main damper(s) to purge positions.	(7) Prove purge airflow rate. *[See B.2.1(1) and B.2.1(2).]*
(8) Start purge timer and perform a unit purge.	(8) None.
(9) Immediately proceed with light-off cycle after completion of purge.	(9) Repurge if airflow rate drops below purge rate prior to initiation of light-off cycle.

Note: See Figure B.1.1(a) and Figure B.1.1(b).
*Actions are not necessarily performed in the order shown.

Table B.2.4.2 Operator Actions, Light-Off Cycle — First Igniter

Operator Actions	Interlock Functions
(1) Maintain purge airflow rate.	(1) Prove that airflow has not dropped below purge rate.
(2) Adjust register of burner to be lighted to light-off position if necessary.	(2) Prove purge airflow.
(3) Confirm manual main atmospheric vent valve is open.	(3) None.
(4) Energize igniter for first burner. For direct electric ignition, omit step (5) and proceed directly to step (4) in Table B.2.4.4.	(4) Prove flame within 10 seconds. If flame is not proved, safety shutoff valves for this igniter should close and spark should be de-energized.
(5) If ignition flame is not established, determine cause and make necessary corrections. Burner register should be opened to purge position for at least 1 minute before repeating light-off cycle.	(5) None.

Note: See Figure B.1.1(a) and Figure B.1.1(b).

Table B.2.4.3 Operator Actions, Light-Off Cycle — Subsequent Igniters

Operator Actions	Interlock Functions
(1) Adjust register of burner to be lighted to light-off position, if necessary.	(1) Prove that airflow has not dropped below purge rate.
(2) Energize igniter. For direct electric igniters, omit step (3) and proceed directly to step (4) in Table B.2.4.4.	(2) Prove flame within 10 seconds. If flame is not proved, safety shutoff valves for this igniter should close and spark should be de-energized.
(3) If igniter flame is not established, determine cause and make necessary corrections. Burner register should be opened to purge position for at least 1 minute before repeating light-off cycle.	(3) None.

Copyright 2014 National Fire Protection Association (NFPA). Licensed, by agreement, for individual use and download on October 4, 2014 to LEADER and READER for designated user PATTARAPORN SRITRAKOOL. No other reproduction or transmission in any form permitted without written permission of NFPA. For inquires or to report unauthorized use, contact licensing@nfpa.org.

Table B.2.4.4 Operator Actions, Light-Off Cycle — First Main Burner

Operator Actions	Interlock Functions
(1) Adjust register of burner to be lighted to light-off position, if necessary.	(1) Prove that airflow has not dropped below purge rate.
(2) Verify igniter flame is present.	(2) Proved.
(3) Confirm main burner header vent valve is open.	(3) None.
(4) Open main safety shutoff valve. Main burner header vent valve will close.	(4) Individual burner supervisory shutoff valves closed.
(5) Confirm burner gas pressure is being controlled by the main fuel bypass control valve and is at light-off pressure.	(5) None.
(6) Open individual burner safety shutoff valve at burner being lighted.	(6) Igniter flame proved on burner being lighted and individual burner supervisory shutoff valve proved closed.
(7) Slowly open individual burner supervisory shutoff valve until fully open to establish this main burner flame.	(7) Starts main burner trial for ignition. If main burner flame is not proved within 10 seconds after the valve leaves the closed position, a master fuel trip is effected.
(8) If first main burner flame is not established, determine cause and correct conditions. Repeat actions beginning with prefiring cycle. *(See B.2.4.1.)*	(8) Requires repeat of purge cycle.
(9) After main burner flame is established, adjust burner register to firing position, as necessary.	(9) None.
(10) Slowly close manual main atmospheric vent valve while observing header gas pressure.	(10) None.
(11) Unless classified as Class 1 or Class 2, igniter should be removed from service; visually confirm main flame stability.	(11) None.

Note: See Figure B.1.1(a) and Figure B.1.1(b).

(4) The operator should observe the igniter operation continuously while opening the first individual burner supervisory shutoff valve. If the main burner flame is not proven within 10 seconds after the individual burner shutoff valve leaves the closed position, a master fuel trip should occur.
(5) After each stable main burner flame is established, the igniter should be shut off unless classified as Class 1 or Class 2. The stability of the main burner flame should be verified.
(6) Burners should be lighted only from their associated igniter(s).
(7) The operator should observe the main flame stability while making any register or burner damper adjustments. (This is more critical in two-burner boilers.)
(8) After each successive burner light-off, the operator should verify the flame stability of all operating burners.
(9) If a second or succeeding burner igniter does not light off immediately after its individual igniter safety shutoff valves have been opened, the operator should close the individual igniter safety shutoff valves and determine and correct the cause of its failure to light. In all cases, at least 1 minute should elapse before the next light-off is attempted.
(10) If a second or succeeding main burner flame is not established, the operator should close the individual burner supervisory shutoff valve and the individual igniter safety shutoff valves immediately, open the burner register or damper to firing position, and determine and correct the cause of its failure to ignite. At least 1 minute should elapse before attempting to light this or any other igniter.
(11) Operation at less than 25 percent of load is permitted, provided burners maintain stable flame and airflow is maintained at purge rate regardless of the actual load or fuel input.
(12) Although water side control is not directly related to combustion safety, it should be given recognition, and low water level in the steam drum monitored and alarmed. Consider interlock tripping.
(13) For direct electric (Class 3 Special) igniters, B.3.1(3) and B.3.1(9) need not apply.

B.3.2 Interlocks, Master Fuel Trip. Any of the following conditions should initiate a master fuel trip with first-out annunciation:

(1) Fuel pressure at the burner below the minimum established by the burner manufacturer or by trial
(2) Loss of all FD fans
(3) Loss of all ID fans, if applicable
(4) Operation of the emergency trip switch by the operator
(5) Loss of atomizing medium to the boiler
(6) Loss of all flame
(7) Loss of control energy if the fuel flow to the burners is affected in such an event

Copyright 2014 National Fire Protection Association (NFPA). Licensed, by agreement, for individual use and download on October 4, 2014 to LEADER and READER for designated user PATTARAPORN SRITRAKOOL. No other reproduction or transmission in any form permitted without written permission of NFPA. For inquires or to report unauthorized use, contact licensing@nfpa.org.

Table B.2.4.5 Operator Actions, Light-Off Cycle for Subsequent Main Burners at Light-Off Fuel Pressure

Operator Actions	Interlock Functions
(1) Adjust register of burner to be lighted to light-off position if necessary.	(1) Prove that airflow has not dropped below purge rate.
(2) If igniter is fuel fired, verify igniter flame is present.	(2) Proved.
(3) Confirm burner fuel pressure is being controlled by the main fuel bypass control valve and is at light-off pressure.	(3) None.
(4) Open individual burner safety shutoff valve at burner being lighted.	(4) Igniter flame proved on burner being lighted and individual burner supervisory shutoff valve proved closed.
(5) Slowly open individual burner supervisory shutoff valve until fully open to establish this main burner flame.	(5) If the main burner flame is not proved within 10 seconds after the valve leaves its closed position, all fuel to this burner and its igniter is shut off.
(6) If this main burner flame is not established, determine cause and correct conditions. Open burner register to firing position; wait 1 minute before attempting to light this or any other burner. Repeat the steps in Table B.2.4.3 and steps 1 through 5 in Table B.2.4.5.	(6) None.
(7) After main burner flame is established, adjust burner register to firing position, as necessary.	(7) None.
(8) Unless classified as Class 1 or Class 2, igniter should be removed from service; visually confirm main flame stability.	(8) None.

Note: See Figure B.1.1(a) and Figure B.1.1(b).

B.3.3 Loss of Individual Burner or Igniter Flame.

B.3.3.1 Loss of flame at an individual igniter should cause the igniter individual safety shutoff valve to close and the associated sparks to de-energize.

B.3.3.2 Loss of flame at an individual burner should cause the burner individual safety shutoff valve to close.

B.3.3.3 The conditions of B.3.3.1 and B.3.3.2 should be indicated.

B.3.4 Operating Cycle. The following operating sequences are based on a typical system that includes steam-atomized main oil burners. Certain provisions and sequences do not apply where other atomizing media or systems are used. However, the principles outlined in these sequences should be followed, and all applicable interlocks, trips, alarms, or their equivalents should be provided.

B.3.4.1 Prefiring Cycle. The operator should take the steps listed in Table B.3.4.1 when starting a supervised manual unit and satisfy the interlocks at each step. Control system energy, power and water levels, fuel supply, and atomizing medium should be established, if used. Furnace and gas passages should be inspected to determine whether they are in good repair. Prior to start-up, it should be determined that the unit and its associated systems are evacuated of all personnel and all access and inspection doors are closed.

B.3.4.2 Light-Off Cycle — First Igniter. This cycle should follow prefiring immediately with all interlocks satisfied. Follow the open register purge airflow rate principle during the light-off procedure. The operator should follow the steps listed in Table B.3.4.2 and satisfy the interlocks at each step.

B.3.4.3 Light-Off Cycle — Subsequent Igniters. The operator should follow the steps in Table B.3.4.3 and satisfy the interlocks at each step.

B.3.4.4 Light-Off Cycle — First Main Burner. The operator should follow the steps listed in Table B.3.4.4 and satisfy the interlocks at each step.

B.3.4.5 Light-Off Cycle for Subsequent Main Burners at Light-Off Fuel Pressure. This cycle should be performed after the igniter flame for the burner has been proved and fuel pressure is controlled by the main fuel bypass control valve. The operator should follow the steps listed in Table B.3.4.5 and satisfy the interlocks at each step.

B.3.4.6 Light-Off Cycle for Additional Burner(s) When Fuel Pressure of Operating Burner(s) Is Above Light-Off Pressure. Fuel pressure is controlled by the main fuel control valve. The operator should follow the steps listed in Table B.3.4.6 and satisfy the interlocks at each step.

B.3.4.7 Normal Shutdown Cycle. The operator should follow the steps listed in Table B.3.4.7 and satisfy the interlocks at each step.

B.3.4.8 Emergency Shutdown. An emergency shutdown initiates a master fuel trip. For the conditions that initiate an emergency shutdown, see B.3.2.

Copyright 2014 National Fire Protection Association (NFPA). Licensed, by agreement, for individual use and download on October 4, 2014 to LEADER and READER for designated user PATTARAPORN SRITRAKOOL. No other reproduction or transmission in any form permitted without written permission of NFPA. For inquires or to report unauthorized use, contact licensing@nfpa.org.

Table B.2.4.6 Operator Actions, Light-Off Cycle for Additional Burners When Fuel Pressure of Operating Burners Is Above Light-Off Pressure

Operator Actions	Interlock Functions
(1) Place combustion control system on manual; note the value of windbox-to-furnace pressure differential.	(1) None.
(2) Slowly adjust register on burner to be lighted to light-off position while manually adjusting airflow to maintain the windbox-to-furnace differential pressure at the value noted in step (1).	(2) None.
(3) Energize igniter; for direct electric igniters, omit step (4).	(3) Prove flame within 10 seconds. If flame is not proved, safety shutoff valves for this igniter should close and spark should be de-energized.
(4) If igniter flame is not established, determine cause and correct.	(4) None.
(5) Open safety shutoff valve to burner being lighted.	(5) Igniter flame proved and supervisory shutoff valve proved closed.
(6) Slowly open individual supervisory shutoff valve only enough to light burner.	(6) If the main burner flame is not proved within 10 seconds after the valve leaves its closed position, all fuel to this burner and its igniter is shut off.
(7) If the main burner flame is not established, determine cause, correct, wait at least 1 minute, then repeat steps (5) through (8).	(7) None.
(8) With main flame established, open air register to the firing position.	(8) None.
(9) Slowly open supervisory shutoff valve completely but without suddenly dropping header fuel pressure.	(9) None.
(10) Unless classified as Class 1 or Class 2, igniter should be removed from service; visually confirm main flame stability.	(10) None.
(11) Adjust airflow to restore correct fuel-air ratio.	(11) None.
(12) Place combustion control system on automatic, if desired.	(12) None.

Note: See Figure B.1.1(a) and Figure B.1.1(b).

Table B.2.4.7 Operator Actions, Normal Shutdown Cycle

Operator Actions	Interlock Functions
(1) Reduce boiler load until main fuel control valve is closed. Main fuel bypass control valve will assume control at light-off gas pressure. Airflow should not be reduced below purge rate.	(1) None.
(2) Close individual supervisory shutoff valve at each burner and associated igniter valve if in operation. Leave burner register at firing position.	(2) As each burner supervisory shutoff valve is closed, loss of flame will cause its associated safety shutoff valve to close. After last burner supervisory shutoff valve is closed, loss of all flame should cause main safety shutoff valve to close. Main atmospheric vent valve should open.
(3) Perform a unit purge.	(3) None.
(4) Shut down fan(s), if desired.	(4) Loss of airflow interlock is actuated.

Note: See Figure B.1.1(a) and Figure B.1.1(b).

Copyright 2014 National Fire Protection Association (NFPA). Licensed, by agreement, for individual use and download on October 4, 2014 to LEADER and READER for designated user PATTARAPORN SRITRAKOOL. No other reproduction or transmission in any form permitted without written permission of NFPA. For inquires or to report unauthorized use, contact licensing@nfpa.org.

Table B.3.4.1 Operator Actions, Prefiring Cycle

Operator Actions*	Interlock Functions
(1) Inspect furnace for unburned oil accumulations.	(1) None.
(2) Confirm burner guns have proper tips and sprayer plates.	(2) None.
(3) Confirm individual burner safety shutoff valve is closed.	(3) Proved.
(4) Confirm supervisory shutoff valves are closed.	(4) Proved.
(5) Confirm burner gun is in proper position.	(5) None.
(6) Confirm main fuel control valve is in light-off position.	(6) Proved.
(7) Confirm atomizing medium header has been blown free of condensate and header trap is functioning.	(7) None.
(8) Start fan(s).	(8) Prove fans are operating.
(9) Open main safety shutoff valve and recirculation valve to circulate heated oil through main fuel bypass control valve and the burner header.	(9) Prove all interlocks are satisfied.
(10) Open main damper(s) to purge position.	(10) Prove purge airflow rate. *[See B.3.1(1) and B.3.1(2).]*
(11) Open all burner registers to purge position.	(11) None.
(12) Start purge timer and purge.	(12) None.
(13) Open atomizing medium individual burner shutoff valve to the burner gun to be lighted. Blow free of condensate. Confirm atomizing pressure has been established.	(13) Prove atomizing medium is available.
(14) Immediately proceed with light-off cycle after completion of purge.	(14) Repurge if airflow rate drops below purge rate prior to initiation of light-off cycle.

Note: See Figure B.1.1(c) through Figure B.1.1(e).
*Actions are not necessarily performed in the order shown.

Table B.3.4.2 Operator Actions, Light-Off Cycle — First Igniter

Operator Actions	Interlock Functions
(1) Maintain purge airflow rate.	(1) Prove that airflow has not dropped below purge rate.
(2) Adjust register of burner to be lighted to light-off position, if necessary.	(2) Prove purge airflow rate.
(3) Energize igniter for first burner. For direct electric ignition, omit step (4) and proceed directly to step (3) in Table B.3.4.4.	(3) For fuel-fired igniters, prove flame within 10 seconds. If flame not proved, safety shutoff valves for this igniter should close and spark should be de-energized.
(4) If ignition flame is not established, determine cause and make necessary corrections. Burner register should be opened to purge position for at 1 least minute before repeating light-off cycle.	(4) None.

Note: See Figure B.1.1(c) through Figure B.1.1(e).

Copyright 2014 National Fire Protection Association (NFPA). Licensed, by agreement, for individual use and download on October 4, 2014 to LEADER and READER for designated user PATTARAPORN SRITRAKOOL. No other reproduction or transmission in any form permitted without written permission of NFPA. For inquires or to report unauthorized use, contact licensing@nfpa.org.

Table B.3.4.3 Operator Actions, Light-Off Cycle — Subsequent Igniters

Operator Actions	Interlock Functions
(1) Adjust register of burner to be lighted to light-off position, if necessary.	(1) Prove that airflow has not dropped below purge rate.
(2) Energize igniter. For direct electric igniters, omit step (3) in Table B.3.4.2 and proceed directly to step (3) in Table B.3.4.4.	(2) For fuel-fired igniters, prove flame within 10 seconds. If flame is not proven, safety shutoff valves for this igniter should close and spark should be de-energized.
(3) If ignition flame is not established, determine cause and make necessary corrections. Burner register should be opened to purge position for at least 1 minute before repeating light-off cycle.	(3) None.

Note: See Figure B.1.1(c) through Figure B.1.1(e).

Table B.3.4.4 Operator Actions, Light-Off Cycle — First Main Burner

Operator Actions	Interlock Functions
(1) Adjust register of burner to be lighted to light-off position, if necessary.	(1) Prove airflow has not dropped below purge rate.
(2) If igniter is fuel fired, verify igniter flame is present.	(2) Proved.
(3) Confirm burner oil pressure is being controlled by main fuel bypass control valve and is at light-off pressure. If necessary, throttle recirculating valve as needed to maintain light-off oil pressure.	(3) None.
(4) Open individual burner safety shutoff valve at burner being lighted.	(4) Igniter flame proved on burner being lighted and individual burner supervisory shutoff valve proved closed.
(5) Verify atomizing medium flowing from burner gun about to be lighted.	(5) None.
(6) Confirm clearing valve closed.	(6) None.
(7) Slowly open individual burner supervisory shutoff valve until fully open to establish this main burner flame.	(7) Starts main burner trial for ignition. If main burner flame is not proved within 15 seconds after the valve leaves the closed position, a master fuel trip is effected.
(8) If first main burner flame is not established, determine cause and correct conditions. Repeat actions beginning with prefiring cycle. *(See B.3.4.1.)*	(8) Requires repeat of purge cycle.
(9) After main burner flame is established, adjust burner register to firing position, as necessary.	(9) None.
(10) Close recirculating valve.	(10) None.
(11) Unless classified as Class 1 or Class 2, igniter should be removed from service; visually confirm main flame stability.	(11) None.

Note: See Figure B.1.1(c) through Figure B.1.1(e).

Copyright 2014 National Fire Protection Association (NFPA). Licensed, by agreement, for individual use and download on October 4, 2014 to LEADER and READER for designated user PATTARAPORN SRITRAKOOL. No other reproduction or transmission in any form permitted without written permission of NFPA. For inquires or to report unauthorized use, contact licensing@nfpa.org.

Table B.3.4.5 Operator Actions, Light-Off of Subsequent Main Burners at Light-Off Fuel Pressure

Operator Actions	Interlock Functions
(1) Adjust register of burner to be lighted to light-off position, if necessary.	(1) Prove that airflow has not dropped below purge rate.
(2) If igniter is fuel fired, verify igniter flame is present.	(2) Proved.
(3) Confirm burner fuel pressure is being controlled by the main fuel bypass control valve and is at light-off pressure.	(3) None.
(4) Open individual burner safety shutoff valve at burner being lighted.	(4) Igniter flame proved on burner being lighted and individual burner supervisory shutoff valve proved closed.
(5) Verify atomizing medium flowing from burner gun about to be lighted.	(5) None.
(6) Confirm clearing valve closed.	(6) None.
(7) Slowly open individual burner supervisory shutoff valve until fully open to establish this main burner flame.	(7) If the main burner flame is not proved within 15 seconds after the valve leaves its closed position, all fuel to this burner and its igniter is shut off.
(8) If the main burner flame is not established, determine cause and correct conditions. Open burner register to firing position; wait 1 minute before attempting to light this or any other burner. Repeat B.3.4.3 and B.3.4.5.	(8) None.
(9) After main burner flame is established, adjust burner register to firing position, as necessary.	(9) None.
(10) Unless classified as Class 1 or Class 2, igniter should be removed from service; visually confirm main flame stability.	(10) None.

Note: See Figure B.1.1(c) through Figure B.1.1(e).

B.3.4.9 Operator Actions Following an Emergency Shutdown. See Figure B.1.1(c) through Figure B.1.1(e).

B.3.4.9.1 All individual burner supervisory shutoff valves should be closed. Burner register positions should remain unchanged.

B.3.4.9.2 Atomizing steam flow to all burners should be shut off.

B.3.4.9.3 Oil guns should be removed and drained external to the furnace.

B.3.4.9.4 The unit should be purged in accordance with the following procedure:

(1) Fans that are operating after the master fuel trip should be continued in service.
(2) Airflow should not be immediately increased by deliberate manual or automatic control action.
(3) If the airflow is above purge rate, it should be gradually decreased to this value and the unit should be purged.
(4) If the airflow is below purge rate at the time of the trip, it should be continued at the existing rate for 5 minutes and then increased gradually to purge rate and held at this value for a unit purge.

B.3.4.9.5 Where the master fuel trip is caused by loss of draft fans, or draft fans also have tripped, all dampers in the air and flue gas passages of the unit should be opened slowly to the fully open position to create as much natural draft as possible to ventilate the unit. Opening fan dampers should be timed or controlled to avoid excessive positive or negative furnace pressure transients during fan coastdown. This condition should be maintained for not less than 15 minutes. At the end of this period, the flow control dampers should be closed and the fan(s) should be immediately started. Airflow should be increased gradually to at least purge rate.

B.3.4.9.6 The cause of emergency shutdown should be determined and corrected.

B.3.4.9.7 The first igniter light-off cycle should be performed if restart of unit is desired. *(See B.3.4.2.)*

B.3.4.9.8 If it is desired to remove the boiler from service for a period of time, the fans should be shut down on completion of unit purge and manual shutoff valves should be closed.

B.3.5 Air Heaters. Where provided, regenerative air heaters and gas recirculation fans should be operated during all operations of the unit in a manner recommended by the boiler manufacturer.

Copyright 2014 National Fire Protection Association (NFPA). Licensed, by agreement, for individual use and download on October 4, 2014 to LEADER and READER for designated user PATTARAPORN SRITRAKOOL. No other reproduction or transmission in any form permitted without written permission of NFPA. For inquires or to report unauthorized use, contact licensing@nfpa.org.

Table B.3.4.6 Operator Actions, Light-Off Cycle for Additional Burners When Fuel Pressure of Operating Burners Is Above Light-Off Pressure

Operator Actions	Interlock Functions
(1) Place combustion control system on manual; note windbox-to-furnace pressure differential.	(1) None.
(2) Slowly adjust register on burner to be lighted to light-off position while manually adjusting airflow to maintain windbox-to-furnace differential pressure at the value noted in step (1).	(2) None.
(3) Energize igniter; for direct electric igniters, omit step (4).	(3) Prove flame within 10 seconds. If flame not proved, safety shutoff valves for this igniter should close and spark should be de-energized.
(4) If igniter flame is not established, determine cause and correct.	(4) None.
(5) Open safety shutoff valve to burner being lighted.	(5) Igniter flame proven and supervisory shutoff valve proven closed.
(6) Verify atomizing medium flowing from burner gun about to be lighted.	(6) None.
(7) Confirm clearing valve closed.	(7) None.
(8) Slowly open individual supervisory shutoff valve only enough to light burner.	(8) If the main burner flame is not proved within 15 seconds after the valve leaves its closed position, all fuel to this burner and its igniter should be shut off.
(9) If the main burner flame is not established, determine cause, correct, wait at least 1 minute, then repeat steps (5) through (10).	(9) None.
(10) With main flame established, open air register to the firing position.	(10) None.
(11) Slowly open supervisory shutoff valve completely but without suddenly dropping header fuel pressure.	(11) None.
(12) Unless classified as Class 1 or Class 2, igniter should be removed from service; visually confirm main flame stability.	(12) None.
(13) Adjust airflow to restore correct fuel-air ratio.	(13) None.
(14) Place combustion control system in automatic, if desired.	(14) None.

Note: See Figure B.1.1(c) through Figure B.1.1(e).

Copyright 2014 National Fire Protection Association (NFPA). Licensed, by agreement, for individual use and download on October 4, 2014 to LEADER and READER for designated user PATTARAPORN SRITRAKOOL. No other reproduction or transmission in any form permitted without written permission of NFPA. For inquires or to report unauthorized use, contact licensing@nfpa.org.

Table B.3.4.7 Operator Actions, Normal Shutdown Cycle

Operator Actions	Interlock Functions
(1) Reduce boiler load until main fuel control valve is closed. Main fuel bypass control valve will assume control at light-off oil pressure. Airflow should not be reduced below purge rate.	(1) None.
(2) Each burner should be shut down in the following sequence if the oil gun is to be cleared into the furnace.	(2) None.
(a) Establish igniter on the burner to be shut down.	(a) None.
(b) Close individual burner supervisory shutoff valve.	(b) As each burner supervisory shutoff valve is closed, loss of flame will cause its associated safety shutoff valve to close. After last burner supervisory shutoff valve is closed, loss of all flame should cause main safety shutoff valve to close.
(c) Open clearing valve to clear the burner.	(c) None.
(d) Shut off igniter.	(d) Igniter safety shutoff valves close, igniter atmospheric vent valve opens (for gas igniters).
(e) Leave burner register at firing position.	(e) None.
(f) Shut off atomizing medium to each burner.	(f) None.
(g) All burner guns should be removed.	(g) None.
(3) If oil guns are not cleared into the furnace, eliminate steps (2)(a), (2)(c), and (2)(d). Remove oil guns and drain oil outside the furnace.	(3) None.
(4) A unit purge should be performed.	(4) None.
(5) Fan(s) should be shut down, if desired.	(5) Loss of airflow interlock is actuated.

Note: See Figure B.1.1(c) through Figure B.1.1(e).

Annex C Multiple Burner Boiler Fundamental Principles of a Manual System

This annex is not a part of the requirements of this NFPA document but is included for informational purposes only.

C.1 Boiler Front Controls — Gas Firing.

C.1.1 Manual System. The manual system is not recommended; however, it is recognized that, in some boiler applications and unusual process requirements, there could be a greater safety hazard from boiler tripping. Under these conditions, the system described in Section C.1 should be approved by the authority having local jurisdiction and should be considered as a minimum standard. The system requirements listed in Annex B also should apply.

A manual system is one in which a trained operator has primary responsibility for the proper start-up, operation, and shutdown of a boiler in accordance with the specific operating instructions for each boiler. A key feature of this system is the provision for gas safety shutoff valve assemblies in the main piping and igniter fuel piping supplying the boiler. The system includes interlocks to actuate these assemblies in order to accomplish an emergency shutdown.

C.1.2 Fundamental Principles. The operator should follow written instructions for each specific boiler. These instructions should include the following procedure:

(1) Airflow is adjusted to purge rate, and unit purge is performed.
(2) Purge airflow rate is maintained continuously from purge initiation through the light-off cycle. If airflow is not maintained at purge rate, the prefiring cycle should be repeated.
(3) If the first igniter is not lighted within 5 minutes after the igniter safety shutoff valves have been opened, all fuel valves should be closed and the prefiring cycle should be repeated.
(4) If flame on the first igniter is not established after the igniter supervisory shutoff valve has been opened, all fuel valves should be closed and the prefiring cycle should be repeated.
(5) The operator should observe the igniter flame continuously while opening the first burner supervisory shutoff valve. If main flame is not established or is lost during this operation, all fuel valves should be closed immediately and the prefiring cycle should be repeated.
(6) After each stable main burner flame is established, the igniter should be shut off unless classified as Class 1 or Class 2. The stability of the main burner flame should be verified.
(7) Burners should not be lighted from a previously lighted burner.
(8) The operator should observe main flame stability while making any register or burner damper adjustments. (This is more critical in two-burner boilers.)
(9) After each successive burner light-off, the flame stability of all operating burners should be verified.
(10) If a second or succeeding burner igniter does not light immediately after its igniter supervisory shutoff valve has been opened, the igniter supervisory shutoff valve(s) should be closed and cause for failure to light determined and corrected. At least 1 minute should elapse before the next light-off is attempted.
(11) If a second or succeeding burner flame is not established, the burner and igniter supervisory shutoff valves

Copyright 2014 National Fire Protection Association (NFPA). Licensed, by agreement, for individual use and download on October 4, 2014 to LEADER and READER for designated user PATTARAPORN SRITRAKOOL. No other reproduction or transmission in any form permitted without written permission of NFPA. For inquires or to report unauthorized use, contact licensing@nfpa.org.

should be closed immediately, the burner register or damper should be opened to firing position, and cause for failure to ignite should be determined and corrected. At least 1 minute should elapse before attempting to light this or any igniter.

(12) Operation at less than 25 percent of load is permitted, provided burners maintain stable flame and airflow is maintained at or above purge rate, regardless of the actual load.

(13) Low water level in the steam drum should be monitored and alarmed. Consideration should be given to interlock tripping.

C.1.3 Equipment. The following equipment should be provided:

(1) Equipment to change the firing rate that simultaneously adjusts the fuel and air supplies to a predetermined air-fuel ratio
(2) A purge timer with proven airflow
(3) Provisions for limiting fuel turndown to prevent reducing fuel input below the point of stable burner operation
(4) Permanently installed igniters
(5) Main and igniter gas supply pressure regulation
(6) Flame failure detection and alarm

C.1.4 Interlocks and Emergency Shutdown — Boiler.

C.1.4.1 An emergency shutdown should be initiated by the following conditions:

(1) High fuel gas pressure
(2) Low igniter gas pressure
(3) Low fuel gas supply pressure
(4) Fuel gas pressure in the burner header below the minimum required for flame stability
(5) Loss of all FD fans
(6) Loss of all ID fans, if applicable
(7) Operation of the emergency trip switch by the operator
(8) Loss of control energy if fuel flow to burners is affected in such an event

C.1.4.2 All individual manual burner and igniter supervisory shutoff valves should be in the closed position before the main and igniter safety shutoff valves can be opened.

C.1.5 Operating Cycle.

C.1.5.1 Prefiring Cycle — Gas. The operator should take the steps in Table C.1.5.1 when starting a manual system and satisfy the required interlocks at each step. *[See Figure C.1.5.1(a) and Figure C.1.5.1(b).]* Control system energy, power and water levels, and fuel supply should be established. Prior to start-up, furnace and gas passages should be inspected to determine whether they are in good repair. It should be determined that the unit and its associated systems are evacuated of all personnel and that all access and inspection doors are closed.

C.1.5.2 Light-Off Cycle. The cycle given in Table C.1.5.2 should immediately follow prefiring. Burners are at light-off fuel pressure. The open register purge principle should be followed during the light-off procedure.

C.1.5.3 Normal Shutdown Cycle. The operator should follow the steps listed in Table C.1.5.3 and satisfy the interlocks at each step.

C.1.5.4 Emergency Shutdown. When an emergency shutdown occurs, the main safety shutoff valve and igniter safety shutoff valves should close, and the atmospheric vent valves should open.

Table C.1.5.1 Operator Actions, Prefiring Cycle

Operator Actions*	Interlock Functions
(1) Confirm individual burner and igniter supervisory shutoff valves are closed.	(1) Prove burner and igniter supervisory shutoff valves closed.
(2) Confirm main and igniter safety shutoff valves are closed.	(2) None.
(3) Confirm main fuel control valves are closed.	(3) None.
(4) Open all burner registers to firing position.	(4) None.
(5) Start fans.	(5) None.
(6) Open damper(s) to purge position.	(6) Prove purge airflow rate.
(7) Start purge timer and purge boiler per operating instructions.	(7) None.
(8) Immediately proceed with light-off cycle after completion of purge.	(8) None.

Note: See Figure C.1.5.1(a) and Figure C.1.5.1(b).
*Actions are not necessarily performed in the order shown.

C.1.5.5 Operator Actions Following an Emergency Shutdown.

C.1.5.5.1 All main burner and igniter supervisory valves should be closed. Burner register positions remain unchanged.

C.1.5.5.2 The atomizing steam flow to all burners should be shut off.

C.1.5.5.3 Oil guns external to the furnace should be removed and drained.

C.1.5.5.4 The unit should be purged in accordance with the following procedure.

(1) If the fans are operating after the trip, they should be continued in service. Under no circumstances should the airflow be increased immediately. If the airflow is above purge rate, it can be permitted to be decreased gradually to this value for a unit purge. If the airflow is below purge rate at the time of the trip, it should be continued at the existing rate for 5 minutes and then increased gradually to purge rate and held at this value for a unit purge.
(2) If the trip was caused by loss of draft fans, or if draft fans also have tripped, all dampers in the air and flue gas passages of the unit should be opened slowly to the fully open position to create as much natural draft as possible to ventilate the unit. This condition should be maintained for not less than 15 minutes. At the end of this period, the flow control dampers should be closed and the fan(s) should be started immediately. The airflow should be increased gradually to at least purge rate.

C.1.5.5.5 The cause of the safety shutdown should be determined and corrected.

C.1.5.5.6 The light-off cycle then is performed if relight of boiler is desired.

Copyright 2014 National Fire Protection Association (NFPA). Licensed, by agreement, for individual use and download on October 4, 2014 to LEADER and READER for designated user PATTARAPORN SRITRAKOOL. No other reproduction or transmission in any form permitted without written permission of NFPA. For inquires or to report unauthorized use, contact licensing@nfpa.org.

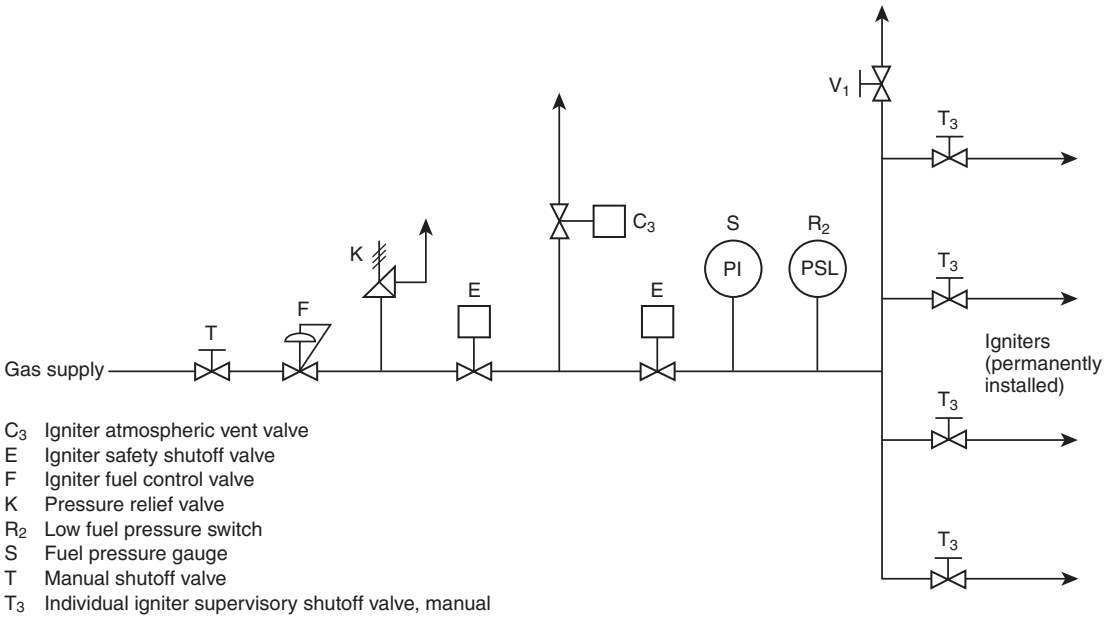

C_3 Igniter atmospheric vent valve
E Igniter safety shutoff valve
F Igniter fuel control valve
K Pressure relief valve
R_2 Low fuel pressure switch
S Fuel pressure gauge
T Manual shutoff valve
T_3 Individual igniter supervisory shutoff valve, manual
V_1 Igniter header atmospheric vent valve, manual

FIGURE C.1.5.1(a) Typical Ignition System — Manual.

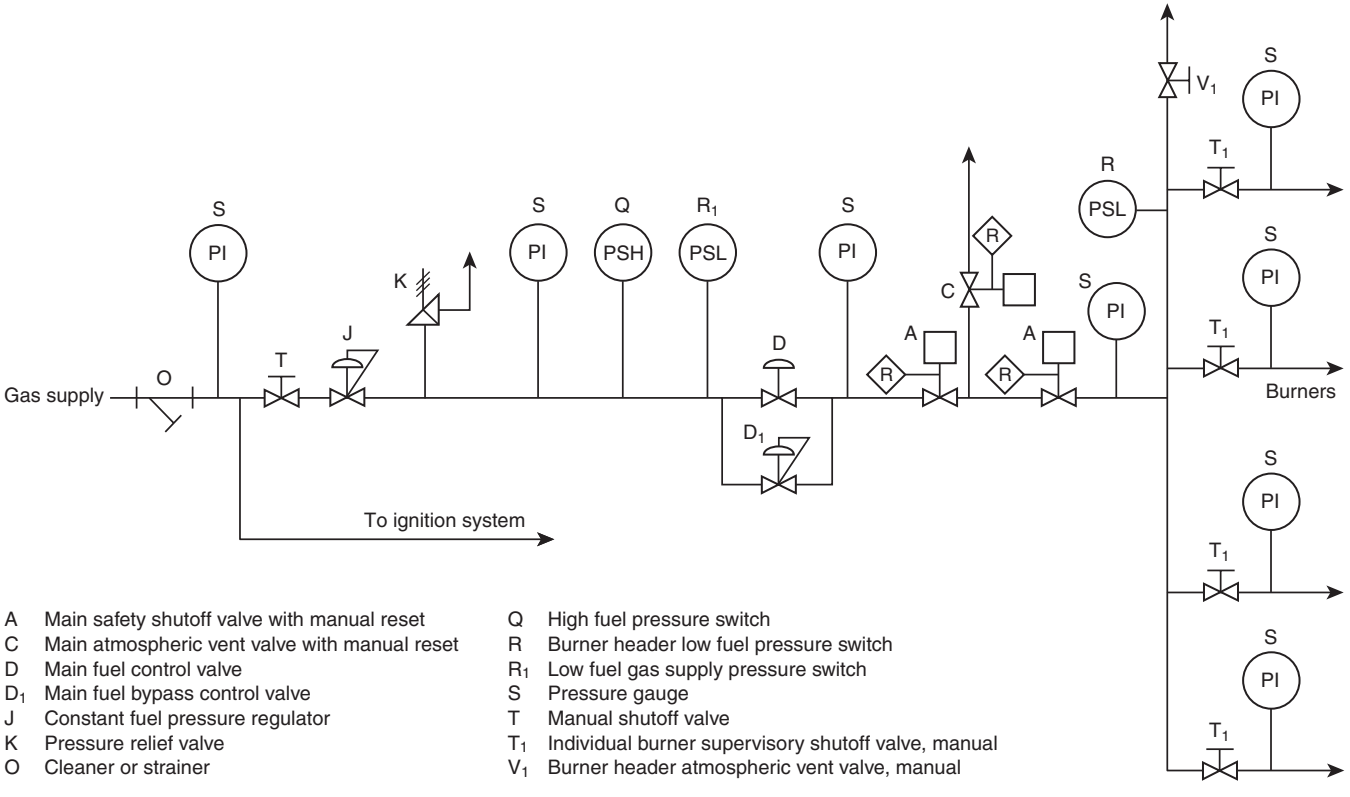

A Main safety shutoff valve with manual reset
C Main atmospheric vent valve with manual reset
D Main fuel control valve
D_1 Main fuel bypass control valve
J Constant fuel pressure regulator
K Pressure relief valve
O Cleaner or strainer
Q High fuel pressure switch
R Burner header low fuel pressure switch
R_1 Low fuel gas supply pressure switch
S Pressure gauge
T Manual shutoff valve
T_1 Individual burner supervisory shutoff valve, manual
V_1 Burner header atmospheric vent valve, manual

FIGURE C.1.5.1(b) Typical Fuel Supply System for Natural Gas-Fired Multiple Burner Boiler — Manual.

Copyright 2014 National Fire Protection Association (NFPA). Licensed, by agreement, for individual use and download on October 4, 2014 to LEADER and READER for designated user PATTARAPORN SRITRAKOOL. No other reproduction or transmission in any form permitted without written permission of NFPA. For inquires or to report unauthorized use, contact licensing@nfpa.org.

Table C.1.5.2 Operator Actions, Light-Off Cycle

Operator Actions	Interlock Functions
(1) Adjust register of burner to be lighted to light-off position, if necessary. Airflow at purge rate.	(1) None.
(2) Confirm burner header atmospheric vent valve is open.	(2) None.
(3) Open igniter safety shutoff valve(s).	(3) Prove all igniter supervisory shutoff valves closed. Prove low igniter header pressure interlocks satisfied.
(4) Open main safety shutoff valves.	(4) Prove all required interlocks satisfied except burner header low pressure trip switch, which is bypassed by a circuit completed only when burner supervisory shutoff valves are closed.
(5) Confirm burner gas pressure is being controlled by the main fuel bypass control valve and is at light-off pressure.	(5) None.
(6) Open individual igniter supervisory shutoff valve and establish flame while under visual observation.	(6) Igniter header low fuel pressure trip switch is in effect when igniter safety shutoff valves are open. *[See step (3).]*
(7) While continuously observing igniter flame, slowly open burner supervisory shutoff valve at burner being lighted until fully open to establish burner flame.	(7) Burner header low fuel pressure trip switch is in effect when main safety shutoff valve(s) are open. *[See step (4).]*
(8) Adjust the burner register to firing position, as necessary.	(8) None.
(9) Slowly close manual burner header atmospheric vent valve while observing main fuel pressure gauge.	(9) None.
(10) Unless classified as Class 1 or Class 2, igniter should be removed from service; visually confirm main flame stability.	(10) None.
(11) Repeat steps (1) and (5) through (9) for additional burners at light-off pressure, as necessary. After each additional burner is lighted, visually reconfirm the stability of all previously lighted burners.	(11) None.
(12) Above 25 percent load, close registers of all burners not placed in operation.	(12) None.
(13) Adjust firing rate of boiler and fuel/air ratio to meet demand.	(13) None.

Note: See Figure C.1.5.1(a) and Figure C.1.5.1(b).

Table C.1.5.3 Operator Actions, Normal Shutdown Cycle

Operator Actions	Interlock Functions
(1) Reduce boiler load until main fuel control valve is closed. Main fuel bypass control valve will assume control at light-off gas pressure. Do not reduce total airflow below purge rate.	(1) None.
(2) Close individual supervisory shutoff valve at each burner and associated igniter valve if in operation. Leave burner register at firing position.	(2) After last burner supervisory shutoff valve is closed, burner header low pressure trip switch is deactivated.
(3) After last burner valve is closed, close main and igniter safety shutoff valves. Main atmospheric valve opens.	(3) None.
(4) Immediately open burner header manual vent valve.	(4) None.
(5) Purge unit.	(5) None.
(6) Shut down fan(s), if necessary.	(6) Combustion air interlocks deactivated.

Note: See Figure C.1.5.1(a) and Figure C.1.5.1(b).

Copyright 2014 National Fire Protection Association (NFPA). Licensed, by agreement, for individual use and download on October 4, 2014 to LEADER and READER for designated user PATTARAPORN SRITRAKOOL. No other reproduction or transmission in any form permitted without written permission of NFPA. For inquires or to report unauthorized use, contact licensing@nfpa.org.

C.1.5.5.7 If it is desired to remove the boiler from service for a period of time, the fans should be shut down on completion of purge, and the manual shutoff valves should be closed.

C.2 Boiler Front Controls — Oil Firing.

C.2.1 Manual System. The manual system is not recommended; however, it is recognized that in some boiler applications and unusual process requirements, there could be a greater safety hazard from boiler tripping. Under these conditions, the system described in this section should be approved by the authority having local jurisdiction and should be considered as a minimum standard. The system requirements listed in Annex B also should apply.

A manual system is one in which a trained operator has primary responsibility for the proper start-up, operation, and shutdown of a boiler in accordance with the specific operating instructions for each boiler. A key feature of this system is the provision for oil safety shutoff valve assemblies in the main piping and igniter fuel piping supplying the boiler. The system includes interlocks to actuate these assemblies in order to accomplish an emergency shutdown.

C.2.2 Fundamental Principles. The operator should follow written instructions for each specific boiler. These instructions should include the following procedure:

(1) Airflow is adjusted to the purge rate, and unit purge performed.
(2) Purge airflow rate is maintained continuously from purge initiation through the light-off cycle. If airflow is not maintained at purge rate, the prefiring cycle should be repeated.
(3) If the first igniter is not lighted within 5 minutes after the igniter safety shutoff valves have been opened, all fuel valves should be closed and the prefiring cycle should be repeated.
(4) If flame on the first igniter is not established after the igniter supervisory shutoff valve has been opened, all fuel valves should be closed and the prefiring cycle should be repeated.
(5) The operator should observe the igniter flame continuously while opening the first burner supervisory shutoff valve. If main flame is not established or is lost during this operation, all fuel valves should be closed immediately and the prefiring cycle should be repeated.
(6) After each stable main burner flame is established, the igniter should be shut off unless classified as Class 1 or Class 2. The stability of the main burner flame should be verified.
(7) Burners should not be lighted from a previously lighted burner.
(8) The operator should observe main flame stability while making any register or burner damper adjustments. (This step is more critical in two-burner boilers.)
(9) After each successive burner light-off, the flame stability of all operating burners should be verified.
(10) If a second or succeeding burner igniter does not light immediately after its igniter supervisory shutoff valve has been opened, the igniter supervisory shutoff valve(s) should be closed and cause for failure to light determined and corrected. At least 1 minute should elapse before the next light-off is attempted.
(11) If a second or succeeding main burner flame is not established, the individual burner supervisory and igniter supervisory shutoff valve(s) should be closed immediately, the burner register or damper should be opened to firing position, and cause for failure to ignite should be determined and corrected. At least 1 minute should elapse before attempting to light this or any igniter.
(12) Operation at less than 25 percent of load is permitted, provided burners maintain stable flame and airflow is maintained at or above purge rate, regardless of the actual load.
(13) Low water level in the steam drum should be monitored and alarmed. Consideration should be given to interlock tripping.

C.2.3 Equipment. The following equipment should be provided:

(1) Equipment to change the firing rate that simultaneously adjusts the fuel and air supplies to a predetermined air-fuel ratio
(2) A purge timer with proven airflow
(3) Provisions for limiting fuel turndown to prevent reducing fuel input below the point of stable burner operation
(4) Permanently installed igniters
(5) Oil pressure regulation
(6) Oil temperature regulation if heating is required
(7) Flame failure detection and alarm

C.2.4 Interlocks and Emergency Shutdown — Boiler.

C.2.4.1 An emergency shutdown should be initiated by the following conditions:

(1) Low pressure in the oil supply to the control valve
(2) Fuel pressure at the burner below the minimum established by the manufacturer or by trial
(3) Loss of all FD fans
(4) Loss of all ID fans, if applicable
(5) Operation of the emergency trip switch by the operator
(6) Loss of control energy if fuel flow to burners is affected in such an event
(7) Atomizing medium (if provided) at the burner below the minimum established by the manufacturer or by trial

C.2.4.2 All individual manual burner and igniter supervisory shutoff valves should be in the closed position before the main and igniter safety shutoff valves can be opened.

C.2.5 Operating Cycle.

C.2.5.1 Prefiring Cycle — Oil (Steam Atomized, Heated Oil). The operator should follow the steps given in Table C.2.5.1 when starting a manual system and satisfy the required interlocks at each step. *[See Figure C.2.5.1(a) through Figure C.2.5.1(c).]* Control system energy, power and water levels, fuel supply, and atomizing medium, if used, should be established. Prior to start-up, furnace and gas passages should be inspected to determine whether they are in good repair. It should be determined that the unit and its associated systems are evacuated by all personnel and that all access and inspection doors are closed.

C.2.5.2 Light-Off Cycle. This cycle immediately follows prefiring. Burners are at light-off fuel pressure. The open register purge principle should be followed during the light-off procedure. The operator is to follow the steps listed in Table C.2.5.2 and satisfy the interlocks at each step.

C.2.5.3 Normal Shutdown Cycle. The operator should follow the steps listed in Table C.2.5.3 and satisfy the interlocks at each step.

C.2.5.4 Emergency Shutdown. When an emergency shutdown occurs, the main safety shutoff valve and igniter safety shutoff valves close, and the atmospheric vent valves open.

Copyright 2014 National Fire Protection Association (NFPA). Licensed, by agreement, for individual use and download on October 4, 2014 to LEADER and READER for designated user PATTARAPORN SRITRAKOOL. No other reproduction or transmission in any form permitted without written permission of NFPA. For inquires or to report unauthorized use, contact licensing@nfpa.org.

Table C.2.5.1 Operator Actions, Prefiring Cycle

Operator Actions*	Interlock Functions
(1) Inspect furnace for unburned oil accumulations.	(1) None.
(2) Confirm burner gun for proper tips or sprayer plates and place gun in proper position.	(2) None.
(3) Confirm individual burner and igniter supervisory shutoff valves are closed.	(3) Prove burner and igniter supervisory shutoff valves closed.
(4) Confirm main and igniter safety shutoff valves are closed.	(4) None.
(5) Confirm main fuel control valve is closed.	(5) None.
(6) Confirm that atomizing steam header has been blown free of condensate and header trap is functioning.	(6) None.
(7) Open all burner registers to firing position.	(7) None.
(8) Start fans.	(8) None.
(9) Open main damper(s) to purge position.	(9) Prove purge airflow rate.
(10) Open main fuel bypass control valve, main safety shutoff valve, and recirculating valve to circulate heated oil through the main fuel bypass control valve and burner header.	(10) Prove all required interlocks satisfied except burner header low fuel pressure switch, which is bypassed by a circuit completed only when all individual burner supervisory valves are closed.
(11) Start purge timer and purge boiler per operating instructions.	(11) None.
(12) Open atomizing medium valve to the burner gun to be lighted. Blow free of condensate. Confirm atomizing pressure has been established.	(12) None.
(13) Immediately proceed with light-off cycle after completion of purge.	(13) None.

Note: See Figure C.2.5.1(a) through Figure C.2.5.1(c).
*Actions are not necessarily performed in the order shown.

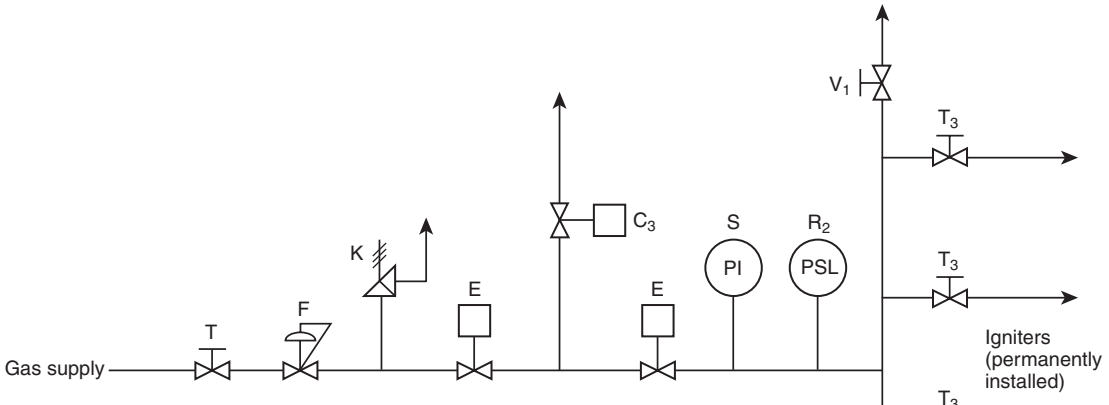

C_3 Igniter atmospheric vent valve
E Igniter safety shutoff valve
F Igniter fuel control valve
K Pressure relief valve
R_2 Low fuel pressure switch
S Fuel pressure gauge
T Manual shutoff valve
T_3 Individual igniter supervisory shutoff valve, manual
V_1 Igniter header atmospheric vent valve, manual

FIGURE C.2.5.1(a) Typical Ignition System — Manual.

Copyright 2014 National Fire Protection Association (NFPA). Licensed, by agreement, for individual use and download on October 4, 2014 to LEADER and READER for designated user PATTARAPORN SRITRAKOOL. No other reproduction or transmission in any form permitted without written permission of NFPA. For inquires or to report unauthorized use, contact licensing@nfpa.org.

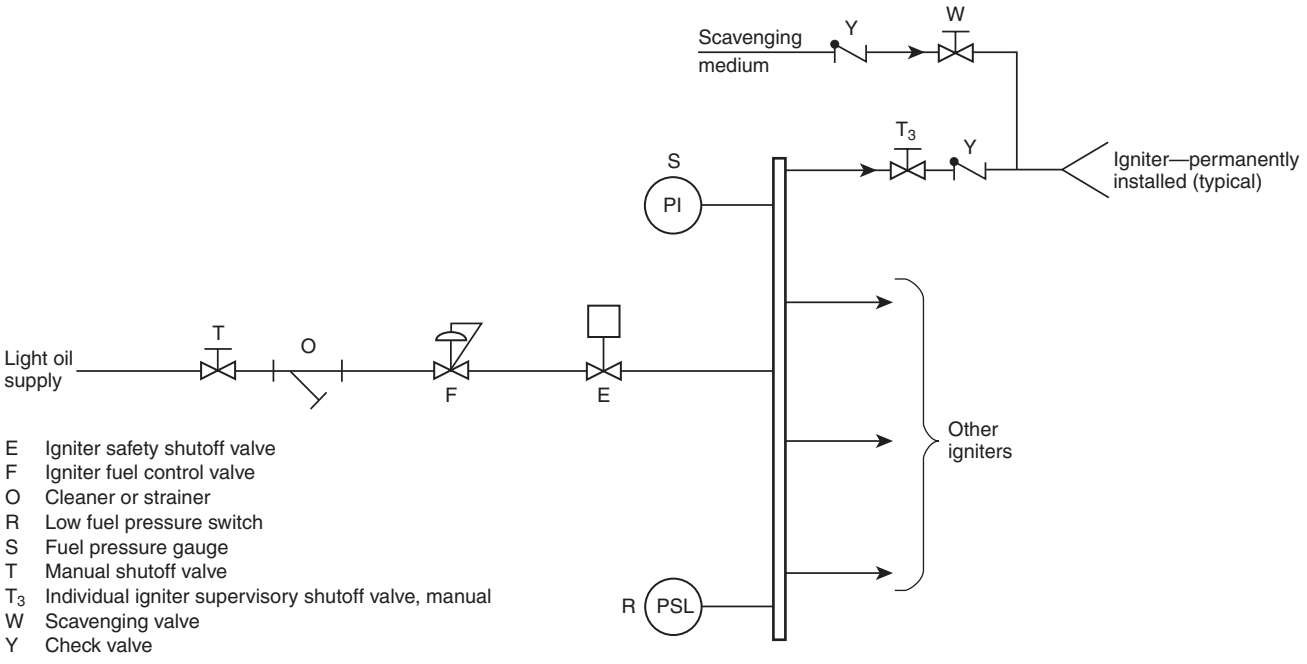

FIGURE C.2.5.1(b) Typical Mechanical Atomizing Light Oil Igniter System — Manual.

C.2.5.5 Operator Actions Following an Emergency Shutdown.

C.2.5.5.1 All main burner and igniter supervisory valves should be closed. Burner register positions remain unchanged.

C.2.5.5.2 The atomizing steam flow to all burners should be shut off.

C.2.5.5.3 Oil guns external to furnace should be removed and drained.

C.2.5.5.4 The unit is purged in accordance with the following procedure:

(1) If the fans are operating after the trip, they should be continued in service. Under no circumstances should the airflow be increased immediately. If the airflow is above purge rate, it should be decreased gradually to this value for a unit purge. If the airflow is below purge rate at the time of the trip, it should be continued at the existing rate for 5 minutes, then increased gradually to purge rate and held at this value for a unit purge.

(2) If the trip was caused by loss of draft fans, or draft fans also have tripped, all dampers in the air and flue gas passages of the unit should be opened slowly to the fully open position to create as much natural draft as possible to ventilate the unit. This condition should be maintained for not less than 15 minutes. At the end of this period, the flow control dampers should be closed and the fan(s) should be started immediately. The airflow should be increased gradually to at least purge rate.

C.2.5.5.5 The cause of safety shutdown should be determined and corrected.

C.2.5.5.6 The light-off cycle then is performed if relight of boiler is desired.

C.2.5.5.7 If it is desired to remove the boiler from service for a period of time, the fans should be shut down on completion of purge, and the manual shutoff valves should be closed.

Copyright 2014 National Fire Protection Association (NFPA). Licensed, by agreement, for individual use and download on October 4, 2014 to LEADER and READER for designated user PATTARAPORN SRITRAKOOL. No other reproduction or transmission in any form permitted without written permission of NFPA. For inquires or to report unauthorized use, contact licensing@nfpa.org.

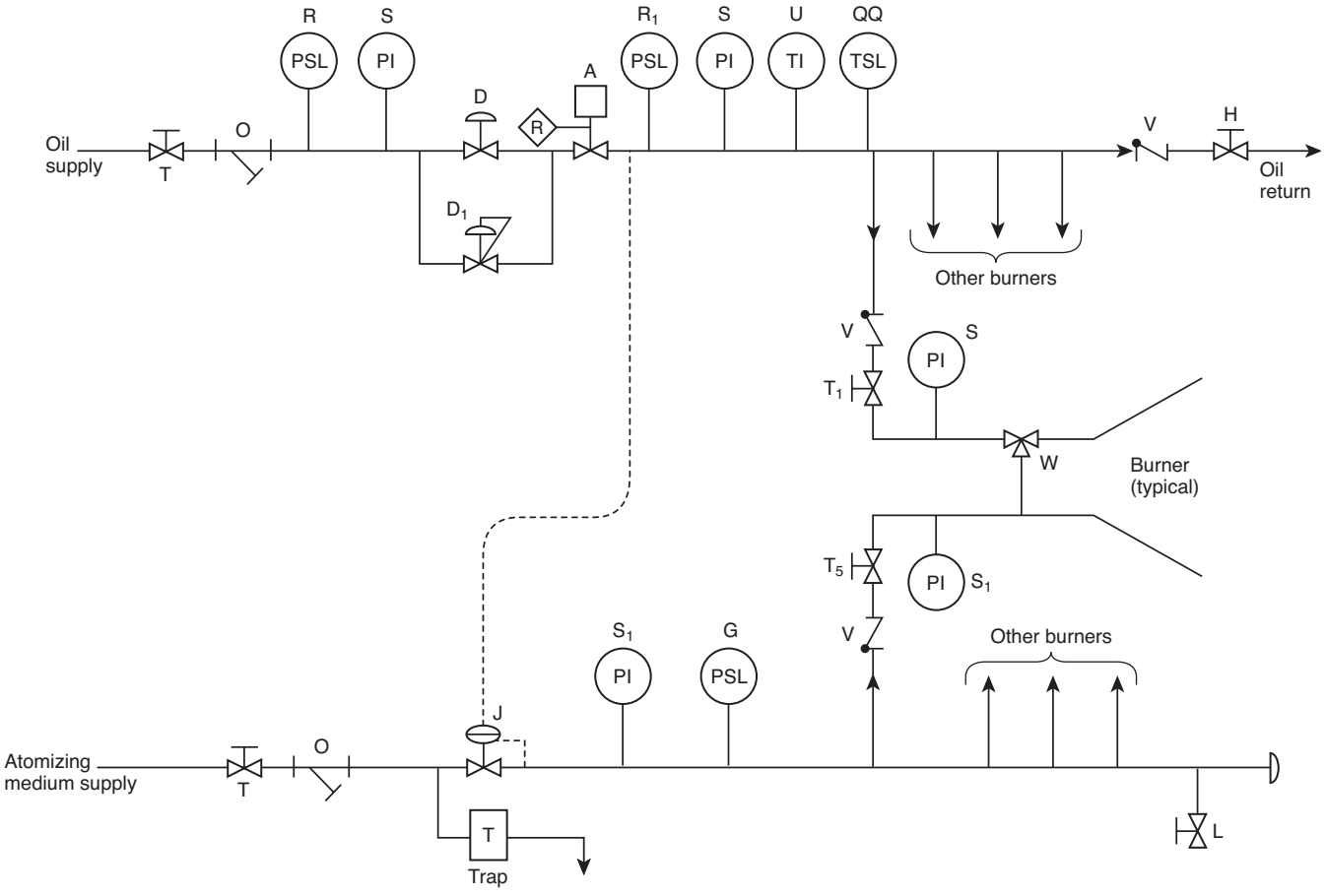

A Main safety shutoff valve with manual reset
D Main fuel control valve
D_1 Main fuel bypass control valve
G Atomizing medium low pressure switch
H Recirculating valve
J Atomizing pressure regulator
L Bleed valve
O Strainer
QQ Low-temperature or high-viscosity alarm switch
R Low fuel pressure switch
R_1 Burner header low fuel pressure switch
S Fuel pressure gauge
S_1 Atomizing medium pressure gauge
T Manual shutoff valve
T_1 Individual burner supervisory shutoff valve, manual
T_5 Atomizing medium individual burner shutoff valve, manual
U Thermometer
V Check valve
W Scavenging valve

FIGURE C.2.5.1(c) Typical Steam Atomizing Main Oil Burner System — Manual.

Copyright 2014 National Fire Protection Association (NFPA). Licensed, by agreement, for individual use and download on October 4, 2014 to LEADER and READER for designated user PATTARAPORN SRITRAKOOL. No other reproduction or transmission in any form permitted without written permission of NFPA. For inquires or to report unauthorized use, contact licensing@nfpa.org.

Table C.2.5.2 Operator Actions, Light-Off Cycle

Operator Actions	Interlock Functions
(1) Adjust register of burner to be lighted to light-off position, if necessary. Airflow at purge rate.	(1) None.
(2) Confirm that burner oil pressure is being controlled by the main fuel bypass control valve and is at light-off pressure. If necessary, throttle oil recirculating valve, as needed, to maintain necessary light-off pressure.	(2) None.
(3) Open igniter header safety shutoff valve(s).	(3) Prove all igniter supervisory shutoff valves closed. Prove low igniter header pressure interlocks satisfied.
(4) Verify atomizing medium flowing from burner gun about to be lighted.	(4) None.
(5) Confirm clearing valve closed.	(5) None.
(6) Open individual igniter supervisory shutoff valve, and establish flame while under visual observation.	(6) Igniter header low fuel pressure trip switch is in effect when igniter safety shutoff valves are open. *[See (3) in this column.]*
(7) While continuously observing igniter flame, slowly open burner supervisory shutoff valve at burner being lighted until fully open to establish burner flame.	(7) Burner header low fuel pressure trip switch is in effect when main safety shutoff valve(s) are open.
(8) Adjust the burner register to firing position, as necessary.	(8) None.
(9) Unless classified as Class 1 or Class 2, igniter should be removed from service; visually confirm main flame stability.	(9) None.
(10) Repeat steps (1) and (5) through (9) for additional burners at light-off pressure, as necessary. After each additional burner is lighted, visually reconfirm the stability of all previously lighted burners.	(10) None.
(11) Above 25 percent load, close registers of all burners not placed in operation.	(11) None.
(12) Adjust firing rate of boiler and fuel-air ratio to meet demand.	(12) None.
(13) Close recirculating valve.	(13) None.

Note: See Figure C.2.5.1(a) through Figure C.2.5.1(c).

Copyright 2014 National Fire Protection Association (NFPA). Licensed, by agreement, for individual use and download on October 4, 2014 to LEADER and READER for designated user PATTARAPORN SRITRAKOOL. No other reproduction or transmission in any form permitted without written permission of NFPA. For inquires or to report unauthorized use, contact licensing@nfpa.org.

Table C.2.5.3 Operator Actions, Normal Shutdown Cycle

Operator Actions	Interlock Functions
(1) Reduce boiler load until main fuel control valve is closed. Main fuel bypass control valve will assume control at light-off oil pressure. Do not reduce total airflow below purge rate.	(1) None.
(2) Each oil burner should be shut down in the following sequence if oil gun should be cleared into the furnace.	(2) None.
(a) If igniter has been turned off previously, establish igniter flame on the burner to be shut down.	(a) None.
(b) Close individual burner supervisory shutoff valve.	(b) None.
(c) Open clearing valve. The clearing valve should be left open long enough to clear the burner gun thoroughly.	(c) None.
(d) Shut off igniter.	(d) None.
(e) Leave burner register open.	(e) None.
(f) Shut off atomizing medium and remove gun. Note: If oil gun is not cleared into furnace omit steps (2)(a), (2)(c), and (2)(d).	(f) After last burner supervisory shutoff valve closed, burner header low fuel pressure interlock is deactivated.
(3) After the last individual burner supervisory shutoff valve is closed, close main and igniter safety shutoff valves. Igniter atmospheric vent valve opens.	(3) None.
(4) Purge unit.	(4) None.
(5) Shut down fan(s), if necessary.	(5) Combustion air interlocks deactivated.

Note: See Figure C.2.5.1(a) through Figure C.2.5.1(c).

Annex D Multiple Burner Boiler Low NO_x Operation — Special Considerations

This annex is not a part of the requirements of this NFPA document but is included for informational purposes only.

D.1 General Considerations.

D.1.1 Regulations limiting NO_x emissions for both existing and new installations have resulted from the adoption of the Clean Air Act Amendment of 1990. Responses to the regulations have included both technologies and operating techniques that affect the quality of combustion and could have an adverse effect on flame stability. Methods to reduce NO_x, which can affect flame stability, are designed to control fuel and air mixing, distribute heat release over more area, and produce lower flame temperature and longer, less turbulent flames. It is important that the designer recognize these potential hazards and perform tests as specified in 6.6.3.2.2, 6.7.3.2.2, and 6.8.3.2.2 to determine the limits of flame stability under these new operating conditions.

D.1.2 Methods to reduce NO_x could reduce the margins formerly available to prevent or minimize accumulations of unburned fuel in the furnace during combustion upsets. For all methods of NO_x reduction, special considerations are necessary to ensure the stability of the flame envelope. In general, the combustion control system is intended to provide tighter control of fuel and airflows; the windbox design should be reviewed carefully to ensure proper distribution of flows to the burners; the type of flame detector, its location, and its sighting should be assessed and retested; and distribution, mixing, and injection of recirculated gas into the process should be analyzed carefully. All the methods described tend to increase the possibility of unburned combustibles throughout the unit and ducts. Therefore, the use of flue gas combustibles analyzers is recommended. A number of risks could arise, among them the following:

(1) In-furnace NO_x control technologies could reduce the margins formerly available to prevent or minimize accumulations of unburned fuel in the furnace during combustion upsets.
(2) In-furnace NO_x control technologies could increase the propensity for furnace wall tube corrosion due to very low excess air or even fuel-rich flue gas conditions.
(3) In-furnace NO_x control technologies could result in burner flames that are more difficult to scan and that operate closer to an unstable regime across the load range.
(4) In-furnace NO_x control technologies that utilize staged fuel injection could result in combustion conditions that are not detectable with existing flame detector technology.

D.1.3 Any change in flame characteristics to reduce NO_x emissions could necessitate changing the type of flame detector, or flame detectors might need to be relocated on existing units.

D.2 Technology Overview.

D.2.1 Low NO_x Burners.

D.2.1.1 For burners having a high air side pressure drop [generally greater than 102 mm (4 in.) water column at full boiler load], one way to indicate proper air-fuel ratio is to compare burner airflow with burner fuel flow as determined by windbox-to-furnace differential and burner header pressure. The ratio thus determined, plus the open register procedure, provides a guide for proper operation of burners under start-up conditions where flows might be out of the range of other meters. Windbox-to-furnace differential taps, where provided, should be located at the burner level.

Copyright 2014 National Fire Protection Association (NFPA). Licensed, by agreement, for individual use and download on October 4, 2014 to LEADER and READER for designated user PATTARAPORN SRITRAKOOL. No other reproduction or transmission in any form permitted without written permission of NFPA. For inquires or to report unauthorized use, contact licensing@nfpa.org.

D.2.2 Overfire Air.

D.2.2.1 Overfire Air Supply.

D.2.2.1.1 The overfire air supply system should be sized and arranged to ensure airflow adequate for all operating requirements of the unit. Consideration should be given to the effects of or on the main combustion air system if the overfire air is supplied from any part of the furnace combustion air system. This should include coordination of the main overfire air control damper(s), booster fan (if used), and overfire air port dampers (if used), with the furnace combustion control system. The overfire air supply equipment should be designed with careful consideration of operating environment and ambient conditions. Proper personnel and equipment protection should be utilized when preheated combustion air is used for overfire air.

D.2.2.2 Overfire Air Port Cooling.

D.2.2.2.1 Overfire air port cooling should be permitted when the overfire air system is not in service, provided the cooling flow is sufficient to provide a positive flow during all furnace operation and purge procedures. If positive flow overfire air port cooling is not provided, tight shutoff dampers should be provided on the overfire air ports as near the furnace as possible to prevent furnace gases from entering the out-of-service overfire air system. All leakage or cooling airflows must be accounted for by the combustion control system.

D.2.3 Reburning.

D.2.3.1 When fuel is injected through reburn injectors without air, there might be no visible combustion taking place at the reburn injectors. Consequently, flame detectors might not provide a useful input to a burner management system in reburn applications. A very rapid chemical reaction does take place, however, due to the elevated temperatures and rapid mixing of the reburn fuel with the products of combustion from the main burner zone, whereby any oxygen in the flue gas from the main burner zone is almost immediately consumed.

D.2.4 Flue Gas Recirculation.

D.2.4.1 Where flue gas recirculation is used, special methods and devices are to be provided to ensure adequate mixing and uniform distribution of recirculated gas and air to the windboxes. Where flue gas recirculation is introduced into the total secondary air to the windboxes, means are to be provided to monitor either the ratio of flue gas to air or the oxygen content of the mixture. Where flue gas recirculation is introduced so that only air, not the mixture, is introduced at the fuel nozzles, adequate means are to be provided to ensure the prescribed distribution of air and the recirculating flue gas–air mixture.

Annex E Industry Experience (Reserved)

Annex F Solid Fuel Firing in Stokers

This annex is not a part of the requirements of this NFPA document but is included for informational purposes only.

F.1 Coals.

F.1.1 General. Depending on the method of stoker firing, all ASTM classifications of coals can be burned. These include Class I, Anthracite; Class II, Bituminous; Class III, Sub-Bituminous; and Class IV, Lignite. In choosing an appropriate stoker type, there are several properties of coal that must be considered. These are, in part, the relationship between fixed carbon and volatile matter, the moisture content, the percent ash, the ash fusion temperature, and the free swelling index.

F.1.2 Classification.

F.1.2.1 Class I, Anthracite Coal, is divided into the following three groups:

(1) Group 1, Meta-Anthracite, in which the fixed carbon on a dry and mineral-matter-free basis is equal to or greater than 98 percent
(2) Group 2, Anthracite, which has a range of fixed carbon limits on a dry and mineral-matter-free basis of greater than 92 percent and less than 98.2 percent
(3) Group 3, Semi-Anthracite, which has a fixed carbon limit on a dry and mineral-matter-free basis equal to or greater than 86 percent and less than 92.8 percent

F.1.2.2 Class II, Bituminous Coal, is subdivided into the following five groups:

(1) Group 1, Low Volatile Bituminous Coal, has fixed carbon limits greater than 78 percent but less than 86 percent.
(2) Group 2, Medium Volatile Bituminous Coal, has fixed carbon limits greater than 69 percent but less than 78 percent.
(3) Group 3, High Volatile "A" Bituminous Coal, has a fixed carbon quantity of less than 69 percent and greater than 32.564 MJ/kg (14.0 kBtu/lb) calorific value on a moist mineral-matter-free basis.
(4) Group 4, High Volatile "B" Bituminous Coal, has a calorific value equal to or greater than 30.238 MJ/kg (13.0 kBtu/lb) and less than 32.564 MJ/kg (14.0 kBtu/lb).
(5) Group 5, High Volatile "C" Bituminous Coal, has a calorific value equal to or greater than 26.749 MJ/kg (11.5 kBtu/lb) and less than 30.238 MJ/kg (13.0 kBtu/lb) when it is commonly agglomerating and a calorific value limit equal to or greater than 24.423 MJ/kg (10.5 kBtu/lb) but less than 26.749 MJ/kg (11.5 kBtu/lb) when it is always agglomerating.

F.1.2.2.1 All the bituminous coals in groups (1) through (4) are considered commonly agglomerating.

F.1.2.3 Class III, Sub-Bituminous Coal, is divided into the following three groups:

(1) Group 1, Sub-Bituminous "A" Coal, has a calorific value equal to or greater than 24.423 MJ/kg (10.5 kBtu/lb) but less than 26.749 MJ/kg (11.5 kBtu/lb).
(2) Group 2, Sub-Bituminous "B" Coal, has a calorific value limit equal to or greater than 22.097 MJ/kg (9.5 kBtu/lb) but less than 24.423 MJ/kg (10.5 kBtu/lb).
(3) Group 3, Sub-Bituminous "C" Coal, has a calorific value equal to or greater than 19.3 MJ/kg (8.3 kBtu/lb) but less than 22.097 MJ/kg (9.5 kBtu/lb).

F.1.2.3.1 All three groups of the sub-bituminous coals are considered nonagglomerating.

F.1.2.4 Class IV, Lignite Coal, is divided into two groups:

(1) Group 1, Lignite A Coal, has a calorific value limit equal to or greater than 14.654 MJ/kg (6.3 kBtu/lb) and less than 19.3 MJ/kg (8.3 kBtu/lb).
(2) Group 2, Lignite B Coal, has a calorific value less than 14.654 MJ/kg (6.3 kBtu/lb).

Copyright 2014 National Fire Protection Association (NFPA). Licensed, by agreement, for individual use and download on October 4, 2014 to LEADER and READER for designated user PATTARAPORN SRITRAKOOL. No other reproduction or transmission in any form permitted without written permission of NFPA. For inquires or to report unauthorized use, contact licensing@nfpa.org.

F.1.2.4.1 Both groups of lignite coals are considered nonagglomerating.

F.1.3 Sizing. Sizing characteristics vary with stoker type as outlined in ABMA 203, *A Guide to Clean and Efficient Operation of Coal-Stoker-Fired Boilers*. Different coals have varying tendencies to break down during mining processes and in handling. Western sub-bituminous coals are considered friable and are generally delivered to the boiler with high percentages of particles less than 6.35 mm (¼ in.) in size. With the correct equipment, these coals can be burned satisfactorily.

For the best overall operation, each plant should carefully analyze the fuel characteristics and associated handling and combustion problems. Anthracite is usually burned in finer sizes, generally less than 7.94 mm (5⁄16 in.), to expose more surface of the very high fixed carbon fuel to the oxygen in the air.

Sizing in the hopper should be within the two limits as set forth in ABMA 203. Means should be provided for the delivery of coal to the stoker hopper without size segregation.

F.2 Peat. Peat is a high moisture fuel characterized by high volatile matter, typically 50 percent to 70 percent on a dry, ash-free basis. The harvesting of peat bogs includes air drying to a moisture less than 50 percent, which allows it to be burned on stokers with preheated air.

F.3 Wood. Wood is a fuel derived either from the forest products industries, such as lumbering or pulp and paper mills, or from the direct harvesting of trees to be used as fuel. Wood is characterized by a high percentage of volatile matter, from 75 percent to an excess of 80 percent on a dry and ash-free basis. Wood releases its energy at a more rapid rate than coal.

Two characteristics of wood fuel vary greatly, depending on the source of the fuel. One is the size consist and the other is moisture content. Size consist can vary from sander dust to coarse chips or bark, the size of which depends on sizing preparation equipment and, in the case of bark, its tendency to remain in a long, stringy, fibrous form. Wood moisture can vary from less than 10 percent to an excess of 60 percent. Wood chips, hogged fuel, or green lumber mill waste normally have moisture contents varying from 40 percent to 55 percent.

The source of wood fired on stokers can vary considerably. It is necessary for efficient and safe operation that the fuel be completely mixed without wide variations in sizing or moisture content. These variations can cause rapid and severe furnace pulsations, resulting in a dangerous condition as well as inefficient operation. Normally, wood having a moisture content up to 55 percent can be burned stably without auxiliary fuel as long as proper attention has been given to furnace design, preheated air temperature, stoker heat releases, and proper fuel handling and metering. The vast majority of wood is burned on overfeed spreader stokers.

F.4 Municipal Waste. Municipal waste is burned with stokers in two forms. The first is known as municipal solid waste (MSW), which is delivered without preparation. It is normally burned as a deep fuel bed on an overfeed mass burning-type stoker specially constructed for this service. The other form of municipal waste is known as refuse-derived fuel (RDF), in which the MSW is shredded and classified for size and to remove tramp material such as metals and glass. It is normally burned on an overfeed spreader stoker.

Municipal waste has a high volatile matter–to–fixed carbon ratio. Normally, it readily releases its energy. The effects of large sizing in the case of MSW and RDF can lead to improper burning. With the potential for high moisture content, the use of preheated air is generally advocated.

In the case of an MSW-fired unit, furnace explosions can result from aerosol cans, propane bottles, and so forth, contained in the fuel supply. Pulsations from concentrations of extremely volatile wastes may also result.

F.5 Other Waste. Other waste can include a multiplicity of discarded solids that could be considered stoker fuel. Wood waste that has been impregnated with resins or additives for adhesions or other purposes falls into the category of other wastes. These additives, along with a consideration for size consist, could greatly reduce the flash point of the wood waste and increase concern for attention to stable furnace conditions. Other common waste might include bagasse from sugar cane processing, furfural residue from the production of phenolic resins, coffee grounds from the production of instant coffee, and peanut shells. All of these wastes, with proper attention to sizing, moisture, and continuous metering, can be successfully burned on overfeed spreader stokers. The vast majority of waste fuels are further characterized by a high volatile matter–to–fixed carbon ratio.

F.6 Solid Fuel Firing — Special Characteristics.

F.6.1 Solid Fuels.

F.6.1.1 Solid fuels can be burned in three ways: in suspension, in partial suspension with final burnout on a grate, or in mass on a grate. Different types of grates can be used, depending on what kind of system is applicable. Several types of feeders are available. Feeders are specified according to fuel type and method of burning, for example, suspension, in mass, and so forth.

F.6.1.2 Some solid fuels have a high moisture content. For instance, bark has a moisture content of 35 percent to 50 percent; bagasse, 40 percent to 60 percent; and coffee grounds, 60 percent. As a result, these fuels can be dried before burning, with some of the final drying taking place as the fuel enters the furnace and falls to the grate. Manufacturer's recommendations should be followed.

F.6.1.3 The size consist of solid fuels should be in accordance with the stoker manufacturer's recommendations.

F.6.2 Finely Divided Solid Fuels.

F.6.2.1 Characteristics of finely divided solid fuel approach those of pulverized fuel. Care should be taken in their handling to prevent accumulations that could ignite spontaneously.

F.6.2.2 These fuels should be handled separately from other solid fuels; therefore, special care should be taken to follow safe design and operating procedures. Recommendations of the equipment manufacturer should be followed.

F.6.3 Specific Fuels.

F.6.3.1 Bagasse.

F.6.3.1.1 Bagasse is the portion of sugar cane remaining after sugar is extracted. It consists of cellulose fibers and fine particles.

F.6.3.1.2 Variations in refining and handling can lead to variations in fuel particle size, which can create firing problems. These variations can cause rapid and severe furnace pulsations, resulting in a dangerous condition as well as inefficient operation.

Copyright 2014 National Fire Protection Association (NFPA). Licensed, by agreement, for individual use and download on October 4, 2014 to LEADER and READER for designated user PATTARAPORN SRITRAKOOL. No other reproduction or transmission in any form permitted without written permission of NFPA. For inquires or to report unauthorized use, contact licensing@nfpa.org.

F.6.3.2 Refuse-Derived Fuel.

F.6.3.2.1 Refuse-derived fuel (RDF) has many of the same characteristics as wood and bagasse and receives its heating value from the cellulose contained in it. If given proper preparation, RDF can have a heating value as high as lignite. RDF has a high ash but low sulfur content. The heating value of RDF has increased in recent years because of the large amounts of cardboard, plastics, and other synthetic materials used. Typical components of RDF are paper and paper products, plastics, wood, rubber, solvents, oils, paints, and other organic materials.

F.6.3.2.2 Other conventional fuels can be burned in the same furnace along with RDF. Older installations may also be converted to burn RDF.

F.6.3.2.3 A number of complex factors must be considered before attempting conversion to RDF firing. Additional information can be obtained from the boiler manufacturer.

F.7 Special Considerations. For special problems in handling refuse fuels, see NFPA 850, *Recommended Practice for Fire Protection for Electric Generating Plants and High Voltage Direct Current Converter Stations.*

Annex G Stoker Descriptions

This annex is not a part of the requirements of this NFPA document but is included for informational purposes only.

G.1 Single or Multiple Retort Underfeed Stoker. Figure G.1(a) shows a cross-sectional view of a single retort underfeed stoker. Figure G.1(b) shows components of a multiple retort underfeed stoker.

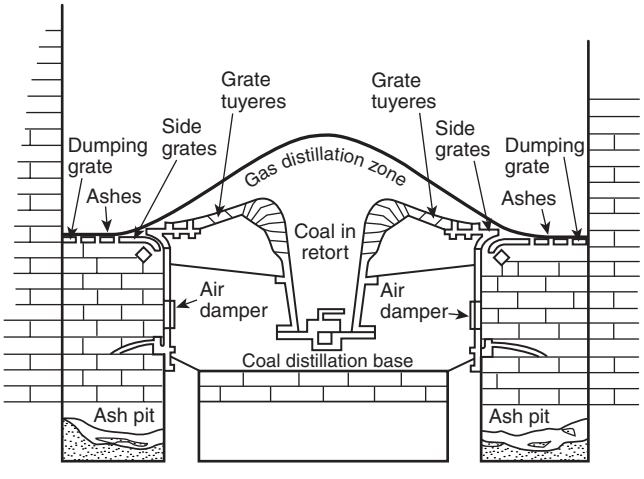

FIGURE G.1(a) Cross-Sectional View of Single Retort Underfeed Stoker in Operation. ***(Reprinted with permission of Detroit Stoker Company.)***

G.1.1 Fuel Subsystem. The fuel combusted with an underfeed stoker is typically coal or wood. The fuel system can be as simple as manual loading of a live hopper or automatic loading from a fuel storage facility. Either way, fuel must be delivered at proper sizing and quantity to the live hopper to maintain an adequate fuel supply in the hopper. The live hopper has an open bottom that delivers fuel by gravity to the feed screw. Fuel is conveyed to the grate area by means of the feed screw at a variable speed, based on boiler demand. Some underfeed stokers use a reciprocating ram instead of a feed screw. Fuel is forced upward and outward through the retort, onto the tuyeres, at which point it is combusted.

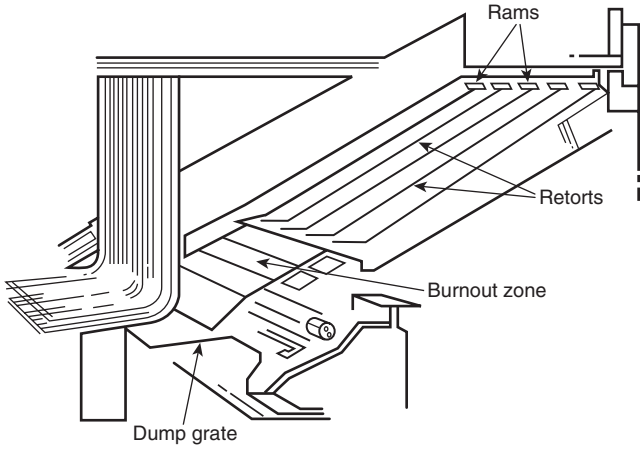

FIGURE G.1(b) Multiple Retort Underfeed Stoker Showing Components. ***(Reprinted with permission of Detroit Stoker Company.)***

G.1.2 Air Subsystem. Air is supplied under the grate (undergrate air plenum) by means of a forced draft fan (undergrate air fan). Overfire air is optional and is supplied in any or all of the furnace walls. Underfeed stokers must be balanced draft units.

G.1.2.1 At least 10 percent of the total air required for combustion at maximum continuous rating should be provided as overfire air when used.

G.1.3 Ash Subsystem. A dump grate is used to deposit ash into an ash pit. Ash is typically manually removed from the ash pit through ash doors on the front of the unit.

G.2 Overfeed Mass Burning Stoker. Overfeed mass burning stokers include not only chain and traveling grate stokers for coal firing but also the municipal solid waste (MSW) stoker for mass burning of unprepared municipal waste.

G.2.1 Overfire air should be provided in a quantity not less than 15 percent of the total air required for combustion (theoretical plus excess) at maximum continuous rating. This overfire air should be arranged to effectively cover the active burning area of the grate.

G.2.2 The recommended grate heat release should not exceed 1.420 MW_t/m^2 (450,000 $Btu/hr/ft^2$) of effective air admitting grate area. Maximum grate heat release rates per linear dimension of stoker width should be 8.66 MW_t per linear meter (9.0 million Btu/hr per linear foot) of stoker width without arches and 10.4 MW_t per linear meter (10.8 million Btu/hr per linear foot) with arches.

G.2.3 This stoker is sensitive to changes in fuel sizing and distribution.

G.2.4 Means should be provided for the delivery of fuel to the stoker hopper without size segregation.

G.2.5 Ash softening temperature should be 1204°C (2200°F) or higher.

Copyright 2014 National Fire Protection Association (NFPA). Licensed, by agreement, for individual use and download on October 4, 2014 to LEADER and READER for designated user PATTARAPORN SRITRAKOOL. No other reproduction or transmission in any form permitted without written permission of NFPA. For inquires or to report unauthorized use, contact licensing@nfpa.org.

G.2.6 The ash-fired total moisture in the coal should be a maximum of 20 percent by weight.

G.2.7 Means should be provided for tempering coals having free-swelling indices above 5 by adding moisture to a maximum of 15 percent by weight.

G.2.8 The volatile matter on a dry basis should be not less than 22 percent without special arch construction.

G.2.9 Coal should have a minimum ash content of 4 percent and a maximum of 20 percent (dry basis), to protect the grates from overheating and to maintain ignition.

G.2.10 Chain and Traveling Grate Stoker. Figure G.2.10 shows a side view of a chain grate overfeed stoker.

G.2.10.1 Chain and traveling grate stokers are normally used for coal firing and are similar except for grate construction. The grate in these stokers resembles a wide belt conveyor, moving slowly from the feed end of the furnace to the ash discharge end. Coal feeds from a hopper under control of a manually controlled gate, which establishes fuel bed thickness. Furnace heat ignites the coal and vaporization begins. As the fuel bed moves along slowly, the coke formed is burned and the bed gets progressively thinner as the ash is automatically discharged at the rear of the stoker. To control the combustion air requirements and fuel bed resistances along the grate length, the stoker is zoned or sectionalized with a manually operated damper in each section. Air for combustion can enter from the bottom through both grates or from the side between the top and bottom grates. An automatic combustion control system is furnished with this firing system. However, the coal feed gate and the distribution of undergrate air and overfire air can be adjusted manually to meet the varying characteristics of the fuel.

G.2.10.2 These stokers are used mainly for medium-sized industrial boilers with heat inputs from 11.72 MW_t (40 million Btu/hr) to 49.8 MW_t (170 million Btu/hr). Coal sizing should be 25.4 mm (1 in.) with approximately 20 percent to 50 percent passing through a 6.35 mm (¼ in.) round mesh screen. This stoker will handle such fuels as bituminous coals, anthracite coals, coke breeze, sub-bituminous coals, and lignite. This stoker produces low particulate emission.

G.2.10.3 The coal requirements of this stoker, especially sizing and chemical composition, are important for successful operation. The free-swelling index should not exceed 5 on a scale of 1 to 10 without coal tempering, or 7 with coal tempering.

G.2.11 Vibrating Grate Stoker. Figure G.2.11 shows a side view of a water-cooled vibrating grate stoker.

G.2.11.1 The vibrating grate stoker is water cooled, with an inclined, intermittently vibrating grate surface to slowly move the fuel bed down the inclined grate from the feed end of the furnace to the ash discharge end. Coal is fed from a hopper onto the inclined grate surface to form the fuel bed. The fuel bed thickness is established by a coal gate at the fuel hopper outlet and an adjustable ash dam at the ash discharge end.

G.2.11.2 Furnace heat ignites the coal and distillation begins. As the fuel bed moves along slowly, the coke formed is burned and the bed gets progressively thinner as the ash is automatically discharged at the rear of the stoker. To control the combustion air requirements in relation to varying fuel bed resistances along the grate length, combustion air enters from the bottom of the grates through zoned or sectionalized plenum chambers. Each zoned section is furnished with a manually operated control damper. An automatic combustion control

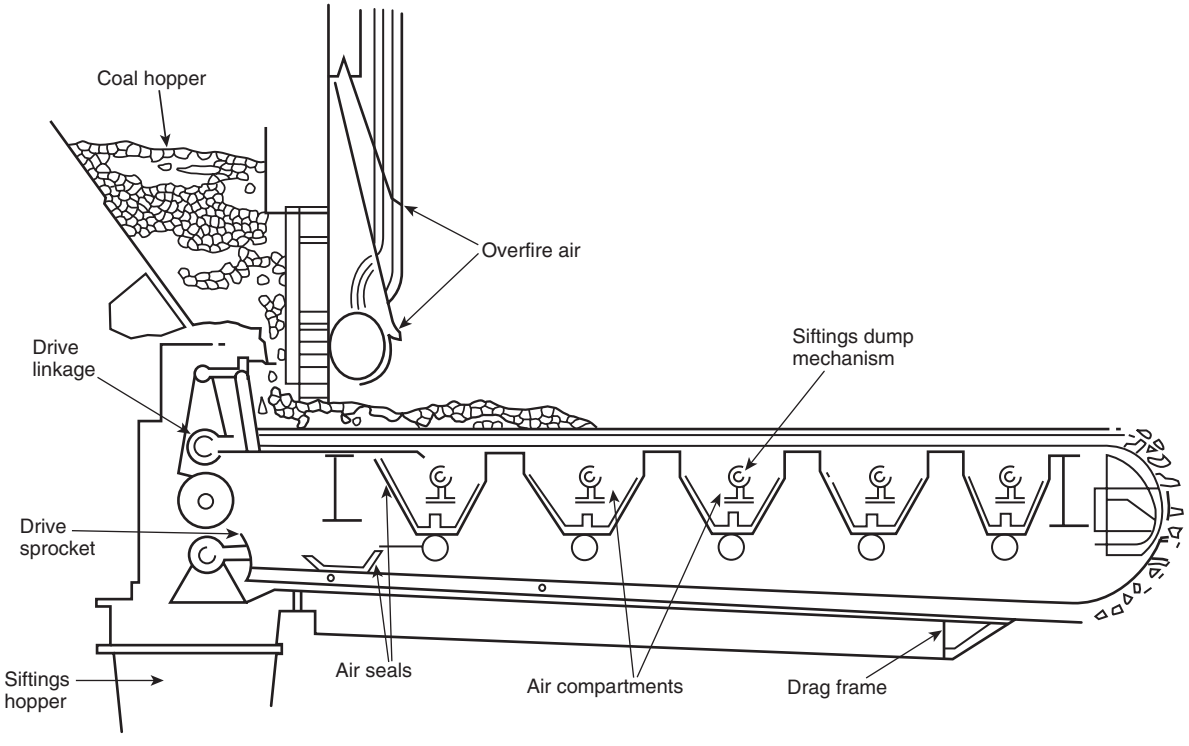

FIGURE G.2.10 Side View of Chain Grate Overfeed Stoker. *(Reprinted with permission of Detroit Stoker Company.)*

Copyright 2014 National Fire Protection Association (NFPA). Licensed, by agreement, for individual use and download on October 4, 2014 to LEADER and READER for designated user PATTARAPORN SRITRAKOOL. No other reproduction or transmission in any form permitted without written permission of NFPA. For inquires or to report unauthorized use, contact licensing@nfpa.org.

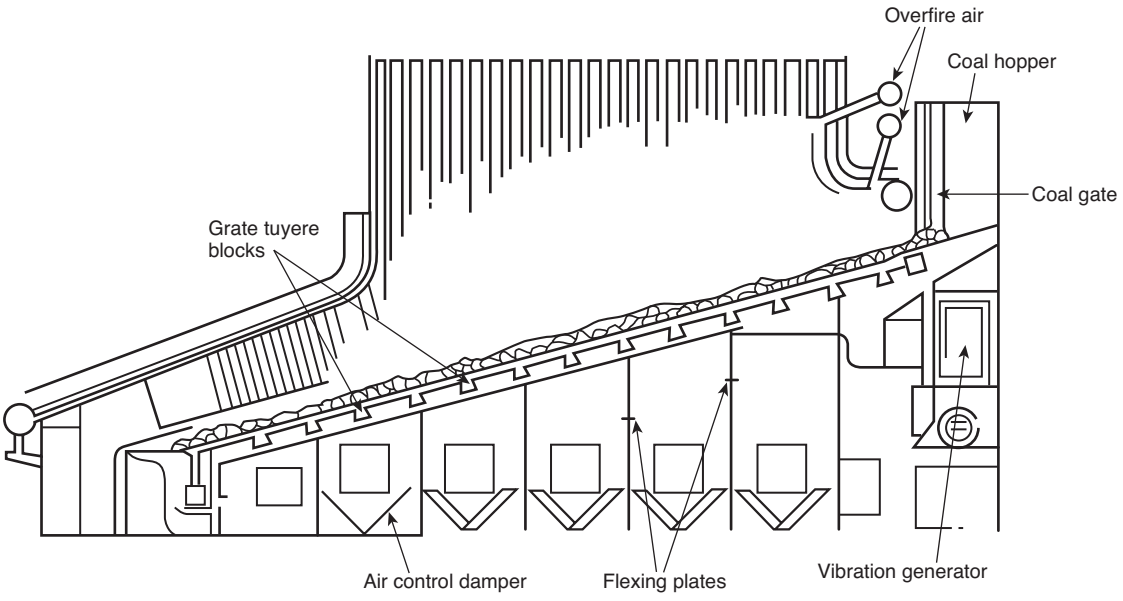

FIGURE G.2.11 Side View of a Water-Cooled Vibrating Grate Stoker. *(Reprinted with permission of Detroit Stoker Company.)*

system is furnished with this firing system. The vibration generator that conveys the fuel bed is controlled automatically by cycle timers connected to the combustion control system. However, the coal feed gate and the distribution of undergrate air and overfire air can be adjusted manually to meet the varying characteristics of the fuel.

G.2.11.3 These stokers are used mainly for medium-sized industrial boilers with heat inputs from 20.5 MW_t (70 million Btu/hr) to 41.0 MW_t (140 million Btu/hr). They are designed to burn low-ranking coals. Coal sizing should be 25.4 mm (1 in.) with approximately 20 percent to 50 percent passing through a 6.35 mm (¼ in.) round mesh screen.

G.2.11.4 Response to load changes is slow — faster than the underfeed but much slower than the spreader stoker.

G.2.12 MSW Stoker. Figure G.2.12 shows a side view of a traveling grate overfeed stoker.

G.2.12.1 The grate of an inclined stoker resembles a staircase and is used to move refuse from the feed end of the furnace to the ash discharge end. Refuse is fed from a charging hopper under control of a mechanical system, which establishes fuel bed thickness. A mechanical system then agitates and conveys the refuse down this incline by continuous agitation. This agitation is required to expose all the refuse to the air to increase the burning rate and complete combustion. The individual plenums under the grates provide a means of distributing air to a particular location. This undergrate air system, coupled with the overfire air, completes the air requirements for combustion.

G.2.12.2 The constantly changing firing conditions associated with the variation in the density and composition of the refuse require constant operator attention and manual adjustments.

G.2.12.3 Because feed rate is directly proportional to the stoker grate speed, the feed rate must be correlated closely with the stoker burning rate and, in turn, with combustion air supply and distribution. Because an automatic grate speed control to match actual burning rates is not always practical, the operator's duties consist of frequent visual monitoring of the combustion process and readjustments in combustion air distribution and grate speed with manually controlled systems.

G.2.12.4 This stoker is currently used for medium-size boilers with heat inputs from 8.8 MW_t (30 million Btu/hr) to 99.6 MW_t (340 million Btu/hr).

G.2.12.5 Due to the nonuniform sizing of the refuse, the response to load change is slow. Due to the nonhomogeneous nature of raw refuse, high excess air requirements can result in lower thermal efficiency of the generating system.

G.2.12.6 This type of stoker is designed to burn unprepared raw municipal waste refuse, with most of the combustion occurring on or near the grate surface. Generally, the stoker is sized for the highest anticipated refuse heat value. The heat values for refuse can vary from 6.978 MJ/kg (3.0 kBtu/lb) to 13.956 MJ/kg (6.0 kBtu/lb).

G.3 Spreader Stoker. Figure G.3 shows a side view of a spreader stoker with traveling grate.

G.3.1 General.

G.3.1.1 The spreader stoker distributes fuel into the furnace from a location above the fuel bed, with a portion of the fuel burned in suspension and a portion on the grates. Theoretically, equal energy is released from each square foot of active grate area. To accomplish this equal energy release, it is necessary to have even fuel distribution over the grate surface and even airflow through the grates from the air plenum beneath.

G.3.1.2 There are five spreader stoker grate types in general use today.

(1) A traveling grate with a continuous forward moving grate in which the return portion is on the underside, within the air plenum chamber. Ashes are conveyed to the front end
(2) A reciprocating grate, which is a stepped grate having a slow reciprocating action to convey the ashes to the front end
(3) A vibrating grate, either air-cooled or water-cooled, having an intermittent vibrating action to convey the ashes to the front end

Copyright 2014 National Fire Protection Association (NFPA). Licensed, by agreement, for individual use and download on October 4, 2014 to LEADER and READER for designated user PATTARAPORN SRITRAKOOL. No other reproduction or transmission in any form permitted without written permission of NFPA. For inquires or to report unauthorized use, contact licensing@nfpa.org.

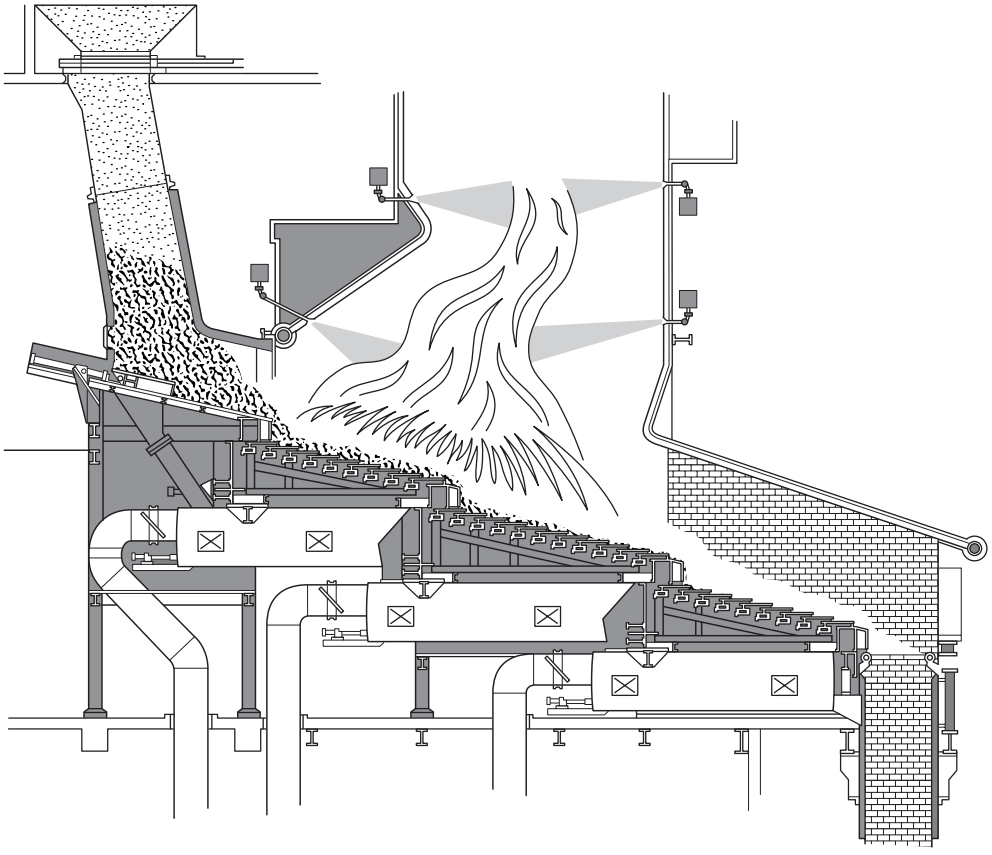

FIGURE G.2.12 Side View of a Traveling Grate Overfeed Stoker. *(Reprinted with permission of Detroit Stoker Company.)*

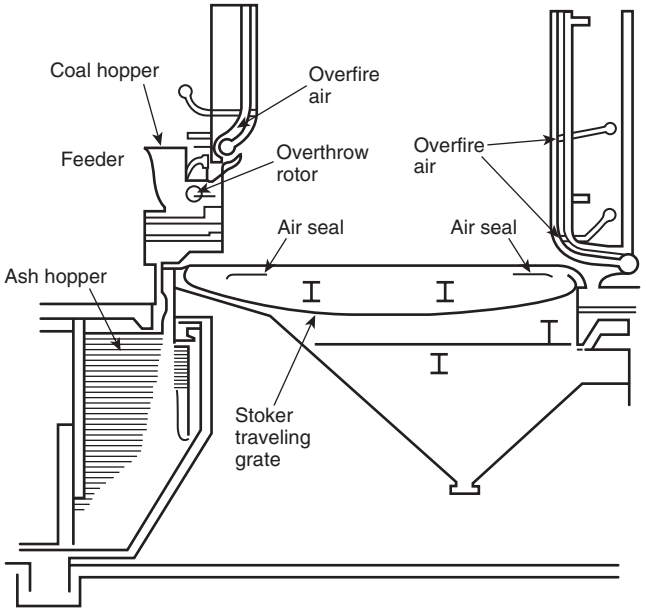

FIGURE G.3 Side View of a Spreader Stoker with Traveling Grate. *(Reprinted with permission of Detroit Stoker Company.)*

(4) A dumping grate, which manually intermittently discharges all the ashes on the grate vertically downward to the ash pit and which is seldom supplied today
(5) A stationary grate, which is typically used for low-ash fuels

G.3.1.3 The spreader stoker contains fuel feeders located in the front wall in sufficient quantity to ensure even lateral distribution of the fuel across the width of the grate. The design of the fuel feeder also incorporates methods to achieve even longitudinal distribution of fuel. These feeders take on many different designs and shapes, depending on the fuel and the manufacturer.

G.3.1.4 A spreader stoker system can include a cinder return system. Its function is to return a portion of cinders leaving the furnace and collected in various cinder hoppers to the furnace for reburning.

G.3.1.5 A spreader stoker includes an overfire air turbulence system. Its function is to provide mixing of the fuel and oxygen. Overfire air nozzles are located in the area of the furnace of highest temperature for highest efficiency and burnout of volatiles and carbon particles.

G.3.1.6 Spreader stokers are utilized on boilers having heat inputs from 8.8 MW_t (30 million Btu/hr) to 240.3 MW_t (820 million Btu/hr), depending on the fuel and type of spreader stoker grate. Spreader stokers have a very thin, active fuel bed and thus can respond to load changes quite rapidly.

Copyright 2014 National Fire Protection Association (NFPA). Licensed, by agreement, for individual use and download on October 4, 2014 to LEADER and READER for designated user PATTARAPORN SRITRAKOOL. No other reproduction or transmission in any form permitted without written permission of NFPA. For inquires or to report unauthorized use, contact licensing@nfpa.org.

G.3.2 Spreader stokers are not normally applied to coals having a volatile matter on a dry and ash-free basis of less than 20 percent. Moisture content affects the burning of subbituminous and lignitic coals on a spreader stoker. Preheated air is recommended for moisture contents greater than 25 percent. Ash content in excess of that required for grate protection has little effect on the selection of fuels for spreader stokers, because it affects only grate speed. Ash softening temperature is a consideration only on reciprocating, vibrating, or dump grate spreader stokers.

G.3.3 All wood, municipal waste, and other wastes listed in Annex F can be burned on spreader stokers. Wood with moisture content up to 55 percent can be burned without auxiliary fuel as long as preheated air temperature is sufficiently high. Municipal waste can be burned on an overfeed spreader stoker only as RDF. Of greatest importance in looking at refuse fuels is size consist.

Annex H Guidelines for Determining the Minimum Permitted Temperature for Feeding a Fuel into a Fluidized Bed

This annex is not a part of the requirements of this NFPA document but is included for informational purposes only.

H.1 Scope. This method describes a procedure for establishing the minimum fluid bed temperature at which a fuel ignites and sustains controllable combustion. The test approaches described in Section H.3 and Section H.4 are typical approaches followed by manufacturers to assist in design activities for this equipment. The test method described in Section H.5 is an important boiler commissioning activity performed on each new unit by the manufacturer and observed by other interested parties.

H.2 General Consideration. The purpose of this recommended procedure is to establish an initial minimum temperature permissive above which fuel can be fed into the fluidized bed. This initial temperature permissive should be verified by tests in the full-scale plant.

This procedure can be used by the fluidized bed combustor (FBC) supplier to determine the minimum fluidized bed temperature at which fuel can be fed into the furnace. The FBC supplier can use this temperature for defining the fuel permissive safety system for both start-up and hot restart.

The FBC supplier and operator should be aware of the following concerns and cautions:

(1) Pilot test information can differ from full-scale unit operation. The supplier should be aware of such differences and include a safety margin based on actual experience.
(2) Typically, there is a time delay between fuel feed command and fuel entering the furnace. This is reflected in a decrease in temperature of the fluidized bed material during the period between bed fluidization and the arrival of the fuel in the bed. Bed cooling during this delay period could cause the temperature to fall below the fuel feed permissive.
(3) The minimum bed temperature at which fuel ignites and causes the bed material and freeboard temperature to increase is likely to be dependent on the air velocities, the air-fuel ratio, and the heat extraction surfaces within the combustion zones. The FBC supplier should consider the effect of these factors for both cold start-up and hot restart operation of the FBC.
(4) During initial plant start-up, the temperature permissive for fuel flow is usually verified in the installation. This test might show that a higher permissive fluidized bed temperature is necessary to ignite the fuel. The supplier anticipates this possibility by providing the means for heating the bed to a higher temperature than that indicated by the pilot combustion tests.

H.3 Test Setup and Measurements.

H.3.1 Pilot Test Setup and Measurements. The test should use a pilot fluidized bed combustion system that simulates the supplier's full-scale equipment. As a minimum, the test should include the following:

(1) A fuel feed system with feed rate control and feed rate monitor.
(2) Air controls and measurements of the fluidizing air, fuel transport air, and secondary air as applicable.
(3) Thermocouples to monitor the temperatures of the incoming airstreams, the bed temperature and freeboard temperature, and the temperature of the combustion products exhausting the freeboard.
(4) Recording instruments that provide a record of the fluidized bed and freeboard temperatures. The printout scale and speed should be adjustable to provide a clear history of time and temperatures.
(5) Bed material that simulates the size distribution and material density projected for the full-scale system.
(6) Solid fuel that is representative of samples of the design fuels. Control should be exercised to ensure that fuel moisture content and size are properly simulated. If dictated by the pilot unit restrictions for maximum fuel size, the oversized fraction of fuel can be removed from the test feedstock, or the maximum fuel size can be reduced by means of additional processing.
(7) Equipment to allow heat extraction from the fluidized bed or furnace freeboard, as appropriate, to simulate the supplier's equipment design.
(8) A pilot test device that is rated at a minimum throughput capacity of 293 kW_t (1 million Btu/hr).

H.3.2 Bench-Scale Flammability Test Setup. An alternate means of establishing an initial minimum ignition temperature by test is through the use of conventional ignition or flammability tests. The intent of these tests is not so much to establish directly a minimum ignition temperature, but rather to allow the manufacturer to extrapolate an ignition temperature based on the results of a given test and similar tests on fuels fired at other actual installations. The correlation between the ignition temperature (flammability index) yielded by tests of various fuels at an actual plant and the verified minimum ignition temperature established for that plant and the results of the testing performed on the unknown fuel are sufficient to yield an initial set point for the unknown fuel. As a minimum, the following should be used for the test:

(1) A furnace with a controllable heat source
(2) Thermocouples to monitor the temperature of the furnace
(3) Representative samples of the fuel to be fired (The samples should be prepared in accordance with normal procedures for the test setup to be utilized.)

The intent is not to require any specific test but rather to use the same test on multiple fuel samples to establish a relationship between the unknown fuel and its appropriate minimum ignition temperature based on the relationship

Copyright 2014 National Fire Protection Association (NFPA). Licensed, by agreement, for individual use and download on October 4, 2014 to LEADER and READER for designated user PATTARAPORN SRITRAKOOL. No other reproduction or transmission in any form permitted without written permission of NFPA. For inquires or to report unauthorized use, contact licensing@nfpa.org.

of other known fuels and their proven ignition temperatures.

H.4 Test Procedure. The proposed test procedure is a repetitive process that incrementally reduces the bed temperature until the system fails the success criteria for fuel ignition and sustained combustion. A fuel might have a very low temperature for ignition and sustained combustion, possibly one that is considerably lower than the operating bed temperature range of interest. Where such fuel is used, the FBC equipment supplier may be permitted to terminate the tests after they demonstrate successful operation at a temperature lower than the proposed minimum ignition temperature.

H.4.1 Test Operation.

H.4.1.1 Pilot Test Operation.

H.4.1.1.1 With fans operating, the FBC test unit should be stabilized at 56°C to 111°C (100°F to 200°F) above the minimum bed temperature at which the fuel is known to sustain combustion. Verification of instrument operation and calibration should be made, and operating conditions should be adjusted to the selected air velocity excess air and bed temperature. Fuel flow, airflows, and temperatures should be monitored and recorded.

H.4.1.1.2 The fuel should be shut off, and the bed temperature should be allowed to fall. The fuel feed conveying and metering equipment should be kept primed to minimize the fuel delivery delay time at fuel restart. At 28°C (50°F) below the previously demonstrated temperature for sustaining combustion, the fuel flow should be resumed at the rate used in H.4.1.1.1 for a maximum of 90 seconds.

H.4.1.1.3 In a successful test, the temperature responses of the bed and freeboard are to be smooth and are to indicate a reversal of the fluidized bed and freeboard temperature gradients. If the success criteria are met, H.4.1.1.1 through H.4.1.1.3 should be repeated at successively lower temperatures. If the success criteria are not met, the test should be terminated and a postpurge completed.

H.4.1.2 Minimum Permitted Bed Temperature. The minimum permitted bed temperature for admitting fuel flow into the fluidized bed should be not less than the minimum temperature at which "success" was achieved in H.4.1.1.

H.4.2 Bench-Scale Flammability Test.

H.4.2.1 Test Procedure.

H.4.2.1.1 The test furnace should be stabilized at 56°C to 111°C (100°F to 200°F) above the expected ignition temperature of the fuel.

H.4.2.1.2 A fuel sample should be admitted.

H.4.2.1.3 If the fuel ignites, the test should be repeated after reducing the temperature of the furnace.

H.4.2.1.4 If the fuel fails to ignite, the test should be terminated. The ignition temperature of the fuel is the last value that satisfies H.4.2.1.3.

H.4.2.2 Minimum Permitted Bed Temperature. The initial minimum fuel permissive is determined by correlating the results of the tests of the unknown fuel sample with similar tests performed for fuels used in other units of similar design and the corresponding minimum ignition temperatures established for those fuels in the respective units. It should be noted that this procedure, as in the procedure described in H.4.1.1, has a degree of uncertainty, and appropriate safety margins should be implemented until the testing on the actual unit can be completed.

H.5 Verifying Minimum Temperature at Actual Plant. The FBC supplier and the operator should agree to a procedure similar to that described in H.4.1.1 for verifying a minimum bed temperature for fuel flow start in the full-scale plant. A margin of safety should be added to any value derived through test. Where fuel sources change the minimum temperature, the test should be repeated.

Annex I Sample Ordinance Adopting NFPA 85

This annex is not a part of the requirements of this NFPA document but is included for informational purposes only.

I.1 The following sample ordinance is provided to assist a jurisdiction in the adoption of this code and is not part of this code.

ORDINANCE NO. _____

An ordinance of the *[jurisdiction]* adopting the *[year]* edition of NFPA *[document number]*, *[complete document title]*, and documents listed in Chapter 2 of that *[code, standard]*; prescribing regulations governing conditions hazardous to life and property from fire or explosion; providing for the issuance of permits and collection of fees; repealing Ordinance No. _____ of the *[jurisdiction]* and all other ordinances and parts of ordinances in conflict therewith; providing a penalty; providing a severability clause; and providing for publication; and providing an effective date.

BE IT ORDAINED BY THE *[governing body]* OF THE *[jurisdiction]*:

SECTION 1: That the *[complete document title]* and documents adopted by Chapter 2, three (3) copies of which are on file and are open to inspection by the public in the office of the *[jurisdiction's keeper of records]* of the *[jurisdiction]*, are hereby adopted and incorporated into this ordinance as fully as if set out at length herein, and from the date on which this ordinance shall take effect, the provisions thereof shall be controlling within the limits of the *[jurisdiction]*. The same are hereby adopted as the *[code, standard]* of the *[jurisdiction]* for the purpose of prescribing regulations governing conditions hazardous to life and property from fire or explosion and providing for issuance of permits and collection of fees.

SECTION 2: Any person who shall violate any provision of this code or standard hereby adopted or fail to comply therewith; or who shall violate or fail to comply with any order made thereunder; or who shall build in violation of any detailed statement of specifications or plans submitted and approved thereunder; or fail to operate in accordance with any certificate or permit issued thereunder; and from which no appeal has been taken; or who shall fail to comply with such an order as affirmed or modified by a court of competent jurisdiction, within the time fixed herein, shall severally for each and every such violation and noncompliance, respectively, be guilty of a misdemeanor, punishable by a fine of not less than $ _____ nor more than $_____ or by imprisonment for not less than _____ days nor more than _____ days or by both such fine and imprisonment. The imposition of one penalty for any violation shall not excuse the violation or permit it to continue; and all such persons shall be required to correct or remedy such violations or defects within a reasonable time; and when not otherwise specified the application of the above penalty

Copyright 2014 National Fire Protection Association (NFPA). Licensed, by agreement, for individual use and download on October 4, 2014 to LEADER and READER for designated user PATTARAPORN SRITRAKOOL. No other reproduction or transmission in any form permitted without written permission of NFPA. For inquires or to report unauthorized use, contact licensing@nfpa.org.

shall not be held to prevent the enforced removal of prohibited conditions. Each day that prohibited conditions are maintained shall constitute a separate offense.

SECTION 3: Additions, insertions, and changes — that the [year] edition of NFPA *[document number], [complete document title]* is amended and changed in the following respects:

List Amendments

SECTION 4: That ordinance No. _____ of *[jurisdiction]* entitled *[fill in the title of the ordinance or ordinances in effect at the present time]* and all other ordinances or parts of ordinances in conflict herewith are hereby repealed.

SECTION 5: That if any section, subsection, sentence, clause, or phrase of this ordinance is, for any reason, held to be invalid or unconstitutional, such decision shall not affect the validity or constitutionality of the remaining portions of this ordinance. The *[governing body]* hereby declares that it would have passed this ordinance, and each section, subsection, clause, or phrase hereof, irrespective of the fact that any one or more sections, subsections, sentences, clauses, and phrases be declared unconstitutional.

SECTION 6: That the *[jurisdiction's keeper of records]* is hereby ordered and directed to cause this ordinance to be published.

[NOTE: An additional provision may be required to direct the number of times the ordinance is to be published and to specify that it is to be in a newspaper in general circulation. Posting may also be required.]

SECTION 7: That this ordinance and the rules, regulations, provisions, requirements, orders, and matters established and adopted hereby shall take effect and be in full force and effect *[time period]* from and after the date of its final passage and adoption.

Annex J Safety

This annex is not a part of the requirements of this NFPA document but is included for informational purposes only.

J.1 General Safety Precautions. Protective clothing, including but not limited to hard hats and safety glasses, should be used by personnel during maintenance operations.

J.2 Special Safety Precautions. Severe injury and property damage can result from careless handling of unconfined pulverized fuel; therefore, extreme caution should be used in cleaning out plugged burners, burner piping, pulverized fuel bins, feeders, or other parts of the system.

J.3 Welding and Flame Cutting. See NFPA 51, *Standard for the Design and Installation of Oxygen–Fuel Gas Systems for Welding, Cutting, and Allied Processes*; NFPA 51B, *Standard for Fire Prevention During Welding, Cutting, and Other Hot Work*; and NFPA 241, *Standard for Safeguarding Construction, Alteration, and Demolition Operations*. For work on pulverized fuel systems, see Chapter 9 of this document.

Fire-resistant blankets or other approved methods should be used in a manner so as to confine weld spatter or cutting sparks.

A careful inspection of all areas near welding or cutting areas, including the floors above and below, should be made when the job is finished or interrupted, and such areas should be patrolled for a period sufficient to make certain that no smoldering fires have developed.

Where flammable dusts or dust clouds are present, sparking electrical tools should not be used. All lamps should be suitable for Class II, Division 1 locations as defined in *NFPA 70, National Electrical Code*.

Either ground-fault protected or specially approved low voltage (3 volt to 6 volt or 12 volt) extension cords and lighting should be used for all confined spaces and where moisture might be a hazard.

Explosion-operated tools and forming techniques should not be used where flammable dust or dust clouds are present. Where such operations are necessary, all equipment, floors, and walls should be cleaned, and all dust accumulation should be removed by an approved method. A careful check should be made to ensure that no cartridges or charges are left in the work area.

J.4 Confined Space. A confined space is any work location or enclosure in which any of the following could possibly exist:

(1) The dimensions are such that a person 1.8 m (6 ft) tall cannot fully stand up in the middle of the space, or that person's arms cannot be extended in all directions without hitting the enclosure.
(2) Access to or from the enclosure is by manhole, hatch, port, or other relatively small opening that limits ingress and egress to one person at a time.

Confined spaces include, but are not limited to, ducts, heaters, wind boxes, cyclones, dust collectors, furnaces, bunkers, and bins.

The following specific procedures should be developed for and used by personnel entering a confined space:

(1) Positive prevention of inadvertent introduction of fuel, hot air, steam, or gas.
(2) Positive prevention of inadvertent starting or moving of mechanical equipment or fans.
(3) Prevention of the accidental closing of access doors or hatches.
(4) Inclusion of tags, permits, or locks to cover confined space entry.
(5) Determination of the need for ventilation or self-contained breathing apparatus where the atmosphere might be stagnant, depleted of oxygen, or contaminated with irritating or combustible gases. Tests for an explosive or oxygen-deficient atmosphere should be made.
(6) Provision of a safety attendant. The safety attendant should remain outside the confined space with appropriate rescue equipment and should be in contact (preferably visual contact) with those inside.
(7) Provision of safety belts or harnesses, which should be tied off where such use is practical.

J.5 Raw Fuel Bunkers. In addition to the general safety precautions of A.4.4.1.1, additional specific provisions for entering and working in fuel bunkers or bins should be made, recognizing the high probability of the presence of combustible or explosive gases and the hazards associated with shifting or sliding fuel.

No one should be permitted to enter fuel bunkers or bins without first notifying the responsible supervisor and obtaining appropriate permits, tags, clearances, and other requirements.

The responsible supervisor should inspect the bunker, see that all necessary safety equipment is on hand, and see that a safety attendant, who should have no other duties during the job, is also on hand. The supervisor should review with the safety attendant and the workers the scope of the job and safety procedures to be followed.

Copyright 2014 National Fire Protection Association (NFPA). Licensed, by agreement, for individual use and download on October 4, 2014 to LEADER and READER for designated user PATTARAPORN SRITRAKOOL. No other reproduction or transmission in any form permitted without written permission of NFPA. For inquires or to report unauthorized use, contact licensing@nfpa.org.

No smoking, flames, or open lights should be permitted. All lamps should be suitable for Class II, Division 1 locations as defined in *NFPA 70, National Electrical Code*.

Tests should be made for the presence of an explosive or oxygen-deficient atmosphere in a bunker or bin. If such an atmosphere is found, positive ventilation should be provided, and entry should be prohibited until the atmosphere returns to safe limits. Sufficient retests should be made during the course of the work to ensure a safe atmosphere. If a safe atmosphere is not maintained, the bunker should be evacuated. However, a nonexplosive, oxygen-deficient atmosphere should be permitted to be entered with suitable breathing apparatus.

No person should enter a bunker containing burning fuel.

No person should enter a bunker or walk on the fuel unless the safety attendant is present and the person is equipped with a safety belt or harness and a lifeline. The lifeline should be secured to a support above the person and should have only sufficient slack to permit limited movement necessary to perform the job. The lifeline should be manila rope at least 12.7 mm (½ in.) in diameter, or equivalent, and in good condition.

The safety attendant should remain outside or above the bunker and should keep the workers in full view at all times. A means of communication should be provided to the safety attendant in case additional help is needed.

Whenever practical, work should be done from platforms, ladders, scaffolds, and the like, rather than from the surface of the fuel itself.

No one should walk on or work on a fuel surface that is more than 0.9 m (3 ft) lower than the highest point of the surrounding fuel, to avoid the possibility of being covered by sliding fuel.

Full-face respirators or respirators and goggles should be worn where dust conditions make them necessary, as directed by the responsible supervisor or the safety attendant.

J.6 Hazardous Energy Control Program. Equipment and systems covered by this standard can have high energy — mechanical, electrical, hydraulic, thermal, chemical, pneumatic, radiation, etc. — which can be potentially hazardous. Each facility should have a hazardous energy control (HEC) program in accordance with OSHA standards to prevent the unexpected release of potentially hazardous energies during the maintenance, operation, and servicing of equipment and systems. The program should consist of a comprehensive set of equipment-specific HEC procedures. The program should also include personnel training requirements and guidelines for periodic review of the procedures.

Specific HEC procedures should be established and implemented for the shutdown, isolation, tagout, verification, and setup for return to service of each piece of equipment and system.

When changes are made to equipment or systems, HEC procedures should be reviewed and revised as necessary. Since control system changes often can be made easily through programming modifications, special attention should be paid to such changes to ensure that any impact on HEC procedures for equipment or systems is properly considered and addressed.

Annex K Fuel Hazards

This annex is not a part of the requirements of this NFPA document but is included for informational purposes only.

K.1 Common hazards are involved in the combustion of fuels. In addition, each of these fuels has special hazards related to its physical characteristics.

K.2 Gas Firing. The following items should be considered in the design of the fuel gas firing systems:

(1) Gas is colorless; therefore, a leak usually cannot be detected visually. Also, reliance cannot be placed on detection of a gas leak by the presence of odor.
(2) Potentially hazardous conditions are most likely to occur within buildings, particularly where the gas piping is routed through confined areas. In the latter instance, adequate ventilation should be provided. Outdoor steam generators tend to minimize confined area problems.
(3) Natural gas can be either "wet" or "dry." A wet gas usually implies the presence of distillate, which could be characteristic of a particular source. In the case of such a wet gas, the carryover of distillate into the burners could result in a momentary flameout and possible reignition. Reignition could result in an explosion. Therefore, special precautions should be taken with wet gas supply systems. *(See* NFPA 54, *National Fuel Gas Code.)*
(4) Discharges from relief valves or from any other form of atmospheric vents can become hazardous unless special precautions are taken.
(5) Maintenance and repair of gas piping can be hazardous unless proper methods are used for purging and recharging the line before and after making the repairs. *(See* NFPA 54, *National Fuel Gas Code.)*
(6) Most natural gas that is supplied to boilers typically is lighter than air and presents no special problems in the atmosphere over and above those addressed in this code. Because of developing energy cost considerations, many boilers are using a gas or a mixture of gases with heavier-than-air characteristics. These heavier-than-air gases, such as propane-air mixtures, refinery gases, and so forth, require special consideration in storing, handling, and venting to prevent accumulations in depressions or in confined areas.
(7) The nature of gas fuel creates the possibility of severe departures from design air-fuel ratios, without any visible evidence at the burners, furnace, or stack, that could escalate into a progressively worsening condition. Therefore, combustion control systems that respond to reduced boiler steam pressure or steam flow with an impulse for more fuel, unless protected or interlocked to prevent a fuel-rich mixture, are potentially hazardous. This hazard would also apply to firing with fuel or air on manual without the aforementioned interlocks or alarms.
(8) Widely different characteristics of gas from either single or multiple sources could result in a significant change in heat input rate to the burners without a corresponding change in airflow.
(9) Relief valves and atmospheric vents should discharge into areas away from building ventilation systems, sources of ignition, or other areas where the discharge gases create a hazard.
(10) Gas piping should be purged before and after maintenance and repair as defined in NFPA 54, *National Fuel Gas Code*.

K.3 Oil Firing. The following items should be considered in the design of the fuel oil–firing systems:

(1) Firing of oil fuel into a HRSG can create a special hazard by causing soot accumulations in low temperature sections.
(2) Small oil leaks can result in serious fire damage.
(3) Water or sludge in fuel oil storage tanks or improperly located suction takeoffs from the storage tank can result

Copyright 2014 National Fire Protection Association (NFPA). Licensed, by agreement, for individual use and download on October 4, 2014 to LEADER and READER for designated user PATTARAPORN SRITRAKOOL. No other reproduction or transmission in any form permitted without written permission of NFPA. For inquires or to report unauthorized use, contact licensing@nfpa.org.

in hazardous interruptions or pulsations of the fuel supply to the burners. A flameout, either immediately or at a later time, can result because of plugged strainers or burner tips.

(4) Widely different characteristics of fuel oil from either a single source or multiple sources can result in a significant change in heat input rate to the burner(s) without an equivalent change in airflow or without an appropriate change in fuel oil temperature to restore the flowing viscosity to the proper value. Different shipments of fuel oil with dissimilar characteristics can cause a precipitation of sludge that can lead to hazards.

(5) Inserting an oil gun in the burner assembly without a tip, new gaskets, or a sprayer plate is a constant hazard and can result in an unsafe operating condition.

(6) Clear distillate fuels have low rates of conductivity and generate static electrical charges in the fuel stream that can be dangerous unless flowing velocities are limited. *(See* NFPA 77, *Recommended Practice on Static Electricity*, and *API RP 2003, Recommended Practice for Protection Against Ignitions Arising out of Static, Lightning, and Stray Currents.)*

(7) Maintenance and repair of oil piping can be hazardous unless correct methods are used for purging and recharging the line before and after making repairs. *(See* NFPA 31, *Standard for the Installation of Oil-Burning Equipment.)*

(8) The incompressibility of fuel oil can create very rapid transients in oil flow through operating burners when the following occur:
   (a) Rapid operation of the oil supply valve
   (b) Rapid operation of individual burner shutoff valves
   (c) Rapid operation of the regulating valve in the return oil line from the burner header (on systems using this type of control)

(9) Where oils that need preheating are fired, the viscosity of oil flowing to the burners should be held within limits to maintain proper atomization.

(10) On installations designed to fire both heated and unheated fuel oils, consideration should be given to the design of the burner control system to ensure that proper interlocks are activated for the selected fuel oil. Similar considerations should also be given to the fuel oil piping supply to the burner as well as the oil recirculating piping to the fuel storage tanks, depending on the arrangement of the equipment provided.

(11) Proper pumping and atomization of fuel oils are dependent on control of viscosity. Changes in viscosity in relation to temperature vary for different oils and blends of oils. Close attention should be given to the design and operation of viscosity control systems for each fuel where its source or properties are variable.

(12) The operation of air heater sootblowers should be in accordance with the recommendations of the air heater manufacturer. Initial firing of oil fuel in a cold boiler can create a special hazard by causing fires in air heaters.

K.4 Fuel Oil — General Considerations. The term *fuel oil* refers to liquid fuels with widely differing characteristics. A fuel oil–burning system is designed for a specific range of oil characteristics. Attempting to burn an oil whose characteristics differ widely from those for which the system is designed can cause serious operating difficulties and potential safety hazards. Therefore, care should be exercised to ensure that fuel oil received at a plant is within the specified range of the handling and burning equipment.

The more important characteristics of fuel oils are provided in ASTM specifications. It is relatively simple to identify oils that require special provisions for storing and functions such as heating, pumping, and atomizing. Generally speaking, Grades 2 and 4 have lower viscosities and less water and sediment than Grades 5 or 6 and so require fewer special provisions to ensure proper handling and burning. However, most boiler fuel oil systems are designed for Grades 5 and 6, which are heavier; therefore, such systems include provisions for preheating these usually viscous fuels. Furthermore, more care is necessary in the design and operation of fuel oil systems supplied with Grade 6 oil than with the other ASTM grades. Care should be taken to avoid flameouts attributable to interruptions or pulsation of the fuel supply or plugging of strainers or burner tips.

The following characteristics can affect the proper and safe burning of fuel oils:

(1) Fuel oil is a complex mixture of hydrocarbons of differing molecular weights and differing boiling and freezing points. When subjected to sufficiently high temperature, accumulations of the fuel partially decompose and volatilize, thus creating new liquid, gaseous, and solid fuels with unpredictable properties.

(2) Fuel oil should be introduced into the furnace as an extremely fine mist in order to mix intimately with the combustion air so that it can burn quickly and completely. In boilers, this is accomplished by spraying the fuel oil through small orifices with high-pressure drops (mechanical atomization) or by using steam or air to break up small oil streams. Viscosity and volatility are characteristics of the oil that indicate ease of atomization.

(3) Viscosity affects ease of pumping and atomization. Temperature affects viscosity significantly.

(4) Flash point is an indicator of volatility and, thus, of potential for combustible vapors.

(5) Some fuel oils contain constituents that, when overheated, can decompose and form solids or that, when exposed to low ambient temperatures, can solidify. The presence of such solids in the fuel can cause interruptions.

(6) Excessively heated oil can create vapor lock, which can prevent continuous operation. Cold oil can prevent satisfactory atomization.

(7) Contaminants in fuel can include salt, sand, sludge, water, and other abrasive or corrosive constituents. Some fuels contain waxy materials that precipitate out, clogging filters and other elements of the fuel system.

(8) Low temperature can increase viscosity, inhibit flow, or precipitate waxy materials. High temperatures can cause carbonization or excessive pressures and leakage due to fluid expansion in "trapped" sections of the system.

K.5 Coal Firing — General Considerations. The term *coal* refers to solid fuels with widely differing characteristics. A coal-burning fuel system is designed for a specific range of coal characteristics. Coals that differ widely from the range of characteristics for which the system is designed can cause serious operating difficulties and become a potential safety hazard. The coal as mined, transported, and delivered to the plant can vary in size and impurities to a degree that exceeds the capability of the plant equipment. Where coals are received from more than one source, care should be exercised to make certain that all coals received are within the specific range of the coal-handling and coal-burning equipment.

Copyright 2014 National Fire Protection Association (NFPA). Licensed, by agreement, for individual use and download on October 4, 2014 to LEADER and READER for designated user PATTARAPORN SRITRAKOOL. No other reproduction or transmission in any form permitted without written permission of NFPA. For inquires or to report unauthorized use, contact licensing@nfpa.org.

To ensure that the type of coal and its preparation are suitable for the equipment, a definition is needed that is acceptable to the equipment designer, the purchasing agency responsible for procuring the fuel, and the operating department that burns the fuel. Volatility, moisture and ash content, size of raw coal, grindability, and other characteristics are to be given close attention. The following factors influence the ultimate suitability of a particular coal:

(1) Coal is an abrasive and corrosive substance. The level of necessary equipment maintenance, therefore, could be several orders of magnitude greater than is needed for liquid and gaseous fuels.
(2) Coal changes when it is exposed to the atmosphere. It is common practice to ship and stockpile coal without protection from the weather. The properties of stored coal can change, possibly necessitating special consideration. Coal with high surface moisture can freeze in shipment or in storage, possibly necessitating special handling equipment. Changes in moisture in the coal can affect the safety and performance of the pulverizers and burners.
(3) Changes in grindability of the coal affect the capacity of the pulverizers and could affect the performance of the burners.
(4) Because coal has a high ash content, special attention should be given to problems associated with slag and ash deposits.
(5) Coal is capable of spontaneous combustion and self-heating from normal ambient temperature. This tendency increases radically when the temperature is increased. Blended or mixed coals can heat more rapidly than any of the parent coals.
(6) Volatile matter is given off by the coal. This volatile matter is a gaseous fuel that causes additional hazards.

Unburned or incompletely burned coal can settle out in low velocity areas of the boiler. Often this hot material lies dormant and covered with a thin layer of fly ash. Personnel stepping into or disturbing such deposits have experienced severe injuries. Prior to entry, cleaning of all surfaces where such combustibles can accumulate is recommended.

It takes as little as 1.4 kg (3 lb) of pulverized coal in 28.3 m^3 (1000 ft^3) of air to form an explosive mixture. Since a large boiler burns 45.4 kg (100 lb) or more of coal per second, the safe burning of pulverized coal necessitates strict adherence to planned operating sequences. *(See 6.8.5 for sequences of operation.)*

The raw coal delivered to the plant can contain foreign substances such as scrap iron, wood shoring, rags, excelsior, and rock. Much of this foreign material can interrupt coal feed, damage or jam equipment, or become a source of ignition within a pulverizer. The presence of foreign material could constitute a hazard by interrupting coal flow. This interruption could cause a total or partial flameout and possible reignition accompanied by a "puff" or an explosion. Wet coal can cause a coal hang-up in the raw coal supply system. Wide variations in the size of raw coal can result in erratic or uncontrollable coal feeding.

Other personnel hazards involved with coal-fired systems are similar to those outlined in Chapter 9.

K.6 Crude Oil — General Considerations.

K.6.1 Nature of Crude Oils. Crude oil is petroleum that is withdrawn from the ground and treated in separators, as necessary, to remove most of the dirt and water and sufficient gaseous constituents to allow safe and convenient shipping.

With regard to safety, the basic difference between crude oils and the grades of fuels defined in ASTM D 396, *Standard Specification for Fuel Oils*, is that crude oils contain dissolved light combustible hydrocarbons. These light, volatile materials are released during storage and handling or when heated. Because of this, appropriate and adequate provisions are to be made to handle, store, and burn crude oils safely in steam boiler plants. Failure to observe the necessary design, installation, operating, and maintenance procedures could result in disastrous fires or explosions or personal injury, including possible inhalation of toxic (hydrogen sulfide) gas.

Crude oil properties vary considerably. Therefore, it is desirable that flexibility be built into the facility to accommodate the expected range of properties.

Crude oil characteristics are classified according to the results of laboratory tests, and the seller and buyer are to agree on all limitations. This procedure is in contrast to fuel oils, whose properties are controlled within limits by refining to meet internationally recognized standards.

The flash points of crude oils can range from below 0°C (32°F) to over 65.6°C (150°F). Most crude oils contain volatile light ends not present in fuels meeting the requirements of ASTM D 396, *Standard Specification for Fuel Oils*. Some of these volatile hydrocarbons, such as propane, butane, and pentane, can volatilize crude oil to the atmosphere; because it is heavier than air, this vaporized material can travel for considerable distances and accumulate as a hazardous concentration.

K.6.2 Storage and Handling of Crude Oils. Extensive treatment of the storage and handling of crude oils is beyond the scope of this code. However, the safety aspects are so broad that some clarification is essential.

Special attention is directed to the following considerations:

(1) Adequate ventilation is essential in areas where oil leakage could occur (e.g., at pumps, heaters, strainers, and burner fronts or where maintenance is performed). Confined fuel-handling areas and burner fronts are to be ventilated adequately, and forced air ventilation is to be used where necessary.
(2) Tanks for crude oil storage usually conform to one of the following documents:
   (a) API 620, *Standard for Design and Construction of Large, Welded, Low-Pressure Storage Tanks*
   (b) API 650, *Standard for Welded Steel Tanks for Oil Storage*
(3) Open-top or covered floating-roof tanks are recommended to minimize possible fires and explosions and to reduce combustible vapor losses, particularly where the flash point is below 37.8°C (100°F). In fixed-roof tanks, the internal space above the liquid could contain an explosive vapor when in crude oil service. For protection, a fixed-roof tank can be provided with an internal cover floating on the oil, and the space between the cover and the roof can be vented adequately in accordance with API 650, Annex H. Spacing and fire protection are based on fixed-roof tank requirements *(see also API RP 2003, Recommended Practice for Protection Against Ignitions Arising Out of Static, Lightning, and Stray Currents, subsection 3.5.1)*. Existing fixed-roof tanks without internal floating covers can be permitted to be inert-gas blanketed if the flash point could be below 37.8°C (100°F).Tanks should be spaced and storage areas graded, drained, and diked in accordance with NFPA 30, *Flammable and Combustible Liquids Code*, to contain spills in the event of tank rupture or overflow.

Copyright 2014 National Fire Protection Association (NFPA). Licensed, by agreement, for individual use and download on October 4, 2014 to LEADER and READER for designated user PATTARAPORN SRITRAKOOL. No other reproduction or transmission in any form permitted without written permission of NFPA. For inquires or to report unauthorized use, contact licensing@nfpa.org.

(4) Plant layout and tank location should include consideration of boilover hazards, particularly with fixed-roof tanks. Diking is not a complete protection against the boilover fire phenomenon. Therefore, adequate fire protection and provisions for emergency flow paths should be included.
(5) Consideration should be given to agitation or other means to prevent settling of sludge in crude oil storage tanks.
(6) Piping and valves for crude oil should be of steel. Items such as steel-cased pumps and strainers are recommended to resist possible fire damage and release of fuel into the flames.
(7) Pump selection criteria should include consideration of oil vapor pressure, abrasive and corrosive contaminants, mechanical shaft seals to minimize leakage, and lubricity of the oils. In particular, pump suction pressures need to be high enough to preclude vaporization and cavitation with the oils to be handled.
(8) Ignition sources should be minimized. All piping should be bonded and grounded in accordance with NFPA 77, *Recommended Practice on Static Electricity*.
(9) Consideration should be given to detecting and monitoring combustible gases in areas where they are likely to accumulate.
(10) Access to crude oil-handling areas should be restricted; smoking should be prohibited in designated locations. Work likely to involve flame or sparks, such as welding or burning, should be performed only after the area is checked for safety. Cutting and welding precautions should be in accordance with NFPA 51, *Standard for the Design and Installation of Oxygen–Fuel Gas Systems for Welding, Cutting, and Allied Processes*, and NFPA 51B, *Standard for Fire Prevention During Welding, Cutting, and Other Hot Work*. Each area is to be checked with a portable combustible gas tester before starting work that could involve possible flames or ignition sources.
(11) Where potential toxic gas hazards might exist, personnel protection is to be provided where personnel perform such tasks as cleaning strainers, replacing pumps, and gauging or sampling tanks. Appropriate operating procedures and personnel training are essential.

Annex L Personnel Hazards of Atmospheric Fluidized Bed Boilers

This annex is not a part of the requirements of this NFPA document but is included for informational purposes only.

L.1 Special Hazards in Fluidized Bed Combustion (FBC) Systems. A number of personnel hazards are associated with fluidized bed combustion. FBC boilers differ from conventional boilers in important features. Some of these differences can lead to special hazards, several of which are included in the following discussion. These hazards include large quantities of hot, solid materials, significant concentrations of reactive compounds in the solids, and hazardous gaseous species.

Extensive treatment of these special hazards is beyond the scope of this code. Because FBC technology is still relatively new, recognition of these hazards is warranted. The boiler manufacturer, the plant designer, and the operator have responsibility for mitigating these hazards to the extent practicable.

L.2 Hot Solids.

L.2.1 Description of Hazard. FBC systems contain large quantities of granular solids. A typical 100 MW_t (341 million Btu/hr) FBC boiler can contain as much as 91 metric tons (100 tons) of free-flowing solids at 815°C (1500°F) or higher. These hot solids can spill out of the furnace or other components because of equipment failures, poor design, or misoperation. There have been several such incidents in operating plants. In the event of uncontrolled hot-solid spills, personnel can be injured, equipment damaged, or both.

L.2.2 Recommendations. Recommendations are as follows:

(1) The designers of the boiler and related plant equipment should identify the potential sources of hot solids and associated hazards and make recommendations for personnel safety.
(2) The designer should give careful consideration to the selection of materials that come into direct contact with hot solids.
(3) Clean-out ports, fittings that might be used as clean-out ports, and spool pieces that might be removed for rodding out blockages should be positioned so that a sudden rush of hot solids does not lead to personnel injury. Components that are removable for maintenance when the plant is out of service but that should not be removed when the plant is in service because of the risk of hot spills should be marked clearly.
(4) Instrumentation and wiring needed for the safe operation of the plant should not be routed near potential sources of hot solids. If such routing is necessary, the wiring should be protected from the direct flow of the solids.
(5) Fuel lines should not be located near potential sources of hot solids. The fuel lines should be protected from the direct flow of the solids.
(6) Plant personnel should be trained in the potential sources of hot solids, associated hazards, and the corresponding safety procedures.
(7) Procedures should be developed for cleaning obstructions that provide safety to personnel and equipment. Protective clothing and eye protection should be provided for personnel who rod out obstructions.
(8) Components that might contain hot solids should be inspected frequently.
(9) Water-cooled screws have failed when suddenly flooded with hot bed material following the removal of an upstream blockage. The sudden transfer of large amounts of heat has resulted in overpressurizing the cooling water passages. The operators should be trained adequately and the systems designed with appropriate instrumentation, interlocks, and pressure relief devices to mitigate the risks associated with this type of event.
(10) An FBC system's furnace and connected components will contain substantial quantities of hot solids for some time after a master fuel trip (MFT). Personnel should be aware of and trained to deal with the following possible results:
    (a) Hot solids stored in a furnace-connected space may suddenly flow into another space. Care should be taken to ensure that personnel do not enter a furnace or connected space that could still contain hot solids or be connected to a space that contains hot solids.

Copyright 2014 National Fire Protection Association (NFPA). Licensed, by agreement, for individual use and download on October 4, 2014 to LEADER and READER for designated user PATTARAPORN SRITRAKOOL. No other reproduction or transmission in any form permitted without written permission of NFPA. For inquires or to report unauthorized use, contact licensing@nfpa.org.

(b) Solids stored in the cyclone or loop seal — for example, due to blockage — could suddenly be released and flow into another space when the blockage "fails" or the solids cool and their fluidization characteristics change.
(c) Operation of an FD fan, an ID fan, or other fans might not rapidly cool stored solids because the moving air could bypass the bulk of a heap of hot particles.
(d) While a surface could appear cool because of rapid heat loss due to radiation, the bulk of the heap could still be hot due to self-insulation. A large heap of solids could require many hours to cool to a safe temperature.
(e) Water might enter a body of hot solids from any of a number of sources, including a boiler tube leak. Water pouring onto the solids might not immediately wet the hot solids (much like a drop of water on a hot griddle). When the solids suddenly become "wet," rapid generation of steam (steam explosion) could occur. In the event of a steam explosion, hot solids could flow upward as well as in other directions.
(f) Large hot clinkers or hot refractory could suddenly be released from the cyclone and flow into the loop seal and connected spaces with the assistance of smaller fluidizable particles.

L.3 Lime.

L.3.1 Description of Hazard. Limestone is normally fed to fluidized bed boilers to reduce the emissions of sulfur dioxide. More limestone should be added to comply with emission limits than is theoretically needed to react with all the fuel's sulfur. A significant amount of the limestone is not converted to calcium sulfate and exists as calcium oxide, commonly referred to as quicklime. Where calcium oxide (CaO) is present in the solids, care should be used to prevent equipment damage or injury to personnel. CaO reacts with water or water vapor to generate heat and reacts with moisture on skin or eyes to cause chemical burns.

L.3.2 Recommendations. Recommendations are as follows:

(1) Where limestone is used as an initial bed charge, it is quickly calcined to CaO (quicklime) before a large fraction reacts to $CaSO_4$. In some instances where limestone has been used for the initial charge, personnel have experienced chemical burns when entering the furnace because the limestone had turned to quicklime. Because of the likelihood that, during initial plant start-ups, a number of plant problems necessitate that personnel enter the FBC, the boiler manufacturer should recommend that the initial charge of bed material comprise sand, coal ash, or other chemically inert material rather than limestone.
(2) Where three parts lime are wet with approximately one part water, the highest temperature is reached due to a chemical reaction. Where the reaction of pure, reactive lime occurs within a large volume (providing insulation), temperatures of about 315°C (600°F) can be reached. This temperature is sufficiently high to ignite paper, for example, which in turn could lead to a plant fire. Also, equipment designed for ambient temperature and pressure can fail when heated by a large lime-water reaction. Therefore, relevant plant components should be designed to perform safely at high temperatures, and means of avoiding pressure buildup should be provided. Provisions should be made for detecting high temperatures within tanks and other components.
(3) Waste-conditioning systems do mix FBC wastes with water. The designers of these components should be made aware of the likelihood and effects of lime-water reactions by the system integrator, normally an architect, an engineer, or the plant owner.
(4) While the plant is in service, lime-water reactions could occur in so-called dead zones due to the humidity in air or flue gas. These reactions might or might not lead to particularly high temperatures, but they often do lead to hard blockages. These blockages might disable safety instrumentation, ash removal systems, or other components. Designers should anticipate this problem and provide a means to detect the presence of blockages, especially in instrument lines, as well as a means to remove blockages safely.
(5) The safety equipment necessary for dealing with lime should be provided, including breathing masks, protective clothing, and eye protection. First-aid facilities for chemical burns, especially of eyes, should be provided. Operators should be trained to test for the presence of quicklime before entering an enclosure filled with solids. One simple test can be performed by sampling the solids. The sample is placed in a metal (not glass) container by a person wearing gloves and eye protection. An approximately equal volume of water is added, the solution is stirred, and approximately 15 minutes is allowed to pass in order to detect a temperature rise.

L.4 Hydrogen Sulfide.

L.4.1 Description of Hazard. Fluidized bed boilers that operate substoichiometrically in the lower combustion zone can produce hydrogen sulfide (H_2S) as an intermediate product before the sulfur is fully oxidized. Because of the positive pressure in the lower combustion zone, H_2S can leak out of the furnace and into an area where personnel are working. Hydrogen sulfide is heavier than air and concentrates in poorly ventilated low points in the plant, creating the potential for personnel injury.

L.4.2 Recommendations. Recommendations are as follows:

(1) Adequate seals or gaskets on components that can be opened or disassembled and that are located in the dense bed region should be provided. Weld components that do not need to be opened or disassembled should be sealed.
(2) Written guidelines on H_2S should be provided with the equipment manuals.
(3) Operators should be trained to anticipate the presence of H_2S.
(4) Means for measuring the concentration of H_2S in the boiler house and other plant facilities should be provided.

L.5 Calcium Sulfide.

L.5.1 Description of Hazard. The bottom ash (and under some modes of misoperation, fly ash) from a fluidized bed boiler could contain some calcium sulfide, which is a reaction product of H_2S with limestone in the absence of sufficient oxygen. Calcium sulfide can react with CO_2 and H_2O, which are constituents of air, and release H_2S. If this occurs in a waste storage silo, for example, the silo's environment can reach a hazardous concentration of H_2S.

L.5.2 Recommendations. Recommendations are as follows:

(1) Operators should be trained for the possibility that calcium sulfide in FBC waste products could lead to the release of H_2S in waste storage silos and piles.
(2) Operators should be trained in the proper procedures for entry of enclosed spaces.

Copyright 2014 National Fire Protection Association (NFPA). Licensed, by agreement, for individual use and download on October 4, 2014 to LEADER and READER for designated user PATTARAPORN SRITRAKOOL. No other reproduction or transmission in any form permitted without written permission of NFPA. For inquires or to report unauthorized use, contact licensing@nfpa.org.

Annex M Origin and Development of NFPA 85

This annex is not a part of the requirements of this NFPA document but is included for informational purposes only.

M.1 Development of Code. Figure M.1 and Table M.1 are provided to assist users to better understand the complex development of NFPA 85.

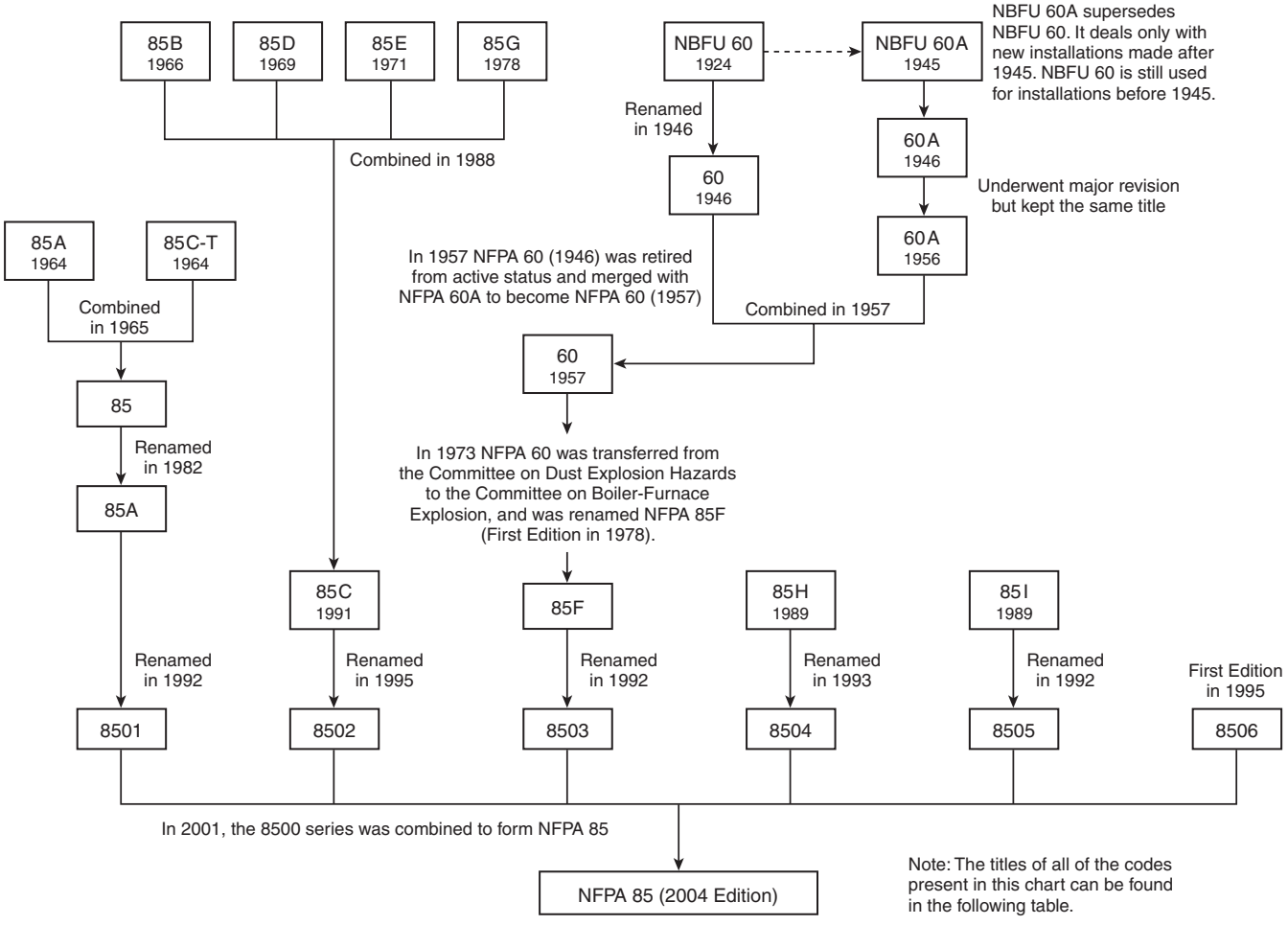

FIGURE M.1 Origin and Development of NFPA 85, *Boiler and Combustion Systems Hazards Code.*

Copyright 2014 National Fire Protection Association (NFPA). Licensed, by agreement, for individual use and download on October 4, 2014 to LEADER and READER for designated user PATTARAPORN SRITRAKOOL. No other reproduction or transmission in any form permitted without written permission of NFPA. For inquires or to report unauthorized use, contact licensing@nfpa.org.

Table M.1 Full Titles of NFPA Codes Given in Figure M.1

NFPA Code	Title
85A (1964)	*Prevention of Furnace Explosions in Natural Gas-Fired Watertube Boiler-Furnaces with One Burner*
85C-T (1964)	*Tentative Standard for Prevention of Furnace Explosions in Fuel Oil-Fired Watertube Boiler-Furnaces with One Burner*
85 (1965)	*Explosion Prevention Watertube Boiler-Furnaces Oil or Gas-Fired (Single Burner)*
85A (1982)	*Explosion Prevention Single Burner Boiler-Furnaces Oil- or Gas-Fired or Simultaneous Firing of Oil and Gas*
8501 (1992)	*Single Burner Boiler Operation*
85B (1966)	*Explosion Prevention Public Utility Boiler-Furnaces Gas-Fired*
85D (1969)	*Explosion Prevention Multiple Burner Boiler-Furnaces Fuel Oil-Fired*
85E (1971)	*Explosion Prevention Multiple Burner Boiler-Furnaces Pulverized Coal-Fired*
85G (1978)	*Prevention of Furnace Implosions in Multiple Burner Boiler-Furnaces*
85C (1991)	*Prevention of Furnace Explosions/Implosions in Multiple Burner Boiler-Furnaces*
8502 (1995)	*Standard for the Prevention of Furnace Explosions/Implosions in Multiple Burner Boilers*
NBFU 60 (1924)	*Regulations of the National Board of Fire Underwriters for the Installations of Pulverized Fuel Systems as Recommended by the National Fire Protection Association*
NBFU 60A (1945)	*Standards of the National Board of Fire Underwriters for the Installation of Pulverized Coal Systems as Recommended by the National Fire Protection Association*
NFPA 60A (1946)	*Code for the Installation and Operation of Pulverized-Coal Systems*
NFPA 60 (1946)	*Code for the Installation of Pulverized Fuel Systems*
NFPA 60A (1956)	*Code for the Installation and Operation of Pulverized Coal Systems*
NFPA 60 (1957)	*Standard for the Installation and Operation of Pulverized-Fuel Systems*
85F (1978)	*Installation and Operations of Pulverized Fuel Systems*
8503 (1992)	*Pulverized Fuel Systems*
85H (1989)	*Prevention of Combustion Hazards in Atmospheric Fluidized Bed Combustion System Boilers*
8504 (1993)	*Atmospheric Fluidized-Bed Boiler Operation*
85I (1989)	*Stoker Operation*
8505 (1992)	*Stoker Operation*
8506 (1995)	*Standard on Heat Recovery Steam Generator Systems*
85	*Boiler and Combustion Systems Hazards*

Annex N Informational References

N.1 Referenced Publications. The documents or portions thereof listed in this annex are referenced within the informational sections of this code and are not part of the requirements of this document unless also listed in Chapter 2 for other reasons.

N.1.1 NFPA Publications. National Fire Protection Association, 1 Batterymarch Park, Quincy, MA 02169-7471.

NFPA 30, *Flammable and Combustible Liquids Code*, 2008 edition.

NFPA 31,*Standard for the Installation of Oil-Burning Equipment*, 2006 edition.

NFPA 51, *Standard for the Design and Installation of Oxygen–Fuel Gas Systems for Welding, Cutting, and Allied Processes*, 2007 edition.

NFPA 51B, *Standard for Fire Prevention During Welding, Cutting, and Other Hot Work*, 2009 edition.

NFPA 54, *National Fuel Gas Code*, 2009 edition.

NFPA 58, *Liquefied Petroleum Gas Code*, 2008 edition.

NFPA 68, *Standard on Explosion Protection by Deflagration Venting*, 2007 edition.

NFPA 69, *Standard on Explosion Prevention Systems*, 2008 edition.

NFPA 70®, National Electrical Code®, 2008 edition.

NFPA 77, *Recommended Practice on Static Electricity*, 2007 edition.

NFPA 241, *Standard for Safeguarding Construction, Alteration, and Demolition Operations*, 2009 edition.

NFPA 497, *Recommended Practice for the Classification of Flammable Liquids, Gases, or Vapors and of Hazardous (Classified) Locations for Electrical Installations in Chemical Process Areas*, 2008 edition.

NFPA 499, *Recommended Practice for the Classification of Combustible Dusts and of Hazardous (Classified) Locations for Electrical Installations in Chemical Process Areas*, 2008 edition.

NFPA 850, *Recommended Practice for Fire Protection for Electric Generating Plants and High Voltage Direct Current Converter Stations*, 2010 edition.

N.1.2 Other Publications.

N.1.2.1 ABMA Publications. American Boiler Manufacturers Association, 4001 N. 9th Street, Suite 226, Arlington, VA 22203-1900.

ABMA 203, *A Guide to Clean and Efficient Operation of Coal-Stoker-Fired Boilers*, 2002.

ABMA 307, *Combustion Control Guidelines for Single Burner Firetube and Watertube Industrial/Commercial/Institutional Boilers*, 1999.

N.1.2.2 API Publications. American Petroleum Institute, 1220 L Street, NW, Washington, DC 20005-4070.

API 620, *Standard for Design and Construction of Large, Welded, Low-Pressure Storage Tanks*, 2009.

API 650, *Standard for Welded Steel Tanks for Oil Storage*, 2008.

API RP 500, *Recommended Practice for Classification of Locations for Electrical Installations at Petroleum Facilities Classified as Class I, Division 1 and Division 2*, 1998 (reaffirmed 2002).

API RP 505, *Recommended Practice for Classification of Locations for Electrical Installations at Petroleum Facilities Classified as Class I, Zone 0, Zone 1, and Zone 2*, 1997 (reaffirmed 2002).

API RP 2003, *Recommended Practice for Protection Against Ignitions Arising Out of Static, Lightning, and Stray Currents*, 2008.

Copyright 2014 National Fire Protection Association (NFPA). Licensed, by agreement, for individual use and download on October 4, 2014 to LEADER and READER for designated user PATTARAPORN SRITRAKOOL. No other reproduction or transmission in any form permitted without written permission of NFPA. For inquires or to report unauthorized use, contact licensing@nfpa.org.

N.1.2.3 ASME Publications. American Society of Mechanical Engineers, Three Park Avenue, New York, NY 10016-5990.

ASME *Boiler and Pressure Vessel Code*, 2007.

N.1.2.4 ASTM Publications. ASTM International, 100 Barr Harbor Drive, P.O. Box C700, West Conshohocken, PA 19428-2959.

ASTM D 396, *Standard Specification for Fuel Oils*, 2009.

N.1.2.5 ISA Publications. International Society of Automation, 67 Alexander Drive, Research Triangle Park, NC 27709.

ANSI/ISA 77.41.01, *Fossil Fuel Power Plant Boiler Combustion Controls,* 2005.

ANSI/ISA 77.42.01, *Fossil Fuel Power Plant Feedwater Control System — Drum Type,* 1999 (R2006).

ANSI/ISA 77.43.01, *Fossil Fuel Power Plant Unit/Plant Demand Development — Drum Type,* 2002 (R2008).

ANSI/ISA 77.44.01, *Fossil Fuel Power Plant — Steam Temperature Controls,* 2007.

N.2 Informational References. The following documents or portions thereof are listed here as informational resources only. They are not a part of the requirements of this document.

N.2.1 Additional HRSG References. The following documents provide additional information on iron fires.

Johnson, A. A., J. A. Von Franuhofer, and E. W. Jannett,"Combustion of Finned Steel Tubing During Stress Relief Heat Treatment," *Journal of Heat Treating*, Vol. 4, No. 3, June 1986, pp. 265–271.

McDonald, C. F., "The Potential Danger of Fire in Gas Turbine Heat Exchangers," ASME 69-GT-38.

Theoclitus, G., "Heat Exchanger Fires and the Ignition of Solid Metals," *Journal of Engineering for Gas Turbines and Power*, Vol. 107, July 1985, pp. 607–612.

N.3 References for Extracts in Informational Sections. (Reserved)

Copyright 2014 National Fire Protection Association (NFPA). Licensed, by agreement, for individual use and download on October 4, 2014 to LEADER and READER for designated user PATTARAPORN SRITRAKOOL. No other reproduction or transmission in any form permitted without written permission of NFPA. For inquires or to report unauthorized use, contact licensing@nfpa.org.

Index

Copyright © 2010 National Fire Protection Association. All Rights Reserved.

The copyright in this index is separate and distinct from the copyright in the document that it indexes. The licensing provisions set forth for the document are not applicable to this index. This index may not be reproduced in whole or in part by any means without the express written permission of NFPA.

-A-

Administration ..... Chap. 1
Application 1.3
Enforcement 1.6
Equivalency 1.5
Purpose 1.2
Retroactivity 1.4, A.1.4
Scope 1.1, A.1.1
Agglomerating
Definition 3.3.1
Agglomeration
Definition 3.3.2
Air
Auxiliary Air
Definition 3.3.3.1
Combustion Air
Definition 3.3.3.2
Definition 3.3.3
Design Full Load Mass Airflow
Definition 3.3.3.3
Excess Air
Definition 3.3.3.4, A.3.3.3.4
Overfire Air
Definition 3.3.3.5
Primary Air
Definition 3.3.3.6
Pulverizer Air
Definition 3.3.3.7
Seal Air
Definition 3.3.3.8
Secondary Air
Definition 3.3.3.9
Tempering Air
Definition 3.3.3.10
Theoretical Air
Definition 3.3.3.11
Transport Air
Definition 3.3.3.12
Undergrate Air
Definition 3.3.3.13
Air Change
Definition 3.3.4
Air-Rich
Definition 3.3.5
Alarm
Definition 3.3.6
Alteration
Definition 3.3.7
Annunciator
Definition 3.3.8
Approved
Definition 3.2.1, A.3.2.1
Atmospheric Fluidized Bed Boilers ..... Chap. 7
Alarm System 7.10
Functional Requirements 7.10.1, A.7.10.1
Required Alarms 7.10.2
Fuel Gas 7.10.2.2, A.7.10.2.2
Fuel Oil 7.10.2.3, A.7.10.2.3
General 7.10.2.1, A.7.10.2.1
Solid Fuel 7.10.2.4
Application 7.1
Equipment Requirements 7.4
Burner Management, Combustion Monitoring and Tripping, and Bed Temperature Monitoring 7.4.4
Bed Temperature Monitoring 7.4.4.3, A.7.4.4.3
Burner Management System 7.4.4.1
Combustion Control System 7.4.4.4
Functional Requirements 7.4.4.4.1
System Requirements 7.4.4.4.2
Combustion Monitoring and Tripping Systems — Functional Requirements 7.4.4.2
Operating Information 7.4.4.5
Fuel-Burning System 7.4.2
System Requirements 7.4.2.1
Structural Design 7.4.1
Boiler Enclosure 7.4.1.1
Solid Material Feed Systems 7.4.1.2
Warm-Up Burners and Lances 7.4.3
Burner Testing 7.4.3.8, A.7.4.3.8
Combustion Control System 7.4.3.6
Flame Detection 7.4.3.5
Flame Monitoring and Tripping 7.4.3.4
Flame Detection 7.4.3.4.2
Functional Requirements 7.4.3.4.1
Fuel Supply Subsystem — Gas 7.4.3.1
External Hazards 7.4.3.1.5
Fuel Supply Equipment 7.4.3.1.1
Leak Testing 7.4.3.1.11
Overpressure Protection 7.4.3.1.2
Safety Shutoff Valve for Burner or Lance 7.4.3.1.8
Safety Shutoff Valves for Igniters 7.4.3.1.10
Fuel Supply Subsystem — Fuel Oil 7.4.3.2
Discharge Means 7.4.3.2.10
Fuel Supply Equipment 7.4.3.2.1
Leak Testing 7.4.3.2.15
Recirculation 7.4.3.2.18
Safety Shutoff Valves for Burner or Lance 7.4.3.2.11
Lance Subsystem 7.4.3.7
Functional Requirements 7.4.3.7.1
Subsystem Requirements 7.4.3.7.2
Warm-Up Burner Subsystem 7.4.3.3
General 7.4.3.3.1
Subsystem Requirements 7.4.3.3.2
Furnace Pressure Excursion Prevention 7.5, A.7.5
Furnace Pressure Control Systems 7.5.2
Functional Requirements 7.5.2.1
Furnace Pressure Control Final Control Elements 7.5.2.3
System Requirements 7.5.2.2
General 7.5.1, A.7.5.1
Interlock System 7.5.4
Functional Requirements 7.5.4.1
System Requirements 7.5.4.2
Sequence of Operations 7.5.3
Functional Requirements 7.5.3.1
General 7.5.3.1.1
Open Flow Path 7.5.3.1.2
General 7.3
Combustion Explosions 7.3.1, A.7.3.1
Fluidized Bed Combustion — Special Problems 7.3.3
Additional Special Problems in Fluidized-Bed Combustion Systems 7.3.3.9
Bed Ignition Temperature 7.3.3.6
Char Carryover 7.3.3.2, A.7.3.3.2
Coal Firing 7.3.3.3

Copyright 2014 National Fire Protection Association (NFPA). Licensed, by agreement, for individual use and download on October 4, 2014 to LEADER and READER for designated user PATTARAPORN SRITRAKOOL. No other reproduction or transmission in any form permitted without written permission of NFPA. For inquires or to report unauthorized use, contact licensing@nfpa.org.

Heating the Bed 7.3.3.1
Hot Bed Material 7.3.3.7
Personnel Hazards 7.3.3.8
Solid Fuels 7.3.3.4
Waste Fuel Firing 7.3.3.5
Furnace Implosions 7.3.2, A.7.3.2
Interlock System 7.9
Functional Requirements 7.9.2
Adjustment of Initiating Devices 7.9.2.5
General 7.9.1
System Requirements 7.9.3
General 7.9.3.1
Lances 7.9.3.5
Lance Fuel Pressure 7.9.3.5.4
Master Fuel Trip Logic 7.9.3.2
Solid Fuel 7.9.3.6
Unit Purge 7.9.3.3
Warm-Up Burners 7.9.3.4, A.7.9.3.4
Purpose 7.2
Sequence of Operations 7.6
Emergency Conditions Not Requiring Shutdown or Trip 7.6.3
General 7.6.1
General Operating Requirements — All Conditions 7.6.4
Ignition 7.6.4.2
Total Heat Input 7.6.4.4
Operational Requirements 7.6.2
After Emergency Shutdown 7.6.2.9
Cold Start 7.6.2.1
Starting Sequence 7.6.2.1.2
Emergency Shutdown — Master Fuel Trip 7.6.2.5
Actions Following a Master Fuel Trip 7.6.2.5.5
Actions upon Initiating a Master Fuel Trip 7.6.2.5.4
Conditions Resulting in Mandatory Automatic Master Fuel Trips 7.6.2.5.2
Conditions Resulting in Mandatory Master Fuel Trips with Alarms — Not Necessarily Automatically Initiated 7.6.2.5.3
Emergency Shutdown — Main Fuel Trip 7.6.2.6
Conditions That Result in Mandatory Automatic Main Fuel Trips 7.6.2.6.2
Mandatory Main Fuel Trips — Not Necessarily Automatically Initiated 7.6.2.6.3
Loss of Draft Fans 7.6.2.8
Normal Hot Restart 7.6.2.4
Normal Operation 7.6.2.2
Airflow 7.6.2.2.6
Bed Temperature 7.6.2.2.5, A.7.6.2.2.5
Firing Rate 7.6.2.2.1
Normal Shutdown 7.6.2.3
Procedure for Purging after a Master Fuel Trip 7.6.2.7
Sequence of Operations for Gas-Fired Warm-Up Burners 7.7
Flame Monitoring and Tripping System 7.7.4
Fuel Supply Subsystem — Fuel Gas 7.7.2
General 7.7.1
Requirements for Fuel Gas Warm-Up Burner Subsystem 7.7.3
Maintenance and Housekeeping 7.7.3.5
Stable Flame Limits 7.7.3.1, A.7.7.3.1
Sequence of Operations 7.7.5
Emergency Conditions Not Requiring Shutdown or Trip 7.7.5.4
Functional Requirements 7.7.5.2
Cold Start 7.7.5.2.1
Normal Operation 7.7.5.2.2
Normal Shutdown 7.7.5.2.3
General 7.7.5.1
Burner Operation 7.7.5.1.2
Burner Testing 7.7.5.1.3
General Operating Requirements — All Conditions 7.7.5.5
Ignition 7.7.5.5.1
Mandatory Automatic Fuel Trip for Gas-Fired Warm-Up Burners 7.7.5.3
Sequence of Operations for Oil-Fired Warm-Up Burners 7.8
Flame Monitoring and Tripping System 7.8.4
Fuel Supply Subsystem — Fuel Oil 7.8.2
General 7.8.1
Requirements for Fuel Oil Warm-Up Burner Subsystem 7.8.3
Atomizing Subsystem 7.8.3.8
Contamination 7.8.3.8.4
Maintenance 7.8.3.6
Stable Flame Limits 7.8.3.1, A.7.8.3.1
Sequence of Operations 7.8.5
Emergency Conditions Not Requiring Shutdown or Trip 7.8.5.4
Functional Requirements 7.8.5.2
Cold Start 7.8.5.2.1
Normal Operation 7.8.5.2.2
Normal Shutdown 7.8.5.2.3
General 7.8.5.1
Burner Operation 7.8.5.1.2
Burner Testing 7.8.5.1.3
General Operating Requirements — All Conditions 7.8.5.5
Ignition 7.8.5.5.1
Mandatory Automatic Fuel Trip for Oil-Fired Warm-Up Burners 7.8.5.3

Atmospheric Fluidized-Bed Combustion
Definition 3.3.9
Atomizer
Definition 3.3.10
Mechanical Atomizer
Definition 3.3.10.1
Atomizing Medium
Definition 3.3.11
Augmented Air Firing
Definition 3.3.12
Authority Having Jurisdiction (AHJ)
Definition 3.2.2, A.3.2.2
Autoignition Temperature (AIT)
Definition 3.3.13, A.3.3.13

-B-

Bed Compartments
Definition 3.3.14
Bed Drain
Definition 3.3.15
Bed Material
Definition 3.3.16
Bed Temperature
Definition 3.3.17
Bin
Definition 3.3.18
Bin System (Storage System)
Definition 3.3.19
Boiler
Definition 3.3.20
Boiler Enclosure
Definition 3.3.21
Bottom Air Admission
Definition 3.3.22
Bubbling Fluidized Bed (BFB)
Definition 3.3.23
Bunker
Definition 3.3.24
Burner
Auxiliary Load-Carrying Burner
Definition 3.3.25.1
Definition 3.3.25
Duct Burner
Definition 3.3.25.2, A.3.3.25.2

Copyright 2014 National Fire Protection Association (NFPA). Licensed, by agreement, for individual use and download on October 4, 2014 to LEADER and READER for designated user PATTARAPORN SRITRAKOOL. No other reproduction or transmission in any form permitted without written permission of NFPA. For inquires or to report unauthorized use, contact licensing@nfpa.org.

Over Bed Burner
Definition 3.3.25.3
Warm-Up Burner (Warm-Up Gun)
Definition 3.3.25.4
Burner Management System
Automatic Burner Management System — Recycling
Definition 3.3.26.2
Automatic Burner Management System — Nonrecycling
Definition 3.3.26.1
Definition 3.3.26, A.3.3.26
Manual Burner Management System
Definition 3.3.26.3
Manual, Supervised Burner Management System
Definition 3.3.26.4
Bypass Stack
Definition 3.3.27

-C-

Calcination
Definition 3.3.28
Calcium to Sulfur Molar Ratio (Ca/S)
Definition 3.3.29
Char
Definition 3.3.30
Cinder Return
Definition 3.3.31
Circulating Fluidized Bed (CFB)
Definition 3.3.32
Classifier
Definition 3.3.33
Coal
Definition 3.3.34
Code
Definition 3.2.3, A.3.2.3
Coking Plate
Definition 3.3.35
Combustion Chamber
Definition 3.3.36
Combustion Turbine
Definition 3.3.37
Combustion Turbine Exhaust Systems
Definition 3.3.38, A.3.3.38
Combustion Turbine Runback
Definition 3.3.39
Commercial Operation
Definition 3.3.40
Commissioning
Definition 3.3.41
Confined Space
Definition 3.3.42
Continuous Trend Display
Definition 3.3.43
Control System
Boiler Control System
Definition 3.3.44.1
Combustion Control System
Definition 3.3.44.2
Definition 3.3.44
HRSG Control System
Definition 3.3.44.3
Start-Up Combustion Control System
Definition 3.3.44.4
Crusher
Definition 3.3.45

-D-

Damper
Definition 3.3.46
Shutoff Damper
Definition 3.3.46.1
Definitions ..... Chap. 3
Design Full Load Mass Airflow
Definition 3.3.47
Direct Fired System (Unit System)
Definition 3.3.48
Directional Blocking
Definition 3.3.49
Distributor/Divider
Definition 3.3.50
Drag Seal
Definition 3.3.51
Drip Leg
Definition 3.3.52
Dump Plate
Definition 3.3.53
Dust Collector
Definition 3.3.54

-E-

Elutriation
Definition 3.3.55
Exhauster
Definition 3.3.56
Explanatory Material ..... Annex A
Explosion Vent
Definition 3.3.57
Explosive Mixture
Definition 3.3.58

-F-

False Start
Definition 3.3.59
Fan
Booster Fan
Definition 3.3.60.1
Definition 3.3.60
Exhauster Fan
Definition 3.3.60.2
Forced Draft (FD) Fan
Definition 3.3.60.3
Induced Draft (ID) Fan
Definition 3.3.60.4
Primary Air Fan
Definition 3.3.60.5
Seal Air Fan
Definition 3.3.60.6
Fan Override Action
Definition 3.3.61
Fan Test Block Capability
Definition 3.3.62
Feed-Forward Signal
Definition 3.3.63
Flame
Definition 3.3.64
Flame Detector
Definition 3.3.65
Self-Checking Flame Detector
Definition 3.3.65.1
Flame Envelope
Definition 3.3.66
Fluidize
Definition 3.3.67
Fluidized Bed
Definition 3.3.68
Fly Carbon Reinjection
Definition 3.3.69
Freeboard
Definition 3.3.70
Fresh Air Firing
Definition 3.3.71

Copyright 2014 National Fire Protection Association (NFPA). Licensed, by agreement, for individual use and download on October 4, 2014 to LEADER and READER for designated user PATTARAPORN SRITRAKOOL. No other reproduction or transmission in any form permitted without written permission of NFPA. For inquires or to report unauthorized use, contact licensing@nfpa.org.

Friability
Definition 3.3.72
Fuel
Auxiliary Fuel
Definition 3.3.73.1
Coal
Definition 3.3.73.2
Definition 3.3.73
Fuel Oil (Oil Fuel)
Definition 3.3.73.3
Hogged Fuel
Definition 3.3.73.4
JP4
Definition 3.3.73.5
Kerosene
Definition 3.3.73.6
LP-Gas
Definition 3.3.73.7
Main Fuel
Definition 3.3.73.8
Municipal Solid Waste (MSW)
Definition 3.3.73.9
Natural Gas
Definition 3.3.73.10
Pulverized Fuel
Definition 3.3.73.11
Refuse-Derived Fuel (RDF)
Definition 3.3.73.12
Supplementary Fuel
Definition 3.3.73.13
Fuel Gas (Gas Fuel)
Definition 3.3.74
Fuel Hazards ..... Annex K
Fuel Supply Subsystem 10.2.1.2.2
Fuel Trip
Definition 3.3.76
Fuel-Rich
Definition 3.3.75
Fundamentals ..... Chap. 4
Basic Operating Requirements 4.5
Burner Management System Logic 4.11, A.4.11
Circuit Devices 4.11.9
Documentation 4.11.10
Momentary Closing of Fuel Valves 4.11.8
Requirement for Independence 4.11.7, A.4.11.7
Combustion Control System 4.13, A.4.13
Additional Requirements 4.13.3
Automatic Control 4.13.3.3, A.4.13.3.3
Functional Requirements 4.13.1
System Requirements 4.13.2
Measurements 4.13.2.7
Coordination of Design, Construction, and Operation 4.3
Flame Monitoring and Tripping Systems 4.12
Flame Detection 4.12.3
Clean Air Supply 4.12.3.2
Flame Detector Sighting 4.12.3.1
Flame Proving 4.12.3.5
Reduced Emissions Control Effects 4.12.3.4, A.4.12.3.4
Self-Checking of Flame Detectors 4.12.3.3
Functional Requirements 4.12.1
System Objectives 4.12.2
Fuel System Piping 4.10
Flue Gas Path Auxiliary Systems — Fuel and Feedstock Piping 4.10.3, A.4.10.3
Fuel Gas Piping Systems 4.10.1
Fuel Oil Piping Systems 4.10.2
Functional Requirements of Fuel-Burning System 4.7
Air Supply Subsystem 4.7.5
Combustion Products Removal Subsystem 4.7.8
Compatibility 4.7.2
Enclosures 4.7.4
Fuel Supply Subsystem 4.7.6
Function 4.7.1
Ignition Subsystem 4.7.7, A.4.7.7
System Requirements 4.7.3
Gaseous Vent System Requirements 4.9
Manifolding of Vents 4.9.3
Installation and Commissioning 4.2
Maintenance, Inspection, Training, and Safety 4.4, A.4.4
Maintenance and Equipment Inspection 4.4.1
Training 4.4.2
Maintenance Training 4.4.2.2
Operator Training 4.4.2.1
Manufacture, Design, and Engineering 4.1, A.4.1
Multiple Boilers 4.8
Operating Information 4.15
Power Supplies 4.14
Selective Catalytic Reduction 4.16, A.4.16
Structural Design 4.6, A.4.6
Furnace
Definition 3.3.77
Furnace Subsystem 10.2.1.2.3, A.10.2.1.2.3

-G-

Gate (for Raw Fuel) (Silo Gate; Bunker Gate)
Definition 3.3.78
Grate
Bars or Keys Grate
Definition 3.3.79.1
Definition 3.3.79
Hand-Fired Grate
Definition 3.3.79.2
Grindability
Definition 3.3.80
Guidelines for Determining the Minimum Permitted Temperature for Feeding a Fuel into a Fluidized Bed ..... Annex H

-H-

Hardwired
Definition 3.3.81
Header
Definition 3.3.82
Heat Recovery Steam Generator (HRSG)
Definition 3.3.83
HRSG Enclosure
Definition 3.3.83.1
HRSG Purge
Definition 3.3.83.2
HRSG System
Definition 3.3.83.3
Heat Recovery Steam Generators and Other Combustion Turbine Exhaust Systems ..... Chap. 8
Application 8.1
Combustion Turbine and HRSG with Fresh Air Firing Capability 8.10, A.8.10
Controls, Monitoring, Alarms, and Interlocks 8.10.4
General 8.10.1, A.8.10.1
Operational Considerations 8.10.2
Purge 8.10.3
Purge Credit During Transfer from Combustion Turbine to Fresh Air 8.10.3.5
Purge Credit During Transfer from Fresh Air to Combustion Turbine 8.10.3.6
Combustion Turbine Exhaust Bypass Systems 8.9
Dampers 8.9.3
Damper System 8.9.3.2
General 8.9.1, A.8.9.1
Interlocks 8.9.5
Stack Closure Interlocks 8.9.5.1
Monitoring 8.9.4
Purge 8.9.2
Fired HRSG 8.9.2.2

Copyright 2014 National Fire Protection Association (NFPA). Licensed, by agreement, for individual use and download on October 4, 2014 to LEADER and READER for designated user PATTARAPORN SRITRAKOOL. No other reproduction or transmission in any form permitted without written permission of NFPA. For inquires or to report unauthorized use, contact licensing@nfpa.org.

Returning HRSG to Service 8.9.2.3, A.8.9.2.3
Unfired HRSG 8.9.2.1
Combustion Turbine Exhaust System 8.11
Selective Catalytic Reduction (SCR) Systems 8.11.3
Controls, Monitoring, Alarms, and Interlocks 8.7
Alarms 8.7.3
Functional Requirements 8.7.3.1
Audible and Visual Alarms 8.7.3.1.4
Defeating Alarms 8.7.3.1.3
Required Alarms 8.7.3.2
Additional Alarms for Gaseous Fuels 8.7.3.2.2
Additional Alarms for Liquid Fuels 8.7.3.2.3
General Alarms 8.7.3.2.1
Control Functions 8.7.1, A.8.7.1
Feedwater/Drum Level Control 8.7.1.3
Fuel Control 8.7.1.2
General 8.7.1.1
On-Line Maintenance 8.7.1.1.2
Interlocks 8.7.4
Duct Burner Master Fuel Trip 8.7.4.3
Flame Detection 8.7.4.2
Burner Supervision 8.7.4.2.1
Functional Requirements 8.7.4.1
Removal of Safety Interlock Device 8.7.4.1.4
Monitoring 8.7.2
Electrical 8.6
Voltages 8.6.1
Equipment 8.4
Combustion Turbine 8.4.2
Fuel Supply 8.4.2.1, A.8.4.2.1
Gaseous Fuels 8.4.2.1.2
Liquid Fuels 8.4.2.1.1
Interlocks 8.4.2.2, A.8.4.2.2
Operating Interfaces 8.4.2.3
General 8.4.1
HRSG Fuel-Burning System 8.4.3, A.8.4.3
Atomizing Media 8.4.3.3
Augmented Air 8.4.3.6, A.8.4.3.6
Fuel Supply 8.4.3.2
Additional Requirements for Gaseous Fuels 8.4.3.2.2
Additional Requirements for Liquid Fuel 8.4.3.2.3
General 8.4.3.2.1
Ignition 8.4.3.4
Maintenance 8.4.3.4.3
Introduction 8.4.3.1
Main Burner 8.4.3.5
Additional Burner Requirements for Liquid Fuel ... 8.4.3.5.2
Burner Elements 8.4.3.5.1
HRSG Enclosure and Other Combustion Turbine Exhaust Systems 8.5, A.8.5
Expansion 8.5.4, A.8.5.4
Fin-Metal Tube Fires 8.5.5, A.8.5.5
HRSG Implosions 8.5.3, A.8.5.3
Project Coordination 8.3
Design 8.3.3
General 8.3.1
Project Inception 8.3.2
Purge, Start-up, Operation, and Shutdown of HRSG and Other Combustion Turbine Exhaust Systems 8.8
Cold Start Preparation 8.8.3
Combustion Turbine Purge and Light-Off 8.8.4
Combustion Turbine Purge Credit 8.8.4.6, A.8.8.4.6
System 1 Gaseous Fuels 8.8.4.6.1, A.8.8.4.6.1
System 2 Gaseous Fuels with Pressurized Pipe Section 8.8.4.6.2, A.8.8.4.6.2
System 3 Liquid Fuels with Pressurized Pipe Section 8.8.4.6.3, A.8.8.4.6.3
Combustion Turbine Purge Process 8.8.4.1, A.8.8.4.1
Failure to Start 8.8.4.3
Initial Combustion Turbine Purge and Light-Off 8.8.4.2
Purge Rate 8.8.4.2.2
Purge Volume 8.8.4.2.1
Light-Off Airflow 8.8.4.4
Loading of Combustion Turbine 8.8.4.5
Duct Burner Emergency Shutdown 8.8.9
Gaseous Fuel 8.8.9.2
Liquid Fuel 8.8.9.3
Duct Burner Purge and Light-Off 8.8.5
Augmented Air System Purge 8.8.5.4
Duct Burner Purge Credit 8.8.5.6
Starting Sequence 8.8.5.8, A.8.8.5.8
Single Burner Operations 8.8.5.8.3
General 8.8.1, A.8.8.1
General Operating Requirements 8.8.2
Gaseous Fuel 8.8.2.4
Ignition 8.8.2.2
Liquid Fuel 8.8.2.5
Liquid Fuel — Scavenging of Liquid Fuel Burner Passages 8.8.2.6
Low Capacity Fuel Pressure 8.8.2.3
Prior to Starting 8.8.2.1
Sequencing 8.8.2.7
Placing Duct Burners into Service 8.8.2.7.3, A.8.8.2.7.3
Normal Hot Restart 8.8.8
Normal Operation 8.8.6
Normal Shutdown 8.8.7
Purpose 8.2
Hogged Fuel
Definition 3.3.84

-I-

Igniter
Class 1 Igniter
Definition 3.3.85.1
Class 2 Igniter
Definition 3.3.85.2
Class 3 Igniter
Definition 3.3.85.3
Class 3 Special Igniter
Definition 3.3.85.4
Definition 3.3.85
Industry Experience (Reserved) ..... Annex E
Inert Gas
Definition 3.3.86
Informational References ..... Annex N
Initial Operation
Definition 3.3.87
Interlock
Definition 3.3.88

-J-

JP4
Definition 3.3.89

-K-

Kerosene
Definition 3.3.90

-L-

Labeled
Definition 3.2.4
Lance
Definition 3.3.91
Ledge Plate
Definition 3.3.92
Light-Off Cycle 5.5.2.6.2, 5.5.4.2.2
Light-Off Time Limit Timer
Definition 3.3.93
Listed
Definition 3.2.5, A.3.2.5

Copyright 2014 National Fire Protection Association (NFPA). Licensed, by agreement, for individual use and download on October 4, 2014 to LEADER and READER for designated user PATTARAPORN SRITRAKOOL. No other reproduction or transmission in any form permitted without written permission of NFPA. For inquires or to report unauthorized use, contact licensing@nfpa.org.

Lock Hopper
Definition 3.3.94
Logic System
Definition 3.3.95
Low Fire
Definition 3.3.96
LP-Gas
Definition 3.3.97

-M-

Main Fuel Temperature Permit
Definition 3.3.98
Master Fuel Trip
Definition 3.3.99, A.3.3.99
Master Fuel Trip Relay
Definition 3.3.100
Minimum Fluidization Velocity
Definition 3.3.101
Modifications 7.6.1.5.2
Modulation 5.5.2.6.3, 5.5.4.2.3
Monitor
Definition 3.3.102
Multiple Burner Boiler Fundamental Principles of a Manual System ..... Annex C
Multiple Burner Boiler Low NOx Operation — Special Considerations ..... Annex D
Multiple Burner Boiler Supervised Manual Systems ..... Annex B
Multiple Burner Boilers ..... Chap. 6
Application 6.1
Burner Management and Combustion Control Requirements 6.4
Alarm System 6.4.3
Functional Requirements 6.4.3.1
Required Alarms 6.4.3.2, A.6.4.3.2
Atomizing Steam or Air Pressure (Low) 6.4.3.2.10
Axial Flow Fan Nearing Stall Line 6.4.3.2.27
Burner Valves Not Closed 6.4.3.2.23
Coal Stoppage to Pulverizer 6.4.3.2.13
Coal-Air High Temperature 6.4.3.2.14
Drum Water Level (Low) 6.4.3.2.24
Duct Burner Discharge Temperature (High) 6.4.3.2.41
Duct Burner Fuel Header Pressure (High and Low) 6.4.3.2.38
Duct Burner Igniter Fuel Header Pressure (High and Low) 6.4.3.2.40
Failure of Duct Burner Safety Shutoff Valve to Close 6.4.3.2.39
Failure of Reburn Safety Shutoff Valve to Close 6.4.3.2.29
Flue Gas Combustibles (High) 6.4.3.2.36
Fuel Gas Burner Header Pressure (High and Low) 6.4.3.2.6
Fuel Gas Meter Pressure (High and Low) 6.4.3.2.5
Fuel Gas Supply Pressure (High and Low) 6.4.3.2.4
Fuel Oil Burner Header Pressure (Low) 6.4.3.2.9
Furnace Airflow (Low) 6.4.3.2.19
Furnace Draft (High) 6.4.3.2.16
Furnace Pressure (High) 6.4.3.2.15
Furnace Temperature (Low) 6.4.3.2.37
Igniter Atomizing Steam or Air Pressure (Low) ... 6.4.3.2.3
Ignition Fuel Gas Header Pressure (High and Low) 6.4.3.2.1
Ignition Fuel Oil Header Pressure (Low) 6.4.3.2.2
Initiation of Directional Blocking or Override Action 6.4.3.2.25
Loss of Control Power 6.4.3.2.21
Loss of Flame 6.4.3.2.22
Loss of Interlock Power 6.4.3.2.20
Loss of Operating FD Fan 6.4.3.2.17
Loss of Operating ID Fan 6.4.3.2.18
Main Fuel Oil Viscosity (High) 6.4.3.2.8
Main Oil Supply Pressure (Low) 6.4.3.2.7
Primary Air Fan Tripped 6.4.3.2.12
Pulverizer Tripped 6.4.3.2.11
Reburn Atomizing Steam or Air Pressure Low ... 6.4.3.2.32
Reburn Fuel (Coal) Preparation System Fault ... 6.4.3.2.35
Reburn Fuel (Coal) Transport Flow (Low) 6.4.3.2.33
Reburn Fuel (Coal) Transport Temperature (High) 6.4.3.2.34
Reburn Fuel Gas Pressure (High and Low) 6.4.3.2.28
Reburn Fuel Oil Supply Pressure Low 6.4.3.2.30
Reburn Fuel Oil Temperature Low 6.4.3.2.31
Redundant Transmitter Malfunctions 6.4.3.2.26
Interlock System 6.4.2
Functional Requirements 6.4.2.2
General 6.4.2.1
Required Interlocks 6.4.2.3
Interlock System 6.4.2.3.1, A.6.4.2.3.1
Interlocks and Trips for Duct Burners 6.4.2.3.12
Interlocks and Trips for Flue Gas Path Auxiliary Systems 6.4.2.3.13
Interlocks and Trips for Reburn Fuel 6.4.2.3.10
Interlocks and Trips for Selective Catalytic Reduction (SCR) 6.4.2.3.11, A.6.4.2.3.11
Loss of FD Fan Interlocks 6.4.2.3.7
Loss of ID Fan Interlocks 6.4.2.3.6
Multiple and Variable-Speed Fan Interlocks 6.4.2.3.8
Purge Requirements 6.4.2.3.4
Reserved 6.4.2.3.5
Trips and Interlocks for Individual Pulverizer Subsystem on Direct-Fired Furnaces 6.4.2.3.9
Unattended and Off-Site Operation 6.4.1, A.6.4.1
Fuel Gas Systems 6.6
Boiler Front Control (Supervised Manual) 6.6.6, A.6.6.6
Flame Monitoring and Tripping System 6.6.4
Igniters 6.6.4.1
Class 1 Igniters 6.6.4.1.1
Class 2 Igniters 6.6.4.1.2
Class 3 Igniters 6.6.4.1.3
Reburn System 6.6.4.4
Fuel Gas Firing — Special Problems 6.6.2
General 6.6.1
Operations 6.6.5
Emergency Conditions Not Requiring Shutdown or Trip 6.6.5.3
Functional Requirements 6.6.5.2
Cold Start 6.6.5.2.1
Duct Burner Emergency Shutdown 6.6.5.2.14
Duct Burner Normal Operation 6.6.5.2.12
Duct Burner Purge and Light-Off 6.6.5.2.10
Duct Burner Shutdown 6.6.5.2.13
Duct Burner Starting Sequence 6.6.5.2.11
Emergency Shutdown — Master Fuel Trip 6.6.5.2.5
Normal Hot Restart 6.6.5.2.4
Normal Operation 6.6.5.2.2
Normal Shutdown 6.6.5.2.3
Reburn System Start 6.6.5.2.8
Shutdown Sequence — Second Fuel 6.6.5.2.7
Shutdown Sequence — Reburn Fuel 6.6.5.2.9
Starting Sequence — Second Fuel 6.6.5.2.6
General Operating Requirements 6.6.5.1
All Conditions 6.6.5.1.1
Leak Test 6.6.5.1.3, A.6.6.5.1.3
Sequencing 6.6.5.1.5
Sootblowers 6.6.5.1.2
Total Heat Input 6.6.5.1.4
System Requirements 6.6.3
Augmented Air 6.6.3.7
Duct Burner Fuel Supply Subsystem — Fuel Gas 6.6.3.6
Flue Gas Recirculation to Burners 6.6.3.4
Fuel Supply Subsystem — Fuel Gas 6.6.3.1
Equipment Size and Arrangement 6.6.3.1.1
Fire and Mechanical Impact 6.6.3.1.9
Fuel Contamination 6.6.3.1.4

Copyright 2014 National Fire Protection Association (NFPA). Licensed, by agreement, for individual use and download on October 4, 2014 to LEADER and READER for designated user PATTARAPORN SRITRAKOOL. No other reproduction or transmission in any form permitted without written permission of NFPA. For inquires or to report unauthorized use, contact licensing@nfpa.org.

Fuel Gas Supply Overpressure Protection 6.6.3.1.2
Valve Leak Testing 6.6.3.1.11
Main Burner Subsystem 6.6.3.2
Maintenance 6.6.3.2.6, A.6.6.3.2.6
Reserved 6.6.3.2.5
Stable Flame Limits 6.6.3.2.1, A.6.6.3.2.1
Tests for Stable Flame Limits 6.6.3.2.2, A.6.6.3.2.2
Reburn Fuel Supply Subsystem — Fuel Gas 6.6.3.5
Furnace Temperature Tests 6.6.3.5.2
Reserved 6.6.3.3
Two-Burner Systems — Single Fuel Flow Control 6.6.7
Fuel Transfer Procedure 6.6.7.3
Fundamental Principles 6.6.7.1
System Requirements 6.6.7.2
Burner Light-Off Procedures 6.6.7.2.2
Fuel Oil Systems 6.7
Boiler Front Control (Supervised Manual) 6.7.6, A.6.7.6
Flame Monitoring and Tripping System 6.7.4
Reburn System 6.7.4.4
Fuel Oil Firing — Special Problems 6.7.2
General 6.7.1
Operations 6.7.5
Emergency Conditions Not Requiring Shutdown or Trip 6.7.5.3
Functional Requirements 6.7.5.2
Cold Start 6.7.5.2.1
Emergency Shutdown — Master Fuel Trip 6.7.5.2.5
Functional Requirements: Normal Hot Restart 6.7.5.2.4
Functional Requirements: Normal Operation 6.7.5.2.2
Functional Requirements: Normal Shutdown 6.7.5.2.3
Reburn System Start 6.7.5.2.8
Shutdown Sequence — Reburn Fuel 6.7.5.2.9
Shutdown Sequence — Second Fuel 6.7.5.2.7
Starting Sequence — Second Fuel 6.7.5.2.6
General Operating Requirements 6.7.5.1
All Conditions 6.7.5.1.1
Operational Leak Test 6.7.5.1.3, A.6.7.5.1.3
Sequencing 6.7.5.1.5
Sootblowers 6.7.5.1.2
Total Heat Input 6.7.5.1.4
System Requirements 6.7.3
Atomizing Subsystem 6.7.3.3
Flue Gas Recirculation to Burners 6.7.3.4
Fuel Supply Subsystem — Fuel Oil 6.7.3.1
Equipment Size and Arrangement 6.7.3.1.1
Fire and Mechanical Impact 6.7.3.1.9, A.6.7.3.1.9
Fuel Contamination 6.7.3.1.4
Fuel Oil Supply Overpressure Protection 6.7.3.1.2
Recirculation 6.7.3.1.12
Valve Leak Testing 6.7.3.1.11
Main Burner Subsystem 6.7.3.2
Additional Tests 6.7.3.2.3
Maintenance 6.7.3.2.6, A.6.7.3.2.6
Stable Flame Limits 6.7.3.2.1, A.6.7.3.2.1
Tests for Stable Flame Limits 6.7.3.2.2
Reburn Fuel Supply Subsystem — Fuel Oil 6.7.3.5
Temperature Test 6.7.3.5.2
Two-Burner Systems — Single Fuel Flow Control 6.7.7
Fuel Transfer Procedure 6.7.7.3
Fundamental Principles 6.7.7.1
System Requirements 6.7.7.2
Burner Light-Off Procedures 6.7.7.2.2
Furnace Implosion Protection 6.5
Furnace Pressure Control Systems (Implosion Protection) 6.5.2
Component Requirements 6.5.2.3
Functional Requirements 6.5.2.1
System Requirements 6.5.2.2
General 6.5.1, A.6.5.1
Balanced Draft Units 6.5.1.3, A.6.5.1.3
Pressure Fired Units 6.5.1.2
Transient Design Pressure 6.5.1.1
Interlock System Functional Requirements 6.5.4
Sequence of Operations Requirements 6.5.3
Open-Flow Air Path 6.5.3.2, A.6.5.3.2
Starting and Stopping Fans 6.5.3.3
Mechanical Equipment Requirements 6.3
Fuel Gas and Fuel Oil Safety Shutoff Valves 6.3.3
Pulverized Coal Systems 6.8
Coal Firing — Special Problems 6.8.2
Coal Burner Turndown Ratio 6.8.2.2
Effect of Turndown Ratio on Open Register Light-Off 6.8.2.3
Flame Monitoring and Tripping System 6.8.4
Flame Tripping Validation 6.8.4.4
Furnace Tripping 6.8.4.4.6
Monitoring with Automatic Tripping of Individual Burners or Burner Groups 6.8.4.4.4, A.6.8.4.4.4
Monitoring with Automatic Tripping of Individual Feeder or Pulverizer and Feeder 6.8.4.4.5
Reburn System 6.8.4.5
Reserved 6.8.4.2
General 6.8.1
Operations 6.8.5
Emergency Conditions Not Requiring Shutdown or Trip 6.8.5.3
Functional Requirements 6.8.5.2
Cold Start 6.8.5.2.1
Emergency Shutdown — Master Fuel Trip 6.8.5.2.5
Hazards of Residual Coal Charges in Pulverizers and Clearing After Shutdown 6.8.5.2.10
Normal Hot Restart 6.8.5.2.4
Normal Operation 6.8.5.2.2
Normal Shutdown 6.8.5.2.3
Reburn System Start 6.8.5.2.8
Shutdown Sequence — Second Fuel 6.8.5.2.7
Shutdown Sequence — Reburn Fuel 6.8.5.2.9
Starting Sequence — Second Fuel 6.8.5.2.6
General Operating Requirements 6.8.5.1
All Conditions 6.8.5.1.1
Reserved 6.8.5.1.3
Sequencing 6.8.5.1.5
Sootblowers 6.8.5.1.2
Total Heat Input 6.8.5.1.4
System Requirements 6.8.3
Flue Gas Recirculation to Burners 6.8.3.4
Fuel Supply Subsystem — Coal 6.8.3.1
Pulverizer Subsystems 6.8.3.1.2
Raw Coal Supply Subsystem 6.8.3.1.1
Main Burner Subsystem 6.8.3.2
Additional Tests 6.8.3.2.3
Maintenance 6.8.3.2.6, A.6.8.3.2.6
Stable Flame Limits 6.8.3.2.1, A.6.8.3.2.1
Tests for Stable Flame Limits 6.8.3.2.2
Reburn Fuel Supply Subsystem — Coal 6.8.3.5
Temperature Tests 6.8.3.5.2
Reserved 6.8.3.3
Purpose 6.2
Selective Catalytic Reduction (SCR) Systems with Bypass Capability 6.9, A.6.9

-N-

Natural Gas
Definition 3.3.103

-O-

Oil
Definition 3.3.104
Open Flow Path
Definition 3.3.105
Open Register Light-Off Procedure
Definition 3.3.106

Copyright 2014 National Fire Protection Association (NFPA). Licensed, by agreement, for individual use and download on October 4, 2014 to LEADER and READER for designated user PATTARAPORN SRITRAKOOL. No other reproduction or transmission in any form permitted without written permission of NFPA. For inquires or to report unauthorized use, contact licensing@nfpa.org.

Operating Range
Definition ... 3.3.107
Origin and Development of NFPA 85 ... Annex M
Overfire Air Port
Definition ... 3.3.108

-P-

Partial Loss of Flame
Definition ... 3.3.109
Personnel Hazards of Atmospheric Fluidized Bed Boilers ... Annex L
Positive Means
Definition ... 3.3.110
Postpurge
Definition ... 3.3.111
Pressure/Air Lock
Definition ... 3.3.112
Primary Air Fan (Pulverizer Air Fan)
Definition ... 3.3.113
Prove
Definition ... 3.3.114
Pulverized Fuel
Definition ... 3.3.115
Pulverized Fuel Pump
Definition ... 3.3.116
Pulverized Fuel Systems ... Chap. 9
Application ... 9.1
Design ... 9.4
Inerting Arrangement ... 9.4.4
Introduction ... 9.4.1
Piping Arrangement ... 9.4.3
Pipe Velocities ... 9.4.3.3
Pulverizer System Component Design Requirements ... 9.4.6
Bunker and Hopper Designs ... 9.4.6.5
Construction Materials for Pressure Containment ... 9.4.6.6
Electrical Equipment ... 9.4.6.7
Fire-Extinguishing System ... 9.4.6.9
Connections ... 9.4.6.9.1
Inerting System ... 9.4.6.8
Interconnections ... 9.4.6.4
Piping ... 9.4.6.2
Bend Radii ... 9.4.6.2.3
General ... 9.4.6.2.1
Wear ... 9.4.6.2.2
Strength of Equipment ... 9.4.6.1
Components ... 9.4.6.1.4
Inert Atmosphere ... 9.4.6.1.7
Noninert Atmosphere ... 9.4.6.1.8
Valves ... 9.4.6.3
Safety Interlock Systems ... 9.4.7
Permissive Sequential-Starting Interlocks ... 9.4.7.4
Permissive Sequential-Starting Interlocks ... 9.4.7.2
Trip Sequence of Interlocks ... 9.4.7.3
System Arrangement Requirements ... 9.4.2
System Arrangements ... 9.4.5
Direct-Fired Systems ... 9.4.5.1
Air Supply Isolation Requirements ... 9.4.5.1.3
Valve Requirements ... 9.4.5.1.2
Storage-Firing Systems ... 9.4.5.2
Primary Air Connections of Pressure Furnace Firing ... 9.4.5.2.3
Valve Requirements ... 9.4.5.2.2
Venting ... 9.4.5.2.4
General ... 9.3
Functional Requirements ... 9.3.1, A.9.3.1
Hazards in Pulverized Fuel Systems ... 9.3.2, A.9.3.2
Operation ... 9.5
Abnormal Pulverizer System Conditions ... 9.5.4
Fires in Pulverized Fuel Systems ... 9.5.4.3
Pulverizer Tripping ... 9.5.4.2
Fuel-Clearing Procedures ... 9.5.4.2.2
Inerting ... 9.5.4.2.1, 9.5.4.2.1.2
Operation of All Pulverized Fuel Systems ... 9.5.1
Preparation for Starting ... 9.5.1.1
Operation of Direct-Fired Systems ... 9.5.2
Normal Operation ... 9.5.2.2, A.9.5.2.2
Individual Burner Shutoff Valves ... 9.5.2.2.2
Normal Shutdown ... 9.5.2.3
Starting Sequence ... 9.5.2.1
Operation of Storage Systems ... 9.5.3
Operation of Fuel-Burning Equipment ... 9.5.3.1
Normal Operation ... 9.5.3.1.2
Normal Shutdown ... 9.5.3.1.3
Starting Sequence ... 9.5.3.1.1
Operation of Pulverizing Equipment of Storage Systems ... 9.5.3.2
Normal Shutdown ... 9.5.3.2.2
Starting Sequence ... 9.5.3.2.1
Purpose ... 9.2
Special Systems ... 9.6
Direct-Firing System for Rotary Kilns ... 9.6.4
Interlocking ... 9.6.4.3
Isolation Requirements ... 9.6.4.1
Operation ... 9.6.4.2
Normal Operation ... 9.6.4.2.2
Normal Shutdown ... 9.6.4.2.3
Starting Sequence ... 9.6.4.2.1
Introduction ... 9.6.1
Pulverized Fuel System for Blast Furnace Injection ... 9.6.3
Description ... 9.6.3.1
Interlocking ... 9.6.3.7
Isolation Requirements ... 9.6.3.4
Normal Shutdown ... 9.6.3.6
Operation ... 9.6.3.5
Operation of Fuel Pulverizing Equipment ... 9.6.3.5.2
System Arrangement ... 9.6.3.2
Valve Requirements ... 9.6.3.3
Dusttight Valves ... 9.6.3.3.2
Semi-Direct-Firing System ... 9.6.2
Description ... 9.6.2.1
Isolation Requirements ... 9.6.2.4
Operation ... 9.6.2.5
Interlocking ... 9.6.2.5.4
Normal Operation ... 9.6.2.5.2
Normal Shutdown ... 9.6.2.5.3
Starting Sequence ... 9.6.2.5.1
System Arrangement ... 9.6.2.2
Valve Requirements ... 9.6.2.3
Pulverizer
Definition ... 3.3.117
Purge
Combustion Turbine Purge
Definition ... 3.3.118.1
Combustion Turbine Purge Credit
Definition ... 3.3.118.2
Definition ... 3.3.118
Duct Burner (HRSG) Purge
Definition ... 3.3.118.3
Purge Rate
Definition ... 3.3.119

-R-

Raw Fuel Feeder
Definition ... 3.3.120
Reburn
Definition ... 3.3.121
Reburn Injector
Definition ... 3.3.122
Recirculation (Solids or Recycle)
Definition ... 3.3.123
Recycle
Definition ... 3.3.124

Copyright 2014 National Fire Protection Association (NFPA). Licensed, by agreement, for individual use and download on October 4, 2014 to LEADER and READER for designated user PATTARAPORN SRITRAKOOL. No other reproduction or transmission in any form permitted without written permission of NFPA. For inquires or to report unauthorized use, contact licensing@nfpa.org.

Recycle Rate
Definition ... 3.3.125
Recycle Ratio
Definition ... 3.3.126
Referenced Publications ... Chap. 2
General ... 2.1
NFPA Publications ... 2.2
Other Publications ... 2.3
References for Extracts in Mandatory Sections ... 2.4
Refuse-Derived Fuel (RDF)
Definition ... 3.3.127
Register (Burner Air)
Definition ... 3.3.128
Reinjection
Definition ... 3.3.129
Remote Operation
Definition ... 3.3.130
Repair
Definition ... 3.3.131
Repeatability
Definition ... 3.3.132
Restart
Definition ... 3.3.133
Retort
Definition ... 3.3.134

-S-

Safety ... Annex J
Safety Shutdown Trip Relay
Definition ... 3.3.135
Sample Ordinance Adopting NFPA 85 ... Annex I
Scavenging
Definition ... 3.3.136
Selective Catalytic Reduction (SCR)
Definition ... 3.3.137
Semifluidized
Definition ... 3.3.138
Service Connection
Definition ... 3.3.139
Set Point
Definition ... 3.3.140
Shall
Definition ... 3.2.6
Should
Definition ... 3.2.7
Shutdown
Combustion Turbine Normal Shutdown
Definition ... 3.3.141.1
Definition ... 3.3.141
Emergency Shutdown (HRSG or other combustion turbine exhaust systems)
Definition ... 3.3.141.2
Normal Shutdown
Definition ... 3.3.141.3
Safety Shutdown (Single Burner Boiler)
Definition ... 3.3.141.4
Side Air Admission
Definition ... 3.3.142
Single Burner Boilers ... Chap. 5
Application ... 5.1
Dual Oil Atomizers in a Single Burner ... 5.8
General ... 5.8.1, A.5.8.1
Oil Atomizer Changeover Procedure ... 5.8.3
Required Equipment ... 5.8.2
Equipment Requirements ... 5.3
Alternate Fuel Firing ... 5.3.3
Automatic Fuel Selection ... 5.3.3.2
Manual Fuel Selection ... 5.3.3.1
Combustion Control System ... 5.3.5, A.5.3.5
Electrical Equipment ... 5.3.8
Flame Safety Shutdown System ... 5.3.7
Fuel Supply — Oil ... 5.3.1, A.5.3.1
Oil Supply ... 5.3.1.8
Fuel Supply — Gas ... 5.3.2, A.5.3.2
Valve Leakage Test ... 5.3.2.7
Fuel-Burning Equipment ... 5.3.4
Atomizing Medium for Oil Burners ... 5.3.4.3
Combustion Air Supply ... 5.3.4.4
Combustion Products Removal ... 5.3.4.6
Furnace ... 5.3.4.5
Ignition ... 5.3.4.1, A.5.3.4.1
Igniter Safety Shutoff Valves ... 5.3.4.1.3, A.5.3.4.1.3
Main Burner ... 5.3.4.2
Gas and Oil Firing: Special Problems ... 5.3.9, A.5.3.9
Interlock System ... 5.3.6
Bypass ... 5.3.6.4
Safety Control dc Circuits ... 5.3.6.6
Operating Systems ... 5.5
Automatic (Nonrecycling) Systems for Firetube Boilers ... 5.5.5
Automatic (Nonrecycling) Systems for Watertube Boilers ... 5.5.3
Automatic (Recycling) Systems for Firetube Boilers ... 5.5.4
Automatic (Recycling) Systems for Watertube Boilers ... 5.5.2
General ... 5.5.1, A.5.5.1
Soot Blowing ... 5.5.8
Supervised Manual Systems for Gas-Fired Watertube Boilers ... 5.5.7
Supervised Manual Systems for Oil-Fired Watertube Boilers ... 5.5.6
Purpose ... 5.2
Simultaneous Firing of Oil and Gas for Fuel Transfer Only ... 5.7
General ... 5.7.1, A.5.7.1
Simultaneous Firing for Fuel Transfer on a Continuous Basis ... 5.7.1.1
Required Equipment ... 5.7.2
Safety Shutdowns ... 5.7.5
Simultaneous Firing of Oil and Gas for Fuel Transfer Only (Automated Transfer) ... 5.7.3
Required Equipment ... 5.7.3.1
Subsequent Fuel Light-Off — Oil ... 5.7.3.2
Subsequent Fuel Light-Off — Gas ... 5.7.3.3
Simultaneous Firing of Oil and Gas for Fuel Transfer Only (Manual Transfer) ... 5.7.4
Required Equipment ... 5.7.4.1
Subsequent Fuel Light-Off — Gas ... 5.7.4.3
Subsequent Fuel Light-Off — Oil ... 5.7.4.2
Simultaneous Firing of Oil and Gas Fuels ... 5.6
Equipment Requirements ... 5.6.2
General ... 5.6.1, A.5.6.1
Shutdown Cycle ... 5.6.5
Boiler Safety Shutdowns ... 5.6.5.5
Gas Safety Shutdowns ... 5.6.5.4
Normal Gas Shutdown Cycle ... 5.6.5.2
Normal Oil Shutdown Cycle ... 5.6.5.1
Oil Safety Shutdowns ... 5.6.5.3, A.5.6.5.3
Simultaneous Firing of Oil and Gas Fuels (Automated Second Fuel Start) ... 5.6.3
Equipment Requirements ... 5.6.3.1
Subsequent Fuel Light-Off — Oil ... 5.6.3.3
Subsequent Fuel Light-Off — Gas ... 5.6.3.4
Simultaneous Firing of Oil and Gas Fuels (Manual Second-Fuel Start) ... 5.6.4
Equipment Requirements ... 5.6.4.1
Subsequent Fuel Light-Off — Gas ... 5.6.4.4
Subsequent Fuel Light-Off — Oil ... 5.6.4.3
Starting of a Cold Boiler ... 5.4
Gas-Fired Boilers ... 5.4.2
General ... 5.4.1
Start-Up Procedures ... 5.4.1.3
Oil-Fired Burners ... 5.4.3
Auxiliary Air Atomizing of Oil ... 5.4.3.1
Required Equipment ... 5.4.3.1.1
Required Facility ... 5.4.3.1.2, A.5.4.3.1.2
Starting Procedure ... 5.4.3.1.3

Copyright 2014 National Fire Protection Association (NFPA). Licensed, by agreement, for individual use and download on October 4, 2014 to LEADER and READER for designated user PATTARAPORN SRITRAKOOL. No other reproduction or transmission in any form permitted without written permission of NFPA. For inquires or to report unauthorized use, contact licensing@nfpa.org.

Auxiliary Mechanical Atomizing of Heavy Oil 5.4.3.2
Required Equipment 5.4.3.2.1
Starting Procedure 5.4.3.2.2
Auxiliary Mechanical Atomizing of Light (Unheated) Oil 5.4.3.3
Required Equipment 5.4.3.3.1
Required Facility 5.4.3.3.2
Starting Procedure 5.4.3.3.3
Solid Fuel Firing in Stokers ..... Annex F
Soot Blower
Definition 3.3.143
Sorbent
Definition 3.3.144
Spent Bed Material
Definition 3.3.145
Stable Bed
Definition 3.3.146
Stable Flame
Definition 3.3.147
Standard
Definition 3.2.8
Steam Generator
Definition 3.3.148
Steam Generator Capacity
Definition 3.3.149
Steam Generator Enclosure
Definition 3.3.150
Stoker
Chain Grate Stoker
Definition 3.3.151.1
Definition 3.3.151
Dump Grate Stoker
Definition 3.3.151.2
Forced Draft Stoker
Definition 3.3.151.3
Front Discharge Stoker
Definition 3.3.151.4
Mechanical Stoker
Definition 3.3.151.5
Multiple Retort Stoker
Definition 3.3.151.6
Overfeed Stoker
Definition 3.3.151.7
Rear Discharge Stoker
Definition 3.3.151.8
Reciprocating Grate Stoker
Definition 3.3.151.9
Side Dump Stoker
Definition 3.3.151.10
Single Retort Stoker
Definition 3.3.151.11
Spreader Stoker
Definition 3.3.151.12
Traveling Grate Stoker
Definition 3.3.151.13
Underfeed Stoker
Definition 3.3.151.14
Water Cooled Stoker
Definition 3.3.151.15
Stoker Descriptions ..... Annex G
Stoker Gate
Definition 3.3.152
Stokers ..... Chap. 10
Access Doors or Observation Ports 10.7
Ash Handling 10.9
Ash Hopper Access Doors 10.8
Combustion Control System 10.3
Flue Gas Analyzers 10.3.3
Overfire Air 10.3.2
System Requirements 10.3.1
Fuel-Burning System 10.2, A.10.2
System Requirements 10.2.1
Subsystems 10.2.1.1
Furnace Inspection 10.5
On-Line Maintenance 10.6
Operation 10.4
Emergency Shutdown 10.4.7
Critical Emergency Situations 10.4.7.5
Loss of Forced Draft Fan 10.4.7.3
Loss of Induced Draft Fan 10.4.7.2
General 10.4.1
Multifuel Firing 10.4.8, A.10.4.8
Normal Hot Start 10.4.6
Normal Operation 10.4.4
Normal Shutdown 10.4.5
Start-Up (General) 10.4.2
Start-Up Procedure (Cold Start) 10.4.3
Purpose 10.1, A.10.1
Sulfation
Definition 3.3.153
Sulfur Capture
Definition 3.3.154
Sulfur Reacted
Definition 3.3.155
Sulfur Retention
Definition 3.3.156
Supervise
Definition 3.3.157
Supplementary Firing
Definition 3.3.158
Switch
Definition 3.3.159
Normal Shutdown, High Steam Pressure Switch
Definition 3.3.159.1
Normal Shutdown, High Water Temperature Switch
Definition 3.3.159.2
Process Monitoring, High Oil Temperature Switch
Definition 3.3.159.3
Process Monitoring, Low Oil Temperature Switch
Definition 3.3.159.4
Proof of Closure Switch
Definition 3.3.159.5
Safety Shutdown, Excessive Steam Pressure Switch
Definition 3.3.159.6
Safety Shutdown, Excessive Water Temperature Switch
Definition 3.3.159.7
Safety Shutdown, High Gas Pressure Switch
Definition 3.3.159.8
Safety Shutdown, Low Gas Pressure Switch
Definition 3.3.159.9
Safety Shutdown, Low Oil Pressure Switch
Definition 3.3.159.10
Safety Shutdown, Low Water Cutout Auxiliary Switch
Definition 3.3.159.11
Safety Shutdown, Low Water Cutout Switch
Definition 3.3.159.12

-T-

Transmitter
Definition 3.3.160
Trial for Ignition Period (Igniter)
Definition 3.3.161
Trial for Ignition Period (Main Burner)
Definition 3.3.162
Tuyeres
Definition 3.3.163

-U-

Unattended Operation
Definition 3.3.164
Unit
Definition 3.3.165

Copyright 2014 National Fire Protection Association (NFPA). Licensed, by agreement, for individual use and download on October 4, 2014 to LEADER and READER for designated user PATTARAPORN SRITRAKOOL. No other reproduction or transmission in any form permitted without written permission of NFPA. For inquires or to report unauthorized use, contact licensing@nfpa.org.

-V-

Valve
Barrier Valve
Definition 3.3.166.1
Burner Shutoff Valve
Definition 3.3.166.2
Charging Valve
Definition 3.3.166.3
Check Valve
Definition 3.3.166.4
Definition 3.3.166
Dusttight Valve
Definition 3.3.166.5
Flow Control Valve
Definition 3.3.166.6
Safety Shutoff Valve (Safety Trip Valve)
Definition 3.3.166.7
Supervisory Shutoff Valve
Definition 3.3.166.8
Vent Control Valve
Definition 3.3.166.9
Vent Valve
Definition 3.3.166.10
Valve-Proving System
Definition 3.3.167
Volatile Matter
Definition 3.3.168

-W-

Watch-Dog Timer
Definition 3.3.169

Copyright 2014 National Fire Protection Association (NFPA). Licensed, by agreement, for individual use and download on October 4, 2014 to LEADER and READER for designated user PATTARAPORN SRITRAKOOL. No other reproduction or transmission in any form permitted without written permission of NFPA. For inquires or to report unauthorized use, contact licensing@nfpa.org.

Tentative Interim Amendment

NFPA® 85

Boiler and Combustion Systems Hazards Code

2011 Edition

Reference: 8.9.2
TIA 11-1
(SC 14-8-20 / TIA Log #1136)

Pursuant to Section 5 of the NFPA *Regulations Governing the Development of NFPA Standards,* the National Fire Protection Association has issued the following Tentative Interim Amendment to NFPA 85, *Boiler and Combustion Systems Hazards Code, 2011* edition. The TIA was processed by the Heat Recovery Steam Generators Technical Committee and the Boiler Combustion System Hazards Correlating Committee, and was issued by the Standards Council on August 14, 2014, with an effective date of September 3, 2014.

A Tentative Interim Amendment is tentative because it has not been processed through the entire standards-making procedures. It is interim because it is effective only between editions of the standard. A TIA automatically becomes a public input of the proponent for the next edition of the standard; as such, it then is subject to all of the procedures of the standards-making process.

1. Revise 8.9.2 to read as follows:

8.9.2 Purge.

8.9.2.1 Unfired HRSG.

8.9.2.1.1 A purge of both the HRSG enclosure and the bypass system shall be completed as required in 8.8.4 prior to the admission of combustion turbine exhaust gas into the HRSG.

8.9.2.1.2 Following the purge as required in 8.9.2.1.1, it shall be permitted to interrupt the flow through the HRSG using the bypass stack.

8.9.2.1.3 Combustion turbine exhaust flow shall be permitted to re-enter the HRSG at a later time without repurging, provided the combustion turbine has been in continuous operation with no trips or misfires.

8.9.2.1.4 Where HRSG isolation is maintained and the combustion turbine operation has been interrupted, the combustion turbine shall be permitted to purge and operate with combustion turbine exhaust through the bypass stack.

8.9.2.1.4.1 When ~~HRSG isolation is removed~~ it is desired to return the HRSG to service, a purge of the HRSG enclosure shall be performed as required by 8.9.2.1.1

8.9.2.1.4.2 After the purge of 8.9.2.1.4.1, an interruption as allowed by 8.9.2.1.2 shall be permitted.

8.9.2.1.4.3 ~~In the event that HRSG isolation is disabled and the combustion turbine can continue to be operated with an exhaust temperature at least 56°C (100°F) lower than the autoignition temperature of the fuels designed for use in the specific combustion turbine, the combustion turbine exhaust gas at this lower temperature shall be permitted to be used to purge the HRSG.~~

Where the combustion turbine operation has been interrupted and it is desired to return the HRSG to service, the combustion turbine shall be permitted to continue operating and the combustion turbine exhaust shall be permitted to be used to purge the HRSG, provided the exhaust temperature is at least 56°C (100°F) lower than the autoignition temperature of the fuels designed for use in the specific combustion turbine.

Copyright 2014 National Fire Protection Association (NFPA). Licensed, by agreement, for individual use and download on October 4, 2014 to LEADER and READER for designated user PATTARAPORN SRITRAKOOL. No other reproduction or transmission in any form permitted without written permission of NFPA. For inquires or to report unauthorized use, contact licensing@nfpa.org.

8.9.2.2 Fired HRSG.

8.9.2.2.1 A purge of both the HRSG enclosure and the bypass system shall be completed as required in 8.8.4 prior to the admission of combustion turbine exhaust gas into the HRSG.

8.9.2.2.2 Where HRSG isolation is continuously maintained and the combustion turbine operation is interrupted, the combustion turbine shall be permitted to purge and operate with combustion turbine exhaust through the bypass stack.

8.9.2.2.2.1 When HRSG isolation is removed, a purge of the HRSG enclosure shall be performed as required by 8.9.2.2.1, except as permitted in 8.9.2.2.4.

8.9.2.2.2.2 ~~In the event that HRSG isolation is disabled and the combustion turbine can continue to be operated with an exhaust temperature at least 56°C (100°F) lower than the autoignition temperature of the fuels designed for use in the specific combustion turbine and duct burner, the combustion turbine exhaust gas at this lower temperature shall be permitted to be used to purge the HRSG.~~

Where the combustion turbine operation has been interrupted and it is desired to return the HRSG to service, the combustion turbine shall be permitted to continue operating and the combustion turbine exhaust shall be permitted to be used to purge the HRSG, provided the exhaust temperature is at least 56°C (100°F) lower than the autoignition temperature of the fuels designed for use in the specific combustion turbine and the duct burner.

8.9.2.2.2.3 Where the combustion turbine has been in continuous operation with no trips or misfires and it is desired to return the HRSG to service, the combustion turbine shall be permitted to continue to be operated and the combustion turbine exhaust may be used to purge the HRSG, provided the exhaust temperature is at least 56°C (100°F) lower than the autoignition temperature of the fuels designed for use in the duct burner.

8.9.2.2.3 If damper(s) operation or other cause(s) results in the exhaust mass flow through the HRSG falling below the purge rate required in 8.8.5, a repurge as required in 8.8.5 shall be performed prior to lighting the duct burner.

8.9.2.2.4* When it is desired that the HRSG be bypassed for a period of time and then for the HRSG to be returned to service by means of damper positioning without a power interruption, one of the following conditions shall be met:

(1) A continuous flow of at least the purge rate of exhaust or fresh air shall be maintained through the HRSG when the combustion turbine is operating.

(2) The combustion turbine is in operation without trips or misfires and the duct burner fuel system satisfies the isolation requirements for a combustion turbine purge credit in accordance with 8.8.4.6.

8.9.2.3* Returning HRSG to Service Where combustion turbine exhaust flow is to be reintroduced to the HRSG through operation of the stack diverter damper, the combustion turbine load and damper sequence of operation shall be in accordance with ~~considered by~~ the HRSG manufacturer's operating instructions.

Issue Date: August 14, 2014
Effective Date: September 3, 2014

Note: Electronic products and pamphlet reprints may have this errata incorporated. For current information about the NFPA Codes and Standards, including this errata, please see www.nfpa.org/codelist)

Copyright © 2014 All Rights Reserved
NATIONAL FIRE PROTECTION ASSOCIATION

Copyright 2014 National Fire Protection Association (NFPA). Licensed, by agreement, for individual use and download on October 4, 2014 to LEADER and READER for designated user PATTARAPORN SRITRAKOOL. No other reproduction or transmission in any form permitted without written permission of NFPA. For inquires or to report unauthorized use, contact licensing@nfpa.org.

Sequence of Events Leading to Issuance of an NFPA Committee Document

Step 1: Call for Proposals

- Proposed new Document or new edition of an existing Document is entered into one of two yearly revision cycles, and a Call for Proposals is published.

Step 2: Report on Proposals (ROP)

- Committee meets to act on Proposals, to develop its own Proposals, and to prepare its Report.
- Committee votes by written ballot on Proposals. If two-thirds approve, Report goes forward. Lacking two-thirds approval, Report returns to Committee.
- Report on Proposals (ROP) is published for public review and comment.

Step 3: Report on Comments (ROC)

- Committee meets to act on Public Comments to develop its own Comments, and to prepare its report.
- Committee votes by written ballot on Comments. If two-thirds approve, Report goes forward. Lacking two-thirds approval, Report returns to Committee.
- Report on Comments (ROC) is published for public review.

Step 4: Technical Report Session

- "*Notices of intent to make a motion*" are filed, are reviewed, and valid motions are certified for presentation at the Technical Report Session. ("Consent Documents" that have no certified motions bypass the Technical Report Session and proceed to the Standards Council for issuance.)
- NFPA membership meets each June at the Annual Meeting Technical Report Session and acts on Technical Committee Reports (ROP and ROC) for Documents with "certified amending motions."
- Committee(s) vote on any amendments to Report approved at NFPA Annual Membership Meeting.

Step 5: Standards Council Issuance

- Notification of intent to file an appeal to the Standards Council on Association action must be filed within 20 days of the NFPA Annual Membership Meeting.
- Standards Council decides, based on all evidence, whether or not to issue Document or to take other action, including hearing any appeals.

Committee Membership Classifications

The following classifications apply to Technical Committee members and represent their principal interest in the activity of the committee.

M *Manufacturer:* A representative of a maker or marketer of a product, assembly, or system, or portion thereof, that is affected by the standard.

U *User:* A representative of an entity that is subject to the provisions of the standard or that voluntarily uses the standard.

I/M *Installer/Maintainer:* A representative of an entity that is in the business of installing or maintaining a product, assembly, or system affected by the standard.

L *Labor:* A labor representative or employee concerned with safety in the workplace.

R/T *Applied Research/Testing Laboratory:* A representative of an independent testing laboratory or independent applied research organization that promulgates and/or enforces standards.

E *Enforcing Authority:* A representative of an agency or an organization that promulgates and/or enforces standards.

I *Insurance:* A representative of an insurance company, broker, agent, bureau, or inspection agency.

C *Consumer:* A person who is, or represents, the ultimate purchaser of a product, system, or service affected by the standard, but who is not included in the *User* classification.

SE *Special Expert:* A person not representing any of the previous classifications, but who has a special expertise in the scope of the standard or portion thereof.

NOTES:
1. "Standard" connotes code, standard, recommended practice, or guide.
2. A representative includes an employee.
3. While these classifications will be used by the Standards Council to achieve a balance for Technical Committees, the Standards Council may determine that new classifications of members or unique interests need representation in order to foster the best possible committee deliberations on any project. In this connection, the Standards Council may make appointments as it deems appropriate in the public interest, such as the classification of "Utilities" in the National Electrical Code Committee.
4. Representatives of subsidiaries of any group are generally considered to have the same classification as the parent organization.

Copyright 2014 National Fire Protection Association (NFPA). Licensed, by agreement, for individual use and download on October 4, 2014 to LEADER and READER for designated user PATTARAPORN SRITRAKOOL. No other reproduction or transmission in any form permitted without written permission of NFPA. For inquires or to report unauthorized use, contact licensing@nfpa.org.

NFPA Document Proposal Form

NOTE: All Proposals must be received by 5:00 pm EST/EDST on the published Proposal Closing Date.

For further information on the standards-making process, please contact the Codes and Standards Administration at 617-984-7249 or visit www.nfpa.org/codes.

For technical assistance, please call NFPA at 1-800-344-3555.

FOR OFFICE USE ONLY

Log #: _____

Date Rec'd: _____

Please indicate in which format you wish to receive your ROP/ROC ☐ **electronic** ☐ **paper** ☒ **download**
(Note: If choosing the download option, you must view the ROP/ROC from our website; no copy will be sent to you.)

Date April 1, 200X **Name** John J. Doe **Tel. No.** 716-555-1234

Company Air Canada Pilot's Association **Email**

Street Address 123 Summer Street Lane **City** Lewiston **State** NY **Zip** 14092

******If you wish to receive a hard copy, a street address MUST be provided. Deliveries cannot be made to PO boxes.***

Please indicate organization represented (if any)

1. (a) NFPA Document Title National Fuel Gas Code **NFPA No. & Year** 54, 200X Edition

(b) Section/Paragraph 3.3

2. Proposal Recommends (check one): ☐ new text ☒ revised text ☐ deleted text

3. Proposal (include proposed new or revised wording, or identification of wording to be deleted): [Note: Proposed text should be in legislative format; i.e., use underscore to denote wording to be inserted (inserted wording) and strike-through to denote wording to be deleted (~~deleted wording~~).]

Revise definition of effective ground-fault current path to read:

3.3.78 Effective Ground-Fault Current Path. An intentionally constructed, permanent, low impedance electrically conductive path designed and intended to carry ~~underground~~ electric fault current ~~conditions~~ from the point of a ground fault on a wiring system to the electrical supply source.

4. Statement of Problem and Substantiation for Proposal: (Note: State the problem that would be resolved by your recommendation; give the specific reason for your Proposal, including copies of tests, research papers, fire experience, etc. If more than 200 words, it may be abstracted for publication.)

Change uses proper electrical terms.

5. Copyright Assignment

(a) ☐ **I am the author of the text or other material (such as illustrations, graphs) proposed in the Proposal.**

(b) ☒ **Some or all of the text or other material proposed in this Proposal was not authored by me. Its source is as follows:** (please identify which material and provide complete information on its source)

ABC Co.

I hereby grant and assign to the NFPA all and full rights in copyright in this Proposal and understand that I acquire no rights in any publication of NFPA in which this Proposal in this or another similar or analogous form is used. Except to the extent that I do not have authority to make an assignment in materials that I have identified in (b) above, I hereby warrant that I am the author of this Proposal and that I have full power and authority to enter into this assignment.

Signature (Required) John J. Doe

PLEASE USE SEPARATE FORM FOR EACH PROPOSAL

Mail to: Secretary, Standards Council · National Fire Protection Association
1 Batterymarch Park · Quincy, MA 02169-7471 OR
Fax to: (617) 770-3500 OR Email to: proposals_comments@nfpa.org

06/09-B

SAMPLE

Copyright 2014 National Fire Protection Association (NFPA). Licensed, by agreement, for individual use and download on October 4, 2014 to LEADER and READER for designated user PATTARAPORN SRITRAKOOL. No other reproduction or transmission in any form permitted without written permission of NFPA. For inquires or to report unauthorized use, contact licensing@nfpa.org.

NFPA Document Proposal Form

NOTE: All Proposals must be received by 5:00 pm EST/EDST on the published Proposal Closing Date.

For further information on the standards-making process, please contact the Codes and Standards Administration at 617-984-7249 or visit www.nfpa.org/codes.

For technical assistance, please call NFPA at 1-800-344-3555.

FOR OFFICE USE ONLY

Log #: _____

Date Rec'd: _____

Please indicate in which format you wish to receive your ROP/ROC ☐ electronic ☐ paper ☐ download
(Note: If choosing the download option, you must view the ROP/ROC from our website; no copy will be sent to you.)

Date _____ **Name** _____ **Tel. No.** _____

Company _____ **Email** _____

Street Address _____ **City** _____ **State** _____ **Zip** _____

******If you wish to receive a hard copy, a street address MUST be provided. Deliveries cannot be made to PO boxes.***

Please indicate organization represented (if any) _____

1. (a) NFPA Document Title _____ **NFPA No. & Year** _____

(b) Section/Paragraph _____

2. Proposal Recommends (check one): ☐ new text ☐ revised text ☐ deleted text

3. Proposal (include proposed new or revised wording, or identification of wording to be deleted): [Note: Proposed text should be in legislative format; i.e., use underscore to denote wording to be inserted (inserted wording) and strike-through to denote wording to be deleted (~~deleted wording~~).]

4. Statement of Problem and Substantiation for Proposal: (Note: State the problem that would be resolved by your recommendation; give the specific reason for your Proposal, including copies of tests, research papers, fire experience, etc. If more than 200 words, it may be abstracted for publication.)

5. Copyright Assignment

(a) ☐ I am the author of the text or other material (such as illustrations, graphs) proposed in the Proposal.

(b) ☐ Some or all of the text or other material proposed in this Proposal was not authored by me. Its source is as follows: (please identify which material and provide complete information on its source)

_____

I hereby grant and assign to the NFPA all and full rights in copyright in this Proposal and understand that I acquire no rights in any publication of NFPA in which this Proposal in this or another similar or analogous form is used. Except to the extent that I do not have authority to make an assignment in materials that I have identified in (b) above, I hereby warrant that I am the author of this Proposal and that I have full power and authority to enter into this assignment.

Signature (Required) _____

PLEASE USE SEPARATE FORM FOR EACH PROPOSAL

Mail to: Secretary, Standards Council · National Fire Protection Association
1 Batterymarch Park · Quincy, MA 02169-7471 OR
Fax to: (617) 770-3500 OR Email to: proposals_comments@nfpa.org

06/09-C