Copyright 2014 National Fire Protection Association (NFPA). Licensed, by agreement, for individual use and download on October 4, 2014 to LEADER and READER for designated user PATTARAPORN SRITRAKOOL. No other reproduction or transmission in any form permitted without written permission of NFPA. For inquires or to report unauthorized use, contact licensing@nfpa.org.

NFPA® 80

Standard for Fire Doors and Other Opening Protectives

2013 Edition



NFPA, 1 Batterymarch Park, Quincy, MA 02169-7471
An International Codes and Standards Organization

Become a Member
Subscribe to the NATIONAL FIRE CODES SUBSCRIPTION SERVICE
Register for Seminars, Webinars, and Online Courses
Visit the NFPA Catalog

Copyright 2014 National Fire Protection Association (NFPA). Licensed, by agreement, for individual use and download on October 4, 2014 to LEADER and READER for designated user PATTARAPORN SRITRAKOOL. No other reproduction or transmission in any form permitted without written permission of NFPA. For inquires or to report unauthorized use, contact licensing@nfpa.org.

IMPORTANT NOTICES AND DISCLAIMERS CONCERNING NFPA® DOCUMENTS
NOTICE AND DISCLAIMER OF LIABILITY CONCERNING THE USE OF NFPA DOCUMENTS

NFPA® codes, standards, recommended practices, and guides ("NFPA Documents"), of which the document contained herein is one, are developed through a consensus standards development process approved by the American National Standards Institute. This process brings together volunteers representing varied viewpoints and interests to achieve consensus on fire and other safety issues. While the NFPA administers the process and establishes rules to promote fairness in the development of consensus, it does not independently test, evaluate, or verify the accuracy of any information or the soundness of any judgments contained in NFPA Documents.

The NFPA disclaims liability for any personal injury, property or other damages of any nature whatsoever, whether special, indirect, consequential or compensatory, directly or indirectly resulting from the publication, use of, or reliance on NFPA Documents. The NFPA also makes no guaranty or warranty as to the accuracy or completeness of any information published herein.

In issuing and making NFPA Documents available, the NFPA is not undertaking to render professional or other services for or on behalf of any person or entity. Nor is the NFPA undertaking to perform any duty owed by any person or entity to someone else. Anyone using this document should rely on his or her own independent judgment or, as appropriate, seek the advice of a competent professional in determining the exercise of reasonable care in any given circumstances.

The NFPA has no power, nor does it undertake, to police or enforce compliance with the contents of NFPA Documents. Nor does the NFPA list, certify, test, or inspect products, designs, or installations for compliance with this document. Any certification or other statement of compliance with the requirements of this document shall not be attributable to the NFPA and is solely the responsibility of the certifier or maker of the statement.

ISBN: 978-145590418-1 (Print)
ISBN: 978-145590467-9 (PDF) 8/12

Copyright 2014 National Fire Protection Association (NFPA). Licensed, by agreement, for individual use and download on October 4, 2014 to LEADER and READER for designated user PATTARAPORN SRITRAKOOL. No other reproduction or transmission in any form permitted without written permission of NFPA. For inquires or to report unauthorized use, contact licensing@nfpa.org.

IMPORTANT NOTICES AND DISCLAIMERS CONCERNING NFPA DOCUMENTS

ADDITIONAL NOTICES AND DISCLAIMERS

Updating of NFPA Documents

Users of NFPA codes, standards, recommended practices, and guides ("NFPA Documents") should be aware that these documents may be superseded at any time by the issuance of new editions or may be amended from time to time through the issuance of Tentative Interim Amendments. An official NFPA Document at any point in time consists of the current edition of the document together with any Tentative Interim Amendments and any Errata then in effect. In order to determine whether a given document is the current edition and whether it has been amended through the issuance of Tentative Interim Amendments or corrected through the issuance of Errata, consult appropriate NFPA publications such as the National Fire Codes® Subscription Service, visit the NFPA website at www.nfpa.org, or contact the NFPA at the address listed below.

Interpretations of NFPA Documents

A statement, written or oral, that is not processed in accordance with Section 6 of the Regulations Governing Committee Projects shall not be considered the official position of NFPA or any of its Committees and shall not be considered to be, nor be relied upon as, a Formal Interpretation.

Patents

The NFPA does not take any position with respect to the validity of any patent rights referenced in, related to, or asserted in connection with an NFPA Document. The users of NFPA Documents bear the sole responsibility for determining the validity of any such patent rights, as well as the risk of infringement of such rights, and the NFPA disclaims liability for the infringement of any patent resulting from the use of or reliance on NFPA Documents.

NFPA adheres to the policy of the American National Standards Institute (ANSI) regarding the inclusion of patents in American National Standards ("the ANSI Patent Policy"), and hereby gives the following notice pursuant to that policy:

NOTICE: The user's attention is called to the possibility that compliance with an NFPA Document may require use of an invention covered by patent rights. NFPA takes no position as to the validity of any such patent rights or as to whether such patent rights constitute or include essential patent claims under the ANSI Patent Policy. If, in connection with the ANSI Patent Policy, a patent holder has filed a statement of willingness to grant licenses under these rights on reasonable and nondiscriminatory terms and conditions to applicants desiring to obtain such a license, copies of such filed statements can be obtained, on request, from NFPA. For further information, contact the NFPA at the address listed below.

Law and Regulations

Users of NFPA Documents should consult applicable federal, state, and local laws and regulations. NFPA does not, by the publication of its codes, standards, recommended practices, and guides, intend to urge action that is not in compliance with applicable laws, and these documents may not be construed as doing so.

Copyrights

NFPA Documents are copyrighted by the NFPA. They are made available for a wide variety of both public and private uses. These include both use, by reference, in laws and regulations, and use in private self-regulation, standardization, and the promotion of safe practices and methods. By making these documents available for use and adoption by public authorities and private users, the NFPA does not waive any rights in copyright to these documents.

Use of NFPA Documents for regulatory purposes should be accomplished through adoption by reference. The term "adoption by reference" means the citing of title, edition, and publishing information only. Any deletions, additions, and changes desired by the adopting authority should be noted separately in the adopting instrument. In order to assist NFPA in following the uses made of its documents, adopting authorities are requested to notify the NFPA (Attention: Secretary, Standards Council) in writing of such use. For technical assistance and questions concerning adoption of NFPA Documents, contact NFPA at the address below.

For Further Information

All questions or other communications relating to NFPA Documents and all requests for information on NFPA procedures governing its codes and standards development process, including information on the procedures for requesting Formal Interpretations, for proposing Tentative Interim Amendments, and for proposing revisions to NFPA documents during regular revision cycles, should be sent to NFPA headquarters, addressed to the attention of the Secretary, Standards Council, NFPA, 1 Batterymarch Park, P.O. Box 9101, Quincy, MA 02169-7471; email: stds_admin@nfpa.org

For more information about NFPA, visit the NFPA website at www.nfpa.org.

Copyright 2014 National Fire Protection Association (NFPA). Licensed, by agreement, for individual use and download on October 4, 2014 to LEADER and READER for designated user PATTARAPORN SRITRAKOOL. No other reproduction or transmission in any form permitted without written permission of NFPA. For inquires or to report unauthorized use, contact licensing@nfpa.org.

Copyright © 2012 National Fire Protection Association®. All Rights Reserved.

NFPA® 80

Standard for

Fire Doors and Other Opening Protectives

2013 Edition

This edition of NFPA 80, *Standard for Fire Doors and Other Opening Protectives*, was prepared by the Technical Committee on Fire Doors and Windows. It was issued by the Standards Council on May 29, 2012, with an effective date of June 18, 2012, and supersedes all previous editions.

This edition of NFPA 80 was approved as an American National Standard on June 18, 2012.

Origin and Development of NFPA 80

The *Standard for Fire Doors and Other Opening Protectives* can be traced to the early days of the NFPA. Reports covering various phases of the problems of protectives for openings were submitted to the Association by several of the committees concerned and were adopted in 1897, 1898, 1899, 1900, 1901, 1902, and 1908. In 1911, a standard on door openings was presented and adopted, and in 1912, *Rules for Fire Protection Coverings for Openings in Walls and Partitions on the Interior of Buildings* was adopted. In 1915, the existing rules were recodified and reorganized. In 1916, the committee in charge of this document was renamed the Committee on Protection of Openings in Walls and Partitions. Revisions recommended by the committee were adopted by the NFPA in 1916, 1917, 1918, 1926, 1927, 1928, 1931, 1937, and 1941.

In 1955, the committee was renamed the Committee on Fire Doors and Windows. In 1959, a complete revision of the 1941 edition, including changing the title to correspond with the name of the committee, was adopted. The standard was revised again in 1961, 1962, 1965, 1966, 1967, 1968, 1970, 1973, 1974, 1975, 1977, 1979, 1981, 1983, 1986, and 1990.

In 1992, the committee changed the title of the document to *Standard for Fire Doors and Fire Windows*. Major changes in the 1992 edition included additions to the standard that recognized the technological changes in glazing materials for fire barrier openings and appendix material on radiant heat transfer. Radiant heat transfer, while not included in the performance requirements for fire doors and fire windows, is a consideration in the design of fire barriers.

The 1995 edition reorganized Chapter 2 for better usability, with many changes to improve consistency. Appendix J was updated to provide more current information on radiant heat transfer.

The chapters were reorganized in the 1999 edition to correlate the section numbers and their requirements. Requirements that are common to all doors, such as clearances and detection, were moved to Chapter 1.

The 2007 edition included a major reorganization in accordance with the *Manual of Style for NFPA Technical Committee Documents* and a title change to accommodate the broader scope of the document. (The 8-year gap between the 1999 and 2007 editions was due to NFPA 80 being returned to committee during the Fall 2002 revision cycle.) New chapters on fabric fire safety curtains and the installation, testing, and maintenance of fire dampers were added. Major technical changes pertained to the maximum clearance permitted under the bottom of doors, new provisions regarding the care and maintenance of fire doors and fire windows, the option for developing performance-based maintenance activities provisions, and provisions regarding chute doors, fire shutters, rolling steel doors, and service counter doors. New information concerning floor fire door assemblies and ratings associated with glazing materials also was added.

The 2010 edition included technical changes for the installation of glazing material in vision panel for new wood doors, installation of glazing and light kits, repair of doors and windows, operation of chute doors, and replacement provisions. The terms *fire protection glazing* and *fire resistance glazing* were made consistent throughout the document to clarify the distinctions between fire protection glazing and fire resistance glazing. Updates also were

NFPA and National Fire Protection Association are registered trademarks of the National Fire Protection Association, Quincy, Massachusetts 02169.

Copyright 2014 National Fire Protection Association (NFPA). Licensed, by agreement, for individual use and download on October 4, 2014 to LEADER and READER for designated user PATTARAPORN SRITRAKOOL. No other reproduction or transmission in any form permitted without written permission of NFPA. For inquires or to report unauthorized use, contact licensing@nfpa.org.

made to several definitions in Chapter 3. The document continued to make editorial changes and update terminology to be consistent with industry practices.

The 2013 edition of NFPA 80 includes a complete editorial reorganization of Chapter 5 to better organize and present the provisions for the inspection, testing, and maintenance of fire doors. Technical revisions have been made to Chapter 5 to clarify its application to include all fire doors, fire shutters, and fire window assemblies, as well as updated provisions to field modifications and the requirement that acceptance testing for fire doors must be completed by a qualified person. Multiple annex notes have been added to aid in the application of field modifications, generic use of opening protectives, periodic inspections, and inspection and testing reports. A new section on records for acceptance tests has also been included in Chapter 5.

In addition, the 2013 edition of NFPA 80 includes provisions for the installation of fusible links in sleeves, new language to address continuous hinges, and revisions related to power operators for special-purpose horizontally sliding accordion or folding doors. The committee has also updated definitions and terminology throughout the document to reflect the current industry practices.

Copyright 2014 National Fire Protection Association (NFPA). Licensed, by agreement, for individual use and download on October 4, 2014 to LEADER and READER for designated user PATTARAPORN SRITRAKOOL. No other reproduction or transmission in any form permitted without written permission of NFPA. For inquires or to report unauthorized use, contact licensing@nfpa.org.

Technical Committee on Fire Doors and Windows

Bruce G. Campbell, *Chair*
Hughes Associates, Inc., CO [SE]

Calvin A. Banning, AREVA NP, Inc., TX [SE]
Chad E. Beebe, American Society for Healthcare Engineering, WA [U]
Daniel R. Bernacki, International Door Association, OH [IM]
Paul R. Coleman, Hillsboro, OR [SE]
William Conner, Bill Conner Associates LLC, IL [SE]
Rep. American Society of Theater Consultants
Jerrold S. Gorrell, Theatre Safety Programs, AZ [IM]
Rep. U.S. Institute for Theatre Technology
Jeffrey E. Gould, FM Approvals/FM Global, MA [I]
Steven C. Hahn, Lawrence Roll-Up Doors, Inc., CA [M]
Rep. Door & Access Systems Manufacturers Assn. International
Harold D. Hicks, Jr., Atlantic Code Consultants, PA [SE]
Charles C. Holt, National Energy Management Institute, VA [SE]
Thomas R. Janicak, Ceco Door Products, IL [M]
Rep. Steel Door Institute
William E. Koffel, Koffel Associates, Inc., MD [M]
Rep. Glazing Industry Code Committee
Nancy L. Kokesh, Intertek Testing Services, WI [RT]
Keith E. Pardoe, Door and Hardware Institute, VA [M]
Vernon J. Patton, First Energy Corporation, OH [U]
James S. Peterkin, Heery International, PA [U]
Rep. NFPA Health Care Section
Steven P. Reynolds, The Peelle Company Ltd., Canada [M]
Rep. National Elevator Industry Inc.
Ronald Rispoli, Entergy Corporation, AR [U]
Thomas A. Salamone, AKF Engineers, NY [SE]
David A. San Paolo, The Maiman Company, MO [M]
Rep. Window & Door Manufacturers Association
Michael L. Savage, Sr., Middle Department Inspection Agency, Inc., MD [E]
Matthew E. Schumann, Underwriters Laboratories Inc., IL [RT]
Michael Tierney, Builders Hardware Manufacturers Association, CT [M]
Garrett S. Tom, International Fire Door Inspector Association, NV [U]
Yunyong P. Utiskul, Exponent, Inc., MD [SE]
Robert Van Becelaere, Ruskin Company, MO [M]
Anthony W. Yuen, University of California, CA [U]

Alternates

Brian D. Black, BDBlack Codes, Inc., NY [M]
(Alt. to S. P. Reynolds)
Richard Cookson, The Cookson Company, AZ [M]
(Alt. to S. C. Hahn)
Michael F. Daly, FM Global, MA [I]
(Alt. to J. E. Gould)
Scott Groesbeck, AREVA NP, Inc., TX [SE]
(Alt. to C. A. Banning)
Vickie J. Lovell, InterCode Incorporated, FL [M]
(Alt. to W. E. Koffel)
Michael Puls, Intertek Testing Services, WI [RT]
(Alt. to N. L. Kokesh)
Kurt A. Roeper, Ingersoll-Rand Security Technologies, OH [M]
(Alt. to T. R. Janicak)
Thomas M. Rubright, William S. Trimble Company, Inc., TN [M]
(Alt. to K. E. Pardoe)
Emmanuel A. Sopeju, Underwriters' Laboratories of Canada, Canada [RT]
(Alt. to M. E. Schumann)
Garry Stewart, The Doorman Service Company, Inc., WA [IM]
(Alt. to D. R. Bernacki)
David V. Tomecek, Hughes Associates, Inc., CO [SE]
(Alt. to B. G. Campbell)
John Woestman, The Kellen Company, IA [M]
(Alt. to M. Tierney)

Nonvoting

John G. Degenkolb, Carson City, NV
(Member Emeritus)
Joseph N. Saino, Memphis, TN [SE]
(Member Emeritus)

Kristin Bigda, NFPA Staff Liaison

This list represents the membership at the time the Committee was balloted on the final text of this edition. Since that time, changes in the membership may have occurred. A key to classifications is found at the back of the document.

NOTE: Membership on a committee shall not in and of itself constitute an endorsement of the Association or any document developed by the committee on which the member serves.

Committee Scope: This Committee shall have primary responsibility for documents on the installation and maintenance of fire doors, windows, shutters, and other equipment used to restrict the spread of fire, including arrangements for automatic operation in case of fire. This includes installation to protect buildings against external fire and to restrict the spread of fire within buildings. Vault and record room doors are covered by the Technical Committee on Record Protection.

Copyright 2014 National Fire Protection Association (NFPA). Licensed, by agreement, for individual use and download on October 4, 2014 to LEADER and READER for designated user PATTARAPORN SRITRAKOOL. No other reproduction or transmission in any form permitted without written permission of NFPA. For inquires or to report unauthorized use, contact licensing@nfpa.org.

Contents

Chapter 1 Administration 80– 6
1.1 Scope 80– 6
1.2 Purpose 80– 6
1.3 Retroactivity 80– 6
1.4 Equivalency 80– 6

Chapter 2 Referenced Publications 80– 6
2.1 General 80– 6
2.2 NFPA Publications 80– 6
2.3 Other Publications 80– 7
2.4 References for Extracts in Mandatory Sections 80– 7

Chapter 3 Definitions 80– 7
3.1 General 80– 7
3.2 NFPA Official Definitions 80– 7
3.3 General Definitions 80– 8

Chapter 4 General Requirements 80–12
4.1 General Limitations 80–12
4.2 Listed and Labeled Products 80–12
4.3 Classifications and Types of Doors 80–12
4.4 Glazing Material in Fire Doors 80–13
4.5 Fire Resistance–Rated Glazing in Doors and Windows 80–13
4.6 Classification of Hardware for Fire Doors 80–13
4.7 Placement of Detectors 80–13
4.8 Supporting Construction 80–14

Chapter 5 Care and Maintenance 80–15
5.1 General 80–15
5.2 Inspection and Testing. 80–15
5.3 Retrofit Operators 80–17
5.4 Performance-Based Option 80–17
5.5 Maintenance. 80–17

Chapter 6 Swinging Doors with Builders Hardware 80–17
6.1 Doors 80–17
6.2 Supporting Construction 80–17
6.3 Openings 80–18
6.4 Assembly Components 80–18
6.5 Application, Installation, and Adjustment 80–20

Chapter 7 Swinging Doors with Fire Door Hardware 80–21
7.1 Doors 80–21
7.2 Supporting Construction 80–21
7.3 Openings 80–21
7.4 Assembly Components 80–21

Chapter 8 Horizontally Sliding Doors 80–21
8.1 Doors 80–21
8.2 Supporting Construction 80–22
8.3 Openings. (Reserved) 80–22
8.4 Assembly Components 80–22

Chapter 9 Special-Purpose Horizontally Sliding Accordion or Folding Doors 80–23
9.1 Doors 80–23
9.2 Supporting Construction 80–23
9.3 Clearances Around Openings 80–23
9.4 Assembly Components 80–24

Chapter 10 Vertically Sliding Fire Doors 80–24
10.1 Doors 80–24
10.2 Supporting Construction 80–24
10.3 Clearances 80–24
10.4 Assembly Components 80–24

Chapter 11 Rolling Steel Doors 80–25
11.1 Doors 80–25
11.2 Supporting Construction 80–25
11.3 Openings 80–25
11.4 Assembly Components 80–26
11.5 Weather Protection 80–26

Chapter 12 Fire Shutters 80–26
12.1 Types 80–26
12.2 Requirements 80–26
12.3 Weather Protection 80–26

Chapter 13 Service Counter Fire Doors 80–26
13.1 Doors 80–26
13.2 Supporting Construction 80–26
13.3 Counters 80–27
13.4 Automatic Closing 80–27

Chapter 14 Hoistway Doors for Elevators and Dumbwaiters 80–27
14.1 Doors 80–27
14.2 Types of Doors 80–27
14.3 Hoistway Door Vision Panels 80–28
14.4 Door Operation 80–28

Chapter 15 Chute Doors 80–28
15.1 Doors 80–28

Chapter 16 Access Doors 80–29
16.1 Doors 80–29
16.2 Types of Doors 80–29

Chapter 17 Fire Windows 80–29
17.1 Windows 80–29
17.2 Glazing Material 80–29
17.3 Types of Windows 80–29

Copyright 2014 National Fire Protection Association (NFPA). Licensed, by agreement, for individual use and download on October 4, 2014 to LEADER and READER for designated user PATTARAPORN SRITRAKOOL. No other reproduction or transmission in any form permitted without written permission of NFPA. For inquires or to report unauthorized use, contact licensing@nfpa.org.

17.4 Installation 80–30
17.5 Closing Devices 80–30

Chapter 18 Glass Block Assemblies 80–30
18.1 General 80–30
18.2 Installation 80–30

Chapter 19 Installation, Testing, and Maintenance of Fire Dampers 80–30
19.1 General 80–30
19.2 Installation 80–31
19.3 Operational Test 80–32
19.4 Periodic Inspection and Testing 80–32
19.5 Maintenance 80–33

Chapter 20 Fabric Fire Safety Curtains 80–33
20.1 General 80–33
20.2 Fabric Fire Safety Curtain Components 80–33
20.3 Installation 80–34
20.4 Fire Safety Curtain Assemblies 80–34
20.5 Supporting Construction 80–35
20.6 Rigging and Lifting Equipment 80–35
20.7 Operation of the Fire Safety Curtain Assembly 80–37
20.8 Acceptance Testing 80–37
20.9 Care and Maintenance 80–38

Annex A Explanatory Material 80–38

Annex B Fire Doors: Protection of Conveyor Openings 80–66

Annex C Illustration of Types of Fire Window Components 80–68

Annex D Fire Door and Fire Window Classifications 80–68

Annex E Surface Attachments to Swinging Door Faces 80–70

Annex F Door Hardware Locations 80–70

Annex G Types of Door Construction 80–71

Annex H Special Purpose Doors 80–72

Annex I Radiant Heat Transfer 80–72

Annex J Performance-Based Option for the Inspection, Testing, and Maintenance of Fire Door Assemblies 80–74

Annex K General Information About Fire Doors 80–75

Annex L Informational References 80–76

Index 80–78

Copyright 2014 National Fire Protection Association (NFPA). Licensed, by agreement, for individual use and download on October 4, 2014 to LEADER and READER for designated user PATTARAPORN SRITRAKOOL. No other reproduction or transmission in any form permitted without written permission of NFPA. For inquires or to report unauthorized use, contact licensing@nfpa.org.

NFPA 80

Standard for

Fire Doors and Other Opening Protectives

2013 Edition

IMPORTANT NOTE: This NFPA document is made available for use subject to important notices and legal disclaimers. These notices and disclaimers appear in all publications containing this document and may be found under the heading "Important Notices and Disclaimers Concerning NFPA Documents." They can also be obtained on request from NFPA or viewed at www.nfpa.org/disclaimers.

NOTICE: An asterisk (*) following the number or letter designating a paragraph indicates that explanatory material on the paragraph can be found in Annex A.

Changes other than editorial are indicated by a vertical rule beside the paragraph, table, or figure in which the change occurred. These rules are included as an aid to the user in identifying changes from the previous edition. Where one or more complete paragraphs have been deleted, the deletion is indicated by a bullet (•) between the paragraphs that remain.

A reference in brackets [ ] following a section or paragraph indicates material that has been extracted from another NFPA document. As an aid to the user, the complete title and edition of the source documents for extracts in mandatory sections of the document are given in Chapter 2 and those for extracts in informational sections are given in Annex L. Extracted text may be edited for consistency and style and may include the revision of internal paragraph references and other references as appropriate. Requests for interpretations or revisions of extracted text shall be sent to the technical committee responsible for the source document.

Information on referenced publications can be found in Chapter 2 and Annex L.

Chapter 1 Administration

1.1* Scope. This standard regulates the installation and maintenance of assemblies and devices used to protect openings in walls, floors, and ceilings against the spread of fire and smoke within, into, or out of buildings.

1.1.1* With the exception of fabric fire safety curtain assemblies, this standard addresses assemblies that have been subjected to standardized fire tests. *(See Chapter 20.)*

1.1.2* Incinerator doors, record room doors, and vault doors are not covered in this standard.

1.1.3* Requirements for horizontally sliding, vertically sliding, and swinging doors as used in this standard do not apply to hoistway doors for elevators and dumbwaiters.

1.1.4* This standard does not cover fire resistantance glazing materials and horizontally sliding accordion or folding assemblies fabricated for use as walls and tested as wall assemblies in accordance with ASTM E119, *Standard Test Methods for Fire Tests of Building Construction and Materials.*

1.2 Purpose.

1.2.1 The purpose of this document is to set national standards for the installation and maintenance of assemblies used to protect openings in walls, floors, and ceilings to prevent or retard the spread of fire and smoke within, into, or out of buildings.

1.2.2 This document is also intended to give guidance to authorities having jurisdiction (AHJs) so they can determine in the field if an assembly meets the requirements and standards outlined in this document and if maintenance standards have been maintained.

1.2.3* It is not the purpose of this standard to establish the degree of protection required or to constitute the approval of any product.

1.3* Retroactivity.

1.3.1 This standard is based on product and engineering practices recognized as acceptable at the date of issue.

1.3.2 Unless otherwise noted, it is not intended that the provisions of this document be applied to facilities, equipment, structures, or installations that were existing or approved for construction or installation prior to the effective date of the document.

1.3.3 In those cases where it is determined by the AHJ that the existing situation involves a distinct hazard to life or property, retroactive application of the provisions of this document shall be permitted.

1.4 Equivalency.

1.4.1* This standard shall not prohibit the development of new, modified, or improved devices that meet the intent of these requirements.

1.4.2 It shall be the responsibility of the manufacturer to furnish the information necessary to update the requirements pertaining to such new and improved devices.

1.4.3 For devices not described in this standard, the AHJ shall request descriptive information from manufacturers that is provided by a testing laboratory concerning acceptable methods for satisfactory field installation based on fire tests and engineering studies for operation and maintenance considerations, where applicable.

Chapter 2 Referenced Publications

2.1 General. The documents or portions thereof listed in this chapter are referenced within this standard and shall be considered part of the requirements of this document.

2.2 NFPA Publications. National Fire Protection Association, 1 Batterymarch Park, Quincy, MA 02169-7471.

NFPA 72®, National Fire Alarm and Signaling Code, 2013 edition.

NFPA 90A, *Standard for the Installation of Air-Conditioning and Ventilating Systems,* 2012 edition.

NFPA 105, *Standard for Smoke Door Assemblies and Other Opening Protectives,* 2013 edition.

NFPA 252, *Standard Methods of Fire Tests of Door Assemblies,* 2012 edition.

NFPA 253, *Standard Method of Test for Critical Radiant Flux of Floor Covering Systems Using a Radiant Heat Energy Source,* 2011 edition.

NFPA 257, *Standard on Fire Test for Window and Glass Block Assemblies,* 2012 edition.

NFPA 288, *Standard Methods of Fire Tests of Horizontal Fire Door Assemblies Installed in Horizontal Fire Resistance–Rated Assemblies,* 2012 edition.

Copyright 2014 National Fire Protection Association (NFPA). Licensed, by agreement, for individual use and download on October 4, 2014 to LEADER and READER for designated user PATTARAPORN SRITRAKOOL. No other reproduction or transmission in any form permitted without written permission of NFPA. For inquires or to report unauthorized use, contact licensing@nfpa.org.

NFPA 701, *Standard Methods of Fire Tests for Flame Propagation of Textiles and Films,* 2010 edition.

2.3 Other Publications.

2.3.1 ASME Publications. American Society of Mechanical Engineers, Three Park Avenue, New York, NY 10016-5990.

ASME A17.1/CSA B44–07, *Safety Code for Elevators and Escalators,* 2007.

2.3.2 ASTM Publications. ASTM International, 100 Barr Harbor Drive, P.O. Box C700, West Conshohocken, PA 19428-2959.

ASTM A36, *Standard Specification for Carbon Structural Steel,* ASTM A36/A36M-08.

ASTM D4157, *Standard Test Method for Abrasion Resistance of Textile Fabrics (Oscillatory Cylinder Method),* 2010.

ASTM D5034, *Standard Test Method for Breaking Strength and Elongation of Textile Fabrics (Grab Test),* 2009.

ASTM D6193, *Standard Practice for Stitches and Seams,* 2011.

ASTM E119, *Standard Test Methods for Fire Tests of Building Construction and Materials,* 2011.

2.3.3 BHMA Publications. Builders Hardware Manufacturers Association, 355 Lexington Avenue, 15th Floor, New York, NY 10017.

ANSI/BHMA A156.1, *Standard for Butts and Hinges,* 2006.

ANSI/BHMA A156.4, *Standard for Door Controls (Closers),* 2008.

ANSI/BHMA A156.17, *Standard for Self Closing Hinges & Pivots,* 2010.

ANSI/BHMA A156.26, *American National Standard for Continuous Hinges,* 2006.

2.3.4 GSA Publications. U.S. General Services Administration, 1800 F Street, NW, Washington, DC 20405.

Federal Specification A-A-1923A, *Shield Expansion (Lag, Machine and Externally Threaded Wedge),* 1995.

Federal Specification A-A-1924A, *Shield, Expansion (Self Drilling Tubular Expansion Shell Bolt),* 1995.

Federal Specification A-A-55614, *Shield, Expansion (Non-Drilling Expansion Anchors),* 1995.

2.3.5 SMACNA Publications. Sheet Metal and Air Conditioning Contractors' National Association, 4201 Lafayette Center Drive, Chantilly, VA 20151-1209.

Fire, Smoke and Radiation Damper Installation Guide for HVAC Systems , 2002.

2.3.6 UL Publications. Underwriters Laboratories Inc., 333 Pfingsten Road, Northbrook, IL 60062-2096.

ANSI/UL 9, *Standard for Fire Tests of Window Assemblies,* 2004, Revised April 2009.

ANSI/UL 10A, *Standard for Tin-Clad Fire Doors,* 1998, Revised March 2009.

ANSI/UL 14C, *Swing Hardware for Tin-Clad Fire Doors Mounted Singly and in Pairs,* 2006, Revised 2008.

ANSI/UL 33, *Standard for Heat Responsive Links for Fire-Protection Services,* 2010.

ANSI/UL 555, *Standard for Fire Dampers,* 2006, Revised 2011.

UL 864, *Standard for Control Units and Accessories for Fire Alarm Systems,* 2003.

2.3.7 Other Publications.

Merriam-Webster's Collegiate Dictionary, 11th edition, Merriam-Webster, Inc., Springfield, MA, 2003.

2.4 References for Extracts in Mandatory Sections.

NFPA 72®, National Fire Alarm and Signaling Code, 2013 edition.

NFPA 5000®, Building Construction and Safety Code®, 2012 edition.

Chapter 3 Definitions

3.1 General. The definitions contained in this chapter shall apply to the terms used in this standard. Where terms are not defined in this chapter or within another chapter, they shall be defined using their ordinarily accepted meanings within the context in which they are used. *Merriam-Webster's Collegiate Dictionary,* 11th edition, shall be the source for the ordinarily accepted meaning.

3.2 NFPA Official Definitions.

3.2.1* Approved. Acceptable to the authority having jurisdiction.

3.2.2* Authority Having Jurisdiction (AHJ). An organization, office, or individual responsible for enforcing the requirements of a code or standard, or for approving equipment, materials, an installation, or a procedure.

3.2.3 Labeled. Equipment or materials to which has been attached a label, symbol, or other identifying mark of an organization that is acceptable to the authority having jurisdiction and concerned with product evaluation, that maintains periodic inspection of production of labeled equipment or materials, and by whose labeling the manufacturer indicates compliance with appropriate standards or performance in a specified manner.

3.2.4* Listed. Equipment, materials, or services included in a list published by an organization that is acceptable to the authority having jurisdiction and concerned with evaluation of products or services, that maintains periodic inspection of production of listed equipment or materials or periodic evaluation of services, and whose listing states that either the equipment, material, or service meets appropriate designated standards or has been tested and found suitable for a specified purpose.

3.2.5 Shall. Indicates a mandatory requirement.

3.2.6 Should. Indicates a recommendation or that which is advised but not required.

3.2.7 Standard. A document, the main text of which contains only mandatory provisions using the word "shall" to indicate requirements and which is in a form generally suitable for mandatory reference by another standard or code or for adoption into law. Nonmandatory provisions are not to be considered a part of the requirements of a standard and shall be located in an appendix, annex, footnote, informational note, or other means as permitted in the *Manual of Style for NFPA Technical Committee Documents.*

Copyright 2014 National Fire Protection Association (NFPA). Licensed, by agreement, for individual use and download on October 4, 2014 to LEADER and READER for designated user PATTARAPORN SRITRAKOOL. No other reproduction or transmission in any form permitted without written permission of NFPA. For inquires or to report unauthorized use, contact licensing@nfpa.org.

3.3 General Definitions.

3.3.1 Access Door. A door assembly, for installation in fire resistance–rated walls or for installation in ceilings of fire resistance–rated floor–ceiling or roof–ceiling assemblies, that is used to provide access to shafts, chases, attics, spaces above ceilings, or other concealed spaces.

3.3.1.1 ***Horizontal Access Door.*** An access door installed in the horizontal plane used to protect openings in ceilings of fire resistance–rated floor–ceiling or roof–ceiling assemblies.

3.3.1.2 ***Vertical Access Door.*** An access door installed in the vertical plane used to protect openings in fire-rated walls.

3.3.2 Active Leaf. The first operating door of a pair, which is usually the door in which a lock is installed.

3.3.3 Ambient. For the purposes of this standard, the temperature of the room in which the test is being conducted.

3.3.4 Anchor. A device for attaching frames to the surrounding structure.

3.3.5* Astragal.

3.3.5.1 ***Overlapping Astragal.*** A horizontal or vertical molding attached to one leaf of a pair of doors.

3.3.5.2* ***Split Astragal.*** A horizontal or vertical molding attached to both leaves of a pair of doors.

3.3.6 Automatic-Closing Device. A device that causes the door or window to close when activated by a fusible link or detector.

3.3.7* Automatic-Closing Door. A door that normally is open but that closes when the automatic-closing device is activated.

3.3.8 Automatic Fire Detector. A device designed to detect the presence of a fire signature and to initiate action. For the purpose of this standard, automatic fire detectors are classified as follows: Automatic Fire Extinguishing or Suppression System Operation Detector, Fire–Gas Detector, Heat Detector, Other Fire Detectors, Radiant Energy–Sensing Fire Detector, and Smoke Detector. [**72**, 2013]

3.3.9 Automatic Louver. An opening in a door with a series of slats or blades to allow passage of air and designed to close automatically in the event of fire.

3.3.10 Automatic Top and Bottom Bolts. See 3.3.67.1, Automatic Flush Bolts.

3.3.11 Barrel. A cylindrical horizontal member at the head of the opening that supports the door curtain of a rolling steel door and contains the counterbalance springs.

3.3.12 Batten. A horizontal pipe, tube, or other structural shape in a pocket of or attached to a fire safety curtain.

3.3.13 Binders. Pieces of hardware used to hold a sliding door to the wall, preventing lateral movement of the door from the wall.

3.3.14 Biparting. A vertically sliding door in which half of the door moves up and half of the door moves down in order to open, or a horizontal sliding door in which one door moves to the right and one moves to the left in order to open.

3.3.15 Bottom Bar (Rolling Steel Door). A reinforcing member at the lower edge of the door curtain assembly.

3.3.16 Breakaway Connection. A joint connecting a fire damper sleeve and attached ductwork that will allow collapse of the ductwork during a fire without disturbing the integrity of the fire damper.

3.3.17 Bumper (Fire Safety Curtain). A filled fabric pocket below the bottom batten or frame member of a fire safety curtain designed to press against the floor.

3.3.18 Bumpers. Stops to limit the closing or opening movement of a sliding door.

3.3.19 Ceiling Radiation Damper. A listed device installed in a ceiling membrane of a fire resistance–rated floor-ceiling or roof-ceiling assembly to automatically limit the radiative heat transfer through an air inlet/outlet opening. [**5000**, 2012]

3.3.20 Center Latch. A latch used to hold the two halves of a center-parting or biparting fire door together, which is usually two pieces surface-applied to doors and interlocked in the closed position.

3.3.21 Center Parting. See 3.3.14, Biparting.

3.3.22 Chafing Strip. A metal strip applied to the back surface of a sliding door to protect the door surface from damage from the wall.

3.3.23 Channel Frame. A frame that consists of head and jamb members of structural steel channels, either shop assembled or field assembled, to be used with masonry walls.

3.3.24* Classified. Products or materials of a specific group category that are constructed, inspected, tested, and subsequently reinspected in accordance with an established set of requirements.

3.3.25 Closed Position (Rolling Steel Fire Door). A position of the door curtain with the underside of the bottom bar, including a compressible seal or sensing edge, if provided, in contact with the sill along the entire width of the opening.

3.3.26 Closing Device. A means of closing a door from the partially or fully opened position.

3.3.27 Combination Fire/Smoke Damper. A device that meets both the fire damper and smoke damper requirements.

3.3.28 Concrete Lintel. A precast concrete horizontal member spanning and carrying the load above an opening.

3.3.29 Continuous Glazing Molding. A continuous molding used to hold glass or glazing in a window.

3.3.30 Coordinator. A device used on pairs of swinging doors that prevents the active leaf from closing before the inactive leaf closes.

3.3.31 Counterbalancing. A method by which the hanging weight of the door is balanced by helical torsion springs or weights.

3.3.32 Cover Plate. A plate to cover the joint between the sections of multiple panel doors, usually applied to the front and back of the vertical or horizontal slide door.

3.3.33 Crush Plates. Bearing plates provided where doors are mounted on concrete masonry wall units with hollow cells to accommodate through-wall bolts to prevent crushing of the hollow concrete masonry unit.

3.3.34 Curtain (Rolling Steel Fire Door). Interlocking curtain slats assembled together.

3.3.35 Curtain Slats. Formed sheet steel members that, when interlocked together, form the rolling steel door curtain.

Copyright 2014 National Fire Protection Association (NFPA). Licensed, by agreement, for individual use and download on October 4, 2014 to LEADER and READER for designated user PATTARAPORN SRITRAKOOL. No other reproduction or transmission in any form permitted without written permission of NFPA. For inquires or to report unauthorized use, contact licensing@nfpa.org.

3.3.36 Detector. See 3.3.8, Automatic Fire Detector.

3.3.37 Door.

3.3.37.1 ***Access Door.*** See 3.3.1.

3.3.37.2 ***Automatic-Closing Door.*** See 3.3.7.

3.3.37.3 ***Power-Operated Fire Door.*** See 3.3.92.

3.3.37.4 ***Self-Closing Door.*** See 3.3.101.

3.3.37.5 ***Service Counter Fire Door.*** See 3.3.104.

3.3.38 Door Closer (Swinging). A labeled device that, where applied to a door and frame, causes an open door to close by mechanical force. The closing speed can be regulated by this device.

3.3.39 Door Holder/Release Device. A labeled, fail-safe device, controlled by a detection device, used on an automatic-closing door to release the door at the time of fire.

3.3.40 Door Protection Plate. Protective material applied to the face of a door and generally made of approximately 0.05 in. (1.2 mm) thick brass, bronze, aluminum, or stainless steel or ⅛ in. (3.2 mm) thick laminated plastic.

3.3.41* Double Egress Doors. A pair of swinging doors, each leaf of which swings in the opposite direction of the other.

3.3.42 Dutch Door. A door divided horizontally so that the lower part can be shut while the upper part remains open.

3.3.43 Dynamic System. An HVAC system designed to maintain the movement of air within the system at the indication of a fire.

3.3.44 Egress Side. The side of an opening from which traffic exits.

3.3.45 Fail-Safe Device. A device that will provide its intended function upon loss of power.

3.3.46* Field Modifications. Changes, not otherwise permitted by this standard, made to a listed assembly or component after it has been manufactured.

3.3.47 Finish Frame. A subframe attached to a rough buck to which the door is attached.

3.3.48 Fire Damper. A device installed in an air distribution system, designed to close automatically upon detection of heat, to interrupt migratory airflow and to restrict the passage of flame. Fire dampers are classified for use in either static systems or for dynamic systems, where the dampers are rated for closure under airflow.

3.3.49* Fire Door. The door component of a fire door assembly.

3.3.50 Fire Door Assembly. Any combination of a fire door, a frame, hardware, and other accessories that together provide a specific degree of fire protection to the opening.

3.3.51 Fire Door Frame. A component forming the perimeter of an opening in a fire door assembly that is supplied welded or knocked down and anchored to the surrounding structure.

3.3.52* Fire Door Frame for Lights. A frame that, in addition to a door opening, contains an opening(s) for use with glazing materials.

3.3.53* Fire Door Frame for Panels. A frame that, in addition to a door opening, contains an opening(s) for use with fixed panels of solid metal or wood.

3.3.54 Fire Door Hardware. Door hardware furnished for swinging and sliding fire doors by the door manufacturer as a component part of the listed door assembly.

3.3.55 Fire Exit Hardware. Labeled devices for swinging fire doors installed to facilitate safe egress of persons and generally consisting of a crossbar and various types of latch mechanisms that cannot hold the latch in a retracted locked position.

3.3.56* Fire Protection Glazing. Glazing that has a fire protection rating.

3.3.57 Fire Protection Rating. For the purposes of this standard, the designation indicating the duration of the fire test exposure to which a fire door assembly or fire window assembly was exposed and for which it successfully met all acceptance criteria as determined in accordance with NFPA 252, *Standard Methods of Fire Tests of Door Assemblies*, or NFPA 257, *Standard on Fire Test for Window and Glass Block Assemblies*, respectively. *(See also Annex D.)*

3.3.58 Fire-Rated Damper Mullion. A mullion used to separate multiple listed dampers in large openings.

3.3.59 Fire Resistance Glazing. Glazing that has a fire resistance rating.

3.3.60 Fire Resistance Rating. The time, in minutes or hours, that materials or assemblies have withstood a fire exposure as established in accordance with the test procedures of ASTM E119, *Standard Test Methods for Fire Tests of Building Construction and Materials.*

3.3.61 Fire Safety Curtain. A curtain of fire-resistant fabric and noncombustible framing materials.

3.3.61.1 ***Brail Fire Safety Curtain.*** A fire safety curtain that folds up and stores in the space above a proscenium opening.

3.3.61.2 ***Straight-Lift Fire Safety Curtain.*** A fire safety curtain consisting of one or more flat panel(s) that lifts up and stores above the proscenium opening.

3.3.61.3 ***Unframed Fire Safety Curtain.*** A straight lift fire safety curtain containing no internal vertical framing members.

3.3.62 Fire Safety Curtain Assembly. A fire safety curtain and all other components necessary to form a complete assembly.

3.3.62.1 ***Framed Fire Safety Curtain Assembly.*** A straight lift–type fire safety curtain assembly containing a rigid perimeter frame and internal members.

3.3.63 Fire Shutter. A fire door assembly used for the protection of a window opening in an exterior wall.

3.3.64 Fire Window Assembly. A window or glass block assembly having a fire protection rating.

3.3.65 Flame Baffle. A hinged piece of sheet metal within the hood that, when released, closes the space between the top of the curtain and the hood of a rolling steel fire door.

3.3.66 Floor Fire Door Assembly. A combination of a fire door, a frame, hardware, and other accessories installed in a horizontal plane that together provide a specific degree of fire protection to a through-opening in a fire resistance–rated floor.

3.3.67 Flush Bolts.

3.3.67.1 ***Automatic Flush Bolts.*** A mortised bolt installed near the top or bottom of the inactive leaf of a pair of doors that holds the inactive leaf in a closed position until the active leaf is opened.

Copyright 2014 National Fire Protection Association (NFPA). Licensed, by agreement, for individual use and download on October 4, 2014 to LEADER and READER for designated user PATTARAPORN SRITRAKOOL. No other reproduction or transmission in any form permitted without written permission of NFPA. For inquires or to report unauthorized use, contact licensing@nfpa.org.

3.3.67.2 ***Manual Flush Bolts.*** A mortised bolt installed near the top or bottom of the inactive leaf of a pair of doors in which the bolts are manually extended or retracted into or out of the header or sill by means of a lever.

3.3.68 Follow-Up Inspection Procedure. Documents provided by the listing agency that are referenced in routine follow-up inspections and, where appropriate, field inspections.

3.3.69 Fusible Link. For the purposes of this standard, a listed device consisting of pieces of metal held together by low-melting-point solder.

3.3.70* Glazing Angle Clips. Steel clips used to hold glass in place in windows glazed only with glazing compound.

3.3.71 Governor (Sliding, Vertical, and Rolling Steel Fire Doors). A device that limits the rate of descent of the door during automatic closure.

3.3.72 Guide (Rolling Doors). Vertical assembly in which the curtain travels and that is fastened to the jamb, retaining the edges of the door curtain, and closing the space between the curtain, edges, and the jamb.

3.3.73 Guide Rail (Sliding Door, Vertical). A steel member attached to the wall or frame; used with vertical sliding doors to guide the door.

3.3.74 Guide Shoe (Sliding Door, Vertical). A member attached to vertical sliding doors; used to guide and retain the door on the guide rail.

3.3.75 Guide Wall Angle (Rolling Steel Doors). The component of the guide assembly that is fastened to the jamb.

3.3.76 Hanger (Sliding Door, Horizontal). A member used to attach a horizontally sliding door to the track and to cause the door to roll on or in the track.

3.3.77 Heat-Actuated Device. Devices that include fixed temperature releases, rate-of-temperature-rise releases, and door closers with hold-open arms embodying a fusible link.

3.3.78 Hollow Metal Frame. A frame formed from sheet metal.

3.3.79 Hood (Rolling Steel Door). A sheet metal housing that mounts horizontally between the brackets, serving as an enclosure for the coiled curtain and closing the space between the door coil and the lintel.

3.3.80 Inactive Leaf. One door of a pair of doors that ordinarily is latched closed; the second operating door of a pair.

3.3.81 Keeper. A guide and a restraint used on latching devices.

3.3.82 Knocked-Down Frame. Door frame furnished by manufacturer in three or more basic parts for assembly in the field.

3.3.83 Lap-Mounted Door (Sliding Door, Vertical Door, Horizontal Door, Swinging Door). Doors mounted on the face of a wall and overlapping the opening by a prescribed dimension.

3.3.84 Latching Device. A spring-loaded latch bolt or a gravity-operated steel bar that, after release by physical action, returns to its operating position and automatically engages the strike plate when it is returned to the closed position.

3.3.85 Lintel. A horizontal member spanning and carrying the load above an opening.

3.3.86 Mullion. A fixed or removable vertical member set in a double door opening that allows both leaves to be active or set between a door and a side light or a separate, framed, glazed area.

3.3.86.1 ***Window Mullion.*** The separate horizontal or vertical member or members used to join windows in a multiple window opening.

3.3.87* Multiple Opening Door Frame. A door assembly that consists of more than two doors.

3.3.88 Muntin. A bar member supporting and separating panes of glass within a sash, door, or glazing frame.

3.3.88.1 ***Window Muntin.*** A tee-shaped bar in a frame or ventilator, dividing the glass.

3.3.89 Noncombustible. Not capable of igniting and burning when subjected to a fire.

3.3.90 Pass Door. A swinging door in a sliding door for personnel use.

3.3.91 Plant-On. A decorative trim applied to the surface of a door. *(See also Annex E.)*

3.3.92 Power-Operated Fire Doors. Doors that normally are opened and closed electrically or pneumatically.

3.3.93 Proscenium Wall. The wall that separates the stage from the auditorium or house. [**5000**, 2012]

3.3.94 Purchase Line (Hand Line). The line attached to the counterweight for manual opening and closing of the fire safety curtain.

3.3.95 Qualified Person. A person who, by possession of a recognized degree, certificate, professional standing, or skill, and who, by knowledge, training, and experience, has demonstrated the ability to deal with the subject matter, the work, or the project.

3.3.96 Retaining Angle. The metal angle used to retain the fire damper in the opening.

3.3.97 Retrofit Operator. A device labeled as a "retrofit rolling steel fire door operator" intended to replace operator and governor systems (including automatic-closing devices) used on existing listed rolling steel fire doors.

3.3.98 Roller Guide/Metal Track Side Edge Guide System. Continuous tracks with captive trolleys or rollers at each vertical edge of the curtain used to guide and restrain the fire safety curtain.

3.3.99* Rolling Steel Fire Door. A fire door assembly consisting of a curtain, a bottom bar, a barrel, brackets, guides, a hood, and an automatic-releasing device.

3.3.100 Rough Buck. A subframe, usually channel shaped, attached to an existing wall to which the finished frame is attached.

3.3.101 Self-Closing Doors. Doors that, when opened and released, return to the closed position.

3.3.102 Self-Latching Bolt. An automatic-latching device that engages in a keeper to hold a door leaf in a closed position and that can only be released manually.

3.3.103 Sensing Edge (Rolling Steel Fire Door). A device added to the underside of the bottom bar of a power-operated rolling steel fire door or fire shutter that stops or reverses the door curtain upon contact with an obstruction when closing under power.

Copyright 2014 National Fire Protection Association (NFPA). Licensed, by agreement, for individual use and download on October 4, 2014 to LEADER and READER for designated user PATTARAPORN SRITRAKOOL. No other reproduction or transmission in any form permitted without written permission of NFPA. For inquires or to report unauthorized use, contact licensing@nfpa.org.

3.3.104 Service Counter Fire Door. A labeled assembly consisting of a rolling steel fire door that incorporates a four-sided frame used for the protection of openings in walls where the primary purpose of the opening is for nonpedestrian use, such as counter service for food, a pharmaceutical dispensary, package and baggage transfer, or observation ports.

3.3.105 Shutter. A labeled door assembly that is used for the protection of a window opening in an exterior wall. *(See also 3.3.63, Fire Shutter.)*

3.3.106 Side Guide Cable System. A continuous vertical cable at each vertical edge of the curtain used to guide and restrain the fire safety curtain.

3.3.107 Side Light. An opening in a fire door frame alongside the fire door opening that is filled with glazing material.

3.3.108* Side Light Frame. A fire door frame prepared for the application of a glazing material alongside the door opening.

3.3.109* Side Panel Frame. A door frame prepared for the installation of a fixed solid metal or wood panel alongside the door opening.

3.3.110 Sill. The bottom part of an opening over which a fire door closes.

3.3.111 Sill (Rolling Steel Fire Door). The bottom part of an opening onto which the door curtain and bottom bar come to rest when in the closed position.

3.3.112 Sill (Service Counter Fire Door). The bottom part of a frame onto which the door curtain and bottom bar come to rest when in the closed position.

3.3.113 Single-Point Latch. A latch located in the edge of a door to engage either in the frame or in the edge of the inactive leaf of a pair of doors.

3.3.114 Sliding Hardware. A system of rails, hangers, rollers, guides, binders, and closing devices that are self-closing by means of gravity, weights, and pulleys or spring-actuated devices.

3.3.115 Smoke Damper. A device within an air distribution system to control the movement of smoke.

3.3.116 Smoke Detector. A device that detects visible or invisible particles of combustion. [**72**, 2013]

3.3.117 Spring Hinge. A closing device in the form of a hinge with a built-in spring used to hang and close the door.

3.3.118 Spring Release Device (Rolling Steel Door). A device that, when activated, releases part of the spring counterbalancing force and causes the door to close.

3.3.119 Static System. An HVAC system designed to stop the movement of air within the system at the indication of a fire.

3.3.120 Stay Chain. A chain used to support the fire safety curtain.

3.3.121 Stay Rollers (Sliding Door, Horizontal). A device used on horizontally sliding doors at their back lower corners to guide the door and prevent the door from moving away from the wall under fire conditions.

3.3.122 Strike.

3.3.122.1 ***Electric Strike.*** A strike that, when activated, either releases or retains a projected latch or dead bolt.

3.3.122.2 ***Open Back Strike.*** A strike applied to the inactive leaf of a pair of doors and cut away at the back to allow either leaf to open or close independently.

3.3.123 Strike Plate. A wear plate for projecting hardware or a wear plate and keeper for a latch bolt.

3.3.124 Struts. Adjustable vertical members that extend from the head of the hollow metal door frame to the ceiling to hold the frame rigidly in place.

3.3.125 Temperature Rise. The temperature increase above ambient that has developed on the unexposed face of the fire door assembly at the end of 30 minutes of exposure to the standard fire test.

3.3.126 Track Brackets (Sliding Doors). Hardware bolted to the wall that serves to support the track.

3.3.127 Transom. An opening in a fire door frame above the door opening that is filled by a solid panel or with glazing material.

3.3.128* Transom and Side Light Frame. A fire door frame prepared for the application of a glazing material above and alongside the door opening.

3.3.129* Transom and Side Panel Frame. A fire door frame prepared for the application of solid metal or wood panels above and alongside the door opening.

3.3.130* Transom Light Frame. A fire door frame prepared for the application of a glazing material above the door opening that has a horizontal member such as a transom bar provided to separate the glazed opening from the door opening.

3.3.131 Transom Panel. A panel, fixed or removable, installed in a frame above the door.

3.3.132* Transom Panel Frame. A fire door frame prepared for the application of a transom panel above the door opening that has a horizontal member such as a transom bar provided to separate the transom opening from the door opening unless the transom panel or the bottom of the panel and the top of the door are rabbetted.

3.3.133 Undercutting. Trimming the lowest edge of a door panel for clearance.

3.3.134 Vent (Sliding Door, Vertical and Horizontal Tin-Clad Only). A hole cut in a fire door to allow for venting of the products of combustion.

3.3.135 Vertical Guide Pocket. A partial enclosure at the vertical edge of the proscenium that protects the vertical edges and guides of a fire safety curtain.

3.3.136 Vertically Sliding Door. Labeled single-piece doors and sectional doors operating in a vertical direction.

3.3.137 Viewer. A viewing device installed in a door to allow observation of persons opposite the security side of the door without having to open the door.

3.3.138 Volume Control Damper. A fire damper, smoke damper, or combination fire/smoke damper that is also used to control the volume of air in an HVAC system.

3.3.139 Wedge (Sliding Door, Horizontal Tin-Clad and Flush Sheet Metal). A plate mounted on the face of a sliding door designed to force the door against the wall.

3.3.140 Window. Integral fabricated units, placed in an opening in a wall, primarily intended for the admission of light, or

Copyright 2014 National Fire Protection Association (NFPA). Licensed, by agreement, for individual use and download on October 4, 2014 to LEADER and READER for designated user PATTARAPORN SRITRAKOOL. No other reproduction or transmission in any form permitted without written permission of NFPA. For inquires or to report unauthorized use, contact licensing@nfpa.org.

light and air, and not intended primarily for human entrance or exit.

3.3.141 Window Frame. The perimeter of a window.

3.3.142 Window Sash. The horizontal or vertical sliding component of a window.

3.3.143 Window Ventilator. The part of a projected window, casement window, or pivoted window that opens.

3.3.144 Wire Glazing Clips. Small, spring wire clips used to hold glass in place where windows are glazed only with glazing compound.

Chapter 4 General Requirements

4.1 General Limitations.

4.1.1 Classification. Fire doors and fire windows shall be classified by designating a required fire protection rating expressed in hours or fractions thereof. *(See Annex D.)*

4.1.2* Fusible Links.

4.1.2.1 The particular fusible link used shall depend on the temperature and load requirements of the application.

4.1.2.2 Multiple links shall be permitted to be used to meet the load rating requirements where the load rating of a single link is exceeded.

4.1.3 Appurtenances.

4.1.3.1 Preparation of fire door assemblies for locks, latches, hinges, remotely operated or remotely monitored hardware, concealed closers, glass lights, vision panels, louvers, astragals and split astragals, and the application of plant-ons and laminated overlays shall be performed in accordance with the manufacturer's inspection service procedure and under label service. *(See Annex E and Annex F.)*

4.1.3.2 For job site preparation of surface-applied hardware, function holes for mortise locks, and holes for labeled viewers, a maximum ¾ in. (19 mm) wood and composite door undercutting, and protection plates *(see 6.4.5)* shall be permitted.

4.1.3.3 Surface-applied hardware shall be applied to the door or frame without removing material other than drilling round holes to accommodate cylinders, spindles, similar operational elements, and through-bolts in doors.

4.1.3.4 The holes described in 4.1.3.3 shall not be permitted to exceed a diameter of 1 in. (25.4 mm), with the exception of cylinders.

4.1.4 Signage. Informational signs shall be permitted to be installed on the surfaces of fire doors in accordance with 4.1.4.1 through 4.1.4.4 or in accordance with the manufacturer's published listing.

4.1.4.1 The total area of all attached signs shall not exceed 5 percent of the area of the face of the fire door to which they are attached.

4.1.4.2 Means of Attachment.

4.1.4.2.1 Signs shall be attached to fire doors by use of an adhesive.

4.1.4.2.2 Mechanical attachments such as screws or nails shall not be permitted.

4.1.4.3 Signs shall not be installed on glazing material in fire doors.

4.1.4.4 Signs shall not be installed on the surface of fire doors so as to impair or otherwise interfere with the proper operation of the fire door.

4.1.5 Sliding Doors.

4.1.5.1 Sliding doors shall be permitted to have integral swinging doors.

4.1.5.2 Where sliding doors include an integral swinging door, they shall be permitted to be used on exits to the exterior of the building.

4.2 Listed and Labeled Products. *(See 3.2.3 and 3.2.4 for definitions.)*

4.2.1* Listed items shall be identified by a label.

4.2.2 Labels shall be applied in locations that are readily visible and convenient for identification by the AHJ after installation of the assembly.

4.2.3 The label or the listing shall be considered evidence that samplings of such devices or materials have been evaluated by tests and that such devices or materials are produced under an in-plant, follow-up inspection program.

4.2.4 Specification of items of a generic nature, such as hinges, that are not labeled shall comply with the specifications contained in this standard.

4.2.5 Components.

4.2.5.1 A fire door assembly shall consist of components that are separate products incorporated into the assembly and are allowed to have their own subcomponents.

4.2.5.2* Except where restricted by individual published listings, a fire door assembly shall be permitted to consist of the labeled, listed, or classified components of different organizations that are acceptable to the AHJ.

4.3 Classifications and Types of Doors.

4.3.1* Only labeled fire doors shall be used.

4.3.2 Swinging fire doors shall be permitted to be furnished separately from labeled door frames and builders hardware if the complete fire door assembly, including the door, frame, and builders hardware, comprises a labeled fire door assembly.

4.3.3 Fire doors furnished with or prepared for fire exit hardware shall bear a label stating "Fire Door to Be Equipped with Fire Exit Hardware."

4.3.4 The label described in 4.3.3 shall address the reinforcements necessary for the exit devices, and the complete fire door assembly shall have been tested for egress panic load requirements.

4.3.5 Rolling steel fire doors shall be labeled and shall be furnished as a complete assembly that includes curtain, bottom bar, barrel, guides, brackets, hood, automatic closing device, and any other components required by their listing for a complete assembly.

4.3.6 Elevator doors shall be in accordance with Section 14.2.

4.3.7 Access-type door assemblies shall consist of single swinging steel doors with frames, self-latching devices, and closing mechanisms.

Copyright 2014 National Fire Protection Association (NFPA). Licensed, by agreement, for individual use and download on October 4, 2014 to LEADER and READER for designated user PATTARAPORN SRITRAKOOL. No other reproduction or transmission in any form permitted without written permission of NFPA. For inquires or to report unauthorized use, contact licensing@nfpa.org.

4.3.8 Service counter doors shall be of the single- or two-speed counterbalanced types of flush design or the rolling steel type of formed steel and shall include wall guides, frame, sill, latching, and counterbalancing mechanism.

4.3.9* AHJs shall be consulted for information on the size of oversize doors that shall be permitted in a given location.

4.4 Glazing Material in Fire Doors.

4.4.1* Only labeled fire resistance–rated or fire protection–rated glazing material shall be used in fire door assemblies when permitted by the door listing. *(See A.3.3.56, Fire Protection Glazing.)*

4.4.2 Fire protection glazing and fire resistance glazing shall meet all applicable impact safety standards.

4.4.3* Glazing materials in vision panels shall be installed in labeled glass light kits or in accordance with the fire door listing and shall be installed in accordance with the manufacturer's installation instructions.

4.4.3.1* For new wood doors, glazing materials in vision panels shall be installed in labeled glass light kits or in accordance with the fire door listing and shall be installed in accordance with inspection service procedure and under label service.

4.4.4* Fire protection glazing not exceeding 100 in.^{2} (0.065 m^2) shall be permitted in fire doors having a 3-hour fire protection rating or in fire doors having a 1½-hour fire protection rating for use in severe exterior fire exposure locations where the fire protection glazing has been tested for the desired rating period with no through-openings in accordance with NFPA 252, *Standard Methods of Fire Tests of Door Assemblies.*

4.4.5* Glazing material shall be permitted in fire doors having the fire protection ratings shown in Table 4.4.5 when tested in accordance with NFPA 252, *Standard Methods of Fire Tests of Door Assemblies*, and shall be limited in size and area in accordance with Table 4.4.5.

Table 4.4.5 Fire Door Rating

Fire Door Rating (hr)	Maximum Area of Glazing (per Door Leaf[a])
½, ⅓	Limited to maximum area tested
¾	Limited to maximum area tested[b]
1[c], 1½ [a,c]	Limited to maximum area tested
3[a]	100 in.^{2} (0.065 m^2)

[a]See also requirements in 4.4.4.
[b]See 4.4.5.1.
[c]Fire protection–rated glazing materials exceeding 100 in.^{2} (0.065 m^2) in area are not permitted in temperature rise–rated doors.

4.4.5.1 Maximum area of individual exposed lights shall be 1296 in.^{2} (0.84 m^2) with no dimension exceeding 54 in. (1.37 m) unless otherwise tested.

4.4.6 Each individual glazing unit shall be identified with a label that is visible after installation.

4.4.7 Viewers in fire doors shall be labeled.

4.5 Fire Resistance–Rated Glazing in Doors and Windows. Fire resistance–rated glazing that limits the temperature rise on the unexposed surface and withstands the impact of the hose stream test as required for walls for the required duration in accordance with ASTM E119, *Standard Test Methods for Fire Tests of Building Construction and Materials*, and is subsequently tested in accordance with NFPA 252, *Standard Methods of Fire Tests of Door Assemblies*, or NFPA 257, *Standard on Fire Test for Window and Glass Block Assemblies*, shall be permitted in fire doors or windows having a fire protection rating of 1½ hours or less and shall be limited to the maximum area tested. See also the requirements in 6.3.3.3 and 6.3.3.4. *(See Annex D.)*

4.6 Classification of Hardware for Fire Doors.

4.6.1 Hardware required for the installation of all types of fire doors shall be as specified in those sections covering installation.

4.6.2 Hardware for fire doors shall be referred to as builders hardware or fire door hardware.

4.6.2.1 Fire exit hardware shall be within the category of builders hardware.

4.6.3 In this standard, builders hardware shall be applied only to swinging doors.

4.6.3.1* Builders hardware shall include hinges (full mortise, half mortise, half surface, full surface, olive knuckle, paumelle, or spring), single-, two-, or three-point locks and latches, top and bottom bolts (flush, surface, or concealed), and door closers.

4.6.3.2 Builders hardware shall not be required to be shipped from the factory with the fire doors.

4.6.3.3* Fire exit hardware shall consist of exit devices that have been labeled for both fire and panic protection.

4.6.4* Fire door hardware shall be applied to both swinging and sliding doors.

4.6.4.1 Fire door hardware that is applied to swinging doors shall consist of surface-mounted strap hinges, surface-applied latches, and closing devices.

4.6.4.2 In this standard, all hardware for sliding doors shall be fire door hardware.

4.6.4.3 Fire door hardware shall be shipped from the factory with the fire door.

4.7 Placement of Detectors.

4.7.1 All detectors, including fusible links, shall be placed as shown in Figure 4.7.1(a) and Figure 4.7.1(b), but in no event shall detectors be placed in the dead air space shown in Figure 4.7.1(a).

4.7.2 Detectors for the release of fire doors shall be permitted to be part of an overall system, such as a fire alarm, water flow alarm, or carbon dioxide release system, that releases the door.

4.7.3 Where smoke detectors are used, they shall be located in accordance with *NFPA 72, National Fire Alarm and Signaling Code.*

4.7.4 Detectors and their components shall be installed in accordance with the manufacturers' instructions.

4.7.5* Unless otherwise acceptable to the AHJ, heat detectors or fusible links shall be installed on both sides of the wall, interconnected so that the operation of any single detector or fusible link causes the door to close.

4.7.5.1* Where fusible links are used, one fusible link shall be located near the top of the opening, and additional links shall be located at or near the ceiling on each side of the wall.

Copyright 2014 National Fire Protection Association (NFPA). Licensed, by agreement, for individual use and download on October 4, 2014 to LEADER and READER for designated user PATTARAPORN SRITRAKOOL. No other reproduction or transmission in any form permitted without written permission of NFPA. For inquires or to report unauthorized use, contact licensing@nfpa.org.

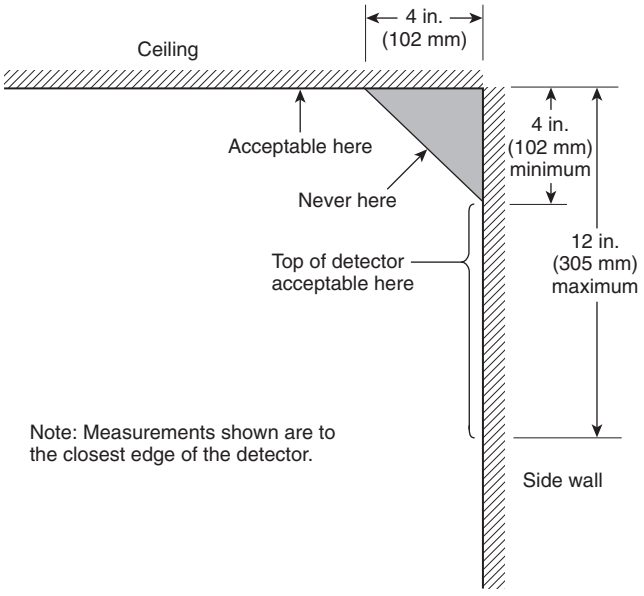

FIGURE 4.7.1(a) Proper Placement of Detectors.

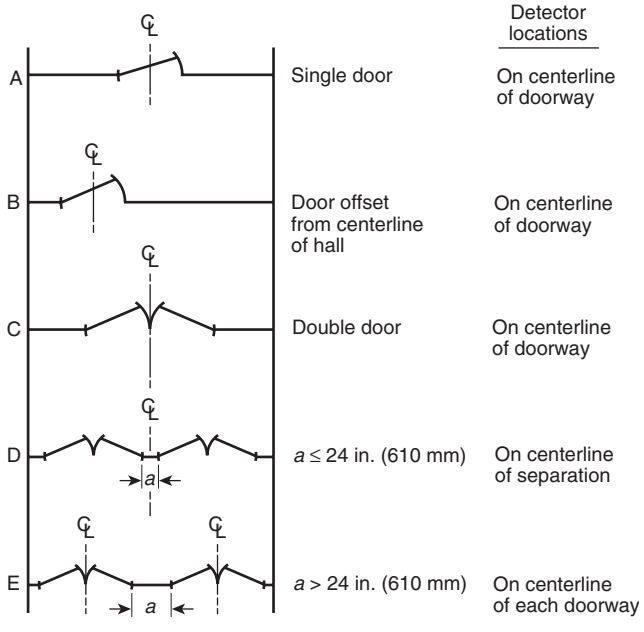

FIGURE 4.7.1(b) Detector Locations.

4.7.5.1.1 Where fusible links are installed on both sides of the wall, a sleeve shall be installed through the wall to provide an open pathway for the cable or chain connecting the fusible links.

4.7.5.1.2 The sleeve shall be a ½ in. (13 mm) diameter galvanized steel conduit or pipe, with ends de-burred, and fitted with a collar or bushing at each end to secure the sleeve around the wall and allow free movement of the cable or chain through the sleeve upon fusing of the links.

4.8 Supporting Construction.

4.8.1 Walls.

4.8.1.1 Walls shall be plumb and true, present smooth surfaces, and have a fire resistance rating as required by the AHJ.

4.8.1.2 Walls shall be of brick, concrete, or concrete masonry unit construction except that, where hollow concrete masonry units are used, all hollow cells within a minimum of 16 in. (406 mm) of the opening shall be filled with concrete.

4.8.1.3* Where hollow concrete masonry units are used and where tin-clad and sheet metal (corrugated) doors are mounted, the wall openings shall be reinforced to provide anchorage for door-mounting hardware equal to that of brick or concrete.

4.8.1.4* For tin-clad and sheet metal (corrugated) doors, continuous steel-bearing plates (crush plates) of 3⁄16 in. × 3 in. (4.76 mm × 76.2 mm) minimum dimensions shall be permitted to be used to bridge the cavities and to prevent the through-wall bolts from crushing the hollow blocks.

4.8.1.5 Door assemblies shall be used on walls of other construction only if listed for such installation.

4.8.2 Sills.

4.8.2.1 In buildings with noncombustible floors, a sill shall not be required, provided the floor structure is extended through the door opening.

4.8.2.2 In buildings with combustible floors or combustible floor coverings, a sill shall be required if the floor structure is extended through the door opening, as combustible floor construction shall not be permitted to extend through the door opening.

4.8.2.3 Door openings required to be protected by ½-hour or ⅓-hour rated fire protection door assemblies shall be exempted from the requirements of 4.8.2.2.

4.8.2.4 Sills shall be constructed of noncombustible materials.

4.8.2.5* For swinging doors with builders hardware and special-purpose horizontally sliding accordion or folding doors with frames having a jamb depth of 4 in. (102 mm) or less, the sill width shall be equal to the jamb depth.

4.8.2.6* Where frames have a greater jamb depth, the sills shall have a minimum width of 4 in. (102 mm) and shall be installed so that the sill extends from the face of the frame on the door side into the frame.

4.8.2.7 For swinging doors with fire door hardware, sills shall extend at least the depth of the door frame for flush-mounted doors.

4.8.2.8* For lap-mounted doors, sills shall extend beyond the opening for a length equal to the projection of the installed door or doors.

4.8.2.9* For horizontally sliding fire doors and vertically sliding fire doors, sills shall be constructed of noncombustible material and shall extend 6 in. (152 mm) past the edge of the opening on each side and 4 in. (102 mm) out from the face of the wall.

4.8.2.10 Rolling Steel Fire Doors. For rolling steel fire doors, sills shall be constructed of noncombustible material, shall extend past each jamb as necessary to be completely under the guides, and shall extend out from the centerline of the guide

Copyright 2014 National Fire Protection Association (NFPA). Licensed, by agreement, for individual use and download on October 4, 2014 to LEADER and READER for designated user PATTARAPORN SRITRAKOOL. No other reproduction or transmission in any form permitted without written permission of NFPA. For inquires or to report unauthorized use, contact licensing@nfpa.org.

groove a minimum of 4 in. (102 mm) on each side to accommodate deflection of the bottom bar.

4.8.2.11 For service counter fire doors, sills shall be provided as part of the fire door assembly.

4.8.2.12 Flush concrete sills shall extend to the wall opening on both sides.

4.8.2.13* For swinging doors with builders hardware, horizontally sliding doors, and special-purpose horizontally sliding accordion or folding doors, raised noncombustible sills or thresholds shall be permitted wherever combustible floor coverings are contemplated or are in use on one or both sides of the door openings.

4.8.3 Lintels.

4.8.3.1 Lintels shall be brick, concrete or masonry arches, steel, or reinforced concrete.

4.8.3.2 Lintels of other types of construction shall be allowed when acceptable to the AHJ.

4.8.4 Clearance.

4.8.4.1* The clearance under the bottom of a door shall be a maximum of ¾ in. (19 mm).

4.8.4.2 Where the bottom of the door is more than 38 in. (965 mm) above the finished floor, the maximum clearance shall not exceed ⅜ in. (9.5 mm) or as specified by the manufacturer's label service procedure.

4.8.5 Floor Coverings.

4.8.5.1 Combustible floor coverings shall be permitted to extend through openings required to be protected by 1½-hour, 1-hour, or ¾-hour rated fire protection fire door assemblies without a sill where they have a minimum critical radiant flux of 0.22 W/cm^2 in accordance with NFPA 253, *Standard Method of Test for Critical Radiant Flux of Floor Covering Systems Using a Radiant Heat Energy Source*.

4.8.5.2 Combustible floor coverings shall not extend through openings protected by 3-hour rated fire protection door assemblies.

4.8.6* Where permitted by the individual door assembly listing, expansion anchors used in concrete, brick, or filled concrete masonry unit walls shall meet the following conditions:

(1) Expansion anchors shall be manufactured from steel and shall be zinc-coated or cadmium-coated.
(2) Expansion anchors shall conform to Federal Specification A-A-1923A, *Shield Expansion (Lag, Machine and Externally Threaded Wedge)*; A-A-1924A, *Shield, Expansion (Self Drilling Tubular Expansion Shell Bolt)*; or A-A-55614, *Shield, Expansion (Non-Drilling Expansion Anchors)*.
(3) The compressive strength of the concrete shall not be less than 2000 psi (13,790 kPa), and the bolt load shall not exceed ¼ of the proof test load.
(4) Where used in brick or filled concrete masonry unit walls, the bolt load shall not exceed 1/12 of the proof test load.
(5) No expansion anchor shall be set closer to the edge of the wall opening than 6 times the diameter of the anchor or closer to another anchor than 8 times the diameter of the anchor.

Chapter 5 Care and Maintenance

5.1* General.

5.1.1 Application.

5.1.1.1* This chapter shall cover the inspection, testing, and maintenance of fire doors, fire shutters, fire windows, and opening protectives other than fire dampers and fabric fire safety curtains.

5.1.1.2 The requirements of this chapter shall apply to new and existing installations.

5.1.2 Operability.

5.1.2.1 Doors, shutters, and windows shall be operable at all times.

5.1.2.2 Doors, shutters, and windows shall be kept closed and latched or arranged for automatic closing.

5.1.3 Replacement. Where it is necessary to replace fire doors, shutters, windows or their frames, glazing materials, hardware, and closing mechanisms, replacements shall meet the requirements for fire protection and shall be installed and tested as required by this standard for new installations.

5.1.4 Field Modifications.

5.1.4.1* In cases where a field modification to a fire door or a fire door assembly is desired, and is not permitted by 4.1.3.2 through 4.1.3.4, the laboratory with which the product or component being modified is listed shall be contacted through the manufacturer and a written or graphic description of the modifications shall be presented to that laboratory.

5.1.4.2 Field modifications shall be permitted without a field visit from the laboratory upon written authorization from that laboratory.

5.1.4.3 When the manufacturer is no longer available, the laboratory shall be permitted to provide an engineering evaluation supporting the field modification.

5.1.5 Removal of Door or Window. Where a fire door or fire window opening no longer functions as an opening, or the door or window is removed and not replaced, the opening shall be filled to maintain the required rating of the wall assembly.

5.2* Inspection and Testing.

5.2.1* Upon completion of the installation, door, shutters, and window assemblies shall be inspected and tested in accordance with 5.2.4.

5.2.2* A record of all inspections and testing shall be signed by the inspector and kept for inspection by the AHJ.

5.2.2.1 Records of acceptance tests shall be retained for the life of the assembly.

5.2.2.2* Unless a longer period is required by Section 5.4, records shall be retained for a period of at least 3 years.

5.2.2.3* The records shall be on a medium that will survive the retention period. Paper or electronic media shall be permitted. [**72**:14.6.2.3]

5.2.2.4 A record of all inspections and testing shall be provided that includes, but is not limited to, the following information:

(1) Date of inspection
(2) Name of facility

Copyright 2014 National Fire Protection Association (NFPA). Licensed, by agreement, for individual use and download on October 4, 2014 to LEADER and READER for designated user PATTARAPORN SRITRAKOOL. No other reproduction or transmission in any form permitted without written permission of NFPA. For inquires or to report unauthorized use, contact licensing@nfpa.org.

(3) Address of facility
(4) Name of person(s) performing inspections and testing
(5) Company name and address of inspecting company
(6) Signature of inspector of record
(7) Individual record of each inspected and tested fire door assembly
(8)*Opening identifier and location of each inspected and tested fire door assembly
(9)*Type and description of each inspected and tested fire door assembly
(10)*Verification of visual inspection and functional operation
(11) Listing of deficiencies in accordance with 5.2.3, Section 5.3, and Section 5.4

5.2.2.5* Upon completion of maintenance work, fire door assemblies shall be inspected and tested in accordance with 5.2.3.

5.2.3 Acceptance Testing.

5.2.3.1* Acceptance testing of fire door and window assemblies shall be performed by a qualified person with knowledge and understanding of the operating components of the type of assembly being subject to testing.

5.2.3.2* Before testing, a visual inspection shall be performed to identify any damaged or missing parts that can create a hazard during testing or affect operation or resetting.

5.2.3.3 Acceptance testing shall include the closing of the door by all means of activation.

5.2.3.4 A record of these inspections and testing shall be made in accordance with 5.2.2.

5.2.3.5 Swinging Doors with Builders Hardware or Fire Door Hardware.

5.2.3.5.1 Fire door assemblies shall be visually inspected from both sides to assess the overall condition of door assembly.

5.2.3.5.2 As a minimum, the following items shall be verified:

(1) Labels are clearly visible and legible.
(2) No open holes or breaks exist in surfaces of either the door or frame.
(3) Glazing, vision light frames, and glazing beads are intact and securely fastened in place, if so equipped.
(4) The door, frame, hinges, hardware, and noncombustible threshold are secured, aligned, and in working order with no visible signs of damage.
(5) No parts are missing or broken.
(6) Door clearances do not exceed clearances listed in 4.8.4 and 6.3.1.7.
(7) The self-closing device is operational; that is, the active door completely closes when operated from the full open position.
(8) If a coordinator is installed, the inactive leaf closes before the active leaf.
(9) Latching hardware operates and secures the door when it is in the closed position.
(10) Auxiliary hardware items that interfere or prohibit operation are not installed on the door or frame.
(11) No field modifications to the door assembly have been performed that void the label.
(12) Meeting edge protection, gasketing and edge seals, where required, are inspected to verify their presence and integrity.
(13) Signage affixed to a door meets the requirements listed in 4.1.4.

5.2.3.6 Horizontally Sliding, Vertically Sliding, and Rolling Doors.

5.2.3.6.1 Fire door assemblies shall be visually inspected from both sides to assess the overall condition of door assembly.

5.2.3.6.2 The following items shall be verified:

(1) Labels are clearly visible and legible.
(2) No open holes or breaks exist in surfaces of either the door or frame.
(3) Slats, endlocks, bottom bar, guide assembly, curtain entry, hood, and flame baffle are correctly installed and intact, for rolling steel fire doors.
(4) Glazing, vision light frames, and glazing beads are intact and securely fastened in place, if so equipped.
(5) Curtain, barrel, and guides are aligned, level, plumb, and true for rolling steel fire doors.
(6) Expansion clearance is maintained in accordance with manufacturer's listing.
(7) Drop release arms and weights are not blocked or wedged.
(8) Mounting and assembly bolts are intact and secured.
(9) Attachments to jambs are with bolts, expansion anchors, or as otherwise required by the listing.
(10) Smoke detectors, if equipped, are installed and operational.
(11) No parts are missing or broken.
(12)*Fusible links, if equipped, are in the location; chain/cable, s-hooks, eyes, and so forth, are in good condition; the cable or chain are not kinked, pinched, twisted, or inflexible; and links are not painted or coated with dust or grease.
(13) Auxiliary hardware items that interfere or prohibit operation are not installed on the door or frame.
(14) No field modifications to the door assembly have been performed that void the label.
(15) Doors have an average closing speed of not less than 6 in./sec (152 mm/sec) or more than 24 in./sec (610 mm/sec).

5.2.3.7 Closing Devices.

5.2.3.7.1 All fire doors, fire shutters, and fire window assemblies shall be inspected and tested to check for proper operation and full closure.

5.2.3.7.2 Resetting of the automatic-closing device shall be done in accordance with the manufacturer's instructions.

5.2.3.7.3 Rolling Steel Fire Doors.

5.2.3.7.3.1 Rolling steel fire doors shall be drop-tested twice.

5.2.3.7.3.2 The first test shall be to check for proper operation and full closure.

5.2.3.7.3.3 A second test shall be done to verify that the automatic-closing device has been reset correctly.

5.2.3.8* Fusible links, release devices, and any other moveable parts shall not be painted or coated with other materials that could interfere with the operation of the assembly.

5.2.4 Periodic Inspection and Testing.

5.2.4.1* Periodic inspections and testing shall be performed not less than annually.

5.2.4.2 As a minimum, the provisions of 5.2.3 shall be included in the periodic inspection and testing procedure.

Copyright 2014 National Fire Protection Association (NFPA). Licensed, by agreement, for individual use and download on October 4, 2014 to LEADER and READER for designated user PATTARAPORN SRITRAKOOL. No other reproduction or transmission in any form permitted without written permission of NFPA. For inquires or to report unauthorized use, contact licensing@nfpa.org.

5.2.4.3 Inspection shall include an operational test for automatic-closing doors and windows to verify that the assembly will close under fire conditions.

5.2.4.4 The assembly shall be reset after a successful test.

5.2.4.5 Resetting of the release mechanism shall be done in accordance with the manufacturer's instructions.

5.2.4.6* Hardware shall be examined, and inoperative hardware, parts, or other defective items shall be replaced without delay.

5.2.4.7 Tin-clad and kalamein doors shall be inspected for dry rot of the wood core.

5.2.4.8 Chains or cables employed shall be inspected for excessive wear, stretching, and binding.

5.3 Retrofit Operators.

5.3.1 The operator, governor, and automatic-closing device on rolling steel fire doors shall be permitted to be retrofitted with a labeled retrofit operator under the conditions specified in 5.3.2 through 5.3.5.

5.3.2 The retrofit operator shall be labeled as such.

5.3.3 The retrofit operator shall be installed in accordance with its installation instructions and listing.

5.3.4 The installation shall be acceptable to the AHJ.

5.3.5 The retrofit operator shall be permitted to be provided by a manufacturer other than the original manufacturer of the rolling steel fire door on which it is retrofitted, provided its listing allows it to be retrofitted on that manufacturer's doors.

5.4* Performance-Based Option.

5.4.1 As an alternate means of compliance with 5.2.4, subject to the AHJ, fire door assemblies shall be permitted to be inspected, tested, and maintained under a written performance-based program.

5.4.2 Goals established under a performance-based program shall provide assurance that the fire door assembly will perform its intended function when exposed to fire conditions.

5.4.3 Technical justification for inspection, testing, and maintenance intervals shall be documented in writing.

5.4.4 The performance-based option shall include historical data acceptable to the AHJ.

5.5 Maintenance.

5.5.1* Repairs shall be made, and defects that could interfere with operation shall be corrected without delay.

5.5.2 Damaged glazing material shall be replaced with labeled glazing.

5.5.3 Replacement glazing materials shall be installed in accordance with their individual listing.

5.5.4 Any breaks in the face covering of doors shall be repaired without delay.

5.5.5 Where a fire door, frame, or any part of its appurtenances is damaged to the extent that it could impair the door's proper emergency function, the following actions shall be performed:

(1) The fire door, frame, door assembly, or any part of its appurtenances shall be repaired with labeled parts or parts obtained from the original manufacturer.
(2) The door shall be tested to ensure emergency operation and closing upon completion of the repairs.

5.5.6 If repairs cannot be made with labeled components or parts obtained from the original manufacturer or retrofitted in accordance with Section 5.3, the fire door frame, fire door assembly, or appurtenances shall be replaced.

5.5.7 When holes are left in a door or frame due to changes or removal of hardware or plant-ons, the holes shall be repaired by the following methods:

(1) Install steel fasteners that completely fill the holes
(2) Fill the screw or bolt holes with the same material as the door or frame

Chapter 6 Swinging Doors with Builders Hardware

6.1 Doors.

6.1.1 General. This chapter shall cover the installation of swinging doors with builders hardware.

6.1.2 Mounting of Doors. Swinging composite, hollow metal, flush sheet metal, metal-clad (kalamein), and wood core doors with builders hardware shall be flush mounted in labeled door frames.

6.1.3 Operation of Doors. All swinging doors shall be closed and latched at the time of fire.

6.1.3.1 For the purposes of 6.1.3, the operation of doors shall be divided into the following categories:

(1) Self-closing doors
(2) Automatic-closing doors
(3) Power-operated fire doors

6.1.3.2 Self-Closing Doors.

6.1.3.2.1 Self-closing doors shall swing easily and freely and shall be equipped with a closing device to cause the door to close and latch each time it is opened.

6.1.3.2.2 The closing mechanism shall not have a hold-open feature.

6.1.3.3 Automatic-Closing Doors. Automatic-closing doors shall be permitted to close automatically by means of the installation of a closing device and one of the following:

(1) A separate, labeled, fail-safe door holder/release device or a hold-open mechanism that shall be permitted to be an integral part of the basic closing device
(2) An integral closing device that allows the door to swing freely and that automatically closes the door during an alarm condition, provided the hold-open mechanisms are released by one or a combination of automatic fire detectors acceptable to the AHJ

6.1.3.3.1 The fire door shall latch upon closure.

6.1.3.4 Power-Operated Fire Doors. Power-operated fire doors shall be equipped with a releasing device that shall automatically disconnect the power operator at the time of fire, allowing a self-closing or automatic device to close and latch the door regardless of power failure or manual operation.

6.2 Supporting Construction.

6.2.1 Walls. Wall openings shall be constructed to readily accept the fire door frame.

Copyright 2014 National Fire Protection Association (NFPA). Licensed, by agreement, for individual use and download on October 4, 2014 to LEADER and READER for designated user PATTARAPORN SRITRAKOOL. No other reproduction or transmission in any form permitted without written permission of NFPA. For inquires or to report unauthorized use, contact licensing@nfpa.org.

6.2.1.1 The frame shall be considered to be non–load bearing except where specifically designed to carry loads.

6.2.1.2 Frames shall be anchored securely to the wall construction.

6.2.2 Sills. Sills shall be installed in accordance with 4.8.2.

6.2.3 Lintels. Separate reinforcing units shall be provided for pressed steel door frames, where necessary, to support overhead wall loads over door openings.

6.3 Openings.

6.3.1 Door Frames.

6.3.1.1* Only labeled door frames shall be used.

6.3.1.2* Methods of anchoring shall be as shown in the listing.

6.3.1.3* Door frames intended for drywall installation shall be of the flush butt–mounted or wrap-around type, and anchors shall be secured in accordance with the manufacturer's instructions.

6.3.1.4* Proprietary-type slip-on door frames shall be installed in accordance with the manufacturer's installation instructions.

6.3.1.5 Door frames provided with expansion bolt–type anchors shall be installed in masonry walls only.

6.3.1.6 Steel-faced composite, hollow metal, metal-clad (kalamein), and flush sheet metal doors shall be installed in pressed steel or steel channel frames.

6.3.1.7* Clearances.

6.3.1.7.1 The clearances between the top and vertical edges of the door and the frame, and the meeting edges of doors swinging in pairs, shall be ⅛ in. ± 1⁄16 in. (3.18 mm ± 1.59 mm) for steel doors and shall not exceed ⅛ in. (3.18 mm) for wood doors.

6.3.1.7.2 Clearances shall be measured from the pull face of the door(s).

6.3.2 Frames for Lights or Panels. Where a frame assembly consists of both solid panels and glazed lights, the fire protection rating shall be based on the glazed area.

6.3.3 Frames for Transom Lights, Side Lights, or Both.

6.3.3.1 Transom or side lights shall be fixed.

6.3.3.2 Multiple-section transom and side light frames *(see G.10.3)* shall be field assembled using the assembly methods that are in accordance with the manufacturer's installation instructions.

6.3.3.3 Frames with transom lights, side lights, or both shall be permitted where a fire protection rating of ¾ hour or less is required.

6.3.3.4 Frames with transom lights, side lights, or both, installed with fire resistance–rated glazing tested as an assembly in accordance with ASTM E119, *Standard Test Methods for Fire Tests of Building Construction and Materials*, shall be permitted where a fire protection rating exceeding ¾ hour is required.

6.3.3.5 Only labeled fire protection glazing or fire resistance glazing shall be used to glaze the light openings.

6.3.4 Frames for Transom or Side Panels.

6.3.4.1 Side panels, transom panels, or both shall be fixed.

6.3.4.2 Removable transom panels shall be permitted to allow for movement of materials or equipment through the opening.

6.3.4.3 Frames with transom panels shall be permitted in situations where fire protection ratings up to and including 3 hours are required.

6.3.4.4 Louvers shall not be installed in either transom or side panels.

6.3.5 Multiple-Opening Door Frames.

6.3.5.1 Individual frames shall be of a maximum size as defined in the manufacturer's published listing but are not to exceed 12 ft 8 in. (3.9 m) in overall width.

6.3.5.2 Where multiple-opening frames are installed adjoining each other in a fire-resistive wall, a 16 in. (406 mm) minimum wall section shall be provided between the frames.

6.3.5.3 The maximum fire protection rating of the door assembly shall not exceed 1½ hours.

6.4 Assembly Components.

6.4.1 Closing Devices.

6.4.1.1* Unless otherwise permitted by the AHJ, a closing device shall be installed on every fire door.

6.4.1.2 Coordinating Device.

6.4.1.2.1 Where there is an astragal or projecting latch bolt that prevents the inactive door from closing and latching before the active door closes and latches, a coordinating device shall be used.

6.4.1.2.2 A coordinating device shall not be required where each door closes and latches independently of the other.

6.4.1.3 All components of closing devices used shall be attached securely to doors and frames by steel screws or through-bolts.

6.4.1.4* All closing mechanisms shall be adjusted to overcome the resistance of the latch mechanism so that positive latching is achieved on each door operation.

6.4.1.5 Where door holder/release devices are used, they shall be labeled.

6.4.2* Application of Door Holder/Release Devices. Door holder/release devices shall be installed in accordance with the manufacturer's instructions and only in conformance with the individual manufacturer's published listings.

6.4.3* Builders Hardware.

6.4.3.1 Hinges and Pivots. Hinges, spring hinges, continuous hinges, and pivots shall be as specified in individual door and hardware manufacturer's published listings or Table 6.4.3.1.

6.4.3.1.1* Doors up to 60 in. (1.52 m) in height shall be provided with two hinges and an additional hinge for each additional 30 in. (0.76 m) of door height or fraction thereof.

6.4.3.1.1.1 The distance between hinges shall be permitted to exceed 30 in. (0.76 m).

6.4.3.1.1.2 Where spring hinges are used, at least two shall be provided.

6.4.3.1.2 All hinges or pivots, except spring hinges, shall be of the ball bearing type.

6.4.3.1.2.1 Hinges or pivots employing other antifriction bearing surfaces shall be permitted if they meet the requirements of ANSI/BHMA A156.1, *Standard for Butts and Hinges*.

Copyright 2014 National Fire Protection Association (NFPA). Licensed, by agreement, for individual use and download on October 4, 2014 to LEADER and READER for designated user PATTARAPORN SRITRAKOOL. No other reproduction or transmission in any form permitted without written permission of NFPA. For inquires or to report unauthorized use, contact licensing@nfpa.org.

Table 6.4.3.1 Builders Hardware: Hinges, Spring Hinges, and Pivots

Maximum Door Rating (hr)	Maximum Door Size				Minimum Hinge Size				Hinge Type
	Width		Height		Height		Thickness		
	ft	m	ft	m	in.	mm	in.	mm	
For 1¾ in. (44.5 mm) or Thicker Doors									
3 or less	4	1.22	10	3.05	4½	114.3	0.180	4.57	Steel, mortise or surface
3 or less	4	1.22	8	2.44	4½	114.3	0.134	3.40	Steel, mortise or surface
1½ or less	3⅛	0.96	8	2.44	6	152.4	0.225	5.72	Steel, olive knuckle or paumelle
3 or less	4	1.22	10	3.05	4	101.6	0.225	5.72	Steel pivots (including top, bottom, and intermediate)
1½ or less	3	0.91	5	1.52	4	101.6	0.130	3.30	Steel, mortise or surface
1½ or less	2	0.61	3	0.91	3	76.2	0.092	2.34	Steel, mortise or surface
3 or less	3	0.91	7	2.13	4½	114.3	0.134	3.40	Steel, mortise or surface (labeled, self-closing, spring type)
3 or less	3	0.91	7	2.13	4	101.6	0.105	2.67	Steel, mortise or surface (labeled, self-closing, spring type)
For 1⅜ in. (34.93 mm) Doors									
3 or less	3	0.91	7	2.13	3½	88.9	0.123	3.12	Steel, mortise or surface
3 or less	2⅔	0.81	7	2.13	3½	88.9	0.105	2.67	Steel, mortise or surface (labeled, self-closing, spring type)

Note: Table 6.4.3.1 lists the most common applications of hinges, spring hinges, and pivots. Consult the door and hardware manufacturer's specific listings for applications not addressed in this table.

6.4.3.1.2.2 Spring hinges shall be labeled and shall meet the requirements of ANSI/BHMA A156.17, *Standard for Self Closing Hinges & Pivots*, Grade 1.

6.4.3.1.3 Hinges 4½ in. (114 mm) high and 0.180 in. (4.57 mm) thick shall be permitted for use on wide and heavy doors or doors that are subjected to heavy use or unusual stress.

6.4.3.1.4 Fire doors with hinges of lighter weight that are not of the ball bearing type shall be permitted under the following conditions:

(1) They are part of a listed assembly.
(2) They meet the test requirements of ANSI/BHMA A156.1, *Standard for Butts and Hinges*.
(3) They have been tested to a minimum of 350,000 cycles.

6.4.3.1.5 Pivot sets consisting of a floor or jamb-mounted bottom pivot and a head mounted top pivot, installed of door leaves up to 90 in. (2.29 m), in height shall have one intermediate pivot.

6.4.3.1.5.1 Pivot sets installed on door leaves greater than 90 in. (2.29 m) in height shall have one additional intermediate pivot for each additional 30 in. (0.76 m) of door height over 90 in. (2.29 m) or fraction thereof.

6.4.3.1.5.2 Where only intermediate pivots are used, two intermediate pivots shall be provided for door leaves up to 60 in. (1.52 m) in height, and an additional intermediate pivot shall be added for each additional 30 in. (0.76 m) of door height or fraction thereof.

6.4.3.1.5.3 Pivot sets made up of components that are smaller or of a lighter gauge than those shown in Table 6.4.3.1 shall be permitted to be used, provided they meet the requirements of ANSI/BHMA A156.4, *Standard for Door Controls (Closers)*, and are in accordance with the manufacturer's label service procedures.

6.4.3.1.6 The length of continuous hinges shall be within 1 in. (25 mm) of the height of the door leaves.

6.4.3.1.7 Continuous hinges shall be labeled and shall meet the requirements of ANSI/BHMA A156.26, *American National Standard for Continuous Hinges*.

6.4.3.2 Attaching Hinges to Doors.

6.4.3.2.1 Hinges shall be secured in accordance with the listing and the manufacturer's installation instructions.

6.4.3.2.2 Mortise hinges shall be secured to reinforcements in the doors with steel machine screws.

6.4.3.2.3 Mortise hinges shall be secured to wood and plastic-covered composite doors or wood core doors with No. 12 × 1¼ in. (31.75 mm) flat, threaded-to-the-head, steel wood screws. Pilot holes shall be drilled that are 5⁄32 in. (4 mm) in diameter.

6.4.3.2.4 Surface hinges shall be attached with steel through-bolts.

6.4.3.3 Attaching Hinges to Frames. Hinges shall be secured to frames with steel screws.

6.4.3.3.1 Types of screws shall be permitted to vary depending on the material used for the manufacture of labeled door frames.

6.4.3.3.2 The manufacturer's instructions and published listings for labeled door frames shall be referenced for specific screw requirements.

6.4.3.4 Shimming. When required to meet the clearances stated in 6.3.1.7, the shimming of hinges using steel shims shall be permitted.

Copyright 2014 National Fire Protection Association (NFPA). Licensed, by agreement, for individual use and download on October 4, 2014 to LEADER and READER for designated user PATTARAPORN SRITRAKOOL. No other reproduction or transmission in any form permitted without written permission of NFPA. For inquires or to report unauthorized use, contact licensing@nfpa.org.

6.4.4 Locks or Latches.

6.4.4.1 Only labeled locks and latches or labeled fire exit hardware (panic devices) meeting both life safety requirements and fire protection requirements shall be used.

6.4.4.2 Fire exit hardware shall be installed only on fire doors bearing a label stating "Fire Door to Be Equipped with Fire Exit Hardware."

6.4.4.2.1 Fire exit hardware shall be labeled for both fire and panic.

6.4.4.2.2 Fire exit hardware shall have a permanently attached label that bears the serial number and shows the manufacturer's name and type of approval.

6.4.4.2.3 The label shall differentiate between panic hardware, which is not acceptable for use on fire doors, and fire exit hardware.

6.4.4.3 All single doors and active leaves of pairs of doors shall be provided with an active latch bolt that cannot be held in a retracted position as specified in the individual manufacturer's published listings.

6.4.4.3.1 Doors other than those used in means of egress shall be permitted to be provided with dead bolts in addition to the active latch bolts or as otherwise permitted by the AHJ.

6.4.4.3.2 Locks with dead bolts that are interconnected with latch bolts and retract when the latch bolt is retracted shall be permitted for use on fire doors within a means of egress.

6.4.4.3.3 Latching arrangements that do not provide positive latching in the normal mode shall be permitted to be used provided that, in a fire emergency, the door becomes positively latched by means of an automatic fail-safe device that is activated by an automatic fire detector. *(See Section 4.7.)*

6.4.4.4 Where both leaves are required for exit purposes, they shall be provided with labeled fire exit hardware.

6.4.4.4.1 Where permitted by the AHJ, pairs of doors not provided with an astragal shall be permitted to have labeled fire exit hardware and an open back strike installed on the inactive leaf, and either labeled fire exit hardware or any labeled latch capable of being opened by one obvious operation from the egress side installed on the active leaf.

6.4.4.5 Where a pair of doors is needed for the movement of equipment and where the inactive leaf of the pair of doors is not required for exit purposes, labeled, top and bottom, self-latching or automatic flush bolts, or labeled two-point latches shall be permitted.

6.4.4.5.1* Manually operated, labeled, top and bottom flush-mounted or surface-mounted bolts on the inactive leaf of a pair of doors shall be permitted to be used where acceptable to the AHJ, provided they do not pose a hazard to safety to life.

6.4.4.6 Throw.

6.4.4.6.1 The throw of single-point latch bolts shall not be less than the minimum shown on the fire door label.

6.4.4.6.2 The minimum throw shall be as specified in the manufacturer's installation instructions.

6.4.4.7 Door Attachments.

6.4.4.7.1 Locks, latches, surface-mounted top and bottom bolts, and fire exit hardware shall be secured to reinforcements in the doors with machine screws or shall be attached with through-bolts.

6.4.4.7.1.1 Pilot holes shall be drilled prior to lock and latch installation, in accordance with manufacturer's installation instructions.

6.4.4.7.2 Flush-mounted top and bottom bolts shall be secured to reinforcements in the doors with machine screws.

6.4.4.7.3 Locks and latches shall be attached to wood and plastic-covered composite doors or wood core doors with not less than No. 8, flat, threaded-to-the-head wood screws or shall be attached with through-bolts.

6.4.4.7.4 Fire exit hardware and surface-mounted top and bottom bolts shall be attached to wood and plastic-covered composite doors with through-bolts or with steel screws at locations specified in the door manufacturer's installation instructions.

6.4.4.8 Strike plates shall be secured to the frame with steel screws or other types of screws as indicated by the manufacturer's published listing or label service procedure.

6.4.4.9 Strike plates for doors swinging in pairs shall be secured to reinforcements in the inactive leaf with machine screws.

6.4.4.9.1 Pilot holes shall be drilled prior to strike plate installation, in accordance with manufacturer's installation instructions.

6.4.4.10* Open back strikes shall be permitted to be used in lieu of conventional strikes only where specifically provided for in the published listings.

6.4.4.11* Electric strikes shall be permitted to be used in lieu of conventional strikes in single swinging doors and pairs of doors where provided for in the published listings.

6.4.5 Protection Plates.

6.4.5.1 Factory-installed protection plates shall be installed in accordance with the listing of the door.

6.4.5.2 Field-installed protection plates shall be labeled and installed in accordance with their listing.

6.4.5.3 Labeling shall not be required where the top of the protection plate is not more than 16 in. (406 mm) above the bottom of the door.

6.4.6 Automatic Louvers. Only labeled fire door louvers shall be used in fire doors.

6.4.7* Astragals.

6.4.7.1 Doors swinging in pairs, where located within a means of egress, shall not be equipped with astragals that inhibit the free use of either leaf.

6.4.7.2* Pairs of doors that require astragals shall have at least one attached in place to project approximately ¾ in. (19 mm) or as otherwise indicated in the individual published listings.

6.4.8 Gasketing. Gasketing on fire doors or frames shall be in accordance with the published listings of the door, frame, or gasketing material manufacturer.

6.5 Application, Installation, and Adjustment.

6.5.1 General. The installation of all components of a fire door assembly shall be in accordance with the listing of each component.

Copyright 2014 National Fire Protection Association (NFPA). Licensed, by agreement, for individual use and download on October 4, 2014 to LEADER and READER for designated user PATTARAPORN SRITRAKOOL. No other reproduction or transmission in any form permitted without written permission of NFPA. For inquires or to report unauthorized use, contact licensing@nfpa.org.

6.5.2 Manufacturers' Instructions. All components shall be installed in accordance with the manufacturers' installation instructions and shall be adjusted to function as described in the listing.

6.5.3 Attachment. All components of a fire door assembly shall be attached firmly to walls, doors, and frames in a manner acceptable to the AHJ.

6.5.4 Mounting. All mounting screws, bolts, or shields shall be steel except where otherwise permitted by this standard.

6.5.5 Anchorage. Attachments to doors with composite cores shall provide firm anchorage for anticipated use.

Chapter 7 Swinging Doors with Fire Door Hardware

7.1 Doors.

7.1.1 General. This chapter shall cover the installation of swinging doors with fire door hardware.

7.1.2 Components. A fire door assembly shall consist of components that are separate products incorporated into the assembly.

7.1.3 Mounting of Doors.

7.1.3.1 Swinging tin-clad doors and flush- or corrugated-type sheet metal doors with fire door hardware shall be flush or lap mounted.

7.1.3.2 Flush-mounted doors shall be hung in steel channel frames securely anchored to the wall construction.

7.1.3.3 Lap-mounted doors shall be hung on the surface of the wall and shall lap the opening at least 4 in. (102 mm) at the top and on each side.

7.1.4 Operation of Doors.

7.1.4.1 The doors shall swing easily and freely on their hinges.

7.1.4.2 The latches shall operate freely.

7.2 Supporting Construction.

7.2.1 Walls.

7.2.1.1 Attachment of the door assembly to the wall shall be by means of through-wall bolts.

7.2.1.2 As an alternative, expansion anchors shall be permitted to be used as specified in 4.8.6.

7.2.2 Sills. Sills shall be installed in accordance with 4.8.2.

7.2.3 Reserved.

7.2.4 Vents.

7.2.4.1 Each tin-clad door formed of 14 in. × 20 in. (360 mm × 510 mm) sheets shall be provided with 3 in. (76.2 mm) diameter vent holes.

7.2.4.2 The vent holes shall be cut through the sheets on the face of the door to be provided with the fire door hardware, using care to avoid interference with the hardware or injury to the wood core when cutting the holes in the sheets.

7.2.4.3 The metal covering around the opening shall be secured with small nails spaced about 1 in. (25.4 mm) apart, and the exposed wood shall be painted thoroughly.

7.3 Openings.

7.3.1 Frames for Lap-Mounted Doors. Frames shall not be required for lap-mounted doors.

7.3.2* Frames for Flush-Mounted Doors.

7.3.2.1 Only labeled frames of the structural steel type shall be used for flush-mounted doors.

7.3.2.2 The frames shall be erected before the wall is built.

7.4 Assembly Components.

7.4.1* Closing Devices for Swinging Tin-Clad and Sheet Metal Fire Doors.

7.4.1.1 Swinging tin-clad and sheet metal fire doors shall be equipped with self-closing or automatic-closing devices to ensure that they are closed and latched at the time of fire.

7.4.1.2 Other arrangements acceptable to the AHJ shall be permitted.

7.4.2 Coordinating Devices.

7.4.2.1 Where there is an astragal or projecting latch bolt that prevents the inactive door of a pair of doors from closing and latching before the active door closes and latches, a coordinating device shall be used.

7.4.2.2 A coordinating device shall not be required where each door closes and latches independent of the other door.

7.4.3 Fire Door Hardware.

7.4.3.1 General.

7.4.3.1.1 Only labeled fire door hardware shall be used.

7.4.3.1.2 The design and construction of typical fire door hardware for swinging fire doors shall be as illustrated in ANSI/UL 14C, *Swing Hardware for Tin-Clad Fire Doors Mounted Singly and in Pairs.*

7.4.3.2 Components. Fire door hardware shall include hinge brackets, hinges, latches, latch keepers, and operating handle mechanisms, and hardware for an inactive door or pairs of doors shall include top and bottom bolts and keepers.

7.4.3.3* Hinges and Latches, Number and Length. The number and length of both the hinges and the latches shall be in accordance with the manufacturer's label service procedure and individual published listing.

7.4.3.4 Attaching Fire Door Hardware to Frames for Flush-Mounted Doors. Hinges and latch keepers shall be bolted, riveted, or welded to the frame.

7.4.3.5 Attaching of Wall Strips for Lap-Mounted Doors.

7.4.3.5.1 Hinges and latch keepers shall be mounted on wall strips bolted to or through the wall *(see 7.2.1)*.

7.4.3.5.2 Bolts of not less than ¾ in. (19.05 mm) shall be used for attaching hinge wall strips, and bolts not less than ½ in. (12.7 mm) shall be used for latch keeper wall strips.

Chapter 8 Horizontally Sliding Doors

8.1 Doors.

8.1.1 General. This chapter shall cover the installation of horizontally sliding doors.

Copyright 2014 National Fire Protection Association (NFPA). Licensed, by agreement, for individual use and download on October 4, 2014 to LEADER and READER for designated user PATTARAPORN SRITRAKOOL. No other reproduction or transmission in any form permitted without written permission of NFPA. For inquires or to report unauthorized use, contact licensing@nfpa.org.

8.1.2 Door Panels.

8.1.2.1 Door panels shall be permitted to be a single section or multiple sections.

8.1.2.2 Connection between the panels shall be in accordance with the manufacturer's instructions and the individual published listing.

8.1.2.3 Tin-clad and metal-clad (kalamein) doors shall not be furnished in more than two sections.

8.1.2.4 Hollow metal or composite doors shall be furnished in not more than five panels, constructed for either field or factory assembly.

8.1.2.5 For biparting doors, not more than four panels shall comprise a single leaf.

8.1.2.6 Personnel swinging-type pass doors shall be permitted to be used if tested with the sliding door and listed in the manufacturer's individual published listing.

8.1.2.7* Pass doors shall be provided with hinges, latchset, spring hinges, or closer.

8.1.3 Mounting of Doors.

8.1.3.1 General.

8.1.3.1.1* Horizontally sliding doors shall be wall mounted in a track attached to a wall or bottom roller mounted with a top guide in accordance with the manufacturer's instructions and individual published listing.

8.1.3.1.2 Doors in detention security applications shall be mounted to a listed detention sliding door device in accordance with the manufacturer's instructions and individual published listing.

8.1.3.1.3 When in the closed position, the clearance between the wall and the door or the frame and the door shall not be more than ¾ in. (19.05 mm) unless otherwise tested and listed in the manufacturer's individual published listings.

8.1.3.2 Lap.

8.1.3.2.1 Unless tested otherwise, doors shall lap openings at least 4 in. (102 mm) at the sides and top.

8.1.3.2.2 Where doors provide protection of openings located in walls above floor level and no projection sill is provided, the doors shall lap the bottom of the opening at least 4 in. (102 mm).

8.1.3.3 Biparting doors shall have an astragal securely attached in place so as to project a minimum of ¾ in. (19.05 mm) unless otherwise required or permitted in the individual manufacturer's published listing.

8.2 Supporting Construction.

8.2.1 Walls.

8.2.1.1 Walls shall be plumb and true and have a fire resistance rating as required by the AHJ.

8.2.1.2* Walls shall be of brick, concrete, or concrete masonry construction except that where tin-clad doors are used on hollow concrete masonry units, the wall opening shall be reinforced to provide anchorage for door-mounting hardware equal to that of brick or concrete.

8.2.1.3 Tin-clad doors used on hollow concrete masonry units shall be reinforced in accordance with 4.8.1.2.

8.2.1.4 Attachment of the door assembly to the wall shall be by means of through-wall bolts.

8.2.1.5 Expansion anchors shall be permitted to be used as specified in 4.8.6.

8.2.2 Sills. Sills shall be installed in accordance with 4.8.2.

8.2.3 Reserved.

8.2.4 Vents.

8.2.4.1 Tin-Clad Doors.

8.2.4.1.1 Each tin-clad door formed of 14 in. × 20 in. (360 mm × 510 mm) sheets shall be provided with 3 in. (76.2 mm) diameter vent holes that shall be permitted to be field or factory cut and shall be located as shown in ANSI/UL 10A, *Standard for Tin-Clad Fire Doors*.

8.2.4.1.2 Each section of spliced single doors and each leaf of center-parting doors shall be vented as indicated in ANSI/UL 10A, *Standard for Tin-Clad Fire Doors*.

8.2.4.1.3 Other types of doors containing combustible core material shall be vented as provided by the manufacturer's procedure under label service.

8.2.4.2 The vent holes shall be cut through the sheets on the face of the door opposite the rear binder pockets, using care to avoid injury to the wood core when cutting the holes in the sheets.

8.2.4.3 The metal covering around the opening shall be secured with small nails spaced about 1 in. (25.4 mm) apart, and the exposed wood shall be painted thoroughly.

8.3 Openings. (Reserved)

8.4 Assembly Components.

8.4.1 Closing Devices.

8.4.1.1 Doors shall be equipped with self-closing or automatic-closing devices to ensure that they shall close or be closed at the time of a fire.

8.4.1.1.1 Closing devices shall be a system of weights or a listed closing device.

8.4.1.1.2* Automatic-closing doors shall not have a delay of more than 10 seconds in the initiation of closing or reclosing.

8.4.1.2 Closing Speed.

8.4.1.2.1 The average closing speed shall be not less than 6 in./sec (152 mm/sec), not including any initial delay time.

8.4.1.2.2 In buildings where access by the general public is not restricted, the average closing speed for doors used shall be not more than 24 in./sec (610 mm/sec).

8.4.2* Releasing Devices.

8.4.2.1 General.

8.4.2.1.1 Power-operated doors not equipped with standby or emergency power shall be equipped with an integral or a separate listed releasing device that shall automatically disconnect the door from the control of the power operator at the time of a fire.

8.4.2.1.2 The releasing device shall be activated at the time of the fire by detectors or fusible links installed on both sides of the wall and interconnected so that the operation of the single

Copyright 2014 National Fire Protection Association (NFPA). Licensed, by agreement, for individual use and download on October 4, 2014 to LEADER and READER for designated user PATTARAPORN SRITRAKOOL. No other reproduction or transmission in any form permitted without written permission of NFPA. For inquires or to report unauthorized use, contact licensing@nfpa.org.

detector or fusible link shall allow the door to be disconnected and closed.

8.4.2.1.3 If closing is achieved by power operation, standby or emergency power shall be provided.

8.4.2.1.4 The time delay from failure of normal power operation to emergency power operation shall not exceed 10 seconds.

8.4.2.1.5 The standby or emergency power source shall have capacity to operate a minimum of 50 closing cycles of the door.

8.4.2.1.6 If door opening also is achieved by power operation, the standby or emergency power source shall have capacity to operate a minimum of 50 opening and closing cycles of the door.

8.4.2.2 Power operation shall not allow opening if temperatures on either side of the door reach 500°F (260°C).

8.4.3 Hardware.

8.4.3.1* Type. Only hardware listed for use with the door shall be permitted to be used.

8.4.3.2 Tracks. Tracks shall be inclined or level, depending on the manufacturer's specific label service procedure.

8.4.3.3 Bolts.

8.4.3.3.1 The wall bolts shall not be less than ⅝ in. (15.8 mm) in diameter unless so listed.

8.4.3.3.2 The bolt spacing shall be determined by the manufacturer's specific test and label service procedure.

8.4.3.4 Hangers.

8.4.3.4.1 No fewer than two hangers shall be provided for each door.

8.4.3.4.2 Tin-clad and sheet metal doors for openings in excess of 6 ft (1.83 m) shall have an additional hanger.

8.4.3.4.3 Two hangers shall be provided on each section of vertically spliced tin-clad doors.

8.4.3.5 Binders.

8.4.3.5.1* At least two binders shall be required on the vertical jambs, and at least one shall be required at the head unless otherwise listed.

8.4.3.5.2 Biparting sliding doors shall be provided with the sill binders or center guides if required by the individual manufacturer's label service procedure.

8.4.3.6* Stay Rollers. Stay rollers shall be installed in an approved manner.

8.4.3.7 Center Latch. Where doors are power operated, center-parting doors requiring a center latch shall be provided with a fusible link arrangement that shall hold the latch in an unlatched position during day-to-day operation while causing the latch to operate and secure the door in the event of a fire.

8.4.3.8 Handles.

8.4.3.8.1 Handles shall be provided for opening the doors from either side.

8.4.3.8.2 If flush pulls are used, they shall not be located back-to-back on tin-clad doors.

Chapter 9 Special-Purpose Horizontally Sliding Accordion or Folding Doors

9.1 Doors.

9.1.1 General. This chapter shall cover the installation of special-purpose horizontally sliding accordion or folding doors.

9.1.2 Components. A special-purpose horizontally sliding accordion or folding door assembly shall consist of doors, frames, latches, hinges, and closers of special construction or for special use.

9.1.3 Mounting of Doors.

9.1.3.1* Horizontally sliding accordion or folding doors shall be ceiling or wall mounted in track or tracks attached to a lintel or wall in accordance with the manufacturer's instructions and individual published listings.

9.1.3.2 Doors shall lap the opening if mounted completely on the surface of the wall or shall extend across the opening if ceiling mounted or surface mounted.

9.1.3.2.1 Doors shall completely close the opening.

9.1.3.2.2 Where doors provide protection of openings located in walls above floor level and no projecting sill is provided, the doors shall extend below the bottom of the opening in accordance with the listing.

9.1.3.3* Single doors shall be affixed to a jamb at one wall and shall close against a strike jamb provided at the other wall in accordance with the individual manufacturers' published listings.

9.1.3.4 Biparting doors shall each be affixed to a jamb at a wall and shall close together at the meeting stiles in accordance with the individual manufacturers' published listings.

9.2 Supporting Construction.

9.2.1 Walls.

9.2.1.1 Jambs attached to drywall construction shall be installed in accordance with the manufacturer's installation instructions.

9.2.1.2 Structural support shall be provided.

9.2.1.3 Attachment of jambs to masonry, concrete, or brick shall be by expansion bolt–type anchors or in accordance with the individual manufacturers' published listings.

9.2.2 Sills. Sill shall be installed in accordance with 4.8.2.

9.2.3 Lintels.

9.2.3.1* Lintels shall be applied to or be an integral part of the ceiling.

9.2.3.2 If lintels are not a part of the ceiling assembly, they shall not reduce the fire resistance rating of the door assembly.

9.2.3.3 Applied lintels (headers) shall be in accordance with the manufacturer's published listings.

9.2.3.4 Fasteners, if required, shall be in accordance with the manufacturer's installation instructions with spacing over the door stack area equal to half that of normal spacing.

9.3* Clearances Around Openings. Clearances at the lintel, jambs, and meeting stiles shall not exceed ⅛ in. (3.18 mm).

Copyright 2014 National Fire Protection Association (NFPA). Licensed, by agreement, for individual use and download on October 4, 2014 to LEADER and READER for designated user PATTARAPORN SRITRAKOOL. No other reproduction or transmission in any form permitted without written permission of NFPA. For inquires or to report unauthorized use, contact licensing@nfpa.org.

9.4 Assembly Components.

9.4.1 Closing Devices.

9.4.1.1 Closing devices shall be listed in accordance with UL 864, *Standard for Control Units and Accessories for Fire Alarm Systems*.

9.4.1.2 Doors shall be self-closing or automatic-closing and shall not have a delay in the initiation of closing or reclosing of more than 10 seconds.

9.4.1.3 The average closing speed shall be not less than 6 in./sec (152 mm/sec) or more than 24 in./sec (610 mm/sec).

9.4.2 Power Operators.

9.4.2.1 Only labeled power operators listed for use on fire doors shall be permitted.

9.4.2.2 Where used in a means of egress, only labeled power operators listed in a category intended to facilitate safe egress of persons in case of emergency shall be used.

9.4.2.3 The power operator shall be rated for continuous use with unlimited duty cycle.

9.4.2.4 If closing is achieved by power operation, standby or emergency power shall be provided.

9.4.2.4.1 The time delay from failure of normal power operation to emergency power operation shall not exceed 10 seconds.

9.4.2.4.2 The standby or emergency power source shall have capacity to operate a minimum of 50 closing cycles of the door.

9.4.2.4.3 If door opening also is achieved by power operation, the standby or emergency power source shall have capacity to operate a minimum of 50 opening and closing cycles of the door.

9.4.2.5 Once the door is closed, power operation shall not occur if temperatures on either side of the door reach 500°F (260°C).

9.4.3 Hardware. Only hardware listed for use with the door shall be used.

Chapter 10 Vertically Sliding Fire Doors

10.1 Doors.

10.1.1 General. This chapter shall cover the installation of vertically sliding fire doors.

10.1.2 Mounting of Doors.

10.1.2.1 Vertically sliding doors of the tin-clad, sheet metal (flush and corrugated) types shall be wall mounted.

10.1.2.2 The tin-clad and sheet metal doors shall lap the opening at least 4 in. (102 mm) at the sides and top.

10.2 Supporting Construction.

10.2.1 Walls. Walls shall be reinforced as necessary to provide anchorage of wall-mounted pulleys that carry the weight of the door and counterbalances.

10.2.1.1 Attachment of Door Assembly.

10.2.1.1.1 Attachment of the door assembly to the wall shall be by means of through-wall bolts.

10.2.1.1.2 As an alternative, expansion anchors shall be permitted to be used.

10.2.2 Sills. Sills shall be installed in accordance with 4.8.2.

10.2.3 Lintels. Lintels shall be of brick, concrete, or masonry arches, steel, or reinforced concrete, as indicated in 4.8.3.

10.2.4 Vents.

10.2.4.1 Each tin-clad door shall be provided with 3 in. (76.2 mm) diameter vent holes.

10.2.4.2 Doors up to 6 ft (1.83 m) wide shall be provided with three vents, and doors over 6 ft (1.83 m) wide shall be provided with four vents.

10.2.4.3 The vent holes shall be cut through the sheets on the face of the door to be provided with the guide shoes, using care to avoid interference with the hardware or injury to the wood core when cutting the holes in the sheet.

10.2.4.4 The metal covering around the opening shall be secured with small nails spaced about 1 in. (25.4 mm) apart, and the exposed wood shall be painted.

10.3 Clearances. The clearances between the door and the wall when the door is in the closed position shall not exceed ⅜ in. (9.53 mm).

10.4 Assembly Components.

10.4.1 Closing Devices.

10.4.1.1 Vertically sliding tin-clad, sheet metal, and sectional steel doors shall be equipped to close automatically at the time of fire.

10.4.1.2 Vertically sliding sectional doors shall close automatically upon operation of a fusible link or detector that releases the overhead sectional door, and the governor shall control the rate of descent.

10.4.1.3 Vertically sliding doors shall have an average closing speed of not less than 6 in./sec (152 mm/sec) or more than 24 in./sec (610 mm/sec).

10.4.2 Automatic Closers. Automatic-closing, vertically sliding doors shall be suspended by a system of weights and ropes, wire cables, or chains over pulleys.

10.4.2.1 All weights shall be enclosed in a substantial metal enclosure for the entire length of travel.

10.4.2.2 Pulleys over which the weight cable or chain passes shall be shielded to prevent the cable or chain from jumping off the pulley.

10.4.3 Fire Door Hardware.

10.4.3.1* Fire Door Hardware for Tin-Clad and Sheet Metal Doors. Only labeled fire door hardware shall be used.

10.4.3.1.1 Components. Fire door hardware shall consist of tracks, brackets, guides, bumpers, and counterbalancing mechanisms.

10.4.3.1.2* Track.

10.4.3.1.2.1 Two tracks, each with a length equal to twice the height plus 9 in. (229 mm), shall be provided.

Copyright 2014 National Fire Protection Association (NFPA). Licensed, by agreement, for individual use and download on October 4, 2014 to LEADER and READER for designated user PATTARAPORN SRITRAKOOL. No other reproduction or transmission in any form permitted without written permission of NFPA. For inquires or to report unauthorized use, contact licensing@nfpa.org.

10.4.3.1.2.2 The track shall be attached with track brackets at each bolt.

10.4.3.1.3 Guides.

10.4.3.1.3.1 Two track guides shall be provided for each track for openings 5 ft (1.52 m) or less in height.

10.4.3.1.3.2 An additional guide for each track shall be provided for each 2½ ft (0.76 m) or fraction thereof in excess of 5 ft (1.52 m) in height.

10.4.3.1.3.3 Each of the track guides shall be bolted through the door.

10.4.3.1.4 Cables.

10.4.3.1.4.1 Cables shall support the load.

10.4.3.1.4.2 Cable brackets shall be required and shall be bolted through the door.

10.4.3.1.4.3 Cable fasteners and thimbles shall be required.

10.4.3.1.4.4 Cable pulleys with frames and sheaves shall be bolted through the wall with ¾ in. (19.05 mm) bolts.

10.4.3.1.5 Chafing Strips.

10.4.3.1.5.1 Tin-clad and flush-type sheet metal doors shall be provided with two half-oval chafing strips for the back of doors not exceeding 8 ft (2.44 m) in width.

(1) The length shall be 2 in. (50.8 mm) less than the height of the door.
(2) The strips shall be held by ¼ in. (6.35 mm) through-bolts with countersunk heads and with nuts bearing against washers.
(3) Where doors exceed the specified width, three strips shall be required.

10.4.3.1.5.2 Chafing strips shall not be required for corrugated doors.

10.4.3.1.6 Bumpers and Bumper Shoes.

10.4.3.1.6.1 One bumper shall be bolted to the top of each track with wall bolts.

10.4.3.1.6.2 Four bumper shoes shall be installed, one bumper at each corner of the door.

10.4.3.1.6.3 Each bumper shall be fastened to the faces and edges of the door by wood screws.

10.4.3.1.7* Rear Binders. Doors shall be provided with one rear binder located at the center of the lintel and attached with ¾ in. (19 mm) bolts.

10.4.3.1.8 Handles.

10.4.3.1.8.1 Flush pull handles on the wall side of the door shall be countersunk flush with the surface of the door.

10.4.3.1.8.2 Bow-shaped handles shall be bolted to the flush pull by through-bolts or otherwise securely attached.

10.4.3.2 Fire Door Hardware for Steel Sectional Doors.

10.4.3.2.1 Label. The fire door label on a sectional door shall include the hinged steel panels, wall guides, interlock at the top edge, vertical and horizontal tracks, roller wheels, counterbalance, automatic-closing mechanism, and governors.

10.4.3.2.2 Track. The horizontal track section shall extend from the wall a distance of the wall opening height plus 3 ft (0.91 m) and shall be connected by a fusible track link to the vertical track section such that the track breaks away from the vertical track section if subjected to damage from falling materials at the time of fire.

10.4.3.2.3 Guides.

10.4.3.2.3.1 The wall guides shall be plumb and bolted to or through the wall.

10.4.3.2.3.2 The guides shall extend above the wall opening a distance of 2½ in. (63.5 mm).

10.4.3.2.4 Interlocking. An angle-type interlock shall be bolted to the lintel and shall engage a matching pocket on the top edge of the door when in the closed position.

10.4.3.2.5 Counterbalancing Mechanism.

10.4.3.2.5.1 The sectional door shall be counterbalanced by an overhead horizontal helical spring on a shaft.

10.4.3.2.5.2 The shaft shall be attached to a reel with a steel cable attached to both sides of the door near the bottom edge.

Chapter 11 Rolling Steel Doors

11.1 Doors.

11.1.1 General. This chapter shall cover the installation of rolling steel fire doors.

11.1.2 Mounting of Doors.

11.1.2.1* The mounting for rolling steel doors shall be either face-of-wall mounted or between-the-jamb mounted.

11.1.2.2 The opening shall be protected by either a single door or double door installation as determined by the AHJ.

11.1.2.3 Rolling steel fire doors shall be permitted to be mounted to steel members set in or against the wall in accordance with their listing.

11.2 Supporting Construction.

11.2.1 Walls. Walls shall be constructed in accordance with 4.8.1 and support the size and weight of the door assembly and its intended use.

11.2.2 Sills. Sills shall be constructed in accordance with 4.8.2.

11.2.3 Lintels. Lintels shall be constructed in accordance with 4.8.3.

11.3 Openings.

11.3.1 Fire door frames shall not be required for rolling steel fire door installations.

11.3.2 Where metal jambs are provided, only minimum 3/16 in. (4.76 mm) nominal structural steel or formed steel shall be used.

11.3.3 Jambs shall be in accordance with the manufacturer's listing.

11.3.4 Items that are not a part of the fire door assembly shall not be field attached to any component of a rolling steel fire door.

11.3.5 Access to, and clearances between, surrounding construction and a rolling steel fire door shall allow for required testing and maintenance.

Copyright 2014 National Fire Protection Association (NFPA). Licensed, by agreement, for individual use and download on October 4, 2014 to LEADER and READER for designated user PATTARAPORN SRITRAKOOL. No other reproduction or transmission in any form permitted without written permission of NFPA. For inquires or to report unauthorized use, contact licensing@nfpa.org.

11.4 Assembly Components.

11.4.1 Closing Devices.

11.4.1.1 An automatic-closing device shall be installed on every rolling steel door.

11.4.1.2 Rolling steel doors shall close automatically upon activation or release of a fusible link or detector.

11.4.1.3 After automatic closing, the bottom bar shall come to rest in the closed position.

11.4.1.4 A governor, where provided, shall control the rate of descent of the door curtain during automatic closing.

11.4.1.5 Rolling steel fire doors shall have an average closing speed of not less than 6 in./sec (152 mm/sec) or more than 24 in./sec (610 mm/sec).

11.4.2* Power-Operated Rolling Steel Fire Doors.

11.4.2.1 Power-operated fire doors shall be permitted to be furnished with a sensor that causes the door closer to stop or reverse upon contact with an obstruction under normal conditions.

11.4.2.2 Power-operated rolling steel fire doors shall be equipped with an automatic-closing device that, upon activation, will cause the door to close.

11.4.2.2.1 After automatic closing is activated, the door shall remain in the closed position until the automatic-closing device has been reset.

11.4.2.2.2 When automatic closing is accomplished by means of a power operator, the door shall remain in the closed position or shall be permitted to automatically open and then reclose if a sensing edge has been provided and an obstruction is encountered during automatic closure.

11.4.2.2.2.1 The door shall remain in the closed position until the automatic closing device has been reset.

11.4.2.2.3 When an automatic closing device is designed to open and reclose when encountering an obstruction, the unit shall be designed such that it can reopen a maximum of three times.

11.4.2.2.3.1 After encountering an obstruction for the third time, the bottom bar shall come to rest on the obstruction.

11.4.3 Assembly of Rolling Doors.

11.4.3.1 Guides.

11.4.3.1.1 Guides for rolling steel fire doors shall be mounted either on the face of the wall or between the jambs, or a combination thereof.

11.4.3.1.2 The guides shall be mounted plumb and with the required clearances to allow for vertical expansion when exposed to fire.

11.4.3.1.3* The individual door manufacturer's written installation instructions and listing shall be consulted for the location and amount of clearance required.

11.4.3.1.4 The guides shall be permitted to be either exposed or concealed in a pocket or wall reveal.

11.4.3.1.5 Attachment of the guides to masonry wall construction shall be by means of through-wall bolts.

11.4.3.1.6 Attachment of guides to a wall of non-masonry construction shall be in accordance with the manufacturer's written installation instructions and listing.

11.4.3.1.7 As an alternative to 11.4.3.1.5, expansion anchors shall be permitted to be used in accordance with 4.8.6.

11.4.3.1.8 Where metal jambs that have been designed to support the size and weight of the door assembly for its intended function are used, guides shall be bolted to the jambs.

11.4.3.1.9 As an alternative to 11.4.3.1.8, guides shall be permitted to be welded to the jambs in accordance with the manufacturer's written instructions and listing.

11.4.3.2 Hoods.

11.4.3.2.1 A hood shall be provided.

11.4.3.2.2 Where a flame baffle is provided, a fusible link connection to the flame baffle shall be permitted to be independent of the detectors or fusible link connections that activate the door's automatic-closing device.

11.5 Weather Protection. Where rolling steel fire doors are installed on the exterior of a building, the doors shall be protected against the weather to ensure operation.

Chapter 12 Fire Shutters

12.1 Types. Fire shutters shall be of the following three general types:

(1) Swinging door
(2) Horizontally or vertically sliding door
(3) Rolling steel door

12.2 Requirements. The requirements of fire shutters shall be in accordance with the requirements for the general types shown in Section 12.1.

12.3* Weather Protection. Where rolling steel horizontally or vertically sliding fire shutters are installed on the exterior of a building, they shall be protected against the weather to ensure operation.

Chapter 13 Service Counter Fire Doors

13.1 Doors.

13.1.1 General. This chapter shall cover the installation of service counter fire doors.

13.1.2 Types. Service counter fire doors shall be of the following three general types:

(1) Swinging door panels of a single or multiple section vertical type, integrally mounted in a four-sided frame to form a labeled door and frame assembly
(2) Horizontally or vertically sliding door
(3) Rolling steel fire door

13.2 Supporting Construction.

13.2.1 Walls. Walls shall be constructed in accordance with 4.8.1 and support the size and weight of the door assembly and its intended use.

13.2.2 Sills. Sills shall be constructed in accordance with 4.8.2.

Copyright 2014 National Fire Protection Association (NFPA). Licensed, by agreement, for individual use and download on October 4, 2014 to LEADER and READER for designated user PATTARAPORN SRITRAKOOL. No other reproduction or transmission in any form permitted without written permission of NFPA. For inquires or to report unauthorized use, contact licensing@nfpa.org.

13.2.3 Lintels.

13.2.3.1 Lintels shall be constructed in accordance with 4.8.3.

13.2.3.2 Heads of integral door frame assemblies shall not support a wall above.

13.2.3.3 Separate lintels of a size based on the type of wall construction and loads to be supported shall be provided.

13.3 Counters. Where counters are supplied separately from the balance of the door assemblies, they shall be labeled and installed in accordance with their listing.

13.4 Automatic Closing.

13.4.1 All service counter fire doors shall be equipped to close automatically in the event of fire.

13.4.2 A service counter fire door of the rolling type shall be automatic closing so that, upon activation or release of a fusible link or detector, the door shall close.

13.4.3 A service counter fire door of the swinging or sliding type shall be made automatic closing by a system of weights suspended by ropes, cables, or chains over pulleys that, when activated by release of an automatic fire detector, shall cause the door to close.

13.4.4 A governor, where employed on a service counter fire door, shall work in coordination with the closing device and shall control the closing speed of the door.

13.4.5 A service counter fire door of the rolling type shall have an average closing speed of not less than 6 in./sec (152 mm/sec) or more than 24 in./sec (610 mm/sec).

Chapter 14 Hoistway Doors for Elevators and Dumbwaiters

14.1 Doors.

14.1.1* General. This chapter shall cover only fire door assemblies in hoistway entrances directly connected with closed elevator or dumbwaiter operation and used in the vertical hoistway enclosure for the purpose of preventing the passage of fire through such entrances.

14.1.2 Components. Fire door entrances shall consist of fire door panels, frames, headers, track, hangers (some doors are provided with integral hangers), pendant bolts, sills, sill support plates, sill brackets, retaining angles, and a closer assembly.

14.1.3 Mounting of Doors. Fire door entrances used in elevator hoistways also shall conform to the requirements of ASME A17.1, *Safety Code for Elevators and Escalators*, including *Addenda ASME A17.1a-2005* and *Supplement ASME A17.1S-2005*, or CSA B44, *Safety Code for Elevators*.

14.1.3.1 Fire door assemblies shall have fire protection ratings of ¾ hour, 1 hour, 1½ hours, or 2 hours (2 hours in Canada only).

14.1.3.2 Labeled hoistway door assemblies shall be installed in walls of approved fire resistance–rated construction.

14.1.3.3 Hoistway door frame assemblies shall be installed in accordance with the listing and labeling procedures, including the manufacturer's installation instructions.

14.1.3.4 Where horizontal sliding entrances without frames are used in masonry or concrete, the panels shall overlap the sides of the opening at least ⅝ in. (16 mm) beyond the thickness of any facing used to finish the opening.

14.1.3.5 Where vertically sliding entrances without frames are used in masonry or concrete, the panels shall overlap the top and bottom of the opening by at least 2 in. (51 mm) beyond the thickness of any facing used to finish the opening.

14.1.3.6 Where the entrance is too large for the regularly available test facilities, the certifying organization shall be permitted to issue oversize certificates or oversize labels.

14.2 Types of Doors.

14.2.1 Labeled Swing Hoistway Doors for Elevators and Dumbwaiters — Fire-Rated Entrance.

14.2.1.1 Each entrance shall be labeled.

14.2.1.2 Each label shall bear the name of the manufacturer.

14.2.1.3* Elevator Entrances.

14.2.1.3.1 One label shall be provided for the door panels and shall be located so that it is visible after installation.

14.2.1.3.2 One label shall be provided for the frame and shall be located so that it is visible after installation.

14.2.1.3.3 Where all entrance hardware components have not been tested in a complete assembly, individually labeled hardware components that are designed to be compatible with the entrance assembly shall be provided.

14.2.1.3.3.1 One label shall be permitted to be provided for the entrance hardware where the entrance hardware components are equivalent to those tested in a complete assembly.

14.2.1.3.3.2 One label shall be permitted to be provided for the complete entrance assembly where the components are the same as those tested in a complete assembly.

14.2.1.3.4 A master label indicating the name of the manufacturer shall be provided for the door panel and located so that it is visible for review by the AHJ after installation.

14.2.1.3.5 The components of entrance assemblies, such as frames, sills, and sill supports, shall bear a component label.

14.2.1.3.6 Only labeled locks, latches, and closers shall be used.

14.2.1.3.7 Labeled entrance hardware components, such as door frames, locks, latches, and closer assemblies, that have not been tested in a complete assembly with the fire doors shall be permitted to be provided if they are designed to be compatible with the entrance hardware components tested in a complete assembly.

14.2.1.4* Dumbwaiters.

14.2.1.4.1 A master label indicating the name of the manufacturer shall be provided for the door panel and located so that it is visible for review by the AHJ after installation.

14.2.1.4.2 The label shall specify the design and construction of the door, frame, and hardware.

14.2.2 Labeled Horizontally Sliding Hoistway Doors for Elevators and Dumbwaiters — Fire-Rated Entrance.

14.2.2.1 Each entrance shall be labeled.

14.2.2.2 Each label shall bear the name of the manufacturer.

Copyright 2014 National Fire Protection Association (NFPA). Licensed, by agreement, for individual use and download on October 4, 2014 to LEADER and READER for designated user PATTARAPORN SRITRAKOOL. No other reproduction or transmission in any form permitted without written permission of NFPA. For inquires or to report unauthorized use, contact licensing@nfpa.org.

14.2.2.3* Elevator Entrances.

14.2.2.3.1 One label shall be provided for the door panels and shall be located so that it is visible after installation.

14.2.2.3.2 One label shall be provided for the frame and shall be located so that it is visible after installation.

14.2.2.3.2.1 Labels shall not be required where frames are installed in masonry or concrete and where the panel overlaps the opening by ⅝ in. (9.5 mm) beyond the thickness of any facing used to finish the opening.

14.2.2.3.3 Where all entrance hardware components have not been tested in a complete assembly, individually labeled hardware components that are designed to be compatible with the entrance assembly shall be provided.

14.2.2.3.3.1 One label shall be permitted to be provided for the entrance hardware where the entrance hardware components are equivalent to those tested in a complete assembly.

14.2.2.3.3.2 One label shall be permitted to be provided for the complete entrance assembly where the components are the same as those tested in a complete assembly.

14.2.2.3.4 A master label indicating the name of the manufacturer shall be provided for the door panel and located so that it is visible for review by the AHJ after installation.

14.2.2.3.5 The components of entrance assemblies, such as frames, sills, sill support plates, headers, tracks, hangers, pendant bolts, retaining angles, closer assemblies, and interlock mechanisms, shall bear a component label.

14.2.2.3.6 Labeled entrance hardware components, such as tracks, closer assemblies, interlock mechanisms, and sills, that have not been tested in a complete assembly with the fire doors shall be permitted to be provided if they are designed to be compatible with the entrance hardware components tested in a complete assembly.

14.2.2.4* Dumbwaiters.

14.2.2.4.1 A master label indicating the name of the manufacturer shall be provided for the door panel and located so that it is visible for review by the AHJ after installation.

14.2.2.4.2 The label shall specify the design and construction of the door, frame, and hardware.

14.2.3* Labeled Vertically Sliding Hoistway Doors for Elevators and Dumbwaiters — Fire-Rated Entrance.

14.2.3.1 Each entrance shall be labeled or listed.

14.2.3.2 Each label shall bear the name of the manufacturer.

14.2.3.3 One label shall be provided for the door panels and shall be located so that it is visible after installation.

14.2.3.4 Where a frame is provided or required, one label shall be provided for the frame and shall be located so that it is visible for review by the AHJ after installation.

14.2.3.4.1 Labels shall not be required where frames are made from structural steel channel and are installed in masonry or concrete and where the panel overlaps the thickness of any facing used to finish the opening by 2 in. (51 mm).

14.2.3.5 Where all entrance hardware components have not been tested in a complete assembly, individually labeled hardware components that are designed to be compatible with the entrance assembly shall be provided as follows:

(1) One label shall be permitted to be provided for the entrance hardware where the entrance hardware components are equivalent to those tested in a complete assembly.
(2) One label shall be permitted to be provided for the complete entrance assembly where the components are the same as those tested in a complete assembly.

14.2.3.6 A master label indicating the name of the manufacturer shall be provided for the door panel where installed in drywall and shall be located so that it is visible for review by the AHJ after installation.

14.2.3.7 The components of entrance assemblies, such as frames, guides, shoes, and locking assemblies, shall bear a component label.

14.2.3.8 Labeled entrance hardware components, such as closer and latching assemblies, that have not been tested in a complete assembly with the fire doors shall be permitted to be provided if they are designed to be compatible with the entrance hardware components tested in a complete assembly.

14.3 Hoistway Door Vision Panels.

14.3.1 Where required or used, vision panels shall conform to ASME A17.1, *Safety Code for Elevators and Escalators,* or CSA B44, *Safety Code for Elevators,* and to the requirements of 14.3.1 through 14.4.4.

14.3.2 Muntins, trim, and vision panel protection shall be of noncombustible material.

14.4 Door Operation.

14.4.1 Horizontally sliding doors shall be closed when the car is at a landing unless otherwise permitted by 14.4.2 or 14.4.3.

14.4.2 Compliance with 14.4.1 shall not be required where the elevator is operated by a designated operator in the car, when loading or unloading, and when the elevator is actively dispatched by an automatic system that controls the doors.

14.4.3 Compliance with 14.4.1 shall not be required where elevators are under fire fighter emergency recall operation conforming to the requirements of ASME A17.1, *Safety Code for Elevators and Escalators,* or CSA B44, *Safety Code for Elevators.*

14.4.4 Where required by the AHJ, doors serving elevators required to conform with 14.4.1 shall be automatically closed after a predetermined time interval.

Chapter 15 Chute Doors

15.1 Doors.

15.1.1 Operation. Chute doors shall be of the swinging type that are hinged on the side or bottom for intake and on the side or top for discharge, or as otherwise allowed by their listing.

15.1.2* Fire Protection Rating. Chute doors shall have a fire protection rating of 1 hour or 1½ hours.

15.1.3 Door assemblies shall be installed in accordance with their listing.

15.1.4 No part of the assembly shall project into the chute.

15.1.5 Doors shall be self-closing or arranged for automatic-closing operation as described in 7.4.1 for swinging doors.

Copyright 2014 National Fire Protection Association (NFPA). Licensed, by agreement, for individual use and download on October 4, 2014 to LEADER and READER for designated user PATTARAPORN SRITRAKOOL. No other reproduction or transmission in any form permitted without written permission of NFPA. For inquires or to report unauthorized use, contact licensing@nfpa.org.

Chapter 16 Access Doors

16.1 Doors.

16.1.1 General. This chapter shall cover the installation of both horizontal and vertical access doors in fire-rated walls, floors, and floor–ceiling or roof–ceiling assemblies.

16.1.2 Components.

16.1.2.1 An access door shall be an integral unit including the door, frame, hinges, latch, and closing device (where required) bearing a label that reads "Frame and Fire Door Assembly."

16.1.2.2 A vertical access door shall be permitted to have hinges that are not part of the labeled assembly, provided the hinges conform to Table 6.4.3.1.

16.1.2.3 Access doors shall be self-closing.

16.1.2.4 Access doors shall be self-latching.

16.1.2.4.1 A horizontal access door that does not open downward and that remains in place when an upward force of 1 lb/ft^2 (48 N/m^2) is applied over the entire exposed surface of the door shall not be required to be self-latching.

16.1.2.5 Self-closing access doors that are intended to be used to allow a person to completely enter the concealed space behind the door shall be operable from the inside without the use of a key or tool.

16.1.2.6 Access doors shall be installed in accordance with their listing.

16.2 Types of Doors.

16.2.1 Horizontal Access Doors.

16.2.1.1 Door assemblies used in fire resistance–rated floor–ceiling or roof–ceiling assemblies shall be tested in the horizontal position in accordance with the procedures described in ASTM E119, *Standard Test Methods for Fire Tests of Building Construction and Materials*, and shall be labeled as horizontal access doors.

16.2.1.2 A horizontal access door shall bear a label that includes the additional wording "For Horizontal Installation."

16.2.1.3 A horizontal access door shall be used in a fire resistance–rated floor–ceiling or roof–ceiling assembly only where it has been tested and listed for use as a component of the assembly.

16.2.1.4 Horizontal access doors shall not be required to be subject to the hose stream test.

16.2.2 Vertical Access Doors.

16.2.2.1 Vertical access doors shall have a fire protection rating of ¾ hour, 1 hour, or 1½ hours. *(See Annex E.)*

16.2.2.2 Vertical access doors shall be used only in walls.

16.2.2.3 Where the AHJ determines that a vertical access door is located in proximity to combustibles so that in a fire condition the door is likely to transmit heat to ignite the combustibles, the temperature rise on the unexposed face of the door shall not exceed 250°F (139°C) at the end of a 30-minute exposure to the standard fire test as described in NFPA 252, *Standard Methods of Fire Tests of Door Assemblies.*

16.2.2.3.1 Such an access door as described in 16.2.2.3 shall bear a label indicating a maximum temperature rise of 250°F (139°C).

16.2.2.4 Closing by means of gravity using top-hinging vertical access doors shall be permitted to meet the requirements for self-closing doors.

16.2.2.5 A vertical access door shall bear a label that includes the additional wording "For Vertical Installation."

16.2.3 Floor Fire Door Assemblies. Floor fire door assemblies shall be tested in accordance with the procedures described in NFPA 288, *Standard Methods of Fire Tests of Horizontal Fire Door Assemblies Installed in Horizontal Fire Resistance–Rated Assemblies.*

Chapter 17 Fire Windows

17.1 Windows.

17.1.1 General. This chapter shall cover the installation of fire windows.

17.1.2 Testing.

17.1.2.1 Fire windows shall be tested in accordance with NFPA 257, *Standard on Fire Test for Window and Glass Block Assemblies*, and ANSI/UL 9, *Standard for Fire Tests of Window Assemblies*, for the required fire protection rating of the window opening.

17.1.2.2 Fire windows shall be labeled.

17.1.3* Fire Window Frames. Fire window frame assemblies shall be permanently labeled for such use.

17.2 Glazing Material.

17.2.1* Labeled. Fire protection glazing or fire resistance glazing in fire windows shall be labeled. *(See also 17.2.3.)*

17.2.2* Size.

17.2.2.1 Glazing material installed in fire windows shall be limited to the maximum size openings indicated in their individual listings.

17.2.2.2 Individual glazing material exposed area shall not exceed 1296 in.^{2} (0.84 m^2), with no dimension exceeding 54 in. (1.37 m) unless otherwise tested.

17.2.3 Identification.

17.2.3.1 Each individual glazing unit shall be identified with a label or other identification.

17.2.3.2 The label or other identification shall be permanently applied and shall be visible after installation.

17.2.4 Safety. Fire protection glazing and fire resistance glazing installed in fire windows that are subject to human impact shall meet applicable impact safety standards.

17.3 Types of Windows.

17.3.1 Fire Window Applications.

17.3.1.1 Partitions. Fire windows shall be used to protect openings in interior and exterior partitions required by the AHJ to be protected.

17.3.1.2 Glass block assemblies shall be installed in accordance with Chapter 18.

Copyright 2014 National Fire Protection Association (NFPA). Licensed, by agreement, for individual use and download on October 4, 2014 to LEADER and READER for designated user PATTARAPORN SRITRAKOOL. No other reproduction or transmission in any form permitted without written permission of NFPA. For inquires or to report unauthorized use, contact licensing@nfpa.org.

17.3.1.3 In exterior walls, openings shall be limited to the maximum size listed in accordance with 17.3.2.2, 17.3.3.5, and 17.3.4.

17.3.2 Hollow Metal–Framed Windows.

17.3.2.1 Hollow metal–framed windows shall consist of formed steel sheet, reinforced as required.

17.3.2.2 Maximum size openings for hollow metal windows shall be as follows:

(1) Single window, other than casement: 5 ft × 5 ft (1.52 m × 1.52 m)
(2) Multiple windows, other than casement: 7 ft × 10 ft (2.13 m × 3.05 m)
(3) Single casement window: 3½ ft × 10 ft (1.07 m × 3.05 m)
(4) Multiple casement window: 7 ft × 10 ft (2.13 m × 3.05 m)

17.3.3 Hot-Rolled or Extruded Steel Section Windows.

17.3.3.1 The heavy intermediate window frame and ventilator sections shall be a minimum depth of 1$^{5}/_{16}$ in. (33 mm) with integrally rolled weathering contacts.

17.3.3.2 The standard intermediate window frame and ventilator sections shall be a minimum depth of 1¼ in. (32 mm) with integrally rolled weathering contacts.

17.3.3.3 The residential-type window frame and ventilator sections shall be a minimum depth of 1 in. (25.4 mm) with integrally rolled weathering contacts.

17.3.3.4 The industrial-type window frame and ventilator sections shall be a minimum depth of 1¼ in. (32 mm) with applied weathering contacts.

17.3.3.5 Maximum Openings for Hot-Rolled or Extruded Steel Section Windows.

17.3.3.5.1 Heavy Intermediate and Industrial Types.

17.3.3.5.1.1 The heavy intermediate and industrial types shall be used for openings not exceeding 84 ft^2 (7.8 m^2), with neither dimension exceeding 12 ft (3.66 m).

17.3.3.5.1.2 Where multiple units are installed, the distance between unprotected vertical steel mullions shall not exceed 7 ft (2.13 m).

17.3.3.5.2 Standard Intermediate Types.

17.3.3.5.2.1 The standard intermediate types shall be used for openings not exceeding 60 ft^2 (5.57 m^2), with neither dimension exceeding 10 ft (3.05 m).

17.3.3.5.2.2 Where multiple units are installed, the distance between unprotected vertical steel mullions shall not exceed 6½ ft (1.98 m).

17.3.3.5.3 Residential Types.

17.3.3.5.3.1 Residential-type windows shall be used for openings not exceeding 6½ ft (1.98 m) for either dimension.

17.3.3.5.3.2 Where multiple units are installed, the distance between unprotected vertical steel mullions shall not exceed 3½ ft (1.07 m).

17.3.4 Hollow Metal Plate Steel (Combination) Windows. Maximum size openings for hollow metal plate steel windows shall be as follows:

(1) Single window: 5 ft × 5 ft (1.52 m × 1.52 m)
(2) Multiple windows: 7 ft × 10 ft (2.13 m × 3.05 m)

17.4 Installation.

17.4.1 Frames. Frames shall be fastened securely to the wall and shall be capable of resisting all wind stresses and any other stresses for which the window was designed.

17.4.2 Fire Lock Angles.

17.4.2.1 Fire lock angles shall be designed to hold the ventilator in the frame as the assembly expands under exposure to fire.

17.4.2.2 Where the window is provided with fire lock angles, the fire lock angles shall be adjusted so that they pass one another with a minimum of clearance.

17.4.3 Glazing Material. Glazing materials shall be installed in accordance with their individual listing.

17.5 Closing Devices.

17.5.1 All fire windows shall be of a fixed type or shall be automatic closing.

17.5.2 The automatic-closing device shall be permitted to be an integral part of the assembly or a separate system, such as weights suspended by ropes, wire cables, or chains over pulleys, arranged so that operation of the automatic fire detector shall cause the ventilator to close.

Chapter 18 Glass Block Assemblies

18.1 General. This chapter shall cover the installation of glass block assemblies.

18.1.1* Testing. Glass block assemblies shall be tested in accordance with NFPA 257, *Standard on Fire Test for Window and Glass Block Assemblies*, or ANSI/UL 9, *Standard for Fire Tests of Window Assemblies*, for the required fire protection rating of the opening.

18.1.2 Labeled. Only labeled glass block assemblies shall be used.

18.1.3 Size. Glass block assemblies shall be permitted for the protection of openings not exceeding 120 ft^2 (11.15 m^2), with neither the width nor the height exceeding 12 ft (3.66 m).

18.2 Installation.

18.2.1 Glass block assemblies shall be installed in accordance with their individual listings.

18.2.2 Unless prohibited by the applicable code, fire protection glass block shall be permitted to be installed in interior wall assemblies having a fire resistance rating of 1 hour or less and in exterior wall assemblies having a fire resistance rating of 2 hours or less.

Chapter 19 Installation, Testing, and Maintenance of Fire Dampers

19.1 General.

19.1.1* This chapter covers the requirements of the installation, testing, and maintenance of fire dampers, radiation dampers, and combination fire and smoke dampers.

19.1.2 Damper ratings shall be established in accordance with NFPA 90A, *Standard for the Installation of Air-Conditioning and Ventilating Systems*.

Copyright 2014 National Fire Protection Association (NFPA). Licensed, by agreement, for individual use and download on October 4, 2014 to LEADER and READER for designated user PATTARAPORN SRITRAKOOL. No other reproduction or transmission in any form permitted without written permission of NFPA. For inquires or to report unauthorized use, contact licensing@nfpa.org.

19.1.3 Combination fire/smoke dampers shall also meet the requirements contained in NFPA 105, *Standard for Smoke Door Assemblies and Other Opening Protectives*.

19.1.4 Definitions.

19.1.4.1 Breakaway Connection. A joint connecting a fire damper sleeve and attached ductwork that will allow collapse of the ductwork during a fire without disturbing the integrity of the fire damper. *(See 3.3.16.)*

19.1.4.2 Ceiling Radiation Damper. A listed device installed in a ceiling membrane of a fire resistance–rated floor-ceiling or roof-ceiling assembly to automatically limit the radiative heat transfer through an air inlet/outlet opening. *(See 3.3.19.)* [**5000**, 2012]

19.1.4.3 Combination Fire/Smoke Damper. A device that meets both the fire damper and smoke damper requirements. *(See 3.3.27.)*

19.1.4.4 Dynamic System. An HVAC system designed to maintain the movement of air within the system at the indication of a fire. *(See 3.3.43.)*

19.1.4.5 Fire Damper. A device installed in an air distribution system, designed to close automatically upon detection of heat, to interrupt migratory airflow and to restrict the passage of flame. Fire dampers are classified for use in either static systems or for dynamic systems, where the dampers are rated for closure under airflow. *(See 3.3.48.)*

19.1.4.6 Fire-Rated Damper Mullion. A mullion used to separate multiple listed dampers in large openings. *(See 3.3.58.)*

19.1.4.7 Retaining Angle. The metal angle used to retain the fire damper in the opening. *(See 3.3.96.)*

19.1.4.8 Smoke Damper. A device within an operating (dynamic) air distribution system to control the movement of smoke. *(See 3.3.115.)*

19.1.4.9 Static System. An HVAC system designed to stop the movement of air within the system at the indication of a fire. *(See 3.3.119.)*

19.1.4.10 Volume Control Damper. A fire damper, smoke damper, or combination fire/smoke damper that is also used to control the volume of air in an HVAC system. *(See 3.3.138.)*

19.2 Installation.

19.2.1* Dampers. The damper assembly shall be secured in the opening in such a manner as to prevent distortion and impairment of the damper operation by allowing the damper in the wall opening to expand under elevated temperature.

19.2.1.1 Damper Sleeve.

19.2.1.1.1 A damper installed in a fire resistance–rated assembly shall be located (in its sleeve) within the plane of the fire resistance–rated assembly, unless listed otherwise and installed in accordance with the manufacturer's installation instructions and the listing.

19.2.1.1.2 The sleeve containing the fire damper and combination fire/smoke damper shall be installed perpendicular to the opening in which it is to be installed.

19.2.1.2 Opening Preparation.

19.2.1.2.1 Prior to any installation, the opening in the wall, partition, or ceiling assembly shall be prepared in accordance with manufacturers' installation instructions.

19.2.1.2.2 The opening in a stud wall or partition shall be framed with headers, sills, and bucks, and the opening shall be lined with fire-resistant material to achieve the desired fire resistance rating of the assembly unless noted otherwise in the manufacturer's installation instructions.

19.2.1.3 Sleeve Construction. Depending on the duct type, duct size, and method of sleeve connection, the sleeve shall be constructed with material thickness as shown in Table 19.2.1.3.

Table 19.2.1.3 Minimum Sleeve Thickness

Type of Connection	Air Duct Diameter or Maximum Width		Minimum Sleeve Thickness*	
	in.	mm	gauge	in.
Breakaway	12 or less	305	26	0.018
	13–30	330–762	24	0.024
	31–54	787–1372	22	0.030
	55–84	1397–2134	20	0.036
	85 or more	2159 or more	18	0.047
Rigid	24 max.	610 round	16	0.060
	24 max. height, 36 max. width	610 max. height, 914 max. width	16	0.060
	Over 24 high and 36 wide	Over 610 high and 914 wide	14	0.075

*In accordance with ANSI/UL 555, *Standard for Fire Dampers*.

19.2.1.3.1 Connections between the sleeve and the duct shall be either the rigid type or the breakaway type.

19.2.1.3.2 When breakaway connections are provided between the damper sleeve and the ductwork, the gauge of the sleeve shall be in accordance with Table 19.2.1.3.

19.2.1.3.2.1 The type of breakaway connection shall be in accordance with the damper manufacturer's installation instructions.

19.2.1.3.3 Where the thickness of the fire damper and combination fire/smoke damper frame is thicker than the fire resistance–rated assembly in which it is to be installed, the fire damper and combination fire/smoke damper shall be mounted in a sleeve, unless otherwise noted in the manufacturer's installation instructions.

19.2.1.4* Sleeve Clearance Within Opening. The sleeve clearance requirements given in the manufacturer's installation instructions shall be adhered to.

19.2.1.4.1 This void shall not be filled with any material unless shown on the manufacturer's installation instructions.

19.2.1.4.2 The maximum opening size shall be based upon the required thermal expansion clearance plus 1 in. (25.4 mm).

19.2.1.5 Mounting Method. The damper shall be installed in the orientation and airflow direction as indicated on the damper.

19.2.1.6 Retaining Angles.

19.2.1.6.1 A damper, in its sleeve, shall be retained in the wall opening using steel retaining angle(s).

Copyright 2014 National Fire Protection Association (NFPA). Licensed, by agreement, for individual use and download on October 4, 2014 to LEADER and READER for designated user PATTARAPORN SRITRAKOOL. No other reproduction or transmission in any form permitted without written permission of NFPA. For inquires or to report unauthorized use, contact licensing@nfpa.org.

19.2.1.6.2 The gauge of the retaining angle shall be in accordance with the individual fire damper's manufacturer's installation instructions or in accordance with the Sheet Metal and Air Conditioning Contractors' National Association (SMACNA) publication, *Fire, Smoke and Radiation Damper Installation Guide for HVAC Systems*.

19.2.1.7 Duct-Sleeve Connections. The rigid or breakaway duct-sleeve connection shall be installed per the manufacturer's installation instructions or in accordance with the SMACNA installation guideline.

19.2.2 Ceiling Radiation Dampers. The ceiling damper shall be installed in accordance with the manufacturer's installation instructions in fire resistance–rated floor–ceiling or roof–ceiling assemblies.

19.2.2.1 Ceiling radiation dampers and diffusers tested and listed as an assembly shall be installed in accordance with the manufacturer's installation instructions.

19.2.2.2 When required by the listing, a heat-resistive material shall be installed to cover any exposed surface on the top or sides of the diffuser that is not protected by the ceiling damper.

19.2.3 Access. Dampers equipped with fusible links, internal operators, or both shall be provided with an access door that is not less than 12 in. (305 mm) square or provided with a removable duct section.

19.2.3.1 Dampers that are installed behind registers, diffusers, or grilles shall be serviceable by removal of these covers.

19.2.3.2 The damper access panel shall be labeled with the words "Fire Damper" in letters not less than 1 in. (25 mm) in height.

19.2.3.2.1 External insulation shall not conceal any access panel unless a label is attached to the insulation that clearly indicates the exact location of the access panel, and the insulation is installed for ease of removal or ease of removal with the access panel.

19.2.3.3 Unobstructed access shall be provided through the ceiling or wall to gain access for inspection and service of the damper's working parts.

19.2.4* Wall Opening. If the opening size in the wall is larger than the maximum listing size of the damper, an approved fire-rated damper mullion shall be used to separate the listed dampers, or the dampers shall be separated by construction equal to the fire-rated assembly.

19.3 Operational Test.

19.3.1 Fire Dampers. After the installation of a damper is completed, an operational test shall be conducted.

19.3.1.1 The damper shall fully close from the open position.

19.3.1.2 When equipped with smoke detection activation, the smoke detector shall be activated in accordance with the requirements of *NFPA 72, National Fire Alarm and Signaling Code*.

19.3.1.3 For dynamic dampers, it shall be verified that the system airflow where the damper is installed is within the velocity rating of the damper listing.

19.3.1.4 The operational test shall verify that there are no obstructions to the operation of the damper.

19.3.1.5 The operational test shall verify that there is full and unobstructed access to the fire damper and all listed components.

19.3.1.6 All indicating devices shall be verified to work and report to the intended location.

19.3.1.7* The fusible link operating temperature shall be in accordance with NFPA 90A, *Standard for the Installation of Air-Conditioning and Ventilating Systems*, and ANSI/UL 33, *Standard for Heat Responsive Links for Fire-Protection Services,* temperature classifications and ratings.

19.3.2 Combination Fire/Smoke Dampers. After the installation of a dynamic combination fire/smoke damper is complete, an operational test shall be conducted.

19.3.2.1 The test shall determine that the system has been installed and functions as intended.

19.3.2.2 The operational test shall be conducted under non-fire HVAC airflow conditions as well as static flow conditions.

19.3.2.3 The operational test shall verify that there are no obstructions to the operation of the dynamic combination fire/smoke damper.

19.3.2.4 The operational test shall verify that there is full and unobstructed access to the dynamic combination fire/smoke damper and all listed components.

19.3.2.5 All indicating devices shall be verified to work and report to the intended location.

19.3.2.6 The dynamic combination fire/smoke damper shall also meet the testing requirements contained in Chapter 6 of NFPA 105, *Standard for Smoke Door Assemblies and Other Opening Protectives*.

19.3.3 Inspection. Following completion of the test, a visual inspection shall be made of the assembly to ensure no obstructions have been introduced.

19.3.4 Documentation. All inspections and testing shall be documented, indicating the location of the fire damper, date(s) of inspection, name of inspector, and deficiencies discovered. The documentation shall have a space to indicate when and how the deficiencies were corrected.

19.4* Periodic Inspection and Testing.

19.4.1 Each damper shall be tested and inspected 1 year after installation.

19.4.1.1 The test and inspection frequency shall then be every 4 years, except in hospitals, where the frequency shall be every 6 years.

19.4.2 All tests shall be completed in a safe manner by personnel wearing personal protective equipment.

19.4.3 Full unobstructed access to the fire or combination fire/smoke damper shall be verified and corrected as required.

19.4.4 If the damper is equipped with a fusible link, the link shall be removed for testing to ensure full closure and lock-in-place if so equipped.

19.4.5 The operational test of the damper shall verify that there is no damper interference due to rusted, bent, misaligned, or damaged frame or blades, or defective hinges or other moving parts.

Copyright 2014 National Fire Protection Association (NFPA). Licensed, by agreement, for individual use and download on October 4, 2014 to LEADER and READER for designated user PATTARAPORN SRITRAKOOL. No other reproduction or transmission in any form permitted without written permission of NFPA. For inquires or to report unauthorized use, contact licensing@nfpa.org.

19.4.6 The damper frame shall not be penetrated by any foreign objects that would affect fire damper operations.

19.4.7 The damper shall not be blocked from closure in any way.

19.4.8 The fusible link shall be reinstalled after testing is complete.

19.4.8.1 If the link is damaged or painted, it shall be replaced with a link of the same size, temperature, and load rating.

19.4.9 All inspections and testing shall be documented, indicating the location of the ceiling radiation damper, fire damper, or combination fire/smoke damper, date of inspection, name of inspector, and deficiencies discovered.

19.4.9.1 The documentation shall have a space to indicate when and how the deficiencies were corrected.

19.4.10 All documentation shall be maintained and made available for review by the AHJ.

19.4.11 Periodic inspections and testing of a combination fire/smoke damper shall also meet the inspection and testing requirements contained in Chapter 6 of NFPA 105, *Standard for Smoke Door Assemblies and Other Opening Protectives*.

19.5 Maintenance.

19.5.1 Reports of changes in airflow or noise from the duct system shall be investigated to verify that they are not related to damper operation.

19.5.2* All exposed moving parts of the damper shall be dry lubricated as required by the manufacturer.

19.5.3 If the damper is not operable, repairs shall begin without delay.

19.5.4 Following any repairs, the damper shall be tested for operation in accordance with Section 19.4.

19.5.5 All maintenance shall be documented in accordance with 19.4.9 and 19.4.10.

19.5.6 Maintenance of a combination fire/smoke damper shall also meet the maintenance requirements contained in Chapter 6 of NFPA 105, *Standard for Smoke Door Assemblies and Other Opening Protectives*.

Chapter 20 Fabric Fire Safety Curtains

20.1 General.

20.1.1* This chapter shall cover the materials, fabrication, installation, operation, maintenance, and testing of fabric fire safety curtains and fire safety curtain assemblies used for the protection of proscenium openings.

20.1.2 Fire safety curtain assemblies shall be designed to protect the audience against the spread of fire and smoke between the auditorium and the stage.

20.1.3 Fire Safety Curtain Assembly Designer.

20.1.3.1 A fire safety curtain system is a specialized fire protection system, and its plans and specifications shall be developed in accordance with this standard by qualified persons who are experienced in the design, application, installation, and testing of fire safety curtain assemblies.

20.1.3.2 The assembly designer shall be identified on the system design documents. Evidence of qualifications shall be provided when requested by the AHJ.

20.1.4 Assembly Installer.

20.1.4.1 Installation personnel shall be supervised by qualified persons who are experienced in the installation, inspection, and testing of fire safety curtain assemblies.

20.1.4.2* Evidence of qualifications shall be provided when requested by the AHJ.

20.1.5 Definitions.

20.1.5.1 Batten. A horizontal pipe, tube, or other structural shape in a pocket of or attached to a fire safety curtain. *(See 3.3.12.)*

20.1.5.2 Bumper (Fire Safety Curtain). A filled fabric pocket below the bottom batten or frame member of a fire safety curtain designed to press against the floor. *(See 3.3.17.)*

20.1.5.3 Fire Safety Curtain. A curtain of fire-resistant fabric and noncombustible framing materials. *(See 3.3.61.)*

20.1.5.3.1 Brail Fire Safety Curtain. A fire safety curtain that folds up and stores in the space above a proscenium opening. *(See 3.3.61.1.)*

20.1.5.3.2 Straight-Lift Fire Safety Curtain. A fire safety curtain consisting of one or more flat panel(s) that lifts up and stores above the proscenium opening. *(See 3.3.61.2.)*

20.1.5.3.3 Unframed Fire Safety Curtain. A straight lift fire safety curtain containing no internal vertical framing members. *(See 3.3.61.3.)*

20.1.5.4 Fire Safety Curtain Assembly. A fire safety curtain and all other components necessary to form a complete assembly. *(See 3.3.62.)*

20.1.5.4.1 Framed Fire Safety Curtain Assembly. A straight lift–type fire safety curtain assembly containing a rigid perimeter frame and internal members. *(See 3.3.62.1.)*

20.1.5.5 Proscenium Wall. The wall that separates the stage from the auditorium or house. [**5000,** 2012] *(See 3.3.93.)*

20.1.5.6 Purchase Line (Hand Line). The line attached to the counterweight for manual opening and closing of the fire safety curtain. *(See 3.3.94.)*

20.1.5.7 Roller Guide/Metal Track Side Edge Guide System. Continuous tracks with captive trolleys or rollers at each vertical edge of the curtain used to guide and restrain the fire safety curtain. *(See 3.3.98.)*

20.1.5.8 Side Guide Cable System. A continuous vertical cable at each vertical edge of the curtain used to guide and restrain the fire safety curtain. *(See 3.3.106.)*

20.1.5.9 Stay Chain. A chain used to support the fire safety curtain. *(See 3.3.120.)*

20.1.5.10 Vertical Guide Pocket. A partial enclosure at the vertical edge of the proscenium that protects the vertical edges and guides of a fire safety curtain. *(See 3.3.135.)*

20.2 Fabric Fire Safety Curtain Components.

20.2.1 Fire Safety Curtain Fabric and Testing.

20.2.1.1 Fabric fire safety curtains shall be made of one or more thicknesses of a noncombustible base fabric, which shall

Copyright 2014 National Fire Protection Association (NFPA). Licensed, by agreement, for individual use and download on October 4, 2014 to LEADER and READER for designated user PATTARAPORN SRITRAKOOL. No other reproduction or transmission in any form permitted without written permission of NFPA. For inquires or to report unauthorized use, contact licensing@nfpa.org.

be permitted to have a high temperature coating, provided the modified fabric meets the test requirements of Section 20.2.

20.2.1.2 Fire safety curtain fabric shall have minimum tensile strength requirements of 400 lb/in. (70 N/mm) in both the warp (lengthwise) and fill directions.

20.2.1.3* ASTM D5034, *Standard Test Method for Breaking Strength and Elongation of Textile Fabrics (Grab Test)*, shall be used for strength tests of fabric used in fire safety curtains.

20.2.1.4 Fire safety curtain fabric shall not lose over 35 percent of the warp (lengthwise) strength when subjected to 50 cycles in accordance with ASTM D4157, *Standard Test Method for Abrasion Resistance of Textile Fabrics (Oscillatory Cylinder Method)*, using the 100-grit emery paper as the abradant with 6 lb (22 N) tension and 3 lb (11 N) compression force.

20.2.1.5* Fire safety curtains shall be constructed of continuous strips of fabric sewn together vertically using minimum 1 in. (25.4 mm) wide overlap construction with two rows of lockstitch stitching using flame-resistant thread in accordance with ASTM D6193, *Standard Practice for Stitches and Seams*.

20.2.1.6 All functional stitching on the curtain shall consist of two rows of lockstitch stitching using flame-resistant thread.

20.2.1.7 Side hems shall be three thicknesses of curtain material and a minimum of 1½ in. (38 mm) wider than the metal reinforcing strips or guide brackets.

20.2.1.8 Side hems shall not be less than 4 in. (102 mm) in width.

20.2.1.9 The fabric on framed fire safety curtains shall not be required to have side hems if supported along the full vertical length by framing elements.

20.2.1.10 All styles of fire safety curtains shall have pockets at the top and bottom of the curtain of a size to contain the required pipe batten sizes.

20.2.1.11 Framed fire safety curtains shall not have pockets for battens at the top or the bottom if the fabric is supported along the full horizontal length by the framing elements.

20.2.1.12* Exposed unfinished edges shall not be permitted.

20.2.1.13 Fire safety curtain fabrics shall be tested in accordance with NFPA 701, *Standard Methods of Fire Tests for Flame Propagation of Textiles and Films*, test method 2.

20.2.1.14* A fire safety curtain sample with a minimum of two vertical seams shall be subjected to the standard fire test specified in ASTM E119, *Standard Test Methods for Fire Tests of Building Construction and Materials*, as applicable to nonbearing walls and partitions for a period of 30 minutes.

20.2.1.14.1 There shall be a positive furnace pressure differential between the furnace and the surrounding area during the duration of the test such that at least the upper two-thirds of the specimen is under positive pressure.

20.2.1.14.2 The fire safety curtain shall overlap the furnace edges so as to form a seal to the top and sides.

20.2.1.14.3* The fire safety curtain shall have a bottom pocket containing a Schedule 40 pipe with a minimum nominal 2 in. (51 mm) diameter. Framed curtains shall not require a pocket if they meet the requirements of 20.2.1.11.

20.2.1.14.4 The unexposed surface of the fire safety curtain shall not flame, and smoke shall not penetrate the material during the test period.

20.2.1.14.5 Unexposed surface temperature measurements and hose stream testing shall not be required for fire safety curtains.

20.2.2 Fire Safety Curtain Labels.

20.2.2.1 The fire safety curtain shall be labeled for compliance with the test methods specified in Chapter 20.

20.2.2.2* The label shall be permanently attached to the fire safety curtain and indicate the curtain fabric's fire resistance rating.

20.2.2.3 The label shall be within 5 ft (1.5 m) of the bottom of the fire safety curtain and in an area so that it can be easily read when the fire safety curtain is in the fully closed position.

20.2.3 Bumper (Yield Pad).

20.2.3.1* A bumper (yield pad) shall be sewn either to the bottom of a fire safety curtain assembly with two rows of lockstitch flame-resistant thread on each side or to a separate piece securely attached under the bottom batten or framing member of a fire safety curtain.

20.2.3.2 The bumper (yield pad) shall be a compressible pad, a minimum of 3 in. (76 mm) in diameter, made with an outer covering of the curtain fabric and filled with fiberglass or other noncombustible materials at a minimum 3 lb/ft^3 (48 kg/m^3) density and shall be oriented in a manner that allows the weight of the bottom batten or frame member to compress the yield pad firmly against the stage floor.

20.3 Installation.

20.3.1 A fire safety curtain shall be suspended from the building structure using stay chains and other rigging and lifting equipment as described in Section 20.6.

20.3.2 The fire safety curtain shall extend a minimum of 18 in. (457 mm) on each side of the proscenium opening and a minimum of 24 in. (610 mm) above the top of the proscenium opening.

20.4 Fire Safety Curtain Assemblies.

20.4.1 Guides.

20.4.1.1 Cable Guides.

20.4.1.1.1 The side guide cable system shall utilize bronze alloy or other spool-type edge guides attached to the sides of the fire safety curtain.

20.4.1.1.2 Spool guides shall be attached using three or more machine screw assemblies or an equivalent attachment system.

20.4.1.1.3 Guides shall be on 18 in. (457 mm) maximum vertical centers.

20.4.1.1.4 The guide cable shall be secured to the building structure or to the vertical guide pocket.

20.4.1.1.5 The side guide cable utilized shall be a minimum ¼ in. (6.35 mm) diameter 7 × 19 galvanized aircraft cable installed using thimbles and two forged wire rope clips or one swage fitting at each end of the guide cables. A minimum ⅜ in. (9.5 mm) moused turnbuckle or equivalent mechanical tensioning means shall be installed in the guide cable for adjustment.

Copyright 2014 National Fire Protection Association (NFPA). Licensed, by agreement, for individual use and download on October 4, 2014 to LEADER and READER for designated user PATTARAPORN SRITRAKOOL. No other reproduction or transmission in any form permitted without written permission of NFPA. For inquires or to report unauthorized use, contact licensing@nfpa.org.

20.4.1.2 Roller Guides.

20.4.1.2.1 Roller guides shall have at least two roller or ball bearing steel wheels each.

20.4.1.2.2 Each roller guide shall be attached to the fire safety curtain's metal stiffened edges by way of three machine screw assemblies or an equivalent attachment system.

20.4.1.2.3 Roller guides shall be on 18 in. (457 mm) maximum vertical centers.

20.4.1.2.4 Tracks shall be minimum 14 gauge galvanized steel tracks.

20.4.1.2.5 Tracks shall be installed for the entire height of the vertical guide pockets, less 3 in. (76 mm) at the bottom.

20.4.1.3 Knife Guides.

20.4.1.3.1 Framed fire safety curtains shall be guided by knife guides.

20.4.1.3.2 The side edge guide system shall consist of vertical steel flat edges parallel to the face of the curtain.

20.4.1.3.3 This edge guide system shall be attached to the inside of the entire height of the vertical guide pockets on both sides of the proscenium.

20.4.1.3.4 A minimum of two guide shoes per side shall be required.

20.4.1.3.5 The guide shoe shall be fitted to the above-edge guide system and shall be bolted to the sides of the framed fire safety curtain to guide the framed fire safety curtain through the entire vertical travel of the curtain.

20.4.2 Edge Reinforcement.

20.4.2.1 Both vertical edges of the fire safety curtain shall be reinforced with a minimum 6 in. (152 mm) wide 16 gauge sheet metal edging except as indicated in 20.4.2.2.

20.4.2.2 Unframed fire safety curtain assemblies for openings 34 ft (10.4 m) or less in width and 18 ft (5.5 m) or less in height shall be permitted to have a spool-type side edge system without an edge reinforcing system.

20.4.2.3 Edging shall be affixed to both the front and back for the entire height of the fire safety curtain.

20.4.2.4 An alternative edge guide system using a minimum 2 in. (50.8 mm) wide × 1½ in. (38.1 mm) wide × ⅛ in. (3.2 mm) thick steel angle iron bolted or riveted to both vertical edges of the fire safety curtain for its full height shall be permitted.

20.4.2.5 Edge reinforcement systems shall be fastened to the side edge hems with a minimum of two horizontal plated tubular or solid steel rivets or bolts spaced not more than 6 in. (152 mm) on center vertically.

20.4.3 Framed Fire Safety Curtain Assembly.

20.4.3.1 Framed fire safety curtain assemblies shall be power operated.

20.4.3.2 The frame shall be constructed of noncombustible materials and shall have a minimum thickness of 4 in. (102 mm).

20.4.3.3 When fire safety curtain fabric is used to cover one side of the frame, it shall be fastened to the audience side of the frame and attached along all four sides of the frame and the intermediate framing members.

20.4.3.4 When fire safety curtain fabric is used to cover both sides of the frame, it shall be fastened to the frame along all four sides of the frame and the intermediate framing members.

20.4.4 Unframed Fire Safety Curtain Assembly.

20.4.4.1 Guide Systems.

20.4.4.1.1 Unframed fire safety curtain assemblies shall use a roller guide/metal track side edge guide system.

20.4.4.1.2 For openings 42 ft (12.8 m) or less in width and 22 ft (6.7 m) or less in height, fire safety curtain assemblies shall be permitted to have a side guide cable system.

20.4.5 Brail Fire Safety Curtain Assembly. A brail fire safety curtain assembly shall meet the requirements of Section 20.2, with the following modifications:

(1) Fire safety curtains shall have minimum 5 percent fullness in the height only.
(2) The side guide cable system shall utilize bronze alloy spool guides on maximum 18 in. (457 mm) vertical centers on both edges.
(3) Edge reinforcement shall not be required.
(4) Each spool guide shall be attached to the fire safety curtain's sides by three or more machine screw assemblies or an equivalent attachment system.
(5) The side guide cable utilized shall be a minimum ¼ in. (6.4 mm) diameter 7 × 19 galvanized aircraft cable installed using at least ⅜ in. (9.5 mm) moused turnbuckles, thimbles, and two forged wire rope clips or one swage fitting at each end of the guide cables.
(6) The guide cable shall be secured to the building structure or to the vertical guide pocket.
(7) Vertical lift lines shall be a minimum of ¼ in. (6.4 mm) diameter, 7 × 19 galvanized aircraft cable and shall be spaced on a maximum of 18 ft (5.5 m) centers.
(8) The outermost two cables shall be a maximum of 3 ft (914 mm) from the curtain's vertical edges.
(9) Each lift line shall operate on a path reinforced with a layer of the fire safety curtain's fabric or equivalent webbing, with plated welded steel D rings on maximum 18 in. (457 mm) vertical centers.
(10) The lift lines shall create an accordion fold–type storage arrangement.
(11) The batten pocket shall not be cut to facilitate the installation of lift lines.
(12) Each lift line connecting to the bottom batten shall use a single-piece (clamshell-style) steel pipe clamp a minimum of ⅛ in. (3.2 mm) thick.

20.5 Supporting Construction. A registered design professional shall certify that the supporting structure will support all loads imposed by the installation and use of the fire safety curtain assembly.

20.6 Rigging and Lifting Equipment.

20.6.1 Lift lines, blocks, drums, stay chains, additional support steel, and fasteners shall be constructed to a minimum 8:1 design factor based on calculated dead loads.

20.6.2 Fire safety curtain assemblies other than straight lift unframed fire safety curtains for proscenium openings less than 850 ft^2 (79 m^2) shall be power operated.

20.6.3 Lift lines and their supporting components and termination shall be rated by the manufacturer for the imposed

Copyright 2014 National Fire Protection Association (NFPA). Licensed, by agreement, for individual use and download on October 4, 2014 to LEADER and READER for designated user PATTARAPORN SRITRAKOOL. No other reproduction or transmission in any form permitted without written permission of NFPA. For inquires or to report unauthorized use, contact licensing@nfpa.org.

load and shall be installed in accordance with the manufacturer's instructions.

20.6.4 Fire safety curtain assemblies shall be designed to operate in emergency and nonemergency conditions for all imposed loads, including dead loads of the assembly, and for a pressure differential of 2 lb/ft^2 (9.8 kg/m^2) on the fire safety curtain over the area of the proscenium opening.

20.6.5 Vertical Guide Pocket.

20.6.5.1 Vertical guide pockets shall be used on all fire safety curtain assembly installations.

20.6.5.2* Vertical guide pockets shall contain the vertical edges of the fire safety curtain assembly and the guide mechanisms used both to guide the fire safety curtain assembly and to prevent binding during operation.

20.6.5.3* Vertical guide pockets shall extend vertically from the stage floor to a point above the top of the open fire safety curtain assembly and shall be fastened or welded to the proscenium wall.

20.6.5.4 Vertical guide pockets shall be fabricated using a minimum of structural steel channel and ¼ in. (6.4 mm) steel plates or ¼ in. (6.4 mm) thick steel formed shapes and plates.

20.6.5.4.1 Steel shapes and plates shall be connected with minimum ⅜ in. (9.5 mm) diameter grade 5 bolts.

20.6.5.5 Vertical guide pockets shall be set back from the vertical edges of the proscenium opening.

20.6.5.5.1 This distance shall be determined by the 18 in. (457 mm) fire safety curtain assembly overlap with the side of the proscenium.

20.6.5.6 Vertical guide pockets shall overlap the fire safety curtain a minimum of 12 in. (305 mm).

20.6.5.7 Straight-lift proscenium fire safety curtain assemblies shall have vertical guide pockets 3 in. (76.2 mm) deeper than the thickest batten or frame member.

20.6.5.7.1 The minimum depth for a vertical guide pocket shall be 6 in. (152 mm).

20.6.5.7.2 For framed fire safety curtain assemblies and brail fire safety curtain assemblies, the vertical guide pocket plates shall be removable for not less than the height of the curtain.

20.6.5.7.3 For unframed fire safety curtain assemblies, the vertical guide pocket plates shall be removable for a minimum of the bottom 10 ft (3.1 m) of the vertical guide.

20.6.5.8 Brail fire safety curtain assemblies shall have vertical guide pockets a minimum of 8 in. (203 mm) deep.

20.6.6 Battens. Battens in unframed fire safety curtains shall be designed to limit vertical deflection to 1/180 (0.006) of the span between any two lift lines with no pressure differential.

20.6.6.1 The bottom batten in unframed fire safety curtains shall weigh a minimum of 3.65 lb/ft (5.43 kg/m).

20.6.6.2 Batten joints shall utilize internal splicing sleeves.

20.6.6.3 Threaded couplings shall not be permitted.

20.6.6.4 Spliced battens shall have at least the same overall capacity, deflection, and strength as the batten.

20.6.7 Stay Chains.

20.6.7.1 Fire safety curtain stay chains shall be minimum welded steel chain grade 30 fastened to the curtain's top batten or frame.

20.6.7.2 The number of stay chains shall be equal to the number of lifting cables.

20.6.7.2.1 Stay chains shall be located within 4 ft (1.2 m) of the ends of the curtain, and remaining chains shall be equally spaced.

20.6.7.3 Stay chains shall be fastened to the gridiron, the structural steel of the building, or the proscenium wall and shall be sized for the shock loads imposed.

20.6.7.4 Stay chains shall be adjusted to support the fire safety curtain when it is closed so that the bottom batten is resting on the bumper.

20.6.7.5 For brail-style fire safety curtains, the stay chains shall be used to hold the top batten in a stationary position.

20.6.8 Counterweight Arbor Assemblies and Track.

20.6.8.1 Manually rigged counterweight fire safety curtain assemblies shall have a ¾ in. (19 mm) minimum diameter purchase line fastened to both the top and bottom of the counterweight arbor.

20.6.8.1.1 Purchase lines shall be a synthetic polyester rope having a minimum tensile strength of 8500 lb (3856 kg).

20.6.8.2 Counterweight arbor assembly and associated hardware shall support the expected loads.

20.6.8.3 The counterweight arbor top and bottom components shall be connected with a minimum of two ASTM A36, *Standard Specification for Carbon Structural Steel*, steel rods, each a minimum of ¾ in. (19 mm) in diameter, with one spreader (tie) plate for every 2 ft (0.61 m) of arbor length.

20.6.8.3.1 The top spreader (tie) plate shall be a locking type and shall secure to each arbor rod.

20.6.8.4 Counterweights shall have a shape so that they cannot accidentally leave the counterweight arbor.

20.6.8.5 The arbor top and bottom components shall be fitted with a guide assembly made of an oil-less-type material.

20.6.8.6 Guide tracks shall be structural tees or angles that are fastened not more than 5 ft (1.5 m) on center to a supporting structure.

20.6.8.6.1 Guide tracks shall be installed plumb and parallel.

20.6.8.6.2 All joints shall have a smooth transition between track sections.

20.6.8.6.3 Guide tracks shall be braced to prevent movement.

20.6.8.6.4 The head block shall be mounted so that the lift lines do not impose a horizontal load into the guide track system through the counterweight arbor.

20.6.9 Winches.

20.6.9.1 Winches shall be sized for design loads.

20.6.9.2 Adjustable hydraulic or electric speed-governing devices shall control descent upon emergency release.

20.6.9.3* Winches shall be designed for a service factor of 1.25:1.

Copyright 2014 National Fire Protection Association (NFPA). Licensed, by agreement, for individual use and download on October 4, 2014 to LEADER and READER for designated user PATTARAPORN SRITRAKOOL. No other reproduction or transmission in any form permitted without written permission of NFPA. For inquires or to report unauthorized use, contact licensing@nfpa.org.

20.6.10 Controls.

20.6.10.1 Winch operation of the fire safety curtain assembly for nonemergency operation shall be accomplished by the use of a minimum of one control station.

20.6.10.2 Controls shall be unobstructed at all times.

20.6.10.3 The operator shall have a clear view of operation of the fire safety curtain assembly.

20.6.10.4 Function labels shall be permanent and located on the buttons or on the control station adjacent to the buttons.

20.6.10.5 A latching emergency stop button shall be located at every control station for stopping emergency operation but shall not prevent or impede emergency closing of the fire safety curtain.

20.6.10.6* A sign shall be mounted adjacent to each fire safety curtain control station stating the following:

NONEMERGENCY FIRE SAFETY CURTAIN
OPERATION ONLY

20.7 Operation of the Fire Safety Curtain Assembly.

20.7.1 General.

20.7.1.1* The fire safety curtain assembly shall be closed at all times except when there is an event, rehearsal, or similar activity.

20.7.1.2 Automatic emergency closing shall be by gravity.

20.7.1.3 Emergency operation shall be verified by the owner every 90 days.

20.7.1.4 A signed and dated testing report shall be kept on file with the owner for review by the AHJ as an ongoing acceptance procedure.

20.7.2 Nonemergency Operation.

20.7.2.1 Nonemergency operation of the fire safety curtain assembly shall be accomplished by one person.

20.7.2.2 For nonemergency operation, controls shall require constant pressure to close the fire safety curtain.

20.7.2.2.1 As an alternative, the fire safety curtain shall be provided with a continuous sensing device attached to the bottom of the curtain to stop or reverse the curtain upon contact with an obstruction.

20.7.3 Emergency Operation.

20.7.3.1* The fire safety curtain assembly shall be activated by manual emergency operation, fusible link, and rate-of-rise heat detection located above the stage.

20.7.3.2 The rate-of-rise heat detection as required in 20.7.3.1 shall be ultra-fast rate-of-rise provided at the ceiling near the stage side of the proscenium wall, installed in accordance with the prescriptive or performance-based requirements of *NFPA 72, National Fire Alarm and Signaling Code*.

20.7.3.3 To provide for automatic emergency release when exposed to fire, an emergency control line (fire control line) shall be provided that utilizes a minimum of ⅜ in. diameter rope or 3⁄32 in. (2.4 mm) diameter 7 × 19 specialty cord (aircraft cable) fitted with fusible links.

20.7.3.3.1 Melting of a fusible link shall result in the fire safety curtain automatically closing.

20.7.3.3.2 The emergency control line (fire control line) shall contain one or more fusible links spaced every 15 linear ft (4.6 m) of the control line.

20.7.3.3.2.1 One or more fusible links shall be spaced no more than 7.5 ft (2.3 m) from the vertical rise of the emergency control line.

20.7.3.3.3 The fusible links shall be installed in accordance with 4.1.2.

20.7.3.3.4 The emergency control line (fire control line) shall extend up both sides and across the top of the stage side of the proscenium opening and within 12 in. (305 mm) of the roof support structure or ceiling.

20.7.3.3.5 Fusible links shall not be placed in the dead air space illustrated in Figure 4.7.1(a).

20.7.3.4* Manual emergency closing of the curtain shall be accomplished by a quick-release mechanism. There shall be at least two manual release mechanisms located on the stage side of the proscenium wall, one right of the proscenium opening and one left of the proscenium opening.

20.7.3.4.1 The emergency control line (fire control line) shall not be cut or severed.

20.7.3.5* Signage specific to the action necessary to activate the manual emergency closing device shall be located within 2 ft (0.61 m) of each manual emergency closing device.

20.8 Acceptance Testing.

20.8.1 The complete installation of every fire safety curtain shall be subjected to operating tests to ensure that the fire safety curtain assembly will descend automatically.

20.8.1.1 The fire safety curtain assembly shall be deemed to have passed the requirement in 20.8.1 when the assembly has been demonstrated to successfully descend in an emergency release condition three consecutive times.

20.8.2 In an emergency, the fire safety curtain shall have an average closing speed of not less than 6 in./sec (152 mm/sec) and not more than 24 in./sec (610 mm/sec).

20.8.2.1 The last 8 ft (2.4 m) of travel shall require not less than 5 seconds.

20.8.2.2 Acceptance testing shall verify proper descent of the fire safety curtain assembly for emergency service.

20.8.3 The above tests shall be conducted when the stage smoke vents are closed and then again when the smoke vents are open.

20.8.4 The installing contractor shall notify the AHJ prior to conducting acceptance testing.

20.8.4.1 Acceptance testing shall be conducted by the installing contractor in accordance with the requirements of Chapter 20.

20.8.5* The fire safety curtain shall be capable of automatic closing without the use of normal building-applied power.

20.8.6 The completed installation of a fire safety curtain assembly shall be inspected and tested to confirm that all emergency and routine operating components function in accordance with Chapter 20.

20.8.7 The owner shall be provided with a manual by the manufacturer detailing operation (both manual and emergency);

Copyright 2014 National Fire Protection Association (NFPA). Licensed, by agreement, for individual use and download on October 4, 2014 to LEADER and READER for designated user PATTARAPORN SRITRAKOOL. No other reproduction or transmission in any form permitted without written permission of NFPA. For inquires or to report unauthorized use, contact licensing@nfpa.org.

maintenance; testing procedures; name, address, and phone number of the manufacturer; and date of installation.

20.9 Care and Maintenance.

20.9.1 The rigging system shall be inspected annually.

20.9.1.1 The annual rigging inspection shall be performed by a qualified person.

20.9.1.2 Inspection shall include all components of the fire safety curtain assembly and operation, including 20.7.3.

20.9.1.3 Retraining of the owner and staff shall be mandatory during each annual inspection.

20.9.1.4 Signed and dated inspection reports, including a list of who attended the training, shall be kept on file with the owner for review by the AHJ as an ongoing acceptance procedure.

20.9.2 Unless temporary measures have been approved by the AHJ, repairs required for emergency operation of the fire safety curtain assembly shall be completed before the facility can be occupied for an event with an audience.

20.9.3 Repairs not affecting the emergency closing of the fire safety curtain shall be completed within 30 days.

20.9.4 Maintenance shall be carried out in accordance with the manufacturer's recommendations and schedule.

20.9.5 All repairs and maintenance shall be recorded in a repair/maintenance log.

20.9.5.1 This log shall include the date, the name of the person repairing or maintaining, and a description detailing parts affected, maintained, adjusted, and/or replaced.

20.9.5.2 This report shall be kept on file with the owner for review by the AHJ as an ongoing acceptance procedure.

Annex A Explanatory Material

Annex A is not a part of the requirements of this NFPA document but is included for informational purposes only. This annex contains explanatory material, numbered to correspond with the applicable text paragraphs.

A.1.1 See Annex K for general information about fire doors.

A.1.1.1 No fire test standard requirement currently exists to which fabric fire safety curtain assemblies can be tested. Only the curtain fabric is tested in accordance with ASTM E119, *Standard Test Methods for Fire Tests of Building Construction and Materials*. The perimeter and internal framework and all supporting, guide, and operating components used in specific applications are not tested. Variations in size of proscenium openings and the amount of side and head clearances available for individual stages dictate the number of variations in design of the assemblies.

A.1.1.2 For requirements on their installation, see NFPA 82, *Standard on Incinerators and Waste and Linen Handling Systems and Equipment*, and NFPA 232, *Standard for the Protection of Records*.

A.1.1.3 For requirements on the installation of hoistway doors for elevators and dumbwaiters, see the applicable sections of ASME A17.1, *Safety Code for Elevators and Escalators*, or CSA B44, *Safety Code for Elevators*.

A.1.1.4 The fire performance evaluation of these assemblies is tested in accordance with ASTM E119, *Standard Test Methods for Fire Tests of Building Construction and Materials*, for horizontal access doors; NFPA 252, *Standard Methods of Fire Tests of Door Assemblies*, for fire doors and shutters; NFPA 257, *Standard on Fire Test for Window and Glass Block Assemblies*, for fire windows and glass block; and NFPA 288, *Standard Methods of Fire Tests of Horizontal Fire Door Assemblies Installed in Horizontal Fire Resistance–Rated Assemblies*, for doors in horizontal fire-rated assemblies. It is not the intent of this standard to establish the degree of protection required or to constitute the approval of any product. These are determined by the AHJ.

A.1.2.3 These are determined by the AHJ.

A.1.3 The AHJ might require upgrading of existing installations to meet current standards and requirements only where the lack of compliance with this standard presents a serious fire or life safety hazard. It should be noted that care and maintenance of materials for ongoing and existing installations should be maintained in accordance with the standards under which they were installed. Protected openings provide access, ingress, egress, observation, passage of light, natural ventilation (other than ducts or transfer grilles), or movement through fire-resistive walls and ceilings that have been tested in accordance with ASTM E119, *Standard Test Methods for Fire Tests of Building Construction and Materials*.

A.1.4.1 The development of fire doors and related devices is a continuous process; therefore, this standard is not always current. This standard is intended to be current only at the date of publication.

A.3.2.1 Approved. The National Fire Protection Association does not approve, inspect, or certify any installations, procedures, equipment, or materials; nor does it approve or evaluate testing laboratories. In determining the acceptability of installations, procedures, equipment, or materials, the authority having jurisdiction may base acceptance on compliance with NFPA or other appropriate standards. In the absence of such standards, said authority may require evidence of proper installation, procedure, or use. The authority having jurisdiction may also refer to the listings or labeling practices of an organization that is concerned with product evaluations and is thus in a position to determine compliance with appropriate standards for the current production of listed items.

A.3.2.2 Authority Having Jurisdiction (AHJ). The phrase "authority having jurisdiction," or its acronym AHJ, is used in NFPA documents in a broad manner, since jurisdictions and approval agencies vary, as do their responsibilities. Where public safety is primary, the authority having jurisdiction may be a federal, state, local, or other regional department or individual such as a fire chief; fire marshal; chief of a fire prevention bureau, labor department, or health department; building official; electrical inspector; or others having statutory authority. For insurance purposes, an insurance inspection department, rating bureau, or other insurance company representative may be the authority having jurisdiction. In many circumstances, the property owner or his or her designated agent assumes the role of the authority having jurisdiction; at government installations, the commanding officer or departmental official may be the authority having jurisdiction.

A.3.2.4 Listed. The means for identifying listed equipment may vary for each organization concerned with product evaluation; some organizations do not recognize equipment as listed unless it is also labeled. The authority having jurisdic-

Copyright 2014 National Fire Protection Association (NFPA). Licensed, by agreement, for individual use and download on October 4, 2014 to LEADER and READER for designated user PATTARAPORN SRITRAKOOL. No other reproduction or transmission in any form permitted without written permission of NFPA. For inquires or to report unauthorized use, contact licensing@nfpa.org.

tion should utilize the system employed by the listing organization to identify a listed product.

A.3.3.5 Astragal. Astragals are used to protect against weather conditions, to minimize the passage of light between the doors, to reduce sound transmission or to retard the passage of smoke, flame, or gases during a fire, and, in the case of a Dutch door, also to ensure that the lower leaf of the door closes in conjunction with the upper leaf.

A.3.3.5.2 Split Astragal. Split astragals can be used where overlapping astragals are not required by the listing of the door.

A.3.3.7 Automatic-Closing Door. It is recognized that closed fire doors protect openings against the spread of fire and smoke. Automatic-closing doors normally are open, and while they are very reliable, there is always the possibility that they will not close when required due to blockage, maintenance problems, or other unforeseen difficulties. Therefore, it is desirable that when buildings are unoccupied, these doors are closed.

A.3.3.24 Classified. The classification process is performed by an organization acceptable to the AHJ.

A.3.3.41 Double Egress Doors. See Figure A.3.3.41.

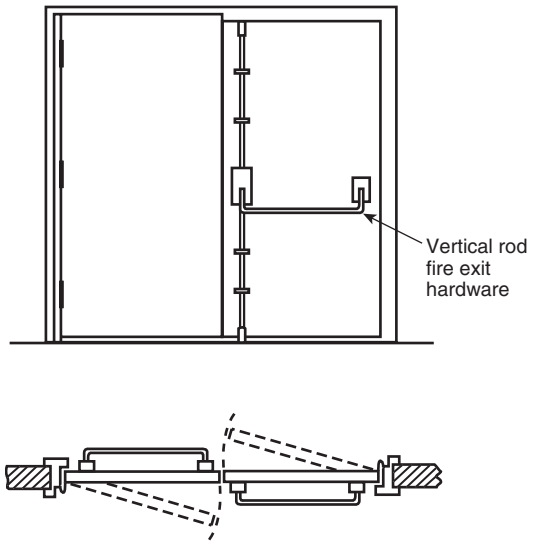

FIGURE A.3.3.41 Double Egress Door and Frame.

A.3.3.46 Field Modifications. During installation, preparations made to fire door assemblies, such as those contained in Chapter 4, are not considered to be field modifications.

A.3.3.49 Fire Door. The fire protection rating of a fire door presumes that the door is installed with the appropriate frame, hardware, and other accessories required by this standard. In any instance where any of the required elements is omitted, the assembly rating is void for the purposes of this standard and the opening protection is not considered equivalent to the labeled or otherwise indicated fire protection rating of the door component.

A.3.3.52 Fire Door Frame for Lights. Various types include transom light, side light, and transom and side light frames. See Figure A.3.3.52(a) through Figure A.3.3.52(c).

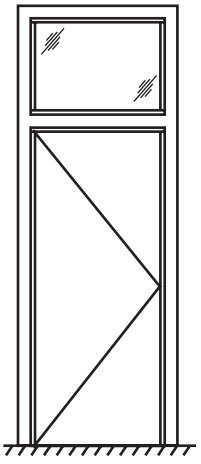

FIGURE A.3.3.52(a) Transom Light Frame.

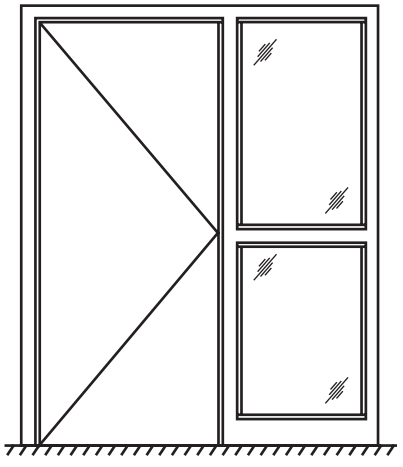

FIGURE A.3.3.52(b) Side Light Frame.

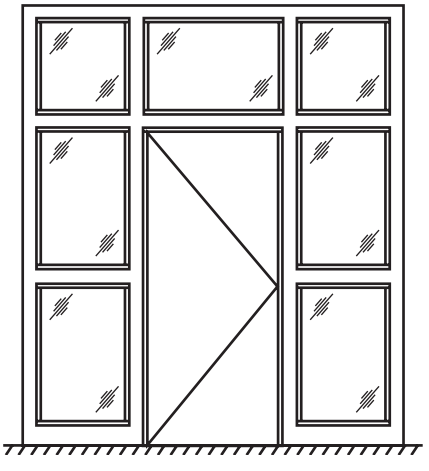

FIGURE A.3.3.52(c) Transom and Side Light Frame.

Copyright 2014 National Fire Protection Association (NFPA). Licensed, by agreement, for individual use and download on October 4, 2014 to LEADER and READER for designated user PATTARAPORN SRITRAKOOL. No other reproduction or transmission in any form permitted without written permission of NFPA. For inquires or to report unauthorized use, contact licensing@nfpa.org.

A.3.3.53 Fire Door Frame for Panels. Various types include transom panel, side panel, and transom and side panel frames. See Figure A.3.3.53(a) through Figure A.3.3.53(d).

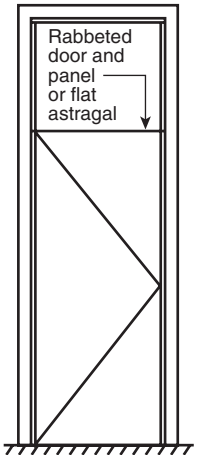

FIGURE A.3.3.53(a) Transom Panel Frame Without Transom Bar.

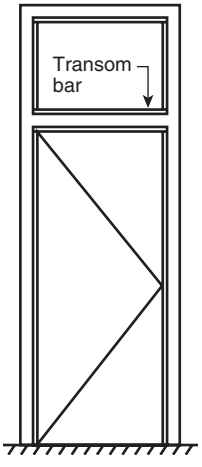

FIGURE A.3.3.53(b) Transom Panel Frame with Transom Bar.

A.3.3.56 Fire Protection Glazing. Safety is also an important consideration where glazing materials are used in fire doors and in fire resistance–rated walls subject to accidental human impact. In such applications, all model building codes contain requirements for safety glazing based on 16 CFR 1201, U.S. Consumer Product Safety Commission, "Standard for Architectural Glazing."

Fire resistance–rated glazing materials are designed to limit the temperature rise on the unexposed surface and to withstand the impact of the hose stream test as required for walls in accordance with ASTM E119, *Standard Test Methods for Fire Tests of Building Construction and Materials*. Fire resistance–rated materials originally were intended to be used as a substitute for fire-resistive walls where large areas of glazing were required or desirable. Fire resistance–rated glazing materials achieve a fire resistance rating, whereas fire protection–rated glazing materials achieve a fire protection rating as defined in NFPA 257, *Standard on Fire Test for Window and Glass Block Assemblies*, and NFPA 252, *Standard Methods of Fire Tests of Door Assemblies*. Fire resistance–rated glazing materials can be permitted to be used as a component of a fire door assembly to meet the fire performance requirements for a fire door rather than as a fire protection–rated glazing material installed in a fire door. The size and area limitations for fire protection–rated glazing materials defined in this standard do not apply to fire resistance–rated glazing materials.

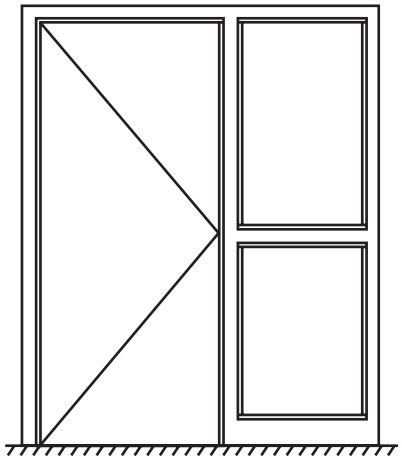

FIGURE A.3.3.53(c) Side Panel Frame.

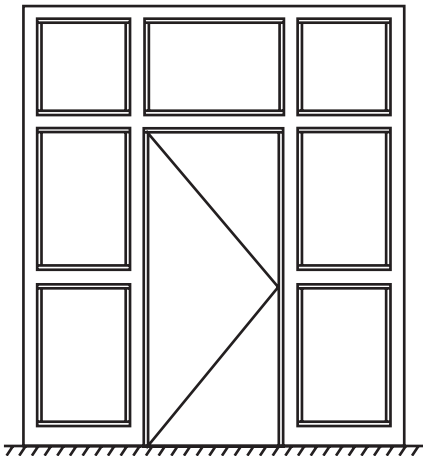

FIGURE A.3.3.53(d) Transom and Side Panel Frame.

A.3.3.70 Glazing Angle Clips. Glazing angles are attached to window members with screws and other approved means to retain the glazing.

A.3.3.87 Multiple Opening Door Frame. See Figure A.3.3.87.

A.3.3.99 Rolling Steel Fire Door. Rolling steel fire doors come in various sizes and can be used for different applications. The term *rolling steel fire door* as used by most manufacturers refers to a product that is intended for use in relatively larger openings. Such products generally utilize larger slat designs and more substantial guides for securing the assembly to the wall. Many manufacturers use the term *counter fire door* in reference

Copyright 2014 National Fire Protection Association (NFPA). Licensed, by agreement, for individual use and download on October 4, 2014 to LEADER and READER for designated user PATTARAPORN SRITRAKOOL. No other reproduction or transmission in any form permitted without written permission of NFPA. For inquires or to report unauthorized use, contact licensing@nfpa.org.

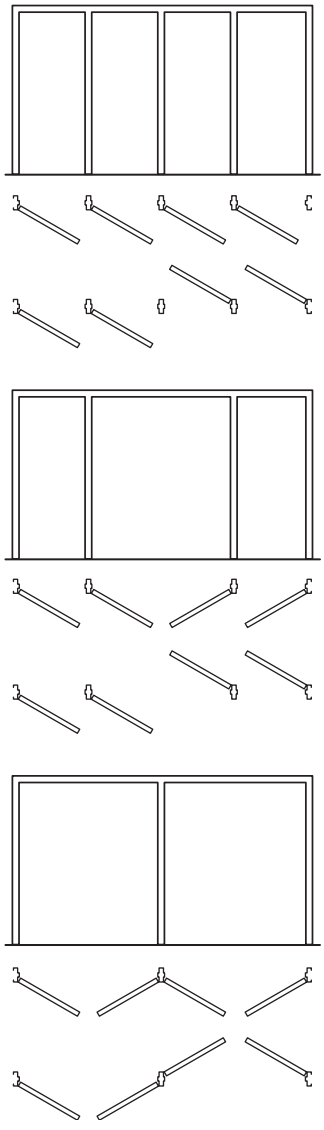

FIGURE A.3.3.87 Examples of Multiple Opening Door Frames.

to products that are typically designed for use on smaller openings such as counters. Their construction is similar to the product that is manufactured as a rolling steel fire door except that the assemblies typically use smaller slat designs and formed steel sections for guides. Counter fire doors serve the same purpose and provide the same level of protection as rolling steel fire doors. *Counter fire door* is an industry-accepted term used for marketing purposes. NFPA 80 does not differentiate between these products. The requirements for rolling steel fire doors are intended to apply to products referred to as counter fire doors.

A.3.3.108 Side Light Frame. See Figure A.3.3.52(b).

A.3.3.109 Side Panel Frame. See Figure A.3.3.53(c).

A.3.3.128 Transom and Side Light Frame. See Figure A.3.3.52(c).

A.3.3.129 Transom and Side Panel Frame. See Figure A.3.3.53(d).

A.3.3.130 Transom Light Frame. See Figure A.3.3.52(a).

A.3.3.132 Transom Panel Frame. See Figure A.3.3.53(a) and Figure A.3.3.53(b).

A.4.1.2 Fusible links are available in temperature ratings of 120°F to 500°F (49°C to 260°C) and in various load ratings.

A.4.2.1 Labels can be permitted to be of metal, paper, or plastics or can be permitted to be stamped or diecast into the item. Labels should not be removed, defaced, or made illegible while the door is in service. If the label on an existing fire door has been removed or is no longer legible, it is acceptable to verify the rating of the fire door through other means acceptable to the AHJ such as an inspection or certification service that provides acceptable documentation.

A.4.2.5.2 Because component elements that are not part of an assembly listing can be interchanged on a listed fire door, it is the intent of this committee to permit a component part listed by one organization acceptable to the AHJ to be installed on a door listed by another such organization.

A.4.3.1 Doors are of several classifications, types, and methods of operation. Fire door assemblies consist of individually labeled components that are essential to the satisfactory performance of the complete assembly. Some labels cover one or more components in addition to the door. *(For specific information, see 4.3.2 and Annex D.)*

A.4.3.9 Testing laboratories might provide a label or certificate of inspection for door assemblies larger than the maximum size indicated in the manufacturer's fire door listing. Door assemblies exceeding these size limitations have not been subjected to the standard fire tests. In certain cases, the testing laboratory might be prepared to furnish a label or certificate of inspection for such oversize door assemblies. This label or certificate does not indicate that the door assemblies are capable of furnishing standard fire protection but only that they conform to the requirements of design, materials, and construction as established by the individual listings.

A.4.4.1 The content of the labeling on individual fire protection–rated (tested to NFPA 252, *Standard Methods of Fire Tests of Door Assemblies*, or NFPA 257, *Standard on Fire Test for Window and Glass Block Assemblies*) and fire resistance–rated (tested to ASTM E119, *Standard Test Methods for Fire Tests of Building Construction and Materials*) glazing should identify the manufacturer, rating, third-party testing agency, test standard, and whether the hose stream test was successfully performed.

A.4.4.3 The door, glazing, and light kit manufacturer's installation instructions should be consulted prior to installation of fire protection glazing after doors have been shipped from the factory.

Doors are allowed to be shipped from the door manufacturer with or without the door glazing or light kit installed in the provided cutout. Installers are currently guided on how to install the glazing and light kits into the opening in the door, through the use of the manufacturer's installation instructions. Each component of the light kits must be used for the installation in order to validate the fire label on the door. Use extra caution in ensuring that the glazing has been installed according to the manufacturer's installation instructions. Strict adherence is a must, if the fire door is to perform as expected.

Copyright 2014 National Fire Protection Association (NFPA). Licensed, by agreement, for individual use and download on October 4, 2014 to LEADER and READER for designated user PATTARAPORN SRITRAKOOL. No other reproduction or transmission in any form permitted without written permission of NFPA. For inquires or to report unauthorized use, contact licensing@nfpa.org.

A.4.4.3.1 The 2010 version of NFPA 80 was modified to require that new wood fire doors have the glazing and light kit installed at the door manufacturer or under that manufacturer's label service. This ensures that all components of the glazed assembly in the new wood door have been properly installed per the manufacturer's follow-up service procedure.

A.4.4.4 A means of determining severity of exterior fire exposures is addressed in NFPA 80A, *Recommended Practice for Protection of Buildings from Exterior Fire Exposures*. NFPA 252, *Standard Methods of Fire Tests of Door Assemblies*, permits the dislodging of small portions of glass lights (glazing material) during the hose stream test. Since the glazing material as used in this exception does not constitute a glass light, no dislodging of the glazing material is permitted.

A.4.4.5 Doors containing fire resistance–rated glazing materials fabricated and tested as door assemblies in accordance with NFPA 252, *Standard Methods of Fire Tests of Door Assemblies*, to determine a fire protection rating should be regulated by this standard as a fire assembly and not as a glazing material permitted in fire door assemblies as prescribed in Section 4.4.

Regarding Table 4.4.5, footnote c, consideration should be given to limiting fire protection glazing size in non–temperature rise doors where 60- and 90-minute fire protection is required due to radiant heat hazards. See Annex I.

A.4.6.3.1 See Figure A.4.6.3.1(a) through Figure A.4.6.3.1(i).

A.4.6.3.3 See Figure A.4.6.3.1(c) and Figure A.4.6.3.1(d).

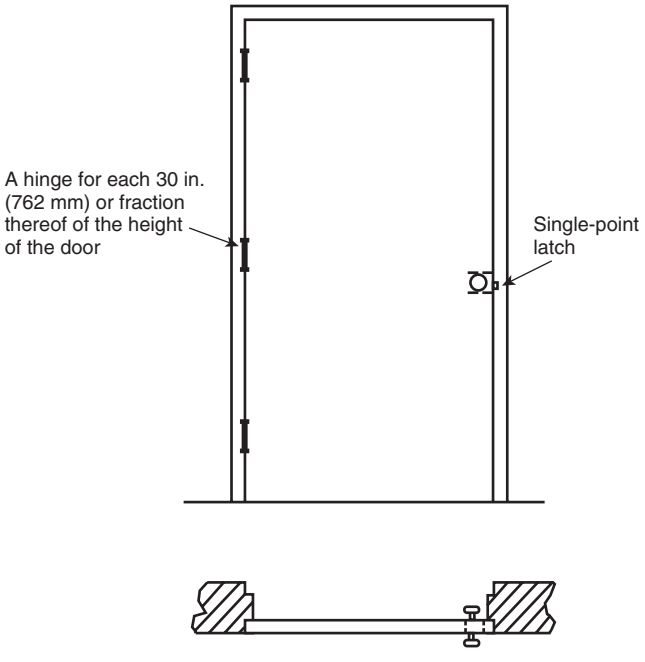

FIGURE A.4.6.3.1(a) Builders Hardware for Single Swinging Door with Single-Point Latch — Flush Mounted.

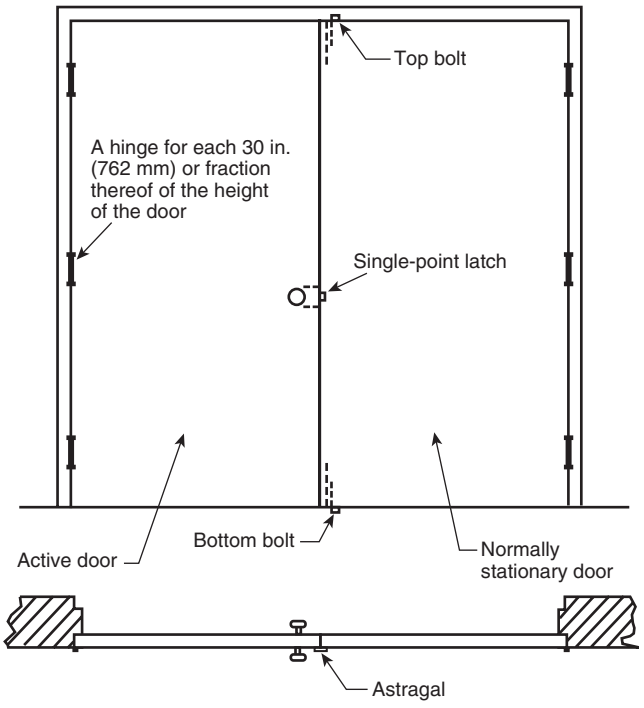

Note: The astragal can be permitted to be attached to the inside of the inactive leaf or the outside of the active leaf.

FIGURE A.4.6.3.1(b) Builders Hardware for Doors Swinging in Pairs with Single-Point Latch — Flush Mounted.

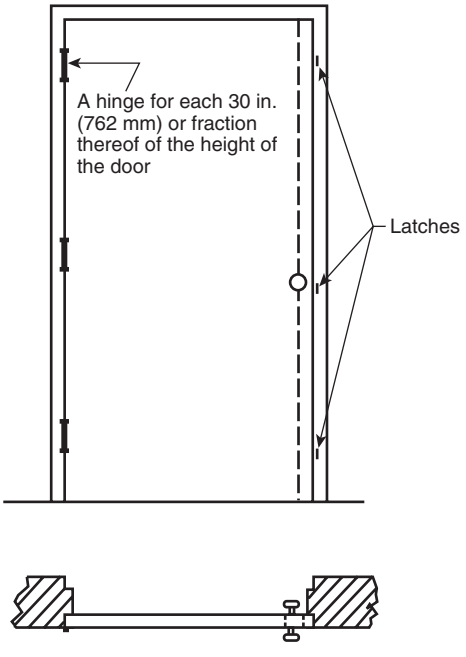

FIGURE A.4.6.3.1(c) Builders Hardware for Single Swinging Door with Concealed Three-Point Latch — Flush Mounted.

Copyright 2014 National Fire Protection Association (NFPA). Licensed, by agreement, for individual use and download on October 4, 2014 to LEADER and READER for designated user PATTARAPORN SRITRAKOOL. No other reproduction or transmission in any form permitted without written permission of NFPA. For inquires or to report unauthorized use, contact licensing@nfpa.org.

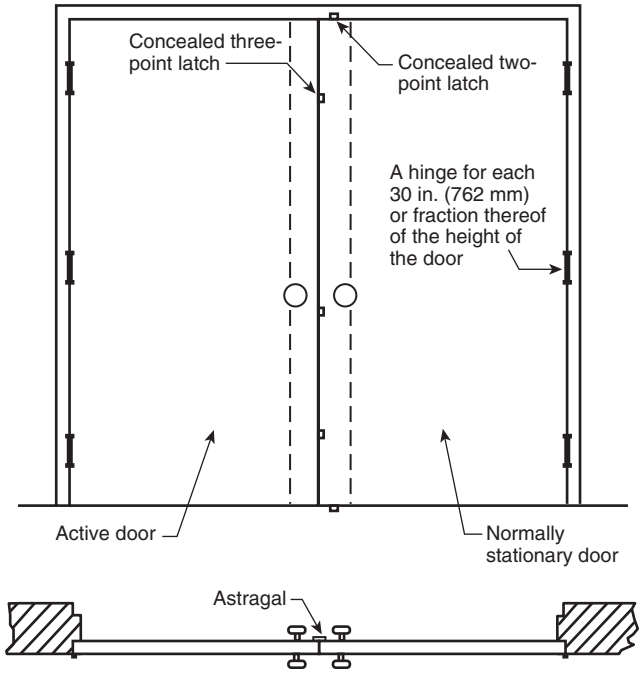

FIGURE A.4.6.3.1(d) Builders Hardware for Doors Swinging in Pairs with Concealed Two- and Three-Point Latches — Flush Mounted.

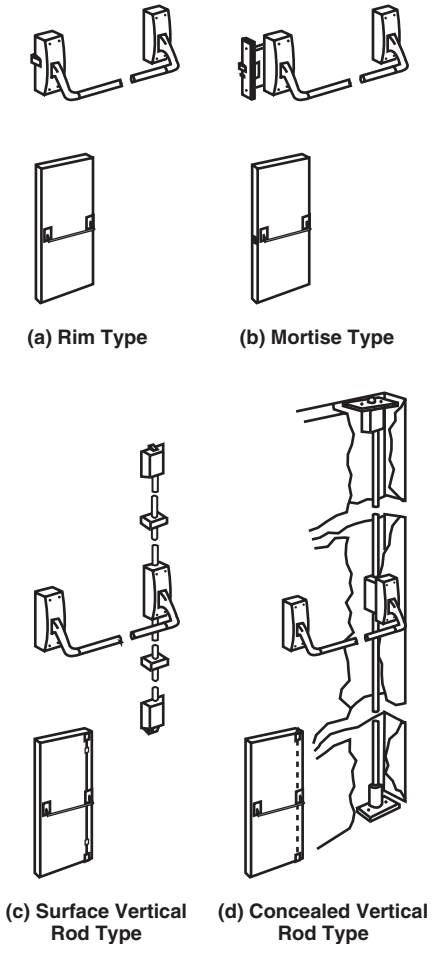

FIGURE A.4.6.3.1(e) Types of Fire Exit Hardware.

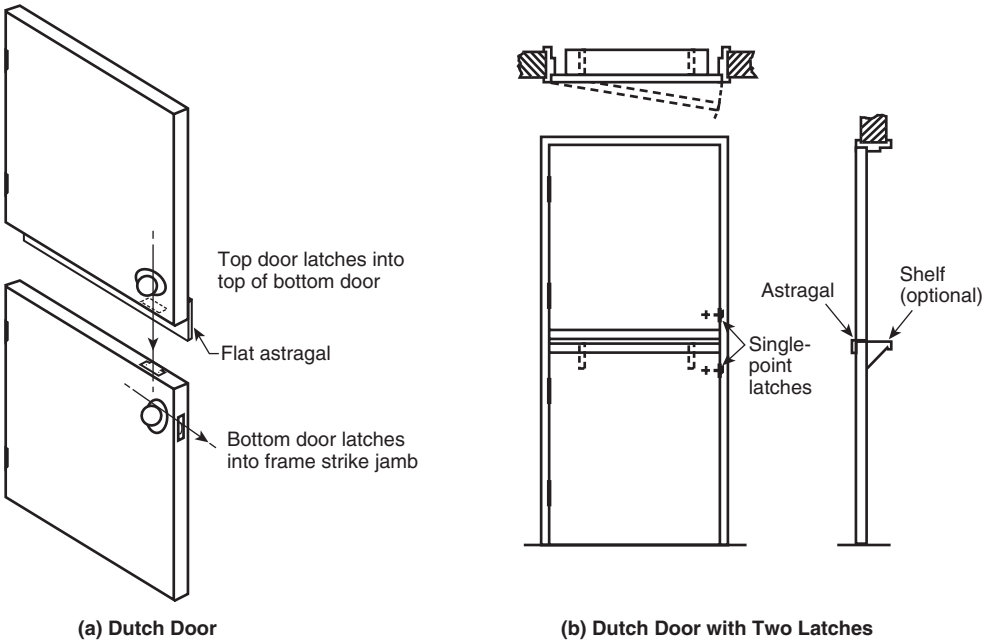

FIGURE A.4.6.3.1(f) Dutch Door and Dutch Door with Two Latches.

Copyright 2014 National Fire Protection Association (NFPA). Licensed, by agreement, for individual use and download on October 4, 2014 to LEADER and READER for designated user PATTARAPORN SRITRAKOOL. No other reproduction or transmission in any form permitted without written permission of NFPA. For inquires or to report unauthorized use, contact licensing@nfpa.org.

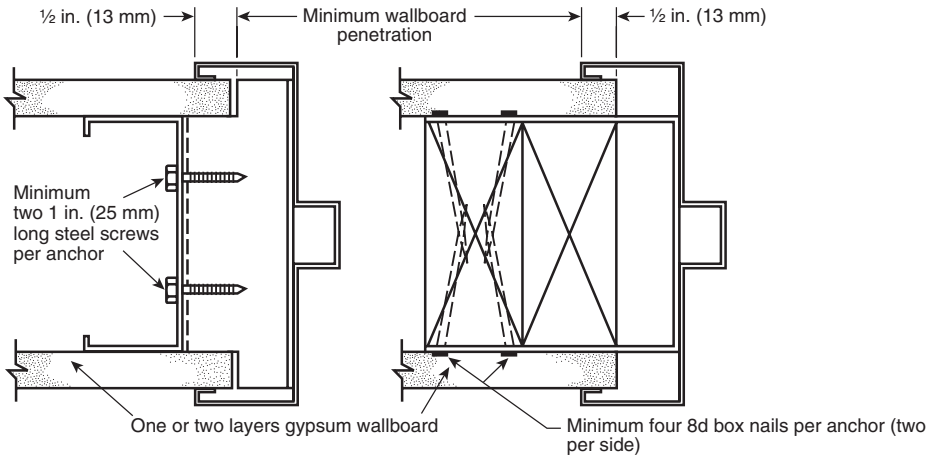

(a) Pressed Steel Door Frame with Steel Stud Anchors

(b) Pressed Steel Door Frame with Wood Stud Anchors

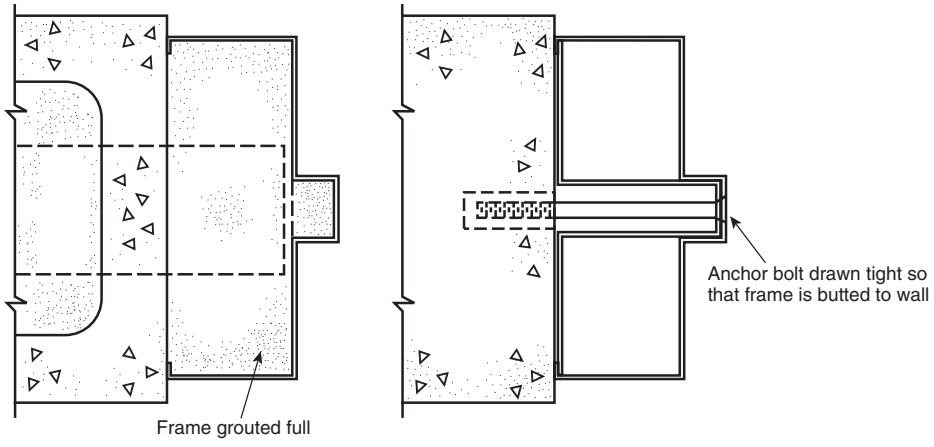

(c) Pressed Steel Door Frame with Masonry Anchors

(d) Pressed Steel Door Frame with Expansion Shell Anchors

FIGURE A.4.6.3.1(g) Typical Pressed Steel Door Frame Installations.

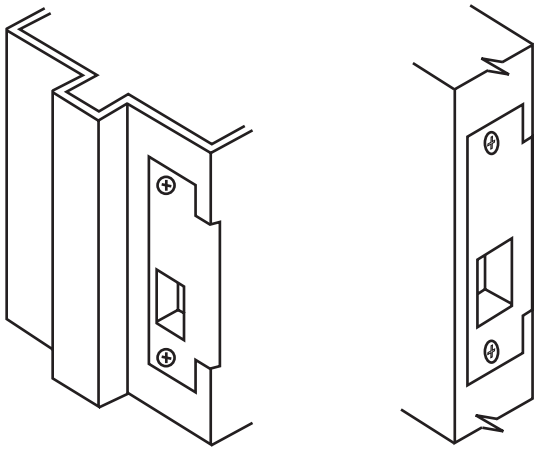

(a) Latch Strike for Single Door Installed in Jamb

(b) Latch Strike for Pair of Doors Installed in Edge of Inactive Leaf

FIGURE A.4.6.3.1(h) Typical Latch Strike for Single Door and for Pair of Doors.

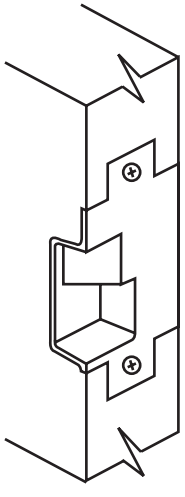

FIGURE A.4.6.3.1(i) Typical "Open-Back" Latch Strike for Pair of Doors Installed in Edge of Inactive Leaf Where Permitted by Individual Published Listings.

Copyright 2014 National Fire Protection Association (NFPA). Licensed, by agreement, for individual use and download on October 4, 2014 to LEADER and READER for designated user PATTARAPORN SRITRAKOOL. No other reproduction or transmission in any form permitted without written permission of NFPA. For inquires or to report unauthorized use, contact licensing@nfpa.org.

A.4.6.4 See Figure A.4.6.4(a) through Figure A.4.6.4(h).

A.4.7.5 The arrangements shown in Figure A.4.7.5(a) through Figure A.4.7.5(l), Figure A.4.6.4(b) through Figure A.4.6.4(e), and Figure A.4.6.4(h) are recommended to provide the performance intended. Other arrangements acceptable to the AHJ could be permitted to be used.

A.4.7.5.1 Wall sleeves required for the installation of fire door fusible links on both sides of a wall are unlike many other wall penetrations for pipes, conduits, ducts, and the like. Such sleeves must remain open and unobstructed for free movement of the fusible link cable/chain upon fusing of the links. Firestopping, other sealants, or other materials should not be used on sleeves because they can encumber movement and prevent automatic closing of a fire door in a fire event.

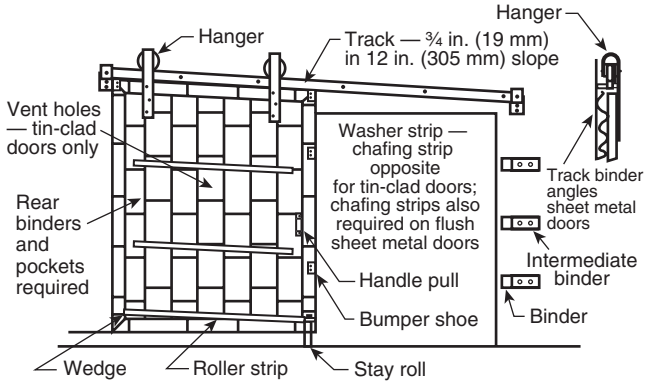

FIGURE A.4.6.4(a) Single Sliding Door (Inclined Track).

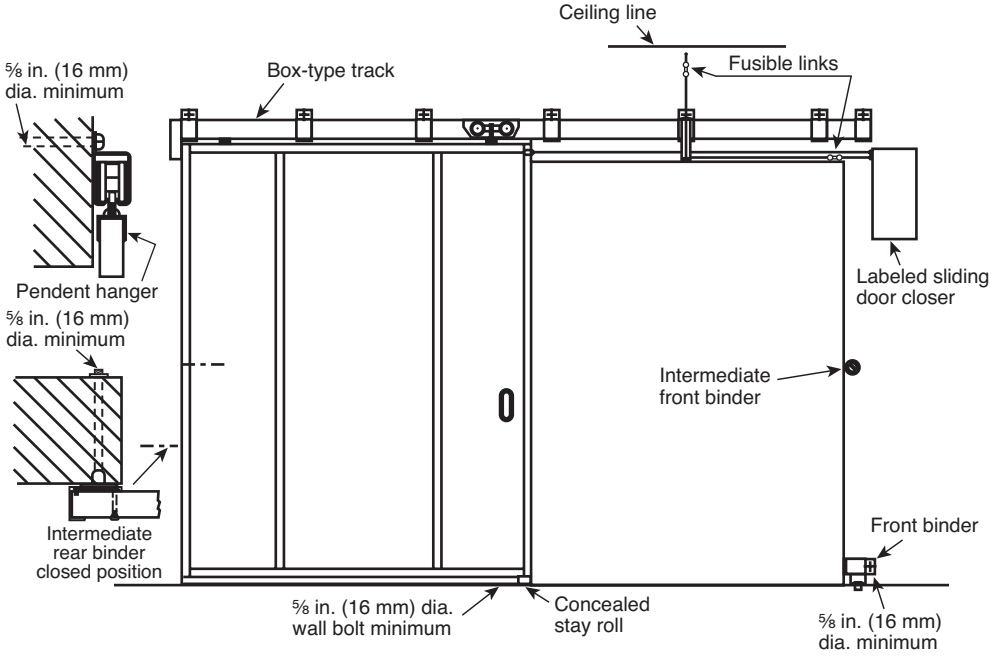

Note: Fusible links are needed on both sides of the wall.

FIGURE A.4.6.4(b) Horizontally Sliding Composite Door.

It is important that cables, chains, or any components of the fusible link assembly do not hang up on eye bolts or pulleys, through-wall sleeve, any part of the building structure, or any component of the fire door assembly. It is also important that components not be coated or affixed with foreign material which could obstruct free operation of the release system. Examples of foreign material might include fireproofing, firestopping, paint, or spray texturing.

A.4.8.1.3 See Figure A.4.8.1.3(a) through Figure A.4.8.1.3(c).

Figure A.4.8.1.3(a) illustrates typical reinforcement of a hollow concrete masonry wall opening to provide adequate anchorage of the door-mounting hardware. Brick reinforcement can be permitted to be omitted, provided all hollow cells within 16 in. (406 mm) of the opening are filled with concrete. It is recommended where openings are subjected to heavy traffic that jambs be protected with steel frames extending the full thickness of the wall.

Figure A.4.8.1.3(b) illustrates typical brick reinforcement of a hollow concrete masonry wall opening to provide adequate anchorage of the door-mounting hardware. Brick reinforcement can be omitted, provided all hollow cells within 16 in. (406 mm) of the opening on each side and all cells where track is mounted are filled with concrete. It is recommended where openings are subjected to heavy traffic that jambs be protected with steel frames extending the full thickness of the wall.

Figure A.4.8.1.3(c) illustrates typical reinforcement for anchorage of door-mounting hardware by use of steel plates to bridge the cavities in the hollow concrete masonry units and to prevent their crushing.

Copyright 2014 National Fire Protection Association (NFPA). Licensed, by agreement, for individual use and download on October 4, 2014 to LEADER and READER for designated user PATTARAPORN SRITRAKOOL. No other reproduction or transmission in any form permitted without written permission of NFPA. For inquires or to report unauthorized use, contact licensing@nfpa.org.

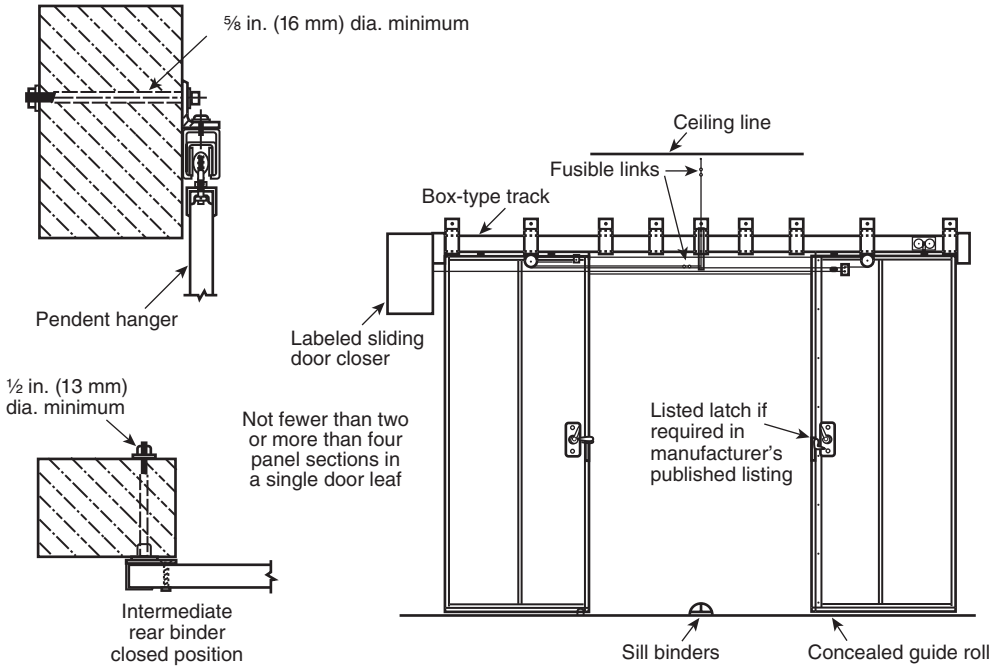

Note: Fusible links are needed on both sides of the wall.

FIGURE A.4.6.4(c) Center-Parting, Horizontally Sliding Composite Door.

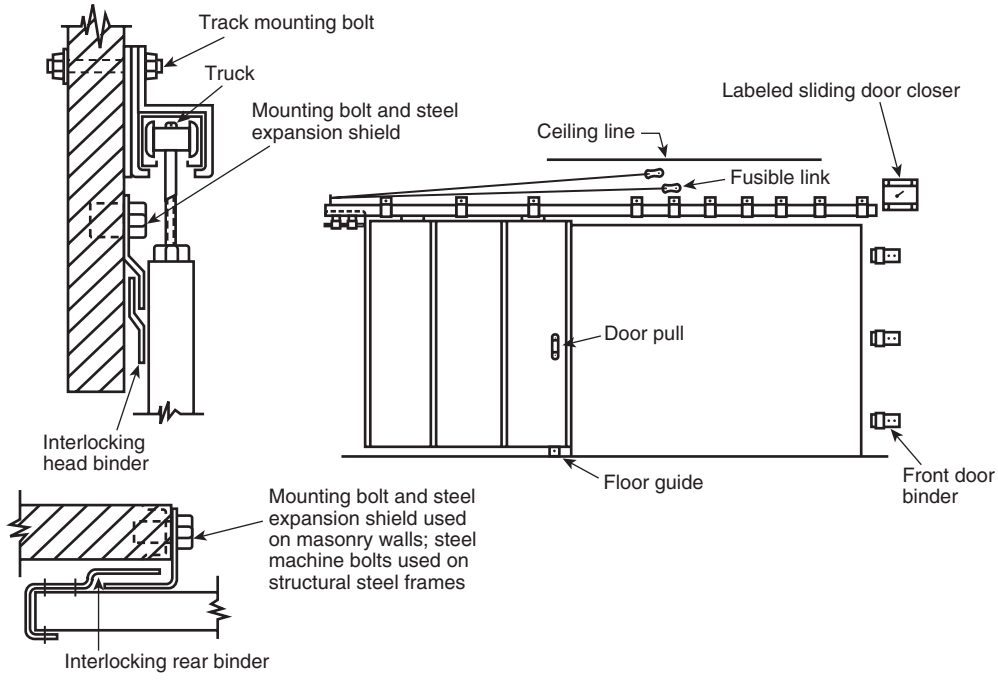

Note: Fusible links are needed on both sides of the wall.

FIGURE A.4.6.4(d) Horizontally Sliding Hollow Metal Door.

Copyright 2014 National Fire Protection Association (NFPA). Licensed, by agreement, for individual use and download on October 4, 2014 to LEADER and READER for designated user PATTARAPORN SRITRAKOOL. No other reproduction or transmission in any form permitted without written permission of NFPA. For inquires or to report unauthorized use, contact licensing@nfpa.org.

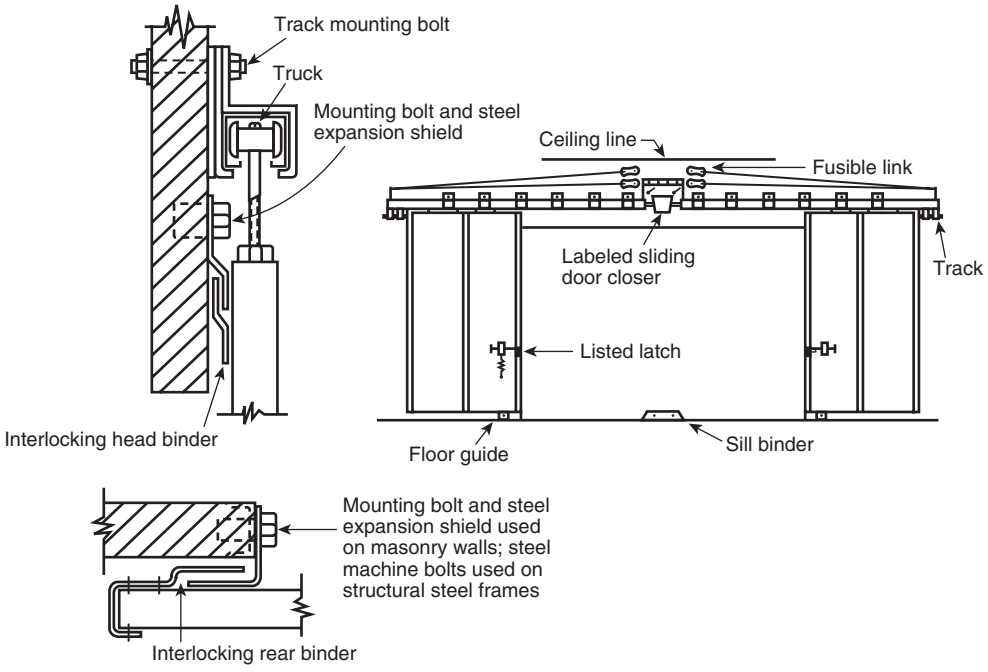

FIGURE A.4.6.4(e) Center-Parting, Horizontally Sliding Hollow Metal Door.

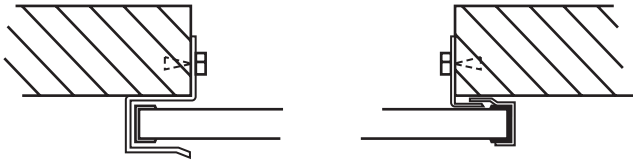

FIGURE A.4.6.4(f) Binder Arrangements.

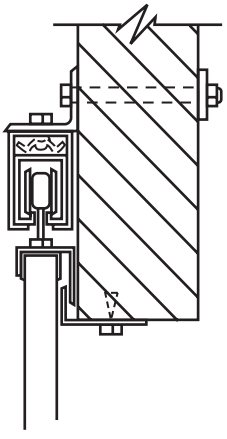

FIGURE A.4.6.4(g) Binder Arrangement on Pendent Hanger.

Copyright 2014 National Fire Protection Association (NFPA). Licensed, by agreement, for individual use and download on October 4, 2014 to LEADER and READER for designated user PATTARAPORN SRITRAKOOL. No other reproduction or transmission in any form permitted without written permission of NFPA. For inquires or to report unauthorized use, contact licensing@nfpa.org.

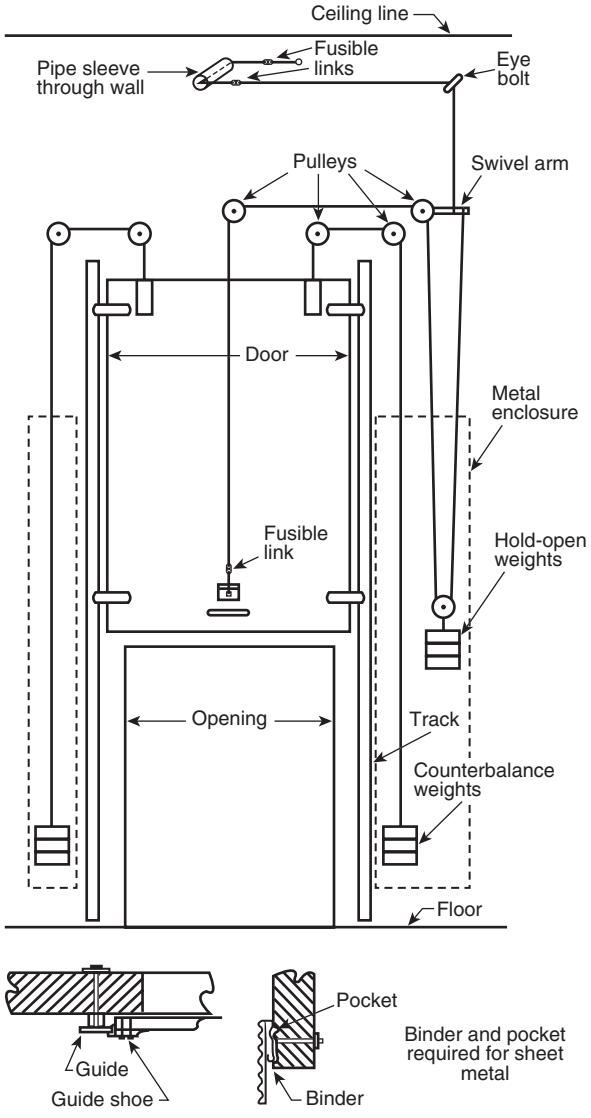

Note: Fusible links are needed on both sides of the wall.

FIGURE A.4.6.4(h) Vertically Sliding Door.

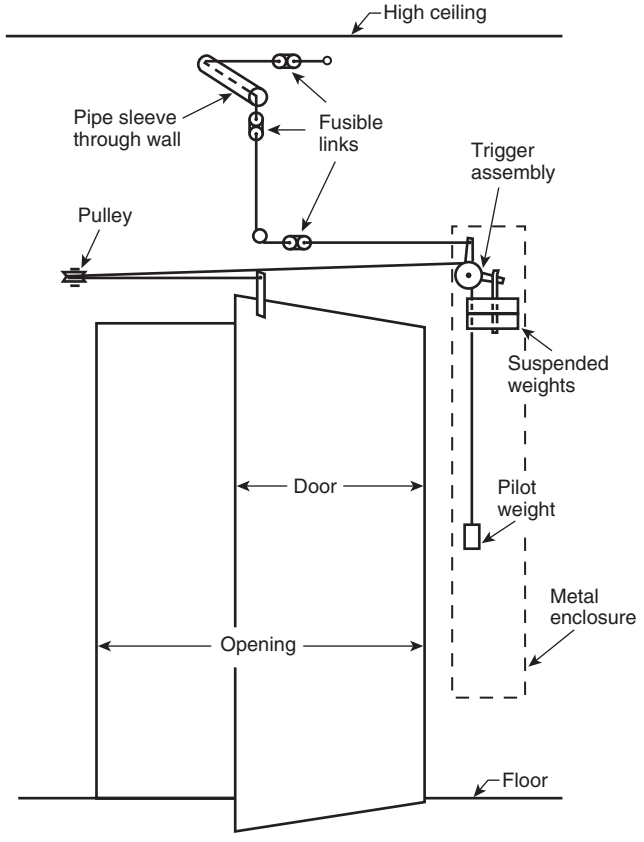

Note: Fusible links are needed on both sides of the wall.

FIGURE A.4.7.5(a) Closing Devices for Single Swinging Door.

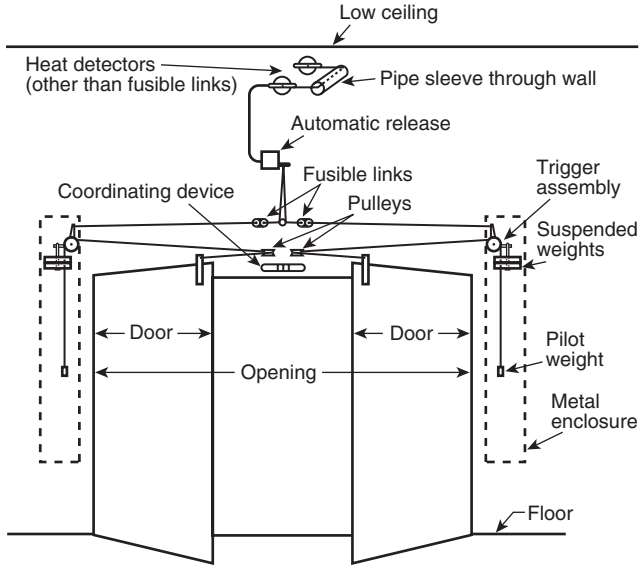

Note: See appropriate section for the required hardware for the normally stationary door.

FIGURE A.4.7.5(b) Closing Devices for Doors Swinging in Pairs.

Copyright 2014 National Fire Protection Association (NFPA). Licensed, by agreement, for individual use and download on October 4, 2014 to LEADER and READER for designated user PATTARAPORN SRITRAKOOL. No other reproduction or transmission in any form permitted without written permission of NFPA. For inquires or to report unauthorized use, contact licensing@nfpa.org.

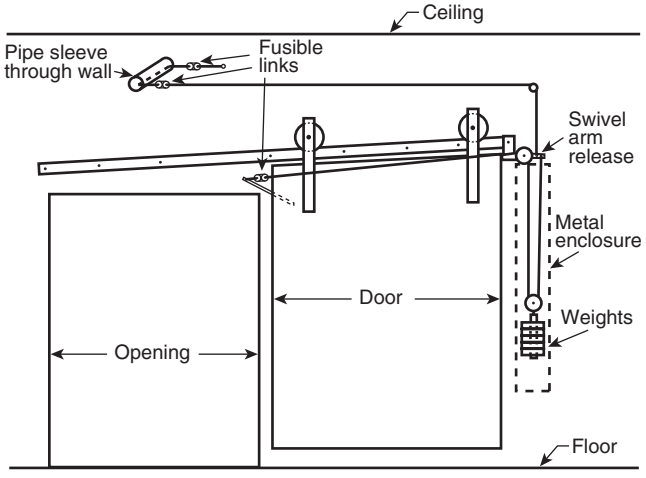

Note: Fusible links are needed on both sides of the wall.

FIGURE A.4.7.5(c) Closing Devices for Single Sliding Door (Inclined Track).

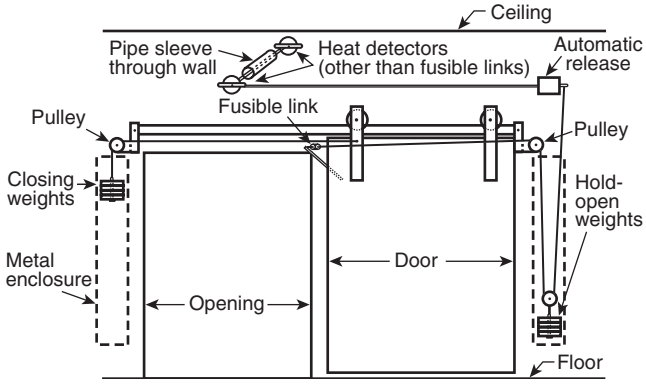

FIGURE A.4.7.5(d) Closing Devices for Single Sliding Door, Example 1 (Level Track).

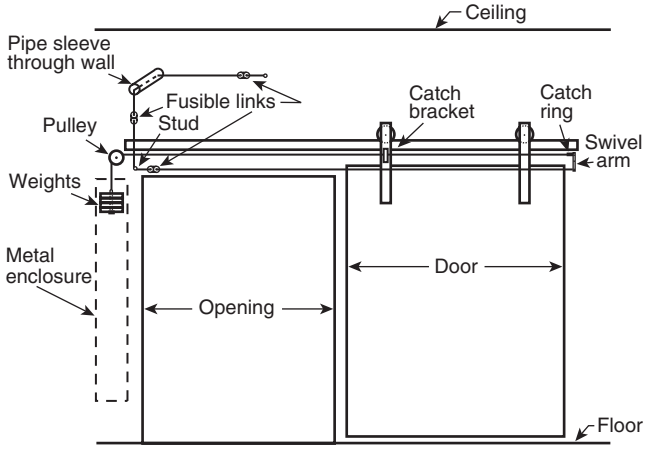

FIGURE A.4.7.5(e) Closing Devices for Single Sliding Door, Example 2 (Level Track).

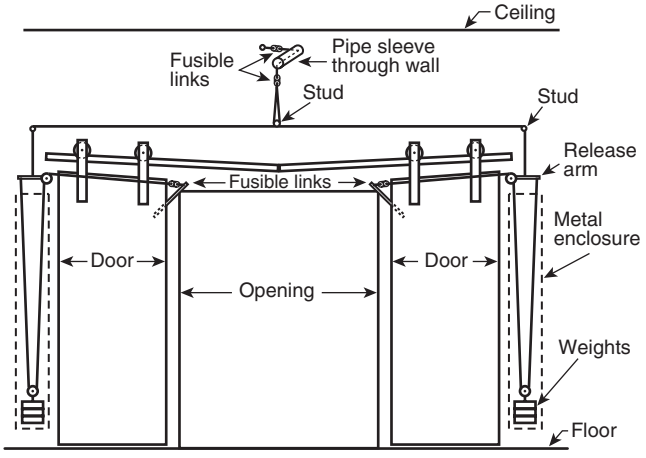

Note: Fusible links are needed on both sides of the wall.

FIGURE A.4.7.5(f) Closing Devices for Center-Parting, Horizontally Sliding Doors (Inclined Track).

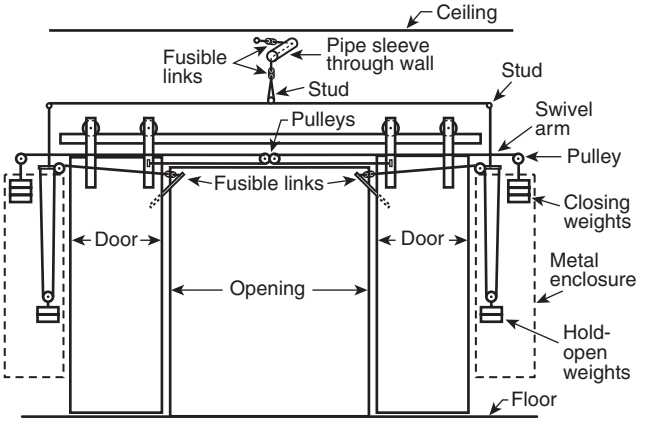

FIGURE A.4.7.5(g) Closing Devices for Center-Parting, Horizontally Sliding Doors, Example 1 (Level Track).

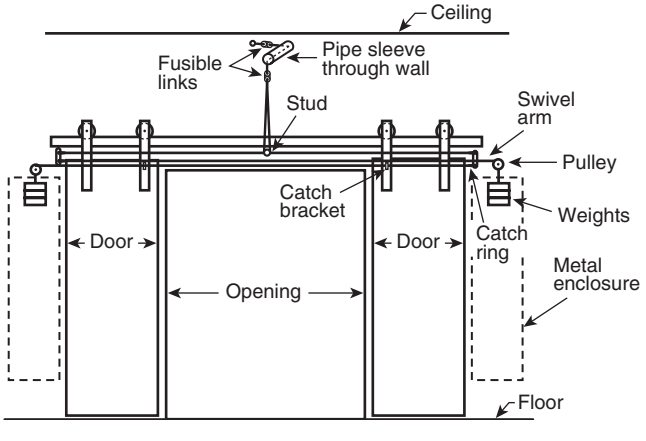

FIGURE A.4.7.5(h) Closing Devices for Center-Parting, Horizontally Sliding Doors, Example 2 (Level Track).

Copyright 2014 National Fire Protection Association (NFPA). Licensed, by agreement, for individual use and download on October 4, 2014 to LEADER and READER for designated user PATTARAPORN SRITRAKOOL. No other reproduction or transmission in any form permitted without written permission of NFPA. For inquires or to report unauthorized use, contact licensing@nfpa.org.

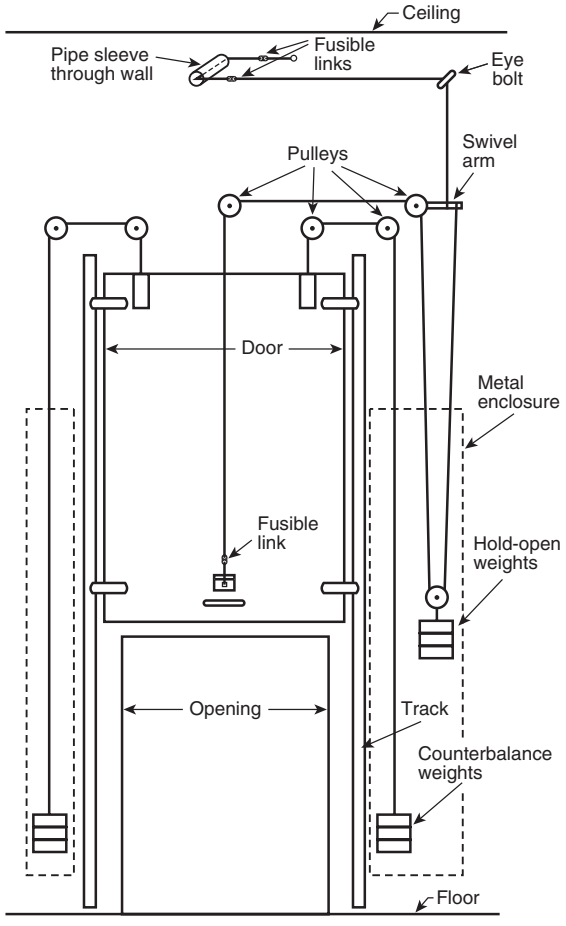

Note: Fusible links are needed on both sides of the wall.

FIGURE A.4.7.5(i) Closing Devices for Vertically Sliding Door.

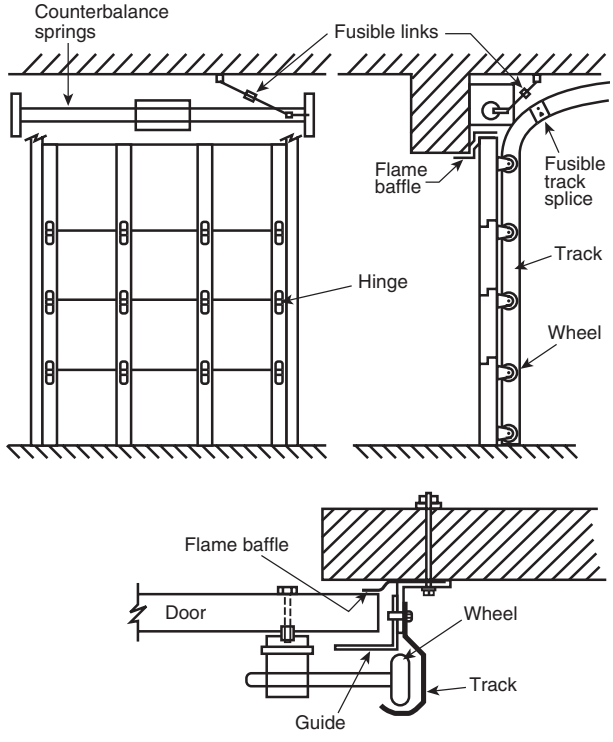

Note: Fusible links are needed on both sides of the wall.

FIGURE A.4.7.5(j) Vertically Sliding, Steel-Sectional Overhead Door.

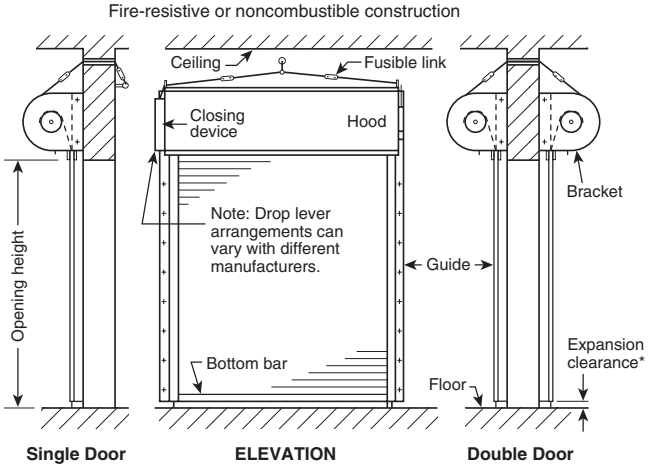

* Expansion clearance per door listing. Doors with downward expansion are as shown. Doors with upward expansion require expansion clearance above the top of the door.

Note: Fusible links are needed on both sides of the wall — configuration could vary.

FIGURE A.4.7.5(k) Rolling Steel Doors — Surface Mounted.

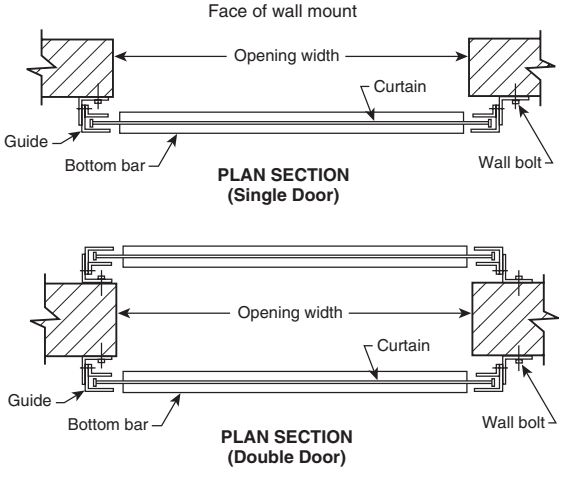

Wall bolt for masonry construction:
Through-bolt, or expansion anchor, as permitted by door listing.

Wall bolt for nonmasonry wall construction:
Through-bolt, or machine screw into steel jamb, or lag screw into wood jamb, as permitted by door listing.

Copyright 2014 National Fire Protection Association (NFPA). Licensed, by agreement, for individual use and download on October 4, 2014 to LEADER and READER for designated user PATTARAPORN SRITRAKOOL. No other reproduction or transmission in any form permitted without written permission of NFPA. For inquires or to report unauthorized use, contact licensing@nfpa.org.

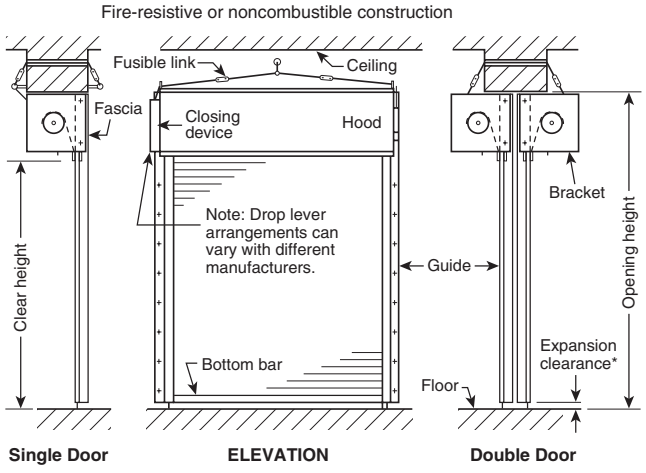

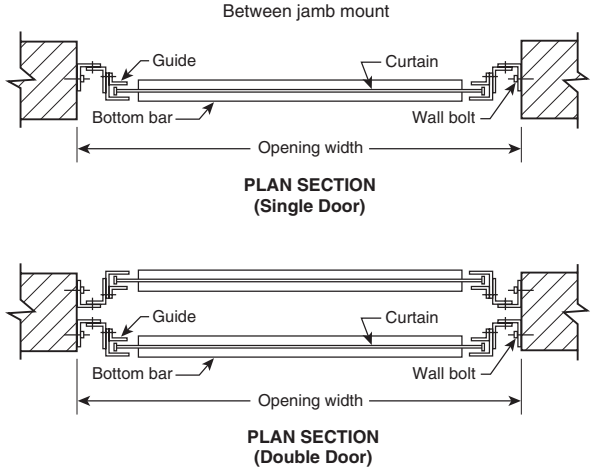

* Expansion clearance per door listing. Doors with downward expansion are as shown. Doors with upward expansion require expansion clearance above the top of the door.

Note: Fusible links are needed on both sides of the wall — configuration could vary.

Wall bolt for masonry construction:
Through-bolt, or expansion anchor, as permitted by door listing.

Wall bolt for nonmasonry wall construction:
Through-bolt, or machine screw into steel jamb, or lag screw into wood jamb, as permitted by door listing.

FIGURE A.4.7.5(l) Rolling Steel Doors — Mounted Between Jambs.

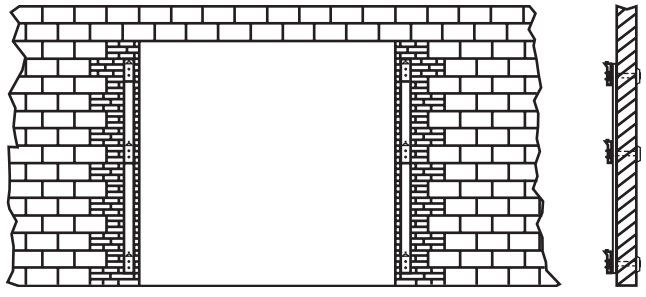

FIGURE A.4.8.1.3(a) Hollow Concrete Masonry Wall Prepared for Doors Swinging in Pairs — Lap Mounted, Standard Method.

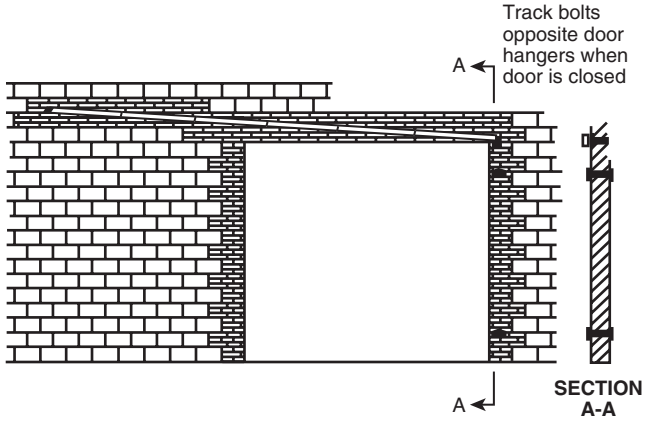

FIGURE A.4.8.1.3(b) Hollow Concrete Masonry Wall Prepared for Single Tin-Clad or Sheet Metal Sliding Door — Standard Method.

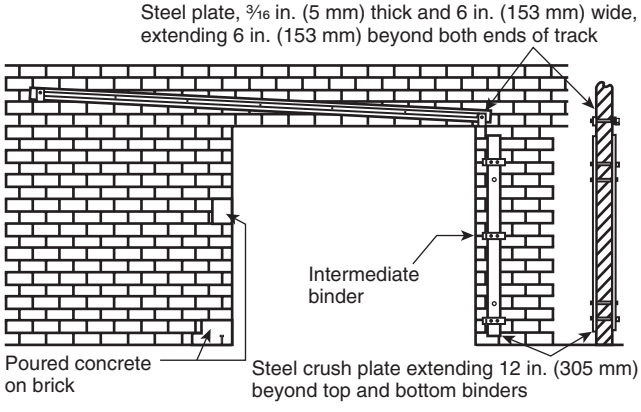

Note: Steel plates installed on both sides of wall with ½ in. (13 mm) through-bolts; binders, track, and stay rolls secured with ¾ in. (19 mm) through-bolts

FIGURE A.4.8.1.3(c) Hollow Concrete Masonry Wall Prepared for a Single Sliding Door.

A.4.8.1.4 Figure A.4.8.1.4 illustrates typical reinforcement for anchorage of door-mounting hardware by use of steel plates to bridge cavities in the hollow concrete masonry units and to prevent their crushing. It is recommended where openings are subjected to heavy traffic that jambs be protected with steel frames extending the full thickness of the wall. See also Figure A.4.8.1.3(b) and Figure A.4.8.1.3(c).

A.4.8.2.5 The jamb is the vertical component or member of an opening whether framed or not.

A.4.8.2.6 See Figure A.4.8.2.6.

A.4.8.2.8 See Figure A.4.8.2.8(a) through Figure A.4.8.2.8(c).

Copyright 2014 National Fire Protection Association (NFPA). Licensed, by agreement, for individual use and download on October 4, 2014 to LEADER and READER for designated user PATTARAPORN SRITRAKOOL. No other reproduction or transmission in any form permitted without written permission of NFPA. For inquires or to report unauthorized use, contact licensing@nfpa.org.

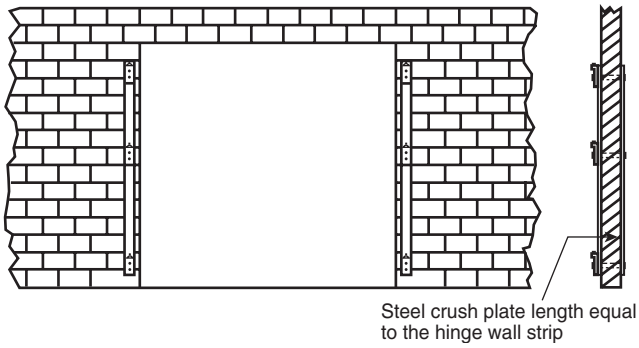

FIGURE A.4.8.1.4 Hollow Concrete Masonry Wall Prepared for Doors Swinging in Pairs — Lap Mounted.

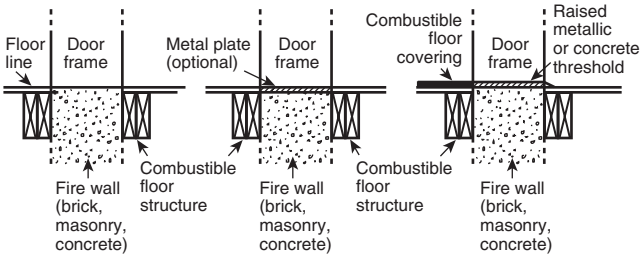

FIGURE A.4.8.2.6 Noncombustible Sill Used with Combustible Floors for Doors Swinging into Steel Frame.

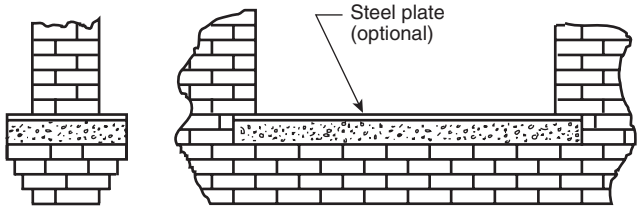

FIGURE A.4.8.2.8(a) Concrete Sill Supported by a Corbel of Brick Used with Combustible Floors.

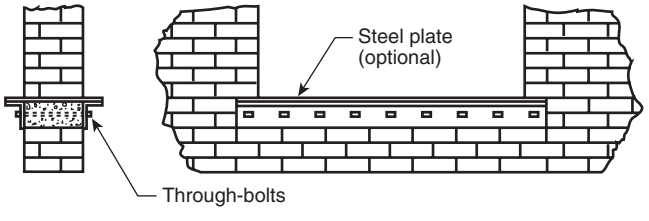

FIGURE A.4.8.2.8(b) Angle Iron and Concrete Sill Used with Combustible Floors.

A.4.8.2.9 See Figure A.4.8.2.8(a) through Figure A.4.8.2.8(c).

A.4.8.2.13 See Figure A.4.8.2.6.

A.4.8.4.1 The maximum clearance of ¾ in. (19 mm.) under fire doors as permitted by this standard is the accepted practice in the industry. NFPA 252, *Standard Methods of Fire Tests of Door Assemblies*, is a test standard, not an installation standard, and prescribes clearances and tolerances for swinging doors installed in the test wall opening. The test procedures as specified in NFPA 252 represent a worst-case condition for the fire test.

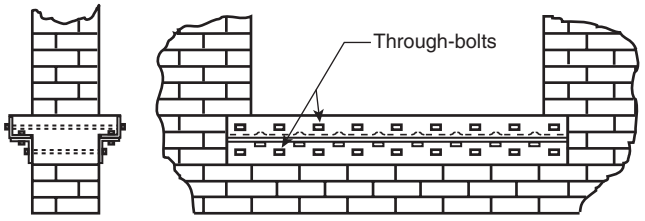

FIGURE A.4.8.2.8(c) Z-Bar and Concrete Sill Used with Combustible Floors.

A.4.8.6 See Figure A.4.8.6(a) and Figure A.4.8.6(b).

A.5.1 Fire doors, fire shutters, and fire windows are designed to protect the opening under normal conditions of use, with clear spaces on both sides of the opening. Typically, fire doors, fire shutters, and fire windows will provide a lesser rating than the wall and generally allow heat transmission through the assembly. Combustible materials should not be piled against or near the door, window, or shutter.

A.5.1.1.1 See Chapter 19 for fire dampers and Chapter 20 for fabric fire safety curtains.

A.5.1.4.1 Field modifications beyond the scope of the prescriptive allowances permitted by 4.1.3.2 through 4.1.3.4 typically result in voiding the fire rating of the assembly. Paragraph 5.1.4.1 provides an alternative method whereby proposed modifications can be documented and presented to the labeling agency prior to work commencing. Where the proposed modification(s) are within the parameters of the manufacturer's procedures and will not degrade the fire resistance of the assembly, the labeling agency is permitted to authorize such modifications without a requirement for a subsequent field inspection.

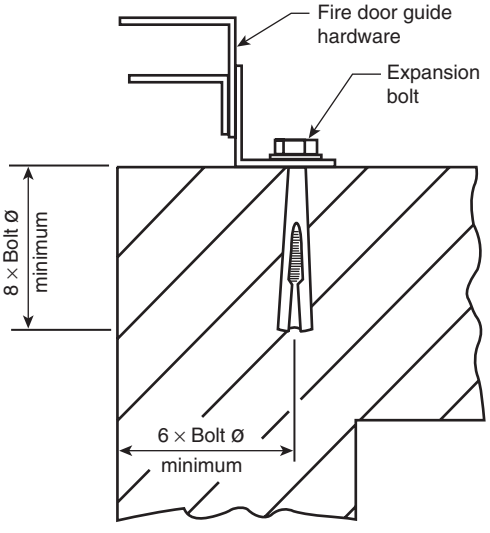

FIGURE A.4.8.6(a) Corner Walls.

Copyright 2014 National Fire Protection Association (NFPA). Licensed, by agreement, for individual use and download on October 4, 2014 to LEADER and READER for designated user PATTARAPORN SRITRAKOOL. No other reproduction or transmission in any form permitted without written permission of NFPA. For inquires or to report unauthorized use, contact licensing@nfpa.org.

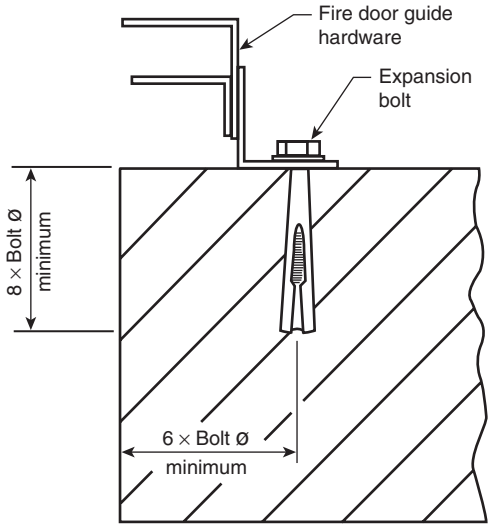

FIGURE A.4.8.6(b) Unusually Thick Walls.

A.5.2 Doors, shutters, and windows are of no value unless they are properly maintained and closed or are able to close at the time of fire. A periodic inspection and maintenance program is generally the responsibility of the building owner.

A.5.2.1 Hinges, catches, closers, latches, and stay rollers are especially subject to wear.

A.5.2.2 Newer technology includes use of barcodes and other electronic devices. This section recognizes that completed and filed barcode reports should be considered signed by the inspector.

A.5.2.2.2 In many cases, AHJs are not able to inspect each building in their jurisdiction each year. Inspection and testing records need to be retained during the intervening periods between the AHJ's formal visits to provide evidence that the inspections and testing were performed as required by this standard. Additionally, maintenance records documenting that the necessary corrective actions have been made in accordance with this standard should be stored with the inspection and testing records for the same period of time. Retaining the records for 7 years allows the AHJ the ability to look back over an extended period of time to verify that the fire door assemblies are being properly maintained.

A.5.2.2.3 Installation of new fire door assemblies should be documented in the same manner and level of detail as the periodic inspections and testing of fire door assemblies required by 5.2.3 and 5.2.4. Records of new fire door assemblies should be retained with the periodic inspections and testing records for the facility.

A.5.2.2.4(8) Each fire door assembly inspected and tested should be assigned a unique identifier code (e.g., door number as assigned by the facility) that can be used to track the assembly's compliance and maintenance records throughout the lifetime of its installation. Identifier codes could be a door assembly number, barcode, or other code that is unique to each fire door assembly.

A.5.2.2.4(9) To aid the AHJ during the review of the inspections and testing reports, the records should include a description of the type of fire door assembly as follows:

Type 6: Swinging door with builders hardware
Type 7: Swinging fire door with fire door hardware
Type 8: Horizontally sliding fire door
Type 9: Special purpose horizontally accordion or folding door
Type 10: Vertically sliding fire door
Type 11: Rolling steel door
Type 12: Fire shutter
Type 13: Service counter fire door
Type 14: Hoistway doors for elevators and dumbwaiter
Type 15: Chute door
Type 16: Access door
Type 17: Fire window

A.5.2.2.4(10) Functional operation of fire door assemblies should include testing of the closing device, complete closure of the fire door, and full engagement of latch(es) where required by door type. Functional testing of automatic-closing or power-operated fire door assemblies and electrically controlled latching hardware or release devices might need to be coordinated with the facility during other electrically controlled system tests.

A.5.2.2.5 Existing fire door assemblies that have been repaired should be inspected and tested immediately upon completion of the repair work to ensure that they are in compliance with this standard.

A.5.2.3.1 Visual inspection and functional testing of fire door and fire window assemblies require the persons performing the inspections and testing to be thoroughly knowledgeable of the various components and systems that are used to create fire-rated assemblies. In the case of swinging doors with builders hardware, these assemblies are comprised of labeled and listed components from several manufacturers. Often, the listing of the door leaf determines which products are permitted to be installed on an assembly. Inspectors of swinging doors with builders hardware need be able to recognize which components can or cannot be used on specific assemblies, which requires training and experience on behalf of the persons performing the inspections. Additionally, AHJs need to be able to rely on the competency, expertise, experience, and knowledge of the fire door inspectors in their jurisdiction.

A.5.2.3.2 Any fire door or fire window assembly or component that has a history of reoccurring failures should be evaluated for possible replacement or other corrective measures.

A.5.2.3.6.2(12) Fusible links should not be coated with any materials such as fireproofing, drywall compound, or spray texturing.

A.5.2.3.8 Movable parts of the door assembly can include, but are not limited to, stay rollers, gears, and closing mechanisms.

A.5.2.4.1 Doors subject to high-volume use and abuse might warrant an increased frequency of inspection. Components including, but not limited to, hinges, catches, closers, latches, and stay rollers are especially subject to wear.

A.5.2.4.6 The determination of the time required for corrective action should be based on a risk analysis and availability of replacement materials.

A.5.4 See Annex J for information regarding performance-based inspection, testing, and maintenance options for fire door assemblies.

Copyright 2014 National Fire Protection Association (NFPA). Licensed, by agreement, for individual use and download on October 4, 2014 to LEADER and READER for designated user PATTARAPORN SRITRAKOOL. No other reproduction or transmission in any form permitted without written permission of NFPA. For inquires or to report unauthorized use, contact licensing@nfpa.org.

A.5.5.1 The determination of the time required for corrective action should be based on a risk analysis and availability of replacement materials.

A.6.3.1.1 Door frames might carry a label stating the hourly rating. The rating of the installed assembly should carry the rating of the door or the door frame, whichever is less.

A.6.3.1.2 Door frames should be installed following the general guidelines shown in Figure A.4.6.3.1(g). The door frame installations shown in Figure A.4.6.3.1(g) do not represent all types of installations but do illustrate some typical door frame installation techniques required for the proper installation of fire door frames.

A.6.3.1.3 See Figure A.6.3.1.3(a) and Figure A.6.3.1.3(b) for examples of how door frames can be secured in drywall applications.

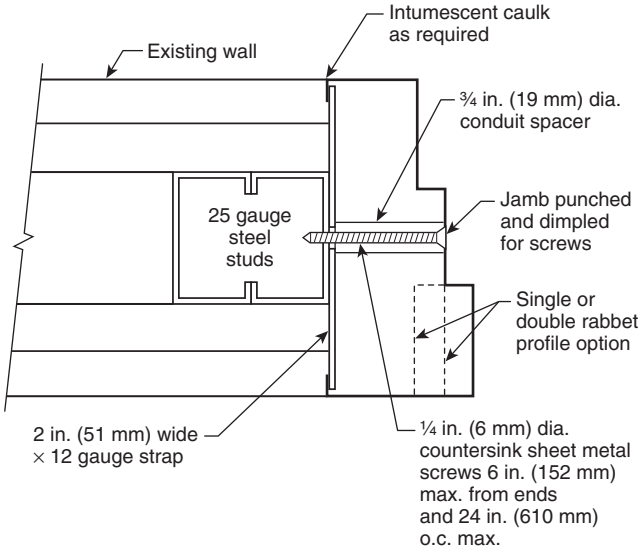

FIGURE A.6.3.1.3(a) Single or Pair Swing or Double Egress Door Frames Butted to Existing Dry Wall Anchor System.

A.6.3.1.4 Examples of proprietary-type slip-on door frames are those for use on prepared openings in drywall construction.

A.6.3.1.7 See Figure A.6.3.1.7 for more information regarding clearances and the pull face of the door.

A.6.4.1.1 It is the intent of the standard that most fire doors will have a closing device. However, in limited circumstances the closer might not be necessary because the door leaf is inactive and is normally in the closed position. Examples of such applications include pairs of doors to mechanical equipment rooms and certain industrial areas where an inactive leaf is provided and is infrequently used to permit large equipment to be moved through the door opening. In such instances, the AHJ should be reasonably assured that the inactive leaf normally will be closed and latched. Another example where the AHJ can omit the requirement for a closer involves communicating doors between hotel/motel sleeping rooms. In this instance, when the communicating rooms are occupied by separate parties, the communicating doors are part of the guest room separation and normally would be closed. However, if the suite of rooms is occupied by a single party, the communicating doors are no longer part of the guest room separation because the suite of rooms would be considered a single guest room.

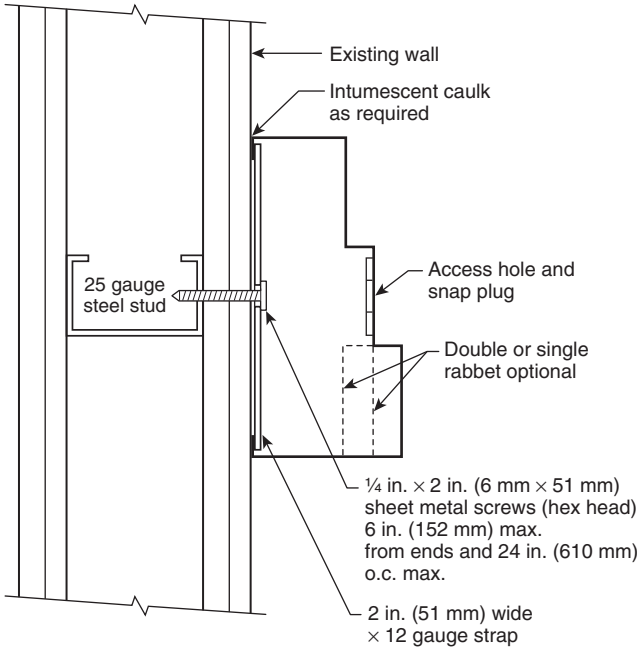

FIGURE A.6.3.1.3(b) Single or Pair Swing or Double Egress Door Frames Across Corridor Butted to Existing Dry Wall Anchor System with 1½-Hour Positive Pressure.

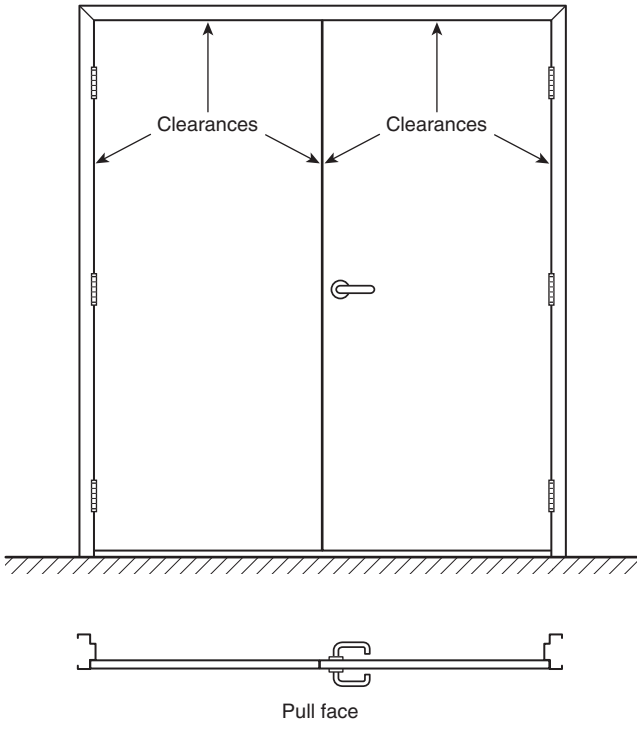

FIGURE A.6.3.1.7 Pull Face of a Swinging Pair of Doors.

Copyright 2014 National Fire Protection Association (NFPA). Licensed, by agreement, for individual use and download on October 4, 2014 to LEADER and READER for designated user PATTARAPORN SRITRAKOOL. No other reproduction or transmission in any form permitted without written permission of NFPA. For inquires or to report unauthorized use, contact licensing@nfpa.org.

A.6.4.1.4 Adequate spring power is essential for hydraulic door closers to close a fire door with sufficient force to overcome the resistance of the latching mechanism. However, too much spring power causes opening resistance and makes it difficult for the handicapped, the infirm, and young children to open doors.

Closers are classified in sizes from 2 to 6, with an increased closing force for higher numbers. Generally, a size 4 minimum closer should be used on exterior fire doors and a size 3 minimum closer should be used on interior fire doors. Door widths greater than 3⅙ ft (0.97 m) exterior and 3⅓ ft (1.02 m) interior, parallel or single lever arm applications, and abnormal air pressures usually require an increase to the next size. A combination of these factors could necessitate an increase of two sizes. Individual manufacturer recommendations should be consulted.

Spring hinges should be adjusted to achieve positive latching when allowed to close freely from an open position of 30 degrees.

A.6.4.2 Labeled door holder/release devices for swinging doors should, wherever possible, be installed at the top of the door as close as possible to the lock edge and should be located to avoid interference with any other hardware. If necessary, the holder/release can be permitted to be located at the bottom of the door as close as possible to the lock edge, with the device installed on the wall or floor.

A.6.4.3 Individual listed or labeled hardware products are usually suitable for fire door assemblies of any construction or hourly rating. There are, however, some exceptions because of limitations found either in individual door or frame construction or in the hardware products.

Some latches, for example, are listed for use only in ⅓-hour assemblies. Another example is that some pairs of doors might be equipped only with latches having a latch throw of ¾ in. (19 mm), while those produced by a different manufacturer might have been tested with latches having a latch throw of ½ in. (12.7 mm).

Other products such as concealed door closers, electric strikes, open back strikes, viewers, or spring hinges are limited in use either by door and frame construction, size, or maximum hourly protection.

Organizations offering a labeling and listing service should indicate such limitations on the label or supplementary marking. The AHJ should refer to the individual manufacturer's published listings when specific information is needed.

See Figure A.4.6.3.1(a) through Figure A.4.6.3.1(i).

A.6.4.3.1.1 Hinges are 5-, 3-, and 2-knuckle full-mortise, half-mortise, half-surface, and full-surface hinges and include spring, wide-throw, raised-barrel, and swing-clear designs. Door leaves up to 60 in. (1.52 m) in height require a minimum of two conventional hinges. An additional hinge is required for each increment of 30 in. (0.76 m) of door height, or fraction thereof, over 60 in. (1.52 m).

A.6.4.4.5.1 This provision limits their use to rooms not normally occupied by humans (e.g., transformer vaults and storage rooms).

A.6.4.4.10 See Figure A.4.6.3.1(a) through Figure A.4.6.3.1(i).

A.6.4.4.11 See Figure A.6.4.4.11.

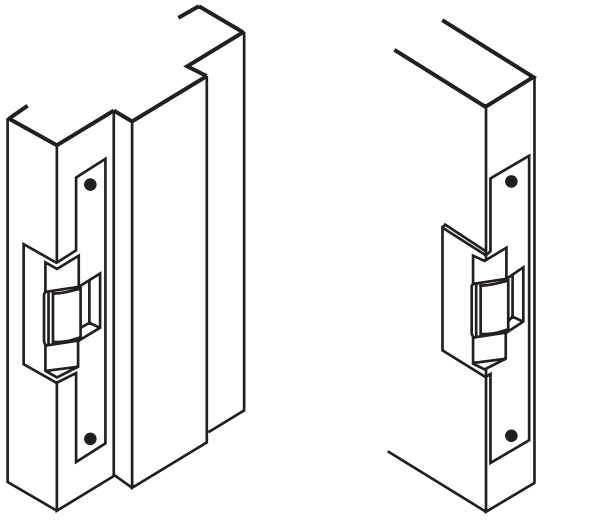

FIGURE A.6.4.4.11 Typical "Electric Strike" for Single Swinging and Pair of Doors Where Permitted by Individual Listings.

A.6.4.7 A split astragal can be considered a type of astragal.

A.6.4.7.2 See Figure A.4.6.3.1(b), Figure A.4.6.3.1(d), and 6.4.4.4.1.

A.7.3.2 Structural steel frames consist of head and jamb members, either shop or field assembled.

A.7.4.1 Self-closing devices for these doors consist of a system of weights suspended by ropes, wire cables, or chains over pulleys arranged to return the door to the normally closed position each time it is used.

Automatic-closing devices consist of a system of weights suspended by ropes, wire cables, or chains over pulleys and a hold-open device with a release mechanism that is activated by an automatic fire detector. Upon the detection of fire, additional closing weights are released, causing the door to close and latch.

The automatic-closing system described above can be permitted to be used with a listed releasing device in addition to fusible links and in conjunction with a fire detection system in order to actuate the closing system.

All weights should be enclosed in a substantial metal enclosure for their entire length of travel. Pulleys over which the weight cable or chain passes should be shielded to prevent the cable or chain from jumping off the pulley and thereby possibly preventing the door from closing. Typical arrangements are shown in Figure A.4.7.5(a) and Figure A.4.7.5(b).

A.7.4.3.3 Traditional requirements for hinges and latches, including their number and length, are shown in Table A.7.4.3.3(a) through Table A.7.4.3.3(c).

Copyright 2014 National Fire Protection Association (NFPA). Licensed, by agreement, for individual use and download on October 4, 2014 to LEADER and READER for designated user PATTARAPORN SRITRAKOOL. No other reproduction or transmission in any form permitted without written permission of NFPA. For inquires or to report unauthorized use, contact licensing@nfpa.org.

Table A.7.4.3.3(a) Fire Door Hardware — Hinges and Latches for Different Size Doors of Tin-Clad Construction

		Width of Door				
		0 ft to 2 ft 0 in.	2 ft 0 in. to 3 ft 0 in.	3 ft 0 in. to 4 ft 0 in.	4 ft 0 in. to 5 ft 0 in.	5 ft 0 in. to 6 ft 0 in.
Height of Door	Number of Latches	Number of Hinges	Number of Hinges	Number of Hinges	Number of Hinges	Number of Hinges
0 ft to 5 ft 0 in.	2	2	2	2	2	2
5 ft 0 in. to 6 ft 6 in.	2	2	2	2	3	3
6 ft 6 in. to 8 ft 6 in.	3	2	2	3	3	4
8 ft 6 in. to 10 ft 6 in.	4	3	3	3	4	4
10 ft 6 in. to 12 ft 0 in.	5	4	4	4	4	4

For SI units, 1 ft = 0.3048 m; 1 in. = 25.4 mm.

Table A.7.4.3.3(b) Fire Door Hardware — Length of Hinges and Latches for Different Widths of Doors of Tin-Clad Construction

Width of Door	Length of Hinges	Number of Holes in Hinge	Length of Latches
1 ft 6 in. to 1 ft 9 in. (inclusive)	16 in.	2	Not less than 14¾ in.
1 ft 9 in. to 2 ft 0 in.	19 in.	2	Not less than 14¾ in.
2 ft 0 in. to 2 ft 4 in.	22 in.	3	Not less than 14¾ in.
2 ft 4 in. to 2 ft 8 in.	25 in.	3	Not less than 14¾ in.
2 ft 8 in. to 3 ft 0 in.	28 in.	3	Not less than 14¾ in.
3 ft 0 in. to 3 ft 4 in.	31 in.	3	Not less than 14¾ in.
3 ft 4 in. to 3 ft 8 in.	34 in.	4	Not less than 14¾ in.
3 ft 8 in. to 4 ft 0 in.	37 in.	4	Not less than 14¾ in.
4 ft 0 in. to 4 ft 4 in.	40 in.	4	Not less than 14¾ in.
4 ft 4 in. to 4 ft 8 in.	43 in.	4	Not less than 14¾ in.
4 ft 8 in. to 5 ft 0 in.	46 in.	5	Not less than 14¾ in.
5 ft 0 in. to 5 ft 4 in.	49 in.	5	Not less than 14¾ in.
5 ft 4 in. to 5 ft 8 in.	52 in.	5	Not less than 14¾ in.
5 ft 8 in. to 6 ft 0 in.	55 in.	5	Not less than 14¾ in.

For SI units, 1 ft = 0.3048 m; 1 in. = 25.4 mm.

Table A.7.4.3.3(c) Fire Door Hardware — Numbers of Latches and Hinges for Sheet Metal Doors

Height of Door*	Number of Latches	Number of Hinges
0 ft to 5 ft 3 in.	2	2
5 ft 4 in. to 8 ft 3 in.	3	3
8 ft 4 in. to 10 ft 3 in.	4	4
10 ft 4 in. to 12 ft 4 in.	5	4

For SI units, 1 ft = 0.3048 m; 1 in. = 25.4 mm.
*For heights in fractional inches, use next higher full inch.

Copyright 2014 National Fire Protection Association (NFPA). Licensed, by agreement, for individual use and download on October 4, 2014 to LEADER and READER for designated user PATTARAPORN SRITRAKOOL. No other reproduction or transmission in any form permitted without written permission of NFPA. For inquires or to report unauthorized use, contact licensing@nfpa.org.

A.8.1.2.7 See Figure A.8.1.2.7(a) through Figure A.8.1.2.7(c).

A.8.1.3.1.1 See Figure A.4.6.4(a) through Figure A.4.6.4(g).

A.8.2.1.2 See Figure A.4.8.1.3(b).

A.8.4.1.1.2 See Figure A.4.7.5(c) through Figure A.4.7.5(h) and Figure A.4.6.4(b) through Figure A.4.6.4(e).

A.8.4.2 If the power operator is of a type that does not close under power failure, then the door should be disconnected from the operator and caused to close under fire conditions. Closure is accomplished by a listed releasing device activated by the closing system. If the power operator is to close the door under fire conditions, its logic circuit should be such that, upon a signal from the fire detection system, it closes under power operation.

A.8.4.3.1 Fire door hardware can include tracks, hangers, bottom rollers, track brackets, bumpers, binders, pull handles, stay rollers, center latches, center floor stops, astragals, and center binders. In the case of detention security applications, fire door hardware can also include a listed detention sliding door device *(see Section H.2)*.

A.8.4.3.5.1 See Figure A.4.6.4(f) and Figure A.4.6.4(g).

A.8.4.3.6 See Figure A.8.4.3.6(a) through Figure A.8.4.3.6(g).

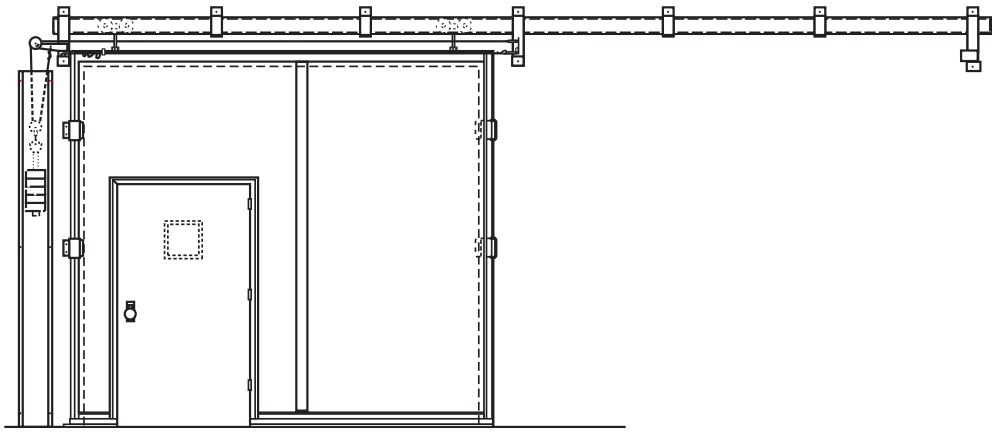

FIGURE A.8.1.2.7(a) Combination Swinging Pass Door and Sliding Door — Arrangement A.

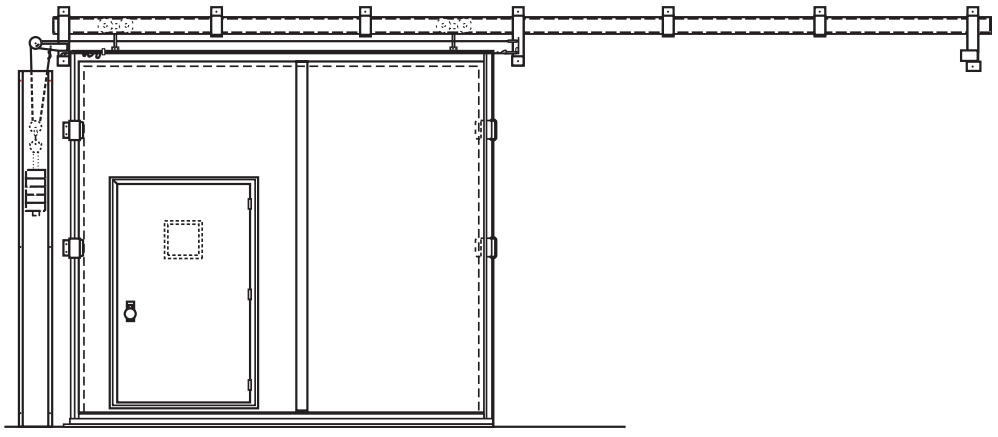

FIGURE A.8.1.2.7(b) Combination Swinging Pass Door and Sliding Door — Arrangement B.

Copyright 2014 National Fire Protection Association (NFPA). Licensed, by agreement, for individual use and download on October 4, 2014 to LEADER and READER for designated user PATTARAPORN SRITRAKOOL. No other reproduction or transmission in any form permitted without written permission of NFPA. For inquires or to report unauthorized use, contact licensing@nfpa.org.

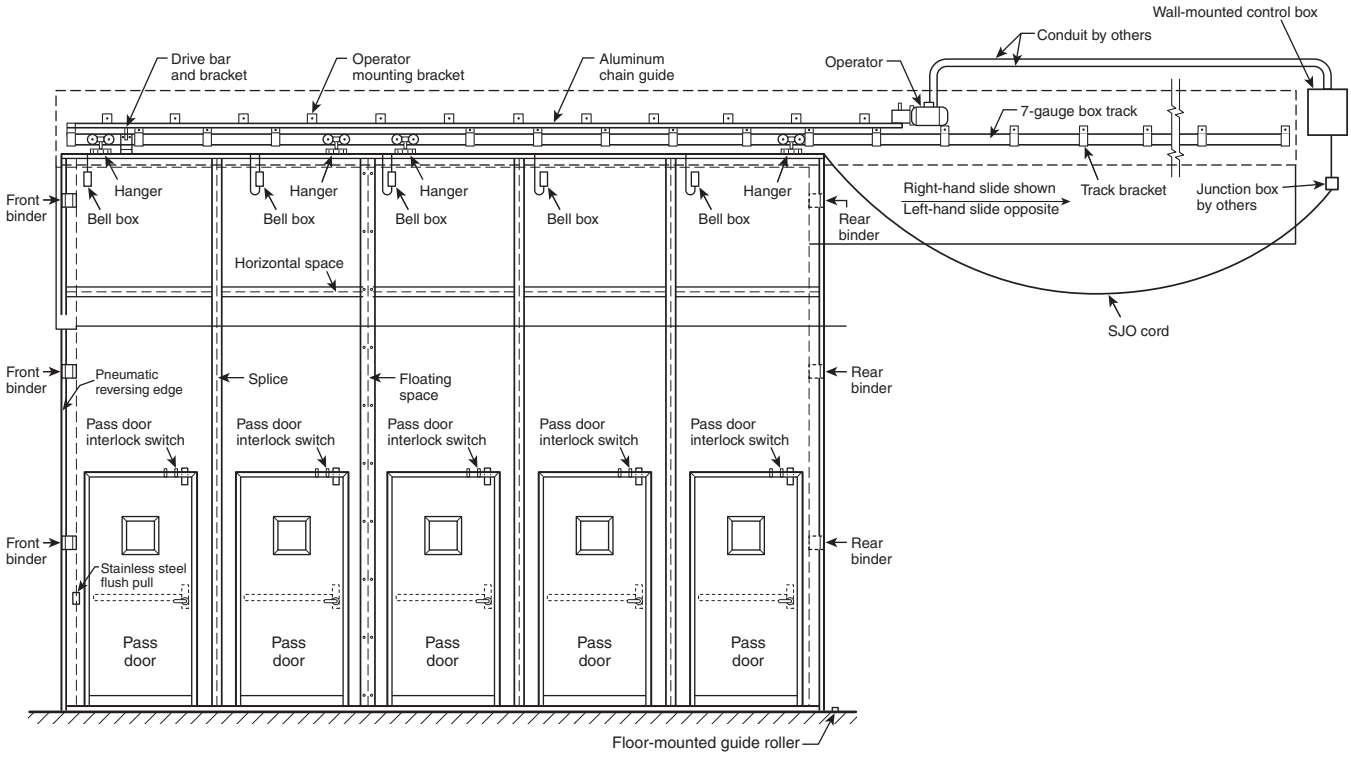

FIGURE A.8.1.2.7(c) Combination Swinging Pass Door and Sliding Door — Arrangement C.

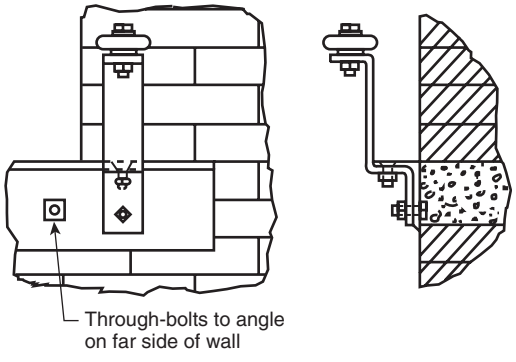

FIGURE A.8.4.3.6(a) Stay Roller — Arrangement A.

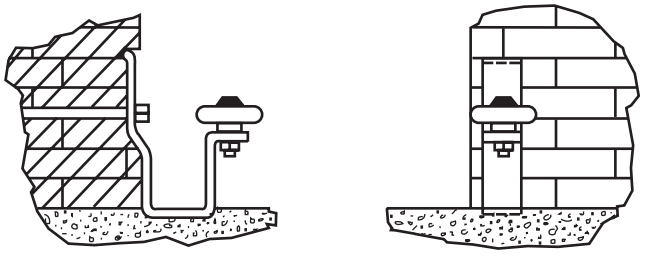

FIGURE A.8.4.3.6(c) Stay Roller — Arrangement C.

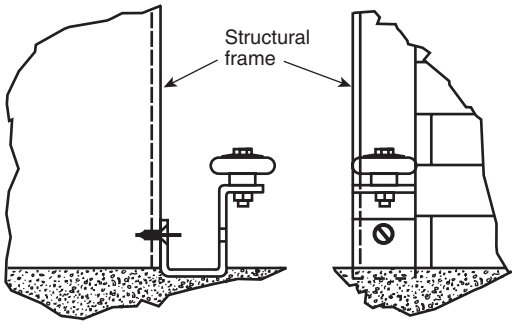

FIGURE A.8.4.3.6(b) Stay Roller — Arrangement B.

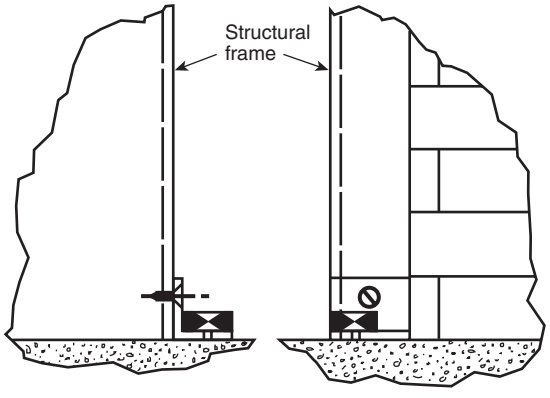

FIGURE A.8.4.3.6(d) Concealed-Type Stay Roller — Arrangement A.

Copyright 2014 National Fire Protection Association (NFPA). Licensed, by agreement, for individual use and download on October 4, 2014 to LEADER and READER for designated user PATTARAPORN SRITRAKOOL. No other reproduction or transmission in any form permitted without written permission of NFPA. For inquires or to report unauthorized use, contact licensing@nfpa.org.

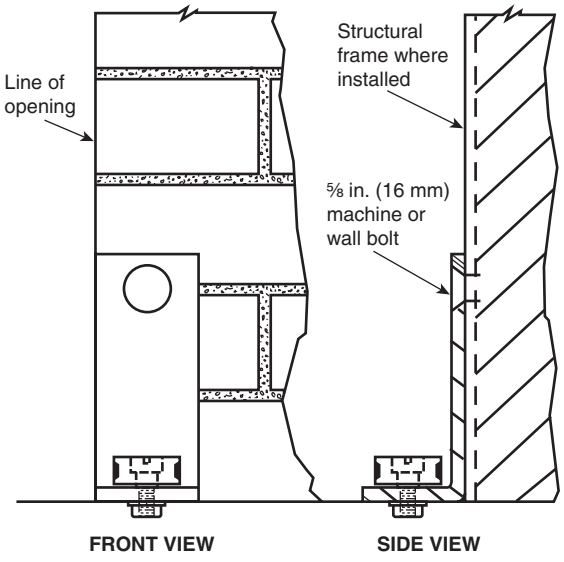

FIGURE A.8.4.3.6(e) Concealed-Type Stay Roller — Arrangement B.

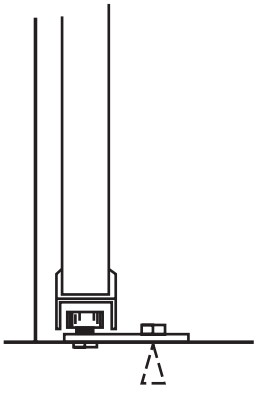

FIGURE A.8.4.3.6(f) Stay Roller — Arrangement D.

A.9.1.3.1 See Figure A.9.1.3.1(a) and Figure A.9.1.3.1(b).

A.9.1.3.3 See Figure A.9.1.3.3(a) and Figure A.9.1.3.3(b).

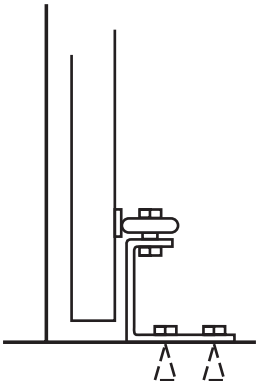

FIGURE A.8.4.3.6(g) Stay Rollers.

A.9.2.3.1 See Figure A.9.1.3.1(a) and Figure A.9.1.3.1(b).

A.9.3 Where door assemblies are used for smoke or draft control, gasketing or reduced clearances might be necessary. *(See NFPA 105, Standard for Smoke Door Assemblies and Other Opening Protectives.)*

A.10.4.3.1 See Figure A.4.6.4(h).

A.10.4.3.1.2 The length of the track is expressed in terms of the height of the opening, with 4 in. (102 mm) allowed for the lap of the door, 4 in. (102 mm) for the attachment of the bumper, and 1 in. (25.4 mm) for clearance when the door is fully open.

A.10.4.3.1.7 See Figure A.4.6.4(h).

A.11.1.2.1 See Figure A.4.7.5(k) and Figure A.4.7.5(l).

A.11.4.2 Power-operated rolling steel fire doors are those that normally are opened or closed by power.

A.11.4.3.1.3 See Figure A.4.7.5(k) and Figure A.4.7.5(l).

A.12.3 Shutters can be permitted to be installed on the inside or outside of an opening or between jambs but preferably on the inside or between jambs for ease of maintenance and protection from adverse weather conditions.

A.14.1.1 Where fire door assemblies are installed in front of hoistway doors, the fire doors should be installed in accordance with the appropriate chapter in this standard for the type of door being installed.

Copyright 2014 National Fire Protection Association (NFPA). Licensed, by agreement, for individual use and download on October 4, 2014 to LEADER and READER for designated user PATTARAPORN SRITRAKOOL. No other reproduction or transmission in any form permitted without written permission of NFPA. For inquires or to report unauthorized use, contact licensing@nfpa.org.

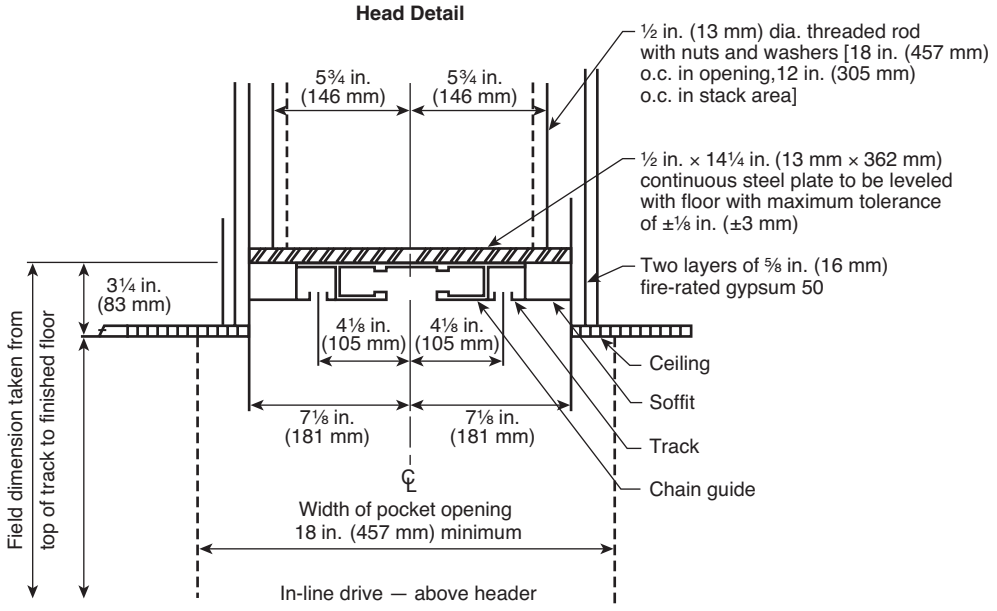

FIGURE A.9.1.3.1(a) Typical Lintel (Head) Detail for Horizontally Sliding Accordion or Folding Door.

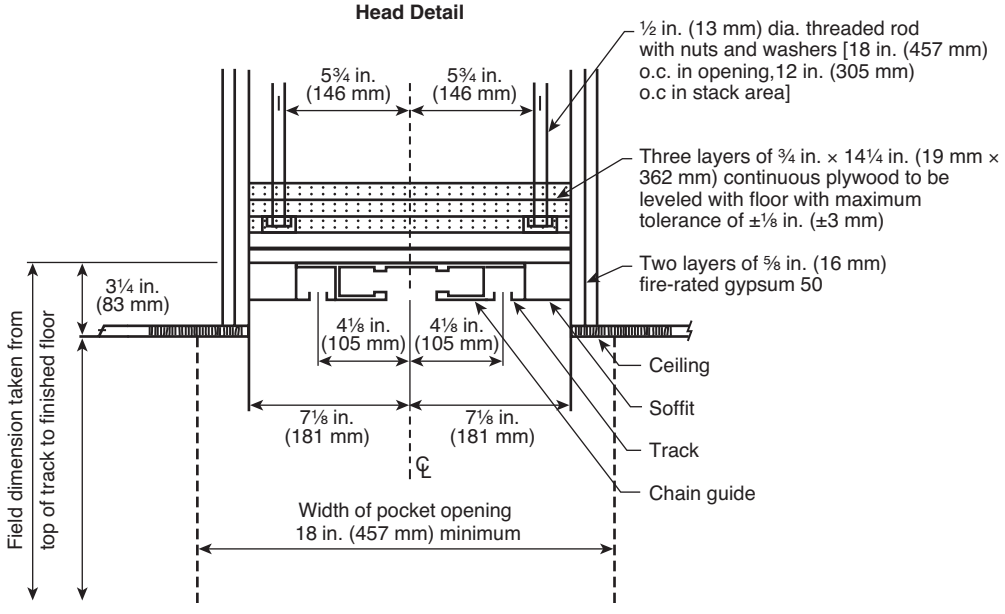

FIGURE A.9.1.3.1(b) Typical Applied Lintel (Head) Detail for Horizontally Sliding Accordion or Folding Door.

A.14.2.1.3 See Figure A.14.2.1.3.

A.14.2.1.4 See Figure A.14.2.1.3.

A.14.2.2.3 See Figure A.14.2.2.3(a) and Figure A.14.2.2.3(b).

A.14.2.2.4 See Figure A.14.2.2.3(a) and Figure A.14.2.2.3(b).

A.14.2.3 See Figure A.14.2.3(a) through Figure A.14.2.3(c).

Copyright 2014 National Fire Protection Association (NFPA). Licensed, by agreement, for individual use and download on October 4, 2014 to LEADER and READER for designated user PATTARAPORN SRITRAKOOL. No other reproduction or transmission in any form permitted without written permission of NFPA. For inquires or to report unauthorized use, contact licensing@nfpa.org.

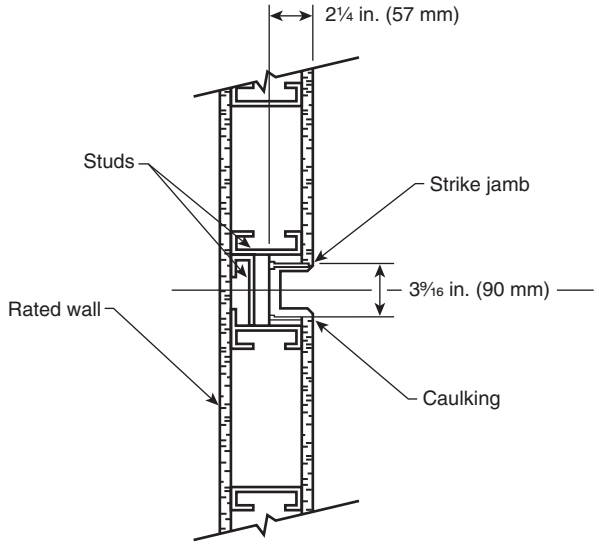

FIGURE A.9.1.3.3(a) Typical Strike Jamb for Horizontally Sliding Accordion or Folding Door.

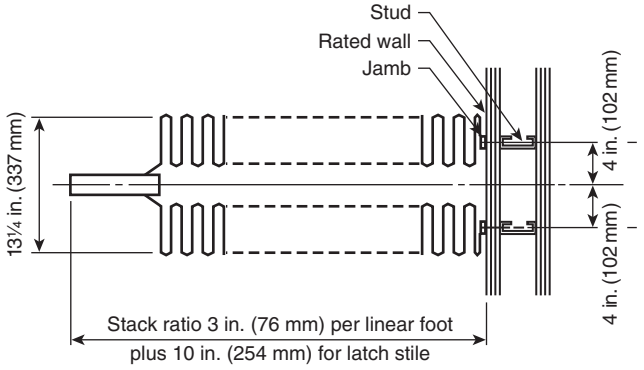

FIGURE A.9.1.3.3(b) Typical Horizontally Sliding Accordion or Folding Door with No Pocket.

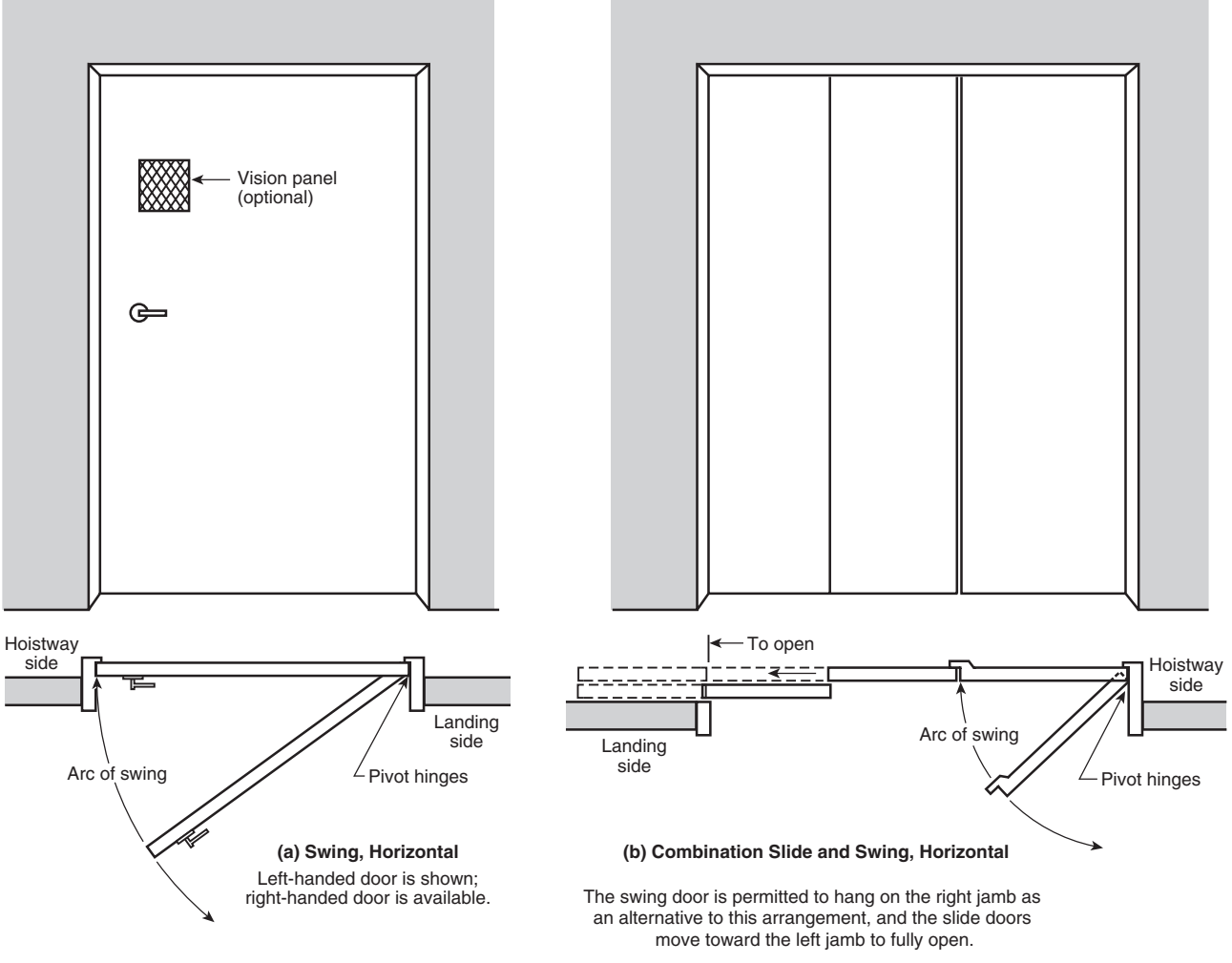

FIGURE A.14.2.1.3 Horizontal Swinging and Horizontal Combination Sliding and Swinging Doors.
(Courtesy of ASME A17.1, Handbook on Safety Code for Elevators and Escalators.)

Copyright 2014 National Fire Protection Association (NFPA). Licensed, by agreement, for individual use and download on October 4, 2014 to LEADER and READER for designated user PATTARAPORN SRITRAKOOL. No other reproduction or transmission in any form permitted without written permission of NFPA. For inquires or to report unauthorized use, contact licensing@nfpa.org.

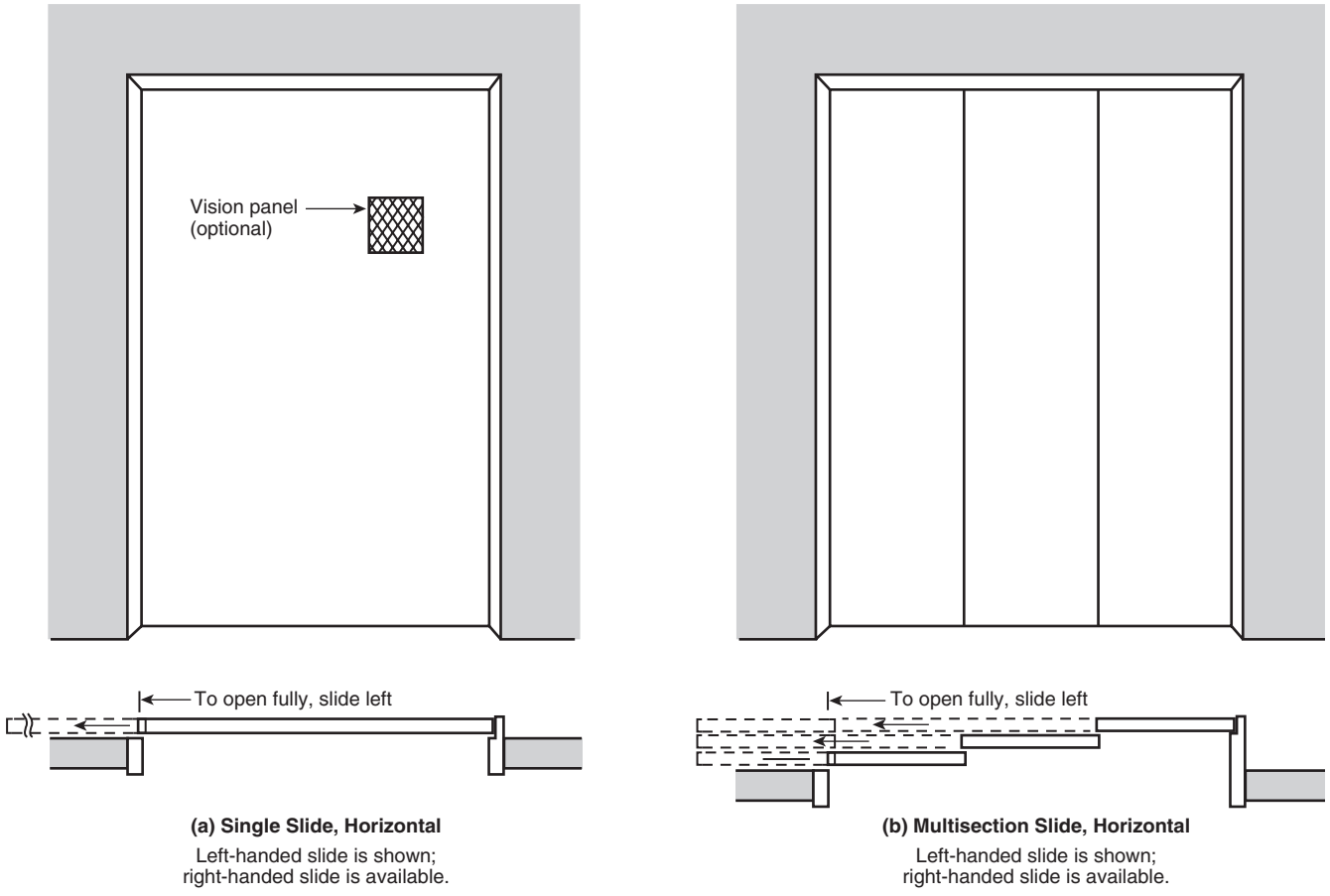

FIGURE A.14.2.2.3(a) Horizontal Single Sliding and Horizontal Multisection Sliding Doors.
(Courtesy of ASME A17.1, Handbook on Safety Code for Elevators and Escalators.)

A.15.1.2 Some chute doors, depending on location, might be required to have a temperature rise of not more than 250°F (139°C) at the end of a 30-minute exposure to the standard fire test as described in NFPA 252, *Standard Methods of Fire Tests of Door Assemblies*.

A.17.1.3 The labeled assembly includes the frame and can include a ventilator, glazing material, retaining members, mullions, and hardware, if applicable. The label reading "Fire Window Frame" includes the design and construction of the frame, ventilator, glazing material retaining members, and hardware. *(See Annex C for types of fire window ventilators.)*

A.17.2.1 The content of the labeling on individual fire protection–rated (tested to NFPA 252, *Standard Methods of Fire Tests of Door Assemblies*, or NFPA 257, *Standard on Fire Test for Window and Glass Block Assemblies*) and fire resistance–rated (tested to ASTM E119, *Standard Methods for Fire Tests of Building Construction and Materials*) glazing should identify the manufacturer, rating, third-party testing agency, test standard, and whether the hose stream test was successfully performed.

A.17.2.2 The AHJ should be consulted on local building code requirements that might have more restrictive limitations on the maximum size and the total area of fire windows required to protect openings in interior partitions and exterior walls. Previous editions of NFPA 80 contained a table addressing the maximum area of glazing in fire windows as a function of the fire protection rating. The table has been deleted in favor of reliance on the testing and listing process. However, it should be noted that building codes typically limit the use of fire windows in interior applications to construction requiring a fire resistance rating of 1 hour or less.

A.18.1.1 An example of where the code might prohibit the use of fire protection glass block assemblies would be 1-hour exit enclosures. Some fire protection glass block assemblies have been tested for 60 minutes or longer. Regardless of the duration of the fire test to which they have been subjected, fire protection glass block assemblies are not permitted in interior wall assemblies required to have a fire resistance rating in excess of 1 hour.

A.19.1.1 Fire dampers, including ceiling dampers, are installed in ducts passing through or in air outlet openings terminating at shaft walls, fire wall, occupancy separation wall, horizontal exit walls, corridor walls, corridor ceilings, floor-ceiling assemblies, and other fire resistance–rated partitions as required by the model building code and the applicable NFPA codes and standards.

A.19.2.1 For a description of fire dampers, see the UL *Fire Resistance Directory*; AMCA 503, *Fire, Ceiling (Radiation), Smoke and Fire/Smoke Dampers Application Manual*; and the SMACNA *Fire, Smoke and Radiation Damper Installation Guide for HVAC Systems*.

Copyright 2014 National Fire Protection Association (NFPA). Licensed, by agreement, for individual use and download on October 4, 2014 to LEADER and READER for designated user PATTARAPORN SRITRAKOOL. No other reproduction or transmission in any form permitted without written permission of NFPA. For inquires or to report unauthorized use, contact licensing@nfpa.org.

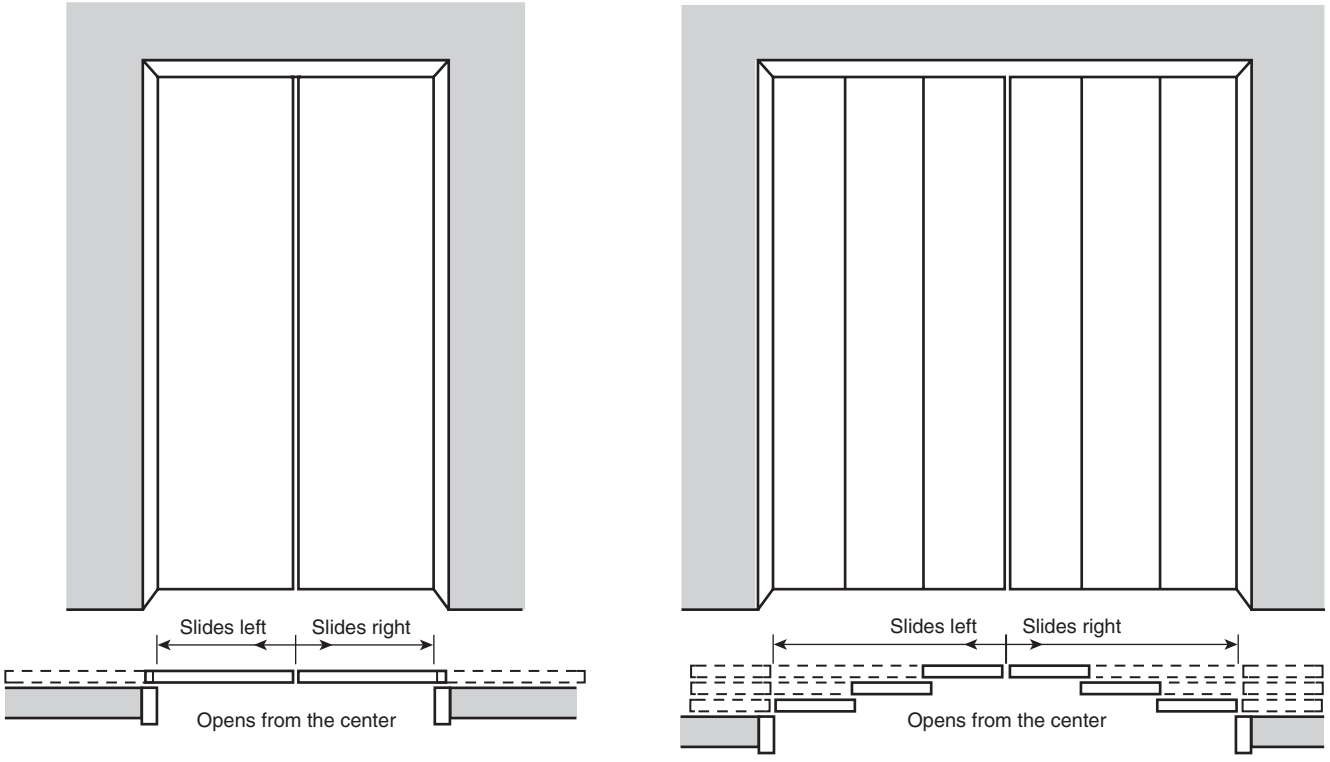

(a) Center-Parting, Horizontal Slide Doors
Two sections, single speed

(b) Center-Parting, Horizontal Slide Doors
Multiple sections, multiple speeds

FIGURE A.14.2.2.3(b) Center-Parting, Two-Section, Single-Speed Doors and Multiple-Section, Multiple-Speed Horizontally Sliding Doors. ***(Courtesy of ASME A17.1, Handbook on Safety Code for Elevators and Escalators.)***

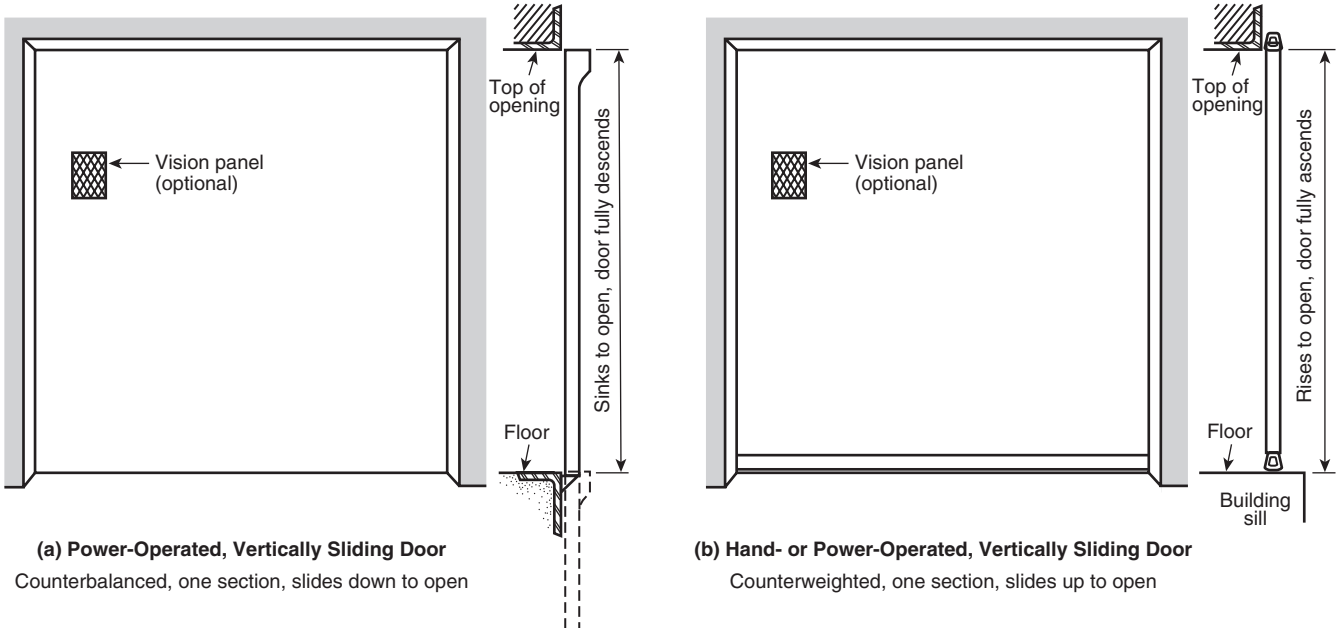

(a) Power-Operated, Vertically Sliding Door
Counterbalanced, one section, slides down to open

(b) Hand- or Power-Operated, Vertically Sliding Door
Counterweighted, one section, slides up to open

FIGURE A.14.2.2.3(a) Power-Operated, Vertically Sliding Door and Hand- or Power-Operated, Vertically Sliding Door. ***(Courtesy of ASME A17.1, Handbook on Safety Code for Elevators and Escalators.)***

Copyright 2014 National Fire Protection Association (NFPA). Licensed, by agreement, for individual use and download on October 4, 2014 to LEADER and READER for designated user PATTARAPORN SRITRAKOOL. No other reproduction or transmission in any form permitted without written permission of NFPA. For inquires or to report unauthorized use, contact licensing@nfpa.org.

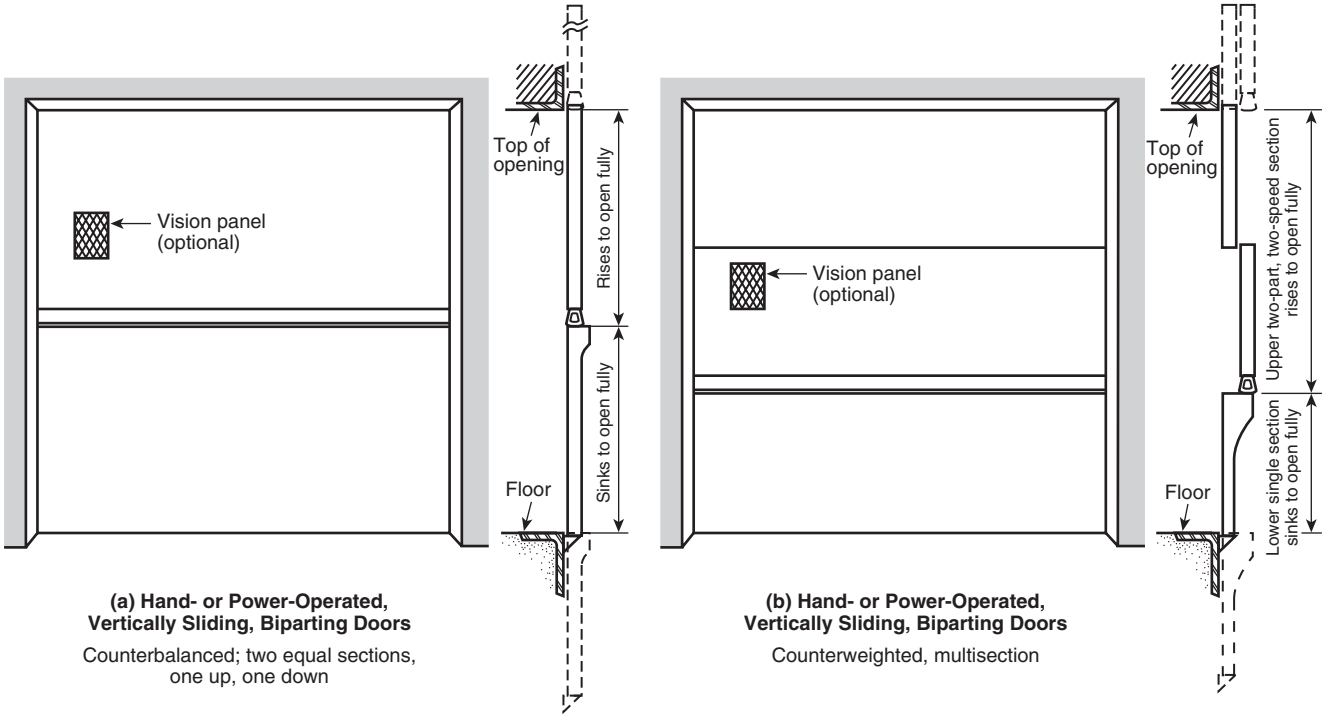

FIGURE A.14.2.3(b) Hand- or Power-Operated, Vertically Sliding, Biparting and Slide-Parting Doors.
(Courtesy of ASME A17.1, Handbook on Safety Code for Elevators and Escalators.)

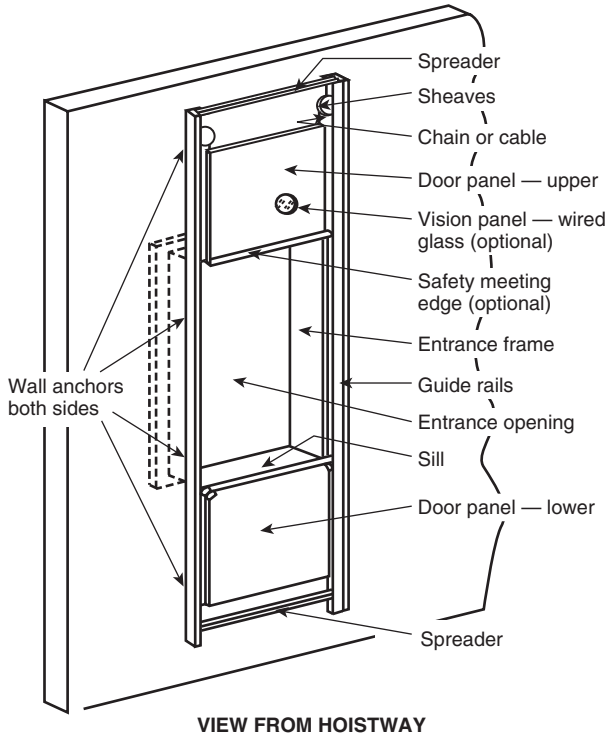

FIGURE A.14.2.3(c) Dumbwaiter Assembly Installation for Vertically Biparting Doors.

A.19.2.1.4 Wall or floor openings are usually larger than the outer dimensions of the damper sleeve to allow for thermal expansion of the damper. The exact clearance requirement differs depending on size and type of dampers.

A.19.2.4 Some such devices are listed in the UL *Fire Resistance Directory* under the category Ceiling Dampers (CABS).

A.19.3.1.7 Fusible links are marked with temperature ratings. The common temperature ratings of fusible links are listed in Table A.19.3.1.7.

Table A.19.3.1.7 Common Temperature Ratings of Fusible Links

Temperature Classification	Maximum Ambient Temperature (°F)	Temperature Rating (°F)
Low	90	125–130
Ordinary	100	135–170
Intermediate	150	175–225
High	225	250–300
Extra high	300	325–375
Very extra high	375	400–475
Ultra high	475	500–575

Note: For SI units, $C = \frac{5}{9}(F - 32)$, where C = degrees Celsius and F = degrees Fahrenheit.

A.19.4 Effects on other building components, systems, and building occupants should be evaluated before testing by qualified personnel.

Copyright 2014 National Fire Protection Association (NFPA). Licensed, by agreement, for individual use and download on October 4, 2014 to LEADER and READER for designated user PATTARAPORN SRITRAKOOL. No other reproduction or transmission in any form permitted without written permission of NFPA. For inquires or to report unauthorized use, contact licensing@nfpa.org.

A.19.5.2 Each damper should be examined to ensure that it is not rusted or blocked, with attention given to hinges and other moving parts.

A.20.1.1 Fire safety curtain assemblies work with other building life and fire safety systems. These systems include but are not limited to type of building construction, crowd management, fire detection and notification systems, ventilation, emergency egress fire suppression, smoke management, and emergency illumination. Fire safety curtain assemblies are intended to provide 20 minutes of protection for audience members to orderly and safely evacuate the audience chamber.

It is unknown if proscenium fabric fire safety curtains will perform the same fire protection function provided by individually tested and labeled fire door assemblies described in other sections of NFPA 80.

A.20.1.4.2 The specific skills and experience necessary to install, test, and maintain a fire safety curtain assembly are unique. The number of assemblies installed each year is low in comparison to most opening protectives. There is no nationally recognized training program, certification, or licensing currently. The AHJs should rely on their personal knowledge of and experience with the contractor and installer; third-party testaments, reports, and recommendations; other evidence that might be presented; or a combination of these.

A.20.2.1.3 ASTM D5034, *Standard Test Method for Breaking Strength and Elongation of Textile Fabrics (Grab Test),* although not specifically recommended for fiberglass fabrics, has been successfully used to measure tensile strength since the early 1990s. Using the standard test jaw clamping method causes the fabric to prematurely fail where it is clamped into the testing jaws. The test jaws used to hold the fabric are either padded or covered with rubber, or the fabric is glued into the jaws in such a way that the fabric will break at a place other than where the fabric enters the jaws.

A.20.2.1.5 Flame-resistant thread is constructed of fiberglass, Kevlar®, or equivalent materials that have a fire rating equal to the fire safety curtain material. Currently, flame-resistant thread is not tested; rather, the ASTM E119, *Standard Test Methods for Fire Tests of Building Construction and Materials*, testing of the curtain fabric with stitching validates flame resistance of the thread.

A.20.2.1.12 For the purposes of this standard, selvedged edges are considered finished.

A.20.2.1.14 Fire safety curtain assemblies provide protection for proscenium openings but are not intended to provide the same level of fire separation as would be provided by fire resistance–rated construction assemblies. Fire safety curtain assemblies are intended to provide only a reasonable level of separation of the audience from on-stage fires for a period sufficient for evacuation of the audience. As such, the temperature rise condition of acceptance in ASTM E119, *Standard Test Methods for Fire Tests of Building Construction and Materials*, is not applied to fire safety curtain materials. The only conditions of acceptance applied in ASTM E119 restrict the passage of flame or hot gases. These conditions of acceptance are pertinent to the protection of the audience.

A.20.2.1.14.3 A 2 in. (50.8 mm) diameter Schedule 40 pipe is used for testing only as a method of putting a load on the fire safety curtain fabric as a part of the test. A 2 in. (50.8 mm) diameter Schedule 40 pipe is the bottom batten used for approximately 85 percent of all fire safety curtain installations. The 2 in. (50.8 mm) diameter Schedule 40 pipe batten requirement for testing is not intended to apply to batten installation requirements found in 20.6.5.

A.20.2.2.2 With the exception of dimensional and building-specific installation requirements, the test fire safety curtain is provided to test a typical installation. Testing is performed to evaluate fabric compliance only; all seams and thread in finished curtains using the approved fabric shall be finished exactly as submitted and approved during the approval testing.

A.20.2.3.1 Fire safety curtain assembly designs and installations utilize methods to effectively impede airflow around all perimeter edges of the fire safety curtain assembly. Bottom seals are constructed to reduce and impede the movement of all products of combustion from the stage side of the fire safety curtain to the audience area.

A.20.6.5.2 Vertical guide pockets use the proscenium wall to provide lateral stability to the curtain assembly. It is important that the attachment of the vertical guide pockets to the back of the proscenium wall be strong enough to both provide the lateral stability and resist a lateral imposed pressure of 2 lb/ft^2 (9.8 kg/m^2) over the entire surface of the fire safety curtain assembly that has been used in some jurisdictions for framed and unframed curtains.

A.20.6.5.3 Where fastened, grade 5 bolts, ½ in. (12.7 mm) minimum diameter bolts spaced not more than 4 ft (1.2 m) on center or ⅜ in. (9.5 mm) diameter bolts spaced not more than 2 ft (0.61 m) on center, should be used.

A.20.6.9.3 The American Gear Manufacturers Association (AGMA) provides guidance for the selection of gear boxes used in winches.

A.20.6.10.6 These signs are necessary because it would be dangerous for a technician to hold the button to lower the fire safety curtain while the rest of the building is being evacuated.

A.20.7.1.1 Having the fire safety curtain assembly in a closed position has many advantages. First, the fire safety curtain gets moved and used, helping to ensure that during an emergency it will perform as expected. Second, problems with the fire safety curtain will be noticed while it is being closed or reset, and maintenance can be performed in a timely fashion. Third, the technicians, janitors, and users are conscious of the fact that there is a fire safety curtain and that the area below it, along with the vertical guide pockets, needs to be kept clear of obstructions. Fourth, technicians, janitors, and users become familiar with the fire safety curtain and its workings, are less afraid to use it, and are less likely to overlook this piece of safety equipment.

A.20.7.3.1 It might not be advisable to activate the fire safety curtain assembly with detection devices located in other areas of the building.

A.20.7.3.4 The manual emergency release stations are usually located next to the exit door located in the proscenium wall. This is done so that it is within easy reach of a technician leaving the area in the event of an emergency. It should be noted that these release stations should not be located behind anything that would obstruct the view or usage of the emergency release station.

Copyright 2014 National Fire Protection Association (NFPA). Licensed, by agreement, for individual use and download on October 4, 2014 to LEADER and READER for designated user PATTARAPORN SRITRAKOOL. No other reproduction or transmission in any form permitted without written permission of NFPA. For inquires or to report unauthorized use, contact licensing@nfpa.org.

A.20.7.3.5 An example of the signage would be the following:

IN CASE OF FIRE, BREAK GLASS AND PULL
HANDLE TO LOWER FIRE SAFETY CURTAIN.

A.20.8.5 The use of normal building-applied power to either activate or lower the fire safety curtain in an emergency would not be possible if there is a power outage. Any power needed to activate or lower the fire safety curtain must either have a monitored battery backup or be connected to the building's emergency power system.

Annex B Fire Doors: Protection of Conveyor Openings

This annex is not a part of the requirements of this NFPA document but is included for informational purposes only.

B.1 Material-handling systems extensively employ conveyors to transport raw materials, components, and finished goods to their destination within the building, and frequently their routes pass through more than one fire division. To correct a misconception that conveyor openings cannot be protected by fire doors, this annex provides guidance on and illustrations of several methods of engineered fire door applications that have been employed successfully. Ingenuity might suggest other designs. In all cases, the AHJ should be consulted for approval.

B.2 Where possible, conveyor penetration of a fire wall should be avoided by rerouting or, as is sometimes feasible with a one-story building, by running the conveyor through the roof, over the fire wall, and down within an inverted "V" housing arranged to vent fire readily to the atmosphere. *(See Figure B.2.)*

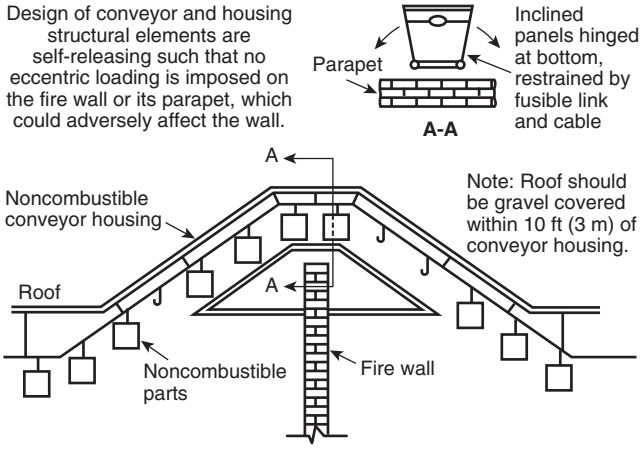

FIGURE B.2 Conveyor Carried over a Fire Wall.

B.3 Any cutout of a labeled fire door done in the field to allow for closure around a conveyor track or other component voids its label. This practice should be avoided, if possible. Where notching is distinctly advantageous, a certificate can be furnished by the testing laboratory, at the request of the manufacturer, to the manufacturer, the property owner, and the enforcing authority, provided that inspection indicates that the notched door is in compliance with the laboratory standards in all other respects.

B.4 Figure B.4(a) through Figure B.4(e) illustrate various conveyor designs, programming devices, and combinations thereof that minimize or eliminate the threat of obstruction to complete fire door closure by the conveyor or conveyed stock. Labeled doors and hardware should be used for the protection of these openings. If the opening is above floor level and no sill is provided, the door should lap the bottom of the opening by at least 4 in. (102 mm). Special stay rollers and special center guides for doors in pairs would be necessary in such a situation.

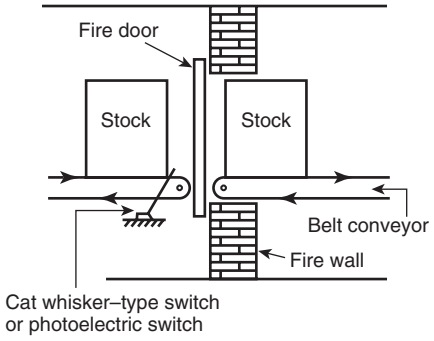

FIGURE B.4(a) Protection of Opening Where Belt Conveyor Can Be Interrupted.

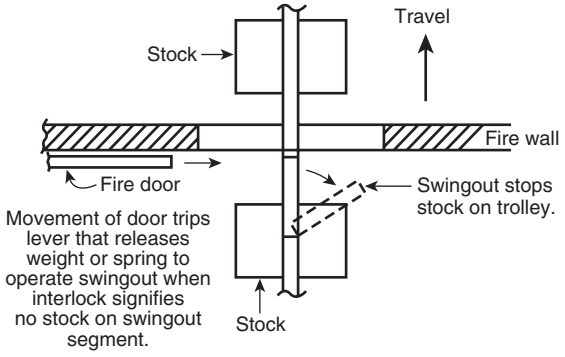

FIGURE B.4(b) Protection of Opening for Gravity Overhead Trolley.

B.5 Figure B.2 and Figure B.4(a) through Figure B.4(e) illustrate only the basic concepts. Proper performance depends equally on conservative design, good workmanship in installation, the operating inspection, and maintenance. Section B.6 outlines a number of important criteria that should be incorporated in planning the suggested arrangements or modifications or in using other concepts developed for specific applications.

B.6 Parameters for Operation and Design.

B.6.1 The selected design should be as simple and direct in operation as possible and should provide reliable performance. Emphasis should be on fail-safe operation.

Copyright 2014 National Fire Protection Association (NFPA). Licensed, by agreement, for individual use and download on October 4, 2014 to LEADER and READER for designated user PATTARAPORN SRITRAKOOL. No other reproduction or transmission in any form permitted without written permission of NFPA. For inquires or to report unauthorized use, contact licensing@nfpa.org.

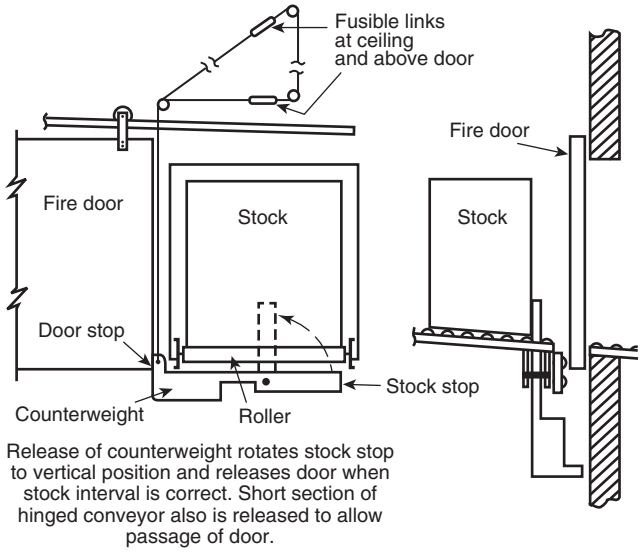

FIGURE B.4(c) Method of Stopping Stock on a Gravity Roller Conveyor.

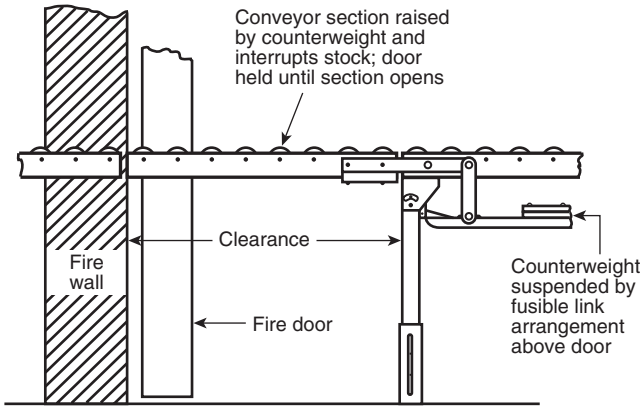

FIGURE B.4(d) Counterweight-Hinged Section of Roller Conveyor.

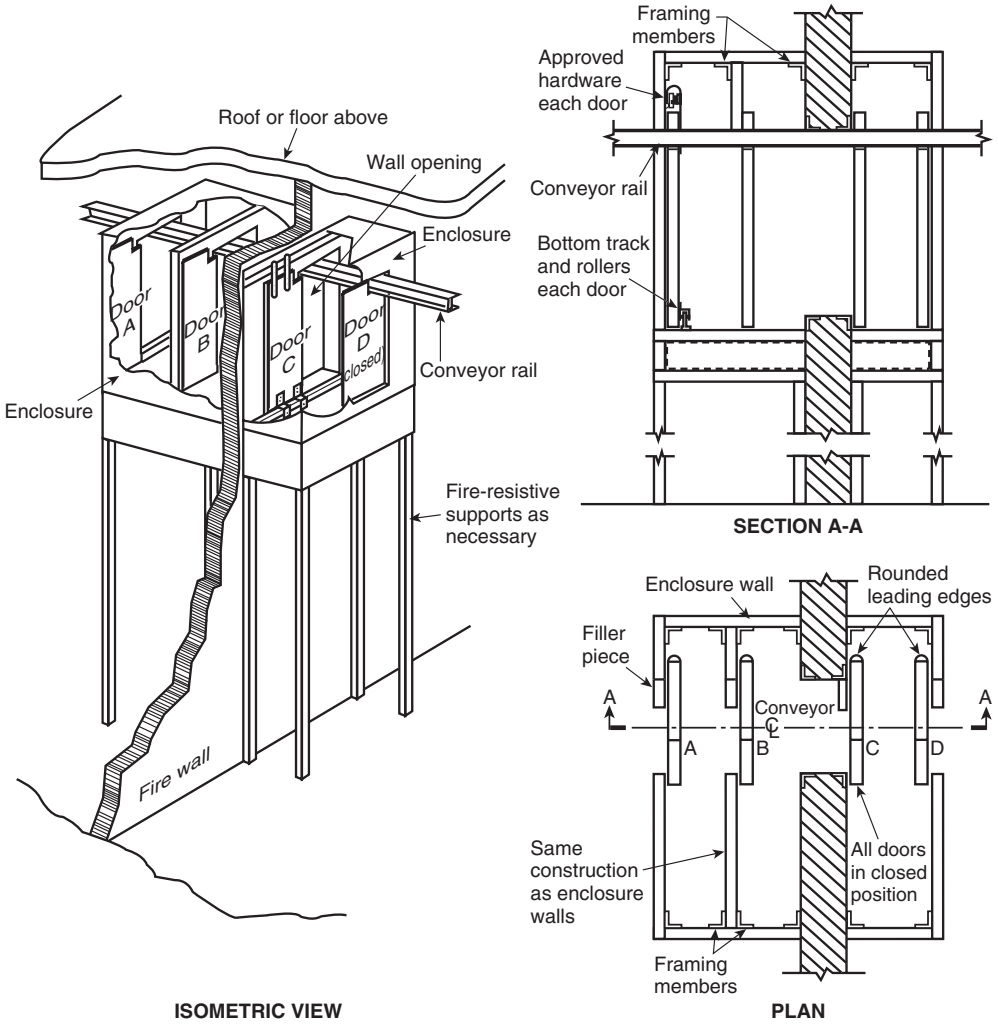

FIGURE B.4(e) Door Pack Installation.

Copyright 2014 National Fire Protection Association (NFPA). Licensed, by agreement, for individual use and download on October 4, 2014 to LEADER and READER for designated user PATTARAPORN SRITRAKOOL. No other reproduction or transmission in any form permitted without written permission of NFPA. For inquires or to report unauthorized use, contact licensing@nfpa.org.

B.6.2 The sequence of operating steps and interlock should be programmed such that obstruction (e.g., conveyor, conveyed material) to the door closure is positively and permanently (until manually reset) removed from the door's path before the door is released to close.

B.6.3 Structural and mechanical design of items, such as components, linkages, and clearances, should be conservative. Counterweights, springs, and other operating forces (uninterruptible by initial fire stages) should have an ample reserve of strength to handle overload introduced by a reasonable anticipated minor change in factors such as the configuration and weight of conveyed material, normal wear, and friction. Major changes necessitate complete re-engineering to ascertain the adequacy of the design, with reinforcement as necessary.

B.6.4 The design of conveyor components (e.g., trolley track, chain, supports) that pass through the opening should incorporate self-releasing features.

B.6.5 The clearance between the door and the sill should not exceed ⅜ in. (9.53 mm).

B.6.6 In some instances, it might be advisable to provide another fire door on the opposite side of the opening to increase the reliability of the protection of the wall opening in the event of a fire. Similarly, if the property is sprinklered, consideration should be given to the advisability of reinforcing the protection of the opening by a water curtain of automatic sprinklers.

B.6.7 Following installation, a number of operating tests should be conducted to reflect the range of adverse conditions that should be anticipated, in order to ascertain that all components operate smoothly, in proper sequence, within a specified time interval, and with adequate clearances and tolerances.

B.6.8 It is customary good practice to close all fire doors during inoperative periods, and it is even more important in the case of these specialized arrangements. Routine closure should simulate emergency operation, which then results in a regular inspection of the continued adequacy of the protection of the opening.

Annex C Illustration of Types of Fire Window Components

This annex is not a part of the requirements of this NFPA document but is included for informational purposes only.

C.1 Figure C.1 illustrates the various installation arrangements for fire windows.

Annex D Fire Door and Fire Window Classifications

This annex is not a part of the requirements of this NFPA document but is included for informational purposes only.

D.1 New and existing fire doors are classified by one of the following designation systems:

(1) Hourly rating designation
(2) Alphabetical letter designation
(3) A combination of (1) and (2)
(4) For horizontal access doors, a special listing indicating the fire-rated floor or floor–ceiling or roof–ceiling assemblies for which the door can be permitted to be used

D.2 The hourly designation indicates the duration of the fire test exposure and is known as the fire protection rating. Fire protection ratings of fire doors meeting this standard should be as determined and reported by a testing agency in accordance with NFPA 252, *Standard Methods of Fire Tests of Door Assemblies. (See ANSI/UL 10B, Standard for Safety Fire Tests of Door Assemblies; ANSI/UL 10C, Standard for Positive Pressure Fire Tests of Door Assemblies; and CAN/ULC-S104-10, Standard Method for Fire Tests of Door Assemblies.)*

D.3 The alphabetical letter designation was one method employed to classify the opening for which the fire door is considered suitable. Traditionally, the relationship between the alphabetical designation and its use was as follows:

(1) Class A — Openings in fire walls and in walls that divide a single building into fire areas
(2) Class B — Openings in enclosures of vertical communications through buildings and in 2 hour–rated partitions providing horizontal fire separations
(3) Class C — Openings in walls or partitions between rooms and corridors having a fire resistance rating of 1 hour or less
(4) Class D — Openings in exterior walls subject to severe fire exposure from outside the building
(5) Class E — Openings in exterior walls subject to moderate or light fire exposure from outside the building

D.4 Listings are provided for floor fire door assemblies that are installed in fire-rated floor–ceiling or roof–ceiling assemblies that have been tested in accordance with the methods described in NFPA 288, *Standard Methods of Fire Tests of Horizontal Fire Door Assemblies Installed in Horizontal Fire Resistance–Rated Assemblies*. The listing indicates the fire-rated assembly and the hourly rating (3 hours, 2 hours, 1½ hours, 1 hour, ¾ hour, or ½ hour) for which the door can be permitted to be used so that access to the space above the ceiling or to the floor above can be provided without adversely affecting the fire resistance rating of the entire assembly. The listing provides limitations on the maximum size of an individual door opening and the total area of all door openings permitted for each 100 ft^2 (9.3 m^2) of floor or ceiling.

D.5 One-half-hour (30-minute) and ⅓-hour (20-minute) fire doors are for use where smoke control is a primary consideration and are for the protection of openings in partitions between a habitable room and a corridor where the wall is constructed to have a fire resistance rating of not more than 1 hour or across corridors where a smoke partition is required.

D.6 Labels attached to each door provide evidence that the size of the door and the exposed glass area are permitted under this standard. In addition, where the temperature rise is shown, it indicates the temperature increase above ambient that has developed on the unexposed face of the door at the end of 30 minutes of exposure to the standard fire test. If the temperature rise is not indicated, the rise for the door is in excess of 650°F (343°C). The temperature rise through the glazing material used for glass lights is not measured.

D.7 Where fire doors are used in stairway enclosures, such doors should be constructed so that the maximum transmitted temperature end point should not exceed 450°F (232°C) above ambient at the end of 30 minutes of the standard fire exposure test.

D.8 Fire windows are classified by an hourly rating designation.

Copyright 2014 National Fire Protection Association (NFPA). Licensed, by agreement, for individual use and download on October 4, 2014 to LEADER and READER for designated user PATTARAPORN SRITRAKOOL. No other reproduction or transmission in any form permitted without written permission of NFPA. For inquires or to report unauthorized use, contact licensing@nfpa.org.

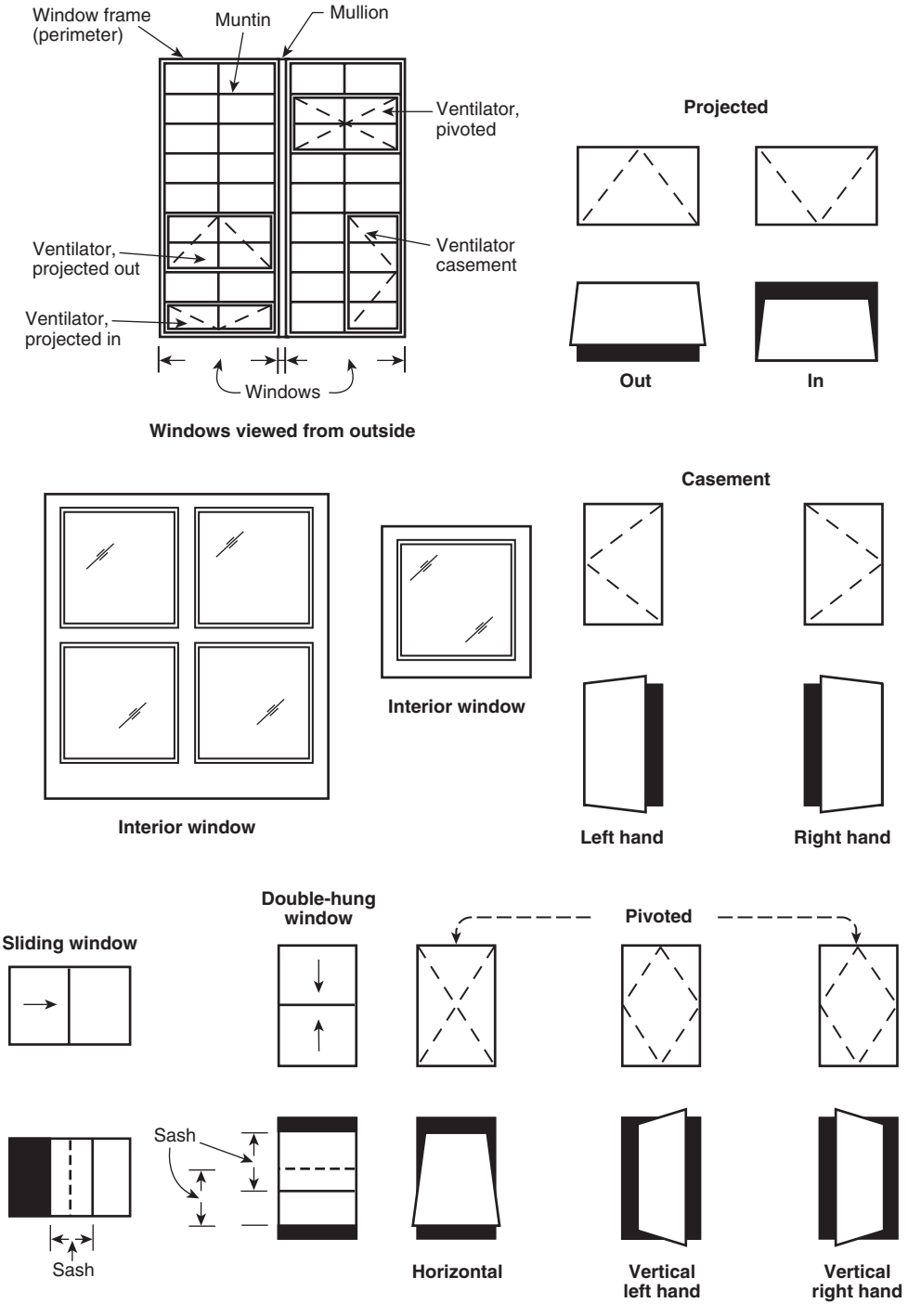

FIGURE C.1 Types of Fire Window Components.

D.9 Fire windows generally are considered suitable for protecting window openings in corridors, smoke barriers, or room partitions inside buildings, or in exterior walls for exterior exposures where such partitions or walls are required to have a fire resistance rating by the AHJ. Generally, such fire resistance ratings are not greater than 1 hour for interior partitions. However, exterior walls can have fire resistance ratings as high as 4 hours.

D.10 The hourly designation indicates the duration of the fire test exposure and is known as the fire protection rating. Fire protection ratings of windows meeting this standard should be as determined and reported by a testing agency in accordance with NFPA 257, *Standard on Fire Test for Window and Glass Block Assemblies. (See ANSI/UL 9, Standard for Safety Fire Tests of Window Assemblies, and CAN4-S106-M80, Standard Method for Fire Test of Window and Glass Block Assemblies.)* Fire resistance

Copyright 2014 National Fire Protection Association (NFPA). Licensed, by agreement, for individual use and download on October 4, 2014 to LEADER and READER for designated user PATTARAPORN SRITRAKOOL. No other reproduction or transmission in any form permitted without written permission of NFPA. For inquires or to report unauthorized use, contact licensing@nfpa.org.

glazing can be installed in a window tested in accordance with NFPA 257. However, fire resistance glazing installed in a hollow metal frame is not a fire resistance–rated assembly. Fire resistance–rated assemblies must be tested in accordance with ASTM E119, *Standard Test Methods for Fire Tests of Building Construction and Materials*.

D.11 Assemblies constructed with fire resistance–rated glazing materials that have been tested as fire-resistive walls or partitions in accordance with ASTM E119, *Standard Test Methods for Fire Tests of Building Construction and Materials*, are not considered fire windows. However, they can be permitted to be used in applications where fire windows are required, since they exceed the fire performance criteria for fire windows having a fire protection rating of the same duration.

Annex E Surface Attachments to Swinging Door Faces

This annex is not a part of the requirements of this NFPA document but is included for informational purposes only.

E.1 Surface attachments to swinging door faces generally fall into the following two categories:

(1) Plant-ons
(2) Protective plates

E.2 Plant-ons are usually decorative in nature and are used to impart a specific design or style. Plant-ons can be of various designs of flat material or can have a contoured shape, such as molding. Plant-ons project from the face surface of the door and are made of different materials, including wood, metals, and plastics. Plant-ons are attached to the door by a variety of methods such as adhesives, screws, nails, or other mechanical means that might penetrate the door face to achieve holding strength. Plant-ons can be attached per the manufacturer's listing instructions. The use of plant-ons should not prohibit the installation of small signs indicating the function, use, or location of doors.

E.3 Protective plates are usually utilitarian in nature and are used to provide additional resistance to wear or impact. Protective plates are usually flat sheets of metal or plastic applied on one or both door faces and located within the lower 16 in. (406 mm) of the door. Plates above this height could affect the fire performance of the door but can be permitted to be used if tested and approved. Attachment of protective plates to the door faces is achieved by a variety of methods such as adhesives, screws, or other mechanical means that might penetrate the door face to achieve holding strength.

Annex F Door Hardware Locations

This annex is not a part of the requirements of this NFPA document but is included for informational purposes only.

F.1 Doors not meeting the hardware location standard can be permitted to be labeled if covered in individual listings.

F.2 Figure F.2(a) through Figure F.2(c) represent the locations of hardware on fire doors.

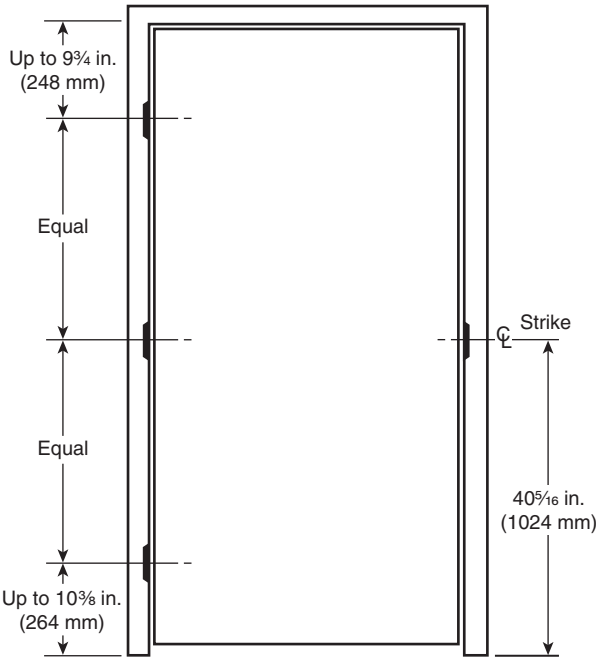

Note: On doors over 7 ft 6 in. (2.3 m), two equally spaced intermediate hinges are required.

FIGURE F.2(a) Swinging Wood Composite Fire Doors Equipped with Builders Hardware.

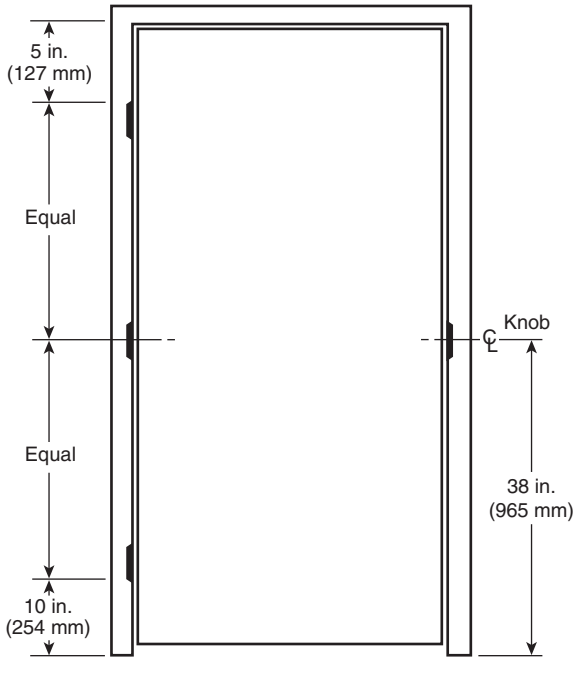

Note: On doors over 7 ft 6 in. (2.3 m), two equally spaced intermediate hinges are required.

FIGURE F.2(b) Custom Steel Hollow Metal and Composite Fire Doors Equipped with Builders Hardware.

Copyright 2014 National Fire Protection Association (NFPA). Licensed, by agreement, for individual use and download on October 4, 2014 to LEADER and READER for designated user PATTARAPORN SRITRAKOOL. No other reproduction or transmission in any form permitted without written permission of NFPA. For inquires or to report unauthorized use, contact licensing@nfpa.org.

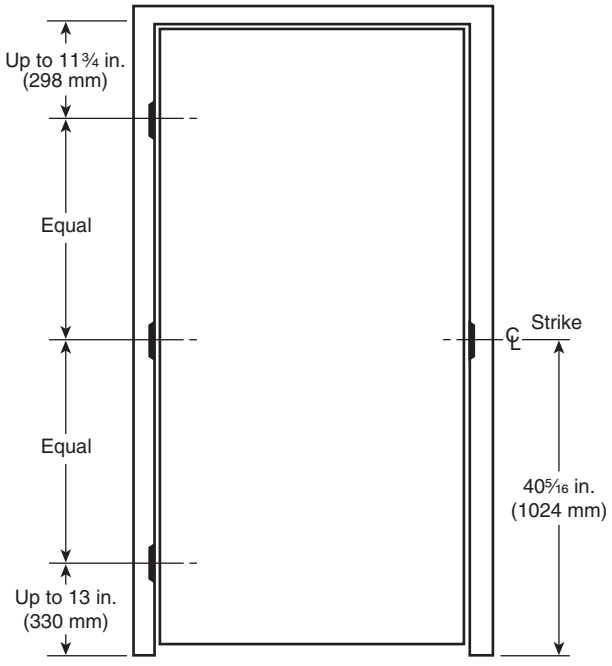

Note: On doors over 7 ft 6 in. (2.3 m), two equally spaced intermediate hinges are required.

FIGURE F.2(c) Standard Steel Hollow Metal and Composite Fire Doors Equipped with Builders Hardware.

Annex G Types of Door Construction

This annex is not a part of the requirements of this NFPA document but is included for informational purposes only.

G.1 General. The following types of door construction generally are described using the terminology of the industry and testing laboratory classification and are provided for identification of available doors.

G.2 Composite Doors. Composite fire doors consist of wood, steel, or plastic sheets bonded to and supported by a solid core material.

G.3 Hollow Metal Doors. Hollow metal fire doors are of flush or panel design with not less than 20-gauge steel faces. Flush door designs include steel stiffeners or core material to support the faces. The voids between stiffeners can be filled with insulating material. Panel door designs are of stile and rail construction with insulated panels.

G.4 Metal-Clad (Kalamein) Doors. Metal-clad fire doors are of flush or panel design consisting of metal-covered wood cores or stiles and rails and insulated panels covered with steel of 24 gauge or lighter.

G.5 Sheet Metal Doors. Sheet metal fire doors are formed of 22-gauge or lighter steel and are of corrugated, flush sheet, or panel design.

G.6 Rolling Steel Door. A rolling steel fire door consists of a steel curtain that travels using guides and is attached to an overhead barrel. The barrel is enclosed in a hood and is supported by wall-mounted or jamb-mounted brackets. This door type should incorporate an automatic-closing mechanism.

G.7 Tin-Clad Doors. Tin-clad fire doors are of two- or three-ply wooden core construction, covered with 30-gauge galvanized steel or terne plate [maximum size 14 in. × 20 in. (0.36 m × 0.51 m)] or 24-gauge galvanized steel sheets not more than 48 in. (1.22 m) wide. Face sheets should be vented.

G.8 Wood Core–Type Doors. Wood core–type doors consist of wood, hardboard, or plastic face sheets bonded to a wood block or wood particleboard core material with untreated wood edges.

G.9 Special Purpose Doors. See Annex H.

G.10 Classification of Labeled Door Frames.

G.10.1 Single Unit–Type Door Frame.

G.10.1.1 Aluminum. These frames consist of head and jamb members with or without solid transom panels. These frames can consist of one or more units that can be factory or field assembled. They can be designed for erection before or after walls are built.

G.10.1.2 Pressed Steel. These frames consist of head and jamb members with or without solid or glazed transom panels, glazed side lights, solid side panels, transom bars, mullions, or a combination thereof. These frames can consist of one or more units that can be factory or field assembled. They can be designed for erection before or after walls are built.

G.10.1.3 Steel Channel. These frames consist of head and jamb members of structural steel channels, either shop or field assembled, that are to be erected before masonry walls are built. The design and construction are to meet the requirements of 6.3.1.

G.10.1.4 Wood. These frames consist of head and jamb members with or without solid transom panels, glazed side lights, and solid side panels. These frames can consist of one or more units that can be factory or field assembled. They can be designed for erection before or after walls are built.

G.10.2 Two Section–Type Door Frame. These frames consist of a rough buck of either pressed steel or steel channels designed to be erected before masonry walls are built or installed in finished masonry wall openings. The finished head and jamb members are secured to rough bucks. For drywall applications, these frames consist of a two-section hollow metal door frame designed to surround a drywall opening and slide fit, one section into the other, and then anchor to the drywall stud structure to form a completed hollow metal door frame. *(See Figure G.10.2.)*

G.10.3 Multiple-Section Sidelight and Transom Light Frames. These frames consist of multiple hollow metal sections that, upon assembly, form a completed side light, multilight, transom light, or combination, either in the same plane or projected, such as a bay window–type configuration. *(See Figure G.10.3.)*

Copyright 2014 National Fire Protection Association (NFPA). Licensed, by agreement, for individual use and download on October 4, 2014 to LEADER and READER for designated user PATTARAPORN SRITRAKOOL. No other reproduction or transmission in any form permitted without written permission of NFPA. For inquires or to report unauthorized use, contact licensing@nfpa.org.

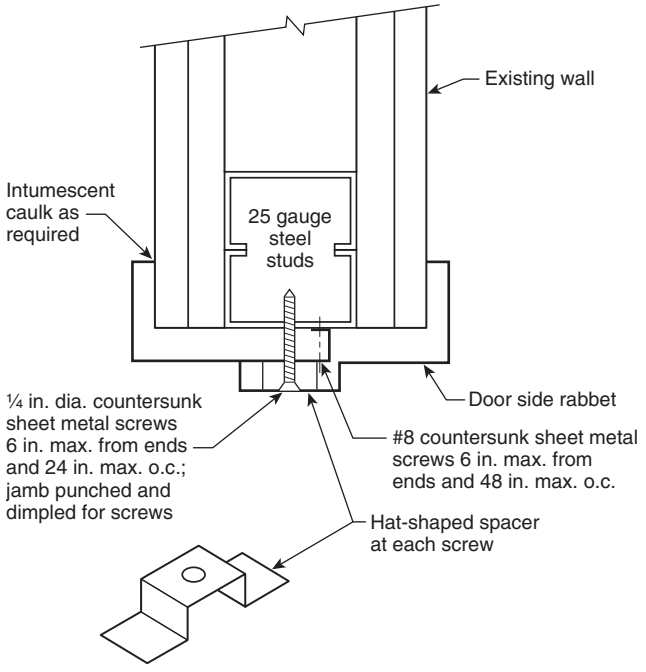

FIGURE G.10.2 Single Swing Two-Section Adjustable Frame Wrapping Existing Drywall Anchor System with 1½-Hour Positive Pressure.

Annex H Special Purpose Doors

This annex is not a part of the requirements of this NFPA document but is included for informational purposes only.

H.1 Acoustical fire doors and frame assemblies are available in single swings and pairs and are furnished complete with sound seals. These doors are tested in accordance with the standard fire test of door assemblies and also with the ASTM E90, *Standard Test Method for Laboratory Measurement of Airborne Sound Transmission Loss of Building Partitions and Elements,* test for airborne sound transmission loss with a Sound Transmission Classification (STC) rating determined by the procedures in ASTM E413, *Classification for Rating Sound Insulation.*

H.2 Security fire doors and frame assemblies are available in two types of security applications. The institutional type is for use in detention and correctional facilities where prevention against escape, unauthorized movement among secure areas, and vandalism by inmates are of primary concern *(see NAAMM/HMMA-863, Guide Specifications for Detention Security Hollow Metal Doors and Frames).* The commercial type is used to protect the rear entrances of commercial establishments, interior secure areas, electric-generating stations, data processing centers, and security control areas of office buildings and other building types, including those impacted by homeland security, where protection of life and assets against unlawful entrance, theft, vandalism, and terror attacks is of primary concern *(see NAAMM/HMMA-862, Guide Specifications for Commercial Security Hollow Metal Doors and Frames).* Security doors are available with bullet-resistant capabilities. These doors are tested in accordance with the standard fire test of door assemblies and additionally might be tested in accordance with UL 752, *Standard for Safety Bullet-Resisting Equipment,* which specifies bullet-resistant ratings for medium-power small arms, high-power small arms, super-power small arms, and high-power rifles. Hardware is provided with the door assembly in the case of doors tested in accordance with ANSI/UL 752.

H.3 Armored attack–resistant fire doors and frame assemblies are available in single swing design. These doors are tested in accordance with the standard fire test of door assemblies. This special type of security door assembly also has ballistic resistance, including resistance to small arms multiple impact threat, armor piercing, and projectiles, and is resistant to attack by tools that can impact the door.

H.4 Radiation-shielding fire doors and frame assemblies are available in single swing and pairs. These doors are tested in accordance with the standard fire test of door assemblies. Doors and frames are lined with lead and are designed to provide shielding against specific types and intensities of radiation.

H.5 Pressure-resistant fire doors and frame assemblies are available in single swing and pairs. These doors are tested in accordance with the standard fire test of door assemblies. These doors also are designed to resist blasts from explosions, wind forces, and pressure differences between spaces.

H.6 Stainless steel fire doors and frame assemblies are available for applications that range from the high aesthetic and decorative to low aesthetics and high corrosion resistance. Typical applications for high aesthetics are interior designs in high-profile office buildings, art centers, hotels, and embassies, whereas examples of high-corrosion-resistance applications are interior or exterior openings in water treatment plants, food processing plants, and public swimming pools. *(See NAAMM/HMMA 866, Guide Specifications for Stainless Steel Hollow Metal Doors and Frames.)*

Annex I Radiant Heat Transfer

This annex is not a part of the requirements of this NFPA document but is included for informational purposes only.

I.1 Background. Fire windows were originally designed for protecting openings in exterior walls. In such applications, radiant heat transfer was not a significant consideration, since the main function of fire windows was to contain the flames within the building. However, where fire windows are used in interior partitions, users of this standard might need to consider radiant heat transfer during fire. Exiting through corridors and past fire windows could be compromised, and combustible materials on the unexposed side of fire windows could be ignited. The information that follows is a guide to the evaluation of radiant heat transfer through fire windows.

Recent revisions to this standard have permitted very large areas of fire protection–rated glazing materials to be used in interior partitions, limited only by the size of the test furnace. Also, recent technological advances in the glazing industry have compounded the problem of radiant heat transfer by making it possible to provide glazing materials with fire protection ratings of 60 minutes and 90 minutes. Historically, fire windows, including glass block, have been limited to a 45-minute rating by the standard fire test, NFPA 257, *Standard on Fire Test for Window and Glass Block Assemblies.* This time limit was predicated on the failure of wired glass at approximately 1600°F (870°C). [1] Some manufacturers also have developed fire resistance–rated glazing assemblies that meet the requirements of a fire resistance–rated wall assembly (currently up to 2 hours). These glazing materials, however, do not transmit excessive radiant heat, since they are re-

Copyright 2014 National Fire Protection Association (NFPA). Licensed, by agreement, for individual use and download on October 4, 2014 to LEADER and READER for designated user PATTARAPORN SRITRAKOOL. No other reproduction or transmission in any form permitted without written permission of NFPA. For inquires or to report unauthorized use, contact licensing@nfpa.org.

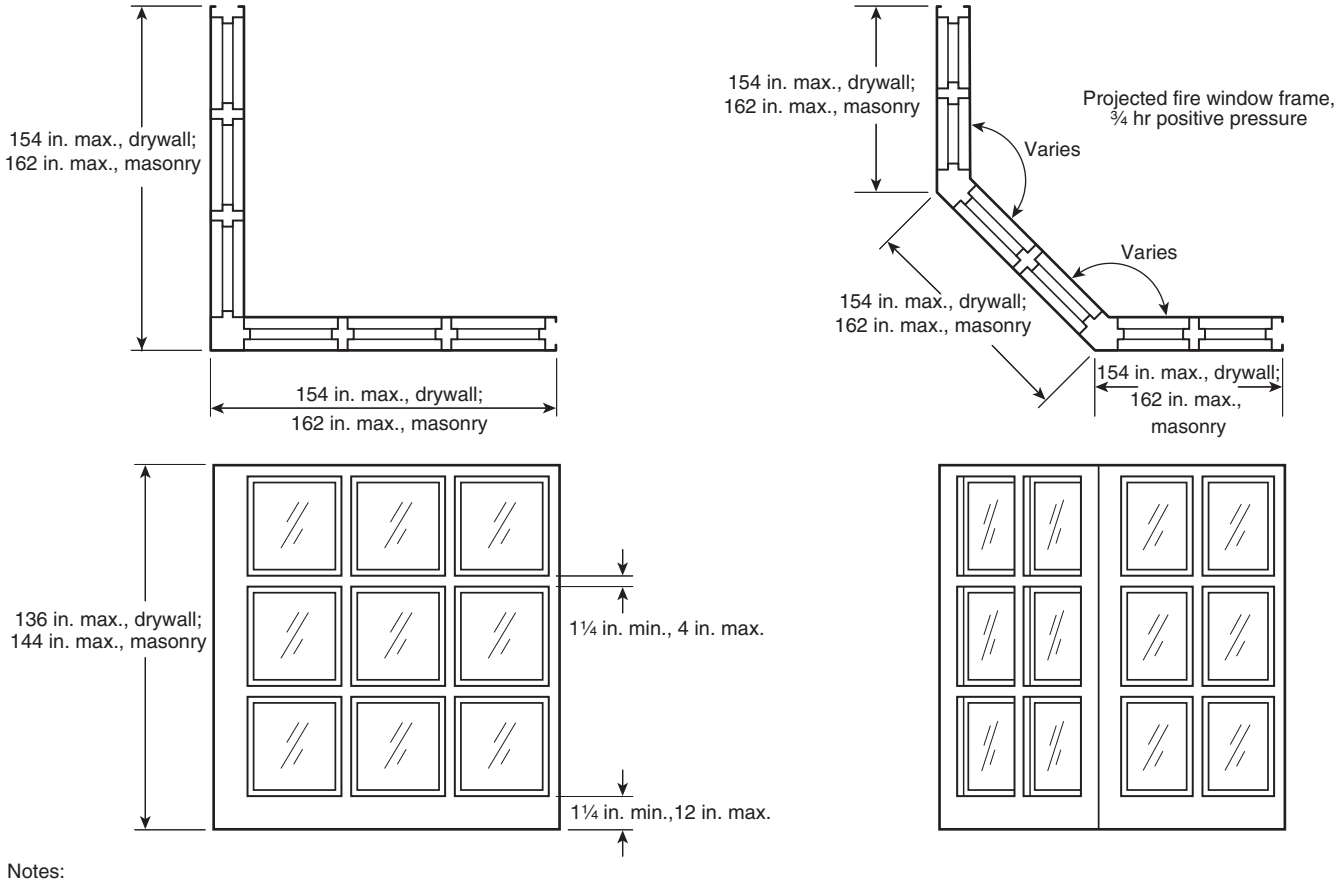

Notes:
1. The projected window frame can include a door frame that is part of a fire-rated door assembly having a minimum ¾ hr rating.
2. Inside angle between frame segments can vary. Frame curvature can be continuous or segmented.
3. For SI conversion, 1 in. = 25.4 mm.

FIGURE G.10.3 Projected Window Frame.

quired to limit the temperature rise on the unexposed face to 250°F (121°C).

Test Method. Because the present fire test standard, NFPA 257, does not require measuring and reporting temperature rise on the unexposed face of the glazing material or radiant heat transmission, glazing products tested to this standard have not been required to retard heat transfer. However, these data are required in many European fire test standards. [2] As a result, European building codes place limitations on the use of glazing in fire-resistant partitions inside buildings and require the use of insulating glazing in means of egress as well as where combustibles could be in close proximity. Research by Margaret Law, Bsc., Ministry of Technology and Fire Offices Committee, Joint Fire Research Organization, led to the development of such limitations in British building regulations. [3,4] This research provides a methodology for calculating safe distances from wired glass windows used to screen room fires from adjacent spaces.

Law's research properly identifies two major concerns for the use of fire protection–rated glazing in interior partitions as follows:

(1) The impact on occupants exiting past the glazing
(2) The potential for nonpiloted (auto)ignition of combustibles on the unexposed side of the glazing

Both of these concerns should be taken into consideration by users of this standard when evaluating a specific fire protection–rated glazing material for interior application.

The exiting concern relates mostly to corridor applications where evacuating occupants might pass directly in front of the glazing that screens them from fire. Calculation methods described in references 1 and 5 can be used to determine the radiant heat flux generated by a fire as well as the incident heat flux on a person located any distance beyond the unexposed face of the glazing. Safe distances for evacuees then can be determined from Figures 3-10.59 and 3-10.60 in the *SFPE Handbook of Fire Protection Engineering*, which provide data useful in estimating the time to reach pain threshold and the time taken to cause second-degree burns. [5]

Exit Enclosures. Traditional glazing materials have been prohibited from being used in fire windows in exit stair enclosures because of the concern of radiant heat transfer. Recently, the model building codes also incorporated requirements for limiting the temperature rise on the unexposed face of fire doors opening into exit stair enclosures in order to address the problem of heat transfer (both conducted and reradiated) that could expose evacuating occupants passing doors at each floor landing. Therefore, caution should be exercised when considering glazing materials with fire protection ratings of

Copyright 2014 National Fire Protection Association (NFPA). Licensed, by agreement, for individual use and download on October 4, 2014 to LEADER and READER for designated user PATTARAPORN SRITRAKOOL. No other reproduction or transmission in any form permitted without written permission of NFPA. For inquires or to report unauthorized use, contact licensing@nfpa.org.

1 hour or more in such applications, since they can transmit excessive radiant heat into the exit stair enclosure. However, glazing materials with fire resistance ratings are suitable in such situations, since they have been tested to limit heat transfer.

Irradiation Levels. Addressing the problem of the nonpiloted (auto)ignition of combustibles stored near a fire window demands an understanding of critical irradiation levels. Incident flux levels for autoignition of various combustible materials have been developed. [3,6] Average values of 30 kW/m^2 to 35 kW/m^2 normally are used for ordinary (cellulosic) combustibles. Lower values have been identified for some synthetic materials.

The radiant intensity (heat flux) of the exposing fire depends on, among other factors, the type of materials burning (rate of heat release) and the ventilation rate of the enclosing room. For well-ventilated fires in light hazard occupancies, such as offices, schools, institutions, and residences, a peak radiation intensity (output) of 85 kW/m^2 has been used by Law to represent a 1-hour fire exposure. [3] Nelson provides a method for determining safe separation distances based on the radiant heat flux incident on a combustible material screened by wired glass (with a transmissivity of 0.5) from a fire (with an emissivity of 1.0; called a blackbody). [6] In general, a fully developed compartment fire is viewed as a blackbody and, therefore, is assigned an emissivity of 1.0. To determine the radiation intensity, the following formula can be used:

$$I = eoT^4$$

where:
I = radiation intensity (kW/m^2)
e = emissivity
o = Stefan–Boltzmann constant (5.67×10^{-11} kW/m^2-K^4)
T = absolute temperature of the fire (K)

For most situations, the temperature of the compartment fire is the only unknown variable. *NFPA 72, National Fire Alarm and Signaling Code*, provides some guidance for calculating room temperature based on different fire growth rates. Other methods base the temperature on the standard temperature–time curve used in ASTM E119, *Standard Test Methods for Fire Tests of Building Construction and Materials*. In a fully developed compartment fire assumed to have a temperature of 1600°F (870°C or 1140 K), the radiant heat flux would be approximately 105 kW/m^2.

To determine the incident radiant heat flux on the unexposed side of the glazing, the following formula can be used:

$$I_i = FtI$$

where:
I_i = incident radiation intensity (heat flux) (kW/m^2)
F = configuration factor for the glazed opening
t = transmissivity of the glazing material
I = radiation intensity of the fire (kW/m^2)

Transmissivity of ¼ in. (6.35 mm) wired glass has been reported in the range of 0.4 to 0.6. Many analyses have used 0.5 transmissivity to account for the effects of reradiation by the glazing product. Some manufacturers might be able to provide specific heat transfer information relative to their products.

Users should consider the significance of the source radiation, the transmissivity of the glazing material, the time of exposure, the separation distances, and the configuration of the glazed opening in relation to the target.

Continuing with the earlier example of a fire having a temperature of 1600°F (870°C), the incident radiation intensity (heat flux) (I_i) for a window opening having a configuration factor of 0.35 in relation to a combustible target would be approximately 18.4 kW/m^2. The referenced documents provide detailed guidance for this analysis.

I.2 References.

(1) National Fire Protection Association, *Fire Protection Handbook*, 20th ed., 2008, Section 18, Chap 1, "Confinement of Fire in Buildings," pp. 18–15 to 18–20, "Protection of Openings."
(2) ISO 3009, *Fire Resistance Tests — Glazed Elements*, International Organization for Standardization, 1976, Amendment 1: 1984.
(3) Law, Margaret, "Safe Distances from Wired Glass Screening a Fire," *Institution of Fire Engineers Quarterly*, London, 1969.
(4) Law, Margaret, "Heat Radiation from Fires and Building Separation," Fire Research Technical Paper No. 5, London, 1963.
(5) Society of Fire Protection Engineers, *SFPE Handbook of Fire Protection Engineering*, 4th ed., 2008, "Thermal Radiation Hazards," pp. 3-313 to 3-315.
(6) Nelson, Harold E., "Radiant Energy Transfer in Fire Protection Engineering Problem Solving," *Fire Technology*, Vol. 4, No. 3, August 1968, pp. 196–205.

Annex J Performance-Based Option for the Inspection, Testing, and Maintenance of Fire Door Assemblies

This annex is not a part of the requirements of this NFPA document but is included for informational purposes only.

J.1 This annex provides the option to adopt a performance-based method as an alternative means of compliance for Section 5.2. Equivalent levels of performance can be demonstrated through quantitative performance-based analyses. This annex provides a basis for implementing a performance-based program acceptable under this option (provided that approval is obtained by the AHJ).

J.2 The concept of a performance-based program is to establish the type and frequency of inspection to demonstrate that the assembly is operational. The goal is to balance the inspection frequency with proven reliability of the assembly. The goal of a performance-based inspection program is also to adjust test and inspection frequencies commensurate with historical documented equipment performance and desired reliability. Frequencies of tests and inspections under a performance-based program can be extended or reduced from the once-per-year test requirement in 5.2.4 when continued testing of door assemblies in 5.2.3, 5.2.3.5, or 5.2.3.6, as applicable, has been documented, indicating a higher or lower degree of reliability compared with the AHJ's and the owner's expectations of performance. Additional program attributes that should be considered in the adjustment of test and inspection frequencies include the following:

(1) Door maintenance programs
(2) Door usage frequencies
(3) History of door repairs
(4) Building condition
(5) Consequence of failure

J.3 Fundamental to implementing a performance-based program is that adjusted test and inspection frequencies should be technically defensible to the AHJ and supported by evi-

Copyright 2014 National Fire Protection Association (NFPA). Licensed, by agreement, for individual use and download on October 4, 2014 to LEADER and READER for designated user PATTARAPORN SRITRAKOOL. No other reproduction or transmission in any form permitted without written permission of NFPA. For inquires or to report unauthorized use, contact licensing@nfpa.org.

dence of higher or lower reliability. Data collection and retention should be established so that the data utilized to alter frequencies are representative, statistically valid, and evaluated against firm criteria. Frequencies cannot be arbitrarily extended or reduced without suitable rationale.

J.4 It must be noted that transitioning to a performance-based program requires an expenditure of resources in order to collect and analyze failure data, coordinate review efforts, change program documents, and seek approval from the AHJ. The following factors should be considered in determining whether a transition to a performance-based test program as permitted in Section 5.4 is warranted:

(1) *Past door reliability.* Have problems routinely been identified during the prescriptive test requirements of Section 5.2, or have doors consistently performed with minimal discrepancies noted?
(2) *Resource expenditures.* Do the recurring resource expenditures necessary to implement the prescriptive test requirements in Section 5.2 justify the consideration of conducting the detailed analyses needed to support a performance-based testing program?
(3) *Administrative burden.* Is there an increase to the administrative burden for implementing, documenting, and monitoring a performance-based program?

J.5 A performance-based program requires that a maximum allowable failure rate be established and approved by the AHJ in advance of implementation. The use of historical fire door inspection records can be utilized to determine failure rates. One method of calculating the failure rate of fire door assemblies is based on the following equation:

$$FDFR(t) = \frac{NF}{NC \times t}$$

where:
$FDFR(t)$ = fire door failure rate (failures per year)
NF = number of failures
NC = total number of fire door assemblies inspected or tested
t = time interval of review in years

J.6 Example. Data are collected for 50 fire doors over a 5-year period. The testing is conducted annually as described in 5.2.4. A review of the data identifies five failures: total components, 50; data collection period, 5 years; total failures, 5.

$$FDFR = \frac{5}{50 \times 5} = 0.020 \text{ per year}$$

J.7 A fundamental requirement of a performance-based program is the continual monitoring of the door component failure rates and determining if they exceed the maximum allowable failure rates as agreed on with the AHJ. The process used to complete this review should be documented and repeatable.

J.8 Coupled with the ongoing review is a requirement for a formalized method of increasing or decreasing the frequency of testing and inspection when the door assemblies exhibit either a higher than expected failure rate or an increase in reliability as a result of a decrease in failures.

J.9 A formal process for reviewing the failure rates and increasing or decreasing the frequency of testing should be well documented. The frequency required for future tests can be reduced to the next inspection frequency and maintained there for a period equaling the initial data review or until the ongoing review indicates that the failure rate is no longer being exceeded.

J.10 Increases and decreases in inspection frequency should be initiated on a step approach such that increments do not exceed 50 percent of the required frequency in 5.2.4, that is, 6 months for any given period under consideration. An example would be going from annual to semiannual testing when the failure rate exceeds the AHJ's expectations or from annual testing to testing every 18 months when the failure trend indicates an increase in reliability. The maximum time period between inspections regardless of performance should not exceed 36 months. Changes in occupancy, facility management, or ownership that could result in changes in performance should be reassessed by the AHJ to determine if continued acceptability of a performance-based inspection program is warranted.

Annex K General Information About Fire Doors

This annex is not a part of the requirements of this NFPA document but is included for informational purposes only.

K.1 Where fire doors are used in a means of egress, NFPA *101*, *Life Safety Code*, specifies that they are required to swing with the exit travel, except for doors on individual small rooms, which can be permitted to swing in; and that for horizontal exits, where fire doors are required on both sides of the wall, one door can be permitted to be an automatic horizontally sliding door, normally open, and the other door can be permitted to be a self-closing door that swings with the exit travel, normally closed. The following types of doors might not be permitted to be used on exits:

(1) Rolling steel doors or shutters
(2) Vertical sliding doors
(3) Jackknife doors

K.2 NFPA 80A, *Recommended Practice for Protection of Buildings from Exterior Fire Exposures*, provides detailed guidance in determination of the fire exposure severity and the corresponding degree of protection of the opening that is warranted.

Swinging doors that are integral with the sliding fire doors are considered suitable if they are tested and listed and if they are furnished without any obstruction to clear passage.

K.3 Structural requirements specified in this standard generally refer to materials and assemblies that, through field experience, have been found acceptable for such application. Walls and lintels, provided they are of fire-rated construction, should provide the support required for the type of door to be installed. Materials and structural designs other than those specifically covered herein can be permitted to be employed if judged equivalent by the AHJ.

K.4 Despite the provision of protection specified in this standard, walls with openings have less fire resistance than unpierced walls. Fire doors, shutters, and fire windows are designed to protect an opening under normal conditions of use, with a clear space on both sides of the opening. Where the opening is not used and combustible material is piled against the door, window, or shutter, the designed protection cannot be expected. For that reason, combustible material should be kept well away from openings. Where a door or window opening is no longer in use, the opening should be closed, with construction having a fire resistance rating equivalent to that of the wall.

Copyright 2014 National Fire Protection Association (NFPA). Licensed, by agreement, for individual use and download on October 4, 2014 to LEADER and READER for designated user PATTARAPORN SRITRAKOOL. No other reproduction or transmission in any form permitted without written permission of NFPA. For inquires or to report unauthorized use, contact licensing@nfpa.org.

K.5 Any assembly provided in accordance with the provisions of this standard does not necessarily provide the same degree of protection against the spread of fire that is provided by the wall in which the assembly is installed, assuming that the wall has fire resistance established in accordance with ASTM E119, *Standard Test Methods for Fire Tests of Building Construction and Materials*. Therefore, the size and number of openings in any wall required to have fire resistance should be kept to the minimum necessary for the normal or emergency operation of the occupancy. The use of assemblies covered in this standard in fire-resistive walls only for decorative, aesthetic, and similar purposes is not recommended. However, there are glazing systems using fire-resistant glazing materials that are actually fire-resistive walls tested in accordance with ASTM E119. Such systems can be permitted to be used as fire-resistive walls and are not within the scope of this standard.

There are developments in the area of glazing that demonstrate a resistance to the passage of heat beyond that discussed in Annex I. Historically, the fire protection performance of glazing has been based on wired glass, which is capable of successfully meeting the fire exposure test criteria of NFPA 257, *Standard on Fire Test for Window and Glass Block Assemblies*, and which has been accepted as having a fire protection rating of 45 minutes. The fire protection–rated glazing materials are now capable of meeting the fire test criteria of NFPA 257 for as long as 3 hours, and some have a low radiant heat transfer capability for as long as 1 hour and 1½ hours. Safety glazing is also an important consideration where glazing materials are used in fire doors and in fire resistance–rated walls that could be subject to accidental human impact. In such applications, all model building codes contain requirements for safety glazing based on 16 CFR 1201, U.S. Consumer Product Safety Commission, "Standard for Architectural Glazing."

K.6 Fire doors, shutters, or fire windows are of value only if properly maintained so that they close or are closed at the time of fire. Periodic inspection of doors, shutters, and fire windows, with immediate attention to any necessary repairs and correction of any defects that could interfere with operation, is an important responsibility of the management of the property. *(See Chapter 5.)*

K.7 The use of swinging, nonrated doors mounted in openings in fire walls, which could interfere with the closing of the fire doors, should not be permitted.

Annex L Informational References

L.1 Referenced Publications. The documents or portions thereof listed in this annex are referenced within the informational sections of this standard and are not part of the requirements of this document unless also listed in Chapter 2 for other reasons.

L.1.1 NFPA Publications. National Fire Protection Association, 1 Batterymarch Park, Quincy, MA 02169-7471.

NFPA 72®, National Fire Alarm and Signaling Code, 2013 edition.

NFPA 80A, *Recommended Practice for Protection of Buildings from Exterior Fire Exposures*, 2012 edition.

NFPA 82, *Standard on Incinerators and Waste and Linen Handling Systems and Equipment*, 2009 edition.

NFPA *101®, Life Safety Code®*, 2012 edition.

NFPA 105, *Standard for Smoke Door Assemblies and Other Opening Protectives*, 2013 edition.

NFPA 232, *Standard for the Protection of Records*, 2012 edition.

NFPA 252, *Standard Methods of Fire Tests of Door Assemblies*, 2012 edition.

NFPA 257, *Standard on Fire Test for Window and Glass Block Assemblies*, 2012 edition.

NFPA 288, *Standard Methods of Fire Tests of Horizontal Fire Door Assemblies Installed in Horizontal Fire Resistance–Rated Assemblies*, 2012 edition.

Fire Protection Handbook, 20th ed., 2008, Section 18, Chap 1, "Confinement of Fire in Buildings," pp. 18–15 to 18–20, "Protection of Openings."

SFPE Handbook of Fire Protection Engineering, 4th edition, 2008.

L.1.2 Other Publications.

L.1.2.1 AMCA Publications. Air Movement and Control Association International, Inc., 30 West University Drive, Arlington Heights, IL 60004-1893.

AMCA 503, *Fire, Ceiling (Radiation), Smoke and Fire/Smoke Dampers Application Manual,* 2008.

L.1.2.2 ASME Publications. American Society of Mechanical Engineers, Three Park Avenue, New York, NY 10016-5990.

ASME A17.1/CSA B44, *Handbook on Safety Code for Elevators and Escalators,* 2007.

ASME A17.1/CSA B44, *Safety Code for Elevators and Escalators,* 2007.

L.1.2.3 ASTM Publications. ASTM International, 100 Barr Harbor Drive, P.O. Box C700, West Conshohocken, PA 19428-2959.

ASTM D5034, *Standard Test Method for Breaking Strength and Elongation of Textile Fabrics (Grab Test)*, 2001.

ASTM E90, *Standard Test Method for Laboratory Measurement of Airborne Sound Transmission Loss of Building Partitions and Elements,* 2004.

ASTM E119, *Standard Test Methods for Fire Tests of Building Construction and Materials*, 2011.

ASTM E413, *Classification for Rating Sound Insulation,* 2004.

L.1.2.4 ISO Publications. International Organization for Standardization, 1, Ch. de la Voie-Creuse, Case postale 56, CH-1211 Geneva 20, Switzerland.

ISO 3009, *Fire Resistance Tests — Glazed Elements,* 1976/Amendment 1:1984.

L.1.2.5 NAAMM/HMMA Publications. National Association of Architectural Metal Manufacturers/Hollow Metal Manufacturers Association, 8 South Michigan Avenue, Suite 1000, Chicago, IL 60603.

NAAMM/HMMA-862, *Guide Specifications for Commercial Security Hollow Metal Doors and Frames,* 2003.

NAAMM/HMMA-863, *Guide Specifications for Detention Security Hollow Metal Doors and Frames*, 5th ed., 2005.

NAAMM/HMMA-866, *Guide Specifications for Stainless Steel Hollow Metal Doors and Frames*, 2001.

L.1.2.6 SMACNA Publications. Sheet Metal and Air Conditioning Contractors' National Association, 4201 Lafayette Center Drive, Chantilly, VA 20151-1209.

Fire, Smoke and Radiation Damper Installation Guide for HVAC Systems, 2002.

Copyright 2014 National Fire Protection Association (NFPA). Licensed, by agreement, for individual use and download on October 4, 2014 to LEADER and READER for designated user PATTARAPORN SRITRAKOOL. No other reproduction or transmission in any form permitted without written permission of NFPA. For inquires or to report unauthorized use, contact licensing@nfpa.org.

L.1.2.7 UL Publications. Underwriters Laboratories Inc., 333 Pfingsten Road, Northbrook, IL 60062-2096.

ANSI/UL 9, *Standard for Safety Fire Tests of Window Assemblies*, 2004, Revised April 2009.

ANSI/UL 10B, *Standard for Safety Fire Tests of Door Assemblies,* 2008, Revised 2009.

ANSI/UL 10C, *Standard for Positive Pressure Fire Tests of Door Assemblies,* 2009.

UL 752, *Standard for Safety Bullet-Resisting Equipment,* 2005, Revised 2010.

Fire Resistance Directory, 2010.

L.1.2.8 ULC Publications. ULC Standards, 7 Underwriters Road, Toronto, ON, M1R 3A9, Canada.

CAN/ULC-S104-10, *Standard Method for Fire Tests of Door Assemblies,* 2010.

CAN4-S106-M80, *Standard Method for Fire Test of Window and Glass Block Assemblies,* 1980.

L.1.2.9 U.S. Government Publications. U.S. Government Printing Office, Washington, DC 20402.

Title 16, Code of Federal Regulations, Part 1201, "Standard for Architectural Glazing," January 6, 1977.

L.1.2.10 Additional Publications. Law, Margaret, "Heat Radiation from Fires and Building Separation," Fire Research Technical Paper No. 5, London, 1963.

Law, Margaret, "Safe Distances from Wired Glass Screening a Fire," *Institution of Fire Engineers Quarterly,* London, 1969.

Nelson, Harold E., "Radiant Energy Transfer in Fire Protection Engineering Problem Solving," *Fire Technology*, Vol. 4, No. 3, August 1968, pp. 196–205.

L.2 Informational References. The following documents or portions thereof are listed here as informational resources only. They are not a part of the requirements of this document.

L.2.1 ANSI Publications. American National Standards Institute, Inc., 25 West 43rd Street, 4th Floor, New York, NY 10036.

ANSI A133.1, *Tin-Clad Fire Doors Mounted Singly and in Pairs,* 1993.

ANSI Z97.1, *Safety Performance Specifications and Methods of Test for Safety Glazing Materials Used in Buildings,* 2004.

L.3 References for Extracts in Informational Sections. (Reserved)

Copyright 2014 National Fire Protection Association (NFPA). Licensed, by agreement, for individual use and download on October 4, 2014 to LEADER and READER for designated user PATTARAPORN SRITRAKOOL. No other reproduction or transmission in any form permitted without written permission of NFPA. For inquires or to report unauthorized use, contact licensing@nfpa.org.

Index

Copyright © 2012 National Fire Protection Association. All Rights Reserved.

The copyright in this index is separate and distinct from the copyright in the document that it indexes. The licensing provisions set forth for the document are not applicable to this index. This index may not be reproduced in whole or in part by any means without the express written permission of NFPA.

-A-

Access Door
Definition ... 3.3.1
Horizontal Access Door
Definition ... 3.3.1.1
Vertical Access Door
Definition ... 3.3.1.2
Access Doors ... Chap. 16
Doors ... 16.1
Components ... 16.1.2
General ... 16.1.1
Types of Doors ... 16.2
Floor Fire Door Assemblies ... 16.2.3
Horizontal Access Doors ... 16.2.1
Vertical Access Doors ... 16.2.2
Active Leaf
Definition ... 3.3.2
Administration ... Chap. 1
Equivalency ... 1.4
Purpose ... 1.2
Retroactivity ... 1.3, A.1.3
Scope ... 1.1, A.1.1
Ambient
Definition ... 3.3.3
Anchor
Definition ... 3.3.4
Approved
Definition ... 3.2.1, A.3.2.1
Astragal
Definition ... 3.3.5, A.3.3.5
Overlapping Astragal
Definition ... 3.3.5.1
Split Astragal
Definition ... 3.3.5.2, A.3.3.5.2
Authority Having Jurisdiction (AHJ)
Definition ... 3.2.2, A.3.2.2
Automatic Fire Detector
Definition ... 3.3.8
Automatic Louver
Definition ... 3.3.9
Automatic Top and Bottom Bolts
Definition ... 3.3.10
Automatic-Closing Device
Definition ... 3.3.6
Automatic-Closing Door
Definition ... 3.3.7, A.3.3.7

-B-

Barrel
Definition ... 3.3.11
Batten
Definition ... 3.3.12
Binders
Definition ... 3.3.13
Biparting
Definition ... 3.3.14
Bottom Bar (Rolling Steel Door)
Definition ... 3.3.15
Breakaway Connection
Definition ... 3.3.16
Bumper (Fire Safety Curtain)
Definition ... 3.3.17
Bumpers
Definition ... 3.3.18

-C-

Care and Maintenance ... Chap. 5
General ... 5.1, A.5.1
Application ... 5.1.1
Field Modifications ... 5.1.4
Operability ... 5.1.2
Removal of Door or Window ... 5.1.5
Replacement ... 5.1.3
Inspection and Testing ... 5.2, A.5.2
Acceptance Testing ... 5.2.3
Closing Devices ... 5.2.3.7
Rolling Steel Fire Doors ... 5.2.3.7.3
Horizontally Sliding, Vertically Sliding, and Rolling Doors ... 5.2.3.6
Swinging Doors with Builders Hardware or Fire Door Hardware ... 5.2.3.5
Periodic Inspection and Testing ... 5.2.4
Maintenance ... 5.5
Performance-Based Option ... 5.4, A.5.4
Retrofit Operators ... 5.3
Ceiling Radiation Damper
Definition ... 3.3.19
Center Latch
Definition ... 3.3.20
Center Parting
Definition ... 3.3.21
Chafing Strip
Definition ... 3.3.22
Channel Frame
Definition ... 3.3.23
Chute Doors ... Chap. 15
Doors ... 15.1
Fire Protection Rating ... 15.1.2, A.15.1.2
Operation ... 15.1.1
Classified
Definition ... 3.3.24, A.3.3.24
Closed Position (Rolling Steel Fire Door)
Definition ... 3.3.25
Closing Device
Definition ... 3.3.26
Combination Fire/Smoke Damper
Definition ... 3.3.27
Concrete Lintel
Definition ... 3.3.28
Continuous Glazing Molding
Definition ... 3.3.29
Coordinator
Definition ... 3.3.30
Counterbalancing
Definition ... 3.3.31
Cover Plate
Definition ... 3.3.32
Crush Plates
Definition ... 3.3.33
Curtain (Rolling Steel Fire Door)
Definition ... 3.3.34
Curtain Slats
Definition ... 3.3.35

Copyright 2014 National Fire Protection Association (NFPA). Licensed, by agreement, for individual use and download on October 4, 2014 to LEADER and READER for designated user PATTARAPORN SRITRAKOOL. No other reproduction or transmission in any form permitted without written permission of NFPA. For inquires or to report unauthorized use, contact licensing@nfpa.org.

-D-

Definitions ..... Chap. 3
Detector
Definition 3.3.36
Door
Access Door
Definition 3.3.37.1
Automatic-Closing Door
Definition 3.3.37.2
Definition 3.3.37
Power-Operated Fire Door
Definition 3.3.37.3
Self-Closing Door
Definition 3.3.37.4
Service Counter Fire Door
Definition 3.3.37.5
Door Closer (Swinging)
Definition 3.3.38
Door Hardware Locations ..... Annex F
Door Holder/Release Device
Definition 3.3.39
Door Protection Plate
Definition 3.3.40
Double Egress Doors
Definition 3.3.41, A.3.3.41
Dutch Door
Definition 3.3.42
Dynamic System
Definition 3.3.43

-E-

Egress Side
Definition 3.3.44
Explanatory Material ..... Annex A

-F-

Fabric Fire Safety Curtains ..... Chap. 20
Acceptance Testing 20.8
Care and Maintenance 20.9
Fabric Fire Safety Curtain Components 20.2
Bumper (Yield Pad) 20.2.3
Fire Safety Curtain Fabric and Testing 20.2.1
Fire Safety Curtain Labels 20.2.2
Fire Safety Curtain Assemblies 20.4
Brail Fire Safety Curtain Assembly 20.4.5
Edge Reinforcement 20.4.2
Framed Fire Safety Curtain Assembly 20.4.3
Guides 20.4.1
Cable Guides 20.4.1.1
Knife Guides 20.4.1.3
Roller Guides 20.4.1.2
Unframed Fire Safety Curtain Assembly 20.4.4
Guide Systems 20.4.4.1
General 20.1
Assembly Installer 20.1.4
Definitions 20.1.5
Batten 20.1.5.1
Bumper (Fire Safety Curtain) 20.1.5.2
Fire Safety Curtain 20.1.5.3
Brail Fire Safety Curtain 20.1.5.3.1
Straight-Lift Fire Safety Curtain 20.1.5.3.2
Unframed Fire Safety Curtain 20.1.5.3.3
Fire Safety Curtain Assembly 20.1.5.4
Framed Fire Safety Curtain Assembly 20.1.5.4.1
Proscenium Wall 20.1.5.5
Purchase Line (Hand Line) 20.1.5.6
Roller Guide/Metal Track Side Edge Guide System 20.1.5.7
Side Guide Cable System 20.1.5.8
Stay Chain 20.1.5.9
Vertical Guide Pocket 20.1.5.10
Fire Safety Curtain Assembly Designer 20.1.3
Installation 20.3
Operation of the Fire Safety Curtain Assembly 20.7
Emergency Operation 20.7.3
General 20.7.1
Nonemergency Operation 20.7.2
Rigging and Lifting Equipment 20.6
Battens 20.6.6
Controls 20.6.10
Counterweight Arbor Assemblies and Track 20.6.8
Stay Chains 20.6.7
Vertical Guide Pocket 20.6.5
Winches 20.6.9
Supporting Construction 20.5
Fail-Safe Device
Definition 3.3.45
Field Modifications
Definition 3.3.46, A.3.3.46
Finish Frame
Definition 3.3.47
Fire Damper
Definition 3.3.48
Fire Door
Definition 3.3.49, A.3.3.49
Fire Door and Fire Window Classifications ..... Annex D
Fire Door Assembly
Definition 3.3.50
Fire Door Frame
Definition 3.3.51
Fire Door Frame for Lights
Definition 3.3.52, A.3.3.52
Fire Door Frame for Panels
Definition 3.3.53, A.3.3.53
Fire Door Hardware
Definition 3.3.54
Fire Doors: Protection of Conveyor Openings ..... Annex B
Fire Exit Hardware
Definition 3.3.55
Fire Protection Glazing
Definition 3.3.56, A.3.3.56
Fire Protection Rating
Definition 3.3.57
Fire Resistance Glazing
Definition 3.3.59
Fire Resistance Rating
Definition 3.3.60
Fire Safety Curtain
Brail Fire Safety Curtain
Definition 3.3.61.1
Definition 3.3.61
Straight-Lift Fire Safety Curtain
Definition 3.3.61.2
Unframed Fire Safety Curtain
Definition 3.3.61.3
Fire Safety Curtain Assembly
Definition 3.3.62
Framed Fire Safety Curtain Assembly
Definition 3.3.62.1
Fire Shutter
Definition 3.3.63
Fire Shutters ..... Chap. 12
Requirements 12.2
Types 12.1
Weather Protection 12.3, A.12.3
Fire Window Assembly
Definition 3.3.64
Fire Windows ..... Chap. 17
Closing Devices 17.5
Glazing Material 17.2
Identification 17.2.3
Labeled 17.2.1, A.17.2.1
Safety 17.2.4

Copyright 2014 National Fire Protection Association (NFPA). Licensed, by agreement, for individual use and download on October 4, 2014 to LEADER and READER for designated user PATTARAPORN SRITRAKOOL. No other reproduction or transmission in any form permitted without written permission of NFPA. For inquires or to report unauthorized use, contact licensing@nfpa.org.

Size 17.2.2, A.17.2.2
Installation 17.4
Fire Lock Angles 17.4.2
Frames 17.4.1
Glazing Material 17.4.3
Types of Windows 17.3
Fire Window Applications 17.3.1
Partitions 17.3.1.1
Hollow Metal–Framed Windows 17.3.2
Hollow Metal Plate Steel (Combination) Windows 17.3.4
Hot-Rolled or Extruded Steel Section Windows 17.3.3
Maximum Openings for Hot-Rolled or Extruded Steel Section Windows 17.3.3.5
Heavy Intermediate and Industrial Types 17.3.3.5.1
Residential Types 17.3.3.5.3
Standard Intermediate Types 17.3.3.5.2
Windows 17.1
Fire Window Frames 17.1.3, A.17.1.3
General 17.1.1
Testing 17.1.2
Fire-Rated Damper Mullion
Definition 3.3.58
Flame Baffle
Definition 3.3.65
Floor Fire Door Assembly
Definition 3.3.66
Flush Bolts
Automatic Flush Bolts
Definition 3.3.67.1
Definition 3.3.67
Manual Flush Bolts
Definition 3.3.67.2
Follow-Up Inspection Procedure
Definition 3.3.68
Fusible Link
Definition 3.3.69

-G-

General Information About Fire Doors ..... Annex K
General Requirements ..... Chap. 4
Classification of Hardware for Fire Doors 4.6
Classifications and Types of Doors 4.3
Fire Resistance–Rated Glazing in Doors and Windows 4.5
General Limitations 4.1
Appurtenances 4.1.3
Classification 4.1.1
Fusible Links 4.1.2, A.4.1.2
Signage 4.1.4
Means of Attachment 4.1.4.2
Sliding Doors 4.1.5
Glazing Material in Fire Doors 4.4
Listed and Labeled Products 4.2
Components 4.2.5
Placement of Detectors 4.7
Supporting Construction 4.8
Clearance 4.8.4
Floor Coverings 4.8.5
Lintels 4.8.3
Sills 4.8.2
Rolling Steel Fire Doors 4.8.2.10
Walls 4.8.1
Glass Block Assemblies ..... Chap. 18
General 18.1
Labeled 18.1.2
Size 18.1.3
Testing 18.1.1, A.18.1.1
Installation 18.2
Glazing Angle Clips
Definition 3.3.70, A.3.3.70
Governor (Sliding, Vertical, and Rolling Steel Fire Doors)
Definition 3.3.71
Guide (Rolling Doors)
Definition 3.3.72
Guide Rail (Sliding Door, Vertical)
Definition 3.3.73
Guide Shoe (Sliding Door, Vertical)
Definition 3.3.74
Guide Wall Angle (Rolling Steel Doors)
Definition 3.3.75

-H-

Hanger (Sliding Door, Horizontal)
Definition 3.3.76
Heat-Actuated Device
Definition 3.3.77
Hoistway Doors for Elevators and Dumbwaiters ..... Chap. 14
Door Operation 14.4
Doors 14.1
Components 14.1.2
General 14.1.1, A.14.1.1
Mounting of Doors 14.1.3
Hoistway Door Vision Panels 14.3
Types of Doors 14.2
Labeled Horizontally Sliding Hoistway Doors for Elevators and Dumbwaiters — Fire-Rated Entrance 14.2.2
Dumbwaiters 14.2.2.4, A.14.2.2.4
Elevator Entrances 14.2.2.3, A.14.2.2.3
Labeled Swing Hoistway Doors for Elevators and Dumbwaiters — Fire-Rated Entrance 14.2.1
Dumbwaiters 14.2.1.4, A.14.2.1.4
Elevator Entrances 14.2.1.3, A.14.2.1.3
Labeled Vertically Sliding Hoistway Doors for Elevators and Dumbwaiters — Fire-Rated Entrance 14.2.3, A.14.2.3
Hollow Metal Frame
Definition 3.3.78
Hood (Rolling Steel Door)
Definition 3.3.79
Horizontally Sliding Doors ..... Chap. 8
Assembly Components 8.4
Closing Devices 8.4.1
Closing Speed 8.4.1.2
Hardware 8.4.3
Binders 8.4.3.5
Bolts 8.4.3.3
Center Latch 8.4.3.7
Handles 8.4.3.8
Hangers 8.4.3.4
Stay Rollers 8.4.3.6, A.8.4.3.6
Tracks 8.4.3.2
Type 8.4.3.1, A.8.4.3.1
Releasing Devices 8.4.2, A.8.4.2
General 8.4.2.1
Doors 8.1
Door Panels 8.1.2
General 8.1.1
Mounting of Doors 8.1.3
General 8.1.3.1
Lap 8.1.3.2
Openings. (Reserved) 8.3
Supporting Construction 8.2
Reserved 8.2.3
Sills 8.2.2
Vents 8.2.4
Tin-Clad Doors 8.2.4.1
Walls 8.2.1

-I-

Illustration of Types of Fire Window Components ..... Annex C
Inactive Leaf
Definition 3.3.80
Informational References ..... Annex L

Copyright 2014 National Fire Protection Association (NFPA). Licensed, by agreement, for individual use and download on October 4, 2014 to LEADER and READER for designated user PATTARAPORN SRITRAKOOL. No other reproduction or transmission in any form permitted without written permission of NFPA. For inquires or to report unauthorized use, contact licensing@nfpa.org.

Installation, Testing, and Maintenance of Fire Dampers ..... Chap. 19
General 19.1
Definitions 19.1.4
Breakaway Connection 19.1.4.1
Ceiling Radiation Damper 19.1.4.2
Combination Fire/Smoke Damper 19.1.4.3
Dynamic System 19.1.4.4
Fire Damper 19.1.4.5
Fire-Rated Damper Mullion 19.1.4.6
Retaining Angle 19.1.4.7
Smoke Damper 19.1.4.8
Static System 19.1.4.9
Volume Control Damper 19.1.4.10
Installation 19.2
Access 19.2.3
Ceiling Radiation Dampers 19.2.2
Dampers 19.2.1, A.19.2.1
Damper Sleeve 19.2.1.1
Duct-Sleeve Connections 19.2.1.7
Mounting Method 19.2.1.5
Opening Preparation 19.2.1.2
Retaining Angles 19.2.1.6
Sleeve Clearance Within Opening 19.2.1.4, A.19.2.1.4
Sleeve Construction 19.2.1.3
Wall Opening 19.2.4, A.19.2.4
Maintenance 19.5
Operational Test 19.3
Combination Fire/Smoke Dampers 19.3.2
Documentation 19.3.4
Fire Dampers 19.3.1
Inspection 19.3.3
Periodic Inspection and Testing 19.4, A.19.4

-K-

Keeper
Definition 3.3.81
Knocked-Down Frame
Definition 3.3.82

-L-

Labeled
Definition 3.2.3
Lap-Mounted Door (Sliding Door, Vertical Door, Horizontal Door, Swinging Door)
Definition 3.3.83
Latching Device
Definition 3.3.84
Lintel
Definition 3.3.85
Listed
Definition 3.2.4, A.3.2.4

-M-

Mullion
Definition 3.3.86
Window Mullion
Definition 3.3.86.1
Multiple Opening Door Frame
Definition 3.3.87, A.3.3.87
Muntin
Definition 3.3.88
Window Muntin
Definition 3.3.88.1

-N-

Noncombustible
Definition 3.3.89

-P-

Pass Door
Definition 3.3.90
Performance-Based Option for the Inspection, Testing, and Maintenance of Fire Door Assemblies ..... Annex J
Plant-On
Definition 3.3.91
Power-Operated Fire Doors
Definition 3.3.92
Proscenium Wall
Definition 3.3.93
Purchase Line (Hand Line)
Definition 3.3.94

-Q-

Qualified Person
Definition 3.3.95

-R-

Radiant Heat Transfer ..... Annex I
Referenced Publications ..... Chap. 2
General 2.1
NFPA Publications 2.2
Other Publications 2.3
References for Extracts in Mandatory Sections 2.4
Retaining Angle
Definition 3.3.96
Retrofit Operator
Definition 3.3.97
Roller Guide/Metal Track Side Edge Guide System
Definition 3.3.98
Rolling Steel Doors ..... Chap. 11
Assembly Components 11.4
Assembly of Rolling Doors 11.4.3
Guides 11.4.3.1
Hoods 11.4.3.2
Closing Devices 11.4.1
Power-Operated Rolling Steel Fire Doors 11.4.2, A.11.4.2
Doors 11.1
General 11.1.1
Mounting of Doors 11.1.2
Openings 11.3
Supporting Construction 11.2
Lintels 11.2.3
Sills 11.2.2
Walls 11.2.1
Weather Protection 11.5
Rolling Steel Fire Door
Definition 3.3.99, A.3.3.99
Rough Buck
Definition 3.3.100

-S-

Self-Closing Doors
Definition 3.3.101
Self-Latching Bolt
Definition 3.3.102
Sensing Edge (Rolling Steel Fire Door)
Definition 3.3.103
Service Counter Fire Door
Definition 3.3.104
Service Counter Fire Doors ..... Chap. 13
Automatic Closing 13.4
Counters 13.3
Doors 13.1
General 13.1.1
Types 13.1.2
Supporting Construction 13.2
Lintels 13.2.3
Sills 13.2.2
Walls 13.2.1
Shall
Definition 3.2.5

Copyright 2014 National Fire Protection Association (NFPA). Licensed, by agreement, for individual use and download on October 4, 2014 to LEADER and READER for designated user PATTARAPORN SRITRAKOOL. No other reproduction or transmission in any form permitted without written permission of NFPA. For inquires or to report unauthorized use, contact licensing@nfpa.org.

Should
Definition ... 3.2.6
Shutter
Definition ... 3.3.105
Side Guide Cable System
Definition ... 3.3.106
Side Light
Definition ... 3.3.107
Side Light Frame
Definition ... 3.3.108, A.3.3.108
Side Panel Frame
Definition ... 3.3.109, A.3.3.109
Sill
Definition ... 3.3.110
Sill (Rolling Steel Fire Door)
Definition ... 3.3.111
Sill (Service Counter Fire Door)
Definition ... 3.3.112
Single-Point Latch
Definition ... 3.3.113
Sliding Hardware
Definition ... 3.3.114
Smoke Damper
Definition ... 3.3.115
Smoke Detector
Definition ... 3.3.116
Special Purpose Doors ... Annex H
Special-Purpose Horizontally Sliding Accordion or Folding Doors ... Chap. 9
Assembly Components ... 9.4
Closing Devices ... 9.4.1
Hardware ... 9.4.3
Power Operators ... 9.4.2
Clearances Around Openings ... 9.3, A.9.3
Doors ... 9.1
Components ... 9.1.2
General ... 9.1.1
Mounting of Doors ... 9.1.3
Supporting Construction ... 9.2
Lintels ... 9.2.3
Sills ... 9.2.2
Walls ... 9.2.1
Spring Hinge
Definition ... 3.3.117
Spring Release Device (Rolling Steel Door)
Definition ... 3.3.118
Standard
Definition ... 3.2.7
Static System
Definition ... 3.3.119
Stay Chain
Definition ... 3.3.120
Stay Rollers (Sliding Door, Horizontal)
Definition ... 3.3.121
Strike
Definition ... 3.3.122
Electric Strike
Definition ... 3.3.122.1
Open Back Strike
Definition ... 3.3.122.2
Strike Plate
Definition ... 3.3.123
Struts
Definition ... 3.3.124
Surface Attachments to Swinging Door Faces ... Annex E
Swinging Doors with Builders Hardware ... Chap. 6
Application, Installation, and Adjustment ... 6.5
Anchorage ... 6.5.5
Attachment ... 6.5.3
General ... 6.5.1
Manufacturers' Instructions ... 6.5.2
Mounting ... 6.5.4
Assembly Components ... 6.4
Application of Door Holder/Release Devices ... 6.4.2, A.6.4.2
Astragals ... 6.4.7, A.6.4.7
Automatic Louvers ... 6.4.6
Builders Hardware ... 6.4.3, A.6.4.3
Attaching Hinges to Doors ... 6.4.3.2
Attaching Hinges to Frames ... 6.4.3.3
Hinges and Pivots ... 6.4.3.1
Shimming ... 6.4.3.4
Closing Devices ... 6.4.1
Coordinating Device ... 6.4.1.2
Gasketing ... 6.4.8
Locks or Latches ... 6.4.4
Door Attachments ... 6.4.4.7
Throw ... 6.4.4.6
Protection Plates ... 6.4.5
Doors ... 6.1
General ... 6.1.1
Mounting of Doors ... 6.1.2
Operation of Doors ... 6.1.3
Automatic-Closing Doors ... 6.1.3.3
Power-Operated Fire Doors ... 6.1.3.4
Self-Closing Doors ... 6.1.3.2
Openings ... 6.3
Door Frames ... 6.3.1
Clearances ... 6.3.1.7, A.6.3.1.7
Frames for Lights or Panels ... 6.3.2
Frames for Transom Lights, Side Lights, or Both ... 6.3.3
Frames for Transom or Side Panels ... 6.3.4
Multiple-Opening Door Frames ... 6.3.5
Supporting Construction ... 6.2
Lintels ... 6.2.3
Sills ... 6.2.2
Walls ... 6.2.1
Swinging Doors with Fire Door Hardware ... Chap. 7
Assembly Components ... 7.4
Closing Devices for Swinging Tin-Clad and Sheet Metal Fire Doors ... 7.4.1, A.7.4.1
Coordinating Devices ... 7.4.2
Fire Door Hardware ... 7.4.3
Attaching Fire Door Hardware to Frames for Flush-Mounted Doors ... 7.4.3.4
Attaching of Wall Strips for Lap-Mounted Doors ... 7.4.3.5
Components ... 7.4.3.2
General ... 7.4.3.1
Hinges and Latches, Number and Length ... 7.4.3.3, A.7.4.3.3
Doors ... 7.1
Components ... 7.1.2
General ... 7.1.1
Mounting of Doors ... 7.1.3
Operation of Doors ... 7.1.4
Openings ... 7.3
Frames for Flush-Mounted Doors ... 7.3.2, A.7.3.2
Frames for Lap-Mounted Doors ... 7.3.1
Supporting Construction ... 7.2
Reserved ... 7.2.3
Sills ... 7.2.2
Vents ... 7.2.4
Walls ... 7.2.1

-T-

Temperature Rise
Definition ... 3.3.125
Track Brackets (Sliding Doors)
Definition ... 3.3.126
Transom
Definition ... 3.3.127
Transom and Side Light Frame
Definition ... 3.3.128, A.3.3.128
Transom and Side Panel Frame
Definition ... 3.3.129, A.3.3.129

Copyright 2014 National Fire Protection Association (NFPA). Licensed, by agreement, for individual use and download on October 4, 2014 to LEADER and READER for designated user PATTARAPORN SRITRAKOOL. No other reproduction or transmission in any form permitted without written permission of NFPA. For inquires or to report unauthorized use, contact licensing@nfpa.org.

Transom Light Frame
Definition ... 3.3.130, A.3.3.130
Transom Panel
Definition ... 3.3.131
Transom Panel Frame
Definition ... 3.3.132, A.3.3.132
Types of Door Construction ... Annex G

-U-

Undercutting
Definition ... 3.3.133

-V-

Vent (Sliding Door, Vertical and Horizontal Tin-Clad Only)
Definition ... 3.3.134
Vertical Guide Pocket
Definition ... 3.3.135
Vertically Sliding Door
Definition ... 3.3.136
Vertically Sliding Fire Doors ... Chap. 10
Assembly Components ... 10.4
Automatic Closers ... 10.4.2
Closing Devices ... 10.4.1
Fire Door Hardware ... 10.4.3
Fire Door Hardware for Steel Sectional Doors ... 10.4.3.2
Counterbalancing Mechanism ... 10.4.3.2.5
Guides ... 10.4.3.2.3
Interlocking ... 10.4.3.2.4
Label ... 10.4.3.2.1
Track ... 10.4.3.2.2
Fire Door Hardware for Tin-Clad and Sheet Metal Doors ... 10.4.3.1, A.10.4.3.1
Bumpers and Bumper Shoes ... 10.4.3.1.6
Cables ... 10.4.3.1.4
Chafing Strips ... 10.4.3.1.5
Components ... 10.4.3.1.1
Guides ... 10.4.3.1.3
Handles ... 10.4.3.1.8
Rear Binders ... 10.4.3.1.7, A.10.4.3.1.7
Track ... 10.4.3.1.2, A.10.4.3.1.2
Clearances ... 10.3
Doors ... 10.1
General ... 10.1.1
Mounting of Doors ... 10.1.2
Supporting Construction ... 10.2
Lintels ... 10.2.3
Sills ... 10.2.2
Vents ... 10.2.4
Walls ... 10.2.1
Attachment of Door Assembly ... 10.2.1.1
Viewer
Definition ... 3.3.137
Volume Control Damper
Definition ... 3.3.138

-W-

Wedge (Sliding Door, Horizontal Tin-Clad and Flush Sheet Metal)
Definition ... 3.3.139
Window
Definition ... 3.3.140
Window Frame
Definition ... 3.3.141
Window Sash
Definition ... 3.3.142
Window Ventilator
Definition ... 3.3.143
Wire Glazing Clips
Definition ... 3.3.144

Copyright 2014 National Fire Protection Association (NFPA). Licensed, by agreement, for individual use and download on October 4, 2014 to LEADER and READER for designated user PATTARAPORN SRITRAKOOL. No other reproduction or transmission in any form permitted without written permission of NFPA. For inquires or to report unauthorized use, contact licensing@nfpa.org.

Formal Interpretation

NFPA 80

Fire Doors and Other Opening Protectives

2013 Edition

Reference: General
F.I. 90-1

Question: If a glazing material is fabricated as a wall and the wall assembly is successfully tested per NFPA 251, *Standard Methods of Fire Tests of Building Construction and Materials*, for some given fire resistance rating, is it regulated by NFPA 80, *Standard for Fire Doors and Windows*?

Answer: No.

Issue Edition: 1990
Reference: General
Issue Date: April 2, 1991
Effective Date: April 22, 1991

Copyright © 2012 All Rights Reserved
NATIONAL FIRE PROTECTION ASSOCIATION

Copyright 2014 National Fire Protection Association (NFPA). Licensed, by agreement, for individual use and download on October 4, 2014 to LEADER and READER for designated user PATTARAPORN SRITRAKOOL. No other reproduction or transmission in any form permitted without written permission of NFPA. For inquires or to report unauthorized use, contact licensing@nfpa.org.

Formal Interpretation

NFPA 80

Fire Doors and Other Opening Protectives

2013 Edition

Reference: Entire Document
F.I. 90-2

Background: Paragraph 16-2.10.2 of NFPA *101*-1988, *Life Safety Code*, requires: "An approved luminescent or self-luminous exit sign shall be placed on each door to an exit stair from an interior corridor."

The details of such exit sign's size, construction, and illumination are contained in Section 5-10 of NFPA 101.

Question 1: May an exit sign as described in the background above be affixed to rated fire doors without violating any limit?

Answer: Yes.

Question 2: May an exit sign as described in the background above be affixed to rated fire doors without violating any limitations of NFPA 80?

Answer: Yes, provided it is surface-applied on the lower 16 inches of the door.

Issue Edition: 1990
Reference: Entire Document
Issue Date: July 9, 1991
Effective Date: July 29, 1991

Copyright © 2012 All Rights Reserved
NATIONAL FIRE PROTECTION ASSOCIATION

Copyright 2014 National Fire Protection Association (NFPA). Licensed, by agreement, for individual use and download on October 4, 2014 to LEADER and READER for designated user PATTARAPORN SRITRAKOOL. No other reproduction or transmission in any form permitted without written permission of NFPA. For inquires or to report unauthorized use, contact licensing@nfpa.org.

Formal Interpretation

NFPA 80

Fire Doors and Other Opening Protectives

2013 Edition

Reference: 1.6.1
F.I. No.: 99-1 (NFPA 80)

Background: Issue was raised during a Quality Assessment of the Fire Protection Program at Perry the Nuclear Operating Plant.

Question No. 1: Is it the intent of paragraph 1.6.1 that labels on fire doors not be removed, painted or defaced while the door is in service?

Answer: Yes

Question No. 2: If the label on an existing fire door has been removed or is no longer legible, is it acceptable to verify the rating of the fire door through other means acceptable to the authority have jurisdiction such as an inspection or certification service that provides acceptable documentation?

Answer: Yes

Issue Edition: 1999
Reference: 1.6.1
Issue Date: April 20, 2004
Effective Date: May 10, 2004

Copyright © 2012 All Rights Reserved
NATIONAL FIRE PROTECTION ASSOCIATION

Copyright 2014 National Fire Protection Association (NFPA). Licensed, by agreement, for individual use and download on October 4, 2014 to LEADER and READER for designated user PATTARAPORN SRITRAKOOL. No other reproduction or transmission in any form permitted without written permission of NFPA. For inquires or to report unauthorized use, contact licensing@nfpa.org.

Formal Interpretation

NFPA 80

Fire Doors and Other Opening Protectives

2013 Edition

Reference: 1-7 and General
F.I. 90-3

Background: NFPA 252, *Standard Methods of Fire Tests of Door Assemblies*, qualifies door assemblies for use as fire doors designed to protect door openings in fire resistive walls when required by the authority having jurisdiction. Part of the conditions of acceptance requires that the door assembly shall withstand both the fire endurance test and the hose stream test without developing any openings through the assembly except for dislodging of small portions of glass light during the hose stream test. This exception is based on the installation of wired glass in the glass light. New glazing materials (other than wired glass) have been developed that remain entirely in place without developing any openings through the assembly during both the fire endurance test and the hose stream test. However, those new glazing materials fall under the definition for glazing material in Section 1-4 of NFPA 80, *Standard for Fire Doors and Windows*, and are thus regulated by Section 1-7 of that Standard.

Question: If a fire doors assembly containing glazing material is successfully tested per NFPA 252, *Standard Methods of Fire Test of Door Assemblies*, and the glazing material is not dislodged so as to develop openings through the assembly as described in that standard, thus qualifying the glazing material as part of the door and not as a glass light permitted to have small portions of glass dislodged during the hose stream test, is it intended to limit the size and area of the glazing material in accordance with 1-7.3 of NFPA 80, *Standard for Fire Doors and Windows?*

Answer: No.

Issue Edition: 1990
Reference: 1-7 and General
Issue Date: July 9, 1991
Effective Date: July 29, 1991

Copyright © 2012 All Rights Reserved
NATIONAL FIRE PROTECTION ASSOCIATION

Copyright 2014 National Fire Protection Association (NFPA). Licensed, by agreement, for individual use and download on October 4, 2014 to LEADER and READER for designated user PATTARAPORN SRITRAKOOL. No other reproduction or transmission in any form permitted without written permission of NFPA. For inquires or to report unauthorized use, contact licensing@nfpa.org.

Formal Interpretation

NFPA 80

Fire Doors and Other Opening Protectives

2013 Edition

Reference: 1-7.5, 13-2.3
F.I. 90-4

Question: Given the requirements for permanent marking of individual glazing units found in 1-7.5 and 13-2.3, would acid etched or sand blasted labels applied under a third party factory follow-up program meet the committee's intent for permanent marking?

Answer: Yes.

Issue Edition: 1990
Reference: 1-7.4, 13-2.3
Issue Date: November 6, 1991
Effective Date: November 26, 1991

Copyright © 2012 All Rights Reserved
NATIONAL FIRE PROTECTION ASSOCIATION

Copyright 2014 National Fire Protection Association (NFPA). Licensed, by agreement, for individual use and download on October 4, 2014 to LEADER and READER for designated user PATTARAPORN SRITRAKOOL. No other reproduction or transmission in any form permitted without written permission of NFPA. For inquires or to report unauthorized use, contact licensing@nfpa.org.

Formal Interpretation

NFPA 80

Fire Doors and Other Opening Protectives

2013 Edition

Reference: 2-4.7.1
F.I. 80-4

Question: Is it the intent of 2-4.7.1 to allow for the use of three-hour fire protection rated door assemblies without an astragal?

Answer: No, it is the intent that pairs of doors with a fire protection rating of more than one and a half hours have an overlapping astragal.

Issue Edition: 1983
Reference: 2-7
Date: April 1985

Copyright © 2012 All Rights Reserved
NATIONAL FIRE PROTECTION ASSOCIATION

Copyright 2014 National Fire Protection Association (NFPA). Licensed, by agreement, for individual use and download on October 4, 2014 to LEADER and READER for designated user PATTARAPORN SRITRAKOOL. No other reproduction or transmission in any form permitted without written permission of NFPA. For inquires or to report unauthorized use, contact licensing@nfpa.org.

Sequence of Events Leading to Issuance of this NFPA Committee Document

Step 1: Call for Proposals

- Proposed new Document or new edition of an existing Document is entered into one of two yearly revision cycles, and a Call for Proposals is published.

Step 2: Report on Proposals (ROP)

- Committee meets to act on Proposals, to develop its own Proposals, and to prepare its Report.
- Committee votes by written ballot on Proposals. If two-thirds approve, Report goes forward. Lacking two-thirds approval, Report returns to Committee.
- Report on Proposals (ROP) is published for public review and comment.

Step 3: Report on Comments (ROC)

- Committee meets to act on Public Comments to develop its own Comments, and to prepare its report.
- Committee votes by written ballot on Comments. If two-thirds approve, Report goes forward. Lacking two-thirds approval, Report returns to Committee.
- Report on Comments (ROC) is published for public review.

Step 4: Technical Report Session

- "*Notices of intent to make a motion*" are filed, are reviewed, and valid motions are certified for presentation at the Technical Report Session. ("Consent Documents" that have no certified motions bypass the Technical Report Session and proceed to the Standards Council for issuance.)
- NFPA membership meets each June at the Annual Meeting Technical Report Session and acts on Technical Committee Reports (ROP and ROC) for Documents with "certified amending motions."
- Committee(s) vote on any amendments to Report approved at NFPA Annual Membership Meeting.

Step 5: Standards Council Issuance

- Notification of intent to file an appeal to the Standards Council on Association action must be filed within 20 days of the NFPA Annual Membership Meeting.
- Standards Council decides, based on all evidence, whether or not to issue Document or to take other action, including hearing any appeals.

Committee Membership Classifications

The following classifications apply to Technical Committee members and represent their principal interest in the activity of the committee.

M *Manufacturer:* A representative of a maker or marketer of a product, assembly, or system, or portion thereof, that is affected by the standard.

U *User:* A representative of an entity that is subject to the provisions of the standard or that voluntarily uses the standard.

I/M *Installer/Maintainer:* A representative of an entity that is in the business of installing or maintaining a product, assembly, or system affected by the standard.

L *Labor:* A labor representative or employee concerned with safety in the workplace.

R/T *Applied Research/Testing Laboratory:* A representative of an independent testing laboratory or independent applied research organization that promulgates and/or enforces standards.

E *Enforcing Authority:* A representative of an agency or an organization that promulgates and/or enforces standards.

I *Insurance:* A representative of an insurance company, broker, agent, bureau, or inspection agency.

C *Consumer:* A person who is, or represents, the ultimate purchaser of a product, system, or service affected by the standard, but who is not included in the *User* classification.

SE *Special Expert:* A person not representing any of the previous classifications, but who has a special expertise in the scope of the standard or portion thereof.

NOTES:
1. "Standard" connotes code, standard, recommended practice, or guide.
2. A representative includes an employee.
3. While these classifications will be used by the Standards Council to achieve a balance for Technical Committees, the Standards Council may determine that new classifications of members or unique interests need representation in order to foster the best possible committee deliberations on any project. In this connection, the Standards Council may make appointments as it deems appropriate in the public interest, such as the classification of "Utilities" in the National Electrical Code Committee.
4. Representatives of subsidiaries of any group are generally considered to have the same classification as the parent organization.

Copyright 2014 National Fire Protection Association (NFPA). Licensed, by agreement, for individual use and download on October 4, 2014 to LEADER and READER for designated user PATTARAPORN SRITRAKOOL. No other reproduction or transmission in any form permitted without written permission of NFPA. For inquires or to report unauthorized use, contact licensing@nfpa.org.

Stay Up-To-Date. Join NFPA® Today!

☑ **YES** Please enroll me as a member of NFPA for the term checked below. Activate all benefits, and ship my *Member Kit* including the *Benefits Guide* and other resources to help me make the most of my NPFA membership.

Please allow three to four weeks for the kit to arrive.

Billing Information:

Name _____ Title _____

Organization _____

Address _____

City _____ State _____ Zip/Postal Code _____

Country _____

Phone _____ E-mail _____

Priority Code: 8J-MIS-1Z

Please Answer The Following Questions:

Job Title *(check one)*

- ❑ Architect, Engineer, Consultant, Contractor (C17)
- ❑ Facilities Safety Officer (F14)
- ❑ Fire Chief, Other Fire Service (A11)
- ❑ Loss Control, Risk Manager (L11)
- ❑ Inspector, Building Official, Fire Marshal (F03)
- ❑ Owner, President, Manager, Administrator (C10)
- ❑ Other (please specify): (G11)_____

Type of Organization *(check one)*

- ❑ Architecture, Engineering, Contracting (A14)
- ❑ Commercial Firm (Office, Retail, Lodging, Restaurant) (G13)
- ❑ Electrical Services, Installation (J11)
- ❑ Fire Service, Public and Private (AA1)
- ❑ Government (C12)
- ❑ Industrial Firm (Factory, Warehouse) (C11)
- ❑ Institutional (Health Care, Education, Detention, Museums) (B11)
- ❑ Insurance, Risk Management (B12)
- ❑ Utilities (G12)
- ❑ Other (please specify): (G11)_____

4 Easy Ways to Join

Fax: 1-800-593-6372, Outside the U.S. +1-508-895-8301
Mail: NFPA Membership Services Center,
11 Tracy Drive, Avon, MA 02322-9908
Online: nfpa.org
Call: 1-800-344-3555
Outside the U.S. call +1-617-770-3000

6/12-D

Terms and Payment:

- ❑ 1 year ($165)
- ❑ 2 years ($300) SAVE $30
- ❑ 3 years ($430) SAVE $65

Annual membership dues include a $45 subscription to *NFPA Journal*®. Regular membership in NFPA is individual and non-transferable. NFPA Journal is a registered trademark of the National Fire Protection Association, Quincy, MA 02169. Voting privileges begin after 180 days of individual membership. Prices subject to change.

Payment Method:

Check One:

- ❑ Payment Enclosed *(Make check payable to NFPA.)*
- ❑ Purchase Order *(Please attach this form to your P.O.)*
- ❑ Bill Me Later *(Not available on International memberships.)*

Charge My: ❑ VISA ❑ MasterCard ❑ AmEx ❑ Discover

Card #_____

Expiration Date _____

Name on Card _____

Signature _____

International members: Please note prepayment is required on all International orders. Be sure to enclose a check or select your preferred credit card option.

100% Money-Back Guarantee

If anytime during your first year you decide membership is not for you, let us know and you'll receive a 100% refund of your dues.

Copyright 2014 National Fire Protection Association (NFPA). Licensed, by agreement, for individual use and download on October 4, 2014 to LEADER and READER for designated user PATTARAPORN SRITRAKOOL. No other reproduction or transmission in any form permitted without written permission of NFPA. For inquires or to report unauthorized use, contact licensing@nfpa.org.

"Member-Only" Benefits
Keeps You Up-To-Date!

FREE! Technical Support — Technical Support by Phone/Email. Get fast, reliable answers to all code-related questions—from electrical safety for employee workplaces to carbon dioxide extinguishing systems—from NFPA's team of fire protection specialists.

NFPA Journal® — THE journal of record for fire protection, this bi-monthly publication will keep you abreast of the latest fire prevention and safety practices, as well as new technologies and strategies for protecting life and property from fire.

NFPA Update — This easy-to-read monthly e-newsletter will keep you up-to-date on important association programs such as the annual meeting; bring you times of interest from NFPA's regional offices; and alert you to nationwide events and opportunities you won't want to miss.

NFPA News — From new standards for dry cleaning plants to warning equipment for household carbon monoxide, this monthly online update keeps you abreast of additions of changes that could impact how you do you work.

NFPA Standards Directory — The NFPA Standards Directory is your complete guide to NFPA's code-making process. Simply access your online NFPA member profile for document revision guidelines, the revision cycle schedule, and forms for submitting Proposals and Comments. Your online NFPA member profile and access to the NFPA Standards Directory is automatically generated once you join NFPA.

FREE! Section Membership — Share YOUR expertise with others in any of 16 industry-specific sections covering your own field of interest.

Member Kit — Includes Membership Certificate, Pin, Decals, ID Card, and Camera-ready Logo Art. Display the NFPA member logo proudly on your business correspondence, literature, website, and vehicles.

10% Discounts — Save hundreds of dollars each year on the many products and services listed in the NFPA Catalog, including codes and standards publications, handbooks, training videos, and other education materials to increase your knowledge and skills.

Voting Rights — Your chance to help shape the future direction of fire prevention codes and standards. Voting rights go into effect 180 days from the start of individual membership.

Conference Invitation— Invitation to the NFPA Conference and Expo. Attend this important meeting at discounted rates as a member of NFPA.

Join NFPA today!
www.nfpa.org

NFPA® and *NFPA Journal*® are registered trademarks of the National Fire Protection Association, Quincy, MA 02169-7471