Copyright 2014 National Fire Protection Association (NFPA). Licensed, by agreement, for individual use and download on October 4, 2014 to LEADER and READER for designated user PATTARAPORN SRITRAKOOL. No other reproduction or transmission in any form permitted without written permission of NFPA. For inquires or to report unauthorized use, contact licensing@nfpa.org.

# NFPA® 780

# Standard for the Installation of Lightning Protection Systems

## 2014 Edition




NFPA, 1 Batterymarch Park, Quincy, MA 02169-7471
An International Codes and Standards Organization

Copyright 2014 National Fire Protection Association (NFPA). Licensed, by agreement, for individual use and download on October 4, 2014 to LEADER and READER for designated user PATTARAPORN SRITRAKOOL. No other reproduction or transmission in any form permitted without written permission of NFPA. For inquires or to report unauthorized use, contact licensing@nfpa.org.

## IMPORTANT NOTICES AND DISCLAIMERS CONCERNING NFPA® DOCUMENTS
## NOTICE AND DISCLAIMER OF LIABILITY CONCERNING THE USE OF NFPA DOCUMENTS

NFPA® codes, standards, recommended practices, and guides ("NFPA Documents"), of which the document contained herein is one, are developed through a consensus standards development process approved by the American National Standards Institute. This process brings together volunteers representing varied viewpoints and interests to achieve consensus on fire and other safety issues. While the NFPA administers the process and establishes rules to promote fairness in the development of consensus, it does not independently test, evaluate, or verify the accuracy of any information or the soundness of any judgments contained in NFPA Documents.

The NFPA disclaims liability for any personal injury, property or other damages of any nature whatsoever, whether special, indirect, consequential or compensatory, directly or indirectly resulting from the publication, use of, or reliance on NFPA Documents. The NFPA also makes no guaranty or warranty as to the accuracy or completeness of any information published herein.

In issuing and making NFPA Documents available, the NFPA is not undertaking to render professional or other services for or on behalf of any person or entity. Nor is the NFPA undertaking to perform any duty owed by any person or entity to someone else. Anyone using this document should rely on his or her own independent judgment or, as appropriate, seek the advice of a competent professional in determining the exercise of reasonable care in any given circumstances.

The NFPA has no power, nor does it undertake, to police or enforce compliance with the contents of NFPA Documents. Nor does the NFPA list, certify, test, or inspect products, designs, or installations for compliance with this document. Any certification or other statement of compliance with the requirements of this document shall not be attributable to the NFPA and is solely the responsibility of the certifier or maker of the statement.

### REMINDER: UPDATING OF NFPA DOCUMENTS

Users of NFPA codes, standards, recommended practices, and guides ("NFPA Documents") should be aware that NFPA Documents may be amended from time to time through the issuance of Tentative Interim Amendments or corrected by Errata. An official NFPA Document at any point in time consists of the current edition of the document together with any Tentative Interim Amendment and any Errata then in effect.

In order to determine whether an NFPA Document has been amended through the issuance of Tentative Interim Amendments or corrected by Errata, visit the Document Information Pages on NFPA's website. The Document Information Pages provide up-to-date, document specific information including any issued Tentative Interim Amendments and Errata.

To access the Document Information Page for a specific NFPA Document go to http://www.nfpa.org/document for a list of NFPA Documents, and click on the appropriate Document number (e.g., NFPA 101). In addition to posting all existing Tentative Interim Amendments and Errata, the Document Information Page also includes the option to sign-up for an "Alert" feature to receive an email notification when new updates and other information are posted regarding the document.

ISBN: 978-145590720-5 (Print)
ISBN: 978-145590745-8 (PDF)

Copyright 2014 National Fire Protection Association (NFPA). Licensed, by agreement, for individual use and download on October 4, 2014 to LEADER and READER for designated user PATTARAPORN SRITRAKOOL. No other reproduction or transmission in any form permitted without written permission of NFPA. For inquires or to report unauthorized use, contact licensing@nfpa.org.

# IMPORTANT NOTICES AND DISCLAIMERS CONCERNING NFPA® DOCUMENTS

## ADDITIONAL NOTICES AND DISCLAIMERS

### Updating of NFPA Documents

Users of NFPA codes, standards, recommended practices, and guides ("NFPA Documents") should be aware that these documents may be superseded at any time by the issuance of new editions or may be amended from time to time through the issuance of Tentative Interim Amendments. An official NFPA Document at any point in time consists of the current edition of the document together with any Tentative Interim Amendments and any Errata then in effect. In order to determine whether a given document is the current edition and whether it has been amended through the issuance of Tentative Interim Amendments or corrected through the issuance of Errata, consult appropriate NFPA publications such as the National Fire Codes® Subscription Service, visit the NFPA website at www.nfpa.org, or contact the NFPA at the address listed below.

### Interpretations of NFPA Documents

A statement, written or oral, that is not processed in accordance with Section 6 of the Regulations Governing Committee Projects shall not be considered the official position of NFPA or any of its Committees and shall not be considered to be, nor be relied upon as, a Formal Interpretation.

### Patents

The NFPA does not take any position with respect to the validity of any patent rights referenced in, related to, or asserted in connection with an NFPA Document. The users of NFPA Documents bear the sole responsibility for determining the validity of any such patent rights, as well as the risk of infringement of such rights, and the NFPA disclaims liability for the infringement of any patent resulting from the use of or reliance on NFPA Documents.

NFPA adheres to the policy of the American National Standards Institute (ANSI) regarding the inclusion of patents in American National Standards ("the ANSI Patent Policy"), and hereby gives the following notice pursuant to that policy:

**NOTICE:** The user's attention is called to the possibility that compliance with an NFPA Document may require use of an invention covered by patent rights. NFPA takes no position as to the validity of any such patent rights or as to whether such patent rights constitute or include essential patent claims under the ANSI Patent Policy. If, in connection with the ANSI Patent Policy, a patent holder has filed a statement of willingness to grant licenses under these rights on reasonable and nondiscriminatory terms and conditions to applicants desiring to obtain such a license, copies of such filed statements can be obtained, on request, from NFPA. For further information, contact the NFPA at the address listed below.

### Law and Regulations

Users of NFPA Documents should consult applicable federal, state, and local laws and regulations. NFPA does not, by the publication of its codes, standards, recommended practices, and guides, intend to urge action that is not in compliance with applicable laws, and these documents may not be construed as doing so.

### Copyrights

NFPA Documents are copyrighted. They are made available for a wide variety of both public and private uses. These include both use, by reference, in laws and regulations, and use in private self-regulation, standardization, and the promotion of safe practices and methods. By making these documents available for use and adoption by public authorities and private users, the NFPA does not waive any rights in copyright to these documents.

Use of NFPA Documents for regulatory purposes should be accomplished through adoption by reference. The term "adoption by reference" means the citing of title, edition, and publishing information only. Any deletions, additions, and changes desired by the adopting authority should be noted separately in the adopting instrument. In order to assist NFPA in following the uses made of its documents, adopting authorities are requested to notify the NFPA (Attention: Secretary, Standards Council) in writing of such use. For technical assistance and questions concerning adoption of NFPA Documents, contact NFPA at the address below.

### For Further Information

All questions or other communications relating to NFPA Documents and all requests for information on NFPA procedures governing its codes and standards development process, including information on the procedures for requesting Formal Interpretations, for proposing Tentative Interim Amendments, and for proposing revisions to NFPA documents during regular revision cycles, should be sent to NFPA headquarters, addressed to the attention of the Secretary, Standards Council, NFPA, 1 Batterymarch Park, P.O. Box 9101, Quincy, MA 02269-9101; email: stds_admin@nfpa.org

For more information about NFPA, visit the NFPA website at www.nfpa.org.

Copyright 2014 National Fire Protection Association (NFPA). Licensed, by agreement, for individual use and download on October 4, 2014 to LEADER and READER for designated user PATTARAPORN SRITRAKOOL. No other reproduction or transmission in any form permitted without written permission of NFPA. For inquires or to report unauthorized use, contact licensing@nfpa.org.



Copyright © 2013 National Fire Protection Association®. All Rights Reserved.

# NFPA® 780

## Standard for the

# Installation of Lightning Protection Systems

## 2014 Edition

This edition of NFPA 780, *Standard for the Installation of Lightning Protection Systems*, was prepared by the Technical Committee on Lightning Protection. It was issued by the Standards Council on May 28, 2013, with an effective date of June 17, 2013, and supersedes all previous editions.

This edition of NFPA 780 was approved as an American National Standard on June 17, 2013.

## Origin and Development of NFPA 780

NFPA first adopted *Specifications for Protection of Buildings Against Lightning* in 1904. Revised standards were adopted in 1905, 1906, 1925, 1932, and 1937. In 1945, the NFPA Committee and the parallel American Standards Association (ASA) Committee on Protection Against Lightning were reorganized and combined under the sponsorship of NFPA, the National Bureau of Standards, and the American Institute of Electrical Engineers (now the IEEE). In 1946, NFPA acted to adopt Part III and in 1947 published a revised edition incorporating this part. Further revisions recommended by the Committee were adopted by NFPA in 1949, 1950, 1951, 1952, 1957, 1959, 1963, 1965, 1968, 1975, 1977, 1980, 1983, 1986, 1989, and 1992.

Commencing with the 1992 edition of the *Lightning Protection Code*, the NFPA numerical designation of the document was changed from NFPA 78 to NFPA 780.

With the issuance of the 1995 edition, the name of the document was changed from *Lightning Protection Code* to *Standard for the Installation of Lightning Protection Systems*. This change was directed by the Standards Council in order to make the title more accurately reflect the document's content. In addition, the Council directed certain changes to the scope of the document to clarify that the document did not cover lightning protection installation requirements for early streamer emission systems or lightning dissipater array systems.

The 1997 edition of NFPA 780 incorporated editorial changes to make the document more user friendly.

In issuing this document, the Standards Council noted that lightning is a stochastic, if not capricious, natural process. Its behavior is not yet completely understood. This standard is intended to provide requirements, within the limits of the current state of knowledge, for the installation of those lightning protection systems covered by the standard.

The 2000 edition of NFPA 780 was amended to provide requirements for open structures such as those found on golf courses. A 1998 lightning flash density chart replaced the 1972 lightning frequency isoceraunic chart.

The 2004 edition of NFPA 780 reflected an extensive editorial revision of the standard to comply with the concurrent edition of the *NFPA Manual of Style for Technical Committee Documents*. These revisions included the addition of three administrative chapters at the beginning of the standard: "Administration," "Referenced Publications," and "Definitions." Five technical chapters followed the administrative chapters in the same sequence as in the 2000 edition. Other editorial revisions included the breakout of paragraphs with multiple requirements into an individually numbered paragraph for each requirement, the minimization of the use of exceptions, the use of consistent headings for sections and section subdivisions, and reorganization to limit paragraph numbering to six digits. The International System of Units, commonly known as SI or metric, was used throughout the document. The appendixes were renamed annexes and reordered in a more logical sequence.

The 2004 edition also contained a number of technical revisions throughout the standard. These revisions included the following: a main conductor, solid strip, was added for Class II material requirements for ordinary structures exceeding 75 ft in height; handrails could be used as a substitute for down conductors; additional separation between ground rods was required where multiple ground rods are used; additional guidance was provided for those

NFPA and National Fire Protection Association are registered trademarks of the National Fire Protection Association, Quincy, Massachusetts 02169.

Copyright 2014 National Fire Protection Association (NFPA). Licensed, by agreement, for individual use and download on October 4, 2014 to LEADER and READER for designated user PATTARAPORN SRITRAKOOL. No other reproduction or transmission in any form permitted without written permission of NFPA. For inquires or to report unauthorized use, contact licensing@nfpa.org.



instances where it is necessary to install the grounding conductor directly on bedrock; the section entitled Surge Suppression was entirely rewritten; titanium strike termination devices were permitted to be used; and in Annex K the term *Faraday cage* was replaced with *metallic cage*.

The 2008 edition provided requirements for surge protective devices to be installed at all power service entrances, at the entrance of conductive communications systems and antenna systems, and where an electrical or electronic system conductor leaves the structure.

The new definition for *lightning protection system* included the term *conductive structural members*. Clarification was provided relative to the use of ancillary metal parts that cannot be substituted for the main conductor. Strike termination devices included air terminals, metal masts, certain permanent metal parts of structures, and elevated conductors. Revisions clarified that metal masts and overhead ground wires were included in the requirements of Chapter 4.

Significant changes were made to the requirements for the use of bimetallic clamps and aluminum in proximity to earth. The standard has long required that grounding electrodes be located near the outside perimeter of the structure, and in the 2008 edition additional guidance was provided to assist the system designer. Changes were also made to better address the requirements for grounding electrodes in shallow topsoil applications.

The requirements for the use of multiple ground rods were revised. Revisions were also made in numerous areas of the standard for clarity and to enhance its usability. Revisions to the graphs and formulas for the rolling sphere method were made to facilitate their use in metric units.

Requirements were added to address proper installation of lightning protection equipment on large roof top mechanical units. The installation of air terminals and main-size conductors in these applications were quantified and detailed.

Revisions were made to enhance and clarify the requirements for the bonding together of all grounded media and underground metallic piping. The intent was to provide for potential equalization and not to use the metallic piping as a lightning protection system grounding electrode. All grounding media and buried metallic conductors that might assist in providing a path for lightning currents in or on a structure must be interconnected to provide a common ground potential. Guidance was provided on the use of isolating spark gaps.

Significant changes were made to the requirements pertaining to the conductors and other lightning protection system hardware used near the top of a heavy-duty stack.

Other significant changes included a complete rewrite of Chapter 8, Protection for Watercraft, providing a number of technical revisions; more user information added in Annex B, Principles of Lightning Protection; and a revision of Annex F, Protection for Trees.

In addition to significant technical changes, the 2011 edition included new and revised text.

With the addition of two new chapters, the 2011 edition of the standard presented a major change in the scope of the document. The first new chapter addressed the protection of structures housing ammunition and explosive materials. The second new chapter included requirements for providing lightning protection for wind turbines, specifically wind turbine structures that comprise externally rotating blades, a nacelle, and a supporting tower. The 2011 edition was substantially reorganized to accommodate these new chapters in a logical order.

The sections pertaining to strike termination devices, zones of protection, and the rolling sphere method were totally reorganized for better usability. The text clearly provided that strike termination devices include air terminals, metal masts, permanent metal parts of structures, and overhead ground wires. The text qualified where a metal mast would be permitted to serve as the down conductor. The requirements for overhead ground wires and masts and overhead ground wires were relocated.

The 2011 edition clarified the requirements for strike termination devices at the eaves for a pitched roof, and a figure was added to graphically illustrate that condition.

A new section on roof top helipads provided requirements to ensure that an adequate level of protection is provided to those areas within the height and safety criteria set forth by the Federal Aviation Administration (FAA) or other AHJs.

Chapter 7 provided requirements for the protection of structures containing flammable vapors, flammable gases, or liquids that can give off flammable vapors. The section on floating roof tanks was revised in its entirety as a result of recent testing and research conducted for aboveground storage tanks.

The lightning risk assessment methodology provided in Annex L was completely rewritten. The lightning risk assessment was provided to assist the building owner, safety professional, or architect/engineer in determining the risk of damage or injury due to lightning. This annex provided both a simplified, quick-look assessment and a more detailed assessment for those requiring a more detailed analysis. Once the level of risk has been determined, the development of appropriate lightning protection measures can begin.

The 2014 edition provides reorganization of Sections 4.7 and 4.8, to better align the requirements for strike termination devices. Reorganization of these sections in a more logical order clarifies the requirements and application of the standard. Previously, these requirements were intermingled, causing confusion and possible misapplication. Section 4.8 has also been revised to clarify the requirements for protection where small objects are located on roofs.

Section 4.14 has been revised and reorganized to include parts of Section 4.20, and explanatory text was provided to ensure clarity, alignment, and coordination with the bonding interconnections of *NFPA 70, National Electrical Code*.

Copyright 2014 National Fire Protection Association (NFPA). Licensed, by agreement, for individual use and download on October 4, 2014 to LEADER and READER for designated user PATTARAPORN SRITRAKOOL. No other reproduction or transmission in any form permitted without written permission of NFPA. For inquires or to report unauthorized use, contact licensing@nfpa.org.



Sections 4.15 through 4.21 have been totally restructured and revised to place similar bonding requirements together to improve the flow of the document for the user. Similar or repetitive requirements have been combined or restructured to clarify the requirements.

A new subsection, 4.7.13, in the 2014 edition addresses the use on buildings of fixed metal objects that have movable or rotating metal components, for example, jib cranes, wind socks, observatories/telescopes, opening roofs (typically over swimming pools), window washing davits/cars (left permanently on the roof, typically on a track), construction cranes, panning security cameras, broadcast television cameras, traffic cameras, radar dishes, weather vanes, gravity vents, roof-mounted wind turbines, smoke hatches/blowout hatches, opening skylights, and photovoltaic arrays (motorized arrays that tilt to track the sun as it moves across the sky).

NFPA 780 has been revised to reformat the use of U.S. customary (inch-pound) and metric (SI) units. U.S. customary units are followed by SI units in parentheses. Several formulas and tables were updated to provide both U.S. customary (inch-pound) and metric (SI) units. Also, a new section, Section 1.4, addresses retroactivity for NFPA 780.

A new chapter, Chapter 11, has been added to provide lightning protection criteria requirements and guidance for airfield lighting circuits. Development of this chapter began prior to the 2011 edition but was held by the Committee in anticipation of new material and to enable better alignment with federal aviation requirements. Chapter 11 provides a thorough look at design and installation of lightning protection systems to afford protection to those open areas. Several figures provide ample explanation and guidance to the user.

As the demand for renewable and alternative energy sources continues, there is a rapid deployment of solar systems and arrays. Because these are often installed on roof tops, there is a risk of greater exposure. Buildings provided with lightning protection systems now see a greater abundance of roof top-mounted equipment, and the lightning protection system might not be designed to address the new equipment. Buildings not provided with lightning protection systems might need to address the additional mechanical structure and equipment. The new Chapter 12 addresses lightning protection systems for solar systems and arrays.

The requirements pertaining to catenary systems have been reviewed, and significant annex material has been provided to clarify computations for applications with metal or wood poles.

Copyright 2014 National Fire Protection Association (NFPA). Licensed, by agreement, for individual use and download on October 4, 2014 to LEADER and READER for designated user PATTARAPORN SRITRAKOOL. No other reproduction or transmission in any form permitted without written permission of NFPA. For inquires or to report unauthorized use, contact licensing@nfpa.org.



## Technical Committee on Lightning Protection

**John M. Tobias,** *Chair*
U.S. Department of the Army, MD [U]

**Christopher Batchelor,** U.S. Department of the Navy, MD [E]
**Gerard M. Berger,** CNRS - Supelec, France [SE]
**Matthew Caie,** ERICO, Inc., OH [M]
**Joanie A. Campbell,** U.S. Department of the Air Force, FL [E]
**Josephine Covino,** U.S. Department of Defense, VA [E]
**Ignacio T. Cruz,** Cruz Associates, Inc., VA [SE]
**Robert F. Daley,** Los Alamos National Laboratory, NM [U]
**Joseph P. DeGregoria,** UL LLC, NY [RT]
**Douglas J. Franklin,** Thompson Lightning Protection Inc., MN [M]
**Mitchell Guthrie,** Consulting Engineer, NC [SE]
**Thomas R. Harger,** Harger Lightning Protection Inc., IL [M]
**William E. Heary,** Heary Brothers Lightning Protection, NY [IM]
**Paul Jacques,** Nuclear Service Organization, DE [I]
**Carl S. Johnson II,** AVCON, Inc., FL [U]
**Bruce A. Kaiser,** Lightning Master Corporation, FL [M]
**Eduardo Mariani,** CIMA Ingenieria S.R.L, Argentina [SE]
**David E. McAfee,** Babcock & Wilcox Y-12, LLC, TN [U]
**Robley B. Melton, Jr.,** CSI Telecommunications, GA [U]
Rep. Alliance for Telecommunications Industry Solutions
**Victor Minak,** ExxonMobil Research & Engineering Company, VA [U]
Rep. American Petroleum Institute
**Mark P. Morgan,** East Coast Lightning Equipment, Inc., CT [M]
**Luke Pettross,** Lightning Eliminators & Consultants Inc., CO [M]
**Christine T. Porter,** Intertek Testing Services, WA [RT]
**Terrance K. Portfleet,** Michigan Lightning Protection Inc., MI [IM]
Rep. United Lightning Protection Association, Inc.
**Robert W. Rapp,** National Lightning Protection Corporation, CO [M]
**Lon D. Santis,** Institute of Makers of Explosives, DC [U]
**Russell Stubbs,** Qwest Communications, CO [U]
**Harold Van Sickle III,** Lightning Protection Institute, MO [IM]

### Alternates

**Charles H. Ackerman,** East Coast Lightning Equipment Inc., CT [M]
(Alt. to M. P. Morgan)
**Samuel Barrack,** Babcock & Wilcox Y-12, LLC, TN [U]
(Alt. to D. E. McAfee)
**Richard W. Bouchard,** UL LLC, CO [RT]
(Alt. to J. P. DeGregoria)
**Peter A. Carpenter,** Lightning Eliminators & Consultants Inc., CO [M]
(Alt. to L. Pettross)
**Mark S. Harger,** Harger Lightning Protection, Inc., FL [M]
(Alt. to T. R. Harger)
**Kenneth P. Heary,** Heary Brothers Lightning Protection, NY [IM]
(Alt. to W. E. Heary)
**Stephen Humeniuk,** Warren Lightning Rod Company, NJ [IM]
(Alt. to T. K. Portfleet)
**Morris Kline,** HMT Inc., TX [U]
(Alt. to V. Minak)
**David John Leidel,** Halliburton Energy Services, TX [U]
(Alt. to L. D. Santis)
**Brian Liederbach,** ERICO, Inc., OH [M]
(Alt. to M. Caie)
**Allan P. Steffes,** Thompson Lightning Protection Inc., MN [M]
(Alt. to D. J. Franklin)
**Paul R. Svendsen,** National Lightning Protection Corporation, CO [M]
(Alt. to R. W. Rapp)
**Philip E. Youtsey,** Guardian Equipment Company, MI [IM]
(Alt. to H. Van Sickle III)

**Richard J. Roux,** NFPA Staff Liaison

*This list represents the membership at the time the Committee was balloted on the final text of this edition. Since that time, changes in the membership may have occurred. A key to classifications is found at the back of the document.*

NOTE: Membership on a committee shall not in and of itself constitute an endorsement of the Association or any document developed by the committee on which the member serves.

**Committee Scope:** This Committee shall have primary responsibility for documents on the protection from lightning of buildings and structures, recreation and sports areas, and any other situations involving danger from lightning to people or property, except those concepts utilizing early streamer emission air terminals. The protection of electric generating, transmission, and distribution systems is not within the scope of this Committee.

Copyright 2014 National Fire Protection Association (NFPA). Licensed, by agreement, for individual use and download on October 4, 2014 to LEADER and READER for designated user PATTARAPORN SRITRAKOOL. No other reproduction or transmission in any form permitted without written permission of NFPA. For inquires or to report unauthorized use, contact licensing@nfpa.org.



## Contents


**Chapter 1 Administration** ..... **780– 7**
1.1 Scope ..... **780– 7**
1.2 Purpose ..... **780– 7**
1.3 Listed, Labeled, or Approved Components ..... **780– 7**
1.4 Retroactivity ..... **780– 7**
1.5 Mechanical Execution of Work ..... **780– 7**
1.6 Maintenance ..... **780– 7**
1.7 Units of Measurement ..... **780– 7**

**Chapter 2 Referenced Publications** ..... **780– 7**
2.1 General ..... **780– 7**
2.2 NFPA Publications ..... **780– 7**
2.3 Other Publications ..... **780– 7**
2.4 References for Extracts in Mandatory Sections ..... **780– 8**

**Chapter 3 Definitions** ..... **780– 8**
3.1 General ..... **780– 8**
3.2 NFPA Official Definitions ..... **780– 8**
3.3 General Definitions ..... **780– 8**

**Chapter 4 General Requirements** ..... **780–10**
4.1 General ..... **780–10**
4.2 Materials ..... **780–10**
4.3 Corrosion Protection ..... **780–11**
4.4 Mechanical Damage or Displacement ..... **780–11**
4.5 Use of Aluminum ..... **780–11**
4.6 Strike Termination Devices ..... **780–11**
4.7 Strike Termination Devices on Roofs ..... **780–13**
4.8 Zones of Protection ..... **780–16**
4.9 Conductors ..... **780–18**
4.10 Conductor Fasteners ..... **780–20**
4.11 Masonry Anchors ..... **780–20**
4.12 Connector Fittings ..... **780–20**
4.13 Grounding Electrodes ..... **780–20**
4.14 Common Bonding of Grounded Systems ..... **780–21**
4.15 Potential Equalization ..... **780–22**
4.16 Bonding of Metal Bodies ..... **780–22**
4.17 Metal Antenna Masts and Supports ..... **780–23**
4.18 Concealed Systems ..... **780–23**
4.19 Structural Metallic Systems ..... **780–24**
4.20 Surge Protection ..... **780–24**

**Chapter 5 Protection for Miscellaneous Structures and Special Occupancies** ..... **780–25**
5.1 General ..... **780–25**
5.2 Masts, Spires, Flagpoles ..... **780–25**
5.3 Grain-, Coal-, and Coke-Handling and -Processing Structures ..... **780–26**
5.4 Metal Towers and Tanks ..... **780–26**
5.5 Air-Inflated Structures ..... **780–26**
5.6 Concrete Tanks and Silos ..... **780–26**
5.7 Guyed Structures ..... **780–26**
5.8 Roof Top Helipads ..... **780–26**

**Chapter 6 Protection for Heavy-Duty Stacks** ..... **780–26**
6.1 General ..... **780–26**
6.2 Materials ..... **780–27**
6.3 Strike Termination Devices ..... **780–27**
6.4 Conductors ..... **780–27**
6.5 Fasteners ..... **780–27**
6.6 Splices ..... **780–27**
6.7 Reinforced Concrete Stacks ..... **780–27**
6.8 Bonding of Metal Bodies ..... **780–27**
6.9 Grounding ..... **780–28**
6.10 Metal Stacks ..... **780–28**
6.11 Metal Guy Wires and Cables ..... **780–28**

**Chapter 7 Protection for Structures Containing Flammable Vapors, Flammable Gases, or Liquids That Can Give Off Flammable Vapors** ..... **780–28**
7.1 Reduction of Damage ..... **780–28**
7.2 Fundamental Principles of Protection ..... **780–28**
7.3 Protective Measures ..... **780–28**
7.4 Protection of Specific Classes of Structures ..... **780–29**

**Chapter 8 Protection of Structures Housing Explosive Materials** ..... **780–31**
8.1 Application ..... **780–31**
8.2 General ..... **780–31**
8.3 Types of Lightning Protection ..... **780–31**
8.4 Grounding ..... **780–32**
8.5 Bonding ..... **780–33**
8.6 Surge Protection ..... **780–33**
8.7 Protection for Specific Facilities ..... **780–33**
8.8 Metallic Fences ..... **780–34**
8.9 Maintenance and Inspection ..... **780–34**
8.10 Inspection, Testing, and Maintenance ..... **780–34**

**Chapter 9 Protection for Wind Turbines** ..... **780–35**
9.1 General ..... **780–35**
9.2 Fundamental Principle of Protection ..... **780–35**
9.3 Protection of Electrical and Mechanical Control Systems ..... **780–35**
9.4 Grounding ..... **780–35**

**Chapter 10 Protection for Watercraft** ..... **780–35**
10.1 General ..... **780–35**
10.2 Materials ..... **780–35**
10.3 Strike Termination ..... **780–36**
10.4 Conductors ..... **780–36**
10.5 Grounding ..... **780–38**

Copyright 2014 National Fire Protection Association (NFPA). Licensed, by agreement, for individual use and download on October 4, 2014 to LEADER and READER for designated user PATTARAPORN SRITRAKOOL. No other reproduction or transmission in any form permitted without written permission of NFPA. For inquires or to report unauthorized use, contact licensing@nfpa.org.



**Chapter 11 Protection for Airfield Lighting Circuits** ..... **780**–38
11.1 General ..... **780**–38
11.2 Application ..... **780**–38
11.3 Purpose ..... **780**–39
11.4 Installation of Airfield Lighting Counterpoise System ..... **780**–39

**Chapter 12 Protection for Solar Arrays** ..... **780**–41
12.1 General ..... **780**–41
12.2 Fundamental Principles of Protection ..... **780**–41
12.3 Strike Termination Devices ..... **780**–41
12.4 Protection of Electrical and Mechanical Systems ..... **780**–42
12.5 Grounding ..... **780**–42

**Annex A Explanatory Material** ..... **780**–43

**Annex B Principles of Lightning Protection** ..... **780**–57

**Annex C Explanation of Bonding Principles** ..... **780**–60

**Annex D Inspection and Maintenance of Lightning Protection Systems** ..... **780**–61

**Annex E Ground Measurement Techniques** ..... **780**–62

**Annex F Protection for Trees** ..... **780**–63

**Annex G Protection for Picnic Grounds, Playgrounds, Ball Parks, and Other Open Places** ..... **780**–64

**Annex H Protection for Livestock in Fields** ..... **780**–65

**Annex I Protection for Parked Aircraft** ..... **780**–65

**Annex J Reserved** ..... **780**–66

**Annex K Reserved** ..... **780**–66

**Annex L Lightning Risk Assessment** ..... **780**–66

**Annex M Guide for Personal Safety from Lightning** ..... **780**–78

**Annex N Reserved** ..... **780**–79

**Annex O Informational References** ..... **780**–79

**Index** ..... **780**–81

Copyright 2014 National Fire Protection Association (NFPA). Licensed, by agreement, for individual use and download on October 4, 2014 to LEADER and READER for designated user PATTARAPORN SRITRAKOOL. No other reproduction or transmission in any form permitted without written permission of NFPA. For inquires or to report unauthorized use, contact licensing@nfpa.org.



# NFPA 780

## Standard for the

# Installation of Lightning Protection Systems

## 2014 Edition

***IMPORTANT NOTE: This NFPA document is made available for use subject to important notices and legal disclaimers. These notices and disclaimers appear in all publications containing this document and may be found under the heading "Important Notices and Disclaimers Concerning NFPA Documents." They can also be obtained on request from NFPA or viewed at www.nfpa.org/disclaimers.***

NOTICE: An asterisk (*) following the number or letter designating a paragraph indicates that explanatory material on the paragraph can be found in Annex A.

Changes other than editorial are indicated by a vertical rule beside the paragraph, table, or figure in which the change occurred. These rules are included as an aid to the user in identifying changes from the previous edition. Where one or more complete paragraphs have been deleted, the deletion is indicated by a bullet (•) between the paragraphs that remain.

A reference in brackets [ ] following a section or paragraph indicates material that has been extracted from another NFPA document. As an aid to the user, the complete title and edition of the source documents for extracts in mandatory sections of the document are given in Chapter 2 and those for extracts in informational sections are given in Annex O. Extracted text may be edited for consistency and style and may include the revision of internal paragraph references and other references as appropriate. Requests for interpretations or revisions of extracted text shall be sent to the technical committee responsible for the source document.

Information on referenced publications can be found in Chapter 2 and Annex O.

## Chapter 1 Administration

### 1.1 Scope.

**1.1.1** This document shall cover traditional lightning protection system installation requirements for the following:

(1) Ordinary structures
(2) Miscellaneous structures and special occupancies
(3) Heavy-duty stacks
(4) Structures containing flammable vapors, flammable gases, or liquids that can give off flammable vapors
(5) Structures housing explosive materials
(6) Wind turbines
(7) Watercraft
(8) Airfield lighting circuits
(9) Solar arrays

**1.1.2*** This document shall address lightning protection of the structure but not the equipment or installation requirements for electric generating, transmission, and distribution systems except as given in Chapter 9 and Chapter 12.

**1.1.3** This document shall not cover lightning protection system installation requirements for early streamer emission systems or charge dissipation systems.

**1.2 Purpose.** The purpose of this standard shall be to provide for the safeguarding of persons and property from hazards arising from exposure to lightning.

**1.3 Listed, Labeled, or Approved Components.** Where fittings, devices, or other components required by this standard are available as listed or labeled, such components shall be used.

**1.4 Retroactivity.** The provisions of this standard reflect a consensus of what is necessary to provide an acceptable degree of protection from the hazards addressed in this standard at the time the standard was issued.

**1.4.1** Unless otherwise specified, the provisions of this standard shall not apply to facilities, equipment, structures, or installations that existed or were approved for construction or installation prior to the effective date of the standard. Where specified in this standard, the provisions of this standard shall be retroactive.

**1.4.2** In those cases where the authority having jurisdiction determines that the existing situation presents an unacceptable degree of risk, the authority having jurisdiction shall be permitted to apply retroactively any portions of this standard deemed appropriate.

**1.4.3** The retroactive requirements of this standard shall be permitted to be modified if their application clearly would be impractical in the judgment of the authority having jurisdiction, and only where it is clearly evident that a reasonable degree of safety is provided.

### 1.5 Mechanical Execution of Work.

**1.5.1** Lightning protection systems shall be installed in a neat and workmanlike manner.

**1.5.2*** The individual(s) responsible for the installation shall be certified for fitness on the requirements of this standard by the authority having jurisdiction.

**1.6* Maintenance.** Recommended guidelines for the maintenance of the lightning protection system shall be provided to the owner at the completion of installation.

### 1.7 Units of Measurement.

**1.7.1** Measurements shall be presented in inch-pound units followed by the equivalent value presented in SI units in parentheses.

**1.7.2** A given equivalent value shall be approximate.

## Chapter 2 Referenced Publications

**2.1 General.** The documents or portions thereof listed in this chapter are referenced within this standard and shall be considered part of the requirements of this document.

**2.2 NFPA Publications.** National Fire Protection Association, 1 Batterymarch Park, Quincy, MA 02169-7471.

*NFPA 70®, National Electrical Code®,* 2014 edition.

### 2.3 Other Publications.

**2.3.1 ISO Publications.** International Organization for Standardization, ISO Central Secretariat, 1, ch. de la Voie-Creuse, CP 56, CH-1211 Geneva 20, Switzerland.

ISO 1496, *Series 1 freight containers — Specification and testing — Part 1: General cargo containers for general purposes,* 1990.

Copyright 2014 National Fire Protection Association (NFPA). Licensed, by agreement, for individual use and download on October 4, 2014 to LEADER and READER for designated user PATTARAPORN SRITRAKOOL. No other reproduction or transmission in any form permitted without written permission of NFPA. For inquires or to report unauthorized use, contact licensing@nfpa.org.



**2.3.2 UL Publications.** Underwriters Laboratories Inc., 333 Pfingsten Road, Northbrook, IL 60062-2096.

ANSI/UL 1449, *Standard for Safety for Surge Protective Devices*, 3rd edition, September 29, 2006, with revisions through July 11, 2012.

**2.3.3 Other Publications.**

*Merriam-Webster's Collegiate Dictionary*, 11th edition, Merriam-Webster, Inc., Springfield, MA, 2003.

**2.4 References for Extracts in Mandatory Sections.**

*NFPA 70®, National Electrical Code®,* 2014 edition.
NFPA 115, *Standard for Laser Fire Protection,* 2012 edition.

## Chapter 3 Definitions

**3.1 General.** The definitions contained in this chapter shall apply to the terms used in this standard. Where terms are not defined in this chapter or within another chapter, they shall be defined using their ordinarily accepted meanings within the context in which they are used. *Merriam-Webster's Collegiate Dictionary,* 11th edition, shall be the source for the ordinarily accepted meaning.

**3.2 NFPA Official Definitions.**

**3.2.1* Approved.** Acceptable to the authority having jurisdiction.

**3.2.2* Authority Having Jurisdiction (AHJ).** An organization, office, or individual responsible for enforcing the requirements of a code or standard, or for approving equipment, materials, an installation, or a procedure.

**3.2.3 Labeled.** Equipment or materials to which has been attached a label, symbol, or other identifying mark of an organization that is acceptable to the authority having jurisdiction and concerned with product evaluation, that maintains periodic inspection of production of labeled equipment or materials, and by whose labeling the manufacturer indicates compliance with appropriate standards or performance in a specified manner.

**3.2.4* Listed.** Equipment, materials, or services included in a list published by an organization that is acceptable to the authority having jurisdiction and concerned with evaluation of products or services, that maintains periodic inspection of production of listed equipment or materials or periodic evaluation of services, and whose listing states that either the equipment, material, or service meets appropriate designated standards or has been tested and found suitable for a specified purpose.

**3.2.5 Shall.** Indicates a mandatory requirement.

**3.2.6 Should.** Indicates a recommendation or that which is advised but not required.

**3.2.7 Standard.** A document, the main text of which contains only mandatory provisions using the word "shall" to indicate requirements and which is in a form generally suitable for mandatory reference by another standard or code or for adoption into law. Nonmandatory provisions are not to be considered a part of the requirements of a standard and shall be located in an appendix, annex, footnote, informational note, or other means as permitted in the *Manual of Style for NFPA Technical Committee Documents.*

**3.3 General Definitions.**

**3.3.1* Air Terminal.** A strike termination device that is a receptor for attachment of flashes to the lightning protection system and is listed for the purpose.

**3.3.2 Bonding.** An electrical connection between an electrically conductive object and a component of a lightning protection system that is intended to significantly reduce potential differences created by lightning currents.

**3.3.3* Cable.** A conductor formed of a number of wires stranded together.

**3.3.4 Catenary Lightning Protection System.** A lightning protection system consisting of one or more overhead ground wires.

**3.3.5 Chimney.** A construction containing one or more flues that does not meet the criteria defined for heavy-duty stack.

**3.3.6* Combination Waveform Generator.** A surge generator with a 2-ohm internal impedance producing a 1.2/50 µs open circuit voltage and an 8/20 µs short-circuit current waveshape.

**3.3.7 Conductor.**

**3.3.7.1** ***Bonding Conductor.*** A conductor used for potential equalization between grounded metal bodies or electrically conductive objects and a lightning protection system.

**3.3.7.2** ***Counterpoise Conductor.*** A bare underground electrical conductor providing an area of protection from the effects of lightning for underground raceway(s) or cable(s).

**3.3.7.3** ***Down Conductor.*** A main conductor used to connect roof conductors to grounding electrodes.

**3.3.7.4** ***Loop Conductor.*** A conductor encircling a structure that is used to interconnect grounding electrodes, main conductors, or other electrically conductive bodies.

**3.3.7.5*** ***Main Conductor.*** A conductor intended to be used to carry lightning currents between strike termination devices and grounding electrodes.

**3.3.7.6** ***Roof Conductor.*** A main conductor used to interconnect strike termination devices.

**3.3.8 Copper-Clad Steel.** Steel with a coating of copper bonded to it.

**3.3.9 Discharge Current.**

**3.3.9.1** ***Maximum Discharge Current ($I_{max}$).*** The maximum instantaneous value of the current through the surge protective device (SPD) having an 8/20 µs waveform.

**3.3.9.2** ***Nominal Discharge Current ($I_n$).*** Peak value of 8/20 µs current waveform selected by the manufacturer for which an SPD remains functional after 15 surges.

**3.3.10 Fastener.** An attachment device used to secure the conductor to the structure.

**3.3.11 Flame Protection.** Self-closing gauge hatches, vapor seals, pressure-vacuum breather valves, flame arresters, or other effective means to minimize the possibility of flame entering the vapor space of a tank.

**3.3.12* Flammable Air-Vapor Mixtures.** Flammable vapors mixed with air in proportions that will cause the mixture to burn rapidly when ignited.

**3.3.13 Flammable Vapors.** A concentration of constituents in air that exceeds 10 percent of its lower flammable limit (LFL). [**115,** 2012]

Copyright 2014 National Fire Protection Association (NFPA). Licensed, by agreement, for individual use and download on October 4, 2014 to LEADER and READER for designated user PATTARAPORN SRITRAKOOL. No other reproduction or transmission in any form permitted without written permission of NFPA. For inquires or to report unauthorized use, contact licensing@nfpa.org.



**3.3.14 Flash Point.** The minimum temperature at which a liquid or a solid emits vapor sufficient to form an ignitible mixture with air near the surface of the liquid or the solid.

**3.3.15 Gastight.** Describes a structure so constructed that gas or air cannot enter or leave the structure except through vents or piping provided for the purpose.

**3.3.16 Grounded (Grounding).** Connected (connecting) to ground or to a conductive body that extends the ground connection. [**70,** 2014]

**3.3.17 Grounding Electrode.** The portion of a lightning protection system, such as a ground rod, ground plate electrode, or ground conductor, that is installed for the purpose of providing electrical contact with the earth.

**3.3.18 Hazard Division 1.4.** Ammunition and explosives that produce a moderate fire with no significant blast or fragment hazards.

**3.3.19 Headwall.** A retaining wall at the outlet of an earth-covered magazine.

**3.3.20 Heavy-Duty Stack.** A smoke or vent stack with a flue that has a cross-sectional area of the flue greater than 500 in.$^2$ (0.3 m$^2$) and a height greater than 75 ft (23 m).

**3.3.21 ISO Container.** Intermodal container designed to transport freight by ship, truck, or rail built in accordance with ISO 1496, *Series 1 Freight containers — Specification and testing — Part 1: General cargo containers for general purposes.*

**3.3.22* Light Base.** An enclosure used as a mounting base for airport light fixtures and assemblies. The unit serves as an isolation transformer housing and as an electrical junction box or both. The light base is cylindrically shaped with a closed bottom, provisions for cable or conduit entry and exit, provisions for grounding and provided with a top flange to mate with the fixture or cover.

**3.3.23 Lightning Electromagnetic Impulse (LEMP).** Electromagnetic effects of lightning current, which includes conducted surges as well as radiated impulse electromagnetic field effects.

**3.3.24* Lightning Protection System.** A complete system of strike termination devices, conductors (which could include conductive structural members), grounding electrodes, interconnecting conductors, surge protective devices, and other connectors and fittings required to complete the system.

**3.3.25 Liquid.**

**3.3.25.1** ***Class I Flammable Liquid.*** Any liquid that has a closed-cup flash point below 100°F (37.8°C) and a Reid vapor pressure not exceeding an absolute pressure of 40 psi (276 kPa) at 100°F (37.8°C).

**3.3.25.2** ***Combustible Liquid.*** Any liquid that has a closed-cup flash point at or above 100°F (37.8°C).

**3.3.26 Magazine.** A structure specifically designed to store ammunition and explosives.

**3.3.26.1** ***Earth-Covered Magazine (ECM).*** An aboveground, earth-covered structure with a minimum of 2 ft (0.6 m) soil cover depth and a slope of 2 horizontal and 1 vertical.

**3.3.26.2** ***Portable Magazine.*** A magazine that can be moved from one location to another.

**3.3.27 Magnetically Shielded.** Enclosing all or part of an object in a metallic grid or continuous screen to reduce failures of electrical and electronic system components.

**3.3.28 Materials.**

**3.3.28.1* *Class I Materials.*** Lightning conductors, air terminals, grounding electrodes, and associated fittings required for the protection of structures not exceeding 75 ft (23 m) in height.

**3.3.28.2* *Class II Materials.*** Lightning conductors, air terminals, grounding electrodes, and associated fittings required for the protection of structures exceeding 75 ft (23 m) in height.

**3.3.28.3** ***Explosive Materials.*** Materials, including explosives, blasting agents, and detonators, that are authorized for transportation by the Department of Transportation or the Department of Defense as explosive materials.

**3.3.29* Mounting Stake.** A steel angle iron driven vertically into the earth with provisions for the mounting of an elevated airfield lighting fixture.

**3.3.30 Pavement.** A hard, layered surface constructed to provide support for the loads imposed by airplanes and to produce a firm, stable, smooth, all-year, all-weather surface free of debris or other particles blown or picked up by propeller wash or jet blast.

**3.3.30.1** ***Full Strength Pavement.*** Pavement designed to provide support for an aircraft for continual operations of the aircraft.

**3.3.30.2** ***Shoulder Pavement.*** Pavement designed to provide support for an aircraft for unintentional or emergency operations of the aircraft.

**3.3.31* Raceway.** An enclosed channel of metal or nonmetallic materials designed expressly for holding wires, cables, or busbars, with additional functions as permitted in this [standard]. Raceways include, but are not limited to, rigid metal conduit, rigid nonmetallic conduit, intermediate metal conduit, liquidtight flexible conduit, flexible metallic tubing, flexible metal conduit, electrical nonmetallic tubing, electrical metallic tubing, underfloor raceways, cellular concrete floor raceways, cellular metal floor raceways, surface raceways, wireways, and busways.

**3.3.32 Sideflash.** An electrical spark, caused by differences of potential, that occurs between conductive metal bodies or between conductive metal bodies and a component of a lightning protection system or ground.

**3.3.33 Spark Gap.** Any short air space between two conductors that are electrically insulated from or remotely electrically connected to each other.

**3.3.34 Strike Termination Device.** A conductive component of the lightning protection system capable of receiving a lightning strike and providing a connection to a path to ground. Strike termination devices include air terminals, metal masts, permanent metal parts of structures as described in 4.6.1.4, and overhead ground wires installed in catenary lightning protection systems.

**3.3.35 Striking Distance.** The distance over which the final breakdown of the initial lightning stroke to ground or to a grounded object occurs.

**3.3.36 Structure.**

**3.3.36.1** ***Metal-Clad Structure.*** A structure with sides or roof, or both, covered with metal.

**3.3.36.2** ***Metal-Framed Structure.*** A structure with electrically continuous structural members of sufficient size to provide an electrical path equivalent to that of lightning conductors.

Copyright 2014 National Fire Protection Association (NFPA). Licensed, by agreement, for individual use and download on October 4, 2014 to LEADER and READER for designated user PATTARAPORN SRITRAKOOL. No other reproduction or transmission in any form permitted without written permission of NFPA. For inquires or to report unauthorized use, contact licensing@nfpa.org.



**3.3.37 Surge.** A transient wave of current, potential, or power in an electric circuit. Surges do not include longer duration temporary overvoltages (TOV) consisting of an increase in the power frequency voltage for several cycles.

**3.3.38 Surge Protective Device (SPD).** A device intended for limiting surge voltages on equipment by diverting or limiting surge current that comprises at least one nonlinear component.

**3.3.39 Transient.** A subcycle disturbance in the ac waveform that is evidenced by a sharp, brief discontinuity of the waveform. It can be of either polarity and can be additive to, or subtractive from, the nominal waveform.

**3.3.40 Turf.** Grass, stabilized soil, asphalt, or any other hard surface not intended as a paved shoulder, installed from the edge of the runway or taxiway full strength pavement to just outside the airfield lighting circuits.

**3.3.41 Vapor Opening.** An opening through a tank shell or roof that is above the surface of the stored liquid and that is provided for tank breathing, tank gauging, fire fighting, or other operating purposes.

**3.3.42 Voltage.**

**3.3.42.1** ***Maximum Continuous Operating Voltage (MCOV).*** The maximum designated rms value of the power frequency voltage that can be continuously applied to the mode of protection of a surge protective device (SPD).

**3.3.42.2** ***Measured Limiting Voltage (MLV).*** Maximum magnitude of voltage that is measured across the terminals of the surge protective device (SPD) during the application of impulses of specified waveshape and amplitude.

**3.3.42.3** ***Nominal System Voltage.*** The nominal voltage (rms) of the power frequency supply.

**3.3.42.4** ***Normal Operating Voltage.*** The normal ac power frequency voltage rating, as specified by the manufacturer, to which the SPD may be connected.

**3.3.43* Voltage Protection Rating (VPR).** A rating (or ratings) selected by the manufacturer based on the measured limiting voltage determined when the SPD is subjected to a combination waveform with an open circuit voltage of 6 kV and a short-circuit current of 3 kA.

**3.3.44 Watercraft.** All forms of boats and vessels up to 300 gross tons (272 metric tons) used for pleasure or commercial purposes, but excluding seaplanes, hovercraft, vessels with a cargo of flammable liquids, and submersible vessels.

**3.3.45 Zone of Protection.** The space adjacent to a lightning protection system that is substantially immune to direct lightning flashes.

## Chapter 4 General Requirements

**4.1 General.** This chapter provides general requirements for the protection of structures against lightning.

**4.1.1 Material Class Requirements.**

**4.1.1.1*** Structures shall be protected according to 4.1.1.1.1 or 4.1.1.1.2.

**4.1.1.1.1** Structures not exceeding 75 ft (23 m) in height shall be protected with Class I materials as shown in Table 4.1.1.1.1.

**4.1.1.1.2** Structures exceeding 75 ft (23 m) in height shall be protected with Class II materials as shown in Table 4.1.1.1.2.

**4.1.1.2** If part of a structure exceeds 75 ft (23 m) in height (e.g., a steeple) and the remaining portion does not exceed 75 ft (23 m) in height, the requirements for Class II air terminals and conductors shall apply only to that portion exceeding 75 ft (23 m) in height.

**4.1.1.3** Class II conductors from the higher portion shall be extended to ground and shall be interconnected with the balance of the system.

**4.2 Materials.** Protection systems shall be made of materials that are resistant to corrosion or protected against corrosion.

**4.2.1** Combinations of materials that form electrolytic couples of such a nature that, in the presence of moisture, corrosion is accelerated shall not be used.

**4.2.2** One or more of the materials in 4.2.2.1 through 4.2.2.3 shall be used.

**4.2.2.1 Copper.** Copper shall be of the grade required for commercial electrical work and shall be of 95 percent conductivity when annealed.

**4.2.2.2 Copper Alloys.** Copper alloy shall be as resistant to corrosion as is copper.

**Table 4.1.1.1.1 Minimum Class I Material Requirements**

| | | Copper | | Aluminum | |
|---|---|---|---|---|---|
| **Type of Conductor** | **Parameter** | **U.S.** | **SI** | **U.S.** | **SI** |
| Air terminal, solid | Diameter | ⅜ in. | 9.5 mm | ½ in. | 12.7 mm |
| Air terminal, tubular | Diameter | ⅝ in. | 15.9 mm | ⅝ in. | 15.9 mm |
| | Wall thickness | 0.033 in. | 0.8 mm | 0.064 in. | 1.63 mm |
| Main conductor, cable | Size each strand | 17 AWG | 1.04 $mm^2$ | 14 AWG | 2.08 $mm^2$ |
| | Weight per length | 187 lb/1000 ft | 278 g/m | 95 lb/1000 ft | 141 g/m |
| | Cross-section area | 57,400 cir. mils | 29 $mm^2$ | 98,600 cir. mils | 50 $mm^2$ |
| Bonding conductor, cable (solid or stranded) | Size each strand | 17 AWG | 1.04 $mm^2$ | 14 AWG | 2.08 $mm^2$ |
| | Cross-section area | 26,240 cir. mils | 13.3 $mm^2$ | 41,100 cir. mils | 20.8 $mm^2$ |
| Bonding conductor, solid strip | Thickness | 0.051 in. | 1.30 mm | 0.064 in. | 1.63 mm |
| | Width | ½ in. | 12.7 mm | ½ in. | 12.7 mm |
| Main conductor, solid strip | Thickness | 0.051 in. | 1.30 mm | 0.064 in. | 1.63 mm |
| | Cross-section area | 57,400 cir. mils | 29 $mm^2$ | 98,600 cir. mils | 50 $mm^2$ |

Copyright 2014 National Fire Protection Association (NFPA). Licensed, by agreement, for individual use and download on October 4, 2014 to LEADER and READER for designated user PATTARAPORN SRITRAKOOL. No other reproduction or transmission in any form permitted without written permission of NFPA. For inquires or to report unauthorized use, contact licensing@nfpa.org.



**Table 4.1.1.1.2 Minimum Class II Material Requirements**

| Type of Conductor | Parameter | Copper | | Aluminum | |
|---|---|---|---|---|---|
| | | U.S. | SI | U.S. | SI |
| Air terminal, solid | Diameter | ½ in. | 12.7 mm | ⅝ in. | 15.9 mm |
| Main conductor, cable | Size each strand | 15 AWG | 1.05 $mm^2$ | 13 AWG | 2.62 $mm^2$ |
| | Weight per length | 375 lb/1000 ft | 558 g/m | 190 lb/1000 ft | 283 g/m |
| | Cross-section area | 115,000 cir. mils | 58 $mm^2$ | 192,000 cir. mils | 97 $mm^2$ |
| Bonding conductor, cable (solid or stranded) | Size each strand | 17 AWG | 1.04 $mm^2$ | 14 AWG | 2.08 $mm^2$ |
| | Cross-section area | 26,240 cir. mils | 13.2 $mm^2$ | 41,100 cir. mils | 20.8 $mm^2$ |
| Bonding conductor, solid strip | Thickness | 0.051 in. | 1.30 mm | 0.064 in. | 1.63 mm |
| | Width | ½ in. | 12.7 mm | ½ in. | 12.7 mm |
| Main conductor, solid strip | Thickness | 0.064 in. | 1.63 mm | 0.1026 in. | 2.61 mm |
| | Cross-section area | 115,000 cir. mils | 58 $mm^2$ | 192,000 cir. mils | 97 $mm^2$ |

**4.2.2.3 Aluminum.**

**4.2.2.3.1** Aluminum shall not be used where contact with the earth is possible or where rapid deterioration is possible.

**4.2.2.3.2** Conductors shall be of electrical-grade aluminum.

**4.2.3** Copper lightning protection materials shall not be installed on or in contact with aluminum roofing, aluminum siding, or other aluminum surfaces.

**4.2.4** Aluminum lightning protection materials shall not be installed on or in contact with copper surfaces.

**4.3 Corrosion Protection.**

**4.3.1** Protection shall be provided against deterioration of lightning protection components due to local conditions.

**4.3.2** Copper components installed within 24 in. (600 mm) of the top of a chimney or vent emitting corrosive gases shall be protected by a hot-dipped lead or tin coating.

**4.3.3 Connectors and Fittings.**

**4.3.3.1** Connectors and fittings shall be compatible for use with the conductor and the surfaces on which they are installed.

**4.3.3.2** Bimetallic connectors and fittings shall be used for splicing or bonding dissimilar metals.

**4.4 Mechanical Damage or Displacement.**

**4.4.1** Any part of a lightning protection system that is subject to mechanical damage or displacement shall be protected with a protective molding or covering.

**4.4.2** Where metal pipe or tubing is used around the conductor, the conductor shall be bonded to the pipe or tubing at both ends.

**4.5 Use of Aluminum.** Aluminum systems shall be installed in accordance with other applicable sections and 4.5.1 through 4.5.3.

**4.5.1** Aluminum lightning protection equipment shall not be installed on or in direct contact with copper roofing materials or other copper surfaces, or where exposed to runoff from copper surfaces.

**4.5.2** Aluminum materials shall not be used within 18 in. (460 mm) of the point where the lightning protection system conductor comes into contact with the earth.

**4.5.2.1** Fittings used for the connection of aluminum down conductors to copper or copper-clad grounding equipment shall be of the bimetallic type.

**4.5.2.2** Bimetallic connectors shall be installed not less than 18 in. (460 mm) above earth level.

**4.5.3** An aluminum conductor shall not be attached to a surface coated with alkaline-base paint, embedded in concrete or masonry, or installed in a location subject to excessive moisture.

**4.6 Strike Termination Devices.**

**4.6.1 General.**

**4.6.1.1** Strike termination devices shall include air terminals, metal masts, permanent metal parts of structures as described in 4.6.1.4, and overhead ground wires.

**4.6.1.2** Combinations of these strike termination devices shall be permitted.

**4.6.1.3** Strike termination devices shall be provided where required by other sections of this standard.

**4.6.1.4** Metal parts of a structure that are exposed to direct lightning flashes and that have a metal thickness of 3/16 in. (4.8 mm) or greater shall only require connection to the lightning protection system in accordance with Section 4.8.

**4.6.1.5** Strike termination devices shall not be required for those parts of a structure located within a zone of protection.

**4.6.2 Air Terminals.**

**4.6.2.1*** The tip of an air terminal shall be not less than 10 in. (254 mm) above the object or area it is to protect, as shown in Figure 4.6.2.1.

**4.6.2.2 Air Terminal Support.**

**4.6.2.2.1** Air terminals shall be secured against overturning or displacement by one of the following methods:

(1) Attachment to the object to be protected
(2) Braces that are permanently and rigidly attached to the structure

**4.6.2.2.2** Air terminals exceeding 24 in. (600 mm) in height shall be supported at a point not less than one-half their height, as shown in Figure 4.6.2.2.2.

Copyright 2014 National Fire Protection Association (NFPA). Licensed, by agreement, for individual use and download on October 4, 2014 to LEADER and READER for designated user PATTARAPORN SRITRAKOOL. No other reproduction or transmission in any form permitted without written permission of NFPA. For inquires or to report unauthorized use, contact licensing@nfpa.org.



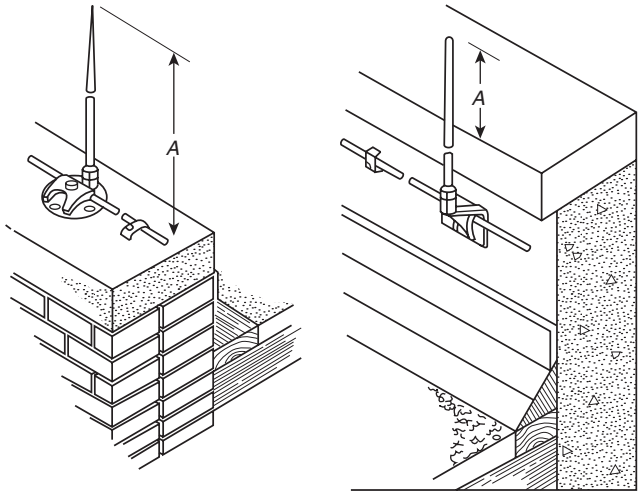


*A:* 10 in. (254 mm)
Note: Air terminal tip configurations can be sharp or blunt.

**FIGURE 4.6.2.1 Air Terminal Height.**

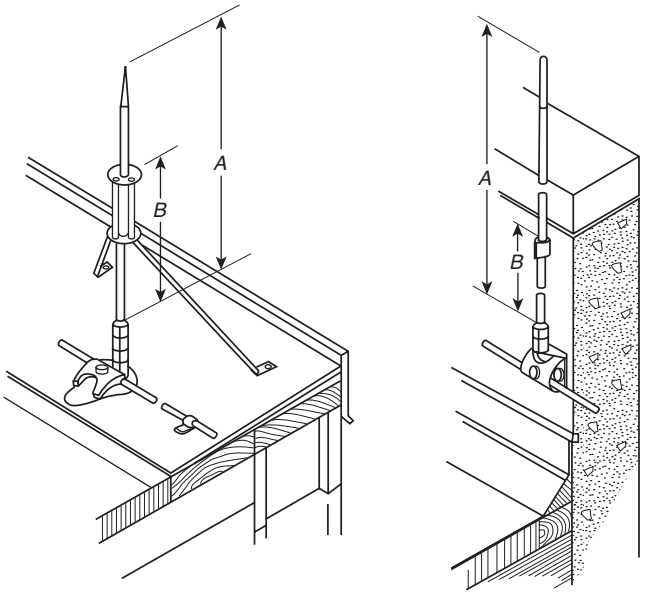


*A:* Air terminals over 24 in. (600 mm) high are supported.
*B:* Air terminal supports are located at a point not less than one-half the height of the air terminal.
Note: Air terminal tip configurations can be sharp or blunt.

**FIGURE 4.6.2.2.2 Air Terminal Support.**

**4.6.2.3 Ornaments.**

**4.6.2.3.1** An ornament or decoration on a freestanding, unbraced air terminal shall not present, in any plane, a wind-resistance area in excess of 20 in.$^2$ (0.01 m$^2$).

**4.6.2.3.2** The requirement of 4.6.2.3.1 shall permit the use of an ornamental ball 5 in. (127 mm) or less in diameter.

**4.6.3 Lightning Protection Masts.**

**4.6.3.1** Lightning protection masts shall be permitted to provide a zone of protection.

**4.6.3.2** Metal masts shall comply with 4.6.1.4 or be protected with a strike termination device.

**4.6.3.3** Nonmetallic masts shall be provided with at least one strike termination device.

**4.6.3.4** The top of the metallic mast shall have a metal thickness of 3⁄16 in. (4.8 mm) or greater or be provided with at least one strike termination device.

**4.6.3.5** The mast shall be permitted to serve as the down conductor, provided it is electrically continuous and has a wall thickness of 0.064 in. (1.63 mm) minimum.

**4.6.4 Overhead Ground Wires.**

**4.6.4.1** Overhead ground wires shall be permitted to provide a zone of protection.

**4.6.4.2** Overhead ground wire material shall be constructed of aluminum, copper, stainless steel, galvanized steel, or protected steel such as copper-clad, aluminum-clad, or aluminum conductor steel reinforced (ACSR).

**4.6.4.3** The overhead ground wire material shall be chosen to minimize corrosion from conditions at the site.

**4.6.4.4** The overhead ground wire shall be sized to have the same cross-sectional area as a main lightning conductor and shall be self-supporting with minimum sag under all conditions.

**4.6.5* Isolated Masts and Overhead Ground Wires.** To prevent sideflashes, the minimum distance between a mast or overhead ground wire and the structure to be protected shall be calculated.

**4.6.5.1** Sideflash distance from a point on a mast shall be calculated from the following formula:

$$D = \frac{h}{6}$$

where:
$D$ = sideflash distance from a mast
$h$ = height of structure (or object being calculated)

**4.6.5.2*** The sideflash distance from a point on an overhead ground wire shall be calculated as follows:

$$D = \frac{l}{6n}$$

where:
$D$ = sideflash distance from a mast or overhead ground wire
$l$ = length of lightning protection conductor between the nearest grounded point and the point being calculated (In the calculation of spacing from an overhead wire supported by a metal mast, it shall be permitted to consider the grounded point to be the attachment point on the metal mast where the overhead wire is electrically connected. For calculations of sideflash from a mast and the calculations for overhead wires supported by nonmetallic masts, the grounded point shall be considered the grounding system connection.)
$n$ = 1 where there is one overhead ground wire that exceeds 100 ft (30 m) in horizontal length

Copyright 2014 National Fire Protection Association (NFPA). Licensed, by agreement, for individual use and download on October 4, 2014 to LEADER and READER for designated user PATTARAPORN SRITRAKOOL. No other reproduction or transmission in any form permitted without written permission of NFPA. For inquires or to report unauthorized use, contact licensing@nfpa.org.



$n$ = 1.5 where there are one or two down conductors connected to the overhead ground wire spaced greater than 25 ft (7.6 m) and less than 100 ft (30 m) apart along the length of the overhead ground wire

$n$ = 2.25 where there are more than two down conductors connected to the overhead ground wires spaced more than 25 ft (7.6 m) apart and less than 100 ft (30 m) apart along the length of the overhead ground wire

**4.7 Strike Termination Devices on Roofs.**

**4.7.1 Roof Types.** The zone of protection for the following roof types shall include the roof and appurtenances where protected in accordance with Section 4.7:

(1) Pitched roofs
(2) Flat or gently sloping roofs
(3) Dormers
(4) Domed roofs
(5) Roofs with ridges, wells, chimneys, or vents

**4.7.1.1** Pitched roofs shall be defined as roofs having a span of 40 ft (12 m) or less and a slope ⅛ or greater and roofs having a span of more than 40 ft (12 m) and a slope ¼ or greater.

**4.7.1.2** A flat or gently sloping roof is defined as a roof with a slope less than a pitched roof.

**4.7.1.3** For the purposes of this standard, roof slopes shall be as shown in Figure 4.7.1.3.

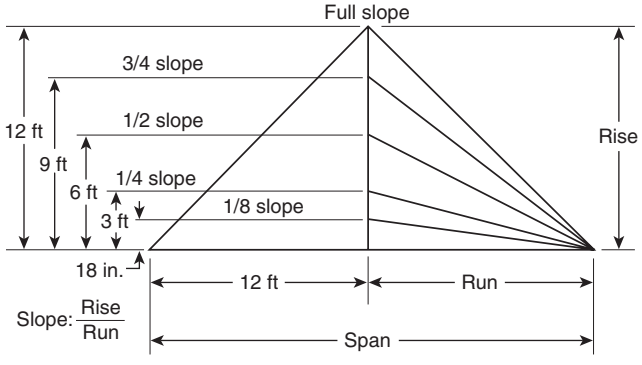


**FIGURE 4.7.1.3 Roof Slope.**

**4.7.1.4** Protection for typical roof types shall be as illustrated in Figure 4.7.1.4.

**4.7.1.5** Roof hips shall not be considered as ridges for the protection of these types of roofs.

**4.7.2* Location of Devices.**

**4.7.2.1** As shown in Figure 4.7.2.1, the distance from strike termination devices to ridge ends on pitched roofs or to edges and outside corners of flat or gently sloping roofs shall not exceed 2 ft (0.6 m).

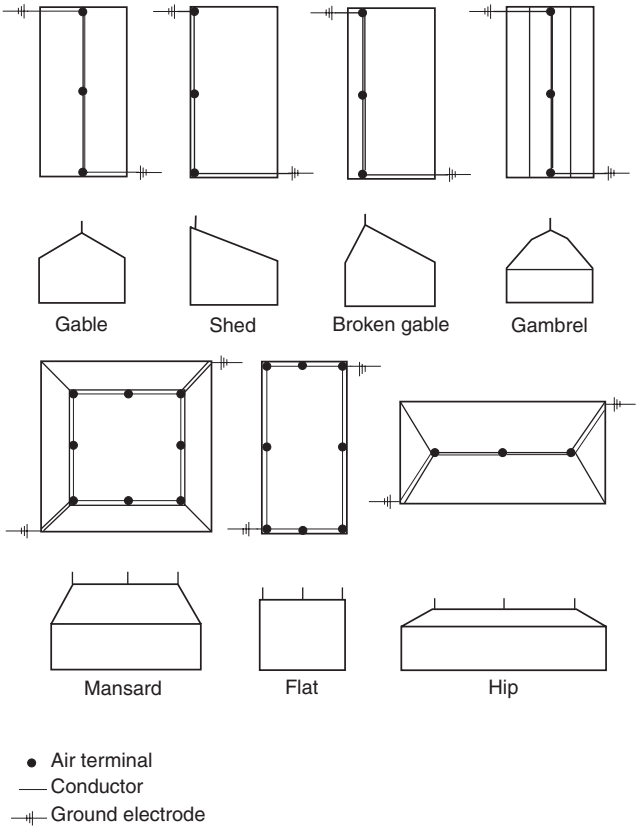


**FIGURE 4.7.1.4 Protection Measures for Various Roof Types. (Drawings are top and end views of each roof type.)**

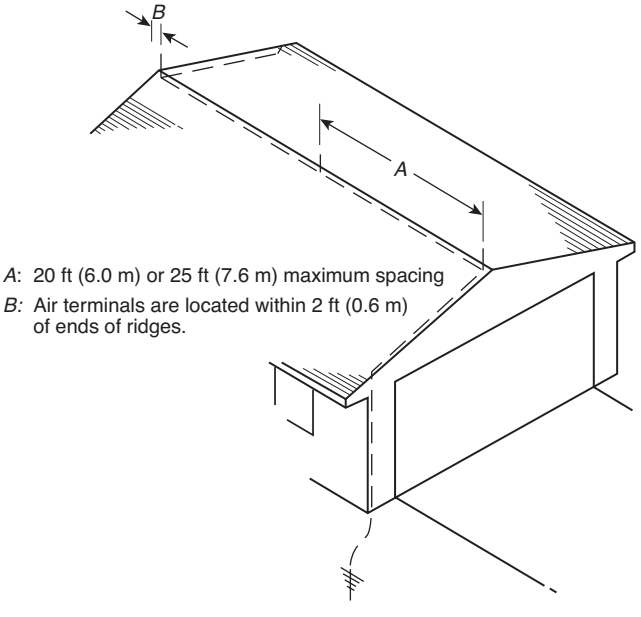


**FIGURE 4.7.2.1 Air Terminals on a Pitched Roof.**

Copyright 2014 National Fire Protection Association (NFPA). Licensed, by agreement, for individual use and download on October 4, 2014 to LEADER and READER for designated user PATTARAPORN SRITRAKOOL. No other reproduction or transmission in any form permitted without written permission of NFPA. For inquires or to report unauthorized use, contact licensing@nfpa.org.



**4.7.2.2** Strike termination devices shall be placed on ridges of pitched roofs and around the perimeter of flat or gently sloping roofs at intervals not exceeding 20 ft (6 m).

**4.7.2.3** Strike termination devices 2 ft (0.6 m) or more above the object or area to be protected shall be permitted to be placed at intervals not exceeding 25 ft (7.6 m).

**4.7.3 Pitched Roof Areas.**

**4.7.3.1** Strike termination devices shall not be required around the perimeters of pitched roofs with eave heights less than or equal to 50 ft (15 m) above grade.

**4.7.3.2** For pitched roofs with a span of 100 ft (30 m) or less and eave heights greater than or equal to 50 ft (15 m) but less than 150 ft (46 m) above grade, it shall be permitted to omit strike termination devices at the eaves if the slope of that roof is equal to or steeper than the tangent of the arc at the eave elevation of a rolling sphere having a 150 ft (46 m) radius. *(See Figure 4.7.3.2.)*

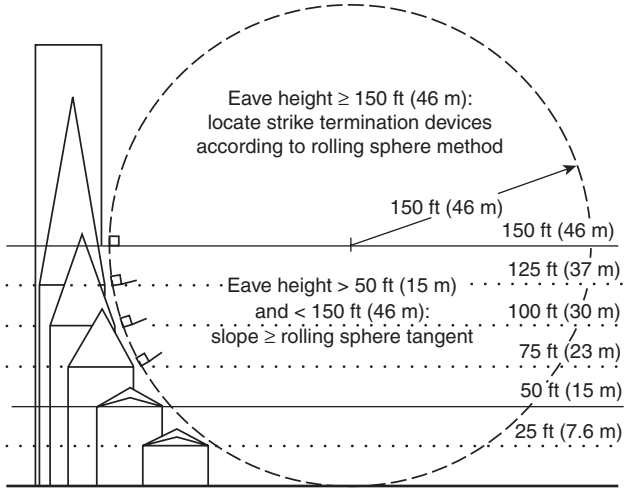


**FIGURE 4.7.3.2 Illustration of Tangent of Rolling Sphere Method.**

**4.7.3.2.1** Except for the gutter, any portion of the building that extends beyond that tangent shall be protected.

**4.7.3.2.2** Eaves over 150 ft (46 m) above grade shall be protected in accordance with 4.7.2.

**4.7.3.2.3*** The tangent of the rolling sphere arc shall be considered as a vertical line over 150 ft (46 m) above grade, except as permitted by 4.8.2.4.

**4.7.3.3** Pitched roofs not meeting the criteria of 4.7.3.1 and 4.7.3.2 shall be treated in the same manner as flat or gently sloping roofs.

**4.7.4 Roofs with Intermediate Ridges.** Strike termination devices shall be located along the outermost ridges of buildings that have a series of intermediate ridges at the same intervals as required by 4.7.2.

**4.7.4.1** Strike termination devices shall be located on the intermediate ridges in accordance with the requirements for the spacing of strike termination devices on flat or gently sloping roofs.

**4.7.4.2** If any intermediate ridge is higher than the outermost ridges, it shall be treated as a main ridge and protected according to 4.7.2.

**4.7.5 Flat or Gently Sloping Roof Area.** Flat or gently sloping roofs that exceed 50 ft (15 m) in width or length shall have additional strike termination devices located at intervals not to exceed 50 ft (15 m) on the flat or gently sloping areas, as shown in Figure 4.7.5(a) and Figure 4.7.5(b); such area shall be permitted to be protected using taller strike termination devices that create zones of protection using the rolling sphere method so the sphere does not contact the flat or gently sloping roof area.

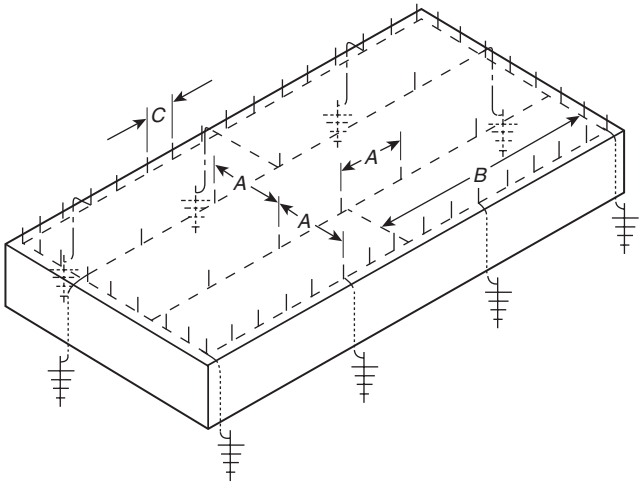


*A:* 50 ft (15 m) maximum spacing between air terminals
*B:* 150 ft (46 m) maximum length of cross-run conductor permitted without a connection from the cross-run conductor to the main perimeter or down conductor
*C:* 20 ft (6 m) or 25 ft (7.6 m) maximum spacings between air terminals along edge

**FIGURE 4.7.5(a) Air Terminals on a Flat Roof.**

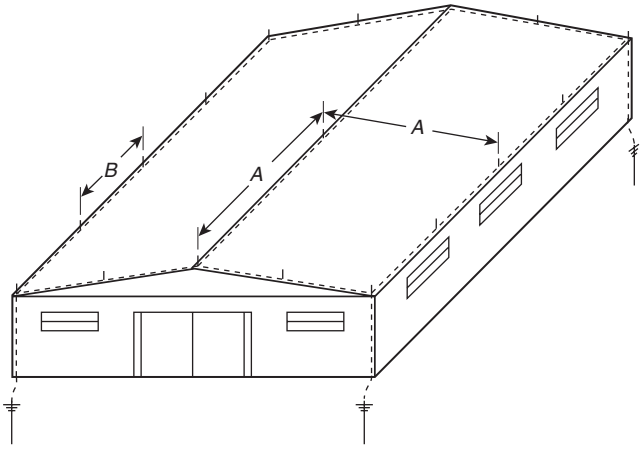


*A:* 50 ft (15 m) maximum spacing
*B:* 20 ft (6 m) or 25 ft (7.6 m) maximum spacing

**FIGURE 4.7.5(b) Air Terminals on a Gently Sloping Roof.**

Copyright 2014 National Fire Protection Association (NFPA). Licensed, by agreement, for individual use and download on October 4, 2014 to LEADER and READER for designated user PATTARAPORN SRITRAKOOL. No other reproduction or transmission in any form permitted without written permission of NFPA. For inquires or to report unauthorized use, contact licensing@nfpa.org.



**4.7.6 Flat or Gently Sloping Roofs with Irregular Perimeters.** Structures that have exterior wall designs that result in irregular roof perimeters shall be treated on an individual basis.

**4.7.6.1** The imaginary roof edge formed by the outermost projections shall be used to locate the strike termination devices in accordance with 4.7.2.

**4.7.6.2** In all cases, strike termination devices shall be located in accordance with Section 4.7, as shown in Figure 4.7.6.2.

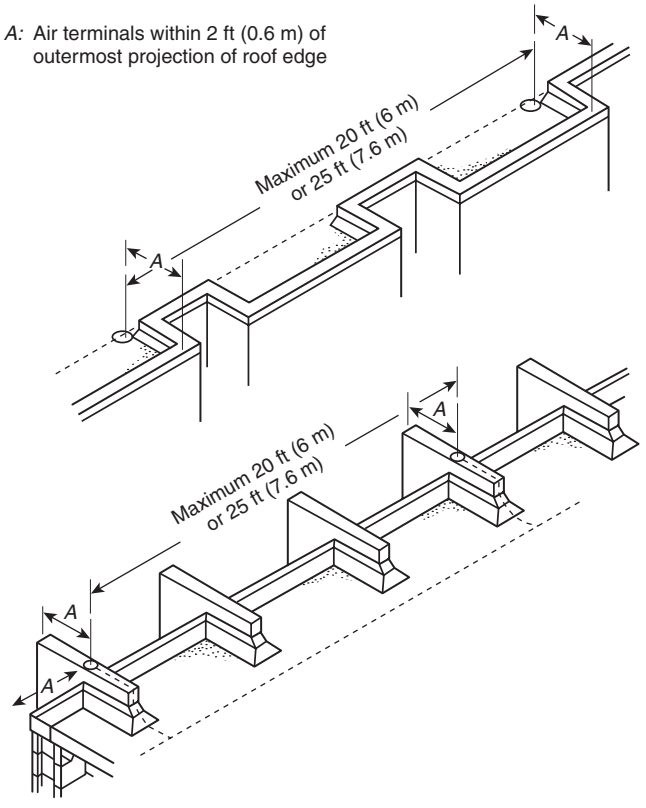


**FIGURE 4.7.6.2 Flat or Gently Sloping Roof with an Irregular Perimeter.**

**4.7.7* Dormers.**

**4.7.7.1** Dormers as high as or higher than the main roof ridge shall be protected with strike termination devices, conductors, and grounds.

**4.7.7.2** Dormers and projections below the main ridge shall require protection only on those areas extending outside a zone of protection.

**4.7.8 Strike Termination Devices Installed on Vertical Roof Members.** Strike termination devices installed on vertical roof members shall be permitted to use a single main-size cable to connect to a main roof conductor.

**4.7.8.1** The main roof conductor shall be run adjacent to the vertical roof members so that the single cable from the strike termination device is as short as possible and in no case longer than 16 ft (4.9 m).

**4.7.8.2** The connection of the single cable to the down conductor shall be made with a tee splice or other fitting listed for the purpose, as shown in Figure 4.7.8.2.

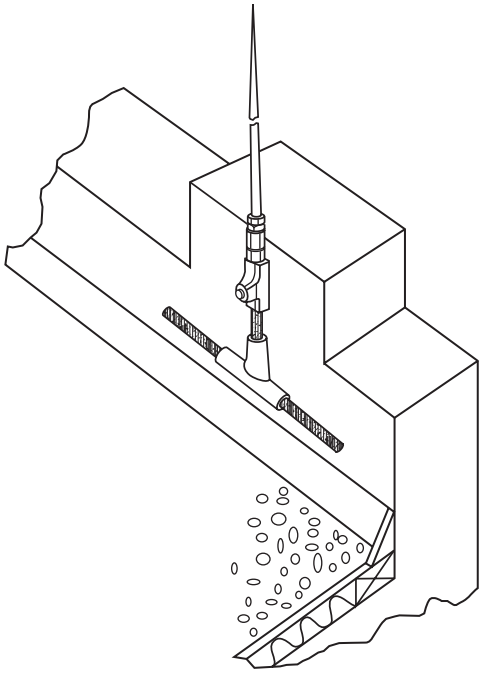

Note: Air terminal tip configurations can be sharp or blunt.

**FIGURE 4.7.8.2 Strike Termination Devices Installed on Vertical Roof Members.**

**4.7.9 Open Areas in Flat Roofs.** The perimeter of open areas, such as light or mechanical wells, shall be protected if the open area perimeter exceeds 300 ft (92 m), provided both rectangular dimensions exceed 50 ft (15 m).

**4.7.10 Domed or Rounded Roofs.** Strike termination devices shall be located so that no portion of the structure is located outside a zone of protection, as set forth in Section 4.8.

**4.7.11* Chimneys, Vents, and Other Objects on Roofs Not in a Zone of Protection.** Strike termination devices shall be required on all objects not located within a zone of protection, including metal objects having a metal thickness of less than 3/16 in. (4.8 mm) except as permitted in 4.7.11.1 through 4.7.11.4.

**4.7.11.1** Metal objects with a metal thickness of 3/16 in. (4.8 mm) or more and not located in a zone of protection shall require connection to the lightning protection system using a main-size lightning conductor and a main-size connector in accordance with the following:

(1) It has a surface contact area of not less than 3 in.$^2$ (1940 mm$^2$) or a minimum of 1½ in. (38 mm) of contact along the axis of a round surface.
(2) Two or more paths to ground are provided, located as is required for strike termination devices.

Copyright 2014 National Fire Protection Association (NFPA). Licensed, by agreement, for individual use and download on October 4, 2014 to LEADER and READER for designated user PATTARAPORN SRITRAKOOL. No other reproduction or transmission in any form permitted without written permission of NFPA. For inquires or to report unauthorized use, contact licensing@nfpa.org.



**4.7.11.2*** Required strike termination devices shall be installed on objects, as shown in Figure 4.7.11.2, so that the distance from a strike termination device to an outside corner or the distance perpendicular to an outside edge is not greater than 2 ft (0.6 m).

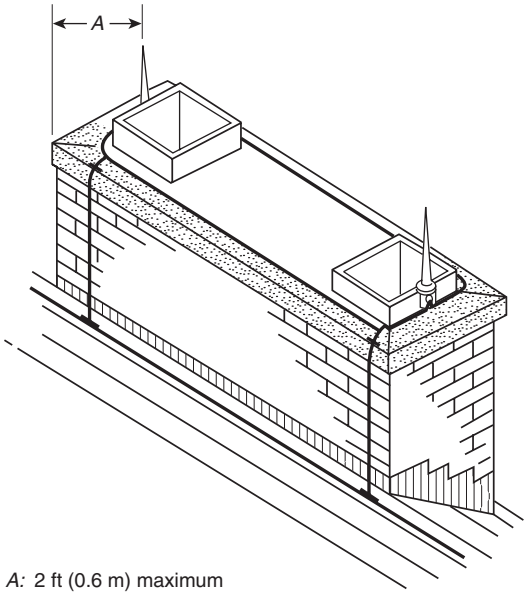


*A:* 2 ft (0.6 m) maximum
Note: Air terminal tip configurations can be sharp or blunt.

**FIGURE 4.7.11.2 Air Terminals on a Chimney.**

**4.7.11.3** Where only one strike termination device is required on an object, at least one main-size conductor shall connect the strike termination device to a main conductor at the location where the object meets the roof surface and provides two or more paths to ground from that location in accordance with Section 4.9 and 4.9.2.

**4.7.11.4** Objects on roofs that are less than 10 in. (254 mm) above the surface of the roof shall not require strike termination devices unless they are located within 3 ft (0.9 m) of the ridge or roof edge.

**4.7.12 Metal Roof Top Units.** Strike termination devices shall be required in accordance with 4.7.12.1 through 4.7.12.3.2 on all roof top mechanical units with continuous metal housings less than 3⁄16 in. (4.8 mm) thick, such as air-conditioning/heating units, metal air intake/exhaust housings, and cooling towers, that are not located in a zone of protection.

**4.7.12.1** Air terminals shall be installed in accordance with 4.7.2 through 4.7.5.

**4.7.12.2** The air terminals shall be mounted on bases having a minimum contact area of 3 in.$^2$ (1940 mm$^2$), each secured to bare metal of the housing or mounted by drilling and tapping to the unit's frame in accordance with 4.19.3.2 and 4.19.3.3.

**4.7.12.3** At least two main-size conductors shall be installed to connect the unit to the lightning protection system.

**4.7.12.3.1** The connection shall be made to bare metal at the base or lower edges of the unit using main-size lightning conductors and bonding devices that have a surface contact area of not less than 3 in.$^2$ (1940 mm$^2$) and shall provide two or more paths to ground, as is required for strike termination devices.

**4.7.12.3.2** The two main bonding plates shall be located as far apart as practicable at the base or lower edges of the unit's electrically continuous metal housing and connected to the lightning protection system.

**4.7.13* Movable or Rotating Objects on Roofs.** Movable or rotating metal objects on roofs shall be protected in accordance with 4.7.13.1 or 4.7.13.2.

**4.7.13.1** Where practicable, movable or rotating objects on roofs shall be placed in a zone of protection such as by the use of properly supported long air terminals or lightning masts.

**4.7.13.2** Movable or rotating metal objects outside a zone of protection shall be connected as follows:

(1) The fixed portion of movable or rotating metal objects on roofs shall be connected to the lightning protection system in accordance with 4.7.11.1.
(2) A bonding jumper connecting the metal movable or rotating portion to the fixed portion shall be permitted.

**4.8 Zones of Protection.** The geometry of the structure shall determine the zone of protection.

**4.8.1** One or more of the following methods shall be used to determine the overall zone of protection:

(1) Air terminal placements, as described in Section 4.7
(2) The angle method, as described in 4.8.2
(3) The rolling sphere method, as described in 4.8.3

**4.8.2 Multiple-Level Roofs.**

**4.8.2.1** For structures with multiple-level roofs no more than 50 ft (15 m) in height, the zone of protection shall include areas as identified in 4.8.2.3 and 4.8.2.4.

**4.8.2.2** The zone of protection shall be permitted to be delineated as a cone, with the apex located at the highest point of the strike termination device and its surface formed by a 45-degree or 63-degree angle from the vertical, based on the height of the strike termination device above the ground as defined in 4.8.2.3 and 4.8.2.4.

**4.8.2.3** Structures that do not exceed 25 ft (7.6 m) above earth shall be considered to protect lower portions of a structure located within a one-to-two zone of protection as shown in Figure 4.8.2.3(a) and Figure 4.8.2.3(b).

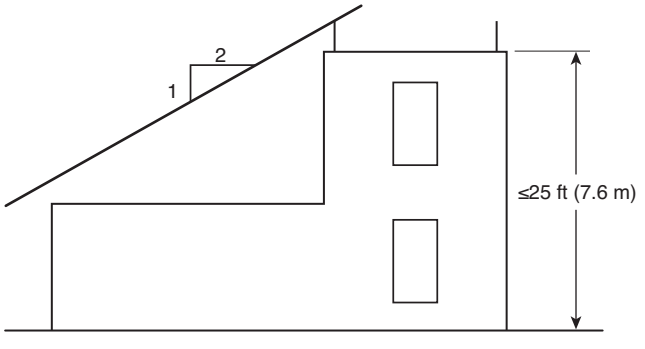


**FIGURE 4.8.2.3(a) Lower Roof Protection for Flat-Roof Buildings 25 ft (7.6 m) or Less in Height.**

Copyright 2014 National Fire Protection Association (NFPA). Licensed, by agreement, for individual use and download on October 4, 2014 to LEADER and READER for designated user PATTARAPORN SRITRAKOOL. No other reproduction or transmission in any form permitted without written permission of NFPA. For inquires or to report unauthorized use, contact licensing@nfpa.org.



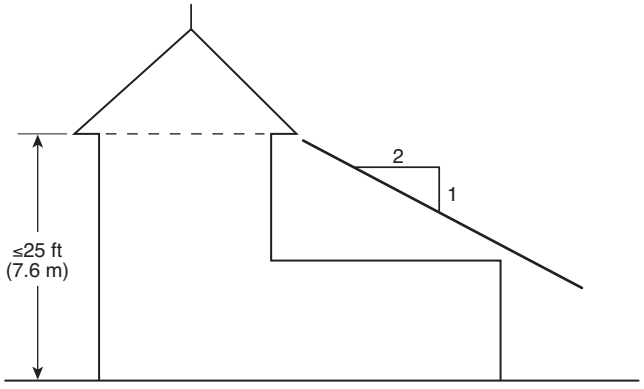


**FIGURE 4.8.2.3(b) Lower Roof Protection Provided by Pitched-Roof Buildings 25 ft (7.6 m) or Less in Height.**

**4.8.2.4** Structures that do not exceed 50 ft (15 m) above earth shall be considered to protect lower portions of a structure located within a one-to-one zone of protection as shown in Figure 4.8.2.4(a) and Figure 4.8.2.4(b).

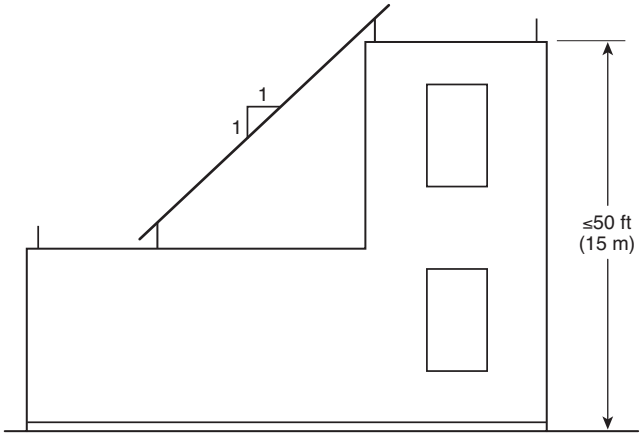


**FIGURE 4.8.2.4(a) Lower Roof Protection for Buildings 50 ft (15 m) or Less in Height.**

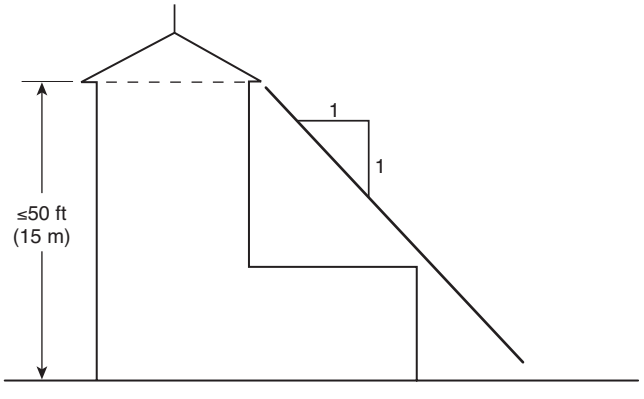


**FIGURE 4.8.2.4(b) Lower Roof Protection Provided by Pitched-Roof Buildings 50 ft (15 m) or Less in Height.**

**4.8.3 Rolling Sphere Method.**

**4.8.3.1*** The zone of protection shall include the space not intruded by a rolling sphere having a radius of the striking distance determined for the type of structure being protected, as shown in Figure 4.8.3.1.

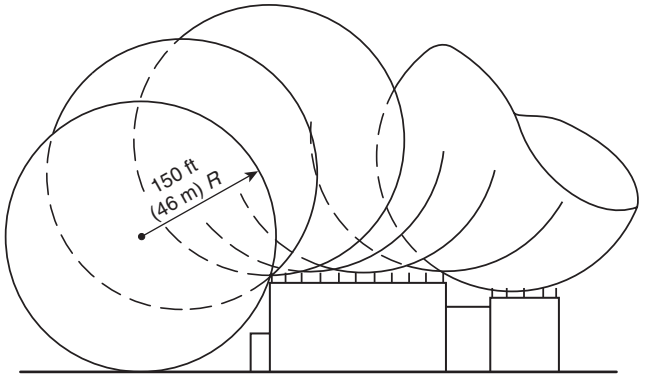


**FIGURE 4.8.3.1 Zone of Protection Depicting Rolling Sphere Method.**

**4.8.3.1.1** Where the sphere is tangent to earth and resting against a strike termination device, all space in the vertical plane between the two points of contact and under the sphere shall be considered to be in the zone of protection.

**4.8.3.1.2** A zone of protection shall also be formed where such a sphere is resting on two or more strike termination devices and shall include the space in the vertical plane under the sphere and between those devices, as shown in Figure 4.8.3.1.

**4.8.3.1.3** All possible placements of the sphere shall be considered when determining the overall zone of protection using the rolling sphere method.

**4.8.3.1.4** The striking distance shall not exceed 150 ft (46 m).

**4.8.3.2*** For structure heights exceeding the striking distance above earth or above a lower strike termination device, the zone of protection shall be the space in the vertical plane between the points of contact and also under the sphere where the sphere is resting against a vertical surface of the structure and the lower strike termination device(s) or earth.

**4.8.3.3** Under the rolling sphere method, the horizontal protected distance found geometrically by Figure A.4.8.3.1 also shall be permitted to be calculated using the following formula (units shall be consistent, ft or m):

$$d = \sqrt{h_1(2R - h_1)} - \sqrt{h_2(2R - h_2)}$$

where:

$d$ = horizontal protected distance (ft or m)
$h_1$ = height of the higher roof (ft or m)
$R$ = rolling sphere striking distance radius (ft or m)
$h_2$ = height of the lower roof (top of the object) (ft or m)

**4.8.3.3.1** For the formula to be valid, the sphere shall be either tangent to the lower roof or in contact with the earth and in contact with the vertical side of the higher portion of the structure.

Copyright 2014 National Fire Protection Association (NFPA). Licensed, by agreement, for individual use and download on October 4, 2014 to LEADER and READER for designated user PATTARAPORN SRITRAKOOL. No other reproduction or transmission in any form permitted without written permission of NFPA. For inquires or to report unauthorized use, contact licensing@nfpa.org.



**4.8.3.3.2** In addition, the difference in heights between the upper and lower roofs or earth shall be the striking distance or less.

**4.9 Conductors.** Main conductors shall interconnect all strike termination devices and shall form two or more paths from each strike termination device downward, horizontally, or rising at no more than ¼ slope to connections with grounding electrodes, except as permitted by 4.9.1 and 4.9.2.

**4.9.1 One-Way Path.** Strike termination devices on a lower roof level that are interconnected by a conductor run from a higher roof level shall require only one horizontal or downward path to ground, provided the lower level roof conductor run does not exceed 40 ft (12 m).

**4.9.2 Dead Ends.** A "dead ended" main conductor shall be permitted between a single strike termination device or connector fitting and a main conductor run under the following conditions:

(1) Where the main-size conductor run to which the dead end is connected has a two-way path to ground
(2) At a main protected roof level, where the horizontal portion of the dead-end conductor is not more than 8 ft (2.4 m) in total length
(3) On a roof below the main protected roof level, where the dead-end conductor is not more than 16 ft (4.9 m) in total length, as shown in Figure 4.9.2
(4) Where all dead-end conductor runs maintain a horizontal or downward course from the strike termination device to the connection point with the main conductor run

**4.9.3 Substitution of Main Conductor.**

**4.9.3.1** Ancillary metal parts of a structure, such as eave troughs, downspouts, ladders, chutes, or other metal parts except as permitted in 4.19.1, shall not be substituted for the main conductor.

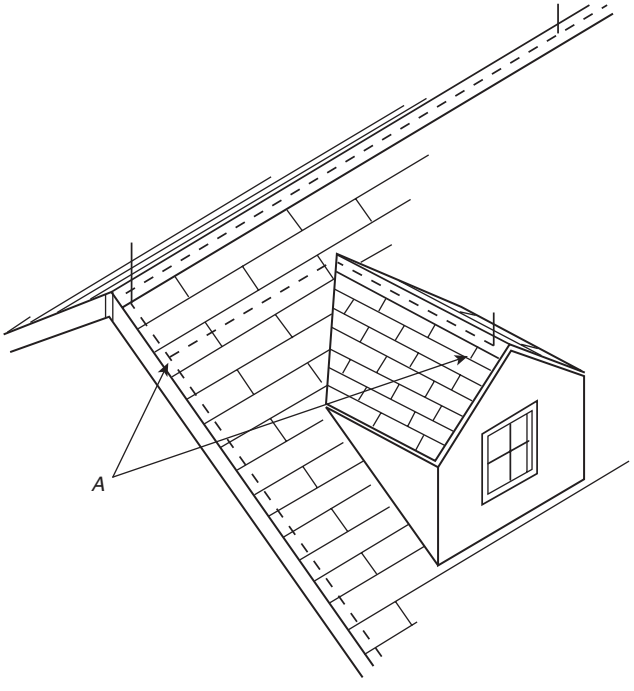


*A:* Permissible dead-end total conductor length not over 16 ft (4.9 m)

**FIGURE 4.9.2 Dead End.**

**4.9.3.2** Permanent exterior metal handrails and ladders that are subject to direct lightning strikes (e.g., on roofs or between roofs) and are electrically continuous shall be permitted to be used as main conductors where the minimum thickness is 0.064 in. (1.63 mm).

**4.9.3.3** Metal roofing or siding having a thickness of less than 3⁄16 in. (4.8 mm) shall not be substituted for main conductors.

**4.9.4 "U" or "V" Pockets.**

**4.9.4.1** Conductors shall maintain a horizontal or downward coursing free from "U" or "V" (down and up) pockets.

**4.9.4.2** Such pockets, often formed at low-positioned chimneys, dormers, or other projections on sloped roofs or at parapet walls, shall be provided with a down conductor from the base of the pocket to ground or to an adjacent downlead conductor, as shown in Figure 4.9.4.2.

**4.9.5 Conductor Bends.** No bend of a conductor shall form an included angle of less than 90 degrees, nor shall it have a radius of bend less than 8 in. (203 mm), as shown in Figure 4.9.5.

**4.9.6 Conductor Supports.**

**4.9.6.1** Conductors shall be permitted to be coursed through air without support for a distance of 3 ft (0.9 m) or less.

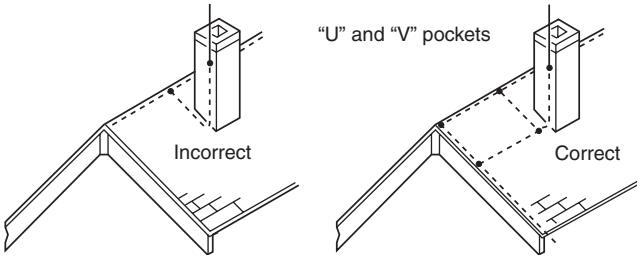


**FIGURE 4.9.4.2 Pockets.**

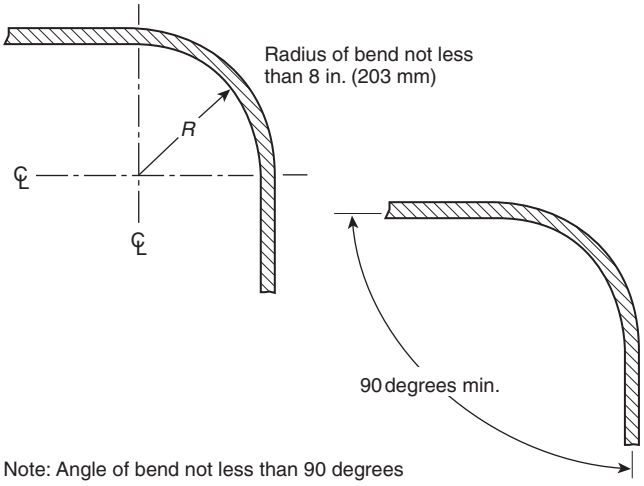


Note: Angle of bend not less than 90 degrees

**FIGURE 4.9.5 Conductor Bends.**

Copyright 2014 National Fire Protection Association (NFPA). Licensed, by agreement, for individual use and download on October 4, 2014 to LEADER and READER for designated user PATTARAPORN SRITRAKOOL. No other reproduction or transmission in any form permitted without written permission of NFPA. For inquires or to report unauthorized use, contact licensing@nfpa.org.



**4.9.6.2** Conductors that must be coursed through air for distances longer than that permitted in 4.9.6.1 shall be provided with a positive means of support that will prevent damage or displacement of the conductor.

**4.9.7 Roof Conductors.**

**4.9.7.1** Roof conductors shall be coursed along ridges of gable, gambrel, and hip roofs; around the perimeter of flat roofs; behind or on top of parapets; and across flat or gently sloping roof areas as required to interconnect all strike termination devices.

**4.9.7.2** Conductors shall be coursed through or around obstructions (e.g., cupolas and ventilators) in a horizontal plane with the main conductor.

**4.9.8 Cross-Run Conductors.** Cross-run conductors (main conductors) shall be required to interconnect the strike termination devices on flat or gently sloping roofs that exceed 50 ft (15 m) in width.

**4.9.8.1** For example, roofs from 50 ft to 100 ft (15 m to 30 m) in width shall require one cross-run conductor, roofs 100 ft to 150 ft (30 m to 46 m) in width shall require two cross-run conductors, and so on.

**4.9.8.2** Cross-run conductors shall be connected to the main perimeter cable at intervals not exceeding 150 ft (46 m), as shown in Figure 4.7.5(a).

**4.9.9 Down Conductors.**

**4.9.9.1** Down conductors shall be as widely separated as practicable.

**4.9.9.2** The location of down conductors shall depend on considerations such as the following:

(1) Placement of strike termination devices
(2) Most direct coursing of conductors
(3) Earth conditions
(4) Security against displacement
(5) Location of large metallic bodies
(6) Location of underground metallic piping systems

**4.9.10 Number of Down Conductors.** At least two down conductors shall be provided on any kind of structure, including steeples.

**4.9.10.1** Structures exceeding 250 ft (76 m) in perimeter shall have a down conductor for every 100 ft (30 m) of perimeter or fraction thereof.

**4.9.10.2** The total number of down conductors on structures having flat or gently sloping roofs shall be such that the average distance between all down conductors does not exceed 100 ft (30 m).

**4.9.10.3** Irregularly shaped structures shall have additional down conductors as necessary to provide a two-way path from each strike termination device.

**4.9.10.4** For a flat or gently sloping roof structure, only the perimeter of the roof areas requiring protection shall be measured.

**4.9.10.5** When determining the perimeter of a pitched roof structure, the horizontal projection (footprint) of the protected roof shall be measured as shown in Figure 4.9.10.5.

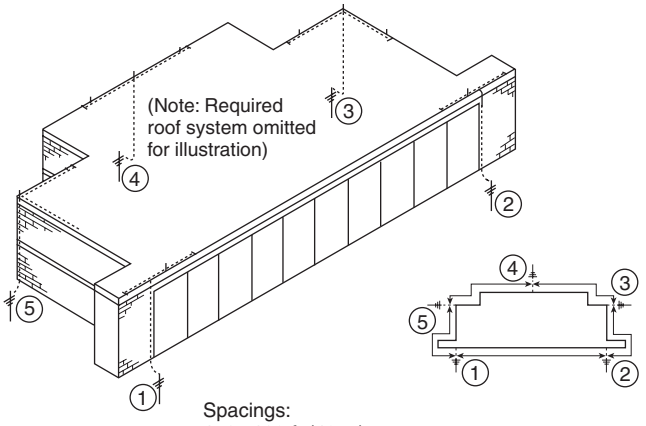


**FIGURE 4.9.10.5 Quantity of Down Conductors.**

**4.9.10.6** Lower roofs or projections that are located within a zone of protection shall not be required to be included in the perimeter measurement.

**4.9.11 Protecting Down Conductors.** Down conductors located in runways, driveways, school playgrounds, cattle yards, public walks, or other locations subject to physical damage or displacement shall be guarded.

**4.9.11.1** Metallic guards shall be bonded at each end.

**4.9.11.2** The down conductor shall be protected for a minimum distance of 6 ft (1.8 m) above grade level.

**4.9.12 Down Conductors Entering Corrosive Soil.** Down conductors entering corrosive soil shall be protected against corrosion by a protective covering beginning at a point 3 ft (0.9 m) above grade level and extending for their entire length below grade.

**4.9.13 Down Conductors and Structural Columns.** Down conductors coursed on or in reinforced concrete columns or on structural steel columns shall be connected to the reinforcing steel or the structural steel member at their upper and lower extremities.

**4.9.13.1** In the case of long vertical members, an additional connection shall be made at intervals not exceeding 200 ft (60 m).

**4.9.13.2** The connections for 4.9.13.1 shall be made using listed clamps or listed bonding plates or by welding or brazing.

**4.9.13.3** Where the bonding requirements of 4.9.13.1 and 4.9.13.2 are not satisfied, provisions shall be made to ensure the required interconnection of these parallel vertical paths.

**4.9.14 Down Conductors in Nonmetallic Enclosures.** The use of PVC conduit or other nonmetallic chase shall not eliminate the need to satisfy the bonding requirements of Sections 4.15 and 4.16.

Copyright 2014 National Fire Protection Association (NFPA). Licensed, by agreement, for individual use and download on October 4, 2014 to LEADER and READER for designated user PATTARAPORN SRITRAKOOL. No other reproduction or transmission in any form permitted without written permission of NFPA. For inquires or to report unauthorized use, contact licensing@nfpa.org.



**4.10 Conductor Fasteners.** Conductors shall be fastened to the structure upon which they are placed at intervals not exceeding 3 ft (0.9 m).

**4.10.1** Attached by nails, screws, bolts, or adhesive as necessary, the fasteners shall not be subject to breakage.

**4.10.2** Fasteners shall be of the same materials as the conductor or of a material equally resistant to corrosion as that of the conductor.

**4.10.3** No combination of materials shall be used that will form an electrolytic couple of such a nature that, in the presence of moisture, corrosion will be accelerated.

**4.11 Masonry Anchors.** Masonry anchors used to attach lightning protection materials shall have a minimum outside diameter of ¼ in. (6.4 mm).

**4.11.1** Holes made to receive the body of the anchor shall be of the correct size and made in the brick, stone, or other masonry unit rather than in mortar joints.

**4.11.2** Where the anchors are installed, the fit shall be tight against moisture, thus reducing the possibility of damage due to freezing.

**4.12 Connector Fittings.** Connector fittings shall be used at all "end-to-end", "tee", or "Y" splices of lightning conductors.

**4.12.1** Fittings shall be attached so as to withstand a pull test of 200 lb (890 N).

**4.12.2** Fittings used for required connections to metal bodies in or on a structure shall be secured to the metal body by bolting, brazing, welding, screwing, or high-compression connectors listed for the purpose.

**4.12.3** Conductor connections shall be of the bolted, welded, high compression, or crimp type.

**4.12.4** Crimp-type connections shall not be used with Class II conductors.

**4.13 Grounding Electrodes.**

**4.13.1 General.**

**4.13.1.1** Each down conductor shall terminate at a grounding electrode dedicated to the lightning protection system or to a grounding electrode system in the case of a building, structure, or facility that has multiple grounding electrodes that are bonded together with a ground ring electrode sized in accordance with 4.13.4.2 to form the grounding electrode system.

**4.13.1.2** The design, size, and depth of grounding electrodes shall comply with 4.13.2 through 4.13.8.

**4.13.1.3** Underground metallic piping or ground rod–type electrodes for electrical, communications, or other systems shall not be used in lieu of lightning grounding electrodes.

**4.13.1.4** The down conductor(s) shall be attached permanently to the grounding electrode system by bolting, brazing, welding, or high-compression connectors listed for the purpose.

**4.13.1.5** Grounding electrodes shall be installed below the frost line where possible (excluding shallow topsoil conditions).

**4.13.1.6*** In corrosive environments, the use of stainless steel alloy grounding electrodes shall be permitted.

**4.13.2* Ground Rods.**

**4.13.2.1** Ground rods shall be not less than ½ in. (12.7 mm) in diameter and 8 ft (2.4 m) long.

**4.13.2.2** Rods shall be free of paint or other nonconductive coatings.

**4.13.2.3 Ground Rod Depth.**

**4.13.2.3.1** The ground rods shall extend vertically not less than 10 ft (3 m) into the earth.

**4.13.2.3.2** The earth shall be compacted and made tight against the length of the conductor and ground rod, as illustrated in Figure 4.13.2.3.2.

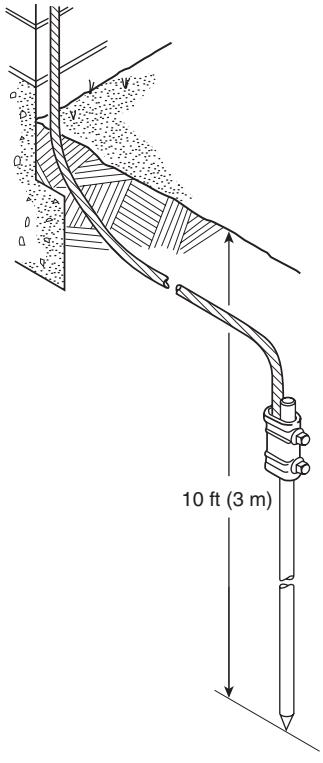


**FIGURE 4.13.2.3.2 Typical Single Ground Rod Installation.**

**4.13.2.4* Multiple Ground Rods.** Where multiple connected ground rods are used, the separation between any two ground rods shall be at least the sum of their driven depths, where practicable.

**4.13.2.5** Ground rods shall be copper-clad steel, solid copper, or stainless steel.

**4.13.3 Concrete-Encased Electrodes.** Concrete-encased electrodes shall be used only in new construction.

**4.13.3.1** The electrode shall be located near the bottom of a concrete foundation or footing that is in direct contact with the earth and shall be encased by not less than 2 in. (50 mm) of concrete.

**4.13.3.2** The encased electrode shall consist of one of the following:

(1) Not less than 20 ft (6 m) of bare copper main-size conductor
(2) At least 20 ft (6 m) of one or more steel reinforcing bars or rods not less than ½ in. (12.7 mm) in diameter that have been effectively bonded together by either welding or overlapping 20 diameters and wire tying

Copyright 2014 National Fire Protection Association (NFPA). Licensed, by agreement, for individual use and download on October 4, 2014 to LEADER and READER for designated user PATTARAPORN SRITRAKOOL. No other reproduction or transmission in any form permitted without written permission of NFPA. For inquires or to report unauthorized use, contact licensing@nfpa.org.



**4.13.4 Ground Ring Electrode.** A ground ring electrode encircling a structure shall be as shown in Figure 4.13.4.

**4.13.4.1** The ground ring electrode shall be in direct contact with earth at a depth of not less than 18 in. (460 mm) or encased in a concrete footing in accordance with 4.13.3.

**4.13.4.2** The ground ring electrode shall be a main-size (lightning) conductor or a grounding conductor of equivalent or greater cross-sectional area.

**4.13.5* Radials.**

**4.13.5.1** A radial electrode system shall consist of one or more main-size conductors, each in a separate trench extending outward from the location of each down conductor.

**4.13.5.2** Each radial electrode shall be not less than 12 ft (3.6 m) in length.

**4.13.5.3** The radial electrode shall be buried not less than 18 in. (460 mm) below grade.

**4.13.6* Plate Electrode or Ground Plate Electrode.**

**4.13.6.1** A ground plate or plate electrode shall have a minimum thickness of 0.032 in. (0.8 mm) and a minimum surface area of 2 $ft^2$ (0.18 $m^2$).

**4.13.6.2** The ground plate electrode shall be buried not less than 18 in. (460 mm) below grade.

**4.13.7 Combinations.** Combinations of the grounding electrodes in Section 4.13 shall be permitted.

**4.13.8 Grounding Electrode Selection Criteria.** The site limitations and soil conditions shall determine the selection of the type or combinations of types of grounding electrodes used.

**4.13.8.1* Shallow Topsoil.** The methods in 4.13.3 through 4.13.7 shall be used in shallow topsoil conditions where practicable.

**4.13.8.1.1** Where the methods described in 4.13.3 through 4.13.6 are found to be impractical due to topsoil depth less than 18 in. (460 mm), it shall be permitted to provide a ground terminal buried at the maximum depth of topsoil available.

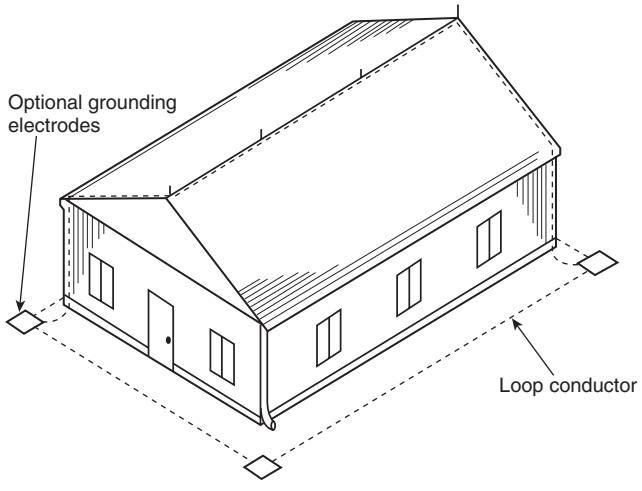


**FIGURE 4.13.4 Typical Ground Ring Electrode Installation.**

**4.13.8.1.2*** The ground terminal for shallow topsoil shall be either a ground ring electrode, in accordance with 4.13.4, a minimum distance of 2 ft (0.6 m) from the foundation or exterior footing; radial(s) in accordance with 4.13.5; or a plate electrode, in accordance with 4.13.6, a minimum distance of 2 ft (0.6 m) from the foundation or exterior footing. The ground ring electrode, radial(s), or plate electrode shall be buried at the maximum depth of topsoil available.

**4.13.8.1.3** Where a method of 4.13.8.1.2 is impossible, radial(s) shall be permitted to be laid directly on bedrock a minimum distance of 12 ft (3.6 m) from the foundation or exterior footing. A ground ring electrode encircling the structure shall be permitted to be laid directly on bedrock a minimum distance of 2 ft (0.6 m) from the foundation or exterior footing.

**4.13.8.1.4** In those cases where the grounding conductor is laid directly on bedrock, the conductor shall be secured to the bedrock every 3 ft (0.9 m) by nailing, conductive cement, or a conductive adhesive to ensure electrical contact and protect against movement.

**4.13.8.2 Sandy Soil Conditions.** Because sandy or gravelly soil conditions are characterized by high soil resistivity, multiple grounding electrodes shall be used to augment the lightning grounding electrode system.

**4.14 Common Bonding of Grounded Systems.**

**4.14.1 General.** All grounded media and buried metallic conductors that can assist in providing a path for lightning currents in or on a structure shall be interconnected to the lightning protection system within 12 ft vertically (3.6 m vertically) of the base of the structure to provide a common ground potential.

**4.14.2*** For structures exceeding 60 ft (18 m) in height, the interconnection of the lightning protection system grounding electrodes and other grounded media shall be in the form of a ground loop conductor.

**4.14.3*** This interconnection shall include all building grounding electrode systems, including lightning protection, electric service, communication, and antenna system grounding electrodes.

**4.14.4** Interconnection of underground metallic piping systems shall include water service, well casings located within 25 ft (7.6 m) of the structure, gas piping, underground conduits, underground liquefied petroleum gas piping systems, and so on. If the water pipe is not electrically continuous due to the use of plastic pipe sections or other reasons, the nonconductive sections shall be bridged with main-size conductors, or the connection shall be made at a point where electrical continuity is ensured.

**4.14.5*** Where the building grounded systems noted in 4.14.1 are interconnected at a common accessible point in or on the structure, the lightning protection system shall have only one main-size conductor connected to the common bonding point. This common bonding point shall be permitted to include a ground bar, a section of water pipe, or the metallic structural frame in accordance with *NFPA 70, National Electrical Code*.

**4.14.6** Where bonding of the lightning protection grounding system, grounded media, and buried metallic conductors has not been accomplished at a common point, interconnection shall be provided according to the following:

(1) Grounded media and buried metallic conductors shall be bonded to the lightning protection grounding system below a height 12 ft (3.6 m) vertically above the base of the structure.

Copyright 2014 National Fire Protection Association (NFPA). Licensed, by agreement, for individual use and download on October 4, 2014 to LEADER and READER for designated user PATTARAPORN SRITRAKOOL. No other reproduction or transmission in any form permitted without written permission of NFPA. For inquires or to report unauthorized use, contact licensing@nfpa.org.



(2) Grounded media and buried metallic conductors inherently bonded through construction to the lightning protection grounding system shall not require further bonding.
(3) The continuous metal framework of a structure shall be connected to the lightning protection system *(see 4.9.13 and Section 4.19)*.
(4) Main-size lightning conductors shall be used for direct connection of grounded media and buried metallic conductors to the lightning protection system.
(5) A ground bar designed for interconnection of building grounded systems shall have one connection to the lightning protection system.
(6) A continuous metal water pipe system designed for interconnection of building grounded systems shall be connected to the lightning protection system.
(7)*Interconnection to a gas line shall be made on the customer's side of the meter.
(8)*Where galvanic corrosion is a concern or where a direct bond is prohibited by local code, an isolating spark gap shall be permitted.

**4.15 Potential Equalization.**

**4.15.1 Ground-Level Potential Equalization.** Ground-level potential equalization shall be required in accordance with Section 4.14.

**4.15.2* Roof-Level Potential Equalization.** For structures exceeding 60 ft (18 m) in height, all grounded media in or on the structure shall be interconnected within 12 ft (3.6 m) of the main roof level.

**4.15.3 Intermediate-Level Potential Equalization.** Intermediate-level potential equalization shall be accomplished by the interconnection of the lightning protection system down conductors and other grounded media at the intermediate levels between the roof and the base of a structure in accordance with 4.15.3.1 through 4.15.3.3.

**4.15.3.1 Steel-Framed Structures.** Intermediate-loop conductors shall not be required for steel-framed structures where the framing is electrically continuous.

**4.15.3.2 Reinforced Concrete Structures Where the Reinforcement Is Interconnected and Grounded in Accordance with 4.18.3.** Down conductors and other grounded media shall be interconnected with a loop conductor at intermediate levels not exceeding 200 ft (60 m).

**4.15.3.3 Other Structures.** Down conductors and other grounded media shall be interconnected with a loop conductor at intermediate levels not exceeding 60 ft (18 m).

**4.15.4 Materials.** Horizontal loop conductors used for the interconnection of lightning protection system down conductors, grounding electrodes, or other grounded media shall be sized no smaller than the size required for the main conductor, as listed in Table 4.1.1.1.1 and Table 4.1.1.1.2.

**4.16* Bonding of Metal Bodies.** Metal bodies not covered by other sections of this standard, located outside or inside a structure, that contribute to lightning hazards because they are grounded or assist in providing a path to ground for lightning currents shall be bonded to the lightning protection system in accordance with Section 4.16.

**4.16.1 Long, Vertical Metal Bodies.** Long, vertical metal bodies shall be bonded in accordance with 4.16.1.1 through 4.16.1.3.

**4.16.1.1 Steel-Framed Structures.** Grounded and ungrounded metal bodies exceeding 60 ft (18 m) in vertical length shall be bonded to structural steel members as near as practicable to their extremities unless inherently bonded through construction at those locations.

**4.16.1.2 Reinforced Concrete Structures Where the Reinforcement Is Interconnected and Grounded in Accordance with 4.18.3.** Grounded and ungrounded metal bodies exceeding 60 ft (18 m) in vertical length shall be bonded to the lightning protection system as near as practicable to their extremities unless inherently bonded through construction at those locations.

**4.16.1.3 Other Structures.** Bonding of grounded or ungrounded long, vertical metal bodies shall be determined by 4.16.2 or 4.16.3, respectively.

**4.16.2 Grounded Metal Bodies.** This subsection shall cover the bonding of grounded metal bodies not covered in 4.16.1.

**4.16.2.1** Where grounded metal bodies have been connected to the lightning protection system at only one extremity, the formula shown in 4.16.2.4 or 4.16.2.5 shall be used to determine whether additional bonding is required.

**4.16.2.2** Branches of grounded metal bodies connected to the lightning protection system at their extremities shall require bonding to the lightning protection system in accordance with the formula shown in 4.16.2.4 or 4.16.2.5 if they change vertical direction by more than 12 ft (3.6 m).

**4.16.2.3** Where such bonding has been accomplished either inherently through construction or by physical contact between electrically conductive materials, no additional bonding connection shall be required.

**4.16.2.4 Structures More Than 40 ft (12 m) in Height.**

**4.16.2.4.1** Grounded metal bodies shall be bonded to the lightning protection system where located within a calculated bonding distance, $D$, as determined by the following formula:

$$D = \frac{h}{6n} \times K_m$$

where:
$D$ = calculated bonding distance
$h$ = vertical distance between the bond under consideration and the nearest interconnection to the lightning protection system or ground
$n$ = value related to the number of down conductors that are spaced at least 25 ft (7.6 m) apart, located within a zone of 100 ft (30 m) from the bond in question and where bonding is required within 60 ft (18 m) from the top of any structure
$K_m$ = 1 if the flashover is through air; 0.50 if through dense material such as concrete, brick, wood, and so forth

**4.16.2.4.2** The value $n$ shall be calculated as follows: $n = 1$ where there is only one down conductor in this zone; $n = 1.5$ where there are only two down conductors in this zone; $n = 2.25$ where there are three or more down conductors in this zone.

**4.16.2.4.3** Where bonding is required below a level 60 ft (18 m) from the top of a structure, $n$ shall be the total number of down conductors in the lightning protection system.

Copyright 2014 National Fire Protection Association (NFPA). Licensed, by agreement, for individual use and download on October 4, 2014 to LEADER and READER for designated user PATTARAPORN SRITRAKOOL. No other reproduction or transmission in any form permitted without written permission of NFPA. For inquires or to report unauthorized use, contact licensing@nfpa.org.



**4.16.2.5 Structures 40 ft (12 m) and Less in Height.**

**4.16.2.5.1** Grounded metal bodies shall be bonded to the lightning protection system where located within a calculated bonding distance, *D*, as determined by the following formula:

$$D = \frac{h}{6n} \times K_m$$

where:

$D$ = calculated bonding distance
$h$ = either the height of the building or the vertical distance from the nearest bonding connection from the grounded metal body to the lightning protection system and the point on the down conductor where the bonding connection is being considered
$n$ = value related to the number of down conductors that are spaced at least 25 ft (7.6 m) apart and located within a zone of 100 ft (30 m) from the bond in question
$K_m$ = 1 if the flashover is through air; 0.50 if through dense material such as concrete, brick, wood, and so forth

**4.16.2.5.2** The value $n$ shall be calculated as follows: $n = 1$ where there is only one down conductor in this zone; $n = 1.5$ where there are only two down conductors in this zone; $n = 2.25$ where there are three or more down conductors in this zone.

**4.16.3* Isolated (Ungrounded) Metallic Bodies.**

**4.16.3.1** The effect due to isolated (ungrounded) metallic bodies shall be determined by using Figure 4.16.3.1 according to either 4.16.3.1.1 or 4.16.3.1.2.

**4.16.3.1.1** If $a + b$ is less than the calculated bonding distance, then *A* shall be bonded to *B* directly.

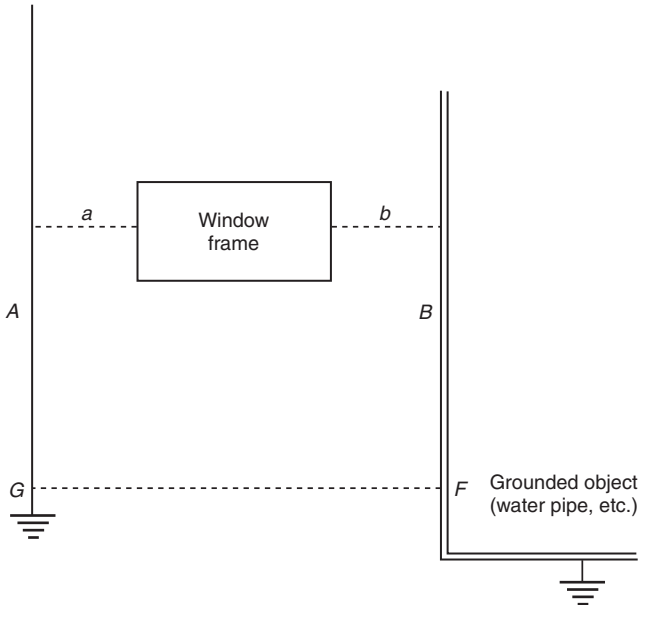


**FIGURE 4.16.3.1 Effect of Isolated (Ungrounded) Metallic Bodies, Such as a Window Frame, in Nonconductive Media.**

**4.16.3.1.2** If $a + b$ is greater than the calculated bonding distance, bonds shall not be required.

**4.16.3.2** A bonding connection shall be required where the total of the shortest distance between the lightning conductor and the isolated metal body and the shortest distance between the isolated metal body and the grounded metal body is equal to or less than the bonding distance as calculated in accordance with 4.16.2.

**4.16.3.3** Bonding connections shall be made between the lightning protection system and the grounded metal body.

**4.16.3.3.1** The bonding connection shall be permitted to be made directly to the grounded metal body.

**4.16.3.3.2** The bonding connection shall be permitted to be made from the lightning protection system to the isolated metal body and from the isolated metal body to the grounded metal body.

**4.16.4 Materials.** Conductors used for the bonding of grounded metal bodies or isolated metal bodies requiring connection to the lightning protection system shall be sized in accordance with bonding conductor requirements in Table 4.1.1.1.1 and Table 4.1.1.1.2.

**4.17 Metal Antenna Masts and Supports.** Metal antenna masts or supports located on a protected structure shall be connected to the lightning protection system using main-size conductors and listed fittings unless they are within a zone of protection.

**4.18 Concealed Systems.**

**4.18.1 General.**

**4.18.1.1** Requirements covering exposed systems also shall apply to concealed systems, except conductors shall be permitted to be coursed under roofing materials, under roof framing, behind exterior wall facing, between wall studding, in conduit chases, or embedded directly in concrete or masonry construction.

**4.18.1.2** Where a conductor is run in metal conduit, it shall be bonded to the conduit at the point where it enters the conduit, at the point where it emerges from the conduit, and at all locations where the conduit is not electrically continuous.

**4.18.2 Masonry Chimneys.** Chimney strike termination devices and conductors shall be permitted to be concealed within masonry chimneys or to be attached to the exterior of masonry chimneys and routed through the structure to concealed main conductors.

**4.18.3 Concealment in Steel-Reinforced Concrete.** Conductors or other components of the lightning protection system concealed in steel-reinforced concrete units shall be connected to the reinforcing steel.

**4.18.3.1** Concealed down conductors shall be connected to the vertical reinforcing steel in accordance with 4.9.13.

**4.18.3.2** Roof conductors or other concealed horizontal conductor runs shall be connected to the reinforcing steel at intervals not exceeding 100 ft (30 m).

**4.18.4 Grounding Electrodes.** Grounding electrodes for concealed systems shall comply with Section 4.13.

Copyright 2014 National Fire Protection Association (NFPA). Licensed, by agreement, for individual use and download on October 4, 2014 to LEADER and READER for designated user PATTARAPORN SRITRAKOOL. No other reproduction or transmission in any form permitted without written permission of NFPA. For inquires or to report unauthorized use, contact licensing@nfpa.org.



**4.18.4.1*** Grounding electrodes located under basement slabs or in crawl spaces shall be installed as near as practicable to the outside perimeter of the structure.

**4.18.4.2** Where rod or cable conductors are used for grounding electrodes, they shall be in contact with the earth for a minimum of 10 ft (3 m).

**4.19 Structural Metallic Systems.**

**4.19.1 General.** The metal framework of a structure shall be permitted to be utilized as the main conductor of a lightning protection system if it is equal to or greater than 3/16 in. (4.8 mm) in thickness and is electrically continuous, or it is made electrically continuous by methods specified in 4.19.3.

**4.19.2 Strike Termination Devices.**

**4.19.2.1** Strike termination devices shall be connected to the structural metal framing by direct connection, by use of individual conductors routed through the roof or parapet walls to the steel framework, or by use of an exterior conductor that interconnects all strike termination devices and that is connected to the metal framework.

**4.19.2.2** Where an exterior conductor is used in lieu of through-roof penetrations for the interconnection of strike termination devices, it shall be connected to the metal framework of the structure as follows:

(1) Conductors along a ridge at intervals not exceeding an average distance of 100 ft (30 m), as widely spaced as practicable and at each end in accordance with Section 4.9
(2) Perimeter roof conductors at intervals not exceeding an average distance of 100 ft (30 m), as widely spaced as practicable and at ends in accordance with Section 4.9
(3) Cross-run conductors at intervals not exceeding a distance of 150 ft (46 m) in lieu of the requirements of 4.9.8

**4.19.3 Connections to Framework.** Conductors shall be connected to areas of the structural metal framework that have been cleaned to base metal, by use of bonding plates having a surface contact area of not less than 8 in.$^2$ (5200 mm$^2$) or by welding or brazing.

**4.19.3.1** Drilling and tapping the metal column to accept a threaded connector also shall be permitted.

**4.19.3.2** The threaded device shall be installed with at least five threads fully engaged and secured with a jam nut or equivalent.

**4.19.3.3** The threaded portion of the connector shall be not less than ½ in. (12.7 mm) in diameter.

**4.19.3.4** Bonding plates shall have bolt-pressure cable connectors and shall be bolted, welded, or brazed to the structural metal framework so as to maintain electrical continuity.

**4.19.3.5*** Where corrosion-protective paint or coatings are removed, the completed electrical connection shall have corrosion protection equivalent to the original coating.

**4.19.4 Grounding Electrodes.**

**4.19.4.1** Grounding electrodes shall be connected to steel columns around the perimeter of the structure at intervals averaging not more than 60 ft (18 m).

**4.19.4.2** Connections shall be made near the base of the column in accordance with the requirements in 4.19.3.

**4.19.5 Bonding Connections.** Where metal bodies located within a steel-framed structure are inherently bonded to the structure through the construction, separate bonding connections shall not be required.

**4.20 Surge Protection.**

**4.20.1* General.** The requirements for surge protection systems installed for the electrical, communications (including, but not limited to, CATV, alarm, and data), or antenna systems or for other electrical system hardware shall apply only to permanently installed surge protection devices (SPDs).

**4.20.2* Surge Protection Requirements.**

**4.20.2.1** SPDs shall be installed at all power service entrances.

**4.20.2.2*** SPDs shall be installed at entrances of conductive communications systems (including, but not limited to, CATV, alarm, and data) and antenna systems.

**4.20.2.3** SPDs shall be installed at all points where an electrical or electronic system conductor leaves a structure to supply another structure if the conductors or cables are run over 100 ft (30 m).

**4.20.2.4*** Surge protection shall be permitted for installation at subpanels or branch panels and at the point of utilization (outlet or signal termination; also termed *supplementary protection*).

**4.20.2.5*** SPDs shall not be required where, under engineering supervision, it is determined that surge threat is negligible or the lines are equivalently protected or where installation compromises safety.

**4.20.3 Surge Protective Device Ratings.**

**4.20.3.1* Electrical Power Circuits.**

**4.20.3.1.1** The SPD shall protect against surges produced by a 1.2/50 µs and 8/20 µs combination waveform generator.

**4.20.3.1.2** SPDs at the service entrance shall have a nominal discharge current ($I_n$) rating of at least 20 kA 8/20 µs per phase.

**4.20.3.2 Signal, Data, and Communication Protection.**

**4.20.3.2.1** SPDs shall be listed for the protection of signal, data, and communications systems.

**4.20.3.2.2** Signal, data, and communications SPDs shall have a maximum discharge current ($I_{max}$) rating of at least 10 kA 8/20 µs when installed at the entrance.

**4.20.4* Measured Limiting Voltage of an SPD.** The published voltage protection rating (VPR) for each mode of protection shall be selected to be no greater than those given in Table 4.20.4 for the different power distribution systems to which they can be connected.

**4.20.5* Facility ac Surge Protection.**

**4.20.5.1** The short-circuit current rating of the SPD shall be coordinated with the available fault current rating of the supply (panel) to which it is connected, in accordance with *NFPA 70, National Electrical Code*.

**4.20.5.2** The maximum continuous operating voltage (MCOV) of the SPD shall be selected to ensure that it is greater than the upper tolerance of the utility power system to which it is connected.

Copyright 2014 National Fire Protection Association (NFPA). Licensed, by agreement, for individual use and download on October 4, 2014 to LEADER and READER for designated user PATTARAPORN SRITRAKOOL. No other reproduction or transmission in any form permitted without written permission of NFPA. For inquires or to report unauthorized use, contact licensing@nfpa.org.



**Table 4.20.4 Maximum Allowed Voltage Protection Rating per Mode of Protection Provided for Different Power Distribution Systems to Which the SPD Can Be Connected**

| Power Distribution System | Line-to-Neutral | Line-to-Ground | Neutral-to-Ground | Line-to-Line |
|---|---|---|---|---|
| 120 2W + ground | 600 | 700 | 600 | — |
| 240 2W + ground | 1000 | 1000 | 1000 | — |
| 120/240 3W + ground | 600 | 700 | 600 | 1200 |
| 120/208 WYE 4W + ground | 600 | 700 | 600 | 1200 |
| 277/480 WYE 4W + ground | 1200 | 1200 | 1200 | 1800 |
| 277/480 WYE 4W + HRG (high resistance ground) | 1200 | 1200 | 1200 | 1800 |
| 347/600 WYE 4W + ground | 1800 | 1800 | 1800 | 4000 |
| 240 DELTA 3W + ground (corner grounded) | — | 1000 | — | 1000 |
| 240 DELTA 3W (ungrounded) | — | 1000 | — | 1000 |
| 480 DELTA 3W + ground (corner grounded) | — | 1800 | — | 1800 |
| 480 DELTA 3W (ungrounded) | — | 1800 | — | 1800 |

**4.20.5.3** The protection of service entrances shall use Type 1 or Type 2 SPDs, in compliance with applicable standards such as ANSI/UL 1449, *Standard for Safety for Surge Protective Devices*.

**4.20.5.4** SPDs at grounded service entrances shall be wired in a line-to-ground (L–G) or line-to-neutral (L–N) configuration.

**4.20.5.4.1** Additional modes, line-to-line (L–L), or neutral-to-ground (N–G) shall be permitted at the service entrance.

**4.20.5.4.2** For services without a neutral, SPD elements shall be connected line-to-ground (L–G). Additional line-to-line (L–L) connections shall also be permitted.

**4.20.6 Communications Surge Protection.**

**4.20.6.1*** SPDs shall be provided for all communications systems (including, but not limited to, CATV, alarm, and data) and antenna systems at facility entrances.

**4.20.6.2** The selection of SPDs shall take into consideration aspects such as the frequency, bandwidth, and voltage.

**4.20.6.3** Losses (such as returns loss, insertion loss, impedance mismatch, or other attenuation) introduced by the SPD(s) shall be within acceptable operational limits.

**4.20.6.4** SPDs protecting communications systems shall be grounded.

**4.20.6.4.1*** SPDs protecting communications systems shall be grounded in accordance with *NFPA 70, National Electrical Code*, Chapter 8.

**4.20.6.4.2** If the point of grounding in 4.20.6.4.1 is more than 20 ft (6 m) away, a supplementary ground reference point shall be installed at the SPD location. Acceptable supplementary ground reference points shall be permitted as follows:

(1) Equipotential ground bus bar
(2) Structural steel for a structural steel frame building
(3) Ground reference at a secondary power distribution panel

**4.20.6.4.3** SPDs shall not be grounded through a down conductor of the lightning protection system.

**4.20.6.4.4*** SPDs for data and signal line protection shall provide common mode protection.

**4.20.6.5 Utility-Owned Communication Equipment.**

**4.20.6.5.1** SPDs shall be provided on all proprietary equipment by the communication utility provider or the tenant communication utility.

**4.20.6.5.2** SPDs shall not be required if the service provider has made other provisions for lightning surge threats.

**4.20.7 Installation.**

**4.20.7.1** Installation of surge suppression hardware shall conform to the requirements of *NFPA 70, National Electrical Code*.

**4.20.7.2*** SPDs shall be located and installed so as to minimize lead length. Interconnecting leads shall be routed so as to avoid sharp bends or kinks.

**4.20.7.3** The SPD grounding conductor shall be installed in accordance with the manufacturer's instructions.

**4.20.7.4*** All SPD components shall be accessible for inspection and maintenance.

**4.20.8* Earth Grounding Electrode.** Resistance of the earth electrode system used in the grounding of SPDs shall comply with *NFPA 70, National Electrical Code*.

**4.20.9 Physical Characteristics.**

**4.20.9.1** The SPDs shall be protected with consideration for the operational environment and according to the manufacturer's instructions.

**4.20.9.2** Enclosures and other ancillary equipment shall be listed for the purpose.

## Chapter 5 Protection for Miscellaneous Structures and Special Occupancies

**5.1 General.** All requirements of Chapter 4 shall apply except as modified by this chapter.

**5.2 Masts, Spires, Flagpoles.**

**5.2.1** These slender structures shall require one strike termination device, down conductor, and grounding electrode.

Copyright 2014 National Fire Protection Association (NFPA). Licensed, by agreement, for individual use and download on October 4, 2014 to LEADER and READER for designated user PATTARAPORN SRITRAKOOL. No other reproduction or transmission in any form permitted without written permission of NFPA. For inquires or to report unauthorized use, contact licensing@nfpa.org.



**5.2.2** Electrically continuous metal structures shall require only bonding to a grounding electrode or electrodes.

**5.3 Grain-, Coal-, and Coke-Handling and -Processing Structures.** Provisions shall be made for the settling and rising of wood frame elevators as grain, coal, and coke are loaded and unloaded.

**5.4 Metal Towers and Tanks.** Metal towers and tanks constructed so as to receive a stroke of lightning without damage shall require only bonding to grounding electrodes as required in Chapter 4, except as provided in Chapter 7.

**5.5 Air-Inflated Structures.** Air-inflated structures shall be protected with strike termination devices mounted directly on the structure, with a mast-type or a catenary lightning protection system in accordance with Chapter 4.

**5.6 Concrete Tanks and Silos.** Lightning protection systems for concrete (including prestressed concrete) tanks containing flammable vapors, flammable gases, and liquids that produce flammable vapors and for concrete silos containing materials susceptible to dust explosions shall be provided with either external conductors or with conductors embedded in the concrete in accordance with Chapter 4 or Chapter 7.

**5.7 Guyed Structures.** Each metal guy cable shall be bonded at its lower end with a main-size conductor to all other guy cables sharing a common anchor point, and grounded at the anchor point.

**5.7.1** Anchor plates shall be bonded to the anchor ground point.

**5.7.2** Multiple guy cables shall be permitted to be connected to a common point with a single continuous conductor to the ground and the anchor plate bonding conductor attached to that main conductor.

**5.7.3** Each metal guy cable shall be bonded at its upper end to the structure it supports if it is constructed of a conductive material, and to the lightning protection system loop conductor or down conductors.

**5.8 Roof Top Helipads.** Roof top helipads on a protected structure shall be protected in accordance with Chapter 4 except as permitted by 5.8.1 through 5.8.7.

**5.8.1*** The metal frame of the structure or the metal frame of the safety net at the perimeter of the pad shall be permitted to serve as a strike termination device.

**5.8.2** If adjacent sections of the perimeter metal frame or metal frame of the safety net are not electrically continuous through their mounting system, they shall be connected together with a main-size conductor.

**5.8.3** Where lights are installed at the perimeter of the pad and extend above the edge of the helipad, air terminals shall be installed adjacent to the fixture.

**5.8.4** The structural metal frame of the helipad shall be connected to the lightning protection system at a minimum of two places in accordance with 4.19.3.

**5.8.4.1** Connections shall be installed at intervals not to exceed an average of 100 ft (30 m) around the perimeter of the pad, as widely spaced as practicable.

**5.8.4.2** Clamps and conductors shall be installed at or below the elevation of the safety net frame.

**5.8.4.3** Clamps and conductors shall be secured against vibration and rotor wash.

**5.8.5** All exposed components shall be nonreflective or treated with a nonreflective finish.

**5.8.6*** Helipads used for parking shall have a designated point to connect the helicopter to the lightning protection system while parked.

**5.8.7** All components of the lightning protection and grounding systems shall be located so as not to interfere with helicopter operations.

## Chapter 6 Protection for Heavy-Duty Stacks

**6.1 General.** A smoke or vent stack as shown in Figure 6.1 shall be classified as heavy duty if the cross-sectional area of the flue is greater than 500 in.$^2$ (0.3 m$^2$) and the height is greater than 75 ft (23 m).

*A:* 8 ft (2.4 m) maximum spacing of air terminals
*B:* All lightning protection materials on upper 25 ft (7.6 m) of stack to be lead-covered copper, stainless steel, or approved corrosion-resistant material

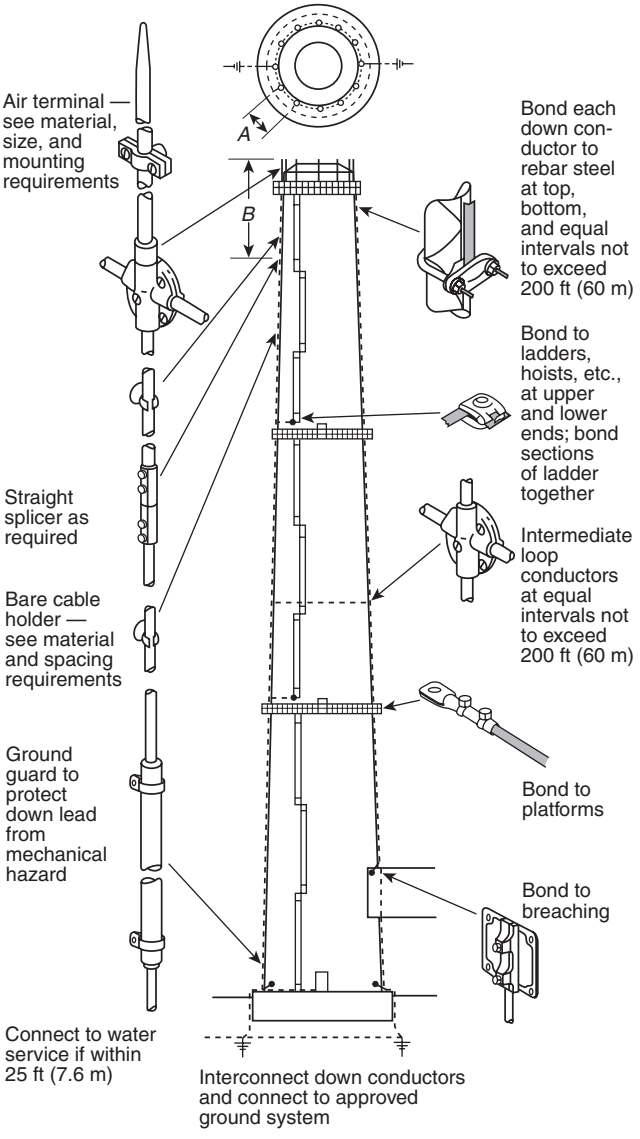


**FIGURE 6.1 Heavy-Duty Stack.**

Copyright 2014 National Fire Protection Association (NFPA). Licensed, by agreement, for individual use and download on October 4, 2014 to LEADER and READER for designated user PATTARAPORN SRITRAKOOL. No other reproduction or transmission in any form permitted without written permission of NFPA. For inquires or to report unauthorized use, contact licensing@nfpa.org.



**6.2 Materials.**

**6.2.1 General.** Materials shall be Class II as shown in Table 4.1.1.1.2 and as described in this chapter.

**6.2.2 Corrosion Protection.** Copper and bronze materials used on the upper 25 ft (7.6 m) of a stack shall have a continuous covering of lead having a minimum thickness of 0.064 in. (1.63 mm) to resist corrosion by flue gases.

**6.2.2.1** Such materials shall include conductors, strike termination devices, connectors, splicers, and cable holders.

**6.2.2.2** Stacks that extend through a roof less than 25 ft (7.6 m) shall have a lead covering only on those materials above the roof level.

**6.3 Strike Termination Devices.** Strike termination devices shall be made of solid copper, stainless steel, titanium, or Monel® metal.

**6.3.1** They shall be located uniformly around the top of cylindrical stacks at intervals not exceeding 8 ft (2.4 m).

**6.3.2** On square or rectangular stacks, strike termination devices shall be located not more than 24 in. (600 mm) from the corners and shall be spaced not more than 8 ft (2.4 m) apart around the perimeter.

**6.3.3 Air Terminal Heights.** The height of air terminals above the stacks shall be not less than 18 in. (460 mm) or more than 30 in. (760 mm).

**6.3.3.1** They shall be at least ⅝ in. (15 mm) in diameter, exclusive of the corrosion protection.

**6.3.3.2** Top-mounted air terminals shall not extend more than 18 in. (460 mm) above the top of the stack.

**6.3.4 Air Terminal Mountings.**

**6.3.4.1** Air terminals shall be secured to the stack and shall be connected together at their lower end with a conductor forming a closed loop around the stack.

**6.3.4.2** Side-mounted air terminals shall be secured to the stack at not less than two locations.

**6.3.4.3** An anchored base connector shall be considered as one location.

**6.3.5 Steel Hoods.**

**6.3.5.1** An electrically continuous steel hood covering the stack lining and column, having a metal thickness of not less than 3⁄16 in. (4.8 mm), shall be permitted to serve as the strike termination device.

**6.3.5.2** The hood serves as a top loop conductor and shall be connected to each down conductor using a connection plate of not less than 8 $in.^2$ (5200 $mm^2$) bolted or welded to the hood.

**6.4 Conductors.**

**6.4.1 General.**

**6.4.1.1** Conductors shall be copper, weighing not less than 375 lb per 1000 ft (558 g per m) without the lead coating, or approved corrosion-resistant material or coating.

**6.4.1.2** The size of any wire in the conductor shall be not less than 15 AWG.

**6.4.2 Down Conductors.**

**6.4.2.1** No fewer than two down conductors shall be provided.

**6.4.2.2** Down conductors shall be as equally spaced as practicable around the stack.

**6.4.2.3** Down conductors shall lead from the loop conductor at the top to grounding electrodes.

**6.4.2.4** Down conductors shall be interconnected within 12 ft (3.6 m) of the base by a loop conductor, preferably below grade.

**6.4.2.5** The down conductor also shall be interconnected with a loop conductor at intervals not exceeding 200 ft (60 m).

**6.4.2.6** Down conductors shall be protected from physical damage or displacement for a distance of not less than 8 ft (2.4 m) above grade.

**6.5 Fasteners.**

**6.5.1** Fasteners shall be of copper, bronze, or stainless steel.

**6.5.2** Fasteners shall be anchored to the stack by masonry anchors or lay-in attachments.

**6.5.3** The threaded shank of fasteners shall be not less than ½ in. (12.7 mm) diameter for air terminals and ⅜ in. (10 mm) diameter for conductors.

**6.5.4** Vertical conductors shall be fastened at intervals not exceeding 4 ft (1.2 m).

**6.5.5** Horizontal conductors shall be fastened at intervals not exceeding 2 ft (0.6 m).

**6.6 Splices.**

**6.6.1** Splices in conductors shall be as few as practicable.

**6.6.2** Splices in conductors shall be attached so as to withstand a pull test of 200 lb (890 N).

**6.6.3** All connections and splices shall be by bolting, brazing, welding, or high-compression connectors listed for the purpose.

**6.6.4** All connectors and splicers shall make contact with the conductor for a distance not less than 1½ in. (38 mm), measured parallel to the axis of the conductor.

**6.7 Reinforced Concrete Stacks.**

**6.7.1** All reinforcing steel shall be made electrically continuous and bonded to each down conductor within 12 ft (3.6 m) of the top and base of the stack and at intervals not to exceed 200 ft (60 m).

**6.7.2** Tying or clipping of reinforcing steel shall be a permitted means of ensuring continuity.

**6.7.3** Clamps or welding shall be used for all connections to the reinforcing steel and to the down conductors.

**6.8 Bonding of Metal Bodies.** Bonding of metal bodies on a heavy-duty stack shall comply with the requirements of Sections 4.15 and 4.16 and as described in this section.

**6.8.1 Potential Equalization.** Potential equalization shall be accomplished by 6.8.1.1 through 6.8.1.3.

**6.8.1.1 Ground Level of Stack.**

**6.8.1.1.1** All interior and exterior grounded media shall be interconnected by a loop conductor within 12 ft (3.6 m) of the base of the stack.

**6.8.1.1.2** This interconnection shall include, but not be limited to, lightning protection down conductors, conduit, piping, elevators, ladders, and breeching steel and reinforcing steel.

Copyright 2014 National Fire Protection Association (NFPA). Licensed, by agreement, for individual use and download on October 4, 2014 to LEADER and READER for designated user PATTARAPORN SRITRAKOOL. No other reproduction or transmission in any form permitted without written permission of NFPA. For inquires or to report unauthorized use, contact licensing@nfpa.org.



**6.8.1.2 Top Level of Stack.** All interior and exterior grounded media shall be interconnected within 12 ft (3.6 m) of the top of the stack.

**6.8.1.3 Intermediate Levels of Stack.** All interior and exterior vertical grounded media shall be interconnected at intervals not to exceed 200 ft (60 m).

**6.8.2 Isolated (Ungrounded) Protruding Metal Bodies.** Isolated (ungrounded) protruding metal bodies shall be bonded in accordance with 6.8.2.1 through 6.8.2.2.

**6.8.2.1 Exterior.**

**6.8.2.1.1** Isolated protruding metal bodies 150 ft (46 m) or more above the base and on the exterior of a stack are subject to a direct strike and shall be interconnected to the lightning protection system.

**6.8.2.1.2** Isolated protruding metal bodies shall include, but not be limited to, rest platforms, jib hoists, and other metal bodies protruding 18 in. (460 mm) or more from the column wall.

**6.8.2.2 Interior.** Isolated metal bodies on the interior of a reinforced steel stack or within the zone of protection on the exterior shall not be required to be connected to the lightning protection system.

**6.9* Grounding.**

**6.9.1** A grounding electrode suitable for the soil conditions encountered shall be provided for each down conductor.

**6.9.2** Grounding electrodes shall be in accordance with Section 4.13, except ground rods shall be a copper-clad or stainless steel rod having a diameter of not less than 5⁄8 in. (15 mm) and shall be at least 10 ft (3 m) in length.

**6.10 Metal Stacks.**

**6.10.1** Heavy-duty metal stacks having a metal thickness of 3⁄16 in. (4.8 mm) or greater shall not require air terminals or down conductors.

**6.10.2** The metal stacks of 6.10.1 shall be grounded by at least two grounding electrodes as equally spaced as practicable around the stack.

**6.10.3** If the stack is an adjunct of a building or located within the sideflash distance, as determined by Sections 4.15 and 4.16, it shall be interconnected to the lightning protection system on the building.

**6.10.4** If the stack is located within the perimeter of a protected building, two connections shall be made between the stack conductors and the nearest main building lightning conductors at or about the roof level.

**6.11 Metal Guy Wires and Cables.** Metal guy wires and cables used to support stacks shall be grounded at their lower ends.

## Chapter 7 Protection for Structures Containing Flammable Vapors, Flammable Gases, or Liquids That Can Give Off Flammable Vapors

**7.1 Reduction of Damage.**

**7.1.1* Application.**

**7.1.1.1** This chapter shall apply to the protection of structures containing flammable vapors, flammable gases, or liquids that give off flammable vapors.

**7.1.1.2** For the purpose of this chapter, the term *structure* shall apply to any outdoor vessel, tank, or other container where this material is contained.

**7.1.2** Certain types of structures used for the storage of liquids that produce flammable vapors or used to store flammable gases are essentially self-protecting against damage from lightning strokes and shall need no additional protection.

**7.1.2.1** Metallic structures that are electrically continuous; tightly sealed to prevent the escape of liquids, vapors, or gases; and of 3⁄16 in. (4.8 mm) thickness or greater to withstand direct strikes in accordance with 7.3.2 shall be considered to be inherently self-protecting.

**7.1.2.2** Protection of other structures shall be achieved by the use of strike termination devices.

**7.1.3*** Because of the nature of the contents of the structures considered in this chapter, extra precautions shall be taken.

**7.2 Fundamental Principles of Protection.** Protection of these structures and their contents from lightning damage shall require adherence to the principles of 7.2.1 through 7.2.5.

**7.2.1** Liquids that give off flammable vapors shall be stored in essentially gastight structures.

**7.2.2** Openings where flammable concentrations of vapor or gas escape to the atmosphere shall be closed or otherwise protected against the entrance of flame.

**7.2.3** Structures and all appurtenances (e.g., gauge hatches, vent valves) shall be maintained in operating condition.

**7.2.4** Flammable air–vapor mixtures shall be prevented, to the greatest possible extent, from accumulating outside such structures.

**7.2.5** Potential spark gaps between conductive surfaces shall not be allowed at points where flammable vapors escape or accumulate.

**7.3 Protective Measures.**

**7.3.1 Materials and Installation.** Conductors, strike termination devices, surge protection, and grounding connections shall be selected and installed in accordance with the requirements of Chapter 4 and as described in this chapter.

**7.3.2 Zone of Protection for Masts and Overhead Ground Wires.**

**7.3.2.1** The zone of protection of a lightning protection mast shall be based on the striking distance of the lightning stroke.

**7.3.2.2** Since the lightning stroke can strike any grounded object within the striking distance of the point from which final breakdown to ground occurs, the zone of protection shall be defined by a circular arc concave upward, shown in part (a) of Figure 7.3.2.2.

**7.3.2.3** The radius of the arc is the striking distance, and the arc shall pass through the tip of the mast and be tangent to the ground.

Copyright 2014 National Fire Protection Association (NFPA). Licensed, by agreement, for individual use and download on October 4, 2014 to LEADER and READER for designated user PATTARAPORN SRITRAKOOL. No other reproduction or transmission in any form permitted without written permission of NFPA. For inquires or to report unauthorized use, contact licensing@nfpa.org.



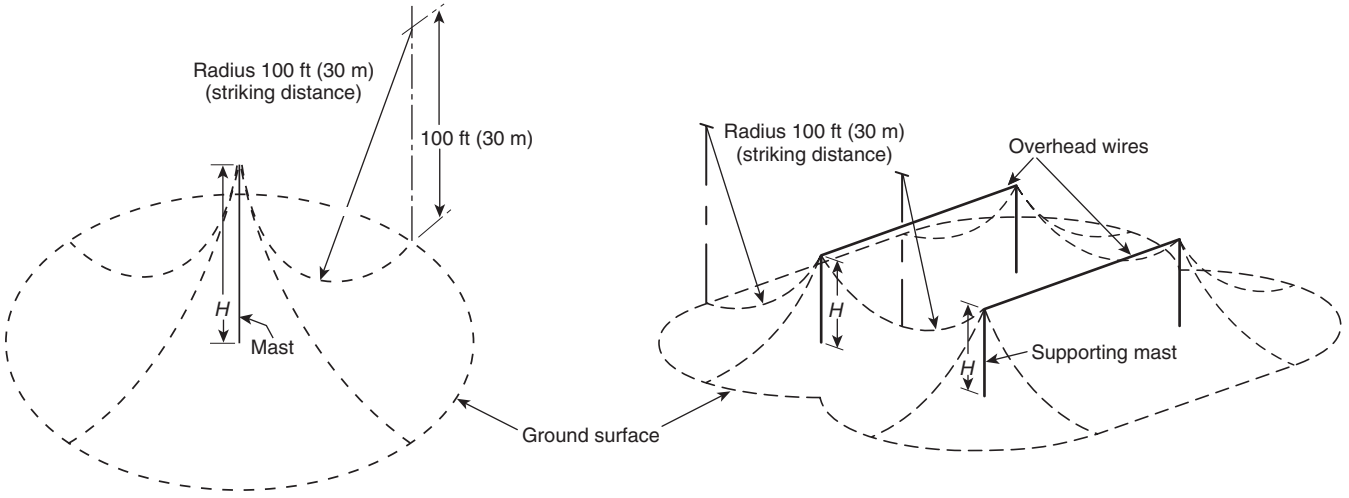


**(a) Single Mast**
Zone of protection defined by dashed lines

**(b) Overhead Ground Wires**
Zone of protection defined by ground wire(s) and dashed lines

**FIGURE 7.3.2.2 Single Mast Zone of Protection (a) and Overhead Ground Wires Zone of Protection (b).**

**7.3.2.4*** Where more than one mast is used, the arc shall pass through the tips of adjacent masts, as shown in part (b) of Figure 7.3.2.2 and in Figure 7.3.2.4. The distance can be determined analytically for a 100 ft (30 m) striking distance with the following equation (units shall be consistent, ft or m):

$$d = \sqrt{h_1(2R - h_1)} - \sqrt{h_2(2R - h_2)}$$

where:
$d$ = horizontal protected distance
$h_1$ = height of the higher mast
$R$ = rolling sphere radius [100 ft (30 m)]
$h_2$ = height of the lower mast

**7.3.2.5** The zone of protection shall be based on a striking distance of 100 ft (30 m) or less.

**7.3.2.6 Overhead Ground Wire.**

**7.3.2.6.1** The zone of protection of an overhead ground wire shall be based on a striking distance of 100 ft (30 m) and defined by 100 ft (30 m) radius arcs concave upward. *[See part (b) of Figure 7.3.2.2.]*

**7.3.2.6.2** The supporting masts shall have a clearance from the protected structure in accordance with 4.6.5.

**7.3.2.6.3** The masts or overhead ground wires shall be grounded and interconnected with the grounding system of the structure to be protected.

**7.3.2.6.4** The grounding requirements of Chapter 4 shall apply.

**7.3.2.7 Alternative Grounding Methods.**

**7.3.2.7.1** Masts of wood, used either separately or with ground wires, shall have an air terminal extending at least 2 ft (0.6 m) above the top of the pole, attached to the pole as in Figure 7.3.2.7.1, and connected to the grounding system.

**7.3.2.7.2** As an alternative, an overhead ground wire or a down conductor, extending above or across the top of the pole, shall be permitted to be used.

**7.3.2.7.3** In the case of an overhead ground wire system, the pole guy wire shall be permitted to be used as the down conductor, provided the guy meets the requirement of 7.3.1.

**7.3.2.7.4** For grounded metallic masts, the air terminal and the down conductor shall not be required.

**7.4 Protection of Specific Classes of Structures.**

**7.4.1 Aboveground Tanks at Atmospheric Pressure Containing Flammable Vapors or Liquids That Give Off Flammable Vapors.**

**7.4.1.1* Fixed Roof Tanks (Metallic) and Tanks with Internal Floating Roofs.** Shunts or bypass conductors shall not be mandatory for lightning protection for fixed roof and internal floating roof tanks.

**7.4.1.2* External Floating Roof Tanks.**

**7.4.1.2.1 Shunt Placement.**

**7.4.1.2.1.1** The shunt-to-shell contact point shall be submerged at least 1 ft (0.3 m) below the surface of the liquid product.

**7.4.1.2.1.2** The shunt shall have as short and direct a path as possible from the conductive floating roof to the tank shell.

**7.4.1.2.1.3** The shunts shall be spaced at intervals no greater than 10 ft (3 m) around the perimeter of the floating roof.

**7.4.1.2.1.4** Above-deck shunts shall be removed when retrofitting existing tanks with submerged shunts.

**7.4.1.2.2 Shunt Description.**

**7.4.1.2.2.1** The shunts shall consist of a flexible stainless steel conductor of at least 0.031 in.$^2$ (20 mm$^2$) cross-sectional area or of other material conductors of equivalent current-carrying capacity and corrosion resistance.

**7.4.1.2.2.2** The minimum width of the shunt shall be 2 in. (50 mm).

Copyright 2014 National Fire Protection Association (NFPA). Licensed, by agreement, for individual use and download on October 4, 2014 to LEADER and READER for designated user PATTARAPORN SRITRAKOOL. No other reproduction or transmission in any form permitted without written permission of NFPA. For inquires or to report unauthorized use, contact licensing@nfpa.org.



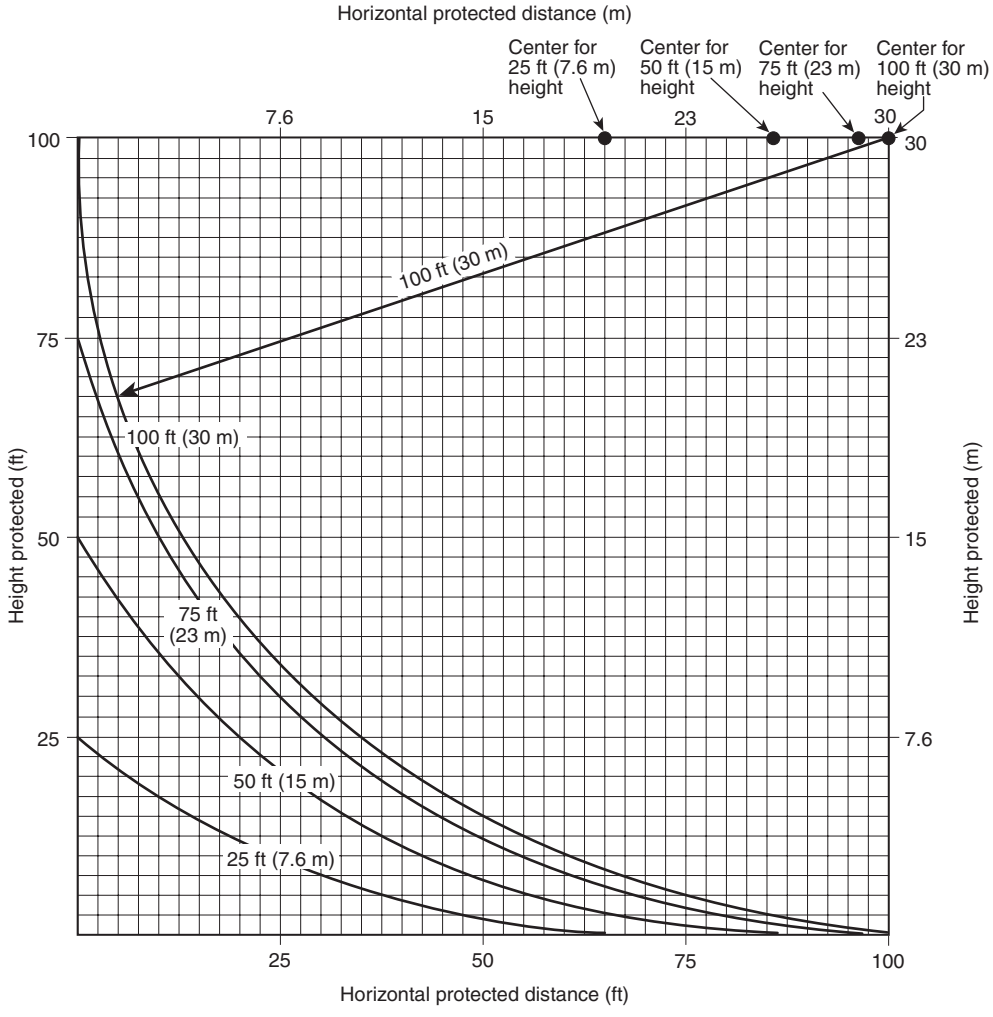


**FIGURE 7.3.2.4 Zone of Protection — 100 ft (30 m) Utilizing Rolling Sphere Method.**

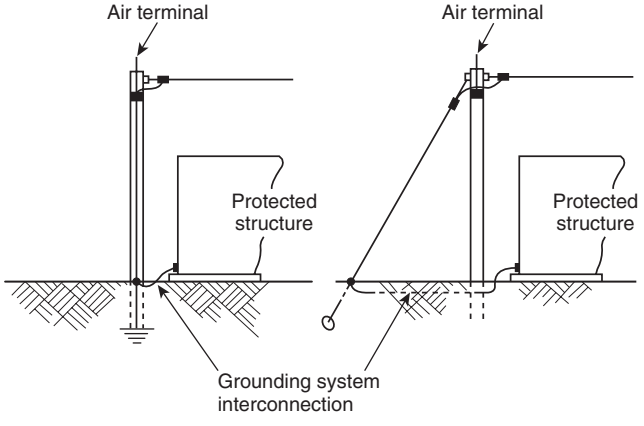


**FIGURE 7.3.2.7.1 Alternative Grounding Methods for Overhead Ground Wire Protection.**

**7.4.1.2.2.3** The shunts shall be of the minimum length necessary to permit the function of the floating roof assembly.

**7.4.1.2.2.4** The shunts shall be of the minimum length necessary to remain in contact with the shell during the full horizontal and vertical design movement of the floating roof.

**7.4.1.2.2.5*** The shunts and terminations shall be of sufficient flexibility, cross-sectional area, and corrosion resistance to maximize service life.

**7.4.1.3* Bypass Conductors.**

**7.4.1.3.1** The tank's floating roof shall be bonded to the tank shell by direct electrical connection.

**7.4.1.3.2** Each conductor, including connections, shall have a maximum end-to-end electrical resistance of 0.03 ohm.

**7.4.1.3.3** The bypass conductor shall be of the minimum length necessary to permit full movement of the floating roof.

**7.4.1.3.4** A minimum of two bypass conductors shall be evenly spaced not more than every 100 ft (30 m) around the tank circumference.

**7.4.1.3.5*** The bypass conductors and terminations shall be positioned and of sufficient flexibility, cross-sectional area, and corrosion resistance to maximize service life.

Copyright 2014 National Fire Protection Association (NFPA). Licensed, by agreement, for individual use and download on October 4, 2014 to LEADER and READER for designated user PATTARAPORN SRITRAKOOL. No other reproduction or transmission in any form permitted without written permission of NFPA. For inquires or to report unauthorized use, contact licensing@nfpa.org.



**7.4.1.4 Parallel Conducting Paths (Seal Assembly from the Floating Roof Tank).**

**7.4.1.4.1** Any non–fully submerged conductive seal assembly components, including springs, scissor assemblies, and seal membranes, shall be electrically insulated from the tank roof.

**7.4.1.4.2** The insulation level shall be rated 1 kV or greater.

**7.4.1.5 Insulation of Gauge or Guide Poles.**

**7.4.1.5.1** Any gauge or guide pole components or assemblies that penetrate the tank's floating roof shall be electrically insulated from the tank's floating roof.

**7.4.1.5.2** The insulation level shall be rated 1 kV or greater.

**7.4.1.6 Metallic Tanks with Nonmetallic Roofs.** Metallic tanks with wooden or other nonmetallic roofs shall not be considered self-protecting, even if the roof is essentially gastight and sheathed with thin metal and with all gas openings provided with flame protection.

**7.4.1.6.1** Such tanks shall be provided with strike termination devices.

**7.4.1.6.2** Such strike termination devices shall be bonded to each other, to the metallic sheathing, if any, and to the tank shell.

**7.4.1.6.3** Isolated metal parts shall be bonded as required by Section 4.16.

**7.4.1.6.4** Any of the following strike termination devices shall be permitted to be used:

(1) Conducting masts
(2) Overhead ground wires
(3) Combination of masts and overhead ground wires

**7.4.1.7 Grounding Tanks.**

**7.4.1.7.1** Tanks shall be grounded to conduct away the current of direct strokes and the buildup and potential that cause sparks to ground.

**7.4.1.7.2** A metal tank shall be grounded by one of the following methods:

(1) A tank shall be connected without insulated joints to a grounded metallic piping system.
(2) A vertical cylindrical tank shall rest on earth or concrete and shall be at least 20 ft (6 m) in diameter, or shall rest on bituminous pavement and shall be at least 50 ft (15 m) in diameter.
(3) A tank shall be bonded to ground through a minimum of two grounding electrodes, as described in Section 4.13, at maximum 100 ft (30 m) intervals along the perimeter of the tank.
(4) A tank installation using an insulating membrane beneath for environmental or other reasons shall be grounded as in 7.4.1.7.2(3).

**7.4.2 Earthen Containers at Atmospheric Pressure Containing Flammable Vapors or Liquids That Give Off Flammable Vapors.**

**7.4.2.1** Lined or unlined earthen containers with combustible roofs that enclose flammable vapors or liquids that can give off flammable vapors shall be protected by air terminals, separate masts, overhead ground wires, or a combination of these devices.

**7.4.2.2** Aboveground nonmetallic tanks shall be protected as described in 7.3.2.

## Chapter 8 Protection of Structures Housing Explosive Materials

**8.1 Application.** This chapter shall provide the minimum requirements for lightning protection of structures housing explosive materials.

**8.1.1*** The provisions of this chapter shall not be required for structures housing Hazard Division 1.4 materials, for structures housing explosives of net explosives weight (NEW) of 25 lb (11.3 kg) or less, or where exclusion is justified by a risk assessment.

**8.1.2** This chapter shall not apply to structures where the protection conflicts with airfield or flightline operations, as determined by the AHJ.

**8.1.3** Where the following conditions are met, lightning protection systems shall be permitted to be omitted:

(1)*The facility is served by an approved local lightning warning system as determined by the AHJ, and the lightning warning system permits explosives operations to be terminated before an approaching thunderstorm is within 10 mi (16 km) of the installation.
(2) All personnel are evacuated to a shelter providing adequate protection.
(3)*The resulting damage and loss from a lightning strike are acceptable to the AHJ.
(4) The facility contains only explosive materials that cannot be initiated by lightning, and where no fire hazard exists, as determined by documented tests and analyses and approved by the AHJ.
(5) Personnel are not expected to sustain injury; there will be a minimal economic loss to the structure, its contents, or the surrounding facilities; and the resulting damage and loss from a lightning strike are acceptable to the AHJ.

**8.1.4** For those locations where no strike terminations are installed, bonding and SPDs shall be installed as described in Sections 4.20, 8.5, and 8.7.

**8.2 General.**

**8.2.1 Striking Distance.** Lightning protection systems designed to protect structures housing explosives shall be based on a striking distance of 100 ft (30 m), as discussed in 7.3.2.

**8.2.2 Electromagnetic Coupling.** Where the effects of electromagnetic coupling are of concern, a mast or overhead wire (catenary) system shall be installed.

**8.3 Types of Lightning Protection.** Except as excluded by 8.1.3, structures containing explosives shall have lightning protection consisting of one or more of the types given in 8.3.1 through 8.3.4.

**8.3.1* Metallic (Faraday-Like) Cage.** Where optimum protection for structures housing explosives is required (as determined by the AHJ), a grounded, continuously conductive enclosure, as shown in Figure 8.3.1, shall be used.

**8.3.2 Single or Multiple Masts.** Mast-type systems shall be designed as specified in 4.6.5, using a striking distance of 100 ft (30 m) radius.

**8.3.2.1* Mast Lightning Protection System.** A mast-type lightning protection system shall be permitted to be remote from the structure in order to provide a primary attachment point for a lightning discharge.

Copyright 2014 National Fire Protection Association (NFPA). Licensed, by agreement, for individual use and download on October 4, 2014 to LEADER and READER for designated user PATTARAPORN SRITRAKOOL. No other reproduction or transmission in any form permitted without written permission of NFPA. For inquires or to report unauthorized use, contact licensing@nfpa.org.



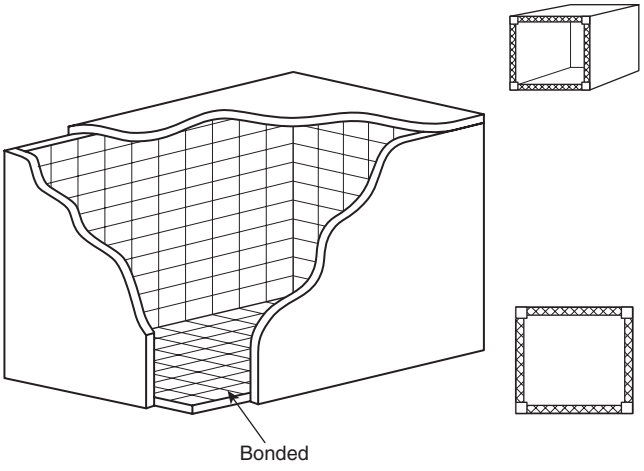


**FIGURE 8.3.1 Metallic (Faraday-Like) Cage.**

**8.3.2.1.1** Metallic masts shall be a minimum diameter of ⅝ in. (15 mm).

**8.3.2.1.2** Nonmetallic masts shall have a strike termination device or metal cap with a minimum thickness of 3/16 in. (4.8 mm) connected to ground by at least one down conductor.

**8.3.2.1.3** For nonmetallic masts using a pole guy wire as a down conductor, the guy wire shall be a continuous metal cable without any ceramic or insulating sections.

**8.3.2.1.4** Each metallic guy cable shall be bonded at its lower end to the grounding electrode(s).

**8.3.2.2 Grounding of Masts.**

**8.3.2.2.1** Grounding of masts shall comply with the requirements of Section 4.13.

**8.3.2.2.2** Metallic masts shall be grounded as shown in Figure 8.3.2.2.2.

**8.3.3 Overhead Wire (Catenary) Systems.** Catenary systems shall be designed as specified in 4.6.4, using a striking distance of 100 ft (30 m) radius.

**8.3.4* Integral Lightning Protection Systems.** Strike termination devices directly attached to the structure shall be installed as specified in Chapter 4.

**8.3.5** Bonding connections and conductor splices shall not be painted.

**8.4 Grounding.**

**8.4.1 General.** A ground ring conductor shall be required for all lightning protection systems on structures containing explosives, with all down conductors, structural steel, ground rods, and other grounding systems connected to the ground ring conductor.

*Exception No. 1: A ground ring electrode shall not be required for structures with areas of 500 ft$^2$ (46.5 m$^2$) or less or those that can be protected by a single mast or air terminal.*

*Exception No. 2: A ground ring electrode shall not be required for portable structures meeting the provisions of 8.7.5.*

**8.4.2 Concrete-Encased Electrodes.** Concrete-encased electrodes shall comply with 4.13.3.

**8.4.3 Ground Ring Electrodes.** Ground ring electrodes shall be uninsulated conductors meeting or exceeding the requirements for Class II conductors.

**8.4.3.1** Ground ring electrodes shall be augmented with a minimum of two ground rods meeting the requirements of 4.13.2.4.

**8.4.3.2** The ground ring electrode shall be installed no less than 3 ft (0.9 m) from the structure foundation or footing.

**8.4.4 Radials.** Radials shall comply with the requirements of 4.13.5.

**8.4.5 Ground Plate Electrodes.** Ground plate electrodes shall comply with 4.13.6.

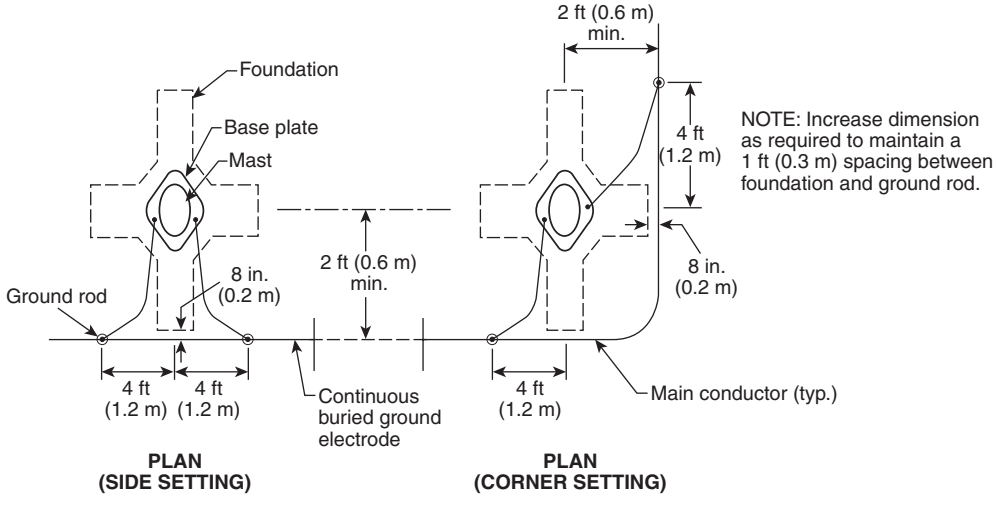


**FIGURE 8.3.2.2.2 Connection of Metallic Masts to Ground Ring Electrode.**

Copyright 2014 National Fire Protection Association (NFPA). Licensed, by agreement, for individual use and download on October 4, 2014 to LEADER and READER for designated user PATTARAPORN SRITRAKOOL. No other reproduction or transmission in any form permitted without written permission of NFPA. For inquires or to report unauthorized use, contact licensing@nfpa.org.



**8.4.6 Earth Enhancement.** Chemical grounds installed for the specific purpose of providing electrical contact with the earth or a conductor immersed in nearby salt water shall be permitted.

**8.5 Bonding.**

**8.5.1 General.** Bonding requirements for the protection of structures housing explosive materials shall comply with Section 4.16.

**8.5.2 Sideflash Distance.** Sideflash distances shall be calculated using the method in Section 4.16.

**8.5.3 Isolated Metallic Masses.** Any isolated metallic masses within the sideflash separation distance shall be bonded to the lightning protection system.

*Exception: Metallic masses with a surface area of less than 400 in.$^2$ (0.26 m$^2$) or a volume of less than 1000 in.$^3$ (1.64 × 10$^4$ cm$^3$) shall not be required to be bonded.*

**8.5.4 Direct Bonding Techniques.** Direct bonding techniques shall include the following:

(1) Welding
(2) Brazing
(3) Bolting
(4) Riveting

**8.5.4.1** Soft soldering shall not be permitted.

**8.5.4.2** Self-tapping screws shall not be used for bonding purposes.

**8.5.4.3** After completion of the joining process, the bond region shall be sealed with appropriate protective agents to prevent bond deterioration through corrosion of the mating surfaces.

**8.5.5 Access Doors.**

**8.5.5.1** All metallic doors permitting access to the structure shall be bonded to the ground ring electrode.

**8.5.5.2** Frames of roll-up or slatted doors shall be bonded to the ground ring electrode.

**8.5.6 Metallic Barricades or Bollards.** Metallic barricades and bollards within the sideflash distance as calculated per Section 4.16 shall be bonded to the ground ring electrode using a buried conductor.

**8.5.7 Railroad Tracks.** All railroad tracks that are located within 6 ft (1.8 m) of a facility housing explosives shall be bonded to the lightning protection system ground ring electrode.

**8.5.8** Where railroad tracks provide electrical signaling, insulated joints shall be provided to isolate railroad siding tracks from the main railroad track.

**8.5.8.1** Siding tracks shall provide external bonds for bonding to the facility's ground ring electrode.

**8.5.8.2** Where railroad tracks enter a facility, they also shall be bonded to the frame of the structure or facility.

**8.6 Surge Protection.** Surge protection as described in Section 4.20 shall be required for all power, communications, and data conductors entering or exiting a structure housing explosives.

**8.6.1** Power and metallic communications lines (including intrusion detection lines) shall enter the facility in shielded cables or metallic conduit run underground for at least 50 ft (15 m) from the structure.

**8.6.2** Conduits shall be bonded to the ground ring electrode where they cross.

**8.6.3** Use of low-pass filters shall be permitted for added protection on critical electronic loads as determined by the AHJ.

**8.7 Protection for Specific Facilities.**

**8.7.1 Earth-Covered Magazines.** Lightning protection on earth-covered magazines shall be installed as specified in Chapter 4, except as modified below.

**8.7.1.1** Air terminals shall be placed on the headwall, the rear ventilator (if present), and at the perimeter of the magazine roof as required to obtain a 100 ft (30 m) radius zone of protection.

**8.7.1.2** Tall air terminals in the center of the magazine headwall and roof shall be permitted in lieu of perimeter air terminals only if they provide adequate protection in accordance with 8.2.1.

**8.7.1.3** The steel doors, door frames, and steel reinforcement shall be bonded to the grounding system.

**8.7.1.4** Incoming power, data, and communications systems shall be protected by SPDs in accordance with Section 4.20.

**8.7.2* Piers and Wharves.** Lightning protection systems shall be required on piers and wharves where explosive materials cannot be moved to a protected area at the approach of a thunderstorm.

**8.7.2.1** The portion of the pier or wharf used for explosive material staging shall be provided with a mast or catenary system.

**8.7.2.2** The mast or catenary system shall be interconnected with a ground ring conductor.

**8.7.2.3** An additional conductor shall be installed along the pier or wharf for bonding of all permanently installed metal objects on the pier.

**8.7.2.4** All pier and wharf ground ring conductors shall be interconnected.

**8.7.2.5** A path to earth consisting of a metal plate bonded to the additional ground ring conductor shall be permitted to create a low-resistance path by submerging in water.

**8.7.3 Cranes.** All cranes shall be provided with inner and outer ground ring conductors interconnected with each other.

**8.7.3.1** The crane shall be bonded to the inner ground ring conductor.

**8.7.3.2** Cranes shall be relocated into the lightning protection zone of protection at the approach of a thunderstorm.

**8.7.3.3** Boom and cable lifting shall be bonded to the outer ground ring conductor.

*Exception: Metal lifting hooks on cranes equipped with hook insulating links shall not be required to be bonded to any of the ground ring conductors.*

**8.7.4 Open Storage Pads.**

**8.7.4.1** Open storage pads shall be provided with a mast or catenary system.

**8.7.4.2** An additional ground ring conductor shall be installed where the following conditions exist:

(1) Explosive materials are within sideflash distance of cables or masts.
(2) Flammable gases or exposed flammable liquids are present on the pad.

Copyright 2014 National Fire Protection Association (NFPA). Licensed, by agreement, for individual use and download on October 4, 2014 to LEADER and READER for designated user PATTARAPORN SRITRAKOOL. No other reproduction or transmission in any form permitted without written permission of NFPA. For inquires or to report unauthorized use, contact licensing@nfpa.org.



**8.7.5* Metal Portable Magazines.** Portable magazines that provide equivalent protection of a metallic cage as described in 8.3.1 shall be grounded using a main conductor.

**8.7.5.1** Metal portable magazines of the box type having 3/16 in. (4.8 mm) steel or equivalent where the walls, floor, and roof are welded together shall require bonding of the doors across each hinge.

**8.7.5.2** Incoming power, data, and communications systems shall be protected by SPDs in accordance with Section 4.20.

**8.7.5.3 Single Portable Magazines.**

**8.7.5.3.1** Single portable magazines less than 25 $ft^2$ (2.3 $m^2$) (using outside dimensions) shall require two ground rods.

**8.7.5.3.2** Single portable magazines equal to or greater than 25 $ft^2$ (2.3 $m^2$) shall be grounded by using a minimum of two separate ground rods, each placed in a different corner, preferably at opposing corners.

**8.7.5.3.3** Connections to an existing ground ring electrode shall be permitted in lieu of ground rods.

**8.7.5.4 Portable Magazine Groups.**

**8.7.5.4.1** Each group shall have a minimum of two connections to earth.

**8.7.5.4.2** Groups exceeding 250 ft (76 m) in perimeter shall have a connection to earth for every 100 ft (30 m) of perimeter or fraction thereof, such that the average distance between all connections to earth does not exceed 100 ft (30 m).

**8.7.5.4.3** For small groups requiring only two connections to earth, the connections shall be placed at opposite ends of the group and as far apart as is practicable.

**8.7.5.4.4** Connections to existing ground ring electrodes shall be permitted in lieu of ground rods.

**8.7.5.4.5** All earth connections shall provide resistance to earth that is as low as practical.

**8.8 Metallic Fences.**

**8.8.1 Grounding.**

**8.8.1.1** Fences shall be grounded where located within 6 ft (1.8 m) of a structure housing explosives by interconnection with the grounding system of the structure.

**8.8.1.2** Fences meeting the criteria of 8.8.1.1 shall also be grounded within 100 ft (30 m) on both sides of where overhead power lines cross the fence.

**8.8.1.3** Gate posts through which explosives material or personnel will pass shall be grounded in accordance with 8.8.3.

**8.8.1.4** Metal single-strand fences with nonconductive posts requiring grounding in accordance with 8.8.1 shall use a main-size conductor extending the full height of the post.

**8.8.1.5** The main-size conductor discussed in 8.8.1.4 shall be bonded to each single strand to form a continuous path to ground.

**8.8.2 Bonding.**

**8.8.2.1** Fences shall be bonded across gates and other discontinuities in accordance with the requirements of 8.8.3.

**8.8.2.2** Fencing mesh covered with nonconductive material shall be bonded to posts requiring grounding by 8.8.1.

**8.8.3 Gates and Gate Posts.**

**8.8.3.1** All gate posts shall be provided with a grounding electrode meeting the requirements of Section 4.13 using a main-size conductor.

**8.8.3.2** Class I main-size conductors buried not less than 18 in. (460 mm) in depth shall interconnect posts on opposite sides of a gate.

**8.8.3.3** Gates shall be bonded to their grounded support posts using a flexible secondary-size jumper.

**8.9* Maintenance and Inspection.** A maintenance and inspection plan shall be developed for all protection systems used to protect structures housing explosives.

**8.10 Inspection, Testing, and Maintenance.** The initial installation shall be inspected by the AHJ and re-inspected and re-certified following any work done on the structure.

**8.10.1** Maintenance guidelines of the lightning protection system shall be provided at the completion of any lightning protection system installation.

**8.10.2** Maintenance personnel shall ensure that repairs of all discrepancies found during inspections are made prior to resuming explosives operations.

**8.10.3** Any indication of damage produced by a lightning strike to a structure or its lightning protection system shall be immediately documented and reported to the appropriate authority.

**8.10.4** Where permitted by the AHJ, photographic records of damage suspected to have resulted from a lightning strike shall be obtained prior to repair.

**8.10.5** To prevent personnel shock, maintenance, inspection, and testing shall not be conducted during the threat of a thunderstorm.

**8.10.6** Lightning protection systems on explosives facilities shall be inspected visually at least at 7-month intervals for evidence of corrosion or broken wires or connections.

**8.10.6.1** All necessary repairs shall be made immediately.

**8.10.6.2** Any detected damage to the system shall be entered in the test records.

**8.10.6.3** SPDs shall be inspected in accordance with the manufacturer's instructions at intervals not exceeding 7 months or when visual inspection is performed.

**8.10.7*** The lightning protection system shall be tested electrically at least every 14 months.

**8.10.7.1** The dc resistance of any single object bonded to the lightning protection system shall not exceed 1 ohm.

**8.10.7.2** The test shall be conducted in accordance with the appropriate test equipment manufacturer's instructions.

**8.10.7.3** The test shall be conducted by personnel familiar with lightning protection system testing.

**8.10.7.4** Only those instruments designed specifically for earth resistance testing shall be permitted for use in this application.

**8.10.7.5** Test instruments shall be properly maintained and calibrated in accordance with the manufacturer's instructions.

Copyright 2014 National Fire Protection Association (NFPA). Licensed, by agreement, for individual use and download on October 4, 2014 to LEADER and READER for designated user PATTARAPORN SRITRAKOOL. No other reproduction or transmission in any form permitted without written permission of NFPA. For inquires or to report unauthorized use, contact licensing@nfpa.org.



**8.10.7.6** The three-point fall-of-potential test method shall be used when measuring the resistance to earth of grounding systems for explosives facilities.

**8.10.7.7*** SPDs shall be verified operable every 12 months or after any suspected lightning strike.

**8.10.7.8** Records and test measurement data of resistance to earth and bonding tests shall be documented and shall be available for a time period acceptable to the AHJ.

**8.10.7.9*** Only qualified personnel having the necessary training and expertise shall be permitted to maintain, inspect, and test explosives facilities.

## Chapter 9 Protection for Wind Turbines

**9.1* General.** The intent of this chapter shall be to provide lightning protection requirements for wind turbine structures that comprise externally rotating blades, a nacelle, and a supporting tower.

**9.1.1** Lightning protection systems installed on wind turbines shall be installed in accordance with the provisions of this chapter.

**9.1.2*** This chapter shall not include the lightning protection of the wind turbine blades or electrical generation equipment.

**9.2 Fundamental Principle of Protection.**

**9.2.1** Placement of air terminations for the nacelle shall be determined as described in Section 4.8, assuming the blades are oriented so they provide the smallest zone of protection to the structure.

**9.2.2** The nacelle, hub, and other structural components of the wind turbine shall be substituted for air terminals and conductors, where possible, in accordance with 4.6.1.4 and Section 4.19.

**9.2.3** Air terminations, down conductors, and bonding for the protection of meteorological instruments and aircraft warning lights located on the nacelle shall be provided in accordance with Chapter 4.

**9.2.4** The blade-to-hub transition conductor shall be sized in accordance with Table 4.1.1.1.2 for main conductors and provided with a minimum required allowance and flexibility for adequate motion of the blade.

**9.2.5** The cover for the hub, referred to as the spinner, shall be protected with a strike termination device as required in Section 4.6.

**9.2.6** At least two down conductors shall be provided for the tower of the wind turbine. The down conductor requirements from the nacelle to ground shall be provided in accordance with 4.9.9.

**9.2.7** Metal bodies located outside or inside the wind turbine structure that contribute to lightning hazards because they are grounded or assist in providing a path to ground for lightning current shall be bonded to the overall lightning protection system in accordance with Sections 4.15 and 4.16.

**9.3 Protection of Electrical and Mechanical Control Systems.**

**9.3.1** Because the nacelle, hub, tower, and base structure sections of the wind turbine typically house electrical and mechanical control systems, consideration shall be given to the protection of these systems with bonding, shielding, and surge protection in accordance with the following:

(1) Separation distance and bonding techniques maintained in accordance with Sections 4.15 and 4.16
(2) Maximized distance between lightning conductors and electrical system components and electrical system cabling located on or near a ground plane
(3) Electrical system cabling magnetically shielded by either braided wire sheath or wire mesh screen or bonding of metallic conduit, cable trays, or raceways
(4) Electrical equipment that is exposed to lightning electromagnetic impulse (LEMP) located within metal enclosures
(5) Large loop areas within electrical cabling avoided
(6) SPDs installed as close as practicable to the equipment to be protected

**9.3.2** SPDs shall be in accordance with Section 4.20.

**9.4 Grounding.** Each wind turbine structure shall be equipped with a common grounding system in accordance with Section 4.14 and shall interconnect to the site grounding system, if present.

**9.4.1*** The lightning protection grounding system shall be in accordance with 4.13.1 through 4.13.8.

**9.4.2*** The grounding system shall include a ground ring electrode external to the foundation, in contact with the soil, and bonded to the foundation reinforcing steel using fittings listed for the purpose.

**9.4.3** Reinforcing steel shall be made electrically continuous throughout construction by interconnection of vertical and horizontal bars.

**9.4.4** Down conductors coursed on or in reinforced concrete construction shall be connected to the reinforcing steel at their upper and lower extremities.

**9.4.5** Other grounded media located adjacent to the base of the wind turbine shall be bonded to the grounding electrode system of the main structure in accordance with 4.14.6(4).

## Chapter 10 Protection for Watercraft

**10.1 General.**

**10.1.1** The intent of this chapter shall be to provide lightning protection requirements for watercraft while in water.

**10.1.2*** Lightning protection systems installed on watercraft shall be installed in accordance with the provisions of this chapter.

**10.2 Materials.**

**10.2.1 Corrosion.**

**10.2.1.1** The materials used in the lightning protection system shall be resistant to corrosion in a marine environment.

**10.2.1.2** The use of combinations of metals that form detrimental galvanic couples shall be prohibited where they are likely to be in contact with water.

**10.2.2 Permitted Materials.**

**10.2.2.1** Copper conductors shall be tinned.

Copyright 2014 National Fire Protection Association (NFPA). Licensed, by agreement, for individual use and download on October 4, 2014 to LEADER and READER for designated user PATTARAPORN SRITRAKOOL. No other reproduction or transmission in any form permitted without written permission of NFPA. For inquires or to report unauthorized use, contact licensing@nfpa.org.



**10.2.2.2** All copper conductors shall be of the grade required for commercial electrical work and shall have at least 95 percent of the conductivity of pure copper.

**10.2.2.3** The use of conducting materials other than copper, such as aluminum, stainless steel, and bronze, shall be permitted, provided they meet all requirements in this chapter.

**10.2.2.4*** Carbon fiber composite (CFC) shall not be used as a conductor in a lightning protection system.

**10.3 Strike Termination.**

**10.3.1* Zone of Protection.**

**10.3.1.1** The zone of protection for watercraft shall be based on a striking distance of 100 ft (30 m).

**10.3.1.2** The zone of protection afforded by any configuration of masts or other elevated conductive objects shall be determined graphically or mathematically, as shown in Figure 7.3.2.4 and Figure 10.3.1.2. The distance can be determined analytically for a 100 ft (30 m) striking distance with the following equation (units shall be consistent, ft or m):

$$d = \sqrt{h_1(2R - h_1)} - \sqrt{h_2(2R - h_2)}$$

where:
$d$ = horizontal protected distance
$h_1$ = height of strike termination device
$R$ = rolling sphere radius [100 ft (30 m)]
$h_2$ = height of object to be protected

**10.3.2 Strike Termination Devices.**

**10.3.2.1*** Strike termination devices shall meet the requirements of Section 4.6 and Table 4.1.1.1.1 and shall be located so as to provide a zone of protection that covers the entire watercraft.

**10.3.2.2** The devices shall be mechanically strong to withstand the roll and pitching action of the hull, as well as heavy weather.

**10.3.2.3** Metallic fittings such as masts, handrails, stanchions, bimini tops, outriggers, flybridges, and dinghy davits shall be permitted as strike termination devices, provided they meet the requirements of 10.3.2.1.

**10.3.3 Nonmetallic Masts.** A nonmetallic mast not within the zone of protection of a strike termination device shall be provided with at least one air terminal that meets the requirements of a strike termination device.

**10.3.3.1** An air terminal shall extend a minimum of 10 in. (254 mm) above the mast.

**10.3.3.2** The top of an air terminal shall be sufficiently high that all masthead fittings are below the surface of a 90-degree inverted cone with its apex at the top of the air terminal.

**10.3.3.3** Multiple air terminals shall be permitted to give the required zone of protection comprising overlapping zones of protection as described in 10.3.3.2.

**10.3.3.4** An air terminal shall be securely fastened to the mast and connected to a main conductor as described in 10.4.1.

**10.4 Conductors.**

**10.4.1 Main Conductor.**

**10.4.1.1*** A main conductor made of copper shall have a cross-sectional area of at least 0.033 in.$^2$ (21 mm$^2$).

**10.4.1.2** A main conductor made of aluminum shall have a cross-sectional area of at least 0.062 in.$^2$ (40 mm$^2$).

**10.4.1.3*** A conducting fitting constructed of metal other than copper or aluminum that neither contains electrical wiring nor connects conductors containing electrical wiring shall be permitted to be used as a main conductor if it has at least the cross-sectional area given by one of the following formulas:

$$A = 3.4 \times 10^2 \sqrt{\frac{\rho}{C_p D(MP)}} \text{ in.}^2$$

where:
$A$ = cross-sectional area (in.$^2$)
$\rho$ = resistivity ($\Omega$ in.)
$C_p$ = specific heat capacity (BTU/lb$_m$°F)
$D$ = density (lb$_m$/in.$^2$)
$MP$ = melting point (°F)

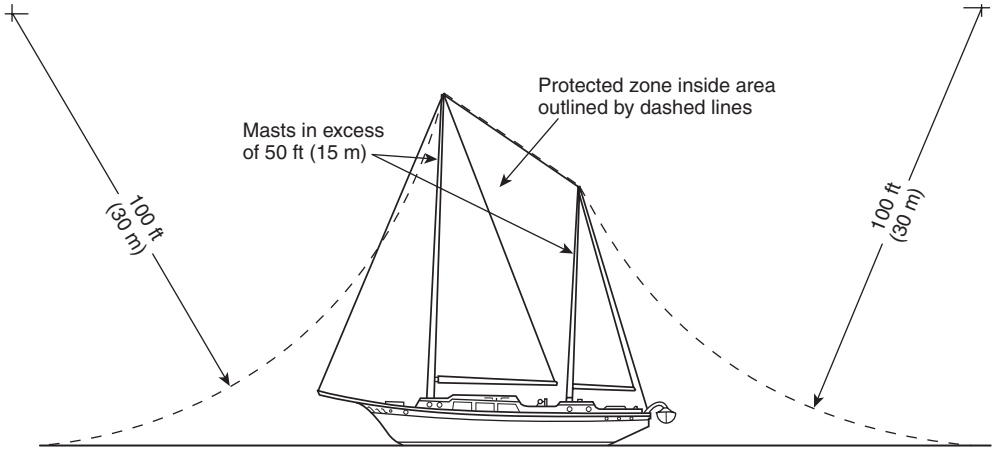


**FIGURE 10.3.1.2 Diagram of a Boat with Masts in Excess of 50 ft (15 m) Above the Water. [Protection based on lightning strike distance of 100 ft (30 m).]**

Copyright 2014 National Fire Protection Association (NFPA). Licensed, by agreement, for individual use and download on October 4, 2014 to LEADER and READER for designated user PATTARAPORN SRITRAKOOL. No other reproduction or transmission in any form permitted without written permission of NFPA. For inquires or to report unauthorized use, contact licensing@nfpa.org.



$$A = 9.7 \times 10^{9} \sqrt{\frac{\rho}{C_p D(MP - 298)}} \text{ mm}^2$$

where:
$A$ = cross-sectional area ($\text{mm}^2$)
$\rho$ = resistivity ($\Omega$ m)
$C_p$ = specific heat capacity (J $\text{kg}^{-1}$ $\text{K}^{-1}$)
$D$ = density (kg $\text{m}^{-3}$)
$MP$ = melting point (K)

**10.4.1.4*** A conducting fitting constructed of metal other than copper or aluminum that either contains electrical wiring or connects conductors containing electrical wiring shall be permitted to be used as a main conductor if it has the same or smaller dc resistance per unit length as a copper conductor with a cross-sectional area of 0.033 $\text{in.}^2$ (21 $\text{mm}^2$).

**10.4.1.5** Metallic fittings, including masts, handrails, toe rails, stanchions, through bolts, bimini tops, outriggers, flybridges, and dinghy davits, shall be permitted to be used as main conductors, provided they meet the requirements of 10.4.1.

**10.4.1.6*** Each main conductor shall be routed either directly to a grounding electrode, described in Section 10.5, or outboard of crewed areas, wiring, and electronics.

**10.4.1.7*** No main conductor shall pass within 6 in. (150 mm) of the unheeled waterline unless it is terminated in a grounding electrode *(see 10.5.4)* within 24 in. (600 mm).

**10.4.1.8** An air gap shall be permitted to break the path of a main conductor, subject to the conditions in 10.5.5.

**10.4.2 Bonding Conductor.**

**10.4.2.1** A bonding conductor made of copper shall have a cross-sectional area of at least 0.013 $\text{in.}^2$ (8.3 $\text{mm}^2$).

**10.4.2.2** A bonding conductor made of aluminum shall have a cross-sectional area of at least 0.025 $\text{in.}^2$ (16 $\text{mm}^2$).

**10.4.2.3*** A conducting fitting constructed of metal other than copper or aluminum that neither contains electrical wiring nor connects conductors containing electrical wiring shall be permitted to be used as a bonding conductor if it meets the minimum cross-sectional area given by one of the following formulas:

$$A = 1.3 \times 10^{2} \sqrt{\frac{\rho}{C_p D(MP)}} \text{ in.}^2$$

where:
$A$ = cross-sectional area ($\text{in.}^2$)
$\rho$ = resistivity ($\Omega$ in.)
$C_p$ = specific heat capacity (BTU/$\text{lb}_\text{m}$°F)
$D$ = density ($\text{lb}_\text{m}/\text{in.}^2$)
$MP$ = melting point (°F)

$$A = 3.8 \times 10^{9} \sqrt{\frac{\rho}{C_p D(MP - 298)}} \text{ mm}^2$$

where:
$A$ = cross-sectional area ($\text{mm}^2$)
$\rho$ = resistivity ($\Omega$ m)
$C_p$ = specific heat capacity (J $\text{kg}^{-1}$ $\text{K}^{-1}$)
$D$ = density (kg $\text{m}^{-3}$)
$MP$ = melting point (K)

**10.4.2.4*** A conducting fitting constructed of metal other than copper or aluminum that either contains electrical wiring or connects conductors containing electrical wiring shall be permitted to be used as a bonding conductor if it has the same or smaller dc resistance per unit length as a copper conductor with a cross-sectional area of 0.013 $\text{in.}^2$ (8.3 $\text{mm}^2$).

**10.4.2.5** Metallic fittings, including masts, handrails, toe rails, stanchions, through bolts, bimini tops, outriggers, flybridges, and dinghy davits, shall be permitted to be used as bonding conductors, provided they meet the requirements of 10.4.2.

**10.4.2.6** No bonding conductor shall pass within 6 in. (150 mm) of the unheeled waterline unless it is within 24 in. (600 mm) of a grounding electrode *(see 10.5.4)*.

**10.4.2.7*** Large metallic masses shall be connected to the loop conductor, a bonding conductor, or a main conductor with at least one bonding conductor.

**10.4.2.8** The lower end of each metallic shroud or stay shall be bonded horizontally to the loop conductor.

**10.4.2.9** The connection to the shroud or its chainplate shall be permitted to be made near deck level.

**10.4.3 Loop Conductor.**

**10.4.3.1** A main-size loop conductor shall be routed horizontally at either deck level or cabin-top level or at least 6 ft (1.8 m) above the waterline, to form a continuous conducting loop outboard of crewed areas, wiring, and electronics.

**10.4.3.2** The loop conductor shall be connected to at least one main conductor by means of a main conductor.

**10.4.4 Conductor System.**

**10.4.4.1*** All main conductors, bonding conductors, and loop conductors shall be interconnected to form the lightning conductor system.

**10.4.4.2** Each interconnection shall consist of a conductor no smaller than a bonding conductor as described in 10.4.2, or a connecting fitting satisfying the requirements in 10.4.6.

**10.4.4.3** Each joint between conductors shall satisfy the requirements in 10.4.5.

**10.4.4.4** The path between each strike termination device and each grounding electrode *(see 10.5.4)* shall be connected by at least one main conductor.

**10.4.4.5** The thickness of any copper ribbon, strip, or hollow conductor in the system shall be not less than 0.052 in. (1.3 mm).

**10.4.4.6** The thickness of any aluminum ribbon, strip, or hollow conductor in the system shall be not less than 0.064 in. (1.63 mm).

**10.4.4.7** The lightning conductor system shall be connected to both the dc and ac electric grounds using a bonding conductor.

**10.4.5 Joints.**

**10.4.5.1** Joints shall be mechanically strong and able to withstand any torque, force, or tension to be expected during normal operation.

**10.4.5.2** When a joint is made between conductors of the same material, the contact area shall be at least as large as the cross-sectional area of the conductor.

Copyright 2014 National Fire Protection Association (NFPA). Licensed, by agreement, for individual use and download on October 4, 2014 to LEADER and READER for designated user PATTARAPORN SRITRAKOOL. No other reproduction or transmission in any form permitted without written permission of NFPA. For inquires or to report unauthorized use, contact licensing@nfpa.org.



**10.4.5.2.1** Depending on the material, the contact minimum area for a joint in a main conductor shall be given by 10.4.1.1(for copper), 10.4.1.2 (for aluminum), or 10.4.1.3 (for other metals).

**10.4.5.2.2** For a joint in a bonding conductor or between a bonding conductor and a main conductor, the contact minimum area shall be given by 10.4.2.1(for copper), 10.4.2.2 (for aluminum), or 10.4.2.3 (for other metals).

**10.4.5.3** When a joint is made between two different metals, the minimum contact area shall be that required in 10.4.1.3 for a main conductor and 10.4.2.3 for a bonding conductor.

**10.4.5.4** With the exception of bimetallic connectors, direct contact between metals whose galvanic potential differs by more than 0.5 V shall not be permitted.

**10.4.5.5** For plated metals, the galvanic potential shall be that of the plating.

**10.4.5.6** No joint between metals whose galvanic potential differs by more than 0.5 V shall be permitted in locations where immersion is likely, such as the bilge, unless the joint is encapsulated in a waterproof enclosure.

**10.4.5.7** In those cases where it is impractical to avoid a junction of dissimilar metals, the corrosion effect shall be reduced by the use of plating or special connectors, such as stainless steel connectors used between aluminum and copper or copper alloys.

**10.4.6 Connecting Fittings.**

**10.4.6.1** Fittings of any length that are made of aluminum shall be permitted to join two conductors if the minimum cross-sectional area meets the requirements of 10.4.1 for main conductors or 10.4.2 for bonding conductors.

**10.4.6.2*** Connecting fittings made of metals other than aluminum or copper shall meet either of the following criteria:

(1) Have the same resistance per unit length as the corresponding type of conductor (that is, main or bonding)
(2) Have a cross-sectional area at least as large as that given in 10.4.1.3 for a main conductor or 10.4.2.3 for a bonding conductor, and have a resistance that is not more than the resistance of 2 ft (0.6 m) of the corresponding copper conductor

**10.5 Grounding.**

**10.5.1 Watercraft with Metal Hulls.** Where an electrical connection exists between a metallic hull and a lightning air terminal or other metallic superstructure of sufficient height to provide the zone of protection specified in Section 10.3, no further protection shall be necessary.

**10.5.2 Watercraft with Nonmetallic Hulls.**

**10.5.2.1*** Grounding electrodes shall be installed on the nonmetallic hull of a watercraft to provide multiple paths for the lightning current to exit into the water.

**10.5.2.2** Each grounding electrode shall be connected either directly to a main conductor or to a main conductor through an air gap that satisfies all conditions in 10.5.5.

**10.5.2.3*** Rudders, struts, seacocks, through-hull fittings, or any other metallic fittings that meet the requirements of either 10.5.4.1 or 10.5.4.2 shall be permitted to be used as grounding electrodes.

**10.5.2.4** Through-hull connectors to a grounding electrode shall be metallic and have a cross-sectional area equivalent to a main conductor.

**10.5.3 Main Grounding Electrode.**

**10.5.3.1** At least one grounding electrode shall be an immersed solid conductor that has a contact area with the water of at least 1 $ft^2$ (0.09 $m^2$), a thickness of at least 3⁄16 in. (4.8 mm), and a width of at least ¾ in. (19 mm).

**10.5.3.2** The area of a main grounding electrode shall be determined as the outward-facing area of the surface that is in contact with the water.

**10.5.3.3** A main grounding electrode shall be immersed during all normal modes of vessel operation.

**10.5.3.4** A main grounding electrode shall be permitted to be comprised of multiple immersed solid conductors that are interconnected by at least one main conductor where each conductor satisfies 10.5.3.3 and the aggregate contact area as determined by 10.5.3 is at least 1 $ft^2$ (0.09 $m^2$).

**10.5.4 Supplemental Grounding Electrode.**

**10.5.4.1*** A supplemental grounding electrode that has less than 1 $ft^2$ (0.09 $m^2$) of its area in contact with the water shall be permitted to be used.

**10.5.4.2** The outboard surface of the grounding electrode shall be less than 0.04 in. (1 mm) inside the outer finished surface of the hull, including coatings and paint.

**10.5.5* Galvanic Corrosion Protection.**

**10.5.5.1** An air gap or SPD (such as a gas discharge tube) shall be permitted to break the path of a main conductor within 8 in. (203 mm) of a grounding electrode.

**10.5.5.2** The breakdown voltage of an air gap or SPD (such as a gas discharge tube) shall be not less than 600 V and not greater than 15 kV.

**10.5.5.3** With the exception of the gap itself, all components in and connections to an air gap device shall have a cross-sectional area meeting the requirements for a main conductor.

## Chapter 11 Protection for Airfield Lighting Circuits

**11.1 General.**

**11.1.1*** This chapter shall provide the minimum requirements for the installation of a lightning protection system for airfield lighting systems and components.

**11.1.2*** Lightning protection systems for airfield lighting shall be installed entirely underground in accordance with the provisions of this chapter.

**11.2 Application.**

**11.2.1*** The airfield lighting counterpoise system shall be a separate and unique lightning protection system specifically suited for use with series (current-driven) airfield lighting circuits.

**11.2.2*** The airfield lighting counterpoise system shall also provide lightning protection for parallel (voltage-powered) circuits, control circuits, and monitoring circuits.

**11.2.3** To reduce the potential for flashover and any inductive or capacitive coupling arising from a lightning strike, the

Copyright 2014 National Fire Protection Association (NFPA). Licensed, by agreement, for individual use and download on October 4, 2014 to LEADER and READER for designated user PATTARAPORN SRITRAKOOL. No other reproduction or transmission in any form permitted without written permission of NFPA. For inquires or to report unauthorized use, contact licensing@nfpa.org.



counterpoise conductor shall be a separate conductor and not be located within any raceway used for power, communications, control, or signal conductors.

**11.2.4** All requirements of Section 4.2, Section 4.3, Section 4.4, 4.9.5, Section 4.13, and Section 4.14 shall apply, except as modified by this chapter.

**11.2.5*** An airfield lighting lightning protection system shall be permitted to be omitted by the AHJ when the average lightning flash density is two or fewer flashes per square kilometer per year.

**11.3 Purpose.**

**11.3.1** The airfield lighting counterpoise system shall provide protection for airfield lighting systems from energy arising from lightning strikes.

**11.3.2*** The airfield lighting counterpoise system shall provide a path for dissipation of lightning discharge energy to earth, minimizing damage to equipment, raceway, or cables and electrical shock to personnel.

**11.4 Installation of Airfield Lighting Counterpoise System.**

**11.4.1* Counterpoise Conductor.** The counterpoise conductor shall be a bare, annealed or soft drawn, solid copper conductor not smaller than 6 AWG.

**11.4.1.1** If bare copper counterpoise conductors are adversely affected by the installed environment, electrically conductive materials (e.g., tinned copper) as permitted by the AHJ shall be utilized.

**11.4.1.2** Electrically conductive materials shall possess the same performance, qualities, and characteristics as the copper counterpoise conductor.

**11.4.2 Counterpoise Conductor Location.** The counterpoise conductor shall be installed in accordance with 11.4.2.1 through 11.4.2.7.

**11.4.2.1** The counterpoise conductor shall be bonded to grounding electrodes at intervals not exceeding 500 ft (150 m).

**11.4.2.2** The counterpoise conductor shall be bonded to grounding electrodes located on each side of a raceway crossing under the airfield pavement.

**11.4.2.3** The airfield lighting counterpoise system shall connect to the airfield lighting vault or other airfield lighting circuit power source grounding electrode system.

**11.4.2.4*** Surge arresters shall be permitted to be installed in the airfield lighting circuit.

**11.4.2.5** Reinforcing steel, where used as part of the light base installation, shall be bonded to the metallic light base using a 6 AWG bare solid copper conductor.

**11.4.2.6*** For edge light fixtures installed in turf (stabilized soils) and for raceways or cables adjacent to the full strength pavement edge, the counterpoise conductor shall be installed either halfway between the pavement edge and the light base, mounting stake, raceway, or cable, as shown in Figure 11.4.2.6, or in accordance with 11.4.2.7.

**11.4.2.6.1** The counterpoise conductor shall be installed 8 in. (203 mm) minimum below grade.

**11.4.2.6.2*** Each light base or mounting stake shall be provided with a grounding electrode.

**11.4.2.6.2.1** When a metallic light base is used, the grounding electrode shall be bonded to the metallic light base or mounting stake with a 6 AWG bare, annealed or soft drawn, solid copper conductor.

**11.4.2.6.2.2** When a nonmetallic light base is used, the grounding electrode shall be bonded to the metallic light fixture or metallic base plate with a 6 AWG bare, annealed or soft drawn, solid copper conductor.

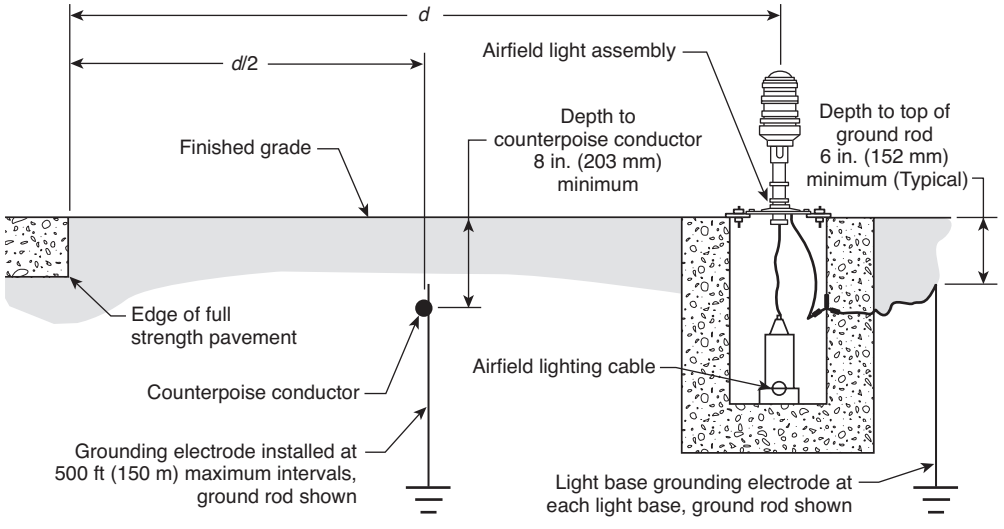


Note: Light base ground rod can be installed either through the bottom of the light base or exterior to the light base.

**FIGURE 11.4.2.6 Edge Light Fixtures Installed in Turf (Stabilized Soils) and for Raceways or Cables Adjacent to the Full Strength Pavement Edge.**

Copyright 2014 National Fire Protection Association (NFPA). Licensed, by agreement, for individual use and download on October 4, 2014 to LEADER and READER for designated user PATTARAPORN SRITRAKOOL. No other reproduction or transmission in any form permitted without written permission of NFPA. For inquires or to report unauthorized use, contact licensing@nfpa.org.



**11.4.2.7** For raceways installed under pavement; for raceways and cables not installed adjacent to the full strength pavement edge; for fixtures installed in full strength pavement and shoulder pavement and for optional method of edge lights installed in turf (stabilized soils); and for raceways or cables adjacent to the full strength pavement edge, the counterpoise conductor shall be centered over the raceway or cable to be protected as described in 11.4.2.7.1 through 11.4.2.7.8 and as shown in Figure 11.4.2.7.

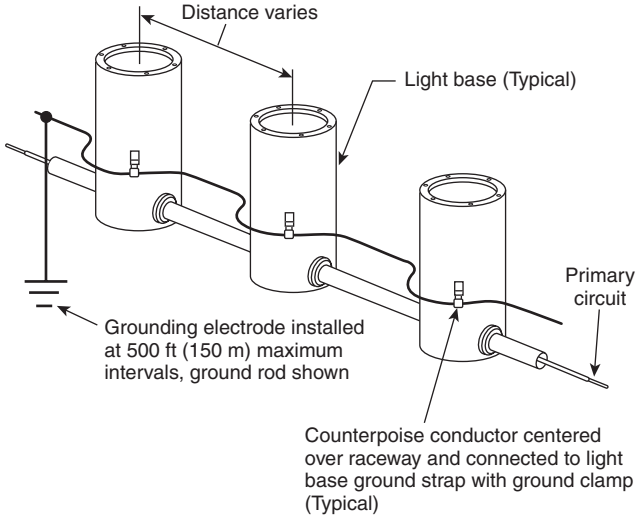


**FIGURE 11.4.2.7 Raceways Installed Under Pavement; Raceways and Cables Not Installed Adjacent to the Full Strength Pavement Edge; Fixtures Installed in Full Strength Pavement and Shoulder Pavement and Optional Method of Edge Lights Installed in Turf (Stabilized Soils); and Raceways and Cables Adjacent to Full Strength Pavement Edge.**

**11.4.2.7.1** The counterpoise conductor shall be installed no less than 8 in. (203 mm) above the raceway or cable to be protected, except as permitted in 11.4.2.7.2 and 11.4.2.7.3.

**11.4.2.7.2*** The minimum counterpoise conductor height above the raceway or cable to be protected shall be permitted to be adjusted subject to coordination with the airfield lighting and pavement designs.

**11.4.2.7.3*** Where raceway is installed by the directional bore, jack and bore, or other drilling method, the counterpoise conductor shall be permitted to be installed concurrently with the directional bore, jack and bore, or other drilling method raceway, external to the raceway or sleeve.

**11.4.2.7.4** The counterpoise conductor shall be installed no more than 12 in. (305 mm) above the raceway or cable to be protected.

**11.4.2.7.5** The counterpoise conductor height above the protected raceway(s) or cable(s) shall be calculated to ensure that the raceway or cable is within a 45-degree area of protection.

**11.4.2.7.6*** The area of protection shall be determined only by the 45-degree triangular prism area of protection method.

**11.4.2.7.7** The counterpoise conductor shall be bonded to each metallic light base, mounting stake, and metallic airfield lighting component.

**11.4.2.7.8*** All metallic airfield lighting components in the field circuit on the output side of the constant current regulator (CCR) or other power source shall be bonded to the airfield lighting counterpoise system.

**11.4.3 Multiple Raceways or Cables in a Common Formation.**

**11.4.3.1*** Multiple raceways or cables in a common formation or assembly wider than the area of protection provided by a single counterpoise conductor shall be provided with multiple counterpoise conductors.

**11.4.3.2*** As shown in Figure 11.4.3.2, the number of counterpoise conductors required shall be determined by the height of the counterpoise conductors over the raceways or cables being protected while maintaining the 45-degree area of protection.

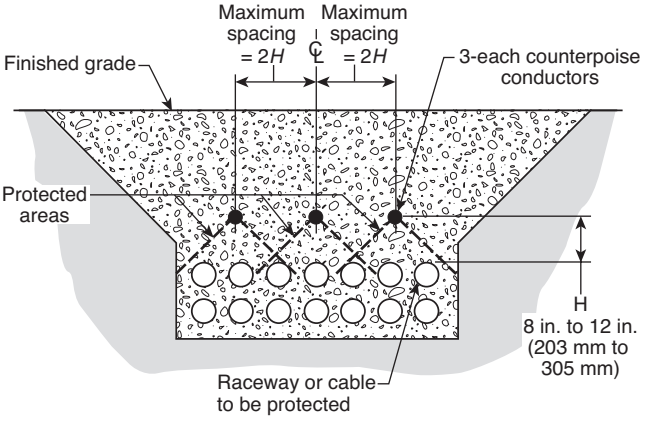


**FIGURE 11.4.3.2 Multiple Airfield Lighting Raceways or Cables in a Common Formation.**

**11.4.3.3** Where multiple counterpoise conductors are used, they shall be interconnected longitudinally at intervals not exceeding 300 ft (90 m) as shown in Figure 11.4.3.3.

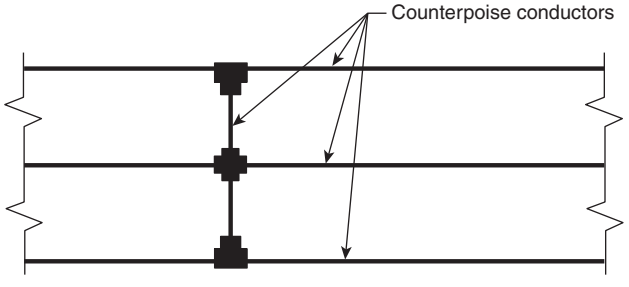


**FIGURE 11.4.3.3 Multiple Counterpoise Conductor Installation Interconnection — Plan View.**

**11.4.4 Counterpoise Conductor Interconnections.**

**11.4.4.1** Where raceways or cables cross, the counterpoise conductors shall be interconnected.

**11.4.4.2*** Where an existing airfield lighting system is being extended or modified, the new counterpoise conductors shall be interconnected to existing counterpoise conductors at

Copyright 2014 National Fire Protection Association (NFPA). Licensed, by agreement, for individual use and download on October 4, 2014 to LEADER and READER for designated user PATTARAPORN SRITRAKOOL. No other reproduction or transmission in any form permitted without written permission of NFPA. For inquires or to report unauthorized use, contact licensing@nfpa.org.



each intersection of the new and existing airfield lighting counterpoise systems.

**11.4.5 Grounding Electrodes.**

**11.4.5.1*** The counterpoise conductor shall be bonded to grounding electrodes in accordance with 11.4.2.1.

**11.4.5.2*** Grounding electrodes shall comply with all requirements of 4.13.2, 4.13.5, 4.13.6, 4.13.7, and 4.13.8, except as modified by this chapter.

**11.4.5.3** Ground rods shall not be less than ⅝ in. (15.9 mm) in diameter nor less than 8 ft (2.4 m) long.

**11.4.5.4** The top of the installed ground rod shall be 6 in. (152 mm) minimum below grade.

**11.4.6 Bonding Jumpers.** A 6 AWG stranded copper green insulated bonding jumper shall be installed between the following items:

(1) In-pavement airfield lighting fixture and the metallic light base
(2) Elevated fixture base plate and metallic light base
(3) Surge arresters and metallic light base

**11.4.6.1** A bonding jumper shall be installed between the metallic frame of the airfield lighting sign(s) or other system components not listed in 11.4.6 and its respective metallic light base.

**11.4.6.2** Bonding jumper length shall permit direct removal and maintenance of the airfield lighting component without damage to or disconnection of the bonding jumper and not interfere with the intended operation of a frangible coupling.

**11.4.6.3** Copper conductors and copper braids of equal current-carrying capacity shall be permitted as an alternative to the 6 AWG bonding jumper as permitted by the AHJ.

**11.4.6.4** Frangible couplings shall be conductive.

**11.4.6.5*** All non-current-carrying electrically conductive materials having the potential to become energized by a lightning-induced surge shall be bonded together and bonded to the airfield lighting counterpoise system.

**11.4.7* Metallic Light Base Grounding.**

**11.4.7.1** New metallic light bases shall be provided with ground straps for internal and external grounding connections.

**11.4.7.2** For existing metallic light bases without ground straps, the installation of ground straps shall not interfere with the structural integrity of the light base.

**11.4.8 Connection Requirements.**

**11.4.8.1*** All counterpoise conductor connectors, grounding connectors, and bonding connectors shall be listed with relevant standards.

**11.4.8.2** Counterpoise conductor connectors shall be listed for direct earth burial and concrete encasement.

**11.4.8.3*** Galvanically compatible connectors and fittings shall comply with 11.4.8.3.1 through 11.4.8.3.4.

**11.4.8.3.1** Galvanically compatible connectors and fittings shall be used for splicing or bonding dissimilar metals.

**11.4.8.3.2** Conductive oxide inhibitors shall be designed for the specific application and metals used in the connection.

**11.4.8.3.3** Conductive oxide inhibitors shall be applied to the mating surfaces of all connections involving dissimilar metals.

**11.4.8.3.4** Where a corrosion-protective paint or coating is removed, the electrical connection shall have corrosion protection equal to the original coating.

**11.4.8.4** Listed equipment shall be installed and used in accordance with the manufacturer's installation instructions included as part of the listing.

**11.4.8.5*** The metallic light base ground strap with ground clamp shall be used for connection of the counterpoise conductor to the light base.

**11.4.8.6*** Grounding, bonding, and counterpoise conductor connections not included in 11.4.8.1 through 11.4.8.5 shall be made by exothermic weld or irreversible crimp method.

**11.4.9 Bend Radius.** The counterpoise conductor radius of bend shall not be less than 8 in. (203 mm) nor form an included (inside) angle of less than 90 degrees, as shown in Figure 4.9.5.

## Chapter 12 Protection for Solar Arrays

**12.1 General.** The intent of this chapter shall be to provide lightning protection requirements for roof-mounted or ground-mounted solar (photovoltaic and thermal) panels.

**12.2 Fundamental Principles of Protection.**

**12.2.1** Roof-mounted or ground-mounted solar panels subject to direct lightning strike shall be protected in accordance with Chapter 4 and as supplemented in this chapter.

**12.2.2** Protection shall be provided by one or more of the following methods:

(1) Direct mounting of strike termination devices to the solar panel
(2) Direct mounting of strike termination devices to the solar panel framing
(3) Locating strike termination devices (including air terminals, masts, and overhead ground wires) adjacent to the solar panels in such a manner as to place the solar panels in a zone of protection as defined in Section 4.8

**12.3 Strike Termination Devices.**

**12.3.1** Strike termination devices shall extend a minimum of 10 in. (254 mm) vertically above the apex of the solar panel.

**12.3.2** Strike termination devices shall be located at the ends of the uppermost edge or nearest support of pitched solar panels or panel arrays not to exceed 2 ft (0.6 m) from the end of the panel or array unless the uppermost edge or nearest support is within a zone of protection.

**12.3.3** Strike termination devices shall be located along the uppermost edge of solar panels or panel arrays at intervals not exceeding 20 ft (6 m) unless the panel arrays are within a zone of protection.

Copyright 2014 National Fire Protection Association (NFPA). Licensed, by agreement, for individual use and download on October 4, 2014 to LEADER and READER for designated user PATTARAPORN SRITRAKOOL. No other reproduction or transmission in any form permitted without written permission of NFPA. For inquires or to report unauthorized use, contact licensing@nfpa.org.



**12.3.4** Solar panels or panel arrays that have a slope of less than ⅛ shall have strike termination devices located within 2 ft (0.6 m) of the outermost corners and at intervals not exceeding 20 ft (6 m) along all edges unless the corners or edges are within a zone of protection.

**12.3.4.1** Solar panel arrays that exceed 50 ft (15 m) in width or length shall comply with one of the following:

(1) Strike termination devices located at intervals not to exceed 50 ft (15 m) on the solar panel arrays, similar to Figure 4.7.5(a) and Figure 4.7.5(b)
(2) Strike termination devices that create zones of protection using the rolling sphere method so the sphere does not contact the solar panel arrays

**12.3.5** Solar panels or panel arrays that have a slope of less than ¼ and the distance from the uppermost edge to the lowermost edge along the face of the panel or array exceeds 20 ft (6 m) shall have strike termination devices located within 2 ft (0.6 m) of the outermost corners and at intervals not exceeding 20 ft (6 m) along all edges unless the corners or edges are within a zone of protection.

**12.3.6** Strike termination devices shall not be secured directly to the panels or panel frames of photovoltaic panels and arrays.

**12.3.7** Where practicable, the location of strike termination devices shall minimize the effects of shadowing the solar panels.

**12.4 Protection of Electrical and Mechanical Systems.**

**12.4.1** Where practicable, the electrical and/or electromechanical control systems shall be protected with bonding, shielding, isolation, and surge protection in accordance with the following:

(1) Separation distance and bonding techniques maintained in accordance with Sections 4.15 and 4.16
(2) Maximized distance between lightning conductors and the solar array panels, electrical control systems, and cabling
(3) SPDs installed as close as practicable to the solar arrays and electrical systems (inverters) and to the panel tracking control systems
(4) The dc solar array cabling electromagnetically shielded by either braided wire sheath or wire mesh screen or installed within electrically bonded metallic conduit, cable tray, or raceways
(5) Lightning conductors run separately and outside of the cable path of the dc cabling

**12.4.2 Surge Protection.**

**12.4.2.1** Surge protection in accordance with Section 4.20 shall be provided on the dc output of the solar panel from positive to ground and negative to ground, at the combiner and re-combiner box for multiple solar panels, and at the ac output of the inverter.

**12.4.2.2** Surge protective devices shall have a nominal discharge current rating ($I_n$) as specified in 4.20.3.1.2.

**12.4.2.3** If the system inverter is more than 100 ft (30 m) from the closest combiner or re-combiner box, additional SPDs shall be required at the dc input of the inverter.

**12.4.2.4 Maximum Continuous Operating Voltage (MCOV).**

**12.4.2.4.1** The SPD provided on the dc output shall have a dc MCOV equal to or greater than the maximum photovoltaic system voltage of the panel(s) as specified in Article 690 of *NFPA 70*.

**12.4.2.4.2** The SPD provided on the ac output shall have an ac MCOV equal to or greater than the inverter output voltage.

**12.4.2.5 Short Circuit Current Rating.**

**12.4.2.5.1** The short circuit current rating of the dc SPD shall be coordinated with the available fault current of the solar panel(s).

**12.4.2.5.2** The short circuit current rating of the ac SPD shall be coordinated with the available fault current of the inverter.

**12.4.2.6 Voltage Protection Rating (VPR).**

**12.4.2.6.1** The VPR of the dc SPD shall be a maximum of 3 times the panel's maximum photovoltaic system voltage.

**12.4.2.6.2** The VPR of the ac SPD shall be based on Table 4.20.4.

**12.4.2.6.3** For voltages exceeding the values in Table 4.20.4, the VPR shall be permitted to be 3 times the output voltage of the inverter.

**12.5 Grounding.**

**12.5.1 Ground-Mounted Systems.**

**12.5.1.1** Systems that include a metallic structure shall be grounded in accordance with 4.13.4, utilizing a ground ring electrode encompassing the perimeter of each array.

**12.5.1.1.1** Combinations of other grounding electrodes in Section 4.13 shall be permitted.

**12.5.1.1.2** Ground ring electrodes of adjacent ground-mounted systems within 25 ft (7.6 m) shall be interconnected.

**12.5.1.2** Systems that rely on the metallic structure to form parts of the lightning protection system shall be made electrically continuous by the methods specified in 4.19.3.

**12.5.1.3** For solar arrays that do not rely on the metallic structure to form part of the lightning protection system, each separate row or structure shall be bonded at one location direct to the ground ring electrode.

**12.5.1.4*** Solar arrays that do not rely on the metallic structure to form part of the lightning protection system shall be electrically continuous.

**12.5.2 Roof-Mounted Systems.**

**12.5.2.1** Solar arrays shall be bonded in accordance with Section 4.15.

**12.5.2.2*** Solar arrays shall be electrically continuous.

**12.5.2.3** If the structure forms part of or is within the required separation distance from the lightning protection system, the metallic structure of the system shall be made electrically continuous in accordance with Chapter 4.

**12.5.2.4** Roof conductors interconnecting strike termination devices protecting roof-mounted solar panels shall be provided with down conductors and grounding electrodes in accordance with Chapter 4.

**12.5.2.5** Roof conductors interconnecting strike termination devices protecting roof-mounted solar panels shall be connected to the structure lightning protection system in accordance with Chapter 4.

Copyright 2014 National Fire Protection Association (NFPA). Licensed, by agreement, for individual use and download on October 4, 2014 to LEADER and READER for designated user PATTARAPORN SRITRAKOOL. No other reproduction or transmission in any form permitted without written permission of NFPA. For inquires or to report unauthorized use, contact licensing@nfpa.org.



## Annex A Explanatory Material

*Annex A is not a part of the requirements of this NFPA document but is included for informational purposes only. This annex contains explanatory material, numbered to correspond with the applicable text paragraphs.*

**A.1.1.2** Electric generating facilities whose primary purpose is to generate electric power are excluded from this standard with regard to generation, transmission, and distribution of power. Most electrical utilities have standards covering the protection of their facilities and equipment. Installations not directly related to those areas and structures housing such installations can be protected against lightning by the provisions of this standard.

**A.1.5.2** Installation of a lightning protection system requires special skills; if the system is not installed correctly, it could be counterproductive. Certification for fitness could include review of installation experience and credentials.

**A.1.6** Guidance on an effective maintenance program is provided in Annex D.

**A.3.2.1 Approved.** The National Fire Protection Association does not approve, inspect, or certify any installations, procedures, equipment, or materials; nor does it approve or evaluate testing laboratories. In determining the acceptability of installations, procedures, equipment, or materials, the authority having jurisdiction may base acceptance on compliance with NFPA or other appropriate standards. In the absence of such standards, said authority may require evidence of proper installation, procedure, or use. The authority having jurisdiction may also refer to the listings or labeling practices of an organization that is concerned with product evaluations and is thus in a position to determine compliance with appropriate standards for the current production of listed items.

**A.3.2.2 Authority Having Jurisdiction (AHJ).** The phrase "authority having jurisdiction," or its acronym AHJ, is used in NFPA documents in a broad manner, since jurisdictions and approval agencies vary, as do their responsibilities. Where public safety is primary, the authority having jurisdiction may be a federal, state, local, or other regional department or individual such as a fire chief; fire marshal; chief of a fire prevention bureau, labor department, or health department; building official; electrical inspector; or others having statutory authority. For insurance purposes, an insurance inspection department, rating bureau, or other insurance company representative may be the authority having jurisdiction. In many circumstances, the property owner or his or her designated agent assumes the role of the authority having jurisdiction; at government installations, the commanding officer or departmental official may be the authority having jurisdiction.

**A.3.2.4 Listed.** The means for identifying listed equipment may vary for each organization concerned with product evaluation; some organizations do not recognize equipment as listed unless it is also labeled. The authority having jurisdiction should utilize the system employed by the listing organization to identify a listed product.

**A.3.3.1 Air Terminal.** Typical air terminals are formed of a tube or solid rod. Air terminals are sometimes called *lightning rods*.

**A.3.3.3 Cable.** See Table 4.1.1.1.1 and Table 4.1.1.1.2.

**A.3.3.6 Combination Waveform Generator.** For the open-circuit waveform, the front time = 1.67(t90 − t30), where t90 and t30 are times to the 90 percent and the 30 percent amplitude points on the leading edge of the waveform. The duration of this waveform will be the time between virtual origin and time to the 50 percent point on the tail. (Virtual origin is the intersection of the line connecting t90 and t30, with V = 0.)

For the short-circuit waveform, the front time = 1.25(t90 − t10), where t90 and t10 are times to the 90 percent and the 10 percent amplitude points on the leading edge of the waveform. The duration will be the time between virtual origin and time to the 50 percent point on the tail. (Virtual origin is the intersection of the line connecting t90 and t10, with I = 0.)

**A.3.3.7.5 Main Conductor.** The main conductor also serves as a strike termination device for catenary lightning protection systems.

**A.3.3.12 Flammable Air-Vapor Mixtures.** The combustion range for ordinary petroleum products, such as gasoline, is from about 1½ percent to 7½ percent of vapor by volume, the remainder being air.

**A.3.3.22 Light Base.** Type L-867 light bases and extensions are used for applications subject to occasional light vehicular loading but no aircraft or other heavy vehicular loading. Type L-868 light bases and extensions are used for applications subject to aircraft and other heavy vehicular loading. Light bases, which can be fabricated from metallic or nonmetallic materials, serve as a connection point for the raceway and housing for mounting the light fixture. Light bases are subject to direct earth burial with or without concrete backfill. Drain connections, load rings, and other options are available for the light base.

Additional information can be found in FAA Advisory Circular 150/5345-42F, *Specification for Airport Light Bases, Transformer Housings, Junction Boxes, and Accessories*.

**A.3.3.24 Lightning Protection System.** The term refers to systems as described and detailed in this standard. A traditional lightning protection system used for structures is described in Chapter 4.

**A.3.3.28.1 Class I Materials.** See Table 4.1.1.1.1.

**A.3.3.28.2 Class II Materials.** See Table 4.1.1.1.2.

**A.3.3.29 Mounting Stake.** When not installed on a light base, an elevated light fixture is installed on a mounting stake. The mounting stake is made of 2 × 2 × 3⁄16 in. (50.8 × 50.8 × 4.8 mm) steel angle stock or equivalent. The mounting stake is provided with a fitting attached at the top to receive the light fixture and frangible coupling. The length of the stake and fitting do not exceed 30 in. (762 mm).

**A.3.3.31 Raceway.** The terms *conduit*, *duct*, or *duct bank* should be considered raceways of nominally circular cross-sectional area designed to provide physical protection and routing for conductors. Where a requirement of this standard would be applicable to one raceway, it should be considered applicable to all combinations of raceways included in this item. The term *electrical ducts*, as used in *NFPA 70, National Electrical Code*, Article 310, includes electrical conduits and or other raceways that are round in cross section that are suitable for use underground or embedded in concrete.

**A.3.3.43 Voltage Protection Rating (VPR).** The VPR is a rating (or ratings) selected by the manufacturer based on the measured limiting voltage determined during the transient voltage surge suppression test specified in ANSI/UL 1449, *Standard for Surge Protective Devices*. This rating is the maximum voltage developed when the SPD is exposed to a 3 kA, 8/20 μs

Copyright 2014 National Fire Protection Association (NFPA). Licensed, by agreement, for individual use and download on October 4, 2014 to LEADER and READER for designated user PATTARAPORN SRITRAKOOL. No other reproduction or transmission in any form permitted without written permission of NFPA. For inquires or to report unauthorized use, contact licensing@nfpa.org.



current limited waveform through the device. It is a specific measured limiting voltage rating assigned to an SPD by testing done in accordance with ANSI/UL 1449, *Standard for Surge Protective Devices*. Nominal VPR values include 330 V, 400 V, 500 V, 600 V, 700 V, and so forth.

**A.4.1.1.1** Main-size lightning conductors are not manufactured to standard American Wire Gauge (AWG) sizes. Bare AWG conductors are not typically "listed for the purpose" for lightning protection by any listing authority. Table A.4.1.1.1 provides comparisons between lightning protection conductors and the closest AWG sizes are from *NFPA 70, National Electrical Code*, 2014, Chapter 9, Table 8.

**Table A.4.1.1.1 Lightning Protection Conductors**

| Lightning Conductor | Area |
|---|---|
| A. Class I main-size copper lightning conductor | 57,400 cir. mils |
| #2 AWG | 66,360 cir. mils |
| #3 AWG | 52,620 cir. mils |
| B. Class I main-size aluminum lightning conductor | 98,600 cir. mils |
| #1 AWG | 83,690 cir. mils |
| #1/0 AWG | 105,600 cir. mils |
| C. Class II main-size copper lightning conductor | 115,000 cir. mils |
| #1/0 AWG | 105,600 cir. mils |
| #2/0 AWG | 133,100 cir. mils |
| D. Class II main-size aluminum lightning conductor | 192,000 cir. mils |
| #3/0 AWG | 167,800 cir. mils |
| #4/0 AWG | 211,600 cir. mils |
| Lightning bonding conductor Copper | 26,240 cir. mils |
| #6 AWG | 26,240 cir. mils |
| Lightning bonding conductor Aluminum | 41,100 cir. mils |
| #4 AWG | 41,740 cir. mils |

**A.4.6.2.1** Recent experiments described by Moore et al. in the *Journal of Applied Meteorology* suggest that the optimal air terminal tip radius of curvature for interception of lightning strikes is 3⁄16 in. (4.8 mm) minimum to ½ in. (12.7 mm) maximum.

**A.4.6.5** The sideflash formulas are based on the impedance of main-size copper conductors. Other ground wire materials can require additional separation distance.

**A.4.6.5.2** The allowable relaxation of the length, *l*, to the length of the overhead wire for those cases where the overhead wire is supported by a metal mast is applicable only to those cases where the overhead wire is electrically connected to the metal mast. This relaxation is justified by the relative impedance of the metal mast in comparison with that of the overhead wire. It is not the intent that it be applicable for any other mast material or those cases where the overhead wire is not electrically connected to a metallic mast.

The values of $n$ are coefficients related to the division of lightning current among the down conductors provided by the masts supporting the overhead wires. For down conductors (masts) spaced greater than 25 ft (7.6 m) apart, the lightning current is considered to divide among those masts located within 100 ft (30 m) of the point of consideration when calculating the required spacing from the overhead wire(s). Because the $n$ coefficients are related to the division of current, the conductor length of consideration for determination of the value of $n$ is the horizontal run of overhead cable. This should not be confused with the determination of the length, $l$, of the lightning protection conductor between the nearest grounded point and the point being calculated.

Figure A.4.6.5.2(a) provides an example of a structure protected by a single overhead wire lightning protection system. For those cases where the length of the overhead wire exceeds 100 ft (30 m), a value of $n = 1$ is applicable. If the length of the overhead wire is less than 100 ft (30 m), a value of $n = 1.5$ is applicable because there would be two down conductors (masts) separated by more than 25 ft (7.6 m) but less than 100 ft (30 m). To obtain a value of $n = 2.25$, at least two overhead wires with a minimum of three masts would be required. Figure A.4.6.5.2(b) provides an example of a design where two overhead wires are coursed perpendicular to one another and interconnected at their midpoint. The result is a total of four down conductors located within 100 ft (30 m) of the interconnection point, leading to a value of $n = 2.25$ at that point. Moving away from the midpoint interconnection, the value of $n$ could change. In this example, the value of $n = 2.25$ is valid along the 150 ft (46 m)–long overhead wire up to 60 ft (18 m) from the point of interconnection, but it will revert to $n = 1$ at the point within 15 ft (4.5 m) of the masts. For the 80 ft (24 m)–long overhead wire, the value of $n = 2.25$ is valid for distances up to 25 ft (7.6 m) from the point of interconnection. The value of $n$ will change to $n = 1.5$ for sideflash calculations made within 15 ft (4.5 m) of the supporting masts for this overhead wire.

The value of $l$ is based on the length of the conductor from the point of sideflash consideration to the nearest grounding point. Where metallic masts are used, the masts could be considered as the ground point reference; therefore, the length $l$ could be the length of overhead wire from the point of consideration to the nearest mast. Where nonmetallic masts are used, the value of $l$ includes the length of wire to the nearest grounding system connection (typically the height of the closest mast plus the length of overhead wire to the point of consideration).

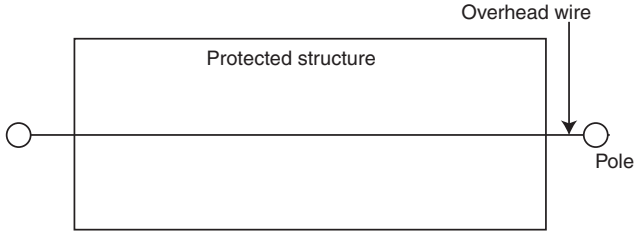


**FIGURE A.4.6.5.2(a) Single Overhead Wire Lightning Protection System.**

Copyright 2014 National Fire Protection Association (NFPA). Licensed, by agreement, for individual use and download on October 4, 2014 to LEADER and READER for designated user PATTARAPORN SRITRAKOOL. No other reproduction or transmission in any form permitted without written permission of NFPA. For inquires or to report unauthorized use, contact licensing@nfpa.org.



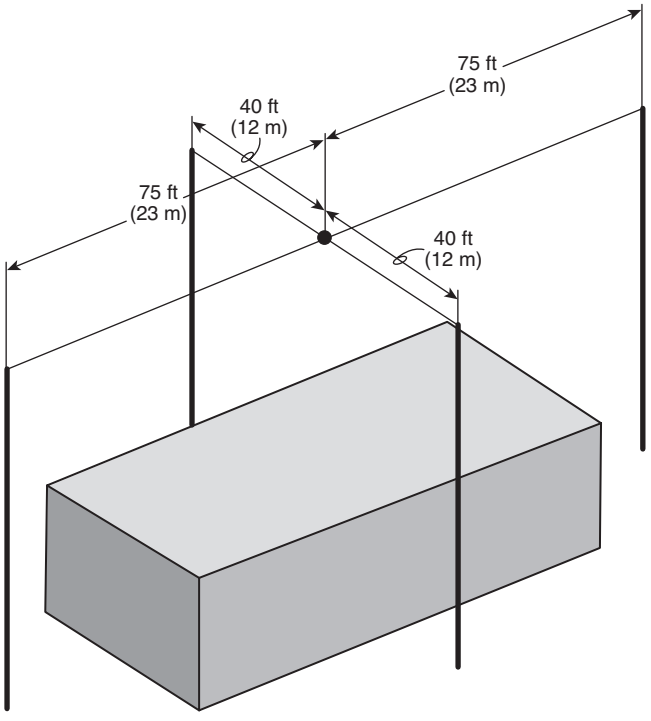


Note: Four down conductors are within 100 ft (30 m) of intersection of overhead ground wires; $n = 2.25$ at that location.

**FIGURE A.4.6.5.2(b) Overhead Wire Lightning Protection System Using Multiple Overhead Ground Wires Interconnected Above the Structure.**

**A.4.7.2** Strike termination devices should be placed as close as practicable to roof edges and outside corners.

**A.4.7.3.2.3** Research indicates that the probability of low-amplitude strikes to the vertical side of a structure of less than 60 m (200 ft) in height are low enough that they need not be considered *(see IEC 62305-3, Protection Against Lightning, Section 5.2.3.1)*. It is suggested that a wall or surface with a slope characterized by an angle from vertical of no more than 15 degrees be considered essentially vertical as it relates to the electric field gradient that could result in the generation of streamers. See Figure A.4.7.3.2.3. IEC 62305-3, Section 5.2.3.2, acknowledges that the rules for the placement of strike termination devices can be relaxed to the equivalent of IEC Lightning Protection Class IV for upper parts of tall structures where protection is provided on the top of the structure. Figure A.4.7.3.2.3 identifies the maximum values of protection angle versus class of lightning protection system based on IEC 62305-3. The 15-degree angle from vertical falls well within the limits specified for a Class IV lightning protection system at a height of 60 m (200 ft).

**A.4.7.7** Figure A.4.7.7 illustrates dormer protection.

**A.4.7.11** Consideration should be taken when using a movable metallic object as a strike termination device. If lightning is to attach to a metallic object with movable parts, there is a possibility that arcing could occur at the point of articulation between the component parts, which could possibly fuse the parts together.

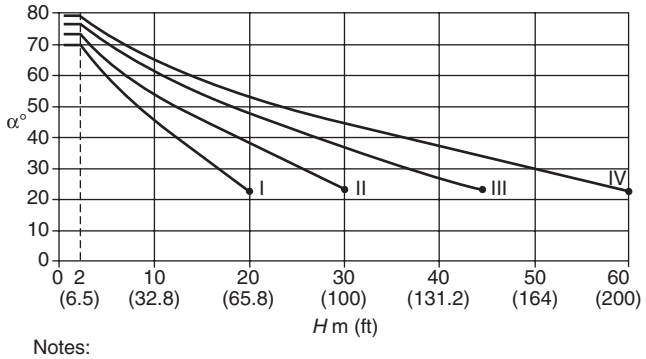


Notes:
1. $H$ is the height of air-termination above the reference plane of the area to be protected.
2. The angle will not change for values of $H$ below 1.8 m (6 ft).
3. The figure is based on data from IEC 62305–3, which uses metric values as normative.

**FIGURE A.4.7.3.2.3 Maximum Values of Protection Angle Corresponding to the Class of Lightning Protection System.** *(Source: IEC 62305-3, Protection Against Lightning — Part 3: Physical Damage to Structures and Life Hazard, Section 5.2.2.)*

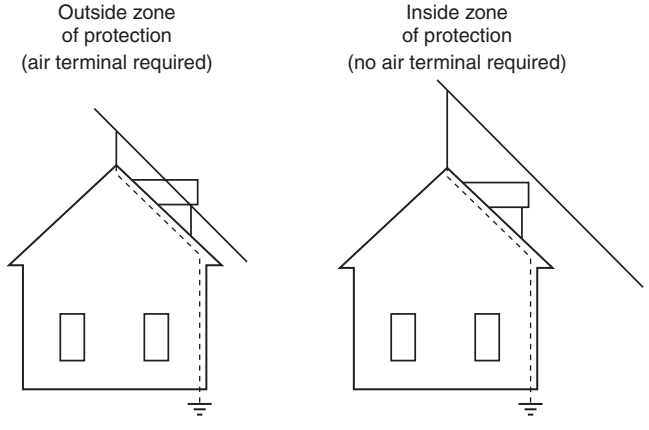


**FIGURE A.4.7.7 Dormer Protection.**

**A.4.7.11.2** Strike termination devices should be placed as close as practicable to an outside corner.

**A.4.7.13** Examples include windsocks, cranes, window washing davits, and weathervanes where connection of the supporting masts or sockets to the lightning protection system complies with the requirements of Chapter 4 and arcing within the metal object will not damage the protected structure. When lightning attaches to metallic objects with movable parts, there is a possibility that arcing could occur at the point of articulation between the component parts, which could possibly fuse the parts together.

**A.4.8.3.1** Figure A.4.8.3.1 depicts the 150 ft (46 m) rolling sphere method for structures of selected heights up to 150 ft (46 m). Based on the height of the strike termination device for a protected structure being 25 ft (7.6 m), 50 ft (15 m), 75 ft (23 m), 100 ft (30 m), or 150 ft (46 m) aboveground, reference to the appropriate curve shows the anticipated zone of protection for objects and roofs at lower elevations.

Copyright 2014 National Fire Protection Association (NFPA). Licensed, by agreement, for individual use and download on October 4, 2014 to LEADER and READER for designated user PATTARAPORN SRITRAKOOL. No other reproduction or transmission in any form permitted without written permission of NFPA. For inquires or to report unauthorized use, contact licensing@nfpa.org.



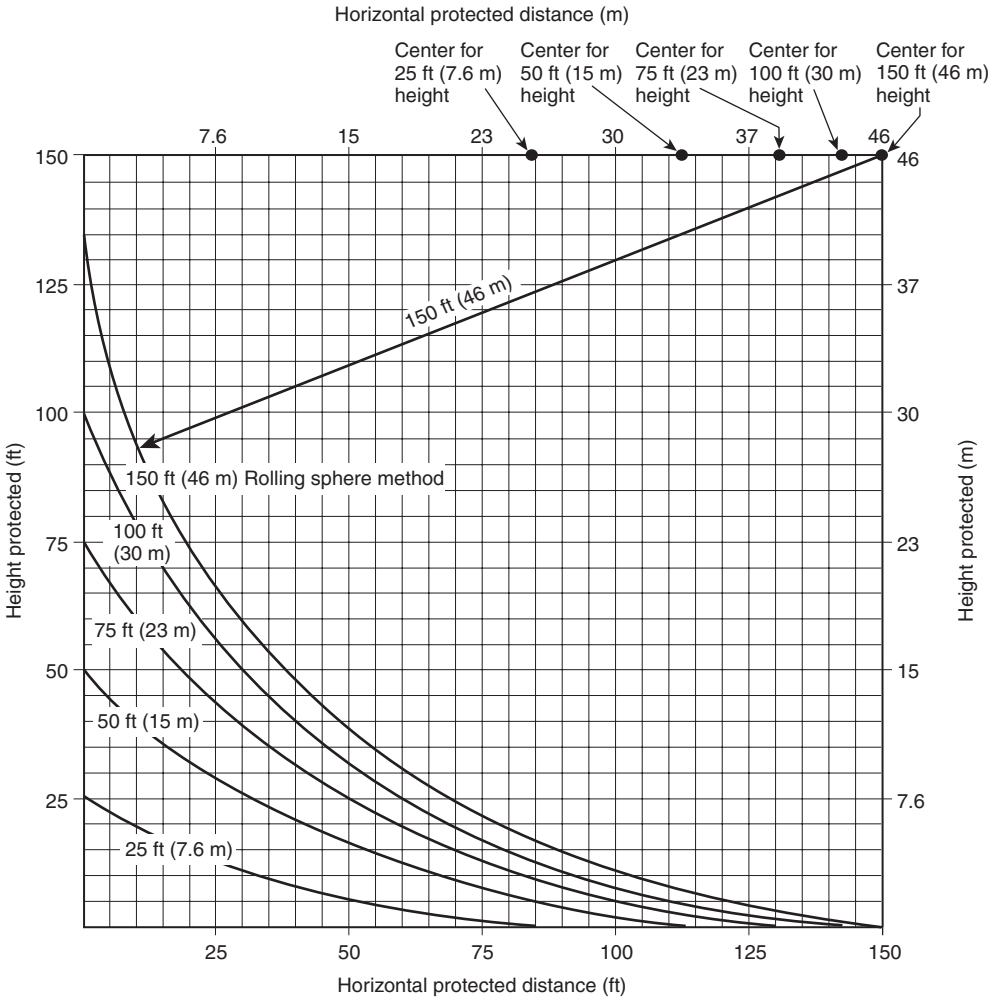


**FIGURE A.4.8.3.1 Zone of Protection Utilizing Rolling Sphere Method.**

**A.4.8.3.2** It is recognized that the sides of tall structures are subject to direct lightning strikes. Due to the low risk of strikes to the sides of tall structures and the minimal damage caused by these typically low current–level discharges, the cost of protection for the sides of tall structures normally is not justified.

**A.4.13.1.6** Consideration of the corrosive environment is necessary in the selection of an appropriate stainless steel alloy as a material.

**A.4.13.2** Research has been presented that warns that stainless steel is very susceptible to corrosion in many soil conditions. Extreme caution should be used with proper soil analysis where this type of rod is used. For further information, see *NFPA 70, National Electrical Code*, which contains detailed information on the grounding of electrical systems.

**A.4.13.2.4** Minimal benefit is gained from the second ground rod if placed closer than the sum of the driven depth of both rods.

**A.4.13.5** Augmentation of the grounding system specified in 4.13.5 and 4.13.8.2 by the use of one or more radial conductors is recommended. Radial conductors should be sized in accordance with the requirements for main conductors and installed in accordance with 4.13.8.1.

**A.4.13.6** The 2 $ft^2$ (0.18 $m^2$) surface area requirement can be accomplished by using a 1 $ft^2$ (0.09 $m^2$) plate with both sides in contact with the earth.

**A.4.13.8.1** For those instances in which it is necessary to install the grounding conductor directly on bedrock, it is recommended that main conductor solid strips be utilized. If there are locations along the length of the radial conductor in which there is sufficient soil available for the installation of an earth electrode, the installation of an additional earth electrode is encouraged. When a ground ring electrode is used in an application with insufficient soil cover, radial(s) should be considered to supplement the ground ring electrode to direct the lightning away from the protected area for all locations where property boundaries allow their addition.

**A.4.13.8.1.2** For applications involving shallow or no topsoil, the overall earth resistivity could be high, leading to a correspondingly high grounding system resistance. In such applications, the use of radials extending from the structure is encouraged. Where high earth resistivity is encountered, a greater radial length than that specified in 4.13.5 is recommended. It is also recommended that the length of radials used in these applications meet the criteria for Type II lightning protection systems (as defined in IEC 62305-3,

Copyright 2014 National Fire Protection Association (NFPA). Licensed, by agreement, for individual use and download on October 4, 2014 to LEADER and READER for designated user PATTARAPORN SRITRAKOOL. No other reproduction or transmission in any form permitted without written permission of NFPA. For inquires or to report unauthorized use, contact licensing@nfpa.org.



*Protection Against Lightning—Part 3: Physical Damage to Structures and Life Hazard*) as shown in Figure A.4.13.8.1.2.

**A.4.14.2** For structures 60 ft (18 m) or less in height, a loop conductor should be provided for the interconnection of all grounding electrodes and other grounded media. Regardless of the building height, ground loop conductors should be installed underground in contact with earth. Ground-level potential equalization allows use of a ground ring electrode as a ground loop conductor. A ground ring electrode conforming to 4.13.4 can be utilized for the ground loop conductor.

**A.4.14.3** Definitions in *NFPA 70, National Electrical Code (NEC)*, and in this standard for *bonded (bonding)*, *grounded*, *grounding*, and *grounding electrode* are similar. The actual sections in the *NEC* and in this standard that define what constitutes these various items point to differences in application, equipment, and requirements.

Section 250.50 of the *NEC* requires that all electrodes present at each building or structure be bonded together to form the grounding electrode system, which coordinates with the requirements of Section 4.14. The differences occur in Section 250.52 of the *NEC*, which describes grounding electrode devices not shown in Section 4.13. Grounding electrode devices described in Section 250.52 of the *NEC* but not referenced in this document include the following:

(1) 250.52(A)(1): 10 ft of metallic underground water pipe extending from the structure in contact with earth.
(2) 250.52(A)(2)(1): The metal frame of the structure in contact with earth.
(3) 250.52(A)(3)(2): The concrete-encased electrode described as #4 AWG would need to be a main-size conductor per 4.13.3.2.
(4) 250.52(A)(4): The ground ring electrode not smaller than 2 AWG is acceptable for Class I but would not be acceptable for Class II *(see Table 4.1.1.1.2)*.
(5) 250.52(A)(5): Pipe electrodes described in item (a) are not included. Rod electrodes described in item (b) as zinc-coated steel are not covered (4.13.2.5).
(6) 250.52(A)(6): Other listed electrodes would need to comply with the various sections of Section 4.13.
(7) 250.52(A)(7): Plate electrodes would need to comply with 4.13.6.
(8) 250.52(A)(8): "Other local metal underground systems or structures" are not referenced as grounding electrodes in this standard.

The lightning protection system designer must be familiar with these differences to be able to coordinate interconnection with other building grounding electrodes or the structural grounding electrode system as required by 4.14.3.

Where separate but adjacent buildings or facilities are interconnected directly (not through a utility) by electric, CATV, CCTV, data, or communications wiring, the grounding systems of those buildings should be directly interconnected to each other with a main-size conductor. The need for this interconnection can be eliminated by the use of fiber optic cable, shielded wire, wire run in grounded metallic conduit, or redundant surge protection (SPDs installed at the entrance(s) and exit(s) of both buildings or facilities).

**A.4.14.5** Section 250.68 of the *NEC* identifies locations where separately derived systems and associated bonding jumpers might be located for common grounding or bonding. Section 250.104 of the *NEC* details the interconnection of metallic piping, the structural frame, and all separately derived grounding systems. Subsection 4.14.5 requires one connection to other building grounded systems.

Much like a ground bus bar, the common grounding point for the lightning protection system to other building grounded systems could be distinguishable as located in the first 5 ft (1.52 m) of water pipe, but it could include the entire water pipe system. A common connection point on the structural metallic frame could be apparent, or it could be the extent of the building framework. There is no qualifier (size of pipe or structural metal) in the *NEC*, which is different from this standard. NFPA 780 qualifies the structural metallic frame as a current-carrying part of the system if it meets or exceeds the 3/16 in. (4.8 mm) thickness requirement *(see 4.19.1)*.

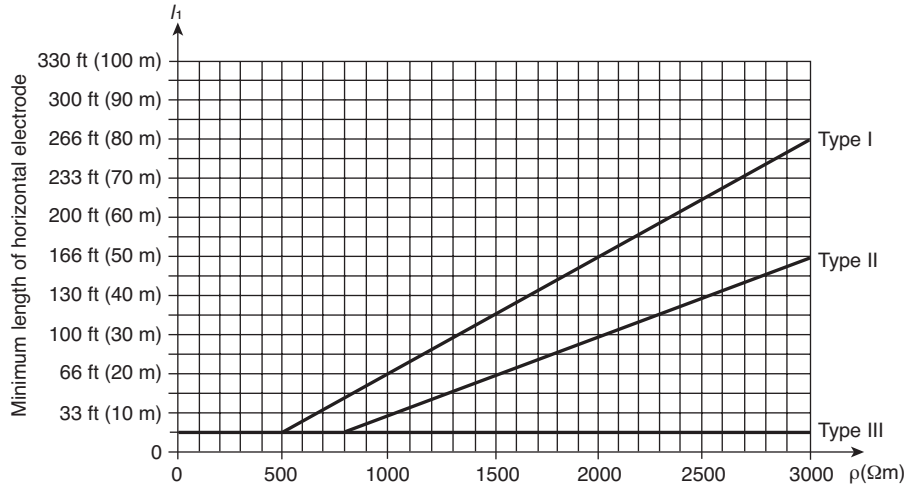


Note: Minimum length of horizontal electrode denotes the combined total length of all conductors that each electrode comprises.

**FIGURE A.4.13.8.1.2 Minimum Length of Each Grounding Electrode Based on Earth Resistivity. (Source: IEC 62305-3, Edition 2, Figure 3.)**

Copyright 2014 National Fire Protection Association (NFPA). Licensed, by agreement, for individual use and download on October 4, 2014 to LEADER and READER for designated user PATTARAPORN SRITRAKOOL. No other reproduction or transmission in any form permitted without written permission of NFPA. For inquires or to report unauthorized use, contact licensing@nfpa.org.



Where installation of the electrical grounding system is made in full compliance with the *NEC*, it would be necessary to connect to the lightning protection ground system only once to comply with 4.14.5. The location must be identified by the method used in the *NEC*. In cases where the building structural metallic frame is a part of the lightning protection system or is bonded as required by 4.9.13, it would generally be expected that no additional bonding runs at grade level between systems would be required.

The lightning protection system designer could consider simplification of the system interconnection requirement by specifying one connection to the metallic water pipe system, but in certain cases the use of plastic pipe sections makes this not a part of the building grounding system. In other instances, the building structural frame cannot be exposed for connection of derived systems, so this could not be the method for interconnection of grounded systems, or there might be no metallic frame. The designer could also specify connection of the lightning protection ground system to the electrical grounding electrode, but in the case of buildings served by feeders of branch circuits [250.104 (A)(3)], there is no grounding electrode.

Knowledge of the requirements or acceptable allowances in the *NEC* is necessary to determine common bonding of the lightning protection system to other building grounded systems at a single point. If the installed building grounded systems are not in compliance with current *NEC* requirements, common ground bonding must include the interconnection of all building-grounded systems to the lightning protection grounding system. If there is no problem with multiple bonds between various systems or loops, then multiple connections from the lightning protection system will simply improve the overall grounding system quality for the structure.

**A.4.14.6(7)** There could be installations where multiple sections of piping and associated junctions exist between the gas meter/regulator and the entrance of the line to the structure. Such junctions can create increased impedances at frequencies that are associated with overvoltages. Where there is internal piping that could be susceptible to overvoltages, care should be taken to ensure that the interconnection of the lightning protection grounding system is made to pipe sections that will not increase the impedance between the pipe and the grounding section. This could be accomplished by connection to the last section of the pipe entering the structure. This interconnection could be made either external or internal to the structure.

**A.4.14.6(8)** Isolating spark gaps can be used to provide the required bond in those cases where galvanic corrosion is a concern or where a direct bond is not allowed by local code. The use of isolating spark gaps is not recommended for those applications where significant follow current can be expected. It is recommended that isolating spark gaps used in this application be installed in accordance with the manufacturer's instructions and be rated for the environment in which they are to be installed (hazardous classified location, direct burial, etc., as applicable). The devices used in the applications should be rated at a maximum discharge current no less than 100 kA, 8/20 µs [2.5 kV spark overvoltage ($U_p$)], have an isolating resistance no less than $10^8$ ohms, and have a maximum dc spark overvoltage of 500 V.

**A.4.15.2** In the case of flat or gently sloping roofs, the roof conductors required by 4.9.7 can be used for achieving roof-level potential equalization. In the case of pitched roofs, the interconnection should be a loop placed at the eave level.

**A.4.16** See Annex C for a technical discussion of lightning protection potential-equalization bonding.

In addition to the bonding of metal bodies, surge suppression should be provided to protect power, communication, and data lines from dangerous overvoltages and sparks caused by lightning strikes.

**A.4.16.3** An isolated metallic body, such as a metal window frame in a nonconducting medium, that is located close to a lightning conductor and to a grounded metal body will influence bonding requirements only if the total of the isolated distances between the lightning conductor and the isolated metal body and between the isolated metal body and the grounded metal body is equal to or less than the calculated bonding distance.

**A.4.18.4.1** It is preferable that grounding electrodes be located no closer than 0.6 m (2 ft) from foundation walls to minimize the probability of damage to the foundation, although this is not always practicable for all applications. For reference, IEC 62305-3, *Protection Against Lightning*, requires that ring earth electrodes be buried at a depth of at least 0.5 m (18 in.) and a distance of approximately 1 m (3 ft) around external walls.

**A.4.19.3.5** Protecting the base metal with a conductive, corrosion-inhibiting coating, coating the entire bond with a corrosion-inhibiting coating, or other equivalent methods can be utilized.

**A.4.20.1** Surge protection alone is not intended to prevent or limit physical damage from a direct lightning strike to a facility or structure. Rather, it is intended to defend against indirect lightning effects imposed upon the electrical services to a structure as part of a coordinated lightning protection system installed in accordance with the requirements of this standard.

Surge currents and their corresponding overvoltage transients can be coupled onto electrical utility feeders in a number of ways. These mechanisms include magnetic or capacitive coupling of a nearby strike or the more dramatic but much less frequent conductive coupling of a direct cloud-to-ground discharge. These overvoltage transients pose a significant threat to modern electrical and electronic equipment.

**A.4.20.2** An SPD responds to surges by lowering its internal impedance so as to divert surge current to limit the voltage to its protective level — the measured limiting voltage. After the occurrence of surges, the SPD recovers to a high-impedance-state line-to-ground and extinguishes current-to-ground through the device when line voltage returns to normal. The SPD achieves these functions under normal service conditions, which are specified by the frequency of the system, voltage, load current, altitude (i.e., air pressure), humidity, and ambient air temperature.

**A.4.20.2.2** Antennas are considered a part of conductive signal, data, and communication services.

**A.4.20.2.4** SPDs should be considered on branch distribution panels 100 ft (30 m) or more from the primary service entrance panel where the electrical equipment fed by the panel is susceptible to overvoltages and determined to be mission critical or critical to life safety. Inductive coupling of electrical and magnetic fields can result in surges sufficient to cause damage to susceptible electrical equipment. Permanent failure of electrical and electronic systems due

Copyright 2014 National Fire Protection Association (NFPA). Licensed, by agreement, for individual use and download on October 4, 2014 to LEADER and READER for designated user PATTARAPORN SRITRAKOOL. No other reproduction or transmission in any form permitted without written permission of NFPA. For inquires or to report unauthorized use, contact licensing@nfpa.org.



to lightning electromagnetic pulse (LEMP) can be caused by conducted and induced surges transmitted to apparatus via connecting wiring as well as the effects of radiated electromagnetic fields impinging directly onto apparatus itself. Protection at primary panels and subpanels (coordinated SPD system) is a recommended technique to reduce those effects. IEC 62305-4, *Protection Against Lightning—Part 4: Electrical and Electronic Systems Within Structures*, suggest that the impedance resulting from 30 ft (10 m) of wiring from an SPD can be sufficient to allow overvoltages of magnitudes that can result in failure of susceptible electrical equipment. To reduce the probability of failure of mission-critical equipment or equipment that is critical to life safety, surge protection should be considered where the distance between the SPD at the service entrance exceeds 100 ft (30 m).

**A.4.20.2.5** Most services to facilities will require discrete surge suppression devices installed to protect against damaging surges. Occasionally, services will be located in an area or a manner where the threat from lightning-induced surges and overvoltage transients might be negligible. For example, the requirements in 4.20.2.3 *(also see A.4.20.6.1)* exempt services less than 100 ft (30 m) in length that are run in grounded metal conduit between buildings requiring surge protection. Other examples where SPDs might not be required to be installed at each service entrance are those applications where fiber optic transmission lines (with no conducting members) are used. The standard recognizes that there can be acceptable exceptions and consequently allows for such exceptions to the requirements for surge suppression on electrical utility, data, and other signal lines, provided a competent engineering authority has determined that the threat is negligible or that the system is protected in a manner equivalent to surge suppression.

Allowance in this standard for the exemption of surge suppression at specific locations is not intended as a means to provide a broad exemption simply because surge suppression might be considered inconvenient to install. Rather, this allowance recognizes that all possible circumstances and configurations, particularly those in specialized industries, cannot be covered by this standard.

Determinations made by an engineering authority for exempting installation of SPDs should focus on the likelihood of lightning activity in the region, the level of damage that might be incurred, and the potential loss of human life or essential services due to inadequate overvoltage protection.

Four methods of analysis are commonly used for this determination, although other equivalent analysis can be used. The four methods are the following:

(1) A *risk assessment* could be performed in accordance with IEC 62305-2, *Protection Against Lightning—Part 2:Risk Management*, and surge protection requirements could be waived if justified by the assessment.
(2) The *lightning flash density/risk analysis* is an analysis to determine the frequency of lightning activity in the geographic area of the facility. As a rule of thumb, if the flash density exceeds one flash per square kilometer per year, surge suppression or other physical protection should be considered. Lightning energy can indirectly couple to services at ranges greater than 0.6 mi (1 km) to create potentially damaging overvoltages.
(3) *Plant/facility statistical or maintenance records* can also be used for risk analysis. If these records can demonstrate the lack of damage on a service due to surges, they can be used to justify low risk of surge damage to a particular system or facility.
(4) The *lightning electromagnetic environment analysis* starts with a threat electromagnetic field from a nearby lightning strike and computes the magnitude and rise-time characteristics of transients coupled into services feeding a structure or facility. Based on the computed threat, SPDs can be sized appropriately or omitted, as warranted. This analysis is typically performed for critical communications facilities and in military applications. Electromagnetic environments for such an analysis can be found in MIL-STD-464C, *Interface Standard Electromagnetic Environmental Effects Requirements for Systems*, and IEC 62305-4, *Protection Against Lightning—Part 4: Electrical and Electronic Systems Within Structures*.

In all cases, the criticality of continued operation, potential life hazard to persons and essential services, and the consequence of facility damage or shutdown should be factors in the analysis. If a hazardous condition results from a surge causing temporary shutdown without permanent damage (e.g., through the disabling of a computer or communication system), then the requirements for surge suppression as articulated by Section 4.20 should not be exempted.

**A.4.20.3.1** SPDs are typically sized significantly larger than the expected challenge level. At service entries, it is generally agreed that a nominal discharge current ($I_n$) of 20 kA will provide adequate protection. However, larger ratings that protect against less probable but more powerful lightning events will usually provide a better capability to handle multiple strikes and will usually provide a longer service life.

Rating the SPD's $I_n$ higher than the minimums in this document is recommended in areas with frequent lightning.

Where installed, SPDs at branch panels or subpanels should have an $I_n$ rating of 10 kA 8/20 µs or greater per phase.

Where installed, supplementary protection (also called *point of utilization*) SPDs should have an $I_n$ rating of 5 kA 8/20 µs or greater per phase.

**A.4.20.4** The measured limiting voltages of the SPD should be selected to limit damage to the service or equipment protected.

Devices rated in accordance with the 3rd edition of ANSI/UL 1449, *Standard for Surge Protective Devices*, reflect that the voltage rating test in this edition utilizes a 3 kA peak current instead of the 500 A current level previously used in the SVR test of the 2nd edition of UL 1449, *Standard for Safety for Transient Voltage Surge Suppressors*.

**A.4.20.5** Surges can be induced upon any line entering a structure.

Where installed, branch panels over 100 ft (30 m) from the service entrance should have L–G or L–N and N–G modes of protection. Additionally, L–L protection is also permitted (although this is usually achieved by the L–N modes across two phases). L–L protection is achieved by the L–N modes across two phases.

The following modes of protection are possible to minimize voltage differences between the individual conductors:

(1) Line-to-line (L–L) protection places the SPD between the current-carrying conductors in a power system.
(2) Line-to-neutral (L–N) protection places the SPD between the current-carrying conductors and the grounded conductor (neutral) in a power system.
(3) Line-to-ground (L–G) protection places the SPD between the current-carrying conductors and the grounding conductor (ground) in a power system.

Copyright 2014 National Fire Protection Association (NFPA). Licensed, by agreement, for individual use and download on October 4, 2014 to LEADER and READER for designated user PATTARAPORN SRITRAKOOL. No other reproduction or transmission in any form permitted without written permission of NFPA. For inquires or to report unauthorized use, contact licensing@nfpa.org.



(4) Neutral-to-ground (N–G) protection places an SPD between the grounded conductor (neutral) and the grounding conductor (ground) in a power system. This mode of protection is not required at the service entrance (primary service panel board) if the neutral-to-ground bond is implemented at this location or within proximity of this point of installation. Thus, in general, an SPD with only L–L and L–N modes of protection might be required at the service entrance.
(5) *Common mode* is a term used for a mode of protecting telecommunications, data lines, and so forth. This mode places the SPD between the signal conductor and ground. It is analogous to L–G mode in power systems.
(6) *Differential mode* is a term used for a mode of protecting telecommunications, data lines, and so forth. In this mode, an SPD is placed between the individual signal lines, analogous to the L–L mode of protection in power systems.

**A.4.20.6.1** SPDs should be placed on both ends of external signal, data, and communication lines longer than 100 ft (30 m) that connect pieces of equipment or facilities, to protect against surges coupled into the wiring or caused by ground potential differences.

**A.4.20.6.4.1** The purpose of the SPD is to equalize L–L, L–N, L–G, and N–G potentials. While a good ground is important, a good bond is imperative to minimize damage due to lightning and power contact or induction.

**A.4.20.6.4.4** Differential mode protection should also be provided where practicable.

**A.4.20.7.2** Longer, or looped, SPD line and ground conductors increase the impedance of the SPD ground circuit. Increasing the lead length serves to increase pass-through voltage at the point where the SPD is wired into service equipment or a branch panelboard. Consequently, it is essential to minimize lead length impedance in this circuit.

**A.4.20.7.4** Some SPD units are provided with a failure indicator. This feature is recommended because it facilitates maintenance or test procedures. Where used, this indicator should be visible. Building maintenance should consider periodic inspection or testing of SPDs. *(See* NFPA 70B, *Recommended Practice for Electrical Equipment Maintenance.)*

**A.4.20.8** The effectiveness of the SPD is based on the impedance of the path to ground. A lower ground resistance minimizes voltage differences of conductors attached to SPDs near the service entrance and reduces the chance of arcing or insulation breach. Consequently, it is essential to minimize impedance in this circuit.

**A.5.8.1** The metal thickness could be less than the dimensions required in Chapter 4. On a nonmetal helipad, a flat metal plate should be permitted to serve as a strike termination device in the landing area if the landing area exceeds 50 ft (15 m) in both dimensions. The minimum exposed area of the plate should be 3 $in.^2$ (1950 $mm^2$). The minimum thickness of the plate should be $\frac{3}{16}$ in. (4.8 mm). The plate should be installed flush with the helipad surface and exposed to the air. The plate should be connected to the roof lightning protection system with a two-way horizontal or downward path. Conductors connecting the plate to the lightning protection system should be installed flush with or below the helipad surface. Refer to 4.18.3.2 for the bonding requirements.

**A.5.8.6** The connection does not provide lightning protection for the parked aircraft. Consideration should be given to relocate the helicopter to a safer location.

**A.6.9** A ground grid located within 50 ft (15 m) of the foundation of a stack and constructed of wires meeting the requirements of this standard for main conductors is a permitted grounding electrode. If the stack is located within 50 ft (15 m) of the grid in all directions, the grid can also serve as the bottom loop conductor required by 6.4.2.

**A.7.1.1** In the structures covered in Chapter 7, a spark that would otherwise cause little or no damage might ignite the flammable contents and result in a fire or explosion.

Flammable vapors can emanate from a flammable liquid [flash point below 100°F (37.8°C)] or a combustible liquid [flash point at or above 100°F (37.8°C)] when the temperature of the liquid is at or above its flash point. Chapter 7 applies to these liquids when they are stored at atmospheric pressure and ambient temperature. Provided that the temperature of the liquid remains below the flash point, combustible liquids stored under these conditions will not normally release significant vapors since their flash point is defined to be at or above 100°F (37.8°C).

Metallic tanks, vessels, and process equipment that contain flammable or combustible liquids or flammable gases under pressure normally do not require lightning protection since this equipment is well shielded from lightning strikes. Equipment of this type is normally well grounded and is thick enough not to be punctured by a direct strike.

This chapter applies to flammable or combustible liquids such as gasoline, diesel, jet fuel, fuel oil, or crude oil stored at atmospheric pressure. It does not apply to liquids or gases stored under pressure, such as liquefied natural gases or liquefied petroleum gases.

**A.7.1.3** Chapters 4, 5, and 6 of this standard give requirements for the protection of buildings and miscellaneous property against lightning damage.

**A.7.3.2.4** The striking distance is related to the peak stroke current and thus to the severity of the lightning stroke; the greater the severity of the stroke, the greater the striking distance. In the vast majority of cases, the striking distance exceeds 100 ft (30 m).

**A.7.4.1.1** For fixed roof tanks (metallic cone or dome) and internal floating roof tanks, there is a possibility of flammable vapors being present at atmospheric vents. If present, flammable vapors can be ignited by a lightning flash. Bonding techniques to prevent discharge between the floating roof and the shell are addressed in API 650, *Welded Steel Tanks for Oil Storage*, Appendix H.

Tanks handling low vapor pressure materials or in-service tanks with properly maintained floating roofs with tight-fitting seals are not likely to have flammable vapors at atmospheric vents unless they are being refilled from empty. In these cases, no further lightning protection is required.

**A.7.4.1.2** Refer to API RP 545, *Recommended Practice for Lightning Protection of Aboveground Storage Tanks for Flammable or Combustible Liquids*. Shunts are used for conduction of fast and intermediate duration components of lightning-stroke current.

**A.7.4.1.2.2.5** API RP 545, *Recommended Practice for Lightning Protection of Aboveground Storage Tanks for Flammable or Combustible Liquids*, recommends a minimum service life of 30 years.

**A.7.4.1.3** Bypass conductors are used for conduction of the intermediate and long-duration component of lightning-stroke current.

Copyright 2014 National Fire Protection Association (NFPA). Licensed, by agreement, for individual use and download on October 4, 2014 to LEADER and READER for designated user PATTARAPORN SRITRAKOOL. No other reproduction or transmission in any form permitted without written permission of NFPA. For inquires or to report unauthorized use, contact licensing@nfpa.org.



**A.7.4.1.3.5** API RP 545, *Recommended Practice for Lightning Protection of Aboveground Storage Tanks for Flammable or Combustible Liquids*, recommends a minimum service life of 30 years.

**A.8.1.1** The risk assessment process found in Annex L can be used for facilities, provided that it is adequately documented.

**A.8.1.3(1)** Data by López and Holle, "Lightning Casualties and Damages in the United States from 1959 to 1994," suggest that a minimum warning distance of at least 6 mi to 8 mi (9.6 km to 12.8 km) is required to ensure that there is no significant damage from a lightning strike.

**A.8.1.3(3)** Annex L provides guidance for performing a facility risk assessment.

**A.8.3.1** The best method to protect extremely sensitive operations from all sources of electromagnetic radiation is to enclose the operations or facility inside a metallic, "Faraday-like" cage. A metallic, Faraday-like cage is an enclosure that comprises a continuous grid of conductors, such that the voltage between any two points inside the enclosure is zero when the cage is immersed in an electrostatic field. A metallic cage or Faraday shield lightning protection system is one in which the protected volume is enclosed by a heavy metal screen (i.e., similar to a birdcage) or continuous metallic structure with all metallic penetrations bonded. The lightning current flows on the exterior of the structure, not through the interior. A Faraday-like shield, which is not an ideal Faraday cage, is formed by a continuous conductive matrix that is properly bonded and grounded.

A freestanding structure that is determined by the AHJ to be a metallic cage or Faraday-like shield might not require either grounding systems or strike termination devices. Use of a strike termination system on these structures provides a preferred attachment point for lightning and could prevent structural damage, such as concrete spall, from direct lightning attachment.

The intent of this type of structure is to prevent the penetration of lightning current and related electromagnetic field into the object to be protected and prevent dangerous thermal and electrodynamic effects of current as well as dangerous sparking and overvoltages for electrical and electronic systems. Effective lightning protection is similarly provided by metallic structures such as those formed by the steel arch or the reinforcing steel in the walls and floors of earth-covered magazines (also referred to as bunkers, huts, or igloos) if the steel reinforcement is bonded together and it meets the bonding resistance of 8.10.7.1.

**A.8.3.2.1** The isolation of the down conductors from the structure will reduce the magnetic field strength in the structure and the probability of a sideflash from a down conductor.

**A.8.3.4** The spacing dimensions of strike termination devices based upon the 100 ft (30 m) rolling sphere method (RSM), with terminals 12 in. (0.3 m) tall, are 25 ft (7.6 m) at the center of the roof, 20 ft (6.1 m) at the roof perimeter, and 2 ft (0.6 m) set back from the outer end of roof ridges. For terminals 24 in. (0.6 m) tall, the dimensions increase to 35 ft (12 m) at the center of the roof, 20 ft (6.1 m) at the roof perimeter, and 24 in. (0.6 m) set back from the outer end of roof ridges.

**A.8.7.2** The purpose of the lightning protection system on the piers or wharves is to protect the explosives positioned on these structures from being ignited by direct lightning strikes. A ship alongside a pier or wharf is capable of providing a zone of protection for a section of the pier or wharf. The portion of the pier or wharf used for explosives staging will require lightning protection from a mast or catenary system.

**A.8.7.5** ISO containers are sometimes used for temporary storage of various explosives materials, such as small arms in ammo boxes, various weapons system configurations in shipping containers, commercial explosives, fireworks, and so forth. Because the metal frame of a properly maintained ISO container does not meet the metal thickness requirement for strike termination devices, there could be burn-through for some strikes. The metal frame will provide some shielding from lightning electromagnetic effects, and the surface area contact of the superstructure on the local earth will provide some impedance to earth. These provide protection against the effects of lightning for some configurations and sensitivity of contents, but not all. In some cases, it might be necessary to provide strike termination devices, additional bonding, and grounding of the ISO container. Whether the ISO container is to be supplemented by lightning protection is a decision for the AHJ to make, based on a risk assessment of the sensitivity of the container's contents.

**A.8.9** The effectiveness of any lightning protection system depends on its installation, its maintenance, and the testing methods used. Therefore, all installed lightning protection systems should be properly maintained. Proper records of maintenance and inspections should be maintained on each facility to ensure adequate safety. These records are part of the lightning protection requirements and should be maintained.

**A.8.10.7** The instrument used in earth resistance testing should be capable of measuring 0 ohms to 50 ohms, ±10 percent. The instrument used to measure bonding resistance should be capable of measuring 0 ohms to 10 ohms, ±10 percent.

**A.8.10.7.7** For methods to verify the operation of the SPD, see NFPA 70B, *Recommended Practice for Electrical Equipment Maintenance*.

**A.8.10.7.9** Assistance in determining a qualified person can be found in *NFPA 70E, Standard for Electrical Safety in the Workplace*.

**A.9.1** Modern turbine blades are typically constructed of composite materials such as carbon or glass-reinforced plastic. Some parts and discrete components such as mounting flanges, balancing weights, hinges, bearings, wires, electrical wiring, and springs are made of metal. Lightning strikes blades that have metallic and nonmetallic components. The technical challenge in designing lightning protection of wind turbine blades is to conduct the lightning current safely from the strike attachment point to the hub in such a way that the formation of a lightning arc inside the blade is avoided. This can be achieved by diverting the lightning current from the strike attachment point along the surface to the blade root, using metallic conductors either fixed to the blade surface or inside the blade.

Typically for blades up to 60 ft (18 m) long, receptors at the tip of the blade are adequate. However, it might be necessary for longer blades to have more than one receptor to obtain the desired interception efficiency. Protection of the blades is provided by the blade manufacturer and is typically an integral part of the blade.

Any wiring for sensors placed on or inside blades should be protected via bonding to the down conduction system. Wiring should be either shielded cables or placed in metal tubes. The cable shield or metal tube should be placed as close as possible to the down conductor and bonded to it.

**A.9.1.2** This protection is addressed by specific manufacturer product approval standards.

**A.9.4.1** Consideration should be given to design requirements for power generation facility grounding, including sizing of conductors for fault currents and requirements for touch and step potential.

Copyright 2014 National Fire Protection Association (NFPA). Licensed, by agreement, for individual use and download on October 4, 2014 to LEADER and READER for designated user PATTARAPORN SRITRAKOOL. No other reproduction or transmission in any form permitted without written permission of NFPA. For inquires or to report unauthorized use, contact licensing@nfpa.org.



**A.9.4.2** Additional vertical or horizontal ground ring electrodes could be used in combination with the ring electrode.

**A.10.1.2** A lightning protection system does not afford protection if any part of the watercraft contacts a power line or other voltage source while in water or on shore. A lightning protection system lowers but does not eliminate risk to watercraft and its occupants.

**A.10.2.2.4** Carbon fiber fittings, including masts, should be isolated electrically from the lightning conductor system. Since carbon fiber is a conductor, sideflash risk is increased in the vicinity of carbon fiber composite (CFC) structures, especially near the water. The use of CFC reinforcement in areas such as chainplates is to be avoided.

**A.10.3.1** The techniques described in Chapter 10 should also be applied to watercraft for the placement of strike termination devices and determining the zone of protection.

**A.10.3.2.1** Where a standing person is not covered by the zone of protection, a warning to this effect should be included in the owner's manual.

For retrofit applications and those applications where a sufficient zone of protection cannot be provided, the zone of protection of the lightning protection system should be identified and provided to the user of the watercraft.

**A.10.4.1.1** See Table 9.12.5(a) of NFPA 302, *Fire Protection Standard for Pleasure and Commercial Motor Craft*, for minimum strand sizes for watercraft conductors. Main conductors of greater cross-sectional area as discussed in Section 4.9 provide a greater degree of safety.

**A.10.4.1.3** If a metal with the area given by the equations in 10.4.1.3 is subject to the lightning heating (action integral) required to raise the temperature of a copper conductor with 0.033 in.$^2$ (21 mm$^2$) from a nominal temperature of 77°F (298 K) to the melting point of copper, then its temperature would be raised to the melting point of the metal. Values for silicon bronze and stainless steel are given in Table A.10.4.1.3(a) or Table A.10.4.1.3(b).

**Table A.10.4.1.3(a) Areas for Main Conductor Not Containing Electrical Wiring (inch-pound units)**

| Metal | $C_p$ (BTU/lb$_m$ °F) | $D$ (lb$_m$/in.$^2$) | ρ (Ω in.) | $MP$ (°F) | Area (in.$^2$) |
|---|---|---|---|---|---|
| Silicon bronze | 0.086 | 0.32 | $9.95 \times 10^{-6}$ | 1981 | 0.13 |
| Stainless steel | 0.122 | 0.29 | $3.74 \times 10^{-5}$ | 2781 | 0.19 |

**Table A.10.4.1.3(b) Areas for Main Conductor Not Containing Electrical Wiring (metric units)**

| Metal | $C_p$ (J kg$^{-1}$ K$^{-1}$) | $D$ (kg m$^{-3}$) | ρ (Ω m) | $MP$ (K) | Area (mm$^2$) |
|---|---|---|---|---|---|
| Silicon bronze | 360 | 8800 | $2.55 \times 10^{-7}$ | 1356 | 85 |
| Stainless steel | 510 | 7930 | $9.6 \times 10^{-7}$ | 1800 | 125 |

**A.10.4.1.4** The area of a conductor of uniform cross-section that has the same resistance as a copper conductor of area $A_{Cu}$ is given by the following equation:

$$A = \frac{\rho}{\rho_{Cu}} A_{Cu}$$

where:
$A$ = cross-sectional area
ρ = resistivity of alternative metal (Ω m)
$\rho_{Cu}$ = resistivity of copper ($1.7 \times 10^{-8}$ Ω m)
$A_{Cu}$ = 21 mm$^2$ for a main conductor

Using the parameters in Table A.10.4.1.3(a) and Table A.10.4.1.3(b), the areas are 0.49 in.$^2$ (315 mm$^2$ ) for silicon bronze and 1.8 in.$^2$ (1200 mm$^2$) for stainless steel.

**A.10.4.1.6** Routing lightning conductors near the outer surface of the hull lowers the risk of internal sideflashes forming between the lightning conductors and other conducting fittings and of external sideflashes forming between conducting fittings and the water. Routing lightning conductors externally is also more consistent with the layout recommended for buildings wherein air terminals, down conductors, and grounding electrodes are located on the outside of the building. However, in the case of internal conducting fittings being very close to the water, such as a keel-stepped mast, a grounding electrode should be provided as close as is practicable to the portion of the fitting that is closest to the water.

**A.10.4.1.7** All lightning conductors should be routed as far as possible from the water, and especially the waterline, to minimize the risk of an external sideflash forming between the lightning conductor and the water. Similarly, conducting fittings, electronic equipment, and electrical wiring should be located as far as possible from the water.

**A.10.4.2.3** Using the parameters in Table A.10.4.1.3(a) and Table A.10.4.1.3(b), the required areas are 0.052 in.$^2$ (33 mm$^2$) for silicon bronze and 0.075 in.$^2$ (48 mm$^2$) for stainless steel.

**A.10.4.2.4** Using the same equation as in A.10.4.1.4, with 0.013 in.$^2$ ($A_{Cu}$ = 8.3 mm$^2$) as the area for a copper bonding conductor, the required areas are 0.19 in.$^2$ (125 mm$^2$) for silicon bronze and 0.73 in.$^2$ (470 mm$^2$) for stainless steel.

**A.10.4.2.7** Large metallic masses include metal cabinets that enclose electronic equipment, tanks, handrails, lifeline stanchions, engines, generators, steering cables, steering wheels or tillers, engine controls, metallic arches, and bow and stern pulpits.

**A.10.4.4.1** A main conductor is designed to conduct an appreciable fraction of the lightning current, typically in a vertical direction. Close to the water, and especially inside the hull below the waterline, the optimum direction for a main conductor is perpendicular to the hull directly inboard of the grounding electrode in contact with the water. A bonding conductor is intended to conduct the relatively small currents required to equalize potentials between conducting fittings and the lightning protection system. The optimum orientation for bonding conductors is parallel to the water surface and the best location is as far from the water surface as is practicable.

**A.10.4.6.2** The area of a conductor of uniform cross-section that has the same resistance per unit length as a main conductor is given by the equation in A.10.4.1.4. For connecting a

Copyright 2014 National Fire Protection Association (NFPA). Licensed, by agreement, for individual use and download on October 4, 2014 to LEADER and READER for designated user PATTARAPORN SRITRAKOOL. No other reproduction or transmission in any form permitted without written permission of NFPA. For inquires or to report unauthorized use, contact licensing@nfpa.org.



main conductor, the areas are 0.49 in.$^2$ (315 mm$^2$) for silicon bronze and 1.8 in.$^2$ (1200 mm$^2$) for stainless steel. For connecting a bonding conductor, the required areas are 0.19 in.$^2$ (125 mm$^2$) for silicon bronze and 0.73 in.$^2$ (470 mm$^2$) for stainless steel.

Equating resistances for a copper conductor of area $A_{Cu}$, resistivity $\rho_{Cu}$, and length $L_{Cu}$ and a metal connector of area $A$, resistivity $\rho$, and length $L$ gives a maximum allowable length for the metal connector as follows:

$$L = L_{Cu} \frac{A}{A_{Cu}} \frac{\rho_{Cu}}{\rho}$$

where:

$L$ = length of metal connector
$L_{Cu}$ = length of copper conductor
$A$ = area of metal connector
$A_{Cu}$ = area of copper conductor
$\rho_{Cu}$ = resistivity of copper conductor
$\rho$ = resistivity of metal connector

The length is the same for both main and bonding conductors and is 6.5 in. (165 mm) for silicon bronze and 2.5 in. (63.5 mm) for stainless steel when $L_{Cu}$ = 2 ft (0.6 m).

**A.10.5.2.1** In order to allow for main conductors to be routed externally to vulnerable areas (as described in 10.4.1.6) and to reduce the risk of external sideflashes from the lightning conductors, grounding electrodes should be located as close to the waterline as is practicable. Where an onboard fitting is below the waterline and close to the water, an additional supplemental grounding electrode is advisable in the vicinity of the fitting.

**A.10.5.2.3** Seacocks are particularly susceptible to damage and leaking after a strike and should be inspected after all suspected strikes.

**A.10.5.4.1** A supplemental grounding electrode can be painted or covered with a thin coating [<0.04 in. (<1 mm)] but should not be encapsulated in fiberglass.

**A.10.5.5** An air gap or SPD (such as a gas discharge tube) might be desirable to reduce corrosion in the presence of leakage currents in the water and could reduce galvanic corrosion. However, using an air gap to isolate an immersed conductor from the water can increase the risk of a ground fault current bypassing any ground fault protection device. Hence, a hazardous current can be inadvertently introduced into the water. For this reason, measures should be taken to ensure that loose electrical connections cannot contact any part of the isolated grounding electrode. A spark gap should not be used where there is the possibility of ignitible vapors or personal hazards.

**A.11.1.1** Chapter 11 pertains to lightning protection of airfield lighting systems. These systems are installed underground in both paved (full strength pavement and shoulder pavement) and unpaved areas. The protected components include in-pavement fixtures, elevated fixtures, airfield signs, underground power, communications systems, control and signal circuits, and components of runway, taxiway, and apron lighting systems. These systems are installed on the portions of an airport that encompass the approach, departure, landing, takeoff, taxiing, and parking areas for aircraft and include runways, taxiways, and other parts of an airport used for taxiing, takeoff, and landing of aircraft, loading ramps, and parking areas exclusive of building-mounted helipads, approach light structures, and antennas. This chapter could also apply to other areas with airfield lighting systems.

There are two generally accepted methods for providing lightning protection for airfield lighting circuits: isolation and equipotential. The isolation method, which is described in 11.4.2.6, is shown in Figure A.11.1.1(a). The equipotential method, which is described in 11.4.2.7, is shown in Figure A.11.1.1(b). The two methods should not be employed on a single circuit. The designer should select the installation method based upon sound engineering practices and the success of the selected method in previous installations.

**A.11.1.2** Aboveground items such as approach light masts can be protected in accordance with Chapter 4.

**A.11.2.1** A typical airfield lighting series (current-driven) circuit is powered by a constant current regulator (CCR) or equivalent power supply. Current is the same at all points in the series circuit. The output voltage is directly proportional to the load and output current step. The CCR output (primary circuit) is normally ungrounded. The internal overcurrent protection of the CCR or an equivalent power supply monitors the actual output current. Series airfield lighting circuit overcurrent protection does not rely on a low impedance return path or ground connection for proper operation.

The installation of an equipotential airfield lighting counterpoise system on a series circuit also provides equipotential bonding between all elements of the airfield lighting system. The airfield lighting counterpoise system maintains all interconnected components at earth potential and protects personnel from possible contact with energized metallic light bases, mounting stakes, or fixtures.

Lightning strikes often occur on the pavement, and the counterpoise conductor provides a method of dissipating the energy as it moves from the pavement surface to the earth.

**A.11.2.2** The parallel (voltage-powered) circuit is similar to the typical alternating current system used in homes and in industry. Voltage is nominally the same at all points in the parallel circuit. The parallel circuit current varies according to the load.

Parallel circuits must be installed in accordance with *NFPA 70*, *National Electrical Code*. The required equipment grounding conductor must be sized in accordance with Article 250 of *NFPA 70*. Equipment grounding conductors for parallel circuits should be routed within the same raceway or cable with the parallel circuit conductors or in close proximity to direct buried conductors and cables to reduce the overall circuit impedance, allowing expedited operation of the overcurrent device.

The equipment grounding conductor must be bonded to each metallic airfield lighting component and the airfield lighting vault building ground system in accordance with *NFPA 70*. All metallic airfield lighting components must be bonded to the equipment grounding conductor.

The lightning protection system for a parallel (voltage-powered) airfield lighting circuit should be installed in the same manner as a lightning protection system for a series (current-driven) airfield lighting circuit.

**A.11.2.5** A lightning protection system for airfield lighting circuits could still be required for the conditions described in 11.2.5 to comply with funding agency requirements. The AHJ could also require compliance with this standard for conditions described in 11.2.5.

Copyright 2014 National Fire Protection Association (NFPA). Licensed, by agreement, for individual use and download on October 4, 2014 to LEADER and READER for designated user PATTARAPORN SRITRAKOOL. No other reproduction or transmission in any form permitted without written permission of NFPA. For inquires or to report unauthorized use, contact licensing@nfpa.org.



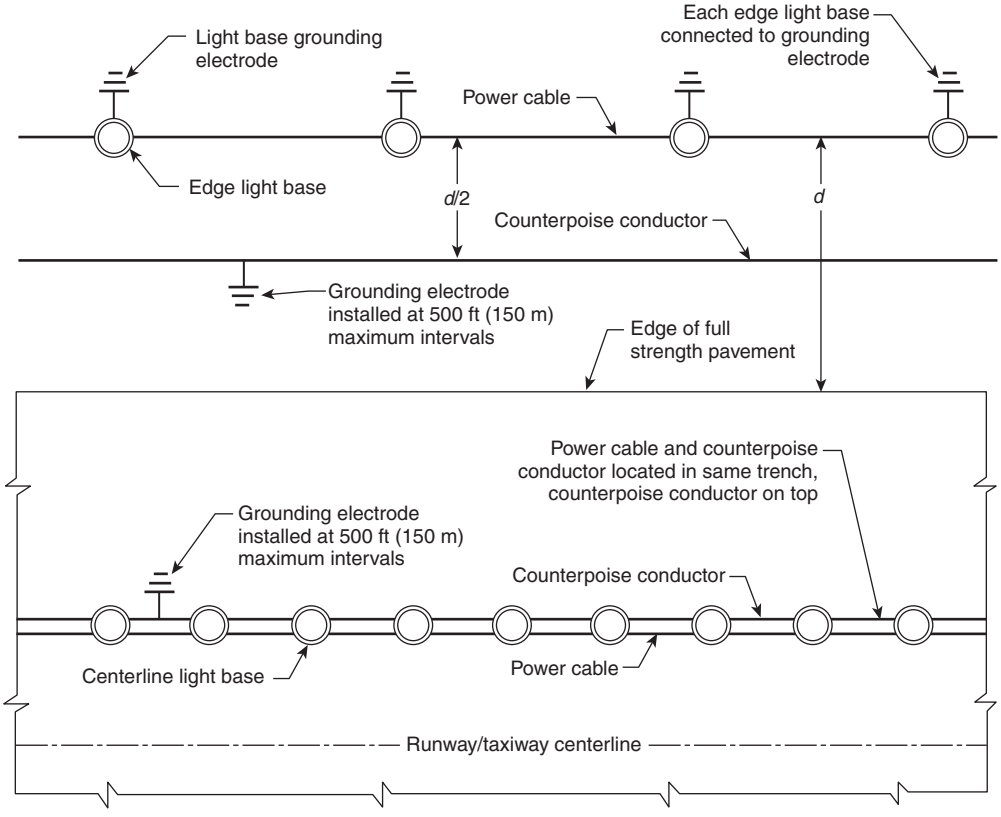


Notes:
1. Provide a second trench for the edge light counterpoise conductor. Normally the edge light counterpoise conductor is routed around the light base a minimum of 12 in. (305 mm) toward the full strength pavement.
2. The centerline light counterpoise conductor is shown parallel to the raceway or cable being protected for graphic simplicity. The centerline light counterpoise conductor is actually installed above and centered over the raceway or cable to be protected in accordance with 11.4.2.7. (*See Figure 11.4.2.7.*)
3. Grounding electrodes can be any of those described in 11.4.5.2. Ground rods are typically used for this application.

**FIGURE A.11.1.1(a) Isolation Method for Edge Lights Installed in Turf (Stabilized Soil).**

**A.11.3.2** The function of an airfield lighting counterpoise system is to provide a preferred, low-impedance path for lightning energy to earth.

**A.11.4.1** The copper counterpoise conductor size should be determined by the Engineer of Record based upon sound engineering practices. A 2 AWG bare solid copper counterpoise conductor is recommended.

The following factors should be evaluated when considering a larger-size counterpoise conductor:

(1) The airport's ability to maintain airport operations after an airfield lighting circuit or system failure
(2) Accessibility of the copper counterpoise conductor for repairs if the counterpoise conductor is installed under pavement
(3) Availability of qualified persons to perform airfield lighting system repairs
(4) Life cycle cost of the larger size counterpoise conductor, including consideration of counterpoise conductor replacement prior to the end of an expected 20-year life
(5) Results of a lightning risk assessment performed in accordance with Annex L
(6) Past performance of the airfield lighting counterpoise system at the airport or geographic area

The AHJ can determine and approve the size of the copper counterpoise conductor.

**A.11.4.2.4** A Chapter 4–compliant lightning protection system and SPDs could be installed at the airfield lighting vault or other airfield lighting circuit power source.

The need for an airfield lighting vault building lightning protection system, SPDs, or surge arresters should be determined by the Engineer of Record, based on sound engineering practices. Lightning protection systems, SPDs, and surge arresters are recommended for high-priority airfield lighting systems and airfield lighting systems installed in areas with a lightning flash density greater than two flashes per square kilometer per year.

The criteria in A.11.4.1 can be used to determine if the airfield lighting field circuits should be provided with surge arresters.

A lightning risk assessment performed in accordance with Annex L can be used to determine if the airfield lighting vault building or equivalent electrical equipment protective structure should be provided with a lightning protection system and SPDs in accordance with Chapter 4.

The AHJ can determine and approve the need for the airfield lighting vault building or equivalent electrical

Copyright 2014 National Fire Protection Association (NFPA). Licensed, by agreement, for individual use and download on October 4, 2014 to LEADER and READER for designated user PATTARAPORN SRITRAKOOL. No other reproduction or transmission in any form permitted without written permission of NFPA. For inquires or to report unauthorized use, contact licensing@nfpa.org.



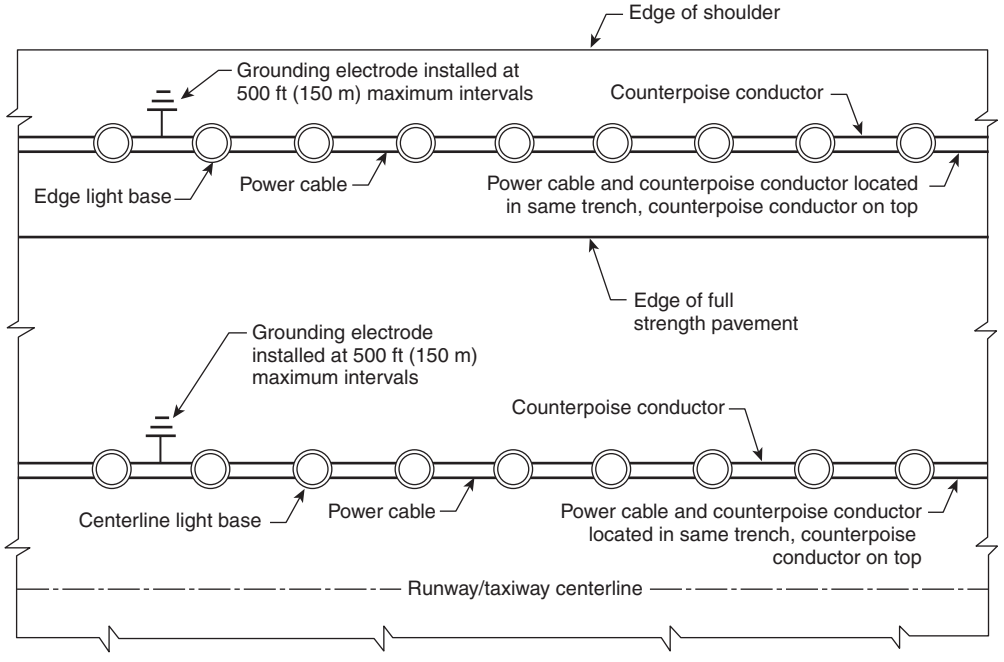


Notes:
1. The counterpoise conductors are shown parallel to the raceways or cables being protected for graphic simplicity. The counterpoise conductors are actually installed above and centered over the raceways or cables to be protected in accordance with 11.4.2.7. (*See Figure 11.4.2.7.*)
2. Grounding electrodes can be any of those described in 11.4.5.2. Ground rods are typically used for this application.

**FIGURE A.11.1.1(b) Equipotential Method.**

equipment protective structure lightning protection system, SPDs, and airfield lighting circuit surge arresters.

**A.11.4.2.6** Paragraph 11.4.2.6 addresses items installed in turf adjacent to the full strength pavement edge. Items within 15 ft (4.6 m) of the full strength pavement edge can be considered adjacent to the full strength pavement edge for the purpose of this paragraph. The exact routing of the counterpoise conductor could be subject to field conditions such as rocks or other obstructions. The counterpoise conductor should be routed as close as practicable to the midpoint between the full strength pavement edge and the item being protected.

**A.11.4.2.6.2** The light base grounding electrode can be installed in the same excavation as the light base or mounting stake. If a ground rod is used as the light base grounding electrode, the ground rod can be installed exterior to the light base or installed within the light base through a hole provided by the manufacturer in the bottom of the light base.

**A.11.4.2.7.2** Airfield pavement systems design is an intricate engineering solution involving a large number of complex variables. Operating aircraft and pavement systems interact with each other, which must be addressed by the pavement design process. Structural designs of airfield pavement systems include determination of the overall pavement system thickness to achieve the final design objectives. Airfield pavement systems are normally constructed in courses or layers.

Many factors influence the pavement system layer thicknesses required to provide satisfactory pavement system design. Among them are the type of pavement and the load-bearing capacity of the supporting materials, key components that affect the structural design of the pavement system.

A typical pavement system design might consist of the following layers:

(1) Conditioned and compacted earth fill and subgrade below the pavement system (typically 100 percent compaction required)
(2) Enhanced subbase course material, including additional layering, or enhanced existing subgrade
(3) Pavement base course (flexible or semirigid materials to support the pavement surface materials)
(4) Final pavement surface, either hot mix asphalt (HMA), a flexible pavement typically installed in multiple layers, or Portland cement concrete (PCC), a rigid pavement typically installed in one layer

The thickness of each of the overall pavement layers is determined by the structural requirements of the pavement system based on existing conditions, aircraft sizes and weights, number of repetitions, environmental factors, and other features.

The airfield lighting system is incorporated into the airfield pavement system. The design of the depth and the height of the various airfield lighting system components, including light bases, light base accessories, conduits, counterpoise conductors, and the like, must be adjusted to integrate the components into the varying pavement system layer thicknesses. Although reasonable effort should be made to comply with the 8 in. (203 mm) requirement contained in 11.4.2.7.1, it is for these reasons that the variation described in 11.4.2.7.2 is necessary.

**A.11.4.2.7.3** Where existing pavement cannot be cut, raceway is typically installed under the pavement by the directional bore, jack and bore, or other drilling method. Where raceway is installed by a drilling method, it is permissible to install the

Copyright 2014 National Fire Protection Association (NFPA). Licensed, by agreement, for individual use and download on October 4, 2014 to LEADER and READER for designated user PATTARAPORN SRITRAKOOL. No other reproduction or transmission in any form permitted without written permission of NFPA. For inquires or to report unauthorized use, contact licensing@nfpa.org.



counterpoise conductor concurrent with the drilling method raceway, external to the raceway or sleeve. This could result in the counterpoise conductor being wrapped around the raceway in an unknown position relative to the raceway or cable being protected. The installation of the counterpoise conductor is required to maintain the equipotential bonding of the overall lightning protection system. The lightning protection afforded by this process is reduced; however, this manner of installation is more effective than omission of the counterpoise conductor. This method is not recommended for projects where the pavement is being overlaid or replaced. The counterpoise conductor should be placed prior to any paving operations in accordance with the requirements of Chapter 11.

**A.11.4.2.7.6** The area of protection is considered to be an equilateral triangular cross-sectional area (triangular prism) with the apex located at the center of the counterpoise conductor, having its two sides formed by a 45-degree angle from vertical. The width of the protected area is twice the height of the counterpoise conductor above the raceway or cable being protected. See Figure A.11.4.2.7.6 for a typical area of protection application.

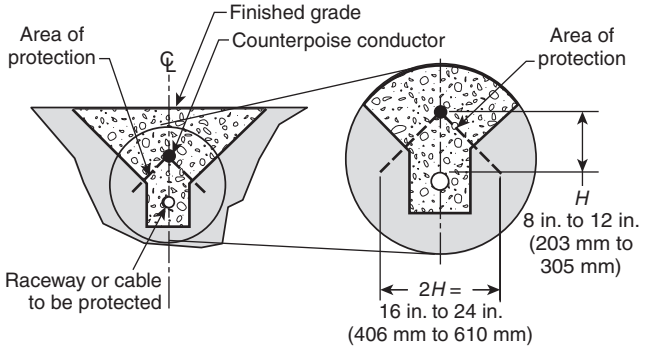


**FIGURE A.11.4.2.7.6 Area of Protection.**

**A.11.4.2.7.8** The intent of 11.4.2.7.8 is that all metallic light bases, metallic fixtures, metal manhole cover/frames, and the like be bonded to the counterpoise conductor. The phrase "output side of the constant current regulator (CCR) or power source" refers to the field circuit. The input power to the CCR or airfield lighting power source would be grounded in accordance with *NFPA 70, National Electrical Code.*

**A.11.4.3.1** Multiple raceways in a common assembly are also known as duct banks. Paragraph 11.4.3.1 addresses individual raceways or cables installed in a common excavation but separated by a greater-than-normal distance. For example, a control circuit and an airfield lighting series circuit could be installed in a common trench but separated by 12 in. (305 mm) or more to prevent interference on the control circuit.

**A.11.4.3.2** Standard trigonometric functions can be used to calculate the width of the area of protection with the counterpoise conductor at a specified height above the raceway or cable being protected. The maximum width of the area of protection is twice the height of the counterpoise conductor above the protected raceway or cable. A conservative design would have an overlap of adjacent areas of protection.

**A.11.4.4.2** One purpose of an equipotential airfield lighting counterpoise system is to provide equipotential bonding between all elements of the airfield lighting system. To achieve that objective, existing counterpoise conductors should be located and interconnected to new counterpoise conductors. Every reasonable and prudent means should be utilized to locate existing counterpoise conductors.

**A.11.4.5.1** The grounding electrode can be installed in the same excavation as the counterpoise conductor.

**A.11.4.5.2** The often accepted earth resistance value of 25 ohms should not be interpreted as satisfactory for all installations. *(Refer to B.4.4.)* Reduced earth resistance values might be necessary to provide effective lightning protection where the lightning risk assessment is high. Whether reduced earth resistance is necessary for protection of the airfield lighting system could be determined from A.11.4.1. The AHJ could define the required grounding electrode earth resistance value.

One common means of lowering the ground rod earth resistance is to add length to the ground rod. A simple way to add length to the ground rod is to use sectional ground rods. Additional sections of ground rod are added to the original ground rod and driven deeper into the earth to lower the earth resistance. An alternative is to lay rods horizontally and bond them together, forming a grid below grade. Other means of obtaining a satisfactory earth resistance are discussed in 4.13.8.

**A.11.4.6.5** Fixtures with exposed metal parts that might present a shock hazard should be bonded to the airfield lighting counterpoise system.

**A.11.4.7** A *ground strap with a ground clamp* is the terminology typically used by light base manufacturers for a light base grounding connection. Metallic light bases should be provided with internal and external ground straps, each provided with a ground clamp. Metallic light base accessories/extensions should be provided with an internal ground strap and ground clamp.

**A.11.4.8.1** Relevant standards could be ANSI/UL 467, *Grounding and Bonding Equipment*, ANSI/UL 96, *Standard for Lightning Protection Components*, and other standards applicable to this application.

**A.11.4.8.3** Connection of dissimilar metals requires special consideration of galvanically compatible fittings. See *NFPA 70, National Electrical Code*, Article 110.

**A.11.4.8.5** A ground strap with a ground clamp provided by the light base manufacturer is an acceptable means of bonding the counterpoise conductor to the metallic light base. Each manufacturer-provided ground clamp is acceptable for the connection of a single counterpoise conductor.

**A.11.4.8.6** Exothermic welding is not the recommended method of connecting the counterpoise conductor to a galvanized steel light base. Refer to FAA Advisory Circular 150/5340-30F, *Design and Installation Details for Airport Visual Aids*, Part 12.5.

**A.12.5.1.4** Bonding in accordance with Article 690, Part V, of *NFPA 70, National Electrical Code*, could be considered to make the metallic structure electrically continuous.

**A.12.5.2.2** Bonding in accordance with Article 690, Part V, of *NFPA 70, National Electrical Code*, could be considered to make the metallic structure electrically continuous.

Copyright 2014 National Fire Protection Association (NFPA). Licensed, by agreement, for individual use and download on October 4, 2014 to LEADER and READER for designated user PATTARAPORN SRITRAKOOL. No other reproduction or transmission in any form permitted without written permission of NFPA. For inquires or to report unauthorized use, contact licensing@nfpa.org.



## Annex B Principles of Lightning Protection

*This annex is not a part of the requirements of this NFPA document but is included for informational purposes only.*

**B.1 Fundamental Principles of Lightning Protection.**

**B.1.1** The fundamental principle in the protection of life and property against lightning is to provide a means by which a lightning discharge can enter or leave the earth without resulting damage or loss. A low-impedance path that the discharge current will follow in preference to all alternative high-impedance paths offered by building materials such as wood, brick, tile, stone, or concrete should be offered. When lightning follows the higher impedance paths, damage can be caused by the heat and mechanical forces generated during the passage of the discharge. Most metals, being good electrical conductors, are virtually unaffected by either the heat or the mechanical forces if they are of sufficient size to carry the current that can be expected. The metallic path should be continuous from the grounding electrode to the strike termination device. Care should be exercised in the selection of metal conductors to ensure the integrity of the lightning conductor for an extended period. A nonferrous metal such as copper or aluminum will provide, in most atmospheres, a lasting conductor free of the effects of rust or corrosion.

**B.1.2** Parts of structures most likely to be struck by lightning are those that project above surrounding parts, such as chimneys, ventilators, flagpoles, towers, water tanks, spires, steeples, deck railings, shafthouses, gables, skylights, dormers, ridges, and parapets. The edges and corners of the roof are the parts most likely to be struck on flat or gently sloping roofed buildings.

**B.2 Lightning Protection Systems.**

**B.2.1** Lightning protection systems consist of the following three basic parts that provide the low-impedance metal path required:

(1) A system of strike termination devices on the roof and other elevated locations
(2) A system of grounding electrodes
(3) A conductor system connecting the strike termination devices to the grounding electrodes

Properly located and installed, these basic components improve the likelihood that the lightning discharge will be conducted harmlessly between the strike termination devices and the grounding electrodes.

**B.2.2** While intercepting, conducting, and dissipating the main discharge, the three basic protection system components do not ensure safety from possible secondary effects of a lightning strike. Therefore, secondary conductors are provided to interconnect metal bodies to ensure that such metal bodies are maintained at the same electrical potential so as to prevent sideflashes or sparkover. Surge suppression devices are also provided to protect power lines and associated equipment from both direct discharges and induced currents.

**B.2.3** Metal parts of a structure can be used as part of the lightning protection system in some cases. For example, the structural metal framing, which has sufficient cross-sectional area to equal the conductivity of main conductors, and which is electrically continuous, can be used in lieu of separate down conductors. In such cases, air terminals can be bonded to the framework at the top, and grounding electrodes can be provided at the bottom, as described elsewhere in this standard. Structures with 3⁄16 in. (4.8 mm) thick, or thicker, metal shells or skins that are electrically continuous might not require a system of air terminals and down conductors.

**B.2.4** The structure should be examined, and installation of air terminals should be planned for all areas or parts likely to receive a lightning discharge. The object is to intercept the discharge immediately above the parts liable to be struck and to provide a direct path to earth, rather than to attempt to divert the discharge in a direction it would not be likely to take. The air terminals should be placed high enough above the structure to obviate danger of fire from the arc.

**B.3 Positioning of Air Terminals.** Positioning of air terminals depends upon the physical lightning model used to describe the behavior of lightning. The development of these models has been ongoing for 250 years, and models have a basis in physical observations of lightning. While the models tend to be simplified compared to actual details of lightning development and propagation, empirical observations over hundreds of years have proven their effectiveness.

Air terminals are intended to intercept the lightning event by providing a preferred attachment point for lightning's electrical discharge. They operate by actually providing an upward propagating leader of ionized air to intercept a downward lightning leader. Since these leaders are ionized air of opposite charge, they attract and provide the electrical channel to earth for lightning when they connect. Air terminals placed upon a structure do not substantially increase the probability of the structure being struck by lightning. If the downward progressing lightning leader is close to the structure, it will probably attach to that structure anyway. Thus, air terminals are designed to provide a preferential attachment point on structures that already provide a likely lightning attachment point. Once lightning connects to the air terminal, it is easier to control the lightning current and direct it to earth, as opposed to it taking a random, uncontrolled (and usually damaging) path through the structure otherwise.

**B.3.1 Physics of Lightning Attachment.** The first stroke of a ground flash is normally preceded by a downward-progressing, low-current leader discharge that commences in the negatively charged region of the cloud and progresses toward the earth, depositing negative charges in the air surrounding the leader discharge channel. (Occasionally, the downward leader can be positive in charge but this does not affect its behavior in terms of attachment.) When the lower end of the downward leader is 330 ft to 1000 ft (100 m to 300 m) from the earth or grounded objects, upward leaders are likely to be initiated from prominent points on grounded objects and to propagate toward the downward leader. Several upward leaders might start, but usually only one is successful in reaching the downward leader.

The high current phase (return stroke) commences at the moment the upward leader connects with the downward leader. The position in space of the lower portion of the lightning discharge channel is therefore determined by the path of the successful leader (i.e., the one that succeeded in reaching the downward leader). The primary task in protecting a structure is to ensure a high probability that the successful leader originates from the air terminals and not from a part of the structure that would be adversely affected by the lightning current that subsequently flows.

As the path of the successful leader can have a large horizontal component as well as a vertical component, an elevated

Copyright 2014 National Fire Protection Association (NFPA). Licensed, by agreement, for individual use and download on October 4, 2014 to LEADER and READER for designated user PATTARAPORN SRITRAKOOL. No other reproduction or transmission in any form permitted without written permission of NFPA. For inquires or to report unauthorized use, contact licensing@nfpa.org.



air terminal will provide protection for objects spread out below it. It is therefore possible to provide protection for a large volume with correctly positioned air terminals. This is the basis for the concept of a "zone of protection" and provides the basic principle underlying lightning protection.

Therefore, the function of an air terminal in a lightning protection system is to divert to itself the lightning discharge that might otherwise strike a vulnerable part of the object to be protected. It is generally accepted that the range over which an air terminal can intercept a lightning discharge is not constant, but increases with the severity of the discharge.

The upper outer edges and corners of buildings or structures, and especially protruding parts, are likely to have higher local electric fields than elsewhere, and are therefore likely places for the initiation of upward leaders. Consequently, the most probable strike attachment point on a building is the edge, corner, or other protruding part in the vicinity of the downward leader. Hence, if air terminals are placed at all locations where high electric fields and leader initiation are likely, there will be a high probability that the discharge will be intercepted successfully. These fields are not as strong on flat surfaces as they are on edges and corners and consequently are less likely to be struck.

**B.3.2 Overview of Methods.** A "design method" is used to identify the most suitable locations for placing strike termination devices, based on the area of protection afforded by each one. The following are the two categories of "placement methods" as used in NFPA 780:

(1) Purely geometrical constructions, such as the "cone of protection" or "protection angle" method.
(2) Electrogeometric models (EGMs), in which empirical relationships for striking distance and lightning peak current are invoked. The most common example is the "rolling sphere method," which is also partly a geometric construction.

**B.3.2.1 Cone of Protection Protection Angle Method.** This method is based on the assumption that an air terminal or an elevated, grounded object creates an adjacent, conical space that is essentially immune to lightning. The concept of a cone of sufficient angle to define the protected zone has its roots in the very beginning of lightning protection studies. Although Franklin recognized a limit as to the range of the air terminal in the late 1700s, the concept was first formally proposed by the French Academy of Sciences in 1823 and initially used a base of twice the height (i.e., an angle of 63 degrees). By 1855, this angle was changed to 45 degrees due to field reports that the original method was failing. Generally, this angle was preserved in standards for more than 100 years. In some standards today, a variable angle depending on the height of the structure is used. In addition, this protective angle can be increased when considering the placement of air terminals on the interior of large flat surfaces, due to the reduced electric field strength.

A cone of protection is limited; this is articulated by the requirements in Chapter 4.

**B.3.2.2 Rolling Sphere Method.** The rolling sphere method was incorporated into NFPA 780 in the 1980 edition. It originated from the electric power transmission industry (lightning strike attachment to phase and shield wires of lines) and is based on the simple electrogeometric model. To apply the method, an imaginary sphere is rolled over the structure. All surface contact points are deemed to require protection, while the unaffected surfaces and volumes are deemed to be protected, as shown in Figure B.3.2.2.

The physical basis for the rolling sphere method is the electrogeometric model. Consider a particular peak lightning current $I_p$ (kA) and the corresponding striking distance $d_s$ (m), where $d_s = 10\ I_p^{0.65}$. For a typical peak current of 10 kA, the striking distance is approximately 150 ft (45 m). This is the distance at which a downward leader results in the initiation of an upward leader from the structure.

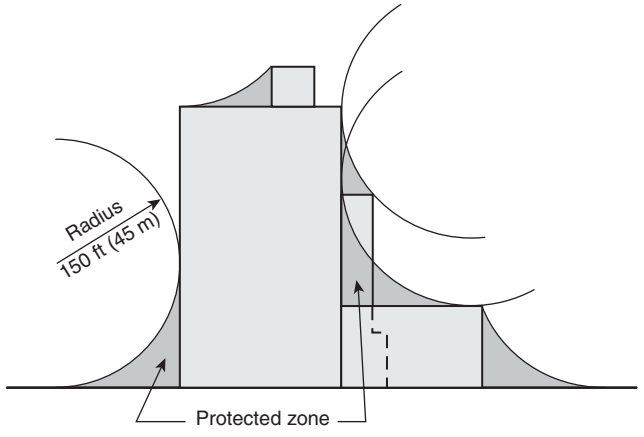


**FIGURE B.3.2.2 Lightning Protection Design Using the Rolling Sphere Method.**

Note that a smaller striking distance (implying a lower peak current of the lightning event) results in a smaller sphere that can intrude upon the standard 150 ft (45 m) zone of protection. Thus, a more conservative design is to size the sphere using a lower lightning peak current. Lightning peak currents below 5 kA to 7 kA are not common. Ten kA peak current represents 91 percent of all lightning events.

The advantage of the rolling sphere method is that it is relatively easy to apply, even to buildings with complicated shapes. However, since it is a simplification of the physical process of lightning attachment to a structure, it has some limitations. The main limitation is that it assigns an equal leader initiation ability to all contact points on the structure; no account is taken of the influence of electric fields in initiating return streamers, so it does not distinguish between likely and unlikely lightning strike attachment points. In other words, for a given prospective peak stroke current, the striking distance $d_s$ is a *constant value*. This simplification stems from the RSM's origins in the electrical power transmission industry, where there is considerable uniformity in the parameters of transmission lines (diameters, heights, etc.). In reality, lightning could preferentially strike the corner of a building rather than the vertical flat surface halfway down the side of the building. The same claims apply to the flat roof of a structure.

Some qualitative indication of the probability of strike attachment to any particular point can be obtained if the sphere is supposed to be rolled over the building in such a manner that its center moves at constant speed. Then the length of time that the sphere dwells on any point of the building gives a qualitative indication of the probability of that point being struck. Thus, for a simple rectangular building with a flat roof, the dwell time would be large at the corners and edges and

Copyright 2014 National Fire Protection Association (NFPA). Licensed, by agreement, for individual use and download on October 4, 2014 to LEADER and READER for designated user PATTARAPORN SRITRAKOOL. No other reproduction or transmission in any form permitted without written permission of NFPA. For inquires or to report unauthorized use, contact licensing@nfpa.org.



small at any point on the flat part of the roof, correctly indicating a higher probability of the corners or edges being struck and a low probability that a point on the flat part of the roof will be struck.

Where the RSM is applied to a building of height greater than the selected sphere radius, the sphere touches the vertical edges on the sides of the building at all points above a height equal to the sphere radius. This indicates the possibility of strikes to the sides of the building and raises the question of the need for an air terminal network in these locations. Studies show that strikes to vertical edges on the sides of tall buildings do occur but are not very common. There are theoretical reasons for believing that only flashes with low $I_p$, and consequently low $d_s$, values are likely to be able to penetrate below the level of the roof of a building and strike the sides. Hence, the consequences of a strike to the sides of a building could result in damage of a minor nature. Unless there are specific reasons for side protection, as would be the case of a structure containing explosives, it is considered that the cost of side protection would not normally be justified.

**B.4 Items to Consider When Planning Protection.**

**B.4.1** The best time to design a lightning protection system for a structure is during the structure's design phase, and the best time to install the system can be during construction. System components can be built in so as to be protected from mechanical displacement and environmental effects. In addition, aesthetic advantages can be gained by such concealment. Generally, it is less expensive to meet lightning protection requirements during construction.

**B.4.2** Conductors should be installed to offer the least impedance to the passage of stroke current between the strike termination devices and earth. The most direct path, without sharp bends or narrow loops, is best. The impedance of the conductor system is practically inversely proportional to the number of widely separated paths. Accordingly, there should be at least two paths to ground and more, if practicable, from each strike termination device. The number of paths is increased and the impedance decreased by connecting the conductors to form a cage enclosing the building.

**B.4.3** Properly made ground connections are essential to the effective functioning of a lightning protection system, and every effort should be made to provide ample contact with the earth. This does not necessarily mean that the resistance of the ground connection should be low, but rather that the distribution of metal in the earth or upon its surface in extreme cases should be such as to permit the dissipation of a stroke of lightning without damage.

**B.4.4** Low resistance is desirable, but not essential, as shown by the extreme case on the one hand of a building resting on moist clay soil, and on the other by a building resting on bare solid rock.

**B.4.4.1** In the first case, if the soil is of normal resistivity of from 4000 ohm-centimeters to 50,000 ohm-centimeters, the resistance of a ground connection made by extending the conductor 10 ft (3 m) into the ground will be from about 15 ohms to 200 ohms, and two such ground connections on a small rectangular building have been found by experience to be sufficient. Under these favorable conditions, providing adequate means for collecting and dissipating the energy of a flash without serious chance of damage is a simple and comparatively inexpensive matter.

**B.4.4.2** In the second case, it would be impossible to make a ground connection in the ordinary sense of the term because most kinds of rocks are insulating, or at least of high resistivity, and in order to obtain effective grounding other more elaborate means are necessary. The most effective means would be an extensive wire network laid on the surface of the rock surrounding the building to which the down conductors could be connected. The resistance to earth at some distant point of such an arrangement would be high, but at the same time the potential distribution about the building would be substantially the same, as though the building were resting on conducting soil, and the resulting protective effect also would be substantially the same.

**B.4.5** In general, the extent of the grounding arrangements depends on the character of the soil, ranging from simple extension of the conductor into the ground where the soil is deep and of high conductivity to an elaborate buried network where the soil is very dry or of very poor conductivity. Where a network is required, it should be buried if there is soil enough to permit burial, as this adds to its effectiveness. Its extent will be determined largely by the judgment of the person planning the installation with due regard to the following rule: The more extensive the underground metal available, the more effective the protection.

**B.4.6** Where practicable, each grounding electrode connection should extend or have a branch that extends below and at least 2 ft (0.6 m) away from the foundation walls of the building in order to minimize the likelihood of damage to foundation walls, footings, and stemwalls.

**B.4.7** When a lightning conductor system is placed on a building, within or about which there are metal objects of considerable size within a few feet of a conductor, there will be a tendency for sparks or sideflashes to jump between the metal object and the conductor. To prevent damage, interconnecting conductors should be provided at all places where sideflashes are likely to occur.

**B.4.8** Lightning currents entering protected buildings on overhead or underground power lines, telephone conductors, or television or radio antennas are not necessarily restricted to associated wiring systems and appliances. Therefore, such systems should be equipped with appropriate protective devices and bonded to ensure a common potential.

**B.4.9** Because a lightning protection system is expected to remain in working condition for long periods with minimum attention, the mechanical construction should be strong, and the materials used should offer resistance to corrosion and mechanical injury.

**B.5 Inspection and Maintenance of Lightning Protection Systems.** It has been shown that, in cases where damage has occurred to a protected structure, the damage was due to additions or repairs to the building or to deterioration or mechanical damage that was allowed to go undetected and unrepaired, or both. Therefore, it is recommended that an annual visual inspection be made and that the system be thoroughly inspected every five years.

**B.6 Indirect Losses.** In addition to direct losses such as destruction of buildings by lightning, fire resulting from lightning, and the killing of livestock, indirect losses sometimes accompany the destruction or damage of buildings and their contents. An interruption to business or farming operations, especially at certain times of the year, might involve losses

Copyright 2014 National Fire Protection Association (NFPA). Licensed, by agreement, for individual use and download on October 4, 2014 to LEADER and READER for designated user PATTARAPORN SRITRAKOOL. No other reproduction or transmission in any form permitted without written permission of NFPA. For inquires or to report unauthorized use, contact licensing@nfpa.org.



quite distinct from, and in addition to, the losses arising from the direct destruction of material property. There are cases where whole communities depend on the integrity of a single structure for their safety and comfort. For example, a community might depend on a water-pumping plant, a telephone relay station, a police station, or a fire station. A stroke of lightning to the unprotected chimney of a pumping plant might have serious consequences such as a lack of sanitary drinking water, irrigating water, or water for fire protection. Additional information on this topic is available in the documents identified in Annex O.

## Annex C Explanation of Bonding Principles

*This annex is not a part of the requirements of this NFPA document but is included for informational purposes only.*

**C.1 General.** Lightning strikes can give rise to harmful potential differences in and on a building. The major concern in the protection of a building is the occurrence of potential differences between the conductors of the lightning protection system and other grounded metal bodies and wires belonging to the building. These potential differences are caused by resistive and inductive effects and can be of such a magnitude that dangerous sparking can occur. In order to reduce the possibility of sparking, it is necessary to equalize potentials by bonding grounded metal bodies to the lightning protection system.

Where installing (or modifying) lightning protection systems on existing structures, bonding of certain grounded metal bodies can present difficult installation problems due to the inaccessibility of building systems. Placement of conductors to avoid grounded metal bodies or increasing the number of down conductors to shorten the required bonding distances are options that can be used to overcome these problems.

**C.2 Potential Differences.** Figure C.2 illustrates the generation of potential differences between conductors of the lightning protection system and other grounded metal bodies and wires.

**C.2.1 Resistive Effect.** In the situation in which conductor *C* is connected only to a grounding electrode and the water pipe is independently grounded, a large potential can exist between *B* and *F*. Assuming a resistance of 20 ohms between *C* and ground and a lightning current of 100,000 A, then Ohm's law (voltage = current × resistance) indicates that a potential of 2 million volts exists on conductor *ABC*. Because no current is initially passing through the water pipe, its potential is zero volts. The difference of potential of 2 million volts between *B* and *F* is sufficient for a sideflash of over 6 ft (1.8 m). To reduce the potential to essentially zero, this standard requires equalization of potentials at ground level in accordance with 4.15.1. Such a bond is shown as *CD* in Figure C.2.

With bond *CD* in position, the resistance between *B* and *F* is essentially zero; hence, during a lightning strike, the potential at *B* due to the resistive effect is similar to that at *F*. Therefore, the resistive effect can be neglected for bonding purposes.

**C.2.2 Inductive Effect.** When a large current passes down the lightning conductor *ABC*, a magnetic field is generated in circular motion around the conductor as shown in Figure C.2. The higher the lightning current, the higher the magnetic field. These magnetic field lines can be referred to as *magnetic flux*.

The loop *BCDEF* is intercepted by these lines of magnetic flux. The rate of change of the flux passing through this loop induces a voltage in the loop, creating a potential difference between *B* and *F*. This potential difference can be in the order of a few million volts, again causing a sideflash.

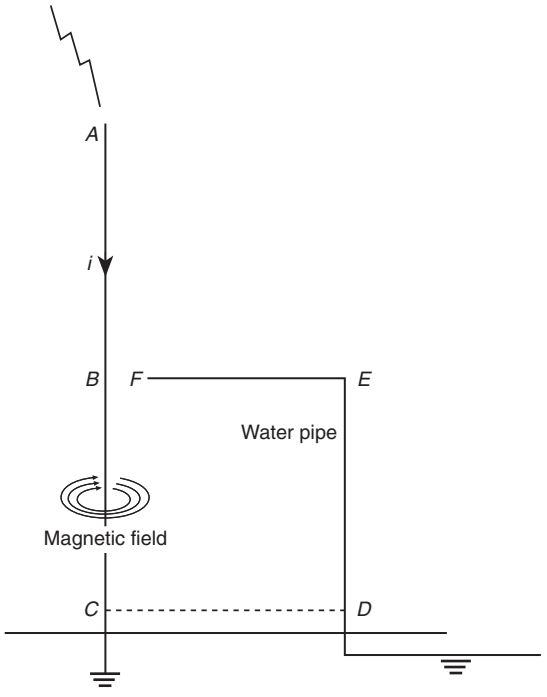


**FIGURE C.2 The Magnetic Field Around a Conductor.**

The bonding techniques described in this standard call for bonding the gaps over which high potentials exist, such as *BF*, in order to remove the spark and provide a safe path to ground for the current. The bonding-distance formulas are calculated from the laws of physics, making assumptions on the relevant lightning characteristics that influence the induced voltage. The assumptions for this standard are based on an extremely severe lightning current, thereby providing a bonding distance that is almost totally protective.

The voltage across the gap *BF* is related to the size of the loop *BCDEF* but dominantly to the height *BC* rather than the horizontal measure *CD*; hence the height *h* term is used in the formulas of 4.16.2. Equalizing the potentials at frequent heights in accordance with Section 4.15 also reduces the size of the loop *BCDEF*, thereby keeping the gap voltage to a controllable value that can be removed by simple bonding.

**C.2.3 Power and Communications Services.** One factor that is difficult to control is the problem related to power and communication lines entering the building. For all intents, such lines are at ground potential relative to the extremely high induced voltages. If the line *DEF* were such an electrical, telephone, power, or data line not bonded at ground, the voltage across the loop would be enhanced by the resistive effect described by Ohm's law as well as by the inductive effect. Hence, *BF* could soon approach breakdown, which would lead to sparks causing fire, as well as the obvious electrical, electronic, and human life problems. All such lines entering the building should have electrical bonding through surge protection as specified in Section 4.20, thereby reducing the resistive component and controlling dangerous sparking and damage. If just one wire, however, does not have such suppression devices, the dangers described still exist to the protected building and the electrical equipment. Table C.2.3 shows sample calculations.

Copyright 2014 National Fire Protection Association (NFPA). Licensed, by agreement, for individual use and download on October 4, 2014 to LEADER and READER for designated user PATTARAPORN SRITRAKOOL. No other reproduction or transmission in any form permitted without written permission of NFPA. For inquires or to report unauthorized use, contact licensing@nfpa.org.



**Table C.2.3 Sample Calculations of Bonding Distances**

| *h* | | | *D* | | | | | |
|---|---|---|---|---|---|---|---|---|
| | | | *n* = 1.0 | | *n* = 1.5 | | *n* = 2.25 | |
| ft | m | $K_m$ | ft | m | ft | m | ft | m |
| 10 | 3.05 | 1 | 1 ft 8 in. | 0.50 | 1 ft 1⅜ in. | 0.33 | 9 in. | 0.22 |
| | | 0.5 | 10 in. | 0.25 | 6¾ in. | 0.17 | 4½ in. | 0.11 |
| 20 | 6.10 | 1 | 3 ft 4 in. | 1.01 | 2 ft 2¾ in. | 0.67 | 1 ft 6 in. | 0.45 |
| | | 0.5 | 1 ft 8 in. | 0.50 | 1 ft 1⅜ in. | 0.33 | 9 in. | 0.22 |
| 30 | 9.15 | 1 | 5 ft 0 in. | 1.52 | 3 ft 4 in. | 1.01 | 2 ft 2¾ in. | 0.67 |
| | | 0.5 | 2 ft 6 in. | 0.76 | 1 ft 8 in. | 0.50 | 1 ft 1⅜ in. | 0.33 |
| 40 | 12.2 | 1 | 6 ft 8 in. | 2.03 | 4 ft 6 in. | 1.37 | 3 ft | 0.91 |
| | | 0.5 | 3 ft 4 in. | 1.01 | 2 ft 3 in. | 0.68 | 1 ft 6 in. | 0.45 |

**C.2.4 Reduction of Potential Difference.** To reduce the voltage across the gap *BF* so as to make bonding less necessary, it is possible to provide more down conductors. This standard requires down conductors every 100 ft (30 m) *(see 4.9.10)*, but the number of down conductors, *n*, required in the bonding formulas of 4.16.2 is restricted. It can be shown theoretically for structures less than 60 ft (18 m) in height that for a series of planar down conductors spaced 50 ft (15 m) apart, *n* can be no larger than 1.5, and for a similar three-dimensional situation, *n* can be no larger than 2.25. These values of *n* also apply to the upper 60 ft (18 m) of a tall structure. As the lightning current passes into the lower portion of a tall structure, however, the value of *n* must be calculated on the assumption that the current flow down the structure is much more symmetrical through the down conductors. Using this assumption, for all but the upper 60 ft (18 m) of a structure, the bonding distance can be calculated from a formula involving a larger value of *n*, as shown in 4.16.2.

**C.2.5 Sideflash.** Sideflashing can easily occur to grounded objects within the building. The intensity of the electric field in air is greater than that in concrete by approximately a factor of 2, allowing for a reduction of the sideflash distance through a wall cavity.

If an individual touches a correctly bonded connection within the building, he or she should suffer no harm. This scenario is similar to that of a bird sitting on a high-voltage wire unaware that the bird's potential is changing from over a thousand volts positive to over a thousand volts negative several times a second.

## Annex D Inspection and Maintenance of Lightning Protection Systems

*This annex is not a part of the requirements of this NFPA document but is included for informational purposes only.*

### D.1 Inspection of Lightning Protection Systems.

**D.1.1 Frequency of Inspections.** It is understood that all new lightning protection systems must be inspected following completion of their installation. Recommended guidelines for the maintenance of the lightning protection system should be provided to the owner at the completion of installation.

It is important to make periodic inspections of existing systems. The interval between inspections should be determined by factors such as the following:

(1) Classification of the structure or area protected
(2) Level of protection afforded by the system
(3) Immediate environment (corrosive atmospheres)
(4) Materials from which system components are made
(5) Type of surface to which the lightning protection components are attached
(6) Trouble reports or complaints

**D.1.1.1** In addition to regular periodic inspections, a lightning protection system should be inspected whenever any alterations or repairs are made to a protected structure, as well as following any known lightning discharge to the system.

**D.1.1.2** It is recommended that lightning protection systems be visually inspected at least annually. In some areas where severe climatic changes occur, it might be advisable to visually inspect systems semiannually or following extreme changes in ambient temperatures. Complete, in-depth inspections of all systems should be completed every 3 to 5 years. It is recommended that critical systems be inspected every 1 to 3 years, depending on occupancy or the environment where the protected structure is located.

**D.1.1.3** In most geographical areas, and especially in areas that experience extreme seasonal changes in temperature and rainfall, it is advisable to stagger inspections so that earth resistance measurements, for example, are made in the hot, dry months as well as the cool, wet months. Such staggering of inspections and testing is important in assessing the effectiveness of the lightning protection system during the various seasons throughout the year.

**D.1.2 Visual Inspection.** Visual inspections are made to ascertain the following:

(1) The system is in good repair.
(2) There are no loose connections that might result in high-resistance joints.
(3) No part of the system has been weakened by corrosion or vibration.
(4) All down conductors and grounding electrodes are intact (nonsevered).

Copyright 2014 National Fire Protection Association (NFPA). Licensed, by agreement, for individual use and download on October 4, 2014 to LEADER and READER for designated user PATTARAPORN SRITRAKOOL. No other reproduction or transmission in any form permitted without written permission of NFPA. For inquires or to report unauthorized use, contact licensing@nfpa.org.



(5) All conductors and system components are fastened securely to their mounting surfaces and are protected against accidental mechanical displacement as required.
(6) There have not been additions or alterations to the protected structure that would require additional protection.
(7) There is no visual indication of damage to surge suppression (overvoltage) devices.
(8) The system complies in all respects with the current edition of this standard.

**D.1.3 Complete Testing and Inspection.** Complete testing and inspection includes the visual inspections described in D.1.2 and the following:

(1) Tests to verify continuity of those parts of the system that were concealed (built in) during the initial installation and that are now not available for visual inspection.
(2) Ground resistance tests of the grounding electrode termination system and its individual grounding electrodes, if adequate disconnecting means have been provided. These test results should be compared with previous or original results or current accepted values, or both, for the soil conditions involved. If it is found that the test values differ substantially from previous values obtained under the same test procedures, additional investigations should be made to determine the reason for the difference.
(3) Continuity tests to determine if suitable equipotential bonding has been established for any new services or constructions that have been added to the interior of the structure since the last inspection.

**D.1.4 Inspection Guides and Records.** Inspection guides or forms should be prepared and made available to the authority responsible for conducting inspections of lightning protection systems. These forms should contain sufficient information to guide the inspector through the inspection process so that he or she can document all areas of importance relating to the methods of installation, the type and condition of system components, test methods, and the proper recording of the test data obtained.

**D.1.5 Records and Test Data.** The inspector or inspection authority should compile and maintain records pertaining to the following:

(1) General condition of air terminals, conductors, and other components
(2) General condition of corrosion-protection measures
(3) Security of attachment of conductors and components
(4) Resistance measurements of various parts of the grounding electrode system
(5) Any variations from the requirements contained in this standard

**D.2 Maintenance of Lightning Protection Systems.**

**D.2.1 General.** Maintenance of a lightning protection system is extremely important even though the lightning protection design engineer has taken special precautions to provide corrosion protection and has sized the components according to their particular exposure to lightning damage. Many system components tend to lose their effectiveness over the years because of corrosion factors, weather-related damage, and stroke damage. The physical as well as the electrical characteristics of the lightning protection system must be maintained in order to remain in compliance with design requirements.

**D.2.2 Maintenance Procedures.**

**D.2.2.1** Periodic maintenance programs should be established for all lightning protection systems. The frequency of maintenance procedures is dependent on the following:

(1) Weather-related degradation
(2) Frequency of stroke damage
(3) Protection level required
(4) Exposure to stroke damage

**D.2.2.2** Lightning protection system maintenance procedures should be established for each system and should become a part of the overall maintenance program for the structure that it protects.

A maintenance program should contain a list of more or less routine items that can serve as a checklist and can establish a definite maintenance procedure that can be followed regularly. It is the repeatability of the procedures that enhances the effectiveness of a good maintenance program.

A good maintenance program should contain provisions for the following:

(1) Inspection of all conductors and system components
(2) Tightening of all clamps and splicers
(3) Measurement of lightning protection system resistance
(4) Measurement of resistance of grounding electrodes
(5) Inspection, testing, or both of surge suppression devices to determine their effectiveness compared with similar new devices
(6) Refastening and tightening of components and conductors as required
(7) Inspection and testing as required to determine if the effectiveness of the lightning protection system has been altered by additions to or changes in the structure

**D.2.3 Maintenance Records.** Complete records should be kept of all maintenance procedures and routines and of corrective actions that have been or will be taken. Such records provide a means of evaluating system components and their installation. They also serve as a basis for reviewing maintenance procedures as well as updating preventive maintenance programs.

## Annex E Ground Measurement Techniques

*This annex is not a part of the requirements of this NFPA document but is included for informational purposes only.*

**E.1 General.**

**E.1.1** In order to determine the ground resistance of a lightning protection system, it is necessary to remove it from any other ground connection. This can prove to be a virtually impossible task, necessitating certain assumptions. In reality, ground resistance–measuring equipment works at low frequencies relative to the lightning discharge. The resistance it computes is therefore often affected by the resistance of power-system grounding electrodes or a similar ground medium that can be several thousand feet from the structure being protected. The ground resistance to be used to calculate lightning conductor potentials when a high-frequency lightning discharge strikes a building must be the grounds in the immediate area of the building, not the remote ones that ground-measuring equipment probably monitors.

**E.1.2** If the building is small and the lightning protection system can be disconnected totally from any other grounding network, the resistance of the system can be measured by the

Copyright 2014 National Fire Protection Association (NFPA). Licensed, by agreement, for individual use and download on October 4, 2014 to LEADER and READER for designated user PATTARAPORN SRITRAKOOL. No other reproduction or transmission in any form permitted without written permission of NFPA. For inquires or to report unauthorized use, contact licensing@nfpa.org.



three-point technique described in E.1.3. If the building is large or cannot be disconnected totally from any other grounding network, then the ground resistance of individual isolated lightning protection ground rods should be measured by the three-point technique described in E.1.3 and this resistance multiplied by a factor depending on the number of ground rods.

**E.1.3** The principle of ground resistance measurement is shown in Figure E.1.3. *L* is the lightning ground rod or ground rod system, *P* is a test probe, and *A* is an auxiliary current probe. *M* is the standard ac-measuring equipment for three-point technique ground resistance measurements. Convenient distances for *LP* and *LA* are 75 ft (23 m) and 120 ft (36 m), respectively. In general, *P* should be at 62 percent of the distance from *L* to *A*. If a distance of 120 ft (36 m) is not convenient, it could be increased significantly [or reduced to no less than 50 ft (15 m)], provided *LP* is increased proportionately.

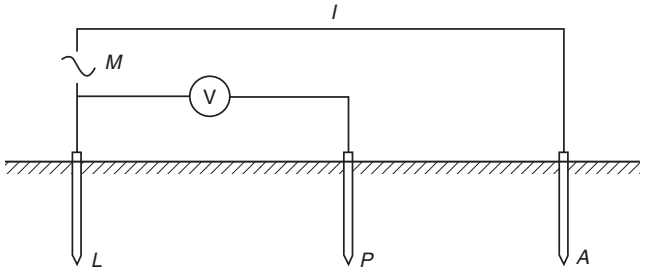


**FIGURE E.1.3 Measurement of Ground Resistance.**

A current, *I*, is passed through the electrode or electrodes to be tested, *L*, and through an auxiliary probe, *A*. The distance, *LA*, is long compared to the electrode length. The voltage, *V*, between *L* and *P* is measured by the test equipment, which also monitors *I* and calculates the ground resistance, *R*, as *V*/*I*. Alternating current is used to avoid errors due to electrolytic factors in the soil and to remove effects due to stray currents.

Three-point ground resistance–measuring equipment using these principles is relatively inexpensive and allows direct reading of *R*.

NOTE: The individual equipment manufacturer's recommended operational procedures should be used.

**E.1.4** Variations in soil resistivity due to temperature and moisture fluctuations can affect the measured ground resistance. A good designer will measure ground resistance under average or high resistivity conditions in order to design a lightning protection system to function adequately.

If the building ground is complex in nature, the resistance of single ground rods can be measured and certain assumptions made. The average single ground rod resistance, $R_m$, must be multiplied by a factor depending on the number of lightning protection ground rods, *n*, spaced at least 35 ft (10.7 m) apart.

The total system ground resistance, *R*, can be calculated from the formula:

$$R = 1.1\left(\frac{R_m}{n}\right)$$

where:

$R$ = total system ground resistance
$R_m$ = average single ground rod resistance
$n$ = number of lightning protection ground rods

## Annex F Protection for Trees

*This annex is not a part of the requirements of this NFPA document but is included for informational purposes only.*

**F.1 General.** Trees with trunks within 10 ft (3 m) of a structure or with branches that extend to a height above the structure should be equipped with a lightning protection system because of the danger of sideflash, fire, or superheating of the moisture in the tree, which could result in the splintering of the tree. It might be desirable to equip other trees with a lightning protection system because of a particular tree's value to the owner. Figure F.1 illustrates such protection.

Note that it should not be inferred that adding protection to a tree will ensure the safety of people seeking shelter under the tree during a thunderstorm. Possible sideflashes, step potential, and touch potentials could threaten the safety of people seeking shelter under trees even if the trees are protected.

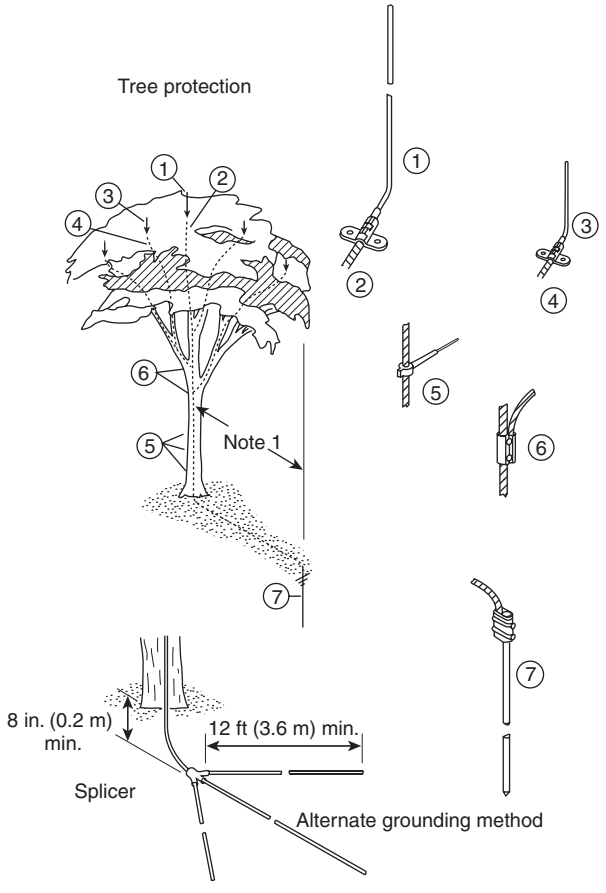


1. Main trunk air terminal
2. Class I or Class II bonding conductor
3. Branch air terminal
4. Branch conductor (bonding size conductor, minimum)
5. Drive-type cable clip no more than 6 ft (2 m) O/C
6. Splicer
7. Ground rod and clamp

Notes:
1. Locate grounding electrode at least 12 ft (3.6 m) from the trunk to avoid root damage.
2. Air terminal tip configurations can be sharp or blunt.

**FIGURE F.1 Protection for Trees.**

Copyright 2014 National Fire Protection Association (NFPA). Licensed, by agreement, for individual use and download on October 4, 2014 to LEADER and READER for designated user PATTARAPORN SRITRAKOOL. No other reproduction or transmission in any form permitted without written permission of NFPA. For inquires or to report unauthorized use, contact licensing@nfpa.org.



**F.2 Methods and Materials.**

**F.2.1 Conductors.** Conductors should conform to the requirements of Chapter 4 for bonding conductors.

**F.2.2 Coursing of Conductors.** A single conductor should be run from the highest part of the tree along the trunk to a ground connection. If the tree is forked, branch conductors should be extended to the highest parts of the principal limbs.

**F.2.3 Air Terminals.** The conductors should be extended to the highest part of the tree, terminating with an air terminal.

**F.2.4 Attachment of Conductors.** Conductors should be attached to the tree securely in such a way as to allow for swaying in the wind and growth without danger of breakage.

**F.2.5 Grounding Electrodes.** Grounding electrodes for conductors should be in accordance with the following:

(1) Be connected to all conductors that descend the trunk of the tree, extend one or more radial conductors in trenches 8 in. (0.2 m), and be spaced at equal intervals about the base to a distance not less than 10 ft (3 m) or a single driven ground rod installed at least 12 ft (3.6 m) from the tree trunk *(See Figure F.1.)*
(2) Have radial conductors extend not less than 12 ft (3.6 m)
(3) Be bonded to an underground metallic water pipe where available within 25 ft (7.6 m) of the branch line

## Annex G Protection for Picnic Grounds, Playgrounds, Ball Parks, and Other Open Places

*This annex is not a part of the requirements of this NFPA document but is included for informational purposes only.*

**G.1 Picnic Grounds and Playgrounds.** Protection from lightning can be provided by the methods indicated in G.1.1 or G.1.2.

**G.1.1** Design concerns for lightning protection systems on open shelters include the following:

(1) Step potential
(2) Touch potential
(3) Sideflash to persons and animals

Lightning protection systems for open shelters should conform to the requirements of Chapter 4 with the guidance given in G.1.1.1 through G.1.1.3.

**G.1.1.1 Step Potential Reduction.** Establishment of an electrically equipotential plane is desired to reduce step potential within the shelter perimeter. This can be accomplished by installation of a grounding grid or other equivalent method, including the following:

(1) Concrete-floor shelters might need no additional enhancement. However, for new construction, it is desirable to establish a grid below the surface of the concrete that should be bonded to the down-conductor system and the grounding system.
(2) Wood floors, or other essentially insulating flooring materials, should also have a grid installed as described in G.1.1.3.
(3) Earth-floored shelters should also have a grid installed as described in G.1.1.3.

**G.1.1.2 Sideflash and Touch Potential Reduction.** Additional measures to reduce the possibility of sideflash and touch potential within the structure include the following:

(1) Providing down conductors at each corner of a structure (four for a typical rectangular structure). Structures of irregular shape or with many sides should use no fewer than four down conductors if it is impractical to install one at each corner.
(2) Shielding down conductors to at least 8 ft (2.4 m) in height with electrically insulating material that is resistant to climatic conditions and impact. Where structural steel framework is used, electrical insulation of the structural steel is less critical due to the typically larger size of the structural steel framework and its lower inductive reactance. Insulation of the structural steel framework will further reduce the probability of sideflash and touch potential hazards.
(3) Bonding structural steel to the grounding electrode.

**G.1.1.3 Grounding.** Grounding terminations should be installed as specified in Chapter 4, with the following additional guidance:

(1) For existing concrete floors, a ground ring should be installed. As an additional precaution, radial grounding is recommended to be installed at points around the periphery.
(2) The grounding grid should be constructed of main-size interconnected copper conductors at no greater than 3 ft (0.9 m) spacing between conductors. The periphery of the grid should be interconnected. Burial of the grid should be at a depth of no less than 6 in. (150 mm) and no greater than 18 in. (460 mm).
(3) The grid perimeter should be connected to grounding electrodes with radial grounding extensions recommended.

**G.1.2 Masts and Overhead Ground Wires.** Masts (poles) on opposite sides of the grounds and near the edges should be erected. Overhead wires should be strung between the masts at least 20 ft (6 m) above the ground level. Down conductors should be connected to the overhead wires with grounding electrodes. Down conductors should be shielded to a height of not less than 8 ft (2.4 m) with material resistant to impact and climate conditions. The wires should be not less than 4 AWG copper or equivalent. Where steel masts are used, down leads are not necessary, but the foot of the mast should be grounded. If the area to be protected is extensive, it might be necessary to erect several masts around the perimeter so that the area is covered by a network of wires to form a zone of protection. *(See Figure 7.3.2.2 for an example.)*

**G.2 Ball Parks and Racetracks.**

**G.2.1 Roofed Grandstands.** Roofed grandstands are included within the scope of this standard.

**G.2.2 Open Grandstands and Open Spectator Areas.** Open grandstands and open spectator areas should be provided with masts and overhead ground wires as described in G.1.2.

**G.3 Beaches.** Beaches should be provided with shelters as described in G.1.1.

**G.4 Piers.**

**G.4.1 Covered Piers.** Covered piers are included within the scope of this standard.

Copyright 2014 National Fire Protection Association (NFPA). Licensed, by agreement, for individual use and download on October 4, 2014 to LEADER and READER for designated user PATTARAPORN SRITRAKOOL. No other reproduction or transmission in any form permitted without written permission of NFPA. For inquires or to report unauthorized use, contact licensing@nfpa.org.



**G.4.2 Open Piers.** Open piers should be provided with masts and overhead ground wires as described in G.1.2.

## Annex H Protection for Livestock in Fields

*This annex is not a part of the requirements of this NFPA document but is included for informational purposes only.*

**H.1 General.**

**H.1.1** The nature of the exposure of livestock in fields is such that it is not possible to eliminate the hazard entirely. However, application of the recommendations contained in this annex can minimize the hazard.

**H.1.2** The loss of livestock due to lightning during thunderstorms is caused in large measure by herds congregating under isolated trees in open pastures or drifting against ungrounded wire fences and receiving a sufficient discharge to kill them.

**H.1.3** In pastures where shelter is available from wooded areas of considerable size, isolated trees should be removed.

**H.1.4** Fences built with metal posts set in the earth are as safe from lightning as it is practical to make them, especially if the electrical continuity is broken. Breaking the electrical continuity is very useful in that it reduces the possibility of a lightning stroke affecting the entire length of a fence, as is possible if the stroke is direct and the fence continuous, even though it might be grounded. The fences that give rise to the most trouble are those constructed with posts of poorly conducting material, such as wood.

**H.2 Grounding of Wire Fences.**

**H.2.1 Nonconductive Posts.** Where it is desirable or necessary to mitigate the danger from wire fences constructed with posts of nonconducting material, H.2.2 and H.2.3 should be applied.

**H.2.2 Iron Posts.** Ground connections can be made by inserting galvanized-iron posts, such as are ordinarily used for farm fencing, at intervals and attaching in electrical contact all the wires of the fence. Grounding can also be achieved by driving a length of not less than ½ in. (12.7 mm) in diameter galvanized-iron pipe beside the fence and attaching the wires by ties of galvanized-iron wire. If the ground is normally dry, the intervals between metal posts should not exceed 150 ft (46 m). If the ground is normally damp, the metal posts can be placed up to 300 ft (92 m) apart.

**H.2.3 Depth of Grounds.** Pipes should be extended into the ground at least 2 ft (0.6 m).

**H.3 Breaking Continuity of Fence.**

**H.3.1** In addition to grounding the fence, its electrical continuity should be broken by inserting insulating material in breaks in the wires at intervals of about 500 ft (150 m). These insertions can be in the form of fence panels of wood or lengths of insulating material to the ends of which the wires can be attached. Such lengths of insulating material can consist of strips of wood about 2 in. × 2 in. × 24 in. (50 mm × 50 mm × 600 mm), or their equivalent as far as insulating properties and mechanical strength are concerned.

**H.3.2** In areas where herds can congregate along fences, the continuity should be broken at more frequent intervals than described in H.3.1.

## Annex I Protection for Parked Aircraft

*This annex is not a part of the requirements of this NFPA document but is included for informational purposes only.*

**I.1 General Principles.**

**I.1.1** For the purposes of this annex, aircraft includes airplanes, helicopters, and lighter-than-air craft. Aircraft can best be protected by being placed inside a lightning-protected hangar. Hangar facilities should be provided with grounding receptacles to permit interconnection of metal aircraft with the hangar lightning protection system. It is important that hangar floors, aprons, and aircraft parking areas be kept free of gasoline or other flammable liquids.

**I.1.2** All metal airplanes parked outside hangars should be grounded. This grounding can be achieved by the use of grounded metal tie-down cables or the equivalent. An aircraft having fabric or plastic covering materials can be protected by connecting its metal frame to ground. For additional protection of aircraft parked outside hangars, an overhead ground wire or mast-type lightning protection system can be provided. The height should be in accordance with the zones of protection described in Chapter 4.

**I.1.3** The effects of lightning strikes to metal and composite aircraft are a matter of continuous study. The use of surge suppression circuitry on critical navigational, radio-communication, and radar equipment can help to minimize these effects. Suitable equipment and electrical wiring layout can also aid in reducing lightning-induced problems.

**I.1.4** Commercial aircraft have grown considerably larger in recent years and in many cases are taller than surrounding airport terminal buildings. A review of available lightning-strike injury data indicates that nearly all of the reported personal injuries were the result of lightning-induced static discharge.

**I.1.5** The grounding methods used for aircraft undergoing fuel servicing and certain maintenance operations are not necessarily adequate to provide effective lightning protection for aircraft or persons. The installation of additional grounding straps, preferably at the aircraft's extremities, during thunderstorm activity will provide alternative paths to ground for any current flow resulting from the rapid adjustment in the aircraft surface charge. Experience has shown that additional grounding straps offer little protection in the event of a direct strike to the aircraft. Fuel servicing operations and other maintenance operations involving the use of flammable liquids or the release of flammable vapors should be suspended during lightning storms. Refer to NFPA 407, *Standard for Aircraft Fuel Servicing*, and NFPA 410, *Standard on Aircraft Maintenance*, for more information.

**I.1.6** Baggage handling, exterior maintenance, and servicing of parked aircraft should be suspended when a thunderstorm is in the vicinity of an airport. Lightning-warning equipment can be utilized to aid in determining when to suspend these operations. There are many detection methods capable of detecting and tracking approaching storms. One such method — atmospherics — is being used to establish lightning-detection networks that now cover approximately half of the United States. While atmospherics equipment can give positional information of distant lightning, it gives no warning of a cloud directly overhead becoming electrified. Devices that measure some property of the electric field can detect the development of a hazardous condition and provide a warning prior to the first discharge.

**I.1.7** Cables connected to parked aircraft should not be handled when a thunderstorm is in the vicinity. The use of hand signals, without the use of headsets, is recommended for ground-to-cockpit communications during this period.

Copyright 2014 National Fire Protection Association (NFPA). Licensed, by agreement, for individual use and download on October 4, 2014 to LEADER and READER for designated user PATTARAPORN SRITRAKOOL. No other reproduction or transmission in any form permitted without written permission of NFPA. For inquires or to report unauthorized use, contact licensing@nfpa.org.



## Annex J Reserved

## Annex K Reserved

## Annex L Lightning Risk Assessment

*This annex is not a part of the requirements of this NFPA document but is included for informational purposes only.*

**L.1 General.** This lightning risk assessment methodology is provided to assist the building owner, safety professional, or architect/engineer in determining the risk of damage or injury due to lightning. This annex provides a simplified, quick-look assessment (Section L.5) and a more detailed assessment for those requiring a more detailed analysis (Section L.6). Once the level of risk has been determined, the development of appropriate lightning protection measures can begin.

**L.1.1** There are some cases where the need for protection should be given serious consideration regardless of the outcome of the risk assessment. Examples are those applications where the following are factors:

(1) Large crowds
(2) Continuity of critical services
(3) High lightning flash frequency
(4) Tall isolated structure
(5) Building containing explosive or flammable materials
(6) Building containing irreplaceable cultural heritage

**L.1.1.1** Statutory, regulatory, and insurance requirements for the installation of a lightning protection system should take precedence over the results of a risk assessment.

**L.1.1.2** When required, a lightning protection system should be installed in accordance with the requirements contained in this standard.

**L.1.2** The vulnerability of a structure or object to lightning involves evaluation of the equivalent collection area of the structure or object and the flash density for the area in which the structure is located.

**L.1.3** This risk assessment method is a guide that takes into account the lightning threat parameters and the following factors:

(1) Building environment
(2) Type of construction
(3) Structure occupancy
(4) Structure contents
(5) Lightning stroke consequences

**L.1.4** Lightning risk for a structure is the product of the lightning frequency, exposure vulnerability, and the consequence of the strike to the structure or object.

**L.2 Lightning Flash Density ($N_g$).** Lightning flash density, the yearly number of flashes to ground per square kilometer, can be found in Figure L.2.

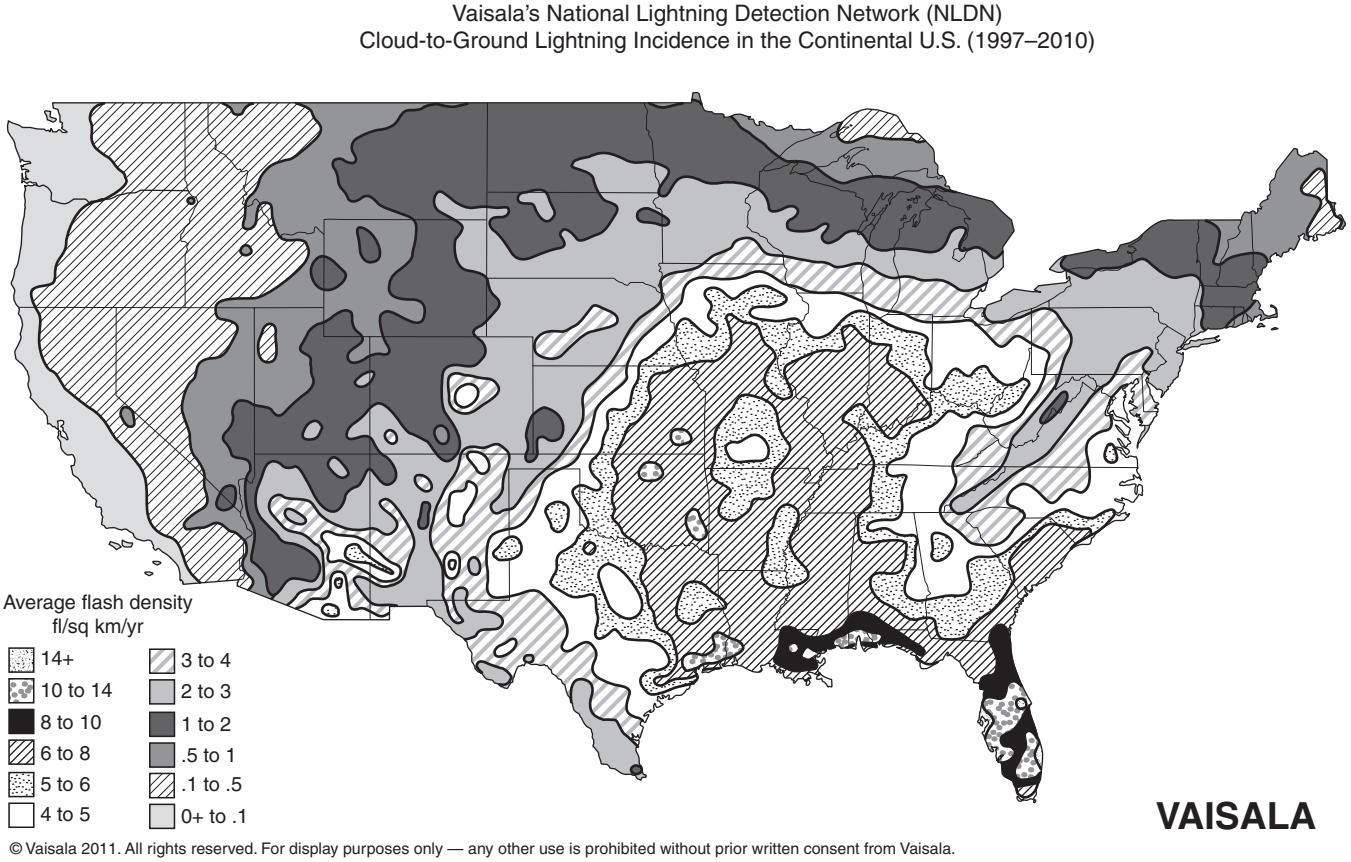


**FIGURE L.2 1997–2010 Average U.S. Lightning Flash Density Map (flashes per square kilometer per year).** ***(Courtesy Vaisala, Inc.)***

Copyright 2014 National Fire Protection Association (NFPA). Licensed, by agreement, for individual use and download on October 4, 2014 to LEADER and READER for designated user PATTARAPORN SRITRAKOOL. No other reproduction or transmission in any form permitted without written permission of NFPA. For inquires or to report unauthorized use, contact licensing@nfpa.org.



**L.3 Annual Threat of Occurrence ($N_d$).** The yearly annual threat of occurrence (lightning strike frequency) ($N_d$) to a structure is determined by the following equation:

$$N_d = (N_g)(A_e)(C_1)(10^{-6}) = \text{potential events/yr}$$

where:
$N_d$ = yearly lightning strike frequency to the structure or object
$N_g$ = lightning ground flash density in flashes/km$^2$/year
$A_e$ = the equivalent collection area of the structure (m$^2$)
$C_1$ = environmental coefficient

**L.4 Equivalent Collection Area ($A_e$).** $A_e$ refers to the equivalent ground area having the equivalent lightning flash vulnerability as the structure. It is an area adjusted for the structure that includes the effect of the height and location of the structure.

**L.4.1** The equivalent ground collection area of a structure is the area obtained by extending a line with a slope of 1 to 3 from the top of the structure to ground completely around the structure. The equivalent collection area can be developed either numerically or by graphical methods.

**L.4.1.1** The equivalent collection area of a rectangular structure with length $L$, width $W$, and height $H$ *(see Figure L.4.1.1)* is as follows:

$$A_e = LW + 6H(L+W) + \pi 9H^2$$

**L.4.1.2** The equivalent collection area of complex structures can be developed by numerical or graphical methods. *[See Figure L.4.1.2(a) and Figure L.4.1.2(b) for examples of complex structures.]*

**L.4.2** The location factor accounts for the topography of the site of the structure and any objects located within the distance $3H$ from the structure that can affect the collection area. Location factors are given in Table L.4.2.

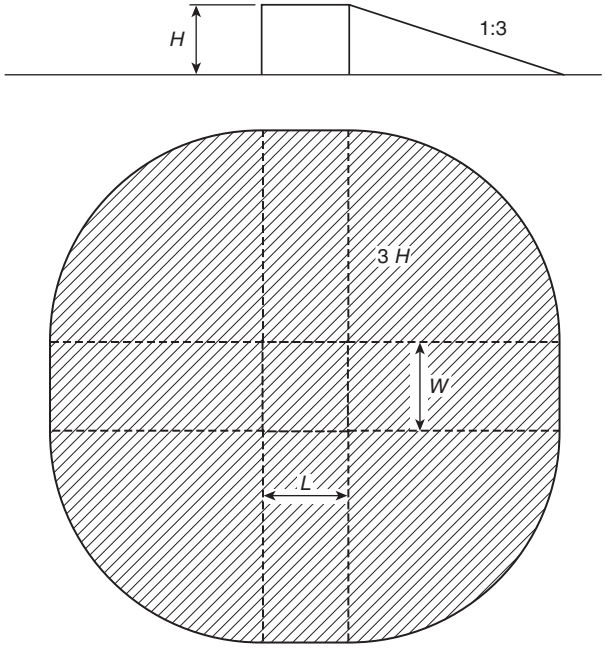


**FIGURE L.4.1.1 Calculation of the Equivalent Ground Collection Area for a Rectangular Structure.**

**L.4.3** Where the equivalent collection area of one structure or object totally encompasses another structure, the covered structure is disregarded.

**L.4.4** When the collection areas of several structures overlap, the corresponding common collection area is considered as a single collection area.

**L.5 Simplified Risk Assessment.**

**L.5.1 General.**

**L.5.1.1** A simplified risk assessment calculates the tolerable lightning frequency ($N_c$) and compares it to the annual threat of occurrence ($N_d$) calculated according to Section L.3. The tolerable lightning frequency ($N_c$) is a measure of the risk of damage to the structure, including factors affecting risks to

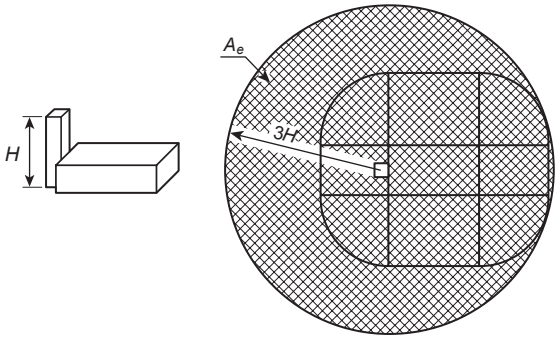


Note: For a structure where a prominent part encompasses all portions of the lower part, $A_e = \pi 9H^2$.

**FIGURE L.4.1.2(a) Calculation of the Equivalent Collection Area for a Complex Shape Structure Where a Prominent Part Encompasses All Portions of the Lower Part.**

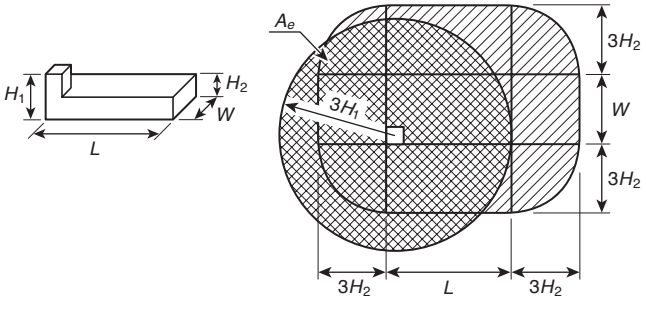


**FIGURE L.4.1.2(b) Graphical Solution of the Equivalent Collection Area for a Structure Where a Prominent Part Encompasses Part of the Lower Structure.**

**Table L.4.2 Location Factor, $C_1$**

| Relative Structure Location | $C_1$ |
|---|---|
| Structure surrounded by taller structures or trees within a distance of $3H$ | 0.25 |
| Structure surrounded by structures of equal or lesser height within a distance of $3H$ | 0.5 |
| Isolated structure, with no other structures located within a distance of $3H$ | 1 |
| Isolated structure on hilltop | 2 |

Copyright 2014 National Fire Protection Association (NFPA). Licensed, by agreement, for individual use and download on October 4, 2014 to LEADER and READER for designated user PATTARAPORN SRITRAKOOL. No other reproduction or transmission in any form permitted without written permission of NFPA. For inquires or to report unauthorized use, contact licensing@nfpa.org.



the structure, to the contents, and of environmental loss. It is calculated by dividing the acceptable frequency of property losses by various coefficients relating to the structure, the contents, and the consequence of damage.

The tolerable lightning frequency is expressed by the following formula:

$$N_c = \frac{1.5 \times 10^{-3}}{C} \text{ events/yr}$$

where:
$C = (C_2)(C_3)(C_4)(C_5)$

The default value of tolerable frequency of property losses is $1.5 \times 10^{-3}$.

**L.5.1.2** The coefficient ($C$) is the product of structural coefficients $C_2$ through $C_5$. The structural coefficients are obtained from Table L.5.1.2(a) through Table L.5.1.2(d).

**L.5.2 Risk Calculation.**

**L.5.2.1** The tolerable lightning frequency ($N_c$) is compared with the annual threat occurrence ($N_d$). The result of this comparison is used to decide if a lightning protection system is needed. If $N_d \le N_c$, a lightning protection system can be optional. If $N_d > N_c$, it is recommended that a lightning protection system be installed.

**Table L.5.1.2(a) Determination of Construction Coefficient, $C_2$**

| | Construction Coefficient—$C_2$ | | |
|---|---|---|---|
| Structure | Metal Roof | Nonmetallic Roof | Combustible Roof |
| Metal | 0.5 | 1.0 | 2.0 |
| Nonmetallic | 1.0 | 1.0 | 2.5 |
| Combustible | 2.0 | 2.5 | 3.0 |

**Table L.5.1.2(b) Determination of Structure Contents Coefficient, $C_3$**

| Structure Contents | $C_3$ |
|---|---|
| Low value and noncombustible | 0.5 |
| Standard value and noncombustible | 1.0 |
| High value, moderate combustibility | 2.0 |
| Exceptional value, flammable liquids, computer or electronics | 3.0 |
| Exceptional value, irreplaceable cultural items | 4.0 |

**Table L.5.1.2(c) Determination of Structure Occupancy Coefficient, $C_4$**

| Structure Occupancy | $C_4$ |
|---|---|
| Unoccupied | 0.5 |
| Normally occupied | 1.0 |
| Difficult to evacuate or risk of panic | 3.0 |

**Table L.5.1.2(d) Determination of Lightning Consequence Coefficient, $C_5$**

| Lightning Consequence | $C_5$ |
|---|---|
| Continuity of facility services not required, no environmental impact | 1.0 |
| Continuity of facility services required, no environmental impact | 5.0 |
| Consequences to the environment | 10.0 |

**L.5.2.2** Table L.5.2.2 provides a simple method of calculating and using the assessment methods described in Section L.5.

**Table L.5.2.2 Simplified Risk Calculation**

| Data Input Equations | Computation | Result |
|---|---|---|
| Equivalent collection area:<br>$A_e = LW + 6H(L + W) + \pi 9H^2$* | $L =$<br>$W =$<br>$H =$<br>$H^2 =$ | $A_e =$ |
| Expected annual threat occurrence:<br>$N_d = (N_g)(A_e)(C_1)(10^{-6})$ | $N_g =$<br>$A_e =$<br>$C_1 =$ | $N_d =$ |
| Tolerable lightning frequency to the structure:<br>$N_c = (1.5 \times 10^{-3})/C$,<br>where $C = (C_2)(C_3)(C_4)(C_5)$<br>If $N_d \le N_c$, an LPS could be optional.<br>If $N_d > N_c$, an LPS is recommended. | $C_2 =$<br>$C_3 =$<br>$C_4 =$<br>$C_5 =$<br>$C =$ | $N_c =$ |

*Use the appropriate collection area calculation as defined in L.4.1.1.

**L.6 Detailed Risk Assessment.**

**L.6.1 Introduction.** The methodology described in this section involves the comparison of the calculated risk of loss due to lightning with the tolerable level of risk. The procedure involves the comparison of the estimated risk to the tolerable or acceptable risk to a structure. These assessments will determine the risk of lightning discharges causing a loss of life or injury, a loss of historical significance, loss of service(s), and probable economic losses. Providing these risk factors will allow a facility owner or manager to make an informed decision as to the benefits of providing lightning protection for the structure based on a more diverse set of factors.

**L.6.2 Values of Tolerable Risk ($R_T$).** Values of tolerable levels of loss could be selected by the owner, the owner's representative, or the authority having jurisdiction. Default values that can be used where risk levels are not provided by other sources are given in Table L.6.2.

**L.6.3 Types of Risk Due to Lightning.** The types of risk due to lightning for a particular structure or facility could include one or more of the following:

(1) $R_1$ risk associated with loss of life or injury
(2) $R_2$ risk associated with loss of service
(3) $R_3$ risk associated with loss of historical significance
(4) $R_4$ risk associated with loss of economic value

Copyright 2014 National Fire Protection Association (NFPA). Licensed, by agreement, for individual use and download on October 4, 2014 to LEADER and READER for designated user PATTARAPORN SRITRAKOOL. No other reproduction or transmission in any form permitted without written permission of NFPA. For inquires or to report unauthorized use, contact licensing@nfpa.org.



**Table L.6.2 Typical Values of Tolerable Lightning Risk**

| Type of Loss | $R_T$/year |
|---|---|
| Loss of life or injury | $10^{-6}$ |
| Loss of service | $10^{-3}$ |
| Loss of historical significance | $10^{-3}$ |

These risk categories are composed of risk components that are summed to determine the overall risk of the loss in a given application. The risk components are characterized according to the type of loss and source of the threat. Threats to be considered in the assessment are associated with:

(1) Strikes to the structure
(2) Strikes to an incoming service to a structure
(3) Strikes near a service
(4) Strikes near a structure

**L.6.4 Risk Components.** Relevant risk components to be considered in the assessment of the risk of the losses in L.6.3 are identified in L.6.4.1 through L.6.4.4. They are categorized according to the cause of the damage.

**L.6.4.1 Direct Strikes to a Structure.** $R_A$ indicates injuries caused by strikes to a structure (touch and step potentials). $R_B$ indicates damage to a structure due to a direct strike. $R_C$ indicates failure of internal systems due to a strike to a structure.

**L.6.4.2 Strikes near a Structure.** $R_M$ indicates failure of internal systems due to a strike near a structure.

**L.6.4.3 Strike to a Service Connected to a Structure.** $R_U$ indicates injury due to strikes to a service connected to the structure. $R_V$ indicates damage to a structure due to strikes to a service connected to the structure. $R_W$ indicates failure of internal systems or equipment due to a strike to a service connected to the structure.

**L.6.4.4 Strikes near a Service Connected to the Structure.** $R_Z$ indicates failure of internal systems or equipment due to strikes near a service connected to the structure.

**L.6.5 Procedure for Risk Assessment and Management.** The procedure for the risk assessment is to first define the extent of the facility or structure being assessed. The structure or facility will be stand-alone in most cases. The structure could also encompass a building and its associated outbuildings or equipment support structures. One must then determine all relevant physical, environmental, and service installation factors applicable to the structure.

The second step is to identify all the types of loss relevant to the structure or facility. For each type of loss relevant to the structure, the relevant loss factors should be chosen.

Next, the risk for each relevant type of loss for the structure should be determined by identifying the components ($R_x$) that make up the risk, calculate the identified components of risk, and add these to calculate the total risk due to lightning ($R$) using the following relationships:

$$R = R_1 + R_2 + R_3 + R_4$$
$$R_1 = R_A + R_B + R_C{}^{*} + R_M{}^{*}, + R_U + R_V + R_W{}^{*} + R_Z{}^{*}$$
$$R_2 = R_B + R_C + R_M + R_V + R_W + R_Z$$
$$R_3 = R_B + R_V$$
$$R_4 = R_A{}^{**} + R_B + R_C + R_M + R_U{}^{**} + R_V + R_W + R_Z$$

*$R_C$, $R_M$, $R_W$, and $R_Z$ in $R_1$ are applicable only for structures with risk of explosion, for structures with life-critical electrical equipment (such as hospitals), or other structures where the failure of internal systems immediately endangers human life.

**$R_A$ and $R_U$ in $R_4$ are applicable only for structures where animals might be injured.

Risk factors are defined in L.6.6

Compare the total risk ($R$) with the maximum tolerable risk ($R_T$) for each type of loss relevant to the structure. If $R < R_T$ for each type of loss relevant to the structure, then lightning protection might not be needed.

**L.6.6 Calculation of Risk.** Each component of risk, $R_x$, depends on the average annual threat of occurrence, $N_x$ (strikes in the area of interest), the probability of damage, $P_x$ (or step and touch voltages to humans), and the expected loss related to the event, $L_x$. The value of each component of risk, $R_x$, can be calculated using the following expression:

$$R_x = N_x P_x L_x$$

where:
$N_x$ = number of lightning strikes affecting the structure or service
$P_x$ = probability of damage
$L_x$ = loss factor

Specific formulas for the calculation of the risk components identified in L.6.4 are given in Table L.6.6.

**Table L.6.6 Risk Components Formulas**

| Risk Component | Descriptor |
|---|---|
| $R_A = N_d P_A L_A$ | Risk of injury due to direct strike to structure |
| $R_B = N_d P_B L_B$ | Risk of physical damage to structure due to a direct strike to the structure |
| $R_C = N_d P_C L_C$ | Risk of failure of internal systems due to direct strike to structure |
| $R_M = N_M P_M L_M$ | Risk of failure of internal systems due to strike near structure |
| $R_U = (N_L + N_{da}) P_U L_U$ | Risk of injury due to strike to incoming service |
| $R_V = (N_L + N_{da}) P_V L_V$ | Risk of physical damage due to direct strike to incoming service |
| $R_W = (N_L + N_{da}) P_W L_W$ | Risk of failure of internal systems due to direct strike to incoming service |
| $R_Z = (N_\Gamma - N_L) P_Z L_Z$ | Risk of failure of internal systems due to strike near incoming service |

**L.6.6.1 Annual Threat of Occurrence.**

**L.6.6.1.1** The calculation of the annual threat of occurrence resulting from a direct strike to a structure ($N_d$) is calculated as per Section L.3.

**L.6.6.1.2** The annual threat of occurrence due to strikes near a structure ($N_M$) is given by the following equation:

$$N_M = N_g (A_m - A_e)(C_1) 10^{-6} \text{ events/yr}$$

where:
$N_g$ = lightning ground flash density in flashes/km$^2$/year *(see Section L.2)*
$A_m$ = collection area of flashes near the structure (m$^2$)
$A_e$ = equivalent collection area of the structure (m$^2$) *(see Section L.4)*
$C_1$ = environmental coefficient *(see Table L.4.2)*

Copyright 2014 National Fire Protection Association (NFPA). Licensed, by agreement, for individual use and download on October 4, 2014 to LEADER and READER for designated user PATTARAPORN SRITRAKOOL. No other reproduction or transmission in any form permitted without written permission of NFPA. For inquires or to report unauthorized use, contact licensing@nfpa.org.



The collection area ($A_m$) for flashes near the structure includes the area extending a distance of 250 m (820 ft) around the perimeter of the structure. For cases where $N_M$ is negative, a value of 0 is assigned to $N_M$.

**L.6.6.1.3** The annual threat of occurrence due to a strike to an incoming service ($N_L$) is characterized by the following formula:

$$N_L = N_g A_l C_1 C_t 10^{-6} \text{events/yr}$$

where:
$N_g$ = lightning ground flash density in flashes/km$^2$/year *(see Section L.2)*
$A_l$ = collection area of flashes striking the service (m$^2$) *(see Table L.6.7.1)*
$C_1$ = environmental coefficient of the incoming service (same as for structures per *Table L.4.2*)
$C_t$ = correction factor for the presence of an HV/LV transformer located between the point of strike and the structure

Where the value of $l_c$ (used in the determination of $A_l$) is not known, a value of 1 km is assumed for the assessment. A default value of 500 Ωm can be used for soil resistivity (ρ) where this value cannot be determined.

If the installation incorporates underground cables run underneath a ground mesh, $A_l$ could be assumed to be 0 for that cable set ($N_L = 0$).

$C_t$ applies to line sections between the transformer and the structure. A value of 0.2 is applicable for installations having a transformer located between the strike and the structure. Otherwise, a value of 1 is assigned to this variable.

**L.6.6.1.4** The annual threat of occurrence due to flashes to an adjacent structure ($N_{da}$) can be estimated by using the following equation:

$$N_{da} = N_g A_e C_1 C_t 10^{-6} \text{events/yr}$$

where:
$N_g$ = lightning ground flash density in flashes/km$^2$/year *(see Section L.2)*
$A_e$ = equivalent collection area of the adjacent structure *(see Section L.4)*
$C_1$ = environmental coefficient *(see Table L.4.2)*
$C_t$ = correction factor for the presence of an HV/LV transformer located between the point of strike and the structure

$C_t$ applies to line sections between the transformer and the structure. A value of 0.2 is applicable for installations having a transformer located between the strike and the structure. Otherwise, a value of 1 is assigned to this variable.

**L.6.6.1.5** The annual threat of occurrence due to flashes near a service ($N_I$) can be estimated by using the following equation:

$$N_I = N_g A_i C_e C_t 10^{-6} \text{events/yr}$$

where:
$N_g$ = lightning ground flash density in flashes/km$^2$/year *(see Section L.2)*
$A_i$ = equivalent collection area of flashes to ground near the service (m$^2$) *(see Table L.6.7.1)*
$C_e$ = service environmental coefficient *(see Table L.6.7.2)*
$C_t$ = correction factor for the presence of an HV/LV transformer located between the point of strike and the structure

The collection area of the service ($A_i$) is related to the length $l_c$ *(see Table L.6.7.1)* at which a flash near the service could cause induced overvoltages not lower than 1.5 kV.

**L.6.6.2 Probabilities of Damage.**

**L.6.6.2.1** The factors associated with the probability of injury ($P_A$) due to a direct strike to a structure are primarily related to touch and step potentials. Default values for ($P_A$) are given in Table L.6.7.3.

**L.6.6.2.2** The factors associated with the probability of physical damage ($P_B$) due to a direct strike to a structure are primarily related to the type of protection provided. Default values for ($P_B$) are given in Table L.6.7.4.

**L.6.6.2.3** The factors associated with the probability of failure of internal systems due to a direct strike ($P_C$) are primarily related to the surge protection measures provided. Default values for $P_C$ are given in Table L.6.7.5. SPD protection is effective to reduce $P_C$ only in structures protected by a lightning protection system or in structures with a continuous metal or reinforced concrete frame.

**L.6.6.2.4** The probability that a strike near a structure will cause failure of internal systems ($P_M$) depends on the lightning protection measures implemented. These measures are characterized by a factor, $K_S$, that takes into consideration protective measures such as the shielding effectiveness of the structure, any internal shielding provided, characteristics of internal wiring, and the withstand voltage of the system to be protected. Where SPDs are not installed at utilization equipment, or the SPDs at the utilization equipment are not properly coordinated with those installed at the service entrances, the value of $P_M$ to be used in the equation for the risk of failure of internal systems due to a strike near a structure ($P_M$) can be taken from Table L.6.7.6. Where coordinated SPDs are installed at the utilization equipment, the value of $P_M$ used in the computation of $P_M$ is the lower value between $P_C$ and $P_M$. For internal systems with equipment having withstand voltage levels that are unknown or are less than 1.5 kV, a value of $P_M$ = 1 should be used in the assessment.

The value of $K_S$ is calculated using the following equation:

$$K_S = (K_{S1})(K_{S2})(K_{S3})(K_{S4})$$

where:
$K_{S1}$ = factor relating to the shielding effectiveness of the structure, lightning protection system, or other shields at the exterior boundary of the structure
$K_{S2}$ = factor relating to the shielding effectiveness of shields internal to the structure
$K_{S3}$ = factor relating to the characteristics of the internal wiring
$K_{S4}$ = factor relating to the withstand voltage of the system to be protected

For continuous metal shields with a thickness of 0.1 to 0.5 mm, $K_{S1}$ and $K_{S2}$ should be assigned the value of $10^{-4}$ to $10^{-5}$ (scaled linearly). Where not otherwise known, the value of $K_{S1}$ and $K_{S2}$ can be evaluated by the following relationship as long as the equipment is located a distance, $w$, from the boundary shield:

$$K_{S1} = K_{S2} = 0.12w$$

where:
$w$ = distance measured in meters and given by a mesh grid spacing, the spacing between down conductors, or the spacing between structural steel columns.

Copyright 2014 National Fire Protection Association (NFPA). Licensed, by agreement, for individual use and download on October 4, 2014 to LEADER and READER for designated user PATTARAPORN SRITRAKOOL. No other reproduction or transmission in any form permitted without written permission of NFPA. For inquires or to report unauthorized use, contact licensing@nfpa.org.



In those structures where it is ensured that steel reinforcing bars are interconnected and terminated by approved grounding electrodes, $w$ is the spacing between the reinforcing bars.

If the equipment is located closer to the applicable boundary than the distance, $w$, the values of $K_{S1}$ and $K_{S2}$ should be doubled. In those cases where multiple internal boundaries exist, the resulting value of $K_{S2}$ is the product of each individual value of $K_{S2}$.

Table L.6.7.7 provides values that can be selected for factor $K_{S3}$ based on the configuration of internal wiring. For wiring contained in continuous metallic conduit that is properly bonded to the lightning protection grounding system, the selected value of $K_{S3}$ from the table is multiplied by a factor of 0.1.

The value of factor $K_{S4}$ is evaluated by the following formula:

$$K_{S4} = 1.5 / U_W$$

where:
$U_W$ = lowest withstand voltage of the hardware in the system under consideration

**L.6.6.2.5** The probability, $P_U$, that a lightning flash will result in injury to living beings due to touch voltage by a flash to a service entering the structure depends on the characteristics of the service shield, the impulse withstand voltage of internal systems connected to the service, typical protection measures (physical restrictions, warning notices), and SPDs provided at the entrance of the service. Where SPDs are not provided for equipotential bonding, $P_U$ is characterized by the probability of failure of internal systems due to a flash to the connected service, as shown in Table L.6.7.8. Where SPDs are provided for equipotential bonding, the value of $P_U$ to be used in the equation for the risk of injury to humans due to flashes to a service is the lower value between $P_C$ and $P_U$. For unshielded services, a value of $P_U = 1$ is used. Where physical restrictions, warning notices, and so forth, are used, the value of $P_U$ can be further reduced by multiplying it by $P_A$.

**L.6.6.2.6** The probability of physical damage due to a strike to a service entering a structure ($P_V$) depends on the service line shielding characteristics, the impulse withstand voltage of internal systems connected to the service, and any SPDs provided. Where SPDs are not provided, the value of $P_V$ is equal to the value of $P_U$. Where SPDs are provided, the value of $P_V$ to be used in the equation for the risk of physical damage due to a strike to a service is the lower value between $P_C$ and $P_U$.

**L.6.6.2.7** The probability of a failure of internal systems due to a strike to a service entering a structure ($P_W$) depends on the service line shielding characteristics, the impulse withstand voltage of internal systems connected to the service, and any SPDs provided. Where SPDs are installed, the value of $P_W$ is the lower value of $P_C$ or $P_U$. Where SPDs are not installed, the value of $P_W$ to be used in the equation for the risk of failure of internal systems due to a strike to a service is equivalent to the value of $P_U$.

**L.6.6.2.8** The probability of a failure of internal systems due to a strike near a service entering the structure under consideration ($P_Z$) depends on the service line shielding characteristics, the impulse withstand voltage of internal systems connected to the service, and the protection measures provided. Where SPDs are not installed, the probability of failure of internal systems due to a flash near the connected service ($P_Z$) can be taken from Table L.6.7.9. Where SPDs are installed, the value of $P_Z$ can be taken to be the lower value of $P_C$ or $P_Z$.

**L.6.6.3 Loss Factors.** The value of $L_t$, $L_f$, and $L_o$ can be determined in terms of the relative number of victims from the following approximate relationship:

$$L_A = \left(n_p / n_t\right) \times \left(t_p / 8760\right)$$

where:
$L_A$ = value for loss of human life
$n_p$ = number of possible endangered persons (victims)
$n_t$ = expected total number of persons (in the structure)
$t_p$ = time in hours per year for which the persons are present in a dangerous place, outside of the structure ($L_t$ only) or inside the structure ($L_t$, $L_f$, and $L_o$)

Typical mean values of $L_t$, $L_f$, and $L_o$, for use when the determination of $n_p$, $n_t$, and $t_p$ is uncertain or difficult, are given in Table L.6.7.10.

**L.6.6.3.1 Injury to Humans.** The following equation calculates the value of injury to humans:

$$L_A = L_U = r_a \times L_t$$

where:
$L_A$ = value for loss of human life
$L_U$ = value of loss of living being
$r_a$ = reduction factor for type of surface soil or floor *(see Table L.6.7.11)*
$L_t$ = mean value of loss of life *(see Table L.6.7.10)*

**L.6.6.3.2 Physical Damage.** The following equation calculates the value of loss from physical damage to the structure:

$$L_B = L_V = r_p \times r_f \times h_Z \times L_f$$

where:
$L_B$ = value of loss due to direct strike to the structure
$L_V$ = value of loss due to strike to incoming service
$r_p$ = reduction factor for provisions taken to reduce consequences of fire *(see Table L.6.7.12)*
$r_f$ = reduction factor for risk of fire to structure *(see Table L.6.7.13)*
$h_Z$ = factor for the kinds of hazard in the structure *(see Table L.6.7.14)*
$L_f$ = mean value of physical damage loss *(see Table L.6.7.10)*

**L.6.6.3.3 Failure of Internal Systems.** The following equation calculates the value of loss due to failure of internal systems:

$$L_C = L_M = L_W = L_Z = L_O$$

where:
$L_C$ = value of loss due to direct strike to the structure
$L_M$ = value of loss due to a strike near the structure
$L_W$ = value of loss due to a strike to a service connected to the structure
$L_Z$ = value of loss due to a strike near a service connected to the structure
$L_O$ = mean value of loss of internal system *(see Table L.6.7.10)*

**L.6.7 Applicable Tables.**

**L.6.7.1** Table L.6.7.1 provides formulas for determining the collection areas of $A_l$ and $A_i$.

Copyright 2014 National Fire Protection Association (NFPA). Licensed, by agreement, for individual use and download on October 4, 2014 to LEADER and READER for designated user PATTARAPORN SRITRAKOOL. No other reproduction or transmission in any form permitted without written permission of NFPA. For inquires or to report unauthorized use, contact licensing@nfpa.org.



**Table L.6.7.1 Values of Collection Areas, $A_l$ and $A_i$**

| Collection Area | Aerial | Buried |
|---|---|---|
| $A_l$ | $6\ H_c[l_c - 3(H_a + H_b)]$ | $[l_c - 3(H_a + H_b)]\ \sqrt{\rho}$ |
| $A_i$ | $1000\ l_c$ | $25\ l_c\ \sqrt{\rho}$ |

$A_l$ = collection area of flashes striking incoming service ($m^2$)
$A_i$ = collection area of flashes to ground near incoming service ($m^2$)
$H_c$ = height of incoming service conductors above ground (m)
$l_c$ = length of incoming service section from structure to first point of transition (m) (a maximum value of $l_c$ of 1 km should be used)
$H_a$ = height of structure connected at end "a" of incoming service (m)
$H_b$ = height of structure connected at end "b" of incoming service (m)
$\rho$ = resistivity of soil where service is buried (m) (a maximum value for $\rho$ is 500 Ω-m).

**L.6.7.2** Table L.6.7.2 provides values for the service environmental coefficient ($C_e$).

**Table L.6.7.2 Service Environmental Coefficient, $C_e$**

| Service Environment | $C_e$ |
|---|---|
| Urban with buildings exceeding 20 m high | 0.01 |
| Urban — population greater than 50,000 | 0.1 |
| Suburban — residential on outskirts of cities | 0.5 |
| Rural — settled areas outside of towns and cities | 1 |

**L.6.7.3** Table L.6.7.3 provides values for the probability $P_A$ that a flash to a structure will cause shock to living beings due to dangerous touch and step voltages.

**Table L.6.7.3 Values of Probability ($P_A$) That a Flash to a Structure Will Cause Shock to Living Beings Due to Dangerous Touch and Step Voltages**

| Protection Measure | $P_A$ |
|---|---|
| No protection measures | 1 |
| Warning notices | 0.1 |
| Electrical insulation/isolation of exposed down conductor | 0.01 |
| Effective soil equipotentialization | 0.01 |
| Structural steel frame is used as the down conductor system | $10^{-6}$ |

Note: If more than one protection measure is taken, the resulting value of $P_A$ is the product of the applicable $P_A$ values.

**L.6.7.4** Table L.6.7.4 provides values for the probability $P_B$ of physical damage to a structure due to direct flashes to the structure.

**L.6.7.5** Table L.6.7.5 provides values for the probability $P_C$ of failure of internal systems as a function SPD protection.

**Table L.6.7.4 Values of Probability ($P_B$) of Physical Damage to a Structure Due to Flashes to the Structure**

| Type of Protection Provided | $P_B$ |
|---|---|
| No protection provided | 1 |
| LPS based on 46 m (150 ft) striking distance | 0.1 |
| LPS based on 30 m (100 ft) striking distance | 0.05 |
| Structure with a metal roof meeting the requirements of 4.6.1.4, and continuous metal or reinforced concrete frame serving as a natural down conductor system with bonding and grounding in accordance with NFPA 780 | 0.001 |

Note: Values other than those given in this table can be used when justified by a detailed analysis of the protection provided.

**Table L.6.7.5 Values of Probability ($P_C$) as a Function of SPD Protection Provided**

| SPD Protection Provided | $P_C$ |
|---|---|
| No SPD protection | 1 |
| SPDs provided in accordance with Section 4.20 | 0.03 |

Notes:
(1) SPD protection is effective to reduce $P_C$ only in structures protected by an LPS or in structures with a continuous metal or reinforced concrete frame where bonding and grounding requirements of Section 4.20 are met.
(2) Shielded internal systems fed by wiring in lightning protective cable ducts or metallic conduits can be used in lieu of SPD protection.
(3) Smaller values of $P_C$ can be used where SPDs above and beyond those required by Section 4.20 and SPDs having better protection characteristics (higher current withstand capability, lower protective level, etc.) than the minimum specified in Section 4.20. See IEC 62305-2, *Protection Against Lightning*, Annex B, for additional information.

**L.6.7.6** Table L.6.7.6 provides values for the probability $P_M$ of failure of internal systems as a function of $K_S$.

**Table L.6.7.6 Values of Probability ($P_M$) as a Function of $K_S$**

| $K_S$ | $P_M$ |
|---|---|
| >0.4 | 1 |
| 0.15 | 0.9 |
| 0.07 | 0.5 |
| 0.035 | 0.1 |
| 0.021 | 0.01 |
| 0.016 | 0.005 |
| 0.015 | 0.003 |
| 0.014 | 0.001 |
| <0.013 | 0.0001 |

**L.6.7.7** Table L.6.7.7 provides values of $K_{S3}$ as a function of the type of internal wiring.

**L.6.7.8** Table L.6.7.8 provides values of the probability $P_U$ of failure of internal systems due to a strike to a service connected to a structure. $P_U$ is a function of the resistance of the

Copyright 2014 National Fire Protection Association (NFPA). Licensed, by agreement, for individual use and download on October 4, 2014 to LEADER and READER for designated user PATTARAPORN SRITRAKOOL. No other reproduction or transmission in any form permitted without written permission of NFPA. For inquires or to report unauthorized use, contact licensing@nfpa.org.



**Table L.6.7.7 Values of Factor ($K_{S3}$) as a Function of Internal Wiring**

| Type of Internal Wiring | $K_{S3}$ |
|---|---|
| Unshielded cable — no routing precaution to avoid loops | 1 |
| Unshielded cable — routing precaution to avoid large loops | 0.2 |
| Unshielded cable — routing precaution to avoid loops up to 10 $m^2$ | 0.02 |
| Shielded cable with shield resistance of $20 > R_S > 5$ Ω/km | 0.001 |
| Shielded cable with shield resistance of $5 > R_S > 1$ Ω/km | 0.0002 |
| Shielded cable with shield resistance of $1 > R_S$ Ω/km | 0.0001 |

Note: Shielded cable includes those conductors installed within a metallic raceway.

**Table L.6.7.9 Values of the Probability ($P_Z$) as a Function of the Resistance of the Cable Shield and the Impulse Withstand Voltage ($U_w$) of the Equipment**

| | Withstand Voltage $U_w$ (kV) | | | | |
|---|---|---|---|---|---|
| **Line Type** | **1** | **1.5** | **2.5** | **4** | **6** |
| Power lines | 1 | 0.6 | 0.3 | 0.16 | 0.1 |
| Telecom lines | 1 | 0.5 | 0.2 | 0.08 | 0.04 |

Note: Values for $U_w$ can be obtained from manufacturers and equipment suppliers. If the actual values are not readily available from other sources the following typical values can be utilized:
For structures containing computer equipment: $U_w = 1.5$ kV
For a typical residential structure: $U_w = 2.5$ kV
For a typical business, hotel, hospital, etc., structure: $U_w = 2.5$ kV
For a typical light industrial structure: $U_w = 4.0$ kV
For a typical heavy industrial structure: $U_w = 6.0$ kV
Default value: $U_w = 1.5$ kV

cable shield and the impulse withstand voltage ($U_w$) of the equipment.

**L.6.7.9** Table L.6.7.9 provides values of probability $P_Z$ of failure of internal systems due to a strike near a service to a structure. $P_Z$ is a function of the resistance of the cable shield and the impulse withstand voltage ($U_w$) of the equipment.

**L.6.7.10** Table L.6.7.10 provides typical mean values for loss of life, physical damage to a structure, or failure of an internal system from a strike to or near a structure.

**L.6.7.11** Table L.6.7.11 provides values of the reduction factor $r_a$ as a function of the type of surface soil or floor.

**L.6.7.12** Table L.6.7.12 provides values of the reduction factor $r_p$ as a function of provisions taken to reduce the consequences of fire.

**L.6.7.13** Table L.6.7.13 provides values of the reduction factor $r_f$ as a function of risk of fire for the structure.

**L.6.7.14** Table L.6.7.14 provides values for the hazard factor $h_z$ of a structure.

**L.6.8** Figure L.6.8 provides a worksheet for detailed risk assessment.

**Table L.6.7.8 Values of the Probability ($P_U$) as a Function of the Resistance of the Cable Shield and the Impulse Withstand Voltage ($U_w$) of the Equipment**

| | | | Withstand Voltage $U_w$ (kV) | | | | |
|---|---|---|---|---|---|---|---|
| **Line Type** | **Routing, Shielding, and Bonding Conditions** | | **1** | **1.5** | **2.5** | **4** | **6** |
| Power lines or telecom lines | Aerial or buried line, unshielded, or shielded, whose shield is not bonded to the same bonding bar as equipment | | 1 | 1 | 1 | 1 | 1 |
| | Shielded aerial or buried line whose shield is bonded to the same bonding bar as equipment | 5 Ω/km < $R_S$ < 20 Ω/km | 1 | 1 | 0.95 | 0.9 | 0.8 |
| | | 1 Ω/km < $R_S$ < 5 Ω/km | 0.9 | 0.8 | 0.6 | 0.3 | 0.1 |
| | | $R_S \leq 1$ Ω/km | 0.6 | 0.4 | 0.2 | 0.04 | 0.02 |

Notes:
(1) $R_S$ is the resistance of the cable shield, which can be obtained from the cable manufacturer.
(2) In suburban/urban areas, an LV power line uses typically unshielded buried cable, whereas a telecommunication line uses a buried shielded cable with a shield resistance of 5 Ω/km. In rural areas, an LV power line uses an unshielded aerial cable, whereas a telecommunication line uses an aerial unshielded cable. An HV buried power line typically uses a shielded cable with a shield resistance in the order of 1 Ω/km to 5 Ω/km.
(3) Values for $U_w$ can be obtained from manufacturers and equipment suppliers. If the actual values are not readily available from other sources, the following typical values can be utilized:
(a) For structures containing computer equipment: $U_w = 1.5$ kV
(b) For a typical residential structure: $U_w = 2.5$ kV
(c) For a typical business, hotel, hospital, etc., structure: $U_w = 2.5$ kV
(d) For a typical light industrial structure: $U_w = 4.0$ kV
(e) For a typical heavy industrial structure: $U_w = 6.0$ kV
(f) Default value: $U_w = 1.5$ kV

Copyright 2014 National Fire Protection Association (NFPA). Licensed, by agreement, for individual use and download on October 4, 2014 to LEADER and READER for designated user PATTARAPORN SRITRAKOOL. No other reproduction or transmission in any form permitted without written permission of NFPA. For inquires or to report unauthorized use, contact licensing@nfpa.org.



**Table L.6.7.10 Typical Mean Values of Losses**

| Type of Structure | Loss of Life ($L_t$) | Physical Damage ($L_f$) | Failure of Systems ($L_O$) |
|---|---|---|---|
| All types: persons inside building | $10^{-5}$ | | |
| All types: persons outside building | $10^{-3}$ | | |
| Hospitals | | $10^{-1}$ | $10^{-3}$ |
| Hotels, civil buildings | | $10^{-1}$ | $10^{-6}$ |
| Industrial, commercial, school | | $5 \times 10^{-2}$ | $10^{-6}$ |
| Public entertainment, churches, museums | | $2 \times 10^{-2}$ | $10^{-6}$ |
| Others | | $10^{-2}$ | $10^{-6}$ |
| Risk of explosion | | | $10^{-1}$ |

**Table L.6.7.11 Values of Reduction Factor ($r_a$) as a Function of the Type of Surface of Soil or Floor**

| Type of Surface | Contact Resistance (kΩ*) | $r_a$ |
|---|---|---|
| Soil, concrete | < 1 | $10^{-2}$ |
| Marble, ceramic | 1–10 | $10^{-3}$ |
| Gravel, carpets | 10–100 | $10^{-4}$ |
| Asphalt, linoleum, wood | > 100 | $10^{-5}$ |

*Values measured between a 4000 $mm^2$ electrode compressed with force of 500 N at a point of infinity.

**Table L.6.7.12 Values of Reduction Factor ($r_p$) as a Function of Provisions Taken to Reduce the Consequences of Fire**

| Provisions | $r_p$ |
|---|---|
| No provisions or structure contains risk of explosion | 1 |
| Fixed manually operated extinguishing installations, manual alarm installations, hydrants, fireproof compartments, and/or protected escape routes | 0.5 |
| Protected against overvoltages and other damages, or fire fighters can arrive in less than 10 minutes, or fixed automatically operated extinguishing installations or automatic alarm installed | 0.2 |

Note: If more than one provision has been taken, the value of $r_p$ is the lowest of the relevant values.

**Table L.6.7.13 Values of Reduction Factor ($r_f$) as a Function of Risk of Fire of a Structure**

| Risk of Fire | $r_f$ |
|---|---|
| Explosion[a] | 1 |
| High[b] | 0.1 |
| Ordinary[c] | 0.01 |
| Low[d] | 0.001 |
| None[e] | 0 |

[a]Structures with risk of explosion or structures that contain explosive mixtures of gases, dusts, or materials.

[b]Structures with significant quantities of combustible materials and/or storage of significant quantities of flammable and combustible liquids (e.g., large warehouses, shipping terminals, big box stores, industrial facilities with flammable and combustible processes, printing, saw mills, plastics processing, paint dipping and spraying).

[c]Structures with moderate quantities of combustible materials with minor storage areas that produce significant amounts of smoke, but no flammable or combustible liquids (e.g., small warehouses, mercantile, post offices, electronic plants, ordinary chemical plants, restaurant service areas, wood product assembly).

[d]Structures with limited quantities of combustible materials and generally noncombustible construction (e.g., residences, churches, educational buildings, institutional, museums, offices, theaters).

[e]Noncombustible construction with no exposed combustible contents.

**Table L.6.7.14 Values of Hazard Factor ($h_Z$)**

| Kind of Hazard | $h_Z$ |
|---|---|
| No special hazard | 1 |
| Low level of panic (e.g., structures limited to two floors and the number of people not greater than 100) | 2 |
| Average level of panic (e.g., structures designed for cultural or sporting events with a number of people between 100 and 1000) | 5 |
| Difficulty of evacuation (e.g., structures with immobilized people, such as hospitals) | 5 |
| High level of panic (e.g., structures designed for cultural or sporting events with the number of people greater than 1000) | 10 |
| Hazard to surrounding area or environment | 20 |
| Contamination of surrounding area or environment | 50 |

Copyright 2014 National Fire Protection Association (NFPA). Licensed, by agreement, for individual use and download on October 4, 2014 to LEADER and READER for designated user PATTARAPORN SRITRAKOOL. No other reproduction or transmission in any form permitted without written permission of NFPA. For inquires or to report unauthorized use, contact licensing@nfpa.org.



## DETAILED RISK ASSESSMENT WORKSHEET

### Equivalent Collective Area

| | | | | | |
|---|---|---|---|---|---|
| $A_e = LW+6H(L+W)+9\pi H^2$ | $L$ = | | $A_e$ = | | |
| (for rectangular structure) | $W$ = | | | | |
| (substitute formula for other structures) | $H$ = | | | | |

### Annual Threat of Occurence

**Direct Strikes to Structure**

| | | | | | |
|---|---|---|---|---|---|
| | $N_g$ = | | | | |
| $N_d = (N_g)(A_e)(C_1)(10^{-6})$ | $A_e$ = | | $N_d$ = | | |
| See Table L.4.2. | $C_1$ = | | | | |

**Strikes Near Structure**

| | | | | | |
|---|---|---|---|---|---|
| $N_M = (N_g)(A_m - A_e)(C_1)(10^{-6})$ | $N_g$ = | | $N_M$ = | | |
| | $A_m$ = | | | | |
| | $A_e$ = | | | | |
| See Table L.4.2. | $C_1$ = | | | | |

**Strikes to an Incoming Service**

| | | | | | |
|---|---|---|---|---|---|
| $N_L = (N_g)(A_1)(C_1)(C_t)(10^{-6})$ | $N_g$ = | | $N_L$ = | | |
| See Table L.6.7.1. | $A_1$ = | | | | |
| See Table L.4.2. | $C_1$ = | | | | |
| Without transformer = 1.0<br>With transformer = 0.2 | $C_t$ = | | | | |

**Strikes to an Adjacent Structure**

| | | | | | |
|---|---|---|---|---|---|
| | $N_g$ = | | | | |
| $N_{da} = (N_g)(A_e)(C_1)(C_t)(10^{-6})$ | $A_e$ = | | $N_{da}$ = | | |
| See Table L.4.2. | $C_1$ = | | | | |
| Without transformer = 1.0<br>With transformer = 0.2 | $C_t$ = | | | | |

**Strikes Near an Incoming Service**

| | | | | | |
|---|---|---|---|---|---|
| $N_I = (N_g)(A_i)(C_e)(C_t)(10^{-6})$ | $N_g$ = | | $N_I$ = | | |
| See Table L.6.7.1. | $A_i$ = | | | | |
| See Table L.6.7.2. | $C_e$ = | | | | |
| Without transformer = 1.0<br>With transformer = 0.2 | $C_t$ = | | | | Transformer between strike and structure |

### Probability of Damage

**Injury Due to a Direct Strike – $P_A$**

| | | | | | |
|---|---|---|---|---|---|
| See Table L.6.7.3. | | | $P_A$ = | | |

**Physical Damage Due to a Direct Strike – $P_B$**

| | | | | | |
|---|---|---|---|---|---|
| See Table L.6.7.4. | | | $P_B$ = | | |

**Failure of Internal Systems Due to a Direct Strike – $P_C$**

| | | | | | |
|---|---|---|---|---|---|
| See Table L.6.7.5. | | | $P_C$ = | | |

**Failure of Internal Systems Due to a Direct Strike – $P_M$**

| | | | | | |
|---|---|---|---|---|---|
| | | | $P_M$ = | | See Table L.6.7.6. |
| $K_S = (K_{S1})(K_{S2})(K_{S3})(K_{S4})$ | $K_{S1}$ = | | $K_S$ = | | |
| $K_{S1} = K_{S2} = 0.12w$ | $K_{S2}$ = | | | | |
| See Table L.6.7.7. | $K_{S3}$ = | | | | |
| $K_{S4} = 1.5/U_W$ | $K_{S4}$ = | | | | $U_W$ is the lowest withstand voltage of protected equipment. |
| Without coordinated surge protective devices – $P_M = 1.0$ | | | | | |

**Injury Due to Strike to Incoming Service – $P_U$**

| | | | | | |
|---|---|---|---|---|---|
| See Table L.6.7.8. | | | $P_U$ = | | |
| With SPDs installed; Use lowest value of $P_C$ or $P_U$ | | | | | |
| With unshielded service (no additional SPDs installed) | | | $P_U$ = | 1.00 | |

**Physical Damage from Strike to Incoming Service – $P_V$**

| | | | | | |
|---|---|---|---|---|---|
| With no SPDs installed – $P_V = P_U$ | | | $P_V$ = | | |
| With SPDs installed; Use lowest value of $P_C$ or $P_U$ | | | | | |

**Failure of Internal Systems from Strike to Incoming Service – $P_W$**

| | | | | | |
|---|---|---|---|---|---|
| With SPDs installed; Use lowest value of $P_C$ or $P_U$ | | | $P_W$ = | | |
| With no SPDs installed – $P_W = P_U$ | | | | | |

© 2013 National Fire Protection Association



**FIGURE L.6.8 Detailed Assessment Worksheet.**

Copyright 2014 National Fire Protection Association (NFPA). Licensed, by agreement, for individual use and download on October 4, 2014 to LEADER and READER for designated user PATTARAPORN SRITRAKOOL. No other reproduction or transmission in any form permitted without written permission of NFPA. For inquires or to report unauthorized use, contact licensing@nfpa.org.



## DETAILED RISK ASSESSMENT WORKSHEET *(continued)*

### Probability of Damage *(continued)*

**Failure of Internal Systems from Strike Near Incoming Service – $P_Z$**

| | | | | | |
|---|---|---|---|---|---|
| With SPDs installed; Use lowest value of $P_C$ or $P_Z$ | | | $P_Z$ = | | |
| With no SPDs installed – See Table L.6.7.9. | | | | | |

### Loss Factors

**Injury or Loss of Life – $L_A$**

| | | | | | |
|---|---|---|---|---|---|
| $L_A = (n_p/n_t)(t_p/8760)$ | | | $L_A$ = | | |
| $n_p$ = number of endangered persons | $n_p$ = | | | | |
| $n_t$ = expected total number of persons in facility | $n_t$ = | | | | |
| $t_p$ = time in hours per year when persons are in a dangerous place inside or outside the structure | $t_p$ = | | | | |
| Use $L_t$, $L_f$, or $L_O$ from Table L.6.7.10 when $n_p$, $n_t$, or $t_p$ is uncertain or difficult to determine. | | | | | |

**Injury to Humans – $L_A$ or $L_U$**

| | | | | | |
|---|---|---|---|---|---|
| $L_A = L_U = (r_a)(L_t)$ | $L_t$ = | | $L_A$ = | | |
| See Table L.6.7.11. | $r_a$ = | | | | |

**Physical Damage – $L_B$ or $L_V$**

| | | | | | |
|---|---|---|---|---|---|
| $L_B = L_V = (r_p)(r_f)(h_Z)(L_f)$ | | $L_B$ = | $L_V$ = | | |
| See Table L.6.7.10. | $L_f$ = | | | | |
| See Table L.6.7.12. | $r_p$ = | | | | |
| See Table L.6.7.13. | $r_f$ = | | | | |
| See Table L.6.7.14. | $h_Z$ = | | | | |

**Failure of Internal Systems – $L_O$**

| | | | | | |
|---|---|---|---|---|---|
| See Table L.6.7.10. | | | $L_O$ = | | |

### Risk Components

**Risk of Injury or Loss of Life from a Direct Strike to a Structure – $R_A$**

| | | | | | |
|---|---|---|---|---|---|
| | $N_d$ = | | | | |
| $R_A = (N_d)(P_A)(L_A)$ | $P_A$ = | | $R_A$ = | | |
| | $L_A$ = | | | | |

### Risk Components *(continued)*

**Risk of Physical Damage Due to a Direct Strike to Structure – $R_B$**

| | | | | | |
|---|---|---|---|---|---|
| | $N_d$ = | | | | |
| $R_B = (N_d)(P_B)(L_B)$ | $P_B$ = | | $R_B$ = | | |
| | $L_B$ = | | | | |

**Risk of Failure of Internal Systems from a Direct Strike to the Structure – $R_C$**

| | | | | | |
|---|---|---|---|---|---|
| | $N_d$ = | | | | |
| $R_C = (N_d)(P_C)(L_C)$ | $P_C$ = | | $R_C$ = | | |
| | $L_C$ = | | | | $L_C = L_O$ |

**Risk of Failure of Internal Systems from a Strike Near Structure – $R_M$**

| | | | | | |
|---|---|---|---|---|---|
| | $N_M$ = | | | | |
| $R_M = (N_M)(P_M)(L_M)$ | $P_M$ = | | $R_M$ = | | |
| | $L_M$ = | | | | $L_M = L_O$ |

**Risk of Injury to Living Beings from a Direct Strike to Incoming Service – $R_U$**

| | | | | | |
|---|---|---|---|---|---|
| | $N_L$ = | | | | |
| $R_U = (N_L+N_{da})(P_U)(L_U)$ | $N_{da}$ = | | $R_U$ = | | |
| | $P_U$ = | | | | |
| | $L_U$ = | | | | |

**Risk of Physical Damage Due to a Direct Strike to Incoming Service – $R_V$**

| | | | | | |
|---|---|---|---|---|---|
| | $N_L$ = | | | | |
| $R_V = (N_L+N_{da})(P_V)(L_V)$ | $N_{da}$ = | | $R_V$ = | | |
| | $P_V$ = | | | | |
| | $L_V$ = | | | | |

**Risk of Failure of Internal Systems Due to Direct Strike to Incoming Service – $R_W$**

| | | | | | |
|---|---|---|---|---|---|
| | $N_L$ = | | | | |
| $R_W = (N_L+N_{da})(P_W)(L_W)$ | $N_{da}$ = | | $R_W$ = | | |
| | $P_W$ = | | | | |
| | $L_W$ = | | | | $L_W = L_O$ |

© 2013 National Fire Protection Association NFPA 780 (p. 2 of 3)

**FIGURE L.6.8** *Continued*

Copyright 2014 National Fire Protection Association (NFPA). Licensed, by agreement, for individual use and download on October 4, 2014 to LEADER and READER for designated user PATTARAPORN SRITRAKOOL. No other reproduction or transmission in any form permitted without written permission of NFPA. For inquires or to report unauthorized use, contact licensing@nfpa.org.



## DETAILED RISK ASSESSMENT WORKSHEET *(continued)*

### Risk Components *(continued)*

**Risk of Failure of Internal Systems Due to Strike Near Incoming Service – $R_Z$**

| | | | | | |
|---|---|---|---|---|---|
| | $N_I$ = | | | | |
| $R_Z = (N_I - N_L)(P_Z)(L_Z)$ | $N_L$ = | | $R_Z$ = | | |
| | $P_Z$ = | | | | |
| | $L_Z$ = | | | | $L_Z = L_O$ |

### Risk Calculations

**Risk of Injury or Loss of Life – $R_1$**

| | | | | | |
|---|---|---|---|---|---|
| | $R_A$ = | | | | *Applicable only for structures with life-critical electrical equipment, risk of explosion, or where failure of internal system immediately endangers life |
| | $R_B$ = | | | | |
| | $R_C$ = | | | | |
| $R_1 = R_A + R_B + R_C{}^* + R_M{}^* + R_U + R_V + R_W{}^* + R_Z{}^*$ | $R_M$ = | | $R_1$ = | | |
| | $R_U$ = | | | | |
| | $R_V$ = | | | | |
| | $R_W$ = | | | | |
| | $R_Z$ = | | | | |

**Risk of Loss of Service (Power, Phone, Water, etc.) – $R_2$**

| | | | | | |
|---|---|---|---|---|---|
| | $R_B$ = | | | | |
| | $R_C$ = | | | | |
| $R_2 = R_B + R_C + R_M + R_V + R_W + R_Z$ | $R_M$ = | | $R_2$ = | | |
| | $R_V$ = | | | | |
| | $R_W$ = | | | | |
| | $R_Z$ = | | | | |

### Risk Calculations *(continued)*

**Risk of Loss of Historical Significance – $R_3$**

| | | | | | |
|---|---|---|---|---|---|
| | $R_B$ = | | | | |
| $R_3 = R_B + R_V$ | $R_V$ = | | $R_3$ = | | |

**Risk of an Economic Loss – $R_4$**

| | | | | | |
|---|---|---|---|---|---|
| | $R_A$ = | | | | |
| | $R_B$ = | | | | |
| | $R_C$ = | | | | **Applicable only to structures where animals could be lost |
| $R_4 = R_A{}^{**} + R_B + R_C + R_M + R_U{}^{**} + R_V + R_W + R_Z$ | $R_M$ = | | $R_4$ = | | |
| | $R_U$ = | | | | |
| | $R_V$ = | | | | |
| | $R_W$ = | | | | |
| | $R_Z$ = | | | | |

**Overall Risk to the Structure**

| | | | | | |
|---|---|---|---|---|---|
| | $R_1$ = | | | | |
| | $R_2$ = | | | | |
| $R = R_1 + R_2 + R_3 + R_4$ | $R_3$ = | | $R$ = | | |
| | $R_4$ = | | | | |

© 2013 National Fire Protection Association



**FIGURE L.6.8** *Continued*

Copyright 2014 National Fire Protection Association (NFPA). Licensed, by agreement, for individual use and download on October 4, 2014 to LEADER and READER for designated user PATTARAPORN SRITRAKOOL. No other reproduction or transmission in any form permitted without written permission of NFPA. For inquires or to report unauthorized use, contact licensing@nfpa.org.



## Annex M Guide for Personal Safety from Lightning

*This annex is not a part of the requirements of this NFPA document but is included for informational purposes only.*

**M.1 Scope.** The purpose of this annex is to furnish a guide for personal safety from lightning. Persons can be at risk prior to any visual or audible indication of a thunderstorm. Any time conditions exist that could lead to lightning activity, personal safety should be considered. Lightning warning systems are available to provide early warning of lightning activity.

**M.2 Personal Conduct Concerning Lightning Activity.**

**M.2.1** Most lightning strike victims are struck before or after the rain that usually accompanies thunderstorms. This would indicate that most people have the good sense to get out of the rain, but are not as conscious of the life-threatening hazards presented by lightning. Atmospheric conditions that cause lightning can be measured and the probability of a lightning event predicted. However, it is not possible to predict the exact location where lightning will strike since it has been known to attach to earth beyond the visible horizon.

Lightning is extremely dangerous, and unnecessary exposure should be avoided. The following recommendations are advisable:

(1) When possible, plan outdoor activities around the weather forecast. Although it is difficult to know exactly if a storm will occur, the conditions that create lightning storms, such as the meeting of high- and low-pressure systems, are predicted days in advance. On days when such weather patterns are forecast, avoid planning activities where shelter is not readily available, such as boating or camping.
(2) Check the forecast the night before and the morning of planned outdoor activities to see if lightning is a possibility.
(3) Check Internet web site weather maps before you leave. Most weather sites have recent satellite and radar images of the area of your activity.
(4) When you arrive at the area of your activity, devise a plan on where to go in the event of an approaching lightning storm. Tell all persons in your party, especially children, where to go in accordance with M.2.2. Also, tell your party where you will meet a half hour after thunder is last heard, since you may not be together when the threat of a storm arises.
(5) Carry a weather radio with an Alert feature to receive severe weather warnings.
(6) Respond accordingly when warnings are issued.

**M.2.2** If you hear thunder, seek shelter immediately. Do not try to predict how close lightning is by counting the time between the flash of lightning and the sound of thunder. Stay indoors until one-half hour after you last heard thunder. Seek shelter in structures such as the following:

(1) Dwellings or other buildings that are protected against lightning
(2) Underground shelters such as subways, tunnels, and caves
(3) Large metal-frame buildings
(4) Large unprotected buildings
(5) Enclosed automobiles, buses, and other vehicles with metal tops and bodies
(6) Enclosed metal trains and street cars
(7) Enclosed metal boats or ships
(8) Boats that are protected against lightning
(9) City streets shielded by nearby buildings

**M.2.3** If possible, avoid places with little or no protection from lightning such as the following:

(1) Small, unprotected buildings, barns, sheds, and so forth
(2) Tents and temporary shelters
(3) Automobiles (nonmetal top or open)
(4) Trailers (nonmetal or open)

**M.2.4** Certain locations are extremely hazardous during thunderstorms and should be avoided if at all possible. Approaching thunderstorms should be anticipated and the following locations avoided when thunderstorms are in the immediate vicinity:

(1) Hilltops and ridges
(2) Areas on top of buildings
(3) Open fields, athletic fields, and golf courses
(4) Parking lots and tennis courts
(5) Swimming pools (indoor or outdoor), lakes, and seashores
(6) Near wire fences, clotheslines, overhead wires, and railroad tracks
(7) Under isolated trees
(8) Near electrical appliances, telephones, plumbing fixtures, and metal or electrically conductive objects

**M.2.5** It is especially hazardous to be riding in or on any of the following during thunderstorms while in the locations described in M.2.4:

(1) Open tractors or other farm machinery operated in open fields
(2) Golf carts, scooters, bicycles, or motorcycles
(3) Open boats (without masts) and hovercraft
(4) Automobiles (nonmetal top or open)

**M.2.6** If caught in a lightning storm with no shelter available, the following recommendations should be observed:

(1) Seek depressed areas — avoid mountaintops, hilltops, and other high places.
(2) Seek dense woods — avoid isolated trees.
(3) If caught in an exposed area, crouch as low as possible, kneel on the ground, keeping feet together. Put your hands on your thighs. Do not place your hands on the ground. To minimize risk of direct strike, it is necessary to keep as low as possible. To minimize risk of step potential hazards, it is necessary to minimize the area of the body in contact with the ground. Do not lie flat.

**M.3 Protection for Persons in Watercraft.** Inasmuch as the basic purpose of protection against lightning is to ensure the safety of persons, it is appropriate that the precautions and suggestions in M.3.1 through M.3.3 be listed in addition to all applicable recommendations in the preceding sections.

**M.3.1** Remain inside a closed boat, as far as practical, during a lightning storm; do not dangle arms or legs in the water.

**M.3.2** To the extent consistent with safe handling and navigation of the boat during a lightning storm, avoid making contact with any items connected to a lightning protection system, especially in such a way as to bridge between these items. For example, it is undesirable for an operator to be in contact with reversing gear levers and a spotlight control handle at the same time.

**M.3.3** No one should be in the water during a lightning storm.

Copyright 2014 National Fire Protection Association (NFPA). Licensed, by agreement, for individual use and download on October 4, 2014 to LEADER and READER for designated user PATTARAPORN SRITRAKOOL. No other reproduction or transmission in any form permitted without written permission of NFPA. For inquires or to report unauthorized use, contact licensing@nfpa.org.



**M.4 Lightning Safety for Outdoor Workers.**

**M.4.1 Detection.** Lightning conditions are to be monitored continuously. In most cases, a combination of a lightning network subscription service, a professional-grade lightning warning system, and a high-quality handheld detector is suggested. However, if thunder is heard, the danger from lightning is close enough to suspend operations and seek refuge.

**M.4.2 Notification.**

**M.4.2.1** Suspension and resumption of work activities should be planned in advance, through policies and training. Information can be transmitted by some or all of the following methods:

(1) Sirens
(2) Strobe lights
(3) Text messages
(4) 2-way radios
(5) Telephones

**M.4.2.2** A conservative warning threshold could be the following:

Yellow condition: Lightning is in the 20–40 mi (30–60 km) range and the threat could exist.

Orange condition: Lightning is in the 10–20 mi (16–30 km) range and the threat is nearby.

Red Alert: Lightning is in the 0–10 mi (0–16 km) range and no personnel are allowed outdoors. All outside personnel must seek safety in a designated shelter that is equipped with a lightning protection system that complies with this standard. If not available, seek shelter in the structures listed in M.2.2.

**M.4.3 Reassess the Threat.** Wait until one-half hour after thunder is no longer heard before resuming outdoor activities. Be extra cautious during this storm phase, as lightning can still be a significant hazard.

**M.4.4 Policies, Procedures, Education, and Training.** Organizations should create, publish, and train personnel on appropriate lightning safety guidelines in accordance with the recommendations in Annex M.

**M.5 Lightning Strike Victims.**

**M.5.1** Individuals who have been struck by lightning do not carry an electrical charge and are safe to assist. If you are qualified, administer first aid and/or CPR immediately. Get emergency help immediately.

## Annex N Reserved

## Annex O Informational References

**O.1 Referenced Publications.** The documents or portions thereof listed in this annex are referenced within the informational sections of this standard and are not part of the requirements of this document unless also listed in Chapter 2 for other reasons.

**O.1.1 NFPA Publications.** National Fire Protection Association, 1 Batterymarch Park, Quincy, MA 02169-7471.

*NFPA 70®, National Electrical Code®*, 2014 edition.

NFPA 70B, *Recommended Practice for Electrical Equipment Maintenance*, 2013 edition.

*NFPA 70E®, Standard for Electrical Safety in the Workplace®*, 2012 edition.

NFPA 302, *Fire Protection Standard for Pleasure and Commercial Motor Craft*, 2010 edition.

NFPA 407, *Standard for Aircraft Fuel Servicing*, 2012 edition.

NFPA 410, *Standard on Aircraft Maintenance*, 2010 edition.

**O.1.2 Other Publications.**

**O.1.2.1 API Publications.** American Petroleum Institute, 1220 L Street, NW, Washington, DC 20005-4070.

API RP 545, *Recommended Practice for Lightning Protection of Aboveground Storage Tanks for Flammable or Combustible Liquids*, October 2009.

API 650, *Welded Steel Tanks for Oil Storage*, November 1998; Errata, April 2007.

**O.1.2.2 Federal Aviation Administration (FAA) Publications.** U.S. Department of Transportation, Subsequent Business Office, Ardmore East Business Center, 3341 Q 75th Avenue, Landover, MD 20785. FAA Advisory Circulars are also available at http://www.faa.gov/airports/resources/advisory_circulars/.

FAA Advisory Circular 150/5340-30F, *Design and Installation Details for Airport Visual Aids*, September 29, 2011.

FAA Advisory Circular 150/5345-42F, *Specification for Airport Light Bases, Transformer Housings, Junction Boxes, and Accessories*, October 17, 2006.

**O.1.2.3 IEC Publications.** International Electrotechnical Commission, 3, rue de Varembé, P.O. Box 131, CH-1211 Geneva 20, Switzerland.

IEC 62305-2, *Protection Against Lightning — Part 2: Risk Management*, Edition 2, 2010.

IEC 62305-3, *Protection Against Lightning — Part 3: Physical Damage to Structures and Life Hazard*, Edition 2, 2010.

IEC 62305-4, *Protection Against Lightning — Part 4: Electrical and Electronic Systems Within Structures*, Edition 2, 2010.

**O.1.2.4 Military Publications.** The following military standard is available from Naval Publications and Forms Center, 5801 Tabor Avenue, Philadelphia, PA 19120; Headquarters, Army Material Command Code DRXAM-ABS, Alexandria, VA; or Air Force Publications Center, Baltimore, MD.

MIL-STD-464C, *Interface Standard Electromagnetic Environmental Effects Requirements for Systems*, 2010.

**O.1.2.5 UL Publications.** Underwriters Laboratories Inc., 333 Pfingsten Road, Northbrook, IL 60062-2096.

ANSI/UL 96, *Standard for Lightning Protection Components*, 2005.

ANSI/UL 467, *Grounding and Bonding Equipment*, 2007.

ANSI/UL 1449, *Standard for Safety for Transit Voltage Surge Suppressors*, 2nd Edition, 1996.

ANSI/UL 1449, *Standard for Surge Protective Devices*, 2006, with revisions through July 11, 2012.

**O.1.2.6 Other Publications.** López, R. E., and L. R. Holle. "Lightning Casualties and Damages in the United States from 1959 to 1994," *Journal of Climate*, 13 Issue 19 (October 2000): 3448–3464.

Moore, C. B., W. Rison, J. Mathis, and G. Aulich. "Lightning Rod Improvement Studies," *Journal of Applied Meteorology*, 39:593–609.

Copyright 2014 National Fire Protection Association (NFPA). Licensed, by agreement, for individual use and download on October 4, 2014 to LEADER and READER for designated user PATTARAPORN SRITRAKOOL. No other reproduction or transmission in any form permitted without written permission of NFPA. For inquires or to report unauthorized use, contact licensing@nfpa.org.



**O.2 Informational References.** The following documents or portions thereof are listed here as informational resources only. They are not a part of the requirements of this document.

**O.2.1 IEC Publications.** International Electrotechnical Commission, 3, rue de Varembé, P.O. Box 131, CH-1211 Geneva 20, Switzerland.

IEC 61400-24, *Wind Turbines — Part 24: Lightning Protection*, 2010.

IEC 61643-11, *Low-Voltage Surge Protective Devices — Part 11: Surge Protective Devices Connected to Low-Voltage Power Distribution Systems — Requirements and Test Methods*, 2011.

IEC 61643-12, *Low-Voltage Surge Protective Devices — Part 12: Surge Protective Devices Connected to Low-Voltage Power Distribution Systems — Selection and Application Principles*, 2008.

IEC 61643-21, *Low Voltage Surge Protective Devices — Part 21: Surge Protective Devices Connected to Telecommunications and Signalling Networks — Performance Requirements and Testing Methods*, Edition 1.1, 2009.

IEC 61643-22, *Low Voltage Surge Protective Devices — Part 22: Surge Protective Devices Connected to Telecommunications and Signalling Networks — Selection and Application Principles*, 2004.

IEC 62305-1, *Protection Against Lightning — Part 1: General Principles*, Edition 2, 2010.

**O.2.2 IEEE Publications.** Institute of Electrical and Electronics Engineers, Three Park Avenue, 17th Floor, New York, NY 10016-5997.

ANSI/IEEE C62.41.1, *Guide on the Surge Environment in Low-Voltage (1000 V and Less) AC Power Circuits*, 2002.

ANSI/IEEE C62.41.2, *Recommended Practice on Characterization of Surges in Low-Voltage (1000 V and Less) AC Power Circuits*, 2002.

ANSI/IEEE C62.45, *IEEE Recommended Practice on Surge Testing for Equipment Connected to Low-Voltage AC Power Circuits*, 2002.

ANSI/IEEE 1100, *Recommended Practice for Powering and Grounding Electronic Equipment (Emerald Book)*, 2005.

IEEE 0093-9994/1100-0465, *Protection Zone for Buildings Against Lightning Strokes Using Transmission Protection Practices*, R. H. Lee, 1978.

IEEE 80, *IEEE Guide for Safety in AC Substation Grounding*, 2000.

IEEE 141, *IEEE Recommended Practice for Electric Power Distribution for Industrial Plants*, 1993.

**O.2.3 Military Publications.** The following military standards and handbooks are available from Naval Publications and Forms Center, 5801 Tabor Avenue, Philadelphia, PA 19120; Headquarters, Army Material Command Code DRXAM-ABS, Alexandria, VA; or Air Force Publications Center, Baltimore, MD.

AFMAN 91-201, *Explosive Safety Standards*, Department of Air Force, Washington, DC, January 2011.

AMCR 385-100, *Safety Manual*, Army Material Command, Washington, DC, 1995.

DoDM 6055.09-M, *DoD Ammunition and Explosives Safety Standards: Explosives Safety Construction Criteria, Attachment 4*, Department of Defense, Washington, DC, 2008.

MIL-HDBK-419A, *Grounding, Bonding and Surge Suppression*, Volumes I and II, Department of Defense, Washington, DC, December 1987.

NAVSEA OP-5, *Ammunition and Explosives Ashore*, Volume 1, Revision 7, Chapter 6, Naval Sea Systems Command, Washington, DC, March 2011.

Tobias, J. M., ed., *The Basis of Conventional Lightning Protection Technology*, Federal Interagency Lightning Protection Group, available at www.stinet.dtic.mil, Report No. ADA396784, p. 21, June 2001.

**O.2.4 UL Publications.** Underwriters Laboratories Inc., 333 Pfingsten Road, Northbrook, IL 60062-2096.

ANSI/UL 497, *Standard for Protectors for Paired Conductor Communications Circuits*, 7th Edition, 2001.

ANSI/UL 497A, *Standard for Secondary Protectors for Communications Circuits*, 3rd Edition, 2001.

ANSI/UL 497B, *Standard for Protectors for Data Communications and Fire Alarm Circuits*, 4th Edition, 2004.

ANSI/UL 497C, *Standard for Protectors for Coaxial Communications Circuits*, 2nd Edition, 2001.

UL 497E, *Outline of Investigation for Protectors for Antenna Lead-In Conductors*, 2011.

**O.2.5 Other Publications.**

Cotton, I., and N. Jenkins. "Lightning Protection of Wind Turbines, Lightning Protection 98, Buildings, Structures and Electronic Equipment," International Conference and Exhibition, Paper 6.1, Solihull, West Midlands, UK, May 6–7, 1998.

D'Alessandro, and F., M. Havelka. "Electrical Grounding of Wind Turbines," EEA Annual Conference, Auckland, New Zealand, June 17–18, 2005.

**O.3 References for Extracts in Informational Sections. (Reserved)**

Copyright 2014 National Fire Protection Association (NFPA). Licensed, by agreement, for individual use and download on October 4, 2014 to LEADER and READER for designated user PATTARAPORN SRITRAKOOL. No other reproduction or transmission in any form permitted without written permission of NFPA. For inquires or to report unauthorized use, contact licensing@nfpa.org.



# Index

Copyright © 2013 National Fire Protection Association. All Rights Reserved.

The copyright in this index is separate and distinct from the copyright in the document that it indexes. The licensing provisions set forth for the document are not applicable to this index. This index may not be reproduced in whole or in part by any means without the express written permission of NFPA.


-A-

**Administration** ..... Chap. 1
Listed, Labeled, or Approved Components ..... 1.3
Maintenance ..... 1.6, A.1.6
Mechanical Execution of Work ..... 1.5
Purpose ..... 1.2
Retroactivity ..... 1.4
Scope ..... 1.1
Units of Measurement ..... 1.7
**Air Terminal**
Definition ..... 3.3.1, A.3.3.1
Aluminum ..... 4.2.2.3
**Approved**
Definition ..... 3.2.1, A.3.2.1
**Authority Having Jurisdiction (AHJ)**
Definition ..... 3.2.2, A.3.2.2

-B-

**Bonding**
Definition ..... 3.3.2

-C-

**Cable**
Definition ..... 3.3.3, A.3.3.3
**Catenary Lightning Protection System**
Definition ..... 3.3.4
**Chimney**
Definition ..... 3.3.5
**Combination Waveform Generator**
Definition ..... 3.3.6, A.3.3.6
**Conductor**
Bonding Conductor
Definition ..... 3.3.7.1
Counterpoise Conductor
Definition ..... 3.3.7.2
Definition ..... 3.3.7
Down Conductor
Definition ..... 3.3.7.3
Loop Conductor
Definition ..... 3.3.7.4
Main Conductor
Definition ..... 3.3.7.5, A.3.3.7.5
Roof Conductor
Definition ..... 3.3.7.6
Copper ..... 4.2.2.1
Copper Alloys ..... 4.2.2.2
**Copper-Clad Steel**
Definition ..... 3.3.8

-D-

**Definitions** ..... Chap. 3
**Discharge Current**
Definition ..... 3.3.9
Maximum Discharge Current ($I_{max}$)
Definition ..... 3.3.9.1
Nominal Discharge Current ($I_n$)
Definition ..... 3.3.9.2

-E-

**Explanation of Bonding Principles** ..... Annex C
**Explanatory Material** ..... Annex A

-F-

**Fastener**
Definition ..... 3.3.10
**Flame Protection**
Definition ..... 3.3.11
**Flammable Air-Vapor Mixtures**
Definition ..... 3.3.12, A.3.3.12
**Flammable Vapors**
Definition ..... 3.3.13
**Flash Point**
Definition ..... 3.3.14

-G-

**Gastight**
Definition ..... 3.3.15
**General Requirements** ..... Chap. 4
Bonding of Metal Bodies ..... 4.16, A.4.16
Grounded Metal Bodies ..... 4.16.2
Structures 40 ft (12 m) and Less in Height ..... 4.16.2.5
Structures More Than 40 ft (12 m) in Height ..... 4.16.2.4
Isolated (Ungrounded) Metallic Bodies ..... 4.16.3, A.4.16.3
Long, Vertical Metal Bodies ..... 4.16.1
Other Structures ..... 4.16.1.3
Reinforced Concrete Structures Where the Reinforcement Is Interconnected and Grounded in Accordance with 4.18.3 ..... 4.16.1.2
Steel-Framed Structures ..... 4.16.1.1
Materials ..... 4.16.4
Common Bonding of Grounded Systems ..... 4.14
General ..... 4.14.1
Concealed Systems ..... 4.18
Concealment in Steel-Reinforced Concrete ..... 4.18.3
General ..... 4.18.1
Grounding Electrodes ..... 4.18.4
Masonry Chimneys ..... 4.18.2
Conductor Fasteners ..... 4.10
Conductors ..... 4.9
Conductor Bends ..... 4.9.5
Conductor Supports ..... 4.9.6
Cross-Run Conductors ..... 4.9.8
Dead Ends ..... 4.9.2
Down Conductors ..... 4.9.9
Down Conductors and Structural Columns ..... 4.9.13
Down Conductors Entering Corrosive Soil ..... 4.9.12
Down Conductors in Nonmetallic Enclosures ..... 4.9.14
Number of Down Conductors ..... 4.9.10
One-Way Path ..... 4.9.1
Protecting Down Conductors ..... 4.9.11
Roof Conductors ..... 4.9.7
Substitution of Main Conductor ..... 4.9.3
"U" or "V" Pockets ..... 4.9.4
Connector Fittings ..... 4.12
Corrosion Protection ..... 4.3
Connectors and Fittings ..... 4.3.3
General ..... 4.1
Material Class Requirements ..... 4.1.1
Grounding Electrodes ..... 4.13
Combinations ..... 4.13.7
Concrete-Encased Electrodes ..... 4.13.3

Copyright 2014 National Fire Protection Association (NFPA). Licensed, by agreement, for individual use and download on October 4, 2014 to LEADER and READER for designated user PATTARAPORN SRITRAKOOL. No other reproduction or transmission in any form permitted without written permission of NFPA. For inquires or to report unauthorized use, contact licensing@nfpa.org.




General ..... 4.13.1
Ground Ring Electrode ..... 4.13.4
Ground Rods ..... 4.13.2, A.4.13.2
Ground Rod Depth ..... 4.13.2.3
Multiple Ground Rods ..... 4.13.2.4, A.4.13.2.4
Grounding Electrode Selection Criteria ..... 4.13.8
Sandy Soil Conditions ..... 4.13.8.2
Shallow Topsoil ..... 4.13.8.1, A.4.13.8.1
Plate Electrode or Ground Plate Electrode ..... 4.13.6, A.4.13.6
Radials ..... 4.13.5, A.4.13.5
Masonry Anchors ..... 4.11
Materials ..... 4.2
Mechanical Damage or Displacement ..... 4.4
Metal Antenna Masts and Supports ..... 4.17
Potential Equalization ..... 4.15
Ground-Level Potential Equalization ..... 4.15.1
Intermediate-Level Potential Equalization ..... 4.15.3
Other Structures ..... 4.15.3.3
Reinforced Concrete Structures Where the Reinforcement Is Interconnected and Grounded in Accordance with 4.18.3 ..... 4.15.3.2
Steel-Framed Structures ..... 4.15.3.1
Materials ..... 4.15.4
Roof-Level Potential Equalization ..... 4.15.2, A.4.15.2
Strike Termination Devices ..... 4.6
Air Terminals ..... 4.6.2
Air Terminal Support ..... 4.6.2.2
Ornaments ..... 4.6.2.3
General ..... 4.6.1
Isolated Masts and Overhead Ground Wires ..... 4.6.5, A.4.6.5
Lightning Protection Masts ..... 4.6.3
Overhead Ground Wires ..... 4.6.4
Strike Termination Devices on Roofs ..... 4.7
Chimneys, Vents, and Other Objects on Roofs Not in a Zone of Protection ..... 4.7.11, A.4.7.11
Domed or Rounded Roofs ..... 4.7.10
Dormers ..... 4.7.7, A.4.7.7
Flat or Gently Sloping Roof Area ..... 4.7.5
Flat or Gently Sloping Roofs with Irregular Perimeters ..... 4.7.6
Location of Devices ..... 4.7.2, A.4.7.2
Metal Roof Top Units ..... 4.7.12
Movable or Rotating Objects on Roofs ..... 4.7.13, A.4.7.13
Open Areas in Flat Roofs ..... 4.7.9
Pitched Roof Areas ..... 4.7.3
Roof Types ..... 4.7.1
Roofs with Intermediate Ridges ..... 4.7.4
Strike Termination Devices Installed on Vertical Roof Members ..... 4.7.8
Structural Metallic Systems ..... 4.19
Bonding Connections ..... 4.19.5
Connections to Framework ..... 4.19.3
General ..... 4.19.1
Grounding Electrodes ..... 4.19.4
Strike Termination Devices ..... 4.19.2
Surge Protection ..... 4.20
Communications Surge Protection ..... 4.20.6
Utility-Owned Communication Equipment ..... 4.20.6.5
Earth Grounding Electrode ..... 4.20.8, A.4.20.8
Facility ac Surge Protection ..... 4.20.5, A.4.20.5
General ..... 4.20.1, A.4.20.1
Installation ..... 4.20.7
Measured Limiting Voltage of an SPD ..... 4.20.4, A.4.20.4
Physical Characteristics ..... 4.20.9
Surge Protection Requirements ..... 4.20.2, A.4.20.2
Surge Protective Device Ratings ..... 4.20.3
Electrical Power Circuits ..... 4.20.3.1, A.4.20.3.1
Signal, Data, and Communication Protection ..... 4.20.3.2
Use of Aluminum ..... 4.5
Zones of Protection ..... 4.8
Multiple-Level Roofs ..... 4.8.2
Rolling Sphere Method ..... 4.8.3
**Ground Measurement Techniques** ..... Annex E
**Grounded (Grounding)**
Definition ..... 3.3.16
**Grounding Electrode**
Definition ..... 3.3.17
**Guide for Personal Safety from Lightning** ..... Annex M

**-H-**

**Hazard Division 1.4**
Definition ..... 3.3.18
**Headwall**
Definition ..... 3.3.19
**Heavy-Duty Stack**
Definition ..... 3.3.20

**-I-**

**Informational References** ..... Annex O
**Inspection and Maintenance of Lightning Protection Systems** ..... Annex D
**ISO Container**
Definition ..... 3.3.21

**-L-**

**Labeled**
Definition ..... 3.2.3
**Light Base**
Definition ..... 3.3.22, A.3.3.22
**Lightning Electromagnetic Impulse (LEMP)**
Definition ..... 3.3.23
**Lightning Protection System**
Definition ..... 3.3.24, A.3.3.24
**Lightning Risk Assessment** ..... Annex L
**Liquid**
Class I Flammable Liquid
Definition ..... 3.3.25.1
Combustible Liquid
Definition ..... 3.3.25.2
Definition ..... 3.3.25
**Listed**
Definition ..... 3.2.4, A.3.2.4

**-M-**

**Magazine**
Definition ..... 3.3.26
Earth-Covered Magazine (ECM)
Definition ..... 3.3.26.1
Portable Magazine
Definition ..... 3.3.26.2
**Magnetically Shielded**
Definition ..... 3.3.27
**Materials**
Class I Materials
Definition ..... 3.3.28.1, A.3.3.28.1
Class II Materials
Definition ..... 3.3.28.2, A.3.3.28.2
Definition ..... 3.3.28
Explosive Materials
Definition ..... 3.3.28.3
**Mounting Stake**
Definition ..... 3.3.29, A.3.3.29

**-P-**

**Pavement**
Definition ..... 3.3.30
Full Strength Pavement
Definition ..... 3.3.30.1
Shoulder Pavement
Definition ..... 3.3.30.2
**Principles of Lightning Protection** ..... Annex B

Copyright 2014 National Fire Protection Association (NFPA). Licensed, by agreement, for individual use and download on October 4, 2014 to LEADER and READER for designated user PATTARAPORN SRITRAKOOL. No other reproduction or transmission in any form permitted without written permission of NFPA. For inquires or to report unauthorized use, contact licensing@nfpa.org.



**Protection for Airfield Lighting Circuits** ..... Chap. 11
Application ..... 11.2
General ..... 11.1
Installation of Airfield Lighting Counterpoise System ..... 11.4
Bend Radius ..... 11.4.9
Bonding Jumpers ..... 11.4.6
Connection Requirements ..... 11.4.8
Counterpoise Conductor ..... 11.4.1, A.11.4.1
Counterpoise Conductor Interconnections ..... 11.4.4
Counterpoise Conductor Location ..... 11.4.2
Grounding Electrodes ..... 11.4.5
Metallic Light Base Grounding ..... 11.4.7, A.11.4.7
Multiple Raceways or Cables in a Common Formation ..... 11.4.3
Purpose ..... 11.3
**Protection for Heavy-Duty Stacks** ..... Chap. 6
Bonding of Metal Bodies ..... 6.8
Isolated (Ungrounded) Protruding Metal Bodies ..... 6.8.2
Exterior ..... 6.8.2.1
Interior ..... 6.8.2.2
Potential Equalization ..... 6.8.1
Ground Level of Stack ..... 6.8.1.1
Intermediate Levels of Stack ..... 6.8.1.3
Top Level of Stack ..... 6.8.1.2
Conductors ..... 6.4
Down Conductors ..... 6.4.2
General ..... 6.4.1
Fasteners ..... 6.5
General ..... 6.1
Grounding ..... 6.9, A.6.9
Materials ..... 6.2
Corrosion Protection ..... 6.2.2
General ..... 6.2.1
Metal Guy Wires and Cables ..... 6.11
Metal Stacks ..... 6.10
Reinforced Concrete Stacks ..... 6.7
Splices ..... 6.6
Strike Termination Devices ..... 6.3
Air Terminal Heights ..... 6.3.3
Air Terminal Mountings ..... 6.3.4
Steel Hoods ..... 6.3.5
**Protection for Livestock in Fields** ..... Annex H
**Protection for Miscellaneous Structures and Special Occupancies** ..... Chap. 5
Air-Inflated Structures ..... 5.5
Concrete Tanks and Silos ..... 5.6
General ..... 5.1
Grain-, Coal-, and Coke-Handling and -Processing Structures ..... 5.3
Guyed Structures ..... 5.7
Masts, Spires, Flagpoles ..... 5.2
Metal Towers and Tanks ..... 5.4
Roof Top Helipads ..... 5.8
**Protection for Parked Aircraft** ..... Annex I
**Protection for Picnic Grounds, Playgrounds, Ball Parks, and Other Open Places** ..... Annex G
**Protection for Solar Arrays** ..... Chap. 12
Fundamental Principles of Protection ..... 12.2
General ..... 12.1
Grounding ..... 12.5
Ground-Mounted Systems ..... 12.5.1
Roof-Mounted Systems ..... 12.5.2
Protection of Electrical and Mechanical Systems ..... 12.4
Surge Protection ..... 12.4.2
Maximum Continuous Operating Voltage (MCOV) ..... 12.4.2.4
Short Circuit Current Rating ..... 12.4.2.5
Voltage Protection Rating (VPR) ..... 12.4.2.6
Strike Termination Devices ..... 12.3
**Protection for Structures Containing Flammable Vapors, Flammable Gases, or Liquids That Can Give Off Flammable Vapors** ..... Chap. 7
Fundamental Principles of Protection ..... 7.2
Protection of Specific Classes of Structures ..... 7.4
Aboveground Tanks at Atmospheric Pressure Containing Flammable Vapors or Liquids That Give Off Flammable Vapors ..... 7.4.1
Bypass Conductors ..... 7.4.1.3, A.7.4.1.3
External Floating Roof Tanks ..... 7.4.1.2, A.7.4.1.2
Shunt Description ..... 7.4.1.2.2
Shunt Placement ..... 7.4.1.2.1
Fixed Roof Tanks (Metallic) and Tanks with Internal Floating Roofs ..... 7.4.1.1, A.7.4.1.1
Grounding Tanks ..... 7.4.1.7
Insulation of Gauge or Guide Poles ..... 7.4.1.5
Metallic Tanks with Nonmetallic Roofs ..... 7.4.1.6
Parallel Conducting Paths (Seal Assembly from the Floating Roof Tank) ..... 7.4.1.4
Earthen Containers at Atmospheric Pressure Containing Flammable Vapors or Liquids That Give Off Flammable Vapors ..... 7.4.2
Protective Measures ..... 7.3
Materials and Installation ..... 7.3.1
Zone of Protection for Masts and Overhead Ground Wires ..... 7.3.2
Alternative Grounding Methods ..... 7.3.2.7
Overhead Ground Wire ..... 7.3.2.6
Reduction of Damage ..... 7.1
Application ..... 7.1.1, A.7.1.1
**Protection for Trees** ..... Annex F
**Protection for Watercraft** ..... Chap. 10
Conductors ..... 10.4
Bonding Conductor ..... 10.4.2
Conductor System ..... 10.4.4
Connecting Fittings ..... 10.4.6
Joints ..... 10.4.5
Loop Conductor ..... 10.4.3
Main Conductor ..... 10.4.1
General ..... 10.1
Grounding ..... 10.5
Galvanic Corrosion Protection ..... 10.5.5, A.10.5.5
Main Grounding Electrode ..... 10.5.3
Supplemental Grounding Electrode ..... 10.5.4
Watercraft with Metal Hulls ..... 10.5.1
Watercraft with Nonmetallic Hulls ..... 10.5.2
Materials ..... 10.2
Corrosion ..... 10.2.1
Permitted Materials ..... 10.2.2
Strike Termination ..... 10.3
Nonmetallic Masts ..... 10.3.3
Strike Termination Devices ..... 10.3.2
Zone of Protection ..... 10.3.1, A.10.3.1
**Protection for Wind Turbines** ..... Chap. 9
Fundamental Principle of Protection ..... 9.2
General ..... 9.1, A.9.1
Grounding ..... 9.4
Protection of Electrical and Mechanical Control Systems ..... 9.3
**Protection of Structures Housing Explosive Materials** ..... Chap. 8
Application ..... 8.1
Bonding ..... 8.5
Access Doors ..... 8.5.5
Direct Bonding Techniques ..... 8.5.4
General ..... 8.5.1
Isolated Metallic Masses ..... 8.5.3
Metallic Barricades or Bollards ..... 8.5.6
Railroad Tracks ..... 8.5.7
Sideflash Distance ..... 8.5.2
General ..... 8.2
Electromagnetic Coupling ..... 8.2.2
Striking Distance ..... 8.2.1

Copyright 2014 National Fire Protection Association (NFPA). Licensed, by agreement, for individual use and download on October 4, 2014 to LEADER and READER for designated user PATTARAPORN SRITRAKOOL. No other reproduction or transmission in any form permitted without written permission of NFPA. For inquires or to report unauthorized use, contact licensing@nfpa.org.




Grounding ..... 8.4
Concrete-Encased Electrodes ..... 8.4.2
Earth Enhancement ..... 8.4.6
General ..... 8.4.1
Ground Plate Electrodes ..... 8.4.5
Ground Ring Electrodes ..... 8.4.3
Radials ..... 8.4.4
Inspection, Testing, and Maintenance ..... 8.10
Maintenance and Inspection ..... 8.9, A.8.9
Metallic Fences ..... 8.8
Bonding ..... 8.8.2
Gates and Gate Posts ..... 8.8.3
Grounding ..... 8.8.1
Protection for Specific Facilities ..... 8.7
Cranes ..... 8.7.3
Earth-Covered Magazines ..... 8.7.1
Metal Portable Magazines ..... 8.7.5, A.8.7.5
Portable Magazine Groups ..... 8.7.5.4
Single Portable Magazines ..... 8.7.5.3
Open Storage Pads ..... 8.7.4
Piers and Wharves ..... 8.7.2, A.8.7.2
Surge Protection ..... 8.6
Types of Lightning Protection ..... 8.3
Integral Lightning Protection Systems ..... 8.3.4, A.8.3.4
Metallic (Faraday-Like) Cage ..... 8.3.1, A.8.3.1
Overhead Wire (Catenary) Systems ..... 8.3.3
Single or Multiple Masts ..... 8.3.2
Grounding of Masts ..... 8.3.2.2
Mast Lightning Protection System ..... 8.3.2.1, A.8.3.2.1

-R-

**Raceway**
Definition ..... 3.3.31, A.3.3.31
**Referenced Publications** ..... Chap. 2
General ..... 2.1
NFPA Publications ..... 2.2
Other Publications ..... 2.3
References for Extracts in Mandatory Sections ..... 2.4

-S-

**Shall**
Definition ..... 3.2.5
**Should**
Definition ..... 3.2.6
**Sideflash**
Definition ..... 3.3.32
**Spark Gap**
Definition ..... 3.3.33
**Standard**
Definition ..... 3.2.7
**Strike Termination Device**
Definition ..... 3.3.34
**Striking Distance**
Definition ..... 3.3.35
**Structure**
Definition ..... 3.3.36
Metal-Clad Structure
Definition ..... 3.3.36.1
Metal-Framed Structure
Definition ..... 3.3.36.2
**Surge**
Definition ..... 3.3.37
**Surge Protective Device (SPD)**
Definition ..... 3.3.38

-T-

**Transient**
Definition ..... 3.3.39
**Turf**
Definition ..... 3.3.40

-V-

**Vapor Opening**
Definition ..... 3.3.41
**Voltage**
Definition ..... 3.3.42
Maximum Continuous Operating Voltage (MCOV)
Definition ..... 3.3.42.1
Measured Limiting Voltage (MLV)
Definition ..... 3.3.42.2
Nominal System Voltage
Definition ..... 3.3.42.3
Normal Operating Voltage
Definition ..... 3.3.42.4
**Voltage Protection Rating (VPR)**
Definition ..... 3.3.43, A.3.3.43

-W-

**Watercraft**
Definition ..... 3.3.44

-Z-

**Zone of Protection**
Definition ..... 3.3.45

Copyright 2014 National Fire Protection Association (NFPA). Licensed, by agreement, for individual use and download on October 4, 2014 to LEADER and READER for designated user PATTARAPORN SRITRAKOOL. No other reproduction or transmission in any form permitted without written permission of NFPA. For inquires or to report unauthorized use, contact licensing@nfpa.org.

# *Sequence of Events Leading to Issuance of This NFPA Committee Document*

## Step 1: Call for Proposals

- Proposed new Document or new edition of an existing Document is entered into one of two yearly revision cycles, and a Call for Proposals is published.

## Step 2: Report on Proposals (ROP)

- Committee meets to act on Proposals, to develop its own Proposals, and to prepare its Report.
- Committee votes by written ballot on Proposals. If two-thirds approve, Report goes forward. Lacking two-thirds approval, Report returns to Committee.
- Report on Proposals (ROP) is published for public review and comment.

## Step 3: Report on Comments (ROC)

- Committee meets to act on Public Comments to develop its own Comments, and to prepare its report.
- Committee votes by written ballot on Comments. If two-thirds approve, Report goes forward. Lacking two-thirds approval, Report returns to Committee.
- Report on Comments (ROC) is published for public review.

## Step 4: Technical Report Session

- "*Notices of intent to make a motion*" are filed, are reviewed, and valid motions are certified for presentation at the Technical Report Session. ("Consent Documents" that have no certified motions bypass the Technical Report Session and proceed to the Standards Council for issuance.)
- NFPA membership meets each June at the Annual Meeting Technical Report Session and acts on Technical Committee Reports (ROP and ROC) for Documents with "certified amending motions."
- Committee(s) vote on any amendments to Report approved at NFPA Annual Membership Meeting.

## Step 5: Standards Council Issuance

- Notification of intent to file an appeal to the Standards Council on Association action must be filed within 20 days of the NFPA Annual Membership Meeting.
- Standards Council decides, based on all evidence, whether or not to issue Document or to take other action, including hearing any appeals.

# *Committee Membership Classifications*

The following classifications apply to Technical Committee members and represent their principal interest in the activity of the committee.

M *Manufacturer:* A representative of a maker or marketer of a product, assembly, or system, or portion thereof, that is affected by the standard.

U *User:* A representative of an entity that is subject to the provisions of the standard or that voluntarily uses the standard.

I/M *Installer/Maintainer:* A representative of an entity that is in the business of installing or maintaining a product, assembly, or system affected by the standard.

L *Labor:* A labor representative or employee concerned with safety in the workplace.

R/T *Applied Research/Testing Laboratory:* A representative of an independent testing laboratory or independent applied research organization that promulgates and/or enforces standards.

E *Enforcing Authority:* A representative of an agency or an organization that promulgates and/or enforces standards.

I *Insurance:* A representative of an insurance company, broker, agent, bureau, or inspection agency.

C *Consumer:* A person who is, or represents, the ultimate purchaser of a product, system, or service affected by the standard, but who is not included in the *User* classification.

SE *Special Expert:* A person not representing any of the previous classifications, but who has a special expertise in the scope of the standard or portion thereof.

NOTES:
1. "Standard" connotes code, standard, recommended practice, or guide.
2. A representative includes an employee.
3. While these classifications will be used by the Standards Council to achieve a balance for Technical Committees, the Standards Council may determine that new classifications of members or unique interests need representation in order to foster the best possible committee deliberations on any project. In this connection, the Standards Council may make appointments as it deems appropriate in the public interest, such as the classification of "Utilities" in the National Electrical Code Committee.
4. Representatives of subsidiaries of any group are generally considered to have the same classification as the parent organization.

Copyright 2014 National Fire Protection Association (NFPA). Licensed, by agreement, for individual use and download on October 4, 2014 to LEADER and READER for designated user PATTARAPORN SRITRAKOOL. No other reproduction or transmission in any form permitted without written permission of NFPA. For inquires or to report unauthorized use, contact licensing@nfpa.org.

## Submitting Public Input / Public Comment through the Electronic Submission System (e-Submission):

As soon as the current edition is published, a Standard is open for Public Input.

Before accessing the e-Submission System, you must first sign-in at www.NFPA.org. *Note: You will be asked to sign-in or create a free online account with NFPA before using this system*:

a. Click in the gray Sign In box on the upper left side of the page. Once signed-in, you will see a red "Welcome" message in the top right corner.
b. Under the Codes and Standards heading, Click on the Document Information pages (List of Codes & Standards), and then select your document from the list or use one of the search features in the upper right gray box.

*OR*

a. Go directly to your specific document page by typing the convenient short link of www.nfpa.org/document#, (Example: NFPA 921 would be www.nfpa.org/921) Click in the gray Sign In box on the upper left side of the page. Once signed in, you will see a red "Welcome" message in the top right corner.

To begin your Public Input, select the link The next edition of this standard is now open for Public Input (formally "proposals") located on the Document Information tab, the Next Edition tab, or the right-hand Navigation bar. Alternatively, the Next Edition tab includes a link to Submit Public Input online

At this point, the NFPA Standards Development Site will open showing details for the document you have selected. This "Document Home" page site includes an explanatory introduction, information on the current document phase and closing date, a left-hand navigation panel that includes useful links, a document Table of Contents, and icons at the top you can click for Help when using the site. The Help icons and navigation panel will be visible except when you are actually in the process of creating a Public Input.

Once the First Draft Report becomes available there is a Public comment period during which anyone may submit a Public Comment on the First Draft. Any objections or further related changes to the content of the First Draft must be submitted at the Comment stage.

To submit a Public Comment you may access the e-Submission System utilizing the same steps as previous explained for the submission of Public Input.

For further information on submitting public input and public comments, go to: http://www.nfpa.org/publicinput

## Other Resources available on the Doc Info Pages

**Document information tab**: Research current and previous edition information on a Standard

**Next edition tab**: Follow the committee's progress in the processing of a Standard in its next revision cycle.

**Technical committee tab:** View current committee member rosters or apply to a committee

**Technical questions tab**: For members and Public Sector Officials/AHJs to submit questions about codes and standards to NFPA staff. Our Technical Questions Service provides a convenient way to receive timely and consistent technical assistance when you need to know more about NFPA codes and standards relevant to your work. Responses are provided by NFPA staff on an informal basis.

**Products/training tab:** List of NFPA's publications and training available for purchase.

**Community tab:** Information and discussions about a Standard

Copyright 2014 National Fire Protection Association (NFPA). Licensed, by agreement, for individual use and download on October 4, 2014 to LEADER and READER for designated user PATTARAPORN SRITRAKOOL. No other reproduction or transmission in any form permitted without written permission of NFPA. For inquires or to report unauthorized use, contact licensing@nfpa.org.

# Information on the NFPA Standards Development Process

**I. Applicable Regulations.** The primary rules governing the processing of NFPA standards (codes, standards, recommended practices, and guides) are the NFPA *Regulations Governing the Development of NFPA Standards (Regs)*. Other applicable rules include NFPA *Bylaws*, NFPA *Technical Meeting Convention Rules*, NFPA *Guide for the Conduct of Participants in the NFPA Standards Development Process*, and the NFPA *Regulations Governing Petitions to the Board of Directors from Decisions of the Standards Council*. Most of these rules and regulations are contained in the *NFPA Standards Directory*. For copies of the *Directory*, contact Codes and Standards Administration at NFPA Headquarters; all these documents are also available on the NFPA website at "www.nfpa.org."

The following is general information on the NFPA process. All participants, however, should refer to the actual rules and regulations for a full understanding of this process and for the criteria that govern participation.

**II. Technical Committee Report.** The Technical Committee Report is defined as "the Report of the responsible Committee(s), in accordance with the Regulations, in preparation of a new or revised NFPA Standard." The Technical Committee Report is in two parts and consists of the First Draft Report and the Second Draft Report. (See *Regs* at 1.4)

**III. Step 1: First Draft Report.** The First Draft Report is defined as "Part one of the Technical Committee Report, which documents the Input Stage." The First Draft Report consists of the First Draft, Public Input, Committee Input, Committee and Correlating Committee Statements, Correlating Input, Correlating Notes, and Ballot Statements. (See *Regs* at 4.2.5.2 and Section 4.3) Any objection to an action in the First Draft Report must be raised through the filing of an appropriate Comment for consideration in the Second Draft Report or the objection will be considered resolved. [See *Regs* at 4.3.1(b)]

**IV. Step 2: Second Draft Report.** The Second Draft Report is defined as "Part two of the Technical Committee Report, which documents the Comment Stage." The Second Draft Report consists of the Second Draft, Public Comments with corresponding Committee Actions and Committee Statements, Correlating Notes and their respective Committee Statements, Committee Comments, Correlating Revisions, and Ballot Statements. (See *Regs* at Section 4.2.5.2 and 4.4) The First Draft Report and the Second Draft Report together constitute the Technical Committee Report. Any outstanding objection following the Second Draft Report must be raised through an appropriate Amending Motion at the Association Technical Meeting or the objection will be considered resolved. [See *Regs* at 4.4.1(b)]

**V. Step 3a: Action at Association Technical Meeting.** Following the publication of the Second Draft Report, there is a period during which those wishing to make proper Amending Motions on the Technical Committee Reports must signal their intention by submitting a Notice of Intent to Make a Motion. (See *Regs* at 4.5.2) Standards that receive notice of proper Amending Motions (Certified Amending Motions) will be presented for action at the annual June Association Technical Meeting. At the meeting, the NFPA membership can consider and act on these Certified Amending Motions as well as Follow-up Amending Motions, that is, motions that become necessary as a result of a previous successful Amending Motion. (See 4.5.3.2 through 4.5.3.6 and Table1, Columns 1-3 of *Regs* for a summary of the available Amending Motions and who may make them.) Any outstanding objection following action at an Association Technical Meeting (and any further Technical Committee consideration following successful Amending Motions, see *Regs* at 4.5.3.7 through 4.6.5.3) must be raised through an appeal to the Standards Council or it will be considered to be resolved.

**VI. Step 3b: Documents Forwarded Directly to the Council.** Where no Notice of Intent to Make a Motion (NITMAM) is received and certified in accordance with the Technical Meeting Convention Rules, the standard is forwarded directly to the Standards Council for action on issuance. Objections are deemed to be resolved for these documents. (See *Regs* at 4.5.2.5)

**VII. Step 4a: Council Appeals.** Anyone can appeal to the Standards Council concerning procedural or substantive matters related to the development, content, or issuance of any document of the Association or on matters within the purview of the authority of the Council, as established by the *Bylaws* and as determined by the Board of Directors. Such appeals must be in written form and filed with the Secretary of the Standards Council (See *Regs* at 1.6). Time constraints for filing an appeal must be in accordance with 1.6.2 of the *Regs*. Objections are deemed to be resolved if not pursued at this level.

**VIII. Step 4b: Document Issuance.** The Standards Council is the issuer of all documents (see Article 8 of *Bylaws*). The Council acts on the issuance of a document presented for action at an Association Technical Meeting within 75 days from the date of the recommendation from the Association Technical Meeting, unless this period is extended by the Council (See *Regs at* 4.7.2). For documents forwarded directly to the Standards Council, the Council acts on the issuance of the document at its next scheduled meeting, or at such other meeting as the Council may determine (See *Regs* at 4.5.2.5 and 4.7.4).

**IX. Petitions to the Board of Directors.** The Standards Council has been delegated the responsibility for the administration of the codes and standards development process and the issuance of documents. However, where extraordinary circumstances requiring the intervention of the Board of Directors exist, the Board of Directors may take any action necessary to fulfill its obligations to preserve the integrity of the codes and standards development process and to protect the interests of the Association. The rules for petitioning the Board of Directors can be found in the *Regulations Governing Petitions to the Board of Directors from Decisions of the Standards Council* and in 1.7 of the *Regs*.

**X. For More Information.** The program for the Association Technical Meeting (as well as the NFPA website as information becomes available) should be consulted for the date on which each report scheduled for consideration at the meeting will be presented. For copies of the First Draft Report and Second Draft Report as well as more information on NFPA rules and for up-to-date information on schedules and deadlines for processing NFPA documents, check the NFPA website (www.nfpa.org/aboutthecodes) or contact NFPA Codes & Standards Administration at (617) 984-7246.

Copyright 2014 National Fire Protection Association (NFPA). Licensed, by agreement, for individual use and download on October 4, 2014 to LEADER and READER for designated user PATTARAPORN SRITRAKOOL. No other reproduction or transmission in any form permitted without written permission of NFPA. For inquires or to report unauthorized use, contact licensing@nfpa.org.

# Stay Up-To-Date. Join NFPA® Today!

☑ **YES** Please enroll me as a member of NFPA for the term checked below. Activate all benefits, and ship my *Member Kit* including the *Benefits Guide* and other resources to help me make the most of my NFPA membership.

*Please allow three to four weeks for the kit to arrive.*

## Billing Information:

Name _____ Title _____

Organization _____

Address _____

City _____ State _____ Zip/Postal Code _____

Country _____

Phone _____ E-mail _____

Priority Code: 8J-MIS-1Z

## Please Answer The Following Questions:

**Job Title** *(check one)*

- ❑ Architect, Engineer, Consultant, Contractor (C17)
- ❑ Facilities Safety Officer (F14)
- ❑ Fire Chief, Other Fire Service (A11)
- ❑ Loss Control, Risk Manager (L11)
- ❑ Inspector, Building Official, Fire Marshal (F03)
- ❑ Owner, President, Manager, Administrator (C10)
- ❑ Other (please specify): (G11)_____

**Type of Organization** *(check one)*

- ❑ Architecture, Engineering, Contracting (A14)
- ❑ Commercial Firm (Office, Retail, Lodging, Restaurant) (G13)
- ❑ Electrical Services, Installation (J11)
- ❑ Fire Service, Public and Private (AA1)
- ❑ Government (C12)
- ❑ Industrial Firm (Factory, Warehouse) (C11)
- ❑ Institutional (Health Care, Education, Detention, Museums) (B11)
- ❑ Insurance, Risk Management (B12)
- ❑ Utilities (G12)
- ❑ Other (please specify): (G11)_____

## 4 Easy Ways to Join

**Fax:** 1-800-593-6372, Outside the U.S. +1-508-895-8301
**Mail:** NFPA Membership Services Center,
11 Tracy Drive, Avon, MA 02322-9908
**Online:** nfpa.org
**Call:** 1-800-344-3555
Outside the U.S. call +1-617-770-3000

05/13-D

## Terms and Payment:

- ❑ 1 year ($165)
- ❑ 2 years ($300) SAVE $30
- ❑ 3 years ($430) SAVE $65

Annual membership dues include a $45 subscription to *NFPA Journal*®. Regular membership in NFPA is individual and non-transferable. NFPA Journal is a registered trademark of the National Fire Protection Association, Quincy, MA 02169. Voting privileges begin after 180 days of individual membership. Prices subject to change.

## Payment Method:

Check One:

- ❑ Payment Enclosed *(Make check payable to NFPA.)*
- ❑ Purchase Order *(Please attach this form to your P.O.)*
- ❑ Bill Me Later *(Not available on International memberships.)*

Charge My: ❑ VISA ❑ MasterCard ❑ AmEx ❑ Discover

Card #_____

Expiration Date _____

Name on Card _____

Signature _____

International members: Please note prepayment is required on all International orders. Be sure to enclose a check or select your preferred credit card option.

### 100% Money-Back Guarantee

If anytime during your first year you decide membership is not for you, let us know and you'll receive a 100% refund of your dues.

Copyright 2014 National Fire Protection Association (NFPA). Licensed, by agreement, for individual use and download on October 4, 2014 to LEADER and READER for designated user PATTARAPORN SRITRAKOOL. No other reproduction or transmission in any form permitted without written permission of NFPA. For inquires or to report unauthorized use, contact licensing@nfpa.org.


# "Member-Only" Benefits
## Keeps You Up-To-Date!

**FREE! Technical Support** — Technical Support by Phone/Email. Get fast, reliable answers to all code-related questions—from electrical safety for employee workplaces to carbon dioxide extinguishing systems—from NFPA's team of fire protection specialists.

***NFPA Journal***® — THE journal of record for fire protection, this bi-monthly publication will keep you abreast of the latest fire prevention and safety practices, as well as new technologies and strategies for protecting life and property from fire.

***NFPA Update*** — This easy-to-read monthly e-newsletter will keep you up-to-date on important association programs such as the annual meeting; bring you times of interest from NFPA's regional offices; and alert you to nationwide events and opportunities you won't want to miss.

***NFPA News*** — From new standards for dry cleaning plants to warning equipment for household carbon monoxide, this monthly online update keeps you abreast of additions of changes that could impact how you do you work.

**NFPA Standards Directory** — The NFPA Standards Directory is your complete guide to NFPA's code-making process. Simply access your online NFPA member profile for document revision guidelines, the revision cycle schedule, and forms for submitting Proposals and Comments. Your online NFPA member profile and access to the NFPA Standards Directory is automatically generated once you join NFPA.

**FREE! Section Membership** — Share YOUR expertise with others in any of 16 industry-specific sections covering your own field of interest.

**Member Kit** — Includes Membership Certificate, Pin, Decals, ID Card, and Camera-ready Logo Art. Display the NFPA member logo proudly on your business correspondence, literature, website, and vehicles.

**10% Discounts** — Save hundreds of dollars each year on the many products and services listed in the NFPA Catalog, including codes and standards publications, handbooks, training videos, and other education materials to increase your knowledge and skills.

Voting Rights — Your chance to help shape the future direction of fire prevention codes and standards. Voting rights go into effect 180 days from the start of individual membership.

**Conference Invitation**— Invitation to the NFPA Conference and Expo. Attend this important meeting at discounted rates as a member of NFPA.

# Join NFPA today!
# www.nfpa.org

NFPA® and *NFPA Journal*® are registered trademarks of the National Fire Protection Association, Quincy, MA 02169-7471